c. 2

NACA RM A58E02

RESEARCH MEMORANDUM

WIND-TUNNEL INVESTIGATION AT MACH NUMBERS FROM 0.6 TO 1.4 OF SEVERAL EJECTED PILOT-SEAT MODELS

By James L. Summers

Ames Aeronautical Laboratory
Moffett Field, Calif.

LIBRARY COPY

SEP 10 1958

LANGLEY AERONAUTICAL LABORATORY
LIBRARY, NACA
LANGLEY FIELD, VIRGINIA

NATIONAL ADVISORY COMMITTEE
FOR AERONAUTICS

WASHINGTON

September 10, 1958

NASA Technical Library
3 1176 01435 0228

1G

NATIONAL ADVISORY COMMITTEE FOR AERONAUTICS

RESEARCH MEMORANDUM

WIND-TUNNEL INVESTIGATION AT MACH NUMBERS FROM 0.6 TO 1.4 OF SEVERAL EJECTED PILOT-SEAT MODELS

By James L. Summers

SUMMARY

The results are presented of an experimental investigation conducted to determine the static longitudinal and lateral-directional aerodynamic characteristics of basic and modified versions of a conventional upward ejected pilot-seat combination, a sled-type upward ejected pilot-seat combination, and a downward ejected pilot-seat combination. Modifications to the basic models incorporated flow deflectors for pilot protection and drag reduction and various stabilizing devices. Test Mach numbers varied from 0.6 to 1.4, angles of attack from -28° to +40°, and angles of sideslip from -16° to +12°. Reynolds numbers ranged from 0.9 million to 1.8 million based on the projected frontal height of the models.

Analysis of the results indicates that longitudinal and directional stability with possibly marginal dihedral effect can be achieved with the aid of stabilizing devices at the trim angles of attack over the Mach number range of the investigation. The results also indicate that flow deflectors can be employed to reduce the drag.

INTRODUCTION

The problem of safe pilot escape from aircraft is made difficult by high operational speeds. Conventional pilot-seat combinations are subjected to large decelerations because of their high drag when they are ejected at transonic and higher speeds. Further, loads would be imposed on the pilot's extremities as a result of the more or less violent tumbling motions of an unstabilized seat and also on portions of his body as a result of air blast. An investigation has been conducted in the Ames 2- by 2-foot transonic wind tunnel of models of three basic pilot-seat combinations considered representative of existing or proposed upward and downward ejected escape combinations. Modifications to the basic models consisted of the addition of flow deflectors and various stabilizing devices. The purpose of this report is to present the static longitudinal and lateral-directional aerodynamic characteristics of the several escape

combinations investigated. Test Mach numbers varied from 0.6 to 1.4, angles of attack from -28° to +40°, and angles of sideslip from -16° to +12°. Reynolds numbers ranged from 0.9 million to 1.8 million, based on the projected frontal height of the models.

NOTATION

Data

All force and moment coefficients are referred to the stability axis system.

C_D drag coefficient

C_L lift coefficient

C_l rolling-moment coefficient

C_m pitching-moment coefficient

C_n yawing-moment coefficient

C_Y side-force coefficient

M Mach number

R Reynolds number

α angle of attack, deg

β angle of sideslip, deg

Model Symbols

B boom

D flow deflector

F fin

H horizontal surface

S_1 conventional upward ejected pilot-seat combination

S_2 sled-type upward ejected pilot-seat combination

S_3 downward ejected pilot-seat combination

V vertical surface

i incidence of horizontal surface of model S_1, positive when trailing edge is down, deg

δ deflection of flow deflector of model S_1, positive when deflector is above horizontal reference line, deg

Subscripts

a,b designations identifying shape of bottom of seat of the S_1 combinations

APPARATUS AND MODELS

The Ames 2- by 2-foot transonic wind tunnel is a closed-circuit, variable-pressure tunnel in which the Mach number can be varied continuously to 1.4. A complete description of the wind tunnel and its air-flow characteristics is provided in reference 1.

Three basic pilot-seat combinations with and without various modifications were investigated. Drawings of the several arrangements are presented in figures 1, 2, and 3, respectively, for the models embodying the conventional upward ejected pilot-seat combination (S_1), the sled-type upward ejected pilot-seat combination (S_2), and the downward ejected pilot-seat combination (S_3). For the S_1 combinations, two variations in the shape of the bottom of the seat were tested and are identified by the subscript a or b (see fig. 1(a)). The basic S_{1a} or S_{1b} combination was modified by adding a flow deflector D_1 and horizontal and vertical surfaces H_1 and V_1, respectively (fig. 1(b)). Variations of the S_{1b} combination were produced by changing the angle of the flow deflector and the incidence of the horizontal surface. The basic S_2 combination was modified as shown in figures 2(b), 2(c), and 2(d), respectively, by adding booms alone (B_1), booms with fins swept 45° (B_2F_1), and booms with fins swept 75° (B_2F_2), in order to provide stability. No flow deflector was employed on the S_2 combinations. Modifications to the S_3 combination consisted of the additions of a flow deflector D_2, horizontal surfaces H_2 and H_3, and vertical surfaces V_2 (figs. 3(b) and 3(c)).

All models were sting supported in the wind-tunnel test section as shown in figure 4 for the $S_3D_2V_2$ model.

TESTS AND DATA REDUCTION

Lift, drag, side force, pitching moment, yawing moment, and rolling moment were measured for all models tested. The ranges of angles of attack and sideslip varied for each model investigated; however, the test limits were -28° and +40° for angle of attack and -16° and +12° for angle of sideslip. The test Reynolds numbers and Mach numbers for the various models are presented in figure 5. At some Mach numbers a variation in Reynolds number occurred and the upper and lower limits are indicated in figure 5.

All force and moment coefficients were based on the projected frontal areas of the basic models and the reference length for the moment coefficients was the projected frontal heights of the basic models. The model dimensions employed are as follows:

Combination	Reference area, sq. in.	Reference length, in.
S_1	8.42	4.62
S_2	6.07	3.46
S_3	8.90	4.85

The reference point for the moment coefficients was the center of gravity of the basic models as shown in figures 1, 2, and 3 for the S_1, S_2, and S_3 combinations, respectively. The drag coefficient as presented is the total drag coefficient (i.e., no adjustment has been made for the difference between the model base pressure and the free-stream static pressure). Angle of attack was referred to the horizontal reference line for each model. (See figs. 1, 2, and 3.)

Corrections were applied to the angles of attack and sideslip to take into account deflections of the sting support system resulting from static aerodynamic loads. Corrections have not been applied for wall interference, drag buoyancy or air-stream angularity as they are believed to be negligible for the results presented herein.

RESULTS AND DISCUSSION

General

The basic six-component data of the subject investigation are presented in tabular form for the several models as follows:

Conventional upward ejected pilot seat		Sled-type upward ejected pilot seat		Downward ejected pilot seat	
Combination	Table	Combination	Table	Combination	Table
S_{1a}	I	S_2	V	S_3	IX
$S_{1a}D_1H_1V_1$	II	S_2B_1	VI	S_3D_2	X
S_{1b}	III	$S_2B_2F_1$	VII	$S_3D_2V_2$	XI
$S_{1b}D_1H_1V_1$	IV	$S_2B_2F_2$	VIII	$S_3D_2H_2H_3V_2$	XII

The data of tables II and IV are divided into groups of various combinations of flow-deflector deflections and horizontal-surface incidences. In addition, the data of tables III through XII are divided into groups of constant Mach number.

It is to be noted that values of side-force, yawing-moment, and rolling-moment coefficient include tabulations for 0° angle of sideslip for all models. The tabulation of these additional values was necessary because of slight asymmetry of certain models with resulting increments in the lateral force and moment coefficients evident at 0° sideslip angle (e.g., see table II).

Conventional Upward Ejected Pilot-Seat Combinations

The effects of the alteration to the bottom of the seat on the longitudinal aerodynamic characteristics of either the basic or modified combinations are shown in figure 6 for 0.95 Mach number. It is seen that the removal of the wedge portion of the seat resulted in a decrease in both drag and lift coefficient at the higher angles of attack. This is to be expected since the removal of the wedge section reduces the frontal area normal to the air stream and thus the model drag and also reduces the angle of attack of the bottom surface of the seat thereby reducing the lift. No appreciable change in the pitching-moment characteristics (fig. 6) or the lateral-directional characteristics (compare the data of table I with III and table II with IV) resulted from the alteration to the seat bottom.

An examination of the data for the $S_{1b}D_1H_1V_1$ combination (table IV) indicates that the primary effect of a change in either the flow-deflector angle or the horizontal-surface incidence angle or both is a change in the angle of attack for trim. When comparisons are made at trim angle of attack, the lowest drag coefficient is exhibited by the combination having a flow-deflector angle of -32° and an incidence angle of -17°. Data for this combination were selected for comparison with similar data for the basic S_{1b} combination in figure 7. At the angle of attack for trim, the modified combination has appreciably greater longitudinal stability

and a more positive lift than does the basic S_{1b} combination at the same angle of attack with, however, a small increase in drag. Examination of the lateral-directional characteristics at 28° angle of attack (near trim angle of attack) presented in figure 7(b) indicates the modified combination to have substantial directional stability and small adverse dihedral effect.

Sled-Type Upward Ejected Pilot-Seat Combinations

The effects of adding extensible booms to the sled-type basic S_2 combination are shown in figure 8. At trim angle of attack, substantial longitudinal stability and lift with a small increase in drag are developed by the modified combination at the three test Mach numbers. The directional stability of the basic combination is substantially increased by the addition of the booms although the modified combination is slightly unstable at sideslip angles less than 4° at 0.60 Mach number (fig. 8(b)). It is observed that positive dihedral effect is provided throughout the Mach number range by both the basic and modified combinations.

The basic S_2 combination was also tested with somewhat shorter booms equipped with fins ($S_2B_2F_1$ and $S_2B_2F_2$). An examination of the tabular data (tables VII and VIII) indicates that the boom-fin arrangements provided longitudinal stability but with a fairly large variation with Mach number of the angle of attack for trim. Directional stability is also provided; however, adverse dihedral effect is apparent for both finned combinations, particularly for the combination having a fin sweepback of 45° ($S_2B_2F_1$).

Downward Ejected Pilot-Seat Combinations

The basic S_3 combination was modified by the addition, in order, of the flow deflector D_2, the vertical surface V_2, and, lastly, the horizontal surfaces H_2 and H_3. The aerodynamic data for the four combinations are presented in tables IX through XII. An examination of the data contained in tables IX and X to determine the effect of the addition of the flow deflector to the basic seat combination indicates that at angles of attack near 0°, the flow deflector provided a substantial decrease in drag for the basic seat. This is illustrated in figure 9 where the variations with Mach number of the drag coefficients of the S_3 and S_3D_2 combinations are compared for 0° angle of attack. At 1.40 Mach number, the drag of the S_3D_2 combination is seen to be about 31 percent less than that of the basic S_3 combination.

A comparison of the aerodynamic characteristics of the basic S_3 combination with those of the modified combination $S_3D_2H_2H_3V_2$ is presented in figure 10. It is noted that the modified configuration provides

longitudinal stability at trim angle of attack at 0.60 and 1.00 Mach number but not at 1.40 Mach number. In fact, at 1.40 Mach number the modified model falls just short of providing trim in the angle range tested. Furthermore, the range of angles of attack for which stability does occur, although out of trim, is small (particularly at 0.60 Mach number) in comparison to the previously discussed modified S_1 and S_2 combinations. Since the S_1 and S_3 combinations are basically similar, it seems reasonable to believe that a horizontal surface similar to that employed on the S_1 combination could provide longitudinal stability for the S_3 combination. It is observed that at or near its trim angle of attack, the $S_3D_2H_2H_3V_2$ combination provided an increase in lift and a small decrease in drag compared to the basic S_3 combination. The decrease in drag is attributed to the favorable effect of the flow deflector.

An examination of the lateral-directional characteristics in figure 10(b) indicates the $S_3D_2H_2H_3V_2$ combination to have some directional stability at 0° sideslip angle but also to have adverse dihedral effect for the three test Mach numbers.

Ames Aeronautical Laboratory
National Advisory Committee for Aeronautics
Moffett Field, Calif., May 2, 1958

REFERENCE

1. Spiegel, Joseph M., and Lawrence, Leslie F.: A Description of the Ames 2- by 2-Foot Transonic Wind Tunnel and Preliminary Evaluation of Wall Interference. NACA RM A55I21, 1956.

TABLE I.- AERODYNAMIC DATA FOR THE S_{1a} COMBINATION, M = 0.95

α, deg	β, deg	C_L	C_D	C_m	C_l	C_Y	C_n
-8.2	0	-0.243	1.138	0.037	-0.008	-0.007	-0.003
-4.2	0	-.256	1.081	.028	-.002	.037	-.010
-.1	0	-.267	1.048	.025	-.006	.012	-.005
3.9	0	-.281	1.030	.018	-.010	-.001	.002
7.9	0	-.299	1.004	.005	-.011	.005	.009
7.8	0	-.313	1.009	.000	-.015	.005	-.002
11.8	0	-.316	.946	-.001	-.019	-.015	.010
15.9	0	-.276	.882	-.008	-.015	.011	.006
19.9	0	-.206	.841	-.019	-.010	.018	.011
24.0	0	-.138	.833	-.031	-.004	.017	.012
23.9	0	-.143	.819	-.018	-.009	.016	.000
28.0	0	-.090	.829	-.017	-.005	.024	-.001
32.0	0	-.050	.844	-.018	-.005	.025	.001
36.1	0	-.019	.842	-.008	-.005	.022	.005
40.2	0	.016	.859	-.006	-.004	.021	.004
-8.2	4.0	-.246	1.136	.040	-.003	-.051	-.009
-4.2	4.0	-.260	1.086	.030	-.001	-.049	-.007
-.2	4.0	-.270	1.049	.026	-.004	-.061	-.001
3.9	4.0	-.279	1.022	.016	-.004	-.057	-.001
7.9	4.0	-.290	.991	.002	.000	-.054	.003
7.8	3.8	-.299	1.007	.000	-.001	-.032	-.007
11.8	3.8	-.297	.941	-.007	-.002	-.046	.005
15.9	3.8	-.269	.892	-.014	-.001	-.083	.013
19.9	3.8	-.199	.848	-.022	.005	-.114	.007
24.0	3.8	-.140	.839	-.031	.009	-.125	.004
23.9	3.4	-.145	.837	-.025	.004	-.112	.003
28.0	3.4	-.095	.837	-.018	.008	-.092	-.002
32.0	3.4	-.049	.843	-.026	.010	-.071	-.011
36.1	3.4	-.013	.845	-.017	.012	-.066	-.010
40.2	3.4	.026	.845	-.013	.014	-.073	-.005
-8.2	8.0	-.221	1.122	.035	-.001	-.143	-.015
-4.2	8.0	-.236	1.072	.031	-.003	-.153	-.010
-.1	8.0	-.241	1.043	.026	-.000	-.152	-.008
3.9	8.0	-.251	1.028	.017	.005	-.157	-.008
7.9	8.0	-.267	1.004	.005	.009	-.162	-.008
7.9	7.7	-.276	1.012	.002	.008	-.130	-.012
11.9	7.7	-.276	.947	-.007	.010	-.111	-.011
16.0	7.7	-.262	.895	-.009	.007	-.161	.001
20.0	7.8	-.201	.864	-.020	.013	-.226	.003
24.1	7.8	-.146	.854	-.021	.017	-.258	.004
24.1	6.9	-.158	.851	-.022	.015	-.209	-.036
28.2	6.9	-.106	.856	-.019	.019	-.224	-.007
32.2	6.9	-.062	.855	-.031	.024	-.196	-.012
36.3	6.9	-.020	.849	-.016	.026	-.196	-.016
40.4	6.9	.021	.854	-.008	.026	-.200	-.011

TABLE II.- AERODYNAMIC DATA FOR THE $S_{1a}D_1H_1V_1$ COMBINATION, M = 0.95

α, deg	β, deg	C_L	C_D	C_m	C_l	C_Y	C_n
δ = -17°, i = -16°							
-8.3	0	-0.378	1.341	0.127	0.000	0.033	-0.014
-4.2	0	-.387	1.264	.106	-.001	.036	-.016
-.2	0	-.408	1.181	.095	.001	.044	-.020
3.9	0	-.442	1.101	.112	-.003	.035	-.009
7.9	0	-.446	.955	.141	.003	.058	.001
7.8	0	-.396	.955	.121	-.002	.059	-.007
11.9	0	-.295	.830	.120	-.006	.060	-.016
16.0	0	-.129	.758	.067	-.003	.061	-.017
20.1	0	-.028	.788	.024	-.002	.056	-.014
24.1	0	.057	.858	-.015	.000	.064	-.009
24.0	0	.075	.884	-.021	.001	.054	-.014
28.1	0	.154	.909	-.030	-.002	.042	-.005
32.2	0	.228	.930	-.032	-.005	.035	.001
36.3	0	.282	.975	-.037	-.005	.021	.011
40.3	0	.347	1.019	-.038	-.003	.028	.007
-8.3	4.0	-.391	1.376	.134	.029	-.130	-.009
-4.2	4.0	-.407	1.318	.115	.030	-.147	-.004
-.2	4.1	-.436	1.216	.109	.027	-.195	.010
3.8	4.1	-.439	1.123	.103	.033	-.203	.009
7.9	4.1	-.417	1.017	.119	.028	-.274	.022
7.8	3.9	-.387	1.019	.109	.027	-.268	.017
11.9	3.9	-.263	.910	.103	.019	-.314	.023
16.0	3.9	-.162	.856	.073	.015	-.309	.048
20.1	3.9	-.063	.874	.038	.017	-.278	.020
24.1	3.9	.025	.905	.009	.025	-.291	.028
24.0	3.5	.046	.923	-.004	.022	-.294	.029
28.1	3.5	.127	.932	-.015	.024	-.276	.030
32.2	3.5	.203	.964	-.030	.030	-.281	.022
36.3	3.5	.258	.996	-.023	.028	-.288	.025
40.4	3.5	.322	1.049	-.026	.025	-.289	.030
-8.3	8.1	-.376	1.380	.147	.042	-.394	.016
-4.2	8.1	-.406	1.309	.127	.050	-.402	.015
-.2	8.2	-.441	1.208	.117	.043	-.456	.027
3.8	8.2	-.431	1.135	.107	.049	-.456	.020
7.9	8.2	-.344	1.050	.104	.050	-.480	.028
7.9	7.9	-.341	1.081	.086	.051	-.476	.017
12.0	7.9	-.285	.998	.095	.039	-.546	.038
16.1	7.9	-.233	.960	.075	.029	-.595	.052
20.1	7.9	-.127	.977	.043	.029	-.603	.061
24.2	7.9	-.031	.989	.012	.052	-.582	.047
24.2	7.1	-.033	1.008	.013	.049	-.596	.038
28.3	7.1	.061	1.004	-.011	.053	-.604	.040
32.4	7.1	.139	1.006	-.023	.055	-.607	.032
36.5	7.1	.212	1.029	-.022	.048	-.595	.025
40.5	7.0	.290	1.055	-.025	.043	-.581	.035

TABLE II - AERODYNAMIC DATA FOR THE $S_{1a}D_1H_1V_1$ COMBINATION, M = 0.95 - Concluded

α, deg	β, deg	C_L	C_D	C_m	C_l	C_Y	C_n
δ = 5°, i = -16°							
-8.3	0	-0.523	1.226	0.201	0.000	0.044	-0.010
-4.2	0	-.517	1.136	.189	-.001	.040	-.013
-.2	0	-.505	1.078	.130	-.005	.037	-.010
3.8	0	-.511	1.063	.108	-.001	.029	-.006
7.9	0	-.485	1.030	.084	.002	.039	-.008
7.7	0	-.473	1.053	.088	.001	.048	-.015
11.8	0	-.446	.997	.070	.005	.063	-.018
15.9	0	-.338	.964	.057	.000	.065	-.019
20.0	0	-.212	.959	.034	-.002	.048	-.006
24.1	0	-.083	.956	.012	-.002	.048	-.001
24.0	0	-.047	.952	.010	-.004	.036	-.012
28.1	0	.018	1.008	-.003	-.004	.037	-.006
32.2	0	.122	1.029	-.015	-.006	.048	-.004
36.3	0	.248	1.035	-.019	-.006	.041	.000
40.3	0	.305	1.068	-.018	-.003	.035	.005
δ = -32°, i = -16°							
-8.3	0	-0.362	1.317	0.127	0.008	0.052	-0.016
-4.2	0	-.345	1.249	.105	.011	.067	-.018
-.2	0	-.356	1.188	.088	.006	.041	-.020
3.9	0	-.426	1.155	.092	-.004	.019	-.015
7.9	0	-.470	1.109	.088	.000	.040	-.012
7.7	0	-.445	1.103	.080	-.001	.042	-.019
11.8	0	-.430	1.050	.060	-.003	.040	-.008
15.9	0	-.367	.995	.056	-.001	.052	-.012
20.0	0	-.265	.897	.063	.002	.051	-.012
24.1	0	-.056	.809	.053	.003	.071	-.010
24.0	0	-.038	.794	.058	.003	.049	-.014
28.1	0	.176	.828	.004	.001	.032	-.005
32.2	0	.292	.889	-.023	-.001	.041	-.008
36.3	0	.358	.913	-.037	.002	.048	-.007
40.4	0	.409	.965	-.040	.005	.041	-.002
δ = -17°, i = -31°							
-8.3	0	-0.446	1.495	0.166	-0.001	0.028	-0.016
-4.2	0	-.450	1.424	.147	-.004	.018	-.009
-.2	0	-.465	1.307	.138	-.004	.020	-.014
3.8	0	-.500	1.211	.157	-.002	.035	-.014
7.9	0	-.536	1.080	.181	-.002	.046	-.008
7.8	0	-.508	1.084	.177	-.005	.041	-.011
11.9	0	-.419	.943	.183	-.009	.028	-.001
16.0	0	-.269	.866	.126	-.009	.034	-.009
20.0	0	-.195	.852	.079	-.006	.036	-.005
24.1	0	-.164	.888	.058	-.004	.051	-.009
24.0	0	-.136	.904	.062	-.002	.036	-.009
28.0	0	-.063	.915	.052	-.003	.033	-.007
32.1	0	.061	.895	.028	-.003	.032	.001
36.2	0	.165	.917	.017	-.002	.018	.014
40.3	0	.273	.948	-.002	-.002	.031	.007

TABLE III.- AERODYNAMIC DATA FOR THE S_{1b} COMBINATION

α, deg	β, deg	C_L	C_D	C_m	C_l	C_Y	C_n
M = 0.80							
13.9	0	-0.256	0.810	-0.014	-0.010	0.006	0.006
15.9	0	-.208	.780	-.023	-.006	.012	.010
18.9	0	-.225	.733	-.039	-.005	.013	.013
21.9	0	-.232	.677	-.049	-.002	.023	.009
23.9	0	-.210	.635	-.049	-.001	.022	.005
23.9	0	-.223	.632	-.043	-.003	.020	-.001
27.9	0	-.153	.601	-.033	.000	.034	-.004
32.0	0	-.081	.590	-.043	.000	.037	-.003
36.0	0	-.033	.588	-.027	-.001	.030	.000
40.1	0	.000	.596	-.011	-.002	.046	-.003
13.9	3.8	-.238	.796	-.016	-.002	-.068	.001
15.9	3.8	-.244	.762	-.031	.002	-.076	.001
18.9	3.8	-.249	.690	-.046	.005	-.098	.001
21.9	3.8	-.221	.649	-.050	.004	-.103	-.005
23.9	3.8	-.200	.631	-.053	.003	-.089	-.008
23.9	3.4	-.227	.639	-.045	.005	-.093	.001
27.9	3.4	-.159	.617	-.043	.006	-.070	-.001
32.0	3.4	-.091	.611	-.040	.008	-.064	-.002
36.0	3.4	-.035	.596	-.025	.011	-.054	-.011
40.1	3.4	.007	.600	-.015	.013	-.051	-.011
16.0	7.7	-.289	.777	-.033	.017	-.151	-.011
22.0	7.8	-.244	.683	-.044	.016	-.200	-.008
24.0	7.8	-.215	.664	-.041	.015	-.205	-.004
24.1	6.9	-.245	.662	-.034	.013	-.197	-.010
28.1	6.9	-.172	.632	-.038	.018	-.178	-.011
40.3	6.9	.006	.601	-.015	.029	-.157	-.026
M = 0.95							
13.8	0	-0.319	0.946	-0.015	-0.013	0.005	0.009
15.9	0	-.270	.906	-.005	-.011	.012	.011
18.9	0	-.282	.854	-.011	-.009	.019	.003
21.9	0	-.299	.785	-.033	-.006	.017	.007
23.9	0	-.276	.747	-.031	-.005	.026	.001
23.8	0	-.296	.739	-.025	-.008	.017	.000
27.9	0	-.214	.696	-.024	-.006	.028	-.005
32.0	0	-.132	.691	-.024	-.006	.035	-.006
36.0	0	-.077	.706	-.015	-.006	.034	-.002
40.1	0	-.042	.706	-.004	-.005	.033	.000
13.8	3.8	-.305	.925	-.016	-.001	-.076	.001
15.8	3.8	-.324	.895	-.023	.000	-.084	.000
18.8	3.8	-.349	.835	-.028	.002	-.105	-.004
21.9	3.8	-.310	.782	-.026	.003	-.111	-.004
23.9	3.8	-.279	.761	-.037	.004	-.105	-.007
23.8	3.4	-.302	.744	-.031	.002	-.095	-.003
27.9	3.4	-.221	.699	-.029	.005	-.083	.000
32.0	3.4	-.140	.697	-.025	.007	-.072	-.003
36.0	3.4	-.080	.704	-.015	.010	-.066	-.008
40.1	3.4	-.037	.701	.001	.012	-.067	-.008
15.9	7.8	-.366	.919	-.022	.017	-.181	-.008
22.0	7.8	-.330	.806	-.020	.016	-.219	-.012
24.0	7.8	-.294	.788	-.027	.017	-.225	-.009
24.0	6.9	-.320	.778	-.027	.013	-.213	-.007
28.1	6.9	-.236	.736	-.020	.017	-.212	-.005
40.3	6.9	-.038	.710	.000	.028	-.191	-.021

TABLE III.- AERODYNAMIC DATA FOR THE S_{1b} COMBINATION - Concluded

α, deg	β, deg	C_L	C_D	C_m	C_l	C_Y	C_n
M = 1.35							
13.8	0	-0.327	1.105	-0.002	-0.007	0.008	0.001
15.8	0	-.307	1.068	-.008	-.006	.004	.004
18.9	0	-.276	1.027	-.016	-.005	.000	.004
21.9	0	-.237	.978	-.023	-.004	.002	.004
24.0	0	-.217	.952	-.028	-.003	.002	.006
23.8	0	-.229	.936	-.025	-.008	-.004	.003
27.9	0	-.188	.906	-.026	-.007	.001	.002
32.0	0	-.140	.897	-.030	-.005	.012	-.005
36.1	0	-.085	.893	-.029	-.003	.013	-.002
40.1	0	-.037	.890	-.029	-.003	.013	.001
13.8	3.8	-.320	1.103	-.011	-.004	-.108	-.002
15.8	3.8	-.306	1.069	-.011	-.004	-.120	-.004
18.9	3.9	-.273	1.017	-.017	-.004	-.137	.003
21.9	3.9	-.244	.975	-.017	-.003	-.140	.008
24.0	3.8	-.222	.959	-.023	.000	-.136	.011
23.8	3.4	-.233	.945	-.026	-.003	-.116	.013
27.9	3.4	-.193	.912	-.022	-.001	-.114	.016
32.0	3.4	-.133	.890	-.036	.006	-.095	.009
36.1	3.4	-.081	.881	-.033	.008	-.104	.016
40.1	3.4	-.038	.887	-.029	.010	-.106	.019
15.9	7.8	-.304	1.084	-.008	.009	-.246	-.005
22.0	7.8	-.255	.986	-.007	.010	-.270	.002
24.1	7.8	-.233	.971	-.013	.013	-.272	.003
24.0	6.9	-.250	.955	-.016	.011	-.240	-.006
28.1	6.9	-.204	.922	-.017	.014	-.239	-.004
40.3	6.9	-.046	.887	-.023	.023	-.238	-.002

TABLE IV.- AERODYNAMIC DATA FOR THE $S_{1b}D_1H_1V_1$ COMBINATION

α, deg	β, deg	C_L	C_D	C_m	C_l	C_Y	C_n
δ = -17°, i = -17°, M = 0.80							
13.9	0	-0.408	0.673	0.071	-0.008	0.070	-0.020
17.9	0	-.280	.676	.024	-.010	.055	-.014
22.0	0	-.183	.696	-.012	-.012	.057	-.009
24.0	0	-.123	.715	-.039	-.012	.055	-.010
23.9	0	-.142	.688	-.017	-.011	.050	-.013
28.0	0	-.011	.711	-.037	-.012	.029	.001
32.1	0	.095	.715	-.037	-.010	.038	.003
17.9	3.9	-.291	.735	.037	.017	-.215	.015
22.0	3.9	-.195	.745	.001	.018	-.206	.002
24.0	3.9	-.140	.741	-.016	.016	-.215	.000
18.0	7.9	-.318	.837	.030	.032	-.483	.020
22.1	7.9	-.214	.815	.002	.044	-.483	.013
24.1	7.9	-.157	.815	-.016	.054	-.488	.001
δ = -17°, i = -17°, M = 0.95							
13.8	0	-0.459	0.800	0.103	-0.008	0.071	-0.022
17.9	0	-.306	.790	.045	-.008	.051	-.013
22.0	0	-.209	.809	.001	-.011	.064	-.010
24.0	0	-.157	.834	-.020	-.010	.064	-.008
23.9	0	-.175	.808	-.007	-.010	.051	-.013
28.0	0	-.050	.824	-.026	-.011	.039	-.012
32.1	0	.075	.818	-.030	-.009	.045	.001
17.9	3.9	-.317	.876	.054	.010	-.281	.033
22.0	3.9	-.240	.868	.026	.015	-.265	.019
24.0	3.9	-.184	.870	.002	.015	-.277	.015
18.0	7.9	-.358	.976	.058	.021	-.588	.052
22.1	7.9	-.273	.963	.025	.041	-.577	.042
24.1	7.9	-.235	.959	.009	.051	-.567	.029
δ = -17°, i = -17°, M = 1.35							
13.9	0	-0.370	0.936	0.147	-0.009	0.027	-0.015
18.0	0	-.218	.914	.073	-.012	.014	-.007
22.0	0	-.145	.931	.014	-.006	.021	-.006
24.0	0	-.146	.951	.014	-.003	.030	-.003
23.9	0	-.154	.947	.017	-.006	.019	-.008
28.0	0	-.111	.999	.010	-.006	.016	-.004
32.1	0	-.014	1.006	-.011	-.007	.016	-.001
18.0	3.9	-.236	.946	.074	.006	-.264	.038
22.0	3.9	-.175	.969	.026	.009	-.256	.028
24.0	3.9	-.172	.987	.025	.007	-.252	.029
18.0	7.9	-.278	1.056	.074	.020	-.561	.073
22.1	7.9	-.216	1.053	.036	.038	-.524	.058
24.1	7.9	-.197	1.047	.029	.041	-.517	.059

TABLE IV.- AERODYNAMIC DATA FOR THE $S_{1b}D_1H_1V_1$ COMBINATION - Continued

α, deg	β, deg	C_L	C_D	C_m	C_l	C_Y	C_n
δ = -32°, i = -17°, M = 0.80							
23.9	0	-0.221	0.644	0.057	-0.001	0.055	-0.013
28.0	0	.026	.609	.013	-.003	.041	-.013
32.1	0	.177	.659	-.027	-.003	.049	-.012
36.2	0	.266	.696	-.037	.000	.058	-.010
23.9	3.5	-.211	.704	.047	.015	-.256	.027
28.0	3.5	-.005	.678	.007	.015	-.241	.030
32.1	3.5	.140	.694	-.015	.024	-.210	.017
36.2	3.5	.248	.724	-.027	.031	-.226	.016
28.2	7.0	-.070	.744	.007	.045	-.514	.039
δ = -32°, i = -17°, M = 0.95							
23.9	0	-0.249	0.775	0.067	-0.002	0.052	-0.012
28.0	0	.004	.725	.013	-.001	.044	-.014
32.2	0	.159	.765	-.022	-.002	.043	-.011
36.2	0	.256	.796	-.028	.001	.054	-.009
23.9	3.5	-.232	.818	.058	.012	-.306	.038
28.0	3.5	-.032	.787	.020	.012	-.281	.047
32.1	3.5	.114	.787	.000	.024	-.250	.028
36.2	3.5	.229	.819	-.013	.030	-.266	.025
28.2	7.0	-.124	.874	.039	.045	-.594	.059
δ = -32°, i = -17°, M = 1.35							
23.9	0	-0.220	0.888	0.092	-0.003	0.008	-0.002
28.1	0	-.048	.835	.057	.001	.005	-.002
32.2	0	.120	.861	.013	.002	.003	.002
36.3	0	.220	.918	-.001	.007	.003	-.001
23.9	3.5	-.224	.893	.094	.011	-.290	.048
28.0	3.5	-.067	.867	.062	.012	-.266	.052
32.2	3.5	.092	.862	.022	.024	-.253	.046
36.3	3.5	.206	.912	.006	.028	-.234	.035
28.2	7.0	-.101	.944	.055	.046	-.561	.062

TABLE IV.- AERODYNAMIC DATA FOR THE $S_{1b}D_1H_1V_1$ COMBINATION - Concluded

α, deg	β, deg	C_L	C_D	C_m	C_l	C_Y	C_n
δ = 5°, i = -16°, M = 0.80							
15.9	0	-0.346	0.851	0.045	0.000	0.060	-0.011
19.9	0	-.363	.831	.022	-.007	.058	-.011
24.0	0	-.273	.814	.009	-.008	.052	-.007
23.9	0	-.229	.785	.011	-.008	.038	-.014
28.0	0	-.144	.787	.006	-.007	.034	-.005
32.1	0	.027	.777	-.025	-.004	.030	-.001
36.1	0	.134	.798	-.019	-.002	.037	.001
δ = 5°, i = -16°, M = 0.95							
15.8	0	-0.483	0.992	0.051	0.000	0.051	-0.017
19.8	0	-.443	.967	.036	-.006	.049	-.013
23.9	0	-.361	.943	.031	-.007	.047	-.009
23.8	0	-.320	.913	.020	-.008	.027	-.006
27.9	0	-.215	.925	.018	-.008	.028	.003
32.0	0	-.074	.947	-.006	-.004	.031	.002
36.2	0	.107	.917	-.016	-.002	.034	.005
δ = 5°, i = -16°, M = 1.35							
15.8	0	-0.396	1.208	0.056	0.000	0.017	-0.008
19.9	0	-.355	1.159	.054	-.001	.016	-.004
24.0	0	-.268	1.131	.023	-.003	.016	-.002
23.8	0	-.268	1.150	.024	-.009	.001	-.001
27.9	0	-.170	1.125	-.003	-.006	.009	.000
32.1	0	-.059	1.143	-.026	-.003	.013	.006
36.2	0	.053	1.155	-.030	.001	.004	.007
δ = -17°, i = -31°, M = 0.80							
28.0	0	-0.189	0.731	0.029	-0.004	0.034	-0.004
32.0	0	-.052	.726	.004	-.001	.035	.006
36.1	0	.069	.734	.009	.001	.030	.011
40.2	0	.186	.753	.008	.003	.053	.011
δ = -17°, i = -31°, M = 0.95							
27.9	0	-0.243	0.852	0.049	-0.002	0.037	-0.005
32.0	0	-.088	.828	.018	-.001	.040	.002
36.1	0	.043	.837	.013	.001	.038	.010
40.2	0	.140	1.012	-.007	.002	.047	.009
δ = -17°, i = -31°, M = 1.35							
27.9	0	-0.279	0.998	0.075	-0.002	0.020	-0.008
32.0	0	-.163	.995	.046	-.001	.020	-.003
36.1	0	-.016	.997	.018	.000	.021	-.001
40.3	0	.112	1.015	.011	.005	.022	.005

TABLE V.- AERODYNAMIC DATA FOR THE S_2 COMBINATION

α, deg	β, deg	C_L	C_D	C_m	C_l	C_Y	C_n
M = 0.60							
-6.1	0	-0.164	0.440	0.078	0.000	0.000	0.006
-2.0	0	-.112	.445	.092	.000	.003	.003
2.1	0	-.059	.461	.107	.000	.012	.004
6.2	0	.007	.489	.123	.000	-.001	.005
10.3	0	.072	.521	.133	.004	.007	.008
14.4	0	.142	.563	.144	.010	.016	.011
18.5	0	.204	.605	.145	.012	.014	.009
22.6	0	.269	.659	.137	.012	.015	.005
-6.0	3.9	-.051	.509	.072	.015	-.030	.052
2.1	4.2	-.031	.487	.108	-.008	-.184	-.017
10.3	4.2	.071	.537	.134	-.026	-.204	-.046
18.5	4.2	.216	.627	.151	-.027	-.207	-.042
-6.0	8.1	-.013	.558	.075	.008	-.146	.011
2.2	8.0	.074	.596	.099	.011	-.079	.030
10.4	8.0	.154	.649	.134	.000	-.069	.009
18.6	8.2	.262	.704	.159	-.054	-.229	-.050
-6.0	12.2	-.002	.597	.076	.003	-.254	.012
2.2	12.1	.094	.650	.092	.000	-.148	.007
10.5	12.1	.220	.708	.130	-.024	-.143	-.022
18.7	12.2	.363	.779	.158	-.076	-.308	-.067
M = 0.95							
-5.7	0	0.026	0.798	0.140	0.004	0.019	0.007
-1.9	0	-.157	.777	.158	.002	.010	.006
2.3	0	-.124	.799	.175	.002	.013	.006
6.5	0	-.073	.820	.191	.003	.015	.004
10.7	0	-.016	.834	.199	.002	.014	.001
14.9	0	.075	.886	.201	.007	.000	.000
19.1	.1	.176	.936	.189	.007	-.052	-.009
23.4	.2	.301	1.018	.178	.001	-.073	-.020
-5.8	4.3	-.025	.788	.140	-.007	-.164	-.038
2.3	4.4	-.104	.803	.174	-.021	-.218	-.037
10.8	4.3	.049	.883	.201	-.023	-.158	-.027
19.2	4.1	.211	.973	.180	-.025	-.119	-.022
-5.8	8.2	.033	.799	.111	.000	-.146	.011
2.4	8.2	-.003	.854	.147	-.007	-.139	-.001
10.8	8.1	.075	.878	.165	-.007	-.131	.005
19.3	8.3	.276	1.008	.185	-.044	-.248	-.025
-6.0	12.4	-.086	.828	.116	-.007	-.237	-.025
2.5	12.4	.052	.881	.142	-.018	-.234	-.029
11.1	12.7	.243	.994	.184	-.073	-.420	-.082
19.5	12.5	.347	1.049	.191	-.073	-.420	-.056

TABLE V.- AERODYNAMIC DATA FOR THE S_2 COMBINATION - Concluded

α, deg	β, deg	C_L	C_D	C_m	C_l	C_Y	C_n
M = 1.35							
-5.7	0	-0.036	1.062	0.194	0.000	0.001	0.005
-1.5	0	.022	1.081	.202	.003	.015	.004
2.7	0	.079	1.121	.208	.004	.015	.003
6.9	0	.146	1.164	.210	.004	.009	.002
11.1	0	.218	1.213	.205	.006	.015	.002
15.3	0	.291	1.277	.193	.007	.007	.003
19.5	0	.370	1.336	.179	.009	-.002	.002
23.6	0	.353	1.362	.146	.009	-.010	.000
-5.7	4.4	-.027	1.066	.189	-.016	-.248	-.019
2.7	4.4	.102	1.127	.212	-.013	-.240	-.020
11.1	4.3	.242	1.221	.204	-.008	-.214	-.020
19.6	4.3	.390	1.345	.180	-.011	-.211	-.021
-5.7	8.8	.002	1.068	.189	-.029	-.481	-.051
2.8	8.7	.138	1.139	.207	-.029	-.462	-.048
11.2	8.7	.276	1.240	.204	-.026	-.452	-.044
19.6	8.5	.404	1.343	.180	-.039	-.424	-.046
-5.7	13.0	.042	1.087	.181	-.040	-.649	-.078
2.7	12.8	.164	1.141	.197	-.044	-.650	-.074
11.0	12.8	.298	1.230	.197	-.050	-.649	-.073
19.3	12.6	.421	1.342	.178	-.068	-.628	-.068

TABLE VI.- AERODYNAMIC DATA FOR THE S_2B_1 COMBINATION

α, deg	β, deg	C_L	C_D	C_m	C_l	C_Y	C_n
M = 0.60							
-6.1	0	-0.173	0.436	0.089	-0.002	-0.002	0.002
-2.0	0	-.101	.445	.082	-.001	-.002	.001
2.1	0	-.024	.470	.075	.000	.002	.003
6.2	0	.057	.499	.074	.001	.004	.004
10.3	0	.146	.547	.066	.003	-.005	.006
14.4	0	.235	.600	.053	.010	.017	.009
18.4	0	.331	.661	.003	.012	.016	.006
20.5	0	.393	.702	-.031	.013	.022	.004
24.5	0	.499	.790	-.104	.009	.024	.000
18.4	4.2	.351	.672	-.002	-.005	-.239	-.008
14.4	8.0	.301	.719	.030	.015	-.134	.055
18.5	8.2	.408	.751	-.008	-.020	-.308	.017
20.5	8.1	.461	.796	-.038	-.020	-.306	.024
22.5	8.1	.508	.841	-.077	.000	-.392	.078
18.6	12.2	.472	.824	-.022	-.028	-.423	.037
M = 0.95							
-5.7	0	0.015	0.790	0.152	0.003	0.019	0.006
-1.9	0	-.197	.781	.167	.002	.017	.003
2.2	0	-.146	.791	.157	.002	.012	.005
6.4	0	-.064	.815	.144	.002	.017	.002
10.6	0	.034	.855	.131	.001	.016	-.001
14.8	0	.128	.898	.107	.004	.006	-.001
18.9	.1	.257	.974	.046	.007	-.032	-.005
21.0	.1	.334	1.020	.004	.008	-.067	-.010
25.1	.2	.490	1.124	-.077	.000	-.067	-.024
18.9	4.1	.294	1.008	.026	-.018	-.115	-.001
14.9	8.3	.275	1.002	.076	-.028	-.271	.012
19.1	8.2	.376	1.067	.024	-.023	-.281	.025
21.1	8.2	.429	1.082	-.002	-.015	-.295	.038
23.2	8.2	.505	1.141	-.045	-.015	-.303	.039
19.1	12.4	.431	1.095	.012	-.025	-.478	.040
M = 1.35							
-5.7	0	-0.048	1.063	0.205	0.001	0.001	0.005
-1.5	0	.021	1.082	.199	.003	.016	.005
2.7	0	.094	1.123	.185	.004	.018	.003
6.8	0	.179	1.175	.162	.004	.007	.001
11.1	0	.269	1.237	.145	.006	.013	.001
17.2	0	.443	1.351	.032	.009	.005	.002
19.3	0	.499	1.402	-.008	.009	.002	.001
21.3	0	.556	1.454	-.051	.007	.001	-.002
25.4	0	.685	1.561	-.166	.009	-.003	-.003
19.3	4.2	.526	1.413	-.005	.005	-.237	.011
15.2	8.5	.459	1.334	.038	.000	-.505	.036
19.3	8.5	.561	1.407	-.028	.003	-.493	.042
21.3	8.4	.613	1.454	-.077	.001	-.490	.041
23.3	8.4	.670	1.510	-.137	.002	-.480	.044
19.2	12.6	.586	1.412	-.047	-.008	-.733	.061

TABLE VII.- AERODYNAMIC DATA FOR THE $S_2B_2F_1$ COMBINATION

α, deg	β, deg	C_L	C_D	C_m	C_l	C_Y	C_n
M = 0.60							
-6.0	0	-0.190	0.450	0.129	-0.001	0.005	-0.002
-2.0	0	-.093	.457	.071	-.001	-.003	-.001
2.0	0	.010	.479	.006	-.001	.006	.000
6.1	0	.120	.516	-.054	.000	.009	.002
10.1	0	.217	.566	-.087	.002	.011	.005
14.2	0	.309	.628	-.110	.007	.027	.008
20.3	0	.451	.731	-.187	.008	.031	.002
24.3	0	.557	.827	-.262	.005	.025	.000
-5.9	3.9	-.077	.514	.119	.028	-.059	.104
-2.0	3.9	-.020	.523	.070	.030	-.085	.093
2.1	4.1	.034	.510	.007	.019	-.224	.051
6.1	4.2	.112	.525	-.046	.005	-.261	.016
-5.9	7.9	-.014	.585	.150	.036	-.153	.146
-1.8	8.0	.080	.590	.111	.025	-.197	.119
2.1	8.1	.061	.566	.009	.041	-.263	.095
6.2	8.0	.243	.641	.000	.025	-.138	.080
-5.9	12.0	-.005	.631	.143	.036	-.247	.159
-1.8	12.1	.108	.630	.131	.025	-.298	.119
2.2	12.0	.136	.658	.039	.048	-.228	.130
6.2	12.0	.211	.689	-.021	.051	-.226	.119
M = 0.95							
-5.6	0	-0.002	0.794	0.188	0.003	0.019	0.004
-1.9	0	-.149	.791	.156	.001	.012	.001
2.1	0	-.123	.794	.099	.001	.014	.003
6.2	0	.000	.835	.015	.001	.016	.002
10.3	0	.101	.872	-.029	.001	.018	.000
14.4	0	.210	.936	-.075	.002	.013	.000
20.6	.1	.415	1.067	-.184	.006	-.057	-.008
24.7	.2	.568	1.168	-.266	.004	-.071	-.015
2.1	4.3	-.078	.811	.090	.012	-.253	.044
6.3	4.3	.054	.861	.035	.003	-.227	.023
10.3	4.2	.159	.906	-.036	-.011	-.180	-.006
14.5	4.2	.267	.972	-.091	-.007	-.158	-.002
2.3	8.1	.030	.866	.100	.019	-.196	.084
6.3	8.1	.091	.871	.022	.028	-.180	.080
10.3	8.1	.188	.908	-.061	.026	-.182	.068
14.6	8.3	.363	1.023	-.116	-.032	-.268	-.003
2.3	12.2	.072	.891	.092	.036	-.315	.113
6.5	12.4	.221	.950	.035	.015	-.410	.071
10.7	12.6	.348	1.031	-.030	-.014	-.485	.023
14.8	12.5	.440	1.074	-.105	-.025	-.478	.013

TABLE VII.- AERODYNAMIC DATA FOR THE $S_2B_2F_1$ COMBINATION - Concluded

α, deg	β, deg	C_L	C_D	C_m	C_l	C_Y	C_n
M = 1.35							
-5.7	0	-0.059	1.067	0.232	0.002	0.000	0.006
-1.6	0	.031	1.092	.180	.004	.016	.005
2.5	0	.136	1.141	.097	.002	.020	-.001
6.6	0	.238	1.194	.032	.003	.010	.000
10.7	0	.342	1.255	-.022	.004	.019	-.002
14.8	0	.470	1.343	-.119	.008	.009	.006
20.9	0	.667	1.501	-.290	.008	.007	.001
24.9	0	.796	1.629	-.418	.005	.006	-.005
2.5	4.3	.159	1.142	.094	.018	-.270	.052
6.6	4.2	.253	1.194	.041	.023	-.269	.053
10.7	4.3	.355	1.256	-.020	.023	-.252	.039
14.8	4.3	.490	1.343	-.120	.015	-.244	.025
2.5	8.6	.191	1.149	.096	.017	-.520	.067
6.6	8.6	.289	1.214	.043	.028	-.537	.077
10.8	8.5	.399	1.269	-.025	.035	-.534	.081
14.8	8.5	.542	1.354	-.148	.020	-.518	.057
2.7	12.8	.213	1.159	.133	.010	-.758	.085
6.7	12.9	.298	1.202	.079	.020	-.764	.075
10.8	12.9	.434	1.279	-.018	.025	-.780	.071
14.9	12.8	.547	1.353	-.119	.021	-.759	.068

TABLE VIII.- AERODYNAMIC DATA FOR THE $S_2B_2F_2$ COMBINATION

α, deg	β, deg	C_L	C_D	C_m	C_l	C_Y	C_n
M = 0.60							
-6.0	0	-0.184	0.444	0.115	-0.001	-0.002	0.001
-2.0	0	-.097	.450	.089	.000	-.006	.003
2.1	0	-.008	.474	.057	.000	.000	.005
6.1	0	.090	.509	.026	.002	.009	.006
10.2	0	.186	.557	-.001	.002	.002	.002
14.3	0	.281	.612	-.035	.006	.022	.002
18.3	0	.377	.680	-.082	.007	.021	-.004
6.1	4.2	.087	.523	.022	-.001	-.258	.005
10.2	4.2	.180	.565	-.002	-.002	-.244	-.004
14.3	4.2	.275	.622	-.035	-.003	-.249	-.012
18.3	4.2	.394	.691	-.085	-.004	-.250	-.016
10.4	8.1	.288	.682	.031	.006	-.170	.043
14.4	8.1	.363	.736	-.016	.007	-.190	.040
18.4	8.1	.450	.779	-.085	-.001	-.293	.025
10.4	12.1	.347	.740	.021	.006	-.242	.048
14.4	12.2	.405	.770	-.028	-.007	-.408	.034
18.5	12.2	.542	.836	-.106	-.023	-.437	.024
M = 0.95							
2.3	0	-0.111	0.810	0.146	0.003	0.010	0.007
6.3	0	-.027	.827	.101	.003	.017	.003
10.5	0	.069	.857	.060	.003	.023	-.003
14.6	0	.180	.917	.016	.004	.000	-.007
18.8	.1	.315	1.002	-.047	.004	-.030	-.015
22.8	.2	.466	1.089	-.144	.006	-.061	-.018
6.4	4.3	.018	.851	.111	-.002	-.221	.014
10.6	4.2	.126	.896	.065	-.004	-.174	.001
14.7	4.2	.231	.959	.007	-.006	-.150	-.004
18.8	4.1	.351	1.029	-.063	-.011	-.122	-.005
10.5	8.1	.154	.897	.035	.022	-.176	.062
14.7	8.2	.271	.972	-.012	.008	-.214	.042
18.9	8.3	.408	1.136	-.067	-.012	-.294	.021
23.0	8.2	.576	1.176	-.160	-.009	-.284	.035
10.8	12.6	.316	1.016	.044	-.025	-.469	.008
14.9	12.5	.407	1.060	-.007	-.020	-.473	.020
19.0	12.5	.507	1.126	-.077	-.009	-.493	.037
M = 1.35							
2.6	0	0.110	1.133	0.165	0.004	0.020	0.002
6.8	0	.199	1.183	.127	.005	.009	.001
10.9	0	.301	1.239	.085	.008	.016	.002
15.0	0	.426	1.323	-.005	.008	.011	.000
19.1	0	.558	1.418	-.116	.008	.010	-.002
23.1	0	.687	1.531	-.233	.004	.007	-.010
11.0	4.3	.320	1.249	.086	.018	-.245	.030
15.0	4.3	.452	1.328	-.008	.010	-.240	.016
19.1	4.3	.585	1.430	-.115	.012	-.238	.017
11.0	8.5	.365	1.258	.069	.023	-.525	.061
15.0	8.5	.503	1.340	-.041	.011	-.511	.041
19.1	8.5	.620	1.429	-.140	.010	-.498	.043
23.1	8.5	.728	1.536	-.249	.018	-.498	.043
11.0	12.9	.402	1.264	.066	.009	-.770	.049
15.1	12.8	.512	1.341	-.025	.008	-.747	.051
19.1	12.7	.637	1.433	-.150	.010	-.748	.072

TABLE IX.- AERODYNAMIC DATA FOR THE S_3 COMBINATION

α, deg	β, deg	C_L	C_D	C_m	C_l	C_Y	C_n
M = 0.60							
-28.1	0	-0.167	1.036	-0.032	-0.008	-0.009	0.000
-24.1	0	-.231	1.019	-.059	-.002	.006	.001
-20.1	0	-.240	1.008	-.068	-.002	-.013	.004
-16.0	0	-.240	.946	-.066	.000	.014	-.002
-12.0	0	-.249	.884	-.055	.002	.006	.005
-16.1	0	-.262	.928	-.068	.000	.013	-.006
-12.1	0	-.271	.870	-.071	.000	.012	.001
-8.0	0	-.227	.821	-.068	.001	.002	-.007
-4.0	0	-.237	.772	-.051	.002	-.005	.013
0	0	-.239	.740	-.034	.000	.013	-.008
-.1	0	-.224	.736	-.038	.000	-.015	.002
3.9	0	-.199	.701	-.041	-.004	.002	.004
7.9	0	-.146	.668	-.027	-.010	.017	.011
12.0	0	-.072	.623	-.020	-.006	.001	.016
16.0	0	-.053	.583	-.008	-.004	-.001	.007
11.9	0	-.065	.596	-.011	-.003	-.002	.003
16.0	0	-.025	.579	-.010	-.001	.001	.004
20.0	0	.014	.546	-.008	-.001	.002	.002
24.0	0	.060	.533	-.002	-.002	-.002	.002
28.0	0	.112	.550	.017	.000	.007	.002
0	-16.2	-.331	.755	-.040	.011	.486	.066
0	-12.1	-.286	.747	-.035	.010	.350	.063
0	-8.0	-.253	.749	-.036	.005	.210	.030
0	-4.0	-.247	.732	-.042	.002	.107	.002
0	0	-.235	.731	-.042	.000	-.030	-.009
M = 1.00							
-28.2	0	-0.179	1.390	-0.051	0.006	0.013	0.000
-24.2	0	-.286	1.354	-.056	.006	.033	.000
-20.1	0	-.313	1.315	-.043	.000	.029	-.002
-16.1	0	-.331	1.249	-.044	.000	-.005	.004
-12.1	0	-.378	1.208	-.037	.001	.016	.003
-16.2	0	-.374	1.252	-.050	.000	.001	.006
-12.2	0	-.418	1.220	-.057	.005	.002	.013
-8.2	0	-.410	1.154	-.036	.001	-.007	.015
-4.1	0	-.374	1.091	-.021	.003	-.011	.003
0	0	-.361	1.039	-.004	.003	-.003	.004
-.2	0	-.382	1.049	.001	-.002	-.004	.000
3.8	0	-.329	1.004	.015	-.003	.012	.000
7.9	0	-.268	.952	.024	-.005	.009	.002
11.9	0	-.218	.910	.031	-.005	.006	.008
16.0	0	-.166	.888	.036	-.003	.005	.009
11.9	0	-.221	.905	.036	.000	.009	-.001
15.9	0	-.152	.887	.035	.000	.008	-.001
20.0	0	-.076	.870	.038	.000	.006	.004
24.0	0	-.019	.861	.045	.001	.008	.001
28.1	0	.041	.833	.060	.000	.014	-.002
0	-16.3	-.444	1.070	-.001	.013	.558	.075
0	-12.2	-.418	1.068	.001	.004	.377	.069
0	-8.1	-.397	1.076	.004	.003	.231	.046
0	-4.0	-.385	1.078	.002	.003	.120	.024
0	-.1	-.374	1.049	.001	.003	.001	.000

TABLE IX.- AERODYNAMIC DATA FOR THE S_3 COMBINATION - Concluded

α, deg	β, deg	C_L	C_D	C_m	C_l	C_Y	C_n
M = 1.40							
-28.1	0	-0.157	1.584	-0.009	0.005	0.027	0.011
-24.1	0	-.200	1.556	-.005	.003	.024	.010
-20.1	0	-.237	1.493	.000	.002	.017	.003
-16.0	0	-.287	1.471	-.004	.002	.016	.008
-12.0	0	-.315	1.420	-.001	.001	.022	.005
-16.1	0	-.294	1.467	.000	.000	.018	.000
-12.1	0	-.327	1.425	-.004	.000	.020	.001
-8.1	0	-.337	1.355	.012	-.001	.025	-.005
-4.0	0	-.324	1.290	.024	.000	.014	-.002
0	0	-.303	1.230	.028	.000	.008	.000
-.1	0	-.292	1.247	.039	-.001	-.001	.000
3.9	0	-.262	1.180	.048	.000	.006	-.001
7.9	0	-.225	1.113	.044	-.001	.003	.005
12.0	0	-.181	1.043	.047	-.001	.000	.009
16.0	0	-.129	.999	.048	-.001	.002	.009
11.9	0	-.181	1.054	.048	.002	.006	-.001
15.9	0	-.125	1.024	.052	.002	.009	-.002
20.0	0	-.073	1.006	.050	.002	.013	-.002
24.1	0	-.029	1.003	.059	.000	.013	-.008
28.1	0	.019	1.007	.074	.000	.010	-.010
0	-16.3	-.370	1.217	.041	.035	.706	.038
0	-12.2	-.345	1.221	.040	.024	.531	.035
0	-8.1	-.328	1.228	.043	.018	.345	.024
0	-4.0	-.320	1.221	.048	.008	.162	.014
0	-.1	-.313	1.218	.045	.004	-.004	.004

TABLE X.- AERODYNAMIC DATA FOR THE S_3D_2 COMBINATION

α, deg	β, deg	C_L	C_D	C_m	C_l	C_Y	C_n
M = 0.60							
-16.1	0	-0.268	0.952	-0.069	0.000	-0.017	0.017
-12.1	0	-.229	.874	-.052	.002	-.006	.004
-8.0	0	-.224	.777	-.026	.001	.000	.000
-4.0	0	-.191	.693	-.012	.002	.004	.001
0	0	-.149	.622	-.008	.000	.000	.001
0	0	-.149	.611	-.003	-.004	.007	-.001
3.9	0	-.135	.610	-.018	-.005	.004	.002
7.9	0	-.127	.615	-.017	-.006	-.006	.007
11.9	0	-.100	.619	-.007	-.007	.003	.008
16.0	0	-.060	.607	.018	-.005	-.008	.009
0	-16.2	-.320	.819	-.014	.007	.473	.071
0	-12.1	-.280	.817	-.017	.008	.338	.065
0	-8.1	-.256	.769	-.018	.007	.241	.028
0	-4.0	-.209	.700	-.015	.009	.136	.022
0	0	-.186	.640	-.015	.001	-.004	.004
M = 1.00							
-16.3	0	-0.404	1.236	-0.051	-0.003	-0.053	0.092
-12.2	0	-.377	1.154	-.020	.003	-.026	.049
-8.1	0	-.358	1.055	.014	.005	-.010	.014
-4.0	0	-.308	.938	.028	.007	-.006	.007
0	0	-.232	.849	.039	.004	-.016	.007
-.1	0	-.239	.806	.051	-.004	-.012	.002
3.9	0	-.201	.822	.018	-.004	-.005	.010
7.9	0	-.153	.839	.013	-.004	.003	.004
12.0	0	-.129	.871	.022	-.001	.014	.008
16.0	0	-.097	.890	.047	.000	.008	.009
0	-16.3	-.411	1.083	.025	.013	.608	.086
0	-12.2	-.384	1.042	.030	.007	.407	.083
0	-8.1	-.357	1.010	.038	.008	.277	.055
0	-4.0	-.301	.902	.042	.008	.165	.026
0	-.1	-.262	.786	.054	.001	-.008	-.005
M = 1.40							
-16.1	0	-0.301	1.403	0.028	0.004	-0.014	0.019
-12.1	0	-.311	1.263	.057	.003	-.012	.025
-8.0	0	-.291	1.123	.074	.004	-.017	.020
-4.0	0	-.237	.965	.080	.006	-.013	.020
0	0	-.166	.849	.055	.003	-.019	.016
0	0	-.170	.810	.084	-.004	-.015	.000
3.9	0	-.127	.801	.037	-.005	-.010	.007
8.0	0	-.083	.839	.019	-.005	.002	.014
12.0	0	-.061	.883	.031	-.004	.002	.009
16.1	0	-.045	.950	.047	-.005	.002	.005
0	-16.4	-.322	1.202	.049	.034	.785	.063
0	-12.3	-.291	1.141	.059	.024	.590	.040
0	-8.2	-.243	1.051	.070	.025	.414	.021
0	-4.1	-.206	.911	.069	.014	.228	-.003
0	-.1	-.178	.782	.059	-.004	-.016	.006

TABLE XI.- AERODYNAMIC DATA FOR THE $S_3D_2V_2$ COMBINATION

α, deg	β, deg	C_L	C_D	C_m	C_l	C_Y	C_n
M = 0.60							
-8.1	0	-0.316	0.832	-0.026	-0.004	0.032	0.013
-4.1	0	-.279	.755	-.006	-.002	.041	.009
0	0	-.191	.685	-.014	-.001	.034	.004
3.9	0	-.148	.686	-.030	-.005	.018	.010
7.9	0	-.124	.699	-.026	-.005	.015	.014
0	-8.2	-.263	.805	-.003	-.024	.583	.000
0	-4.1	-.238	.744	.001	-.016	.344	-.012
0	0	-.213	.645	-.003	.000	.053	-.018
0	4.1	-.227	.725	-.009	.010	-.263	-.005
0	8.2	-.251	.782	-.012	.021	-.545	-.005
M = 1.00							
-8.2	0	-0.379	1.083	0.025	0.000	0.033	-0.002
-4.1	0	-.337	.978	.051	.001	.027	-.001
0	0	-.228	.861	.051	-.003	.027	-.002
3.9	0	-.179	.885	.019	-.003	.032	.000
8.0	0	-.131	.911	.011	-.002	.035	.000
0	-8.3	-.297	1.070	.027	-.028	.653	.002
0	-4.2	-.262	.981	.041	-.017	.403	-.013
0	0	-.250	.880	.054	-.003	.031	-.005
0	4.2	-.265	.968	.033	.014	-.327	.018
0	8.3	-.282	1.038	.015	.024	-.606	.008
M = 1.40							
-8.1	0	-0.327	1.132	0.104	-0.001	0.010	0.008
-4.0	0	-.254	.969	.091	-.001	.014	.007
0	0	-.163	.871	.059	-.003	.009	.002
4.0	0	-.122	.879	.020	-.003	.016	.009
8.0	0	-.075	.936	.010	-.003	.023	.015
0	-8.3	-.232	1.127	.068	-.010	.676	-.025
0	-4.2	-.203	1.014	.069	-.009	.381	-.023
0	0	-.187	.868	.076	-.005	.020	.001
0	4.1	-.204	.999	.062	-.003	-.320	.032
0	8.3	-.227	1.102	.060	.004	-.612	.037

TABLE XII.- AERODYNAMIC DATA FOR THE $S_3D_2H_2H_3V_2$ COMBINATION

α, deg	β, deg	C_L	C_D	C_m	C_l	C_Y	C_n
M = 0.60							
-28.2	0	-0.518	1.182	-0.013	0.003	0.024	0.013
-24.2	0	-.537	1.154	-.024	.003	.029	.006
-20.1	0	-.530	1.129	-.021	.003	.005	.010
-16.1	0	-.512	1.067	-.008	.005	-.002	.017
-12.1	0	-.459	.971	.000	.006	.012	.010
-16.2	0	-.556	1.060	-.006	-.005	.013	-.005
-12.1	0	-.506	.957	.000	-.002	.017	-.016
-8.1	0	-.459	.863	.014	-.006	.023	-.012
-4.0	0	-.383	.770	.016	-.008	.021	-.009
0	0	-.243	.689	.010	-.014	.032	-.010
-.1	0	-.233	.666	-.012	-.012	.036	.001
3.9	0	-.127	.673	-.031	-.015	.023	-.002
7.9	0	-.036	.689	-.033	-.015	.019	.008
12.0	0	.057	.709	-.029	-.013	.014	.007
16.0	0	.165	.719	-.029	-.008	.010	.017
12.0	0	.107	.688	-.036	-.011	.026	.004
16.0	0	.204	.714	-.018	-.009	.026	-.001
20.1	0	.279	.748	-.011	-.009	.030	.000
24.1	0	.331	.779	-.002	-.008	.032	-.002
28.1	0	.370	.814	.014	-.008	.044	.001
0	-16.3	-.349	.896	-.009	-.076	.944	.014
0	-12.2	-.302	.859	-.002	-.055	.790	.017
0	-8.2	-.272	.827	-.009	-.043	.592	-.001
0	-4.1	-.256	.774	.003	-.029	.329	-.008
0	0	-.237	.675	.000	-.007	.027	-.007
M = 1.00							
-28.3	0	-0.542	1.503	0.004	0.003	0.026	0.007
-24.3	0	-.601	1.478	.004	.004	.024	.009
-20.2	0	-.613	1.444	.008	.002	.015	.006
-16.2	0	-.600	1.378	.020	.004	.005	.008
-12.1	0	-.546	1.243	.037	.002	.009	.007
-16.3	0	-.619	1.378	.015	-.001	.001	.000
-12.2	0	-.567	1.265	.036	.000	.009	-.010
-8.1	0	-.510	1.141	.050	-.001	.015	-.015
-4.1	0	-.408	1.015	.055	-.003	.012	-.012
0	0	-.235	.876	.045	-.014	.014	-.010
-.1	0	-.233	.880	.045	-.014	.009	.004
3.9	0	-.133	.904	.000	-.010	.013	.005
8.0	0	-.049	.937	-.009	-.008	.017	.004
12.0	0	.051	.952	-.016	-.011	.024	.008
16.1	0	.149	.970	-.001	-.007	.026	.013
12.0	0	.077	.947	-.011	-.011	.034	.000
16.0	0	.170	.968	.001	-.012	.044	-.007
20.1	0	.251	.989	.015	-.011	.042	-.001
24.2	0	.311	.991	.030	-.008	.031	-.001
28.3	0	.377	1.024	.045	-.008	.028	.004
0	-16.5	-.372	1.172	.023	-.083	1.196	-.002
0	-12.4	-.353	1.127	.029	-.072	.949	.000
0	-8.3	-.314	1.083	.024	-.053	.711	-.013
0	-4.1	-.265	.985	.035	-.034	.423	-.025
0	0	-.241	.882	.043	-.008	.001	-.002

TABLE XII.- AERODYNAMIC DATA FOR THE $S_3D_2H_2H_3V_2$ COMBINATION - Concluded

α, deg	β, deg	C_L	C_D	C_m	C_l	C_Y	C_n
M = 1.40							
-28.2	0.0	-0.453	1.781	0.063	0.002	0.026	0.001
-24.2	0	-.503	1.709	.063	.002	.027	.000
-20.1	0	-.544	1.608	.073	.004	.020	.002
-16.1	0	-.540	1.464	.100	.001	.017	.000
-12.0	0	-.511	1.306	.127	.000	.022	-.006
-16.2	0	-.540	1.480	.108	.001	.025	-.015
-12.1	0	-.521	1.313	.127	.000	.022	-.018
-8.1	0	-.485	1.163	.134	-.002	.013	-.013
-4.0	0	-.380	1.012	.129	-.010	.034	-.018
0	0	-.231	.913	.089	-.011	.030	-.017
0	0	-.229	.939	.091	-.008	-.001	.001
3.9	0	-.132	.946	.035	-.008	.009	.003
8.0	0	-.054	.989	.017	-.009	.019	.005
12.0	0	.020	1.026	.006	-.010	.015	.009
16.1	0	.077	1.092	.023	-.008	.012	.007
11.9	0	.018	1.042	.005	-.010	.008	.007
16.0	0	.074	1.103	.023	-.011	.005	.005
20.1	0	.152	1.149	.029	-.010	.004	.006
24.2	0	.216	1.182	.047	.000	-.027	.117
28.2	0	.288	1.186	.056	-.011	.006	.004
0	-16.5	-.354	1.289	.066	-.048	1.323	-.055
0	-12.3	-.330	1.259	.075	-.040	1.011	-.047
0	-8.2	-.292	1.168	.090	-.024	.710	-.040
0	-4.1	-.266	1.058	.087	-.019	.392	-.034
0	0	-.238	.926	.085	-.009	.014	-.008

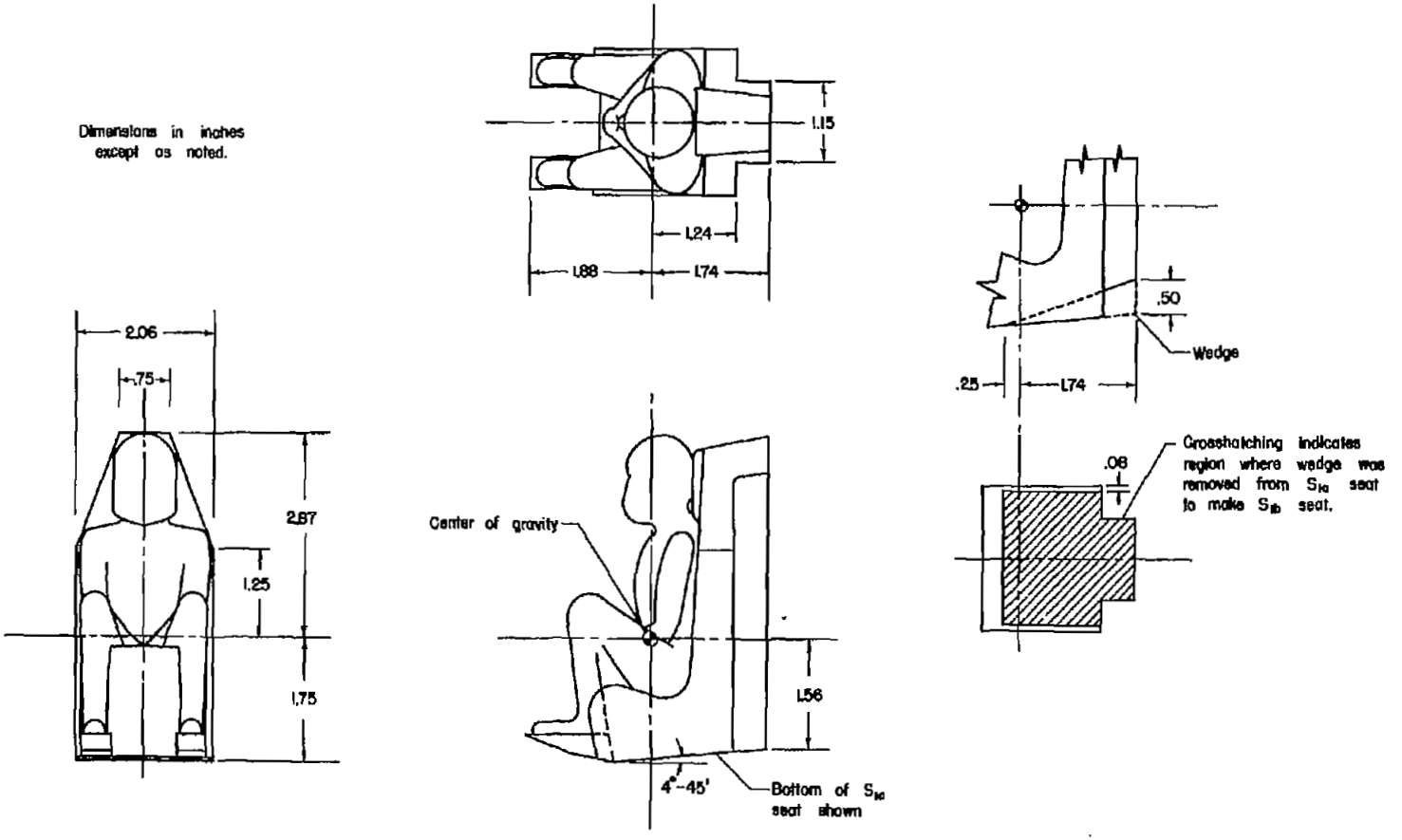

(a) S_{1a} and S_{1b}.

Figure 1.- Models employing the conventional upward ejected pilot-seat combination.

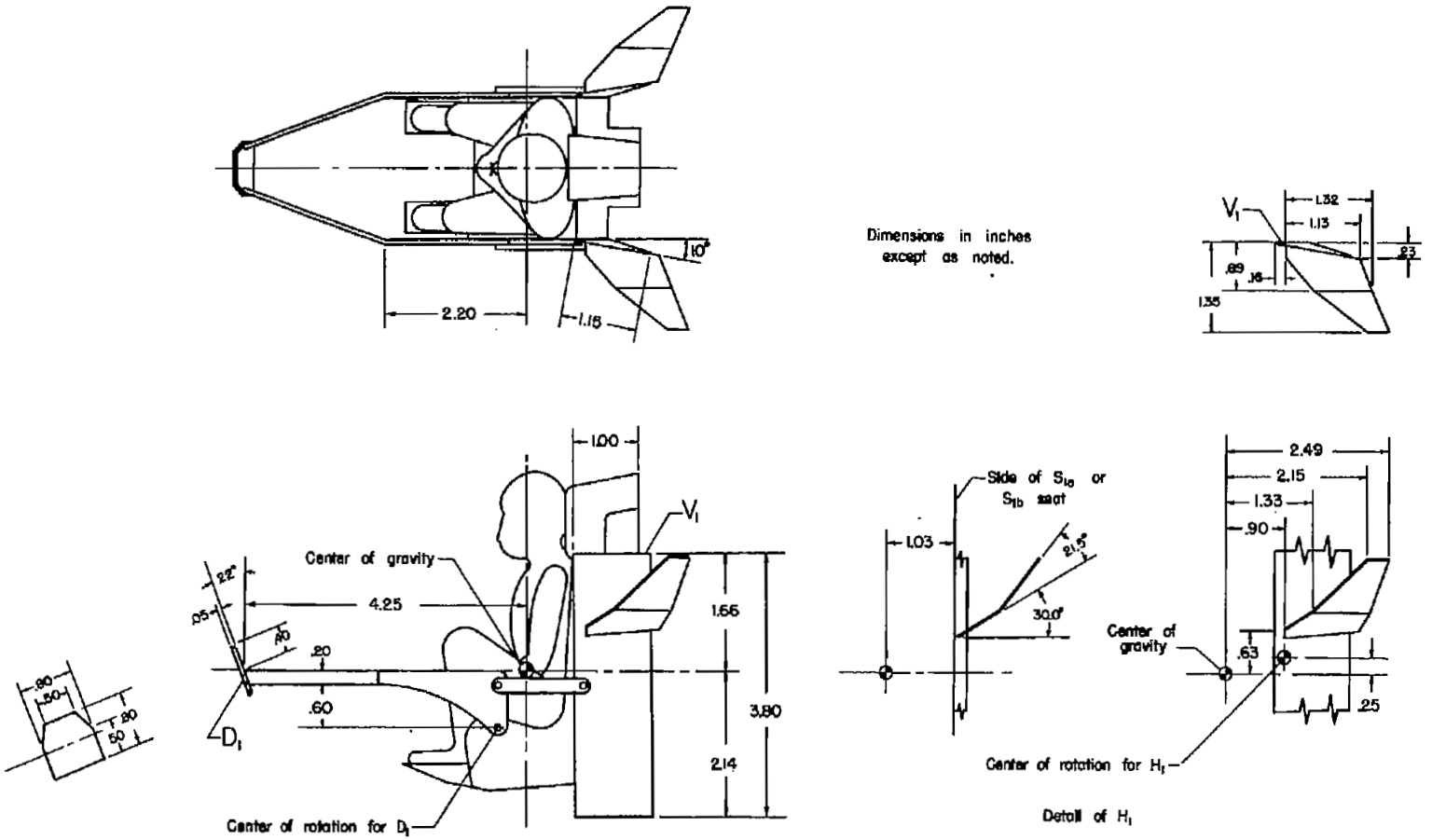

(b) $S_{1a}D_1H_1V_1$, $\delta = 0^{\circ}$, $i = 0^{\circ}$

Figure 1.- Concluded.

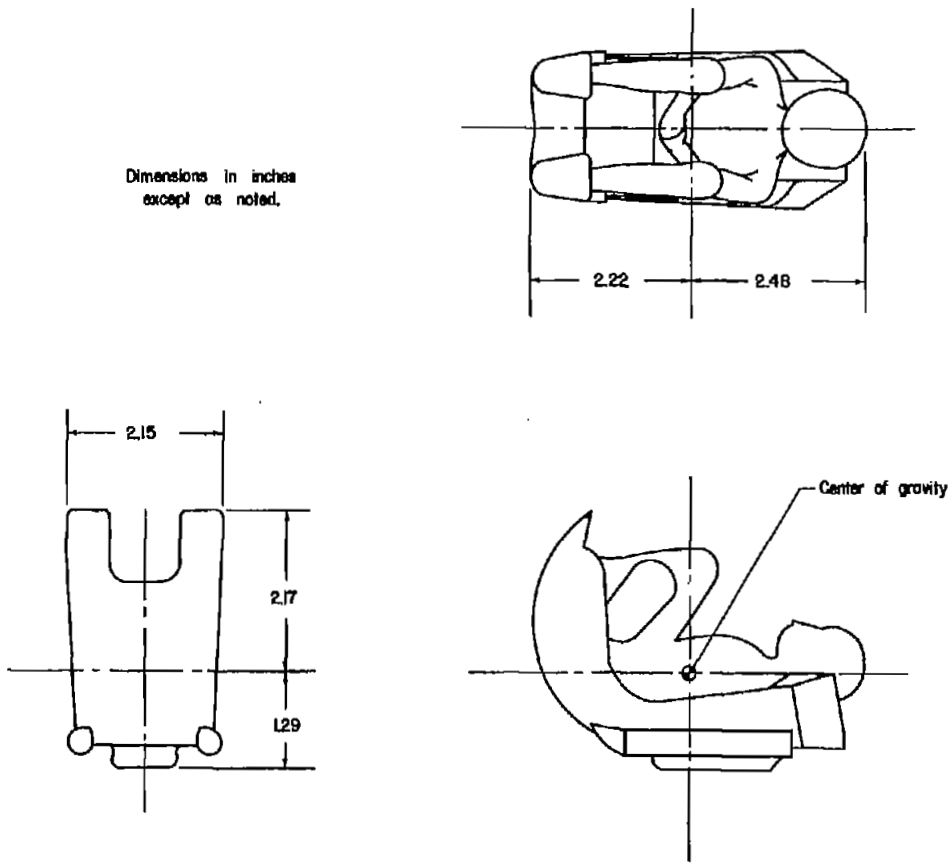

(a) S_2

Figure 2.- Models employing the sled-type upward ejected pilot-seat combination.

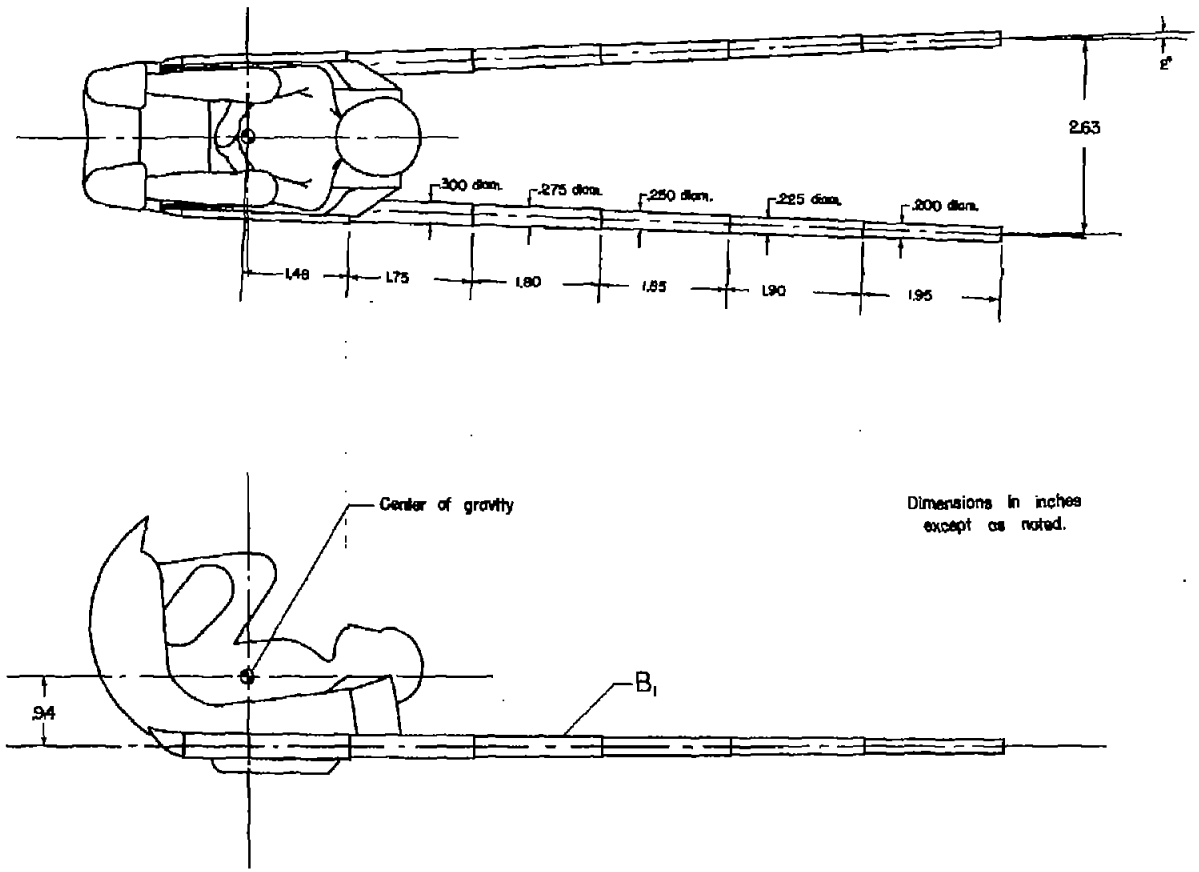

(b) S_2B_1

Figure 2.- Continued.

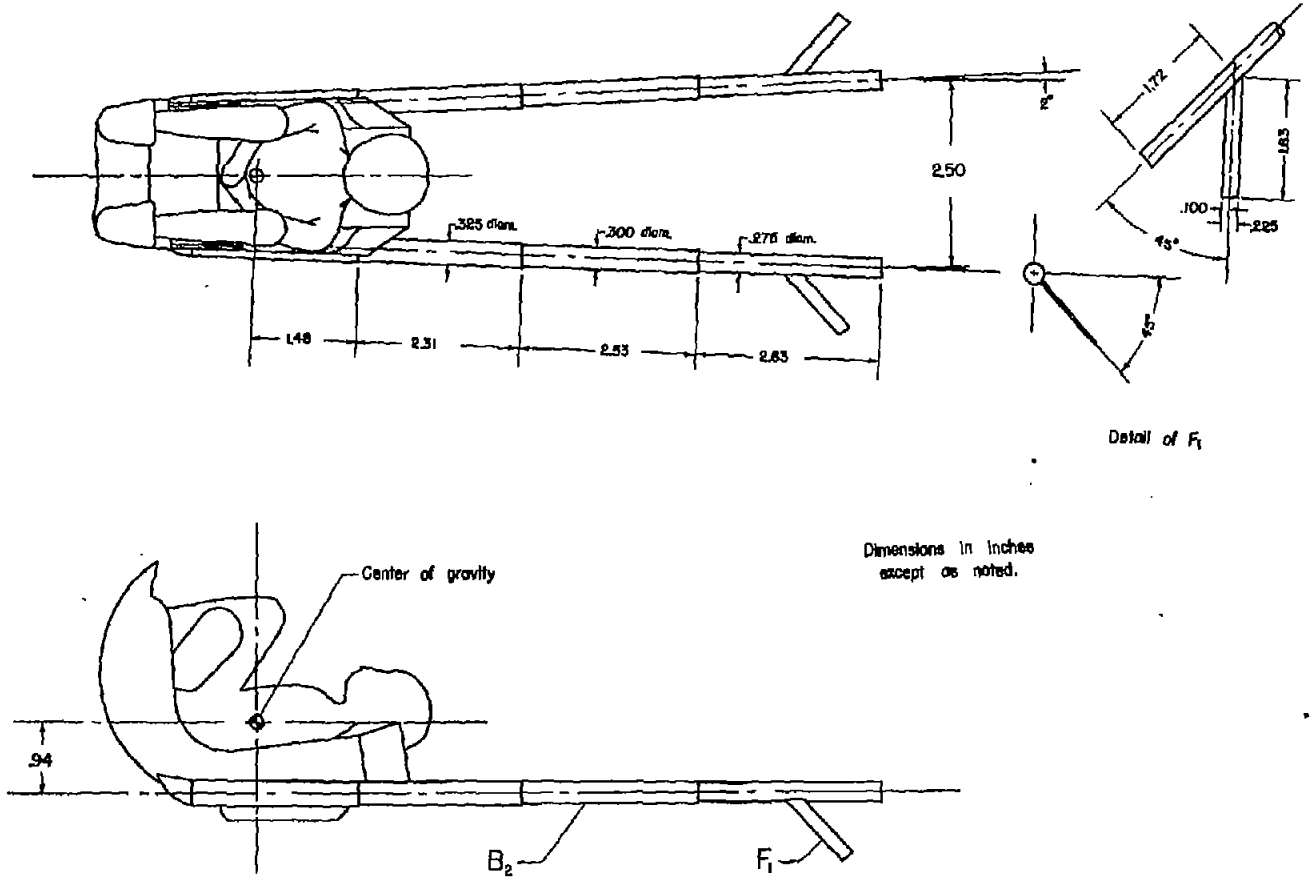

(c) $S_2B_2F_1$

Figure 2.- Continued.

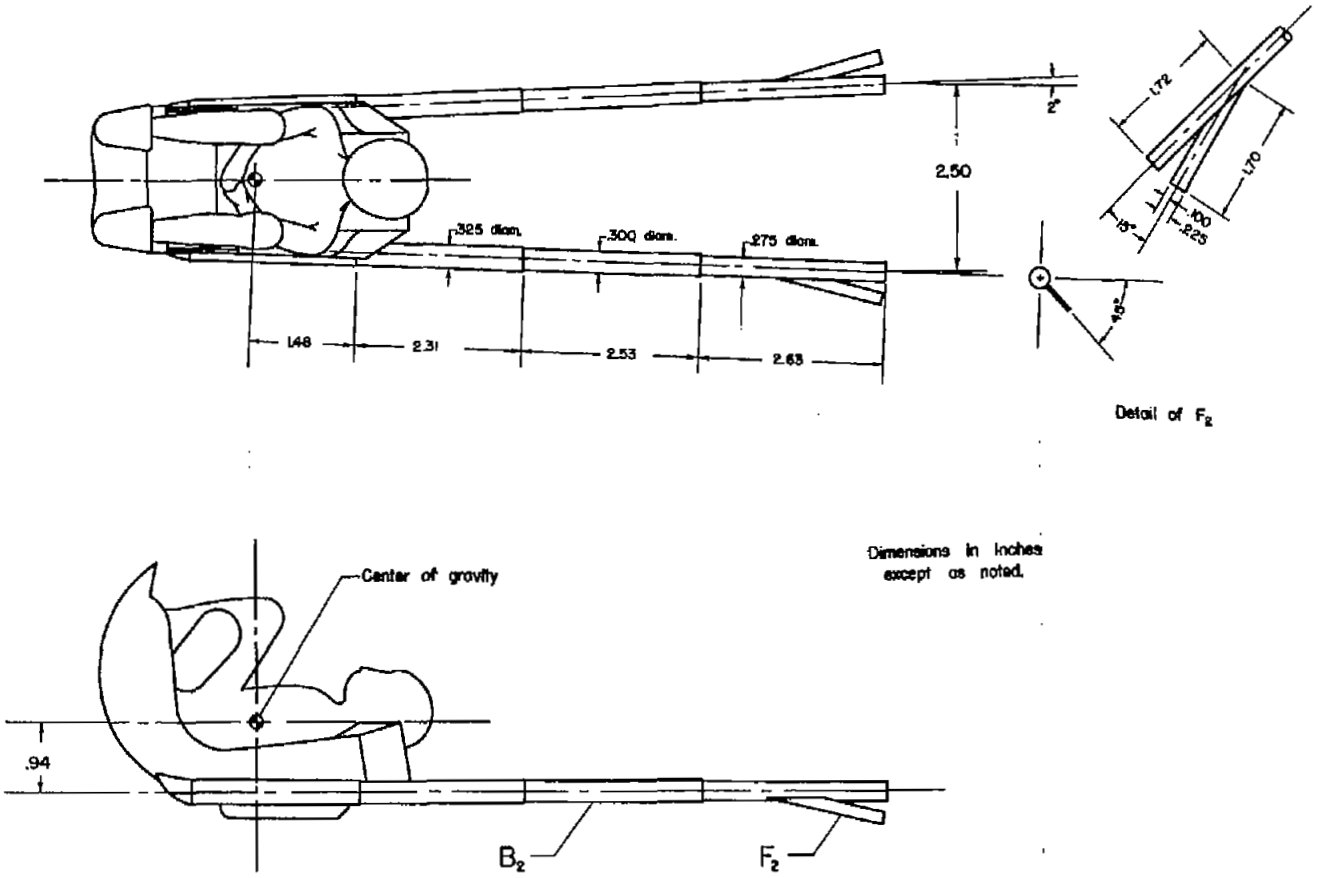

(d) $S_2B_2F_2$

Figure 2.- Concluded.

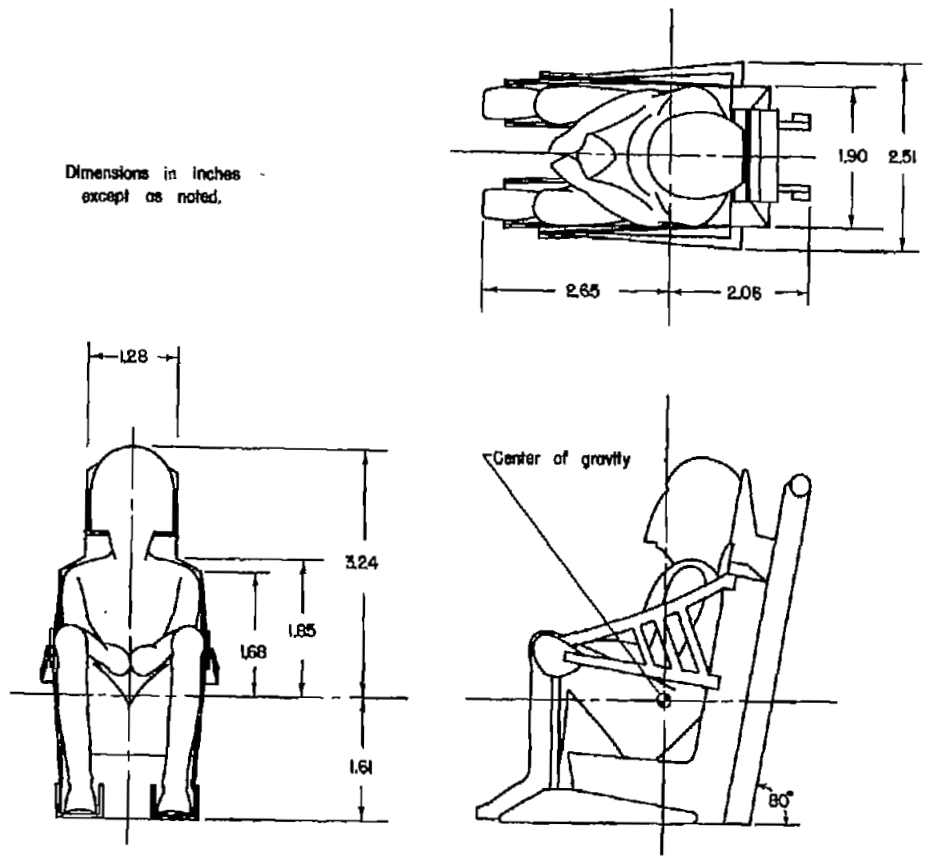

(a) S_s

Figure 3.- Models employing the downward ejected pilot-seat combination.

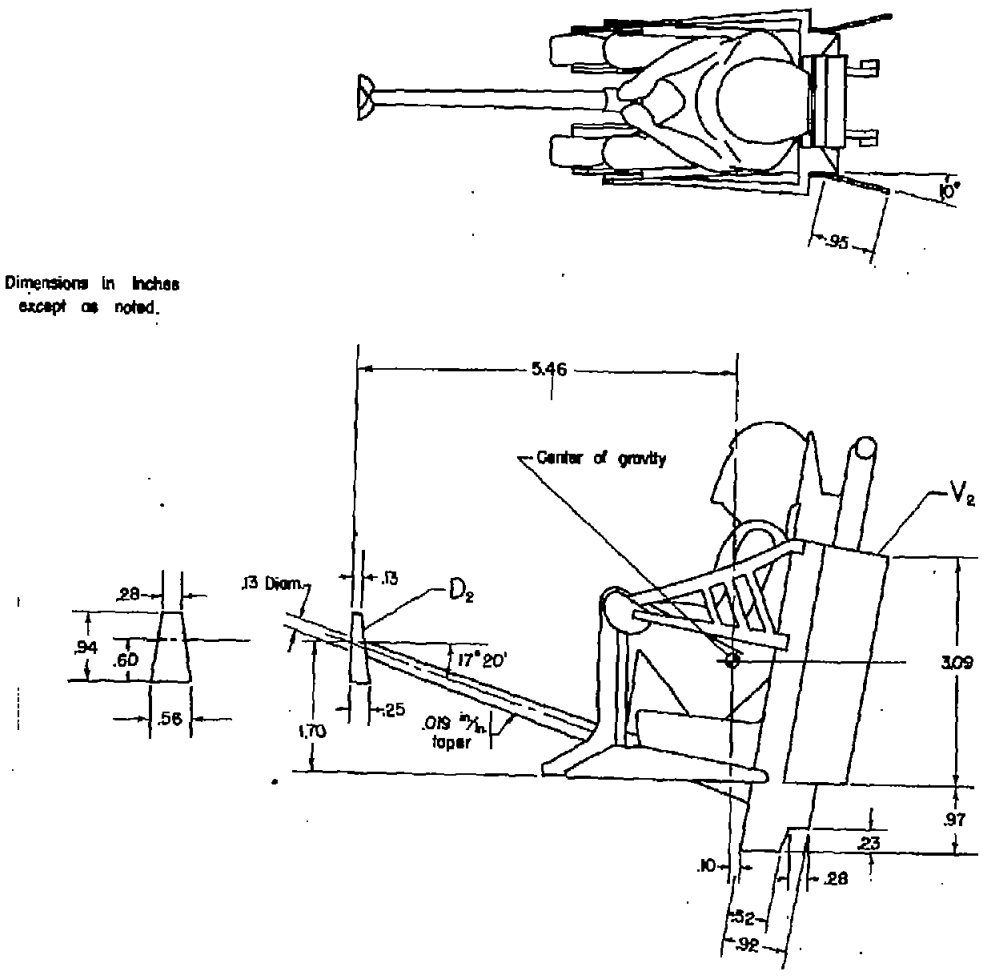

(b) $S_3D_2V_2$

Figure 3.- Continued.

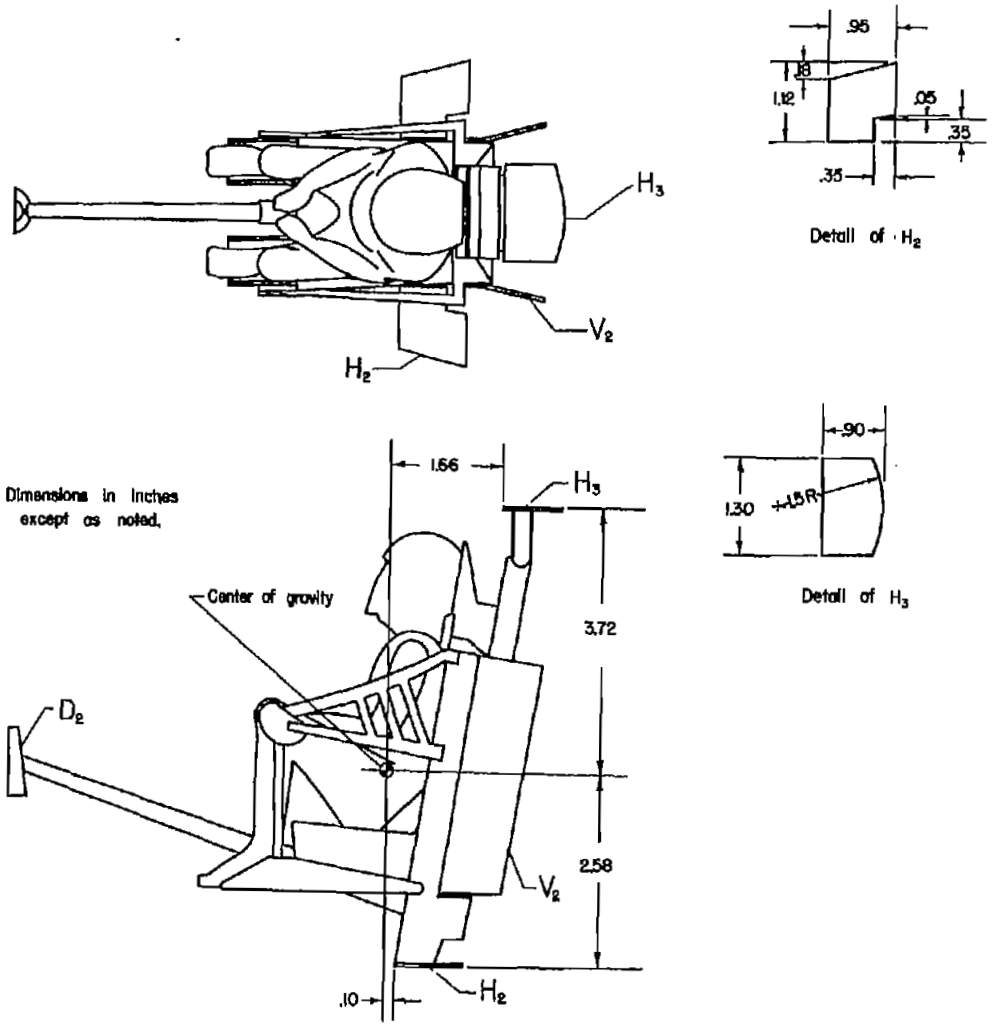

(c) $S_3D_2H_2H_3V_2$

Figure 3.- Concluded.

A-21348

Figure 4.- The downward ejected pilot-seat combination installed in the Ames 2- by 2-foot transonic wind tunnel.

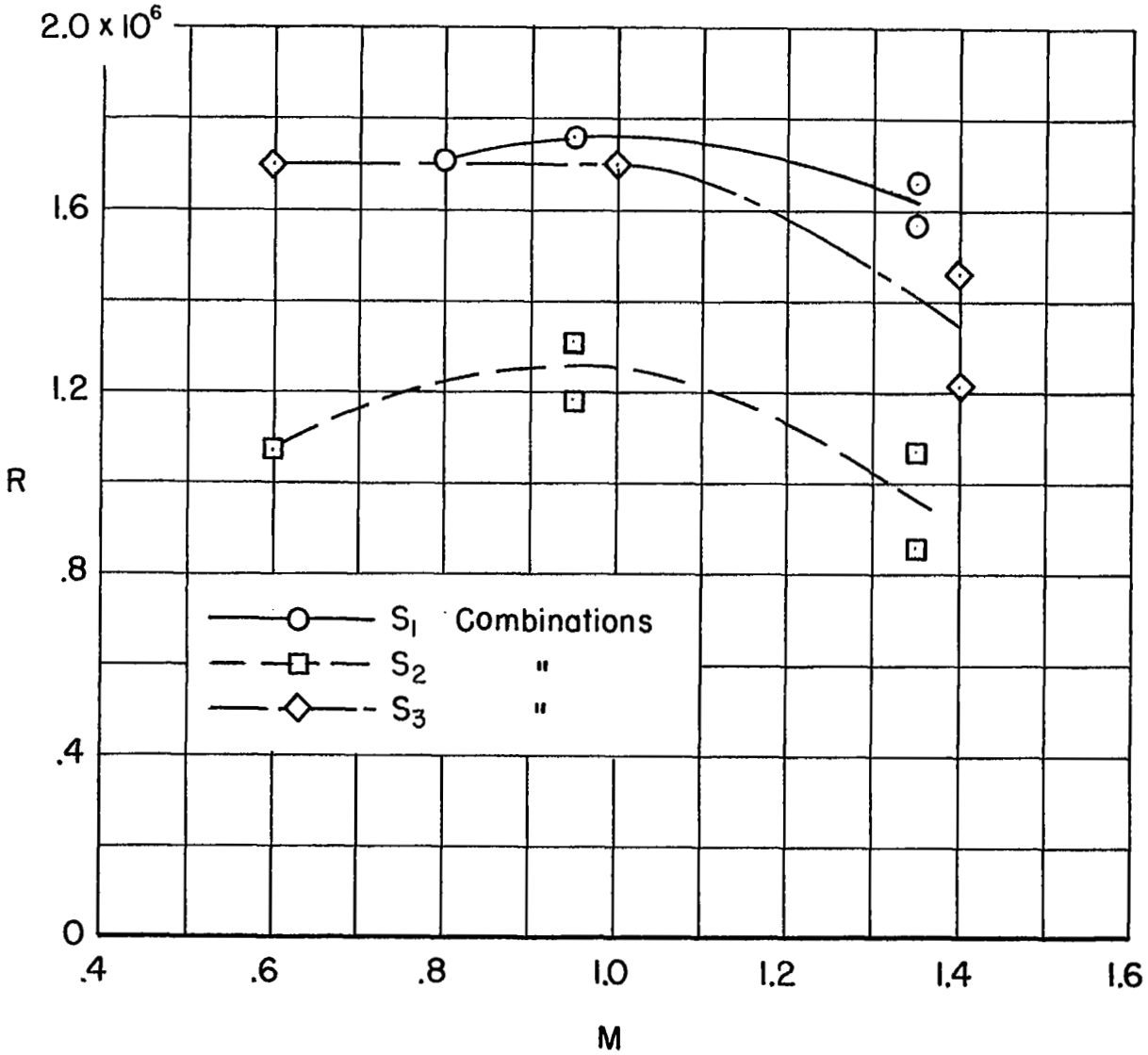

Figure 5.- Test Reynolds numbers and Mach numbers.

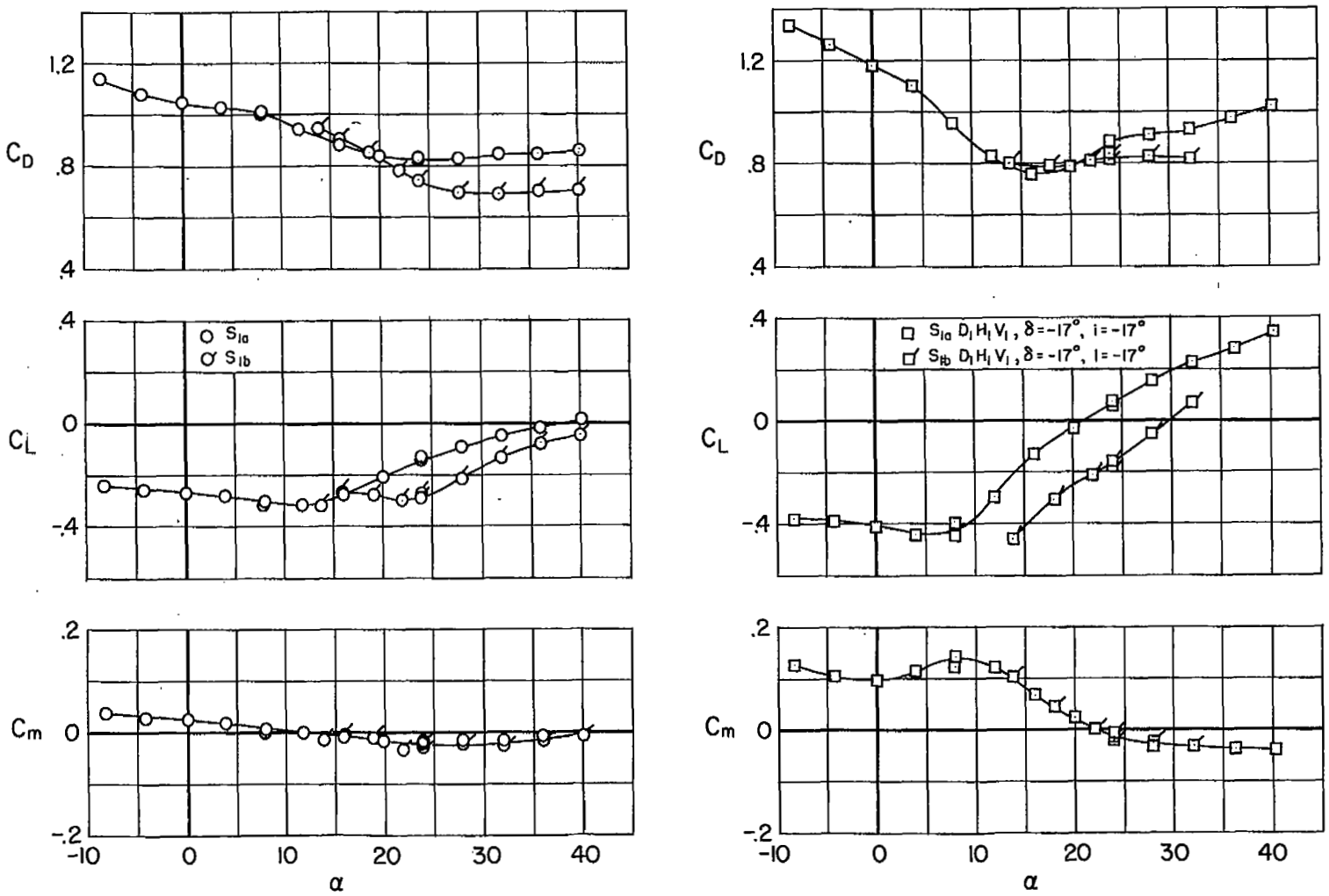

Figure 6.- Effect of variation in seat shape on the longitudinal aerodynamic characteristics of the basic and modified conventional upward ejected pilot-seat combinations; M = 0.95.

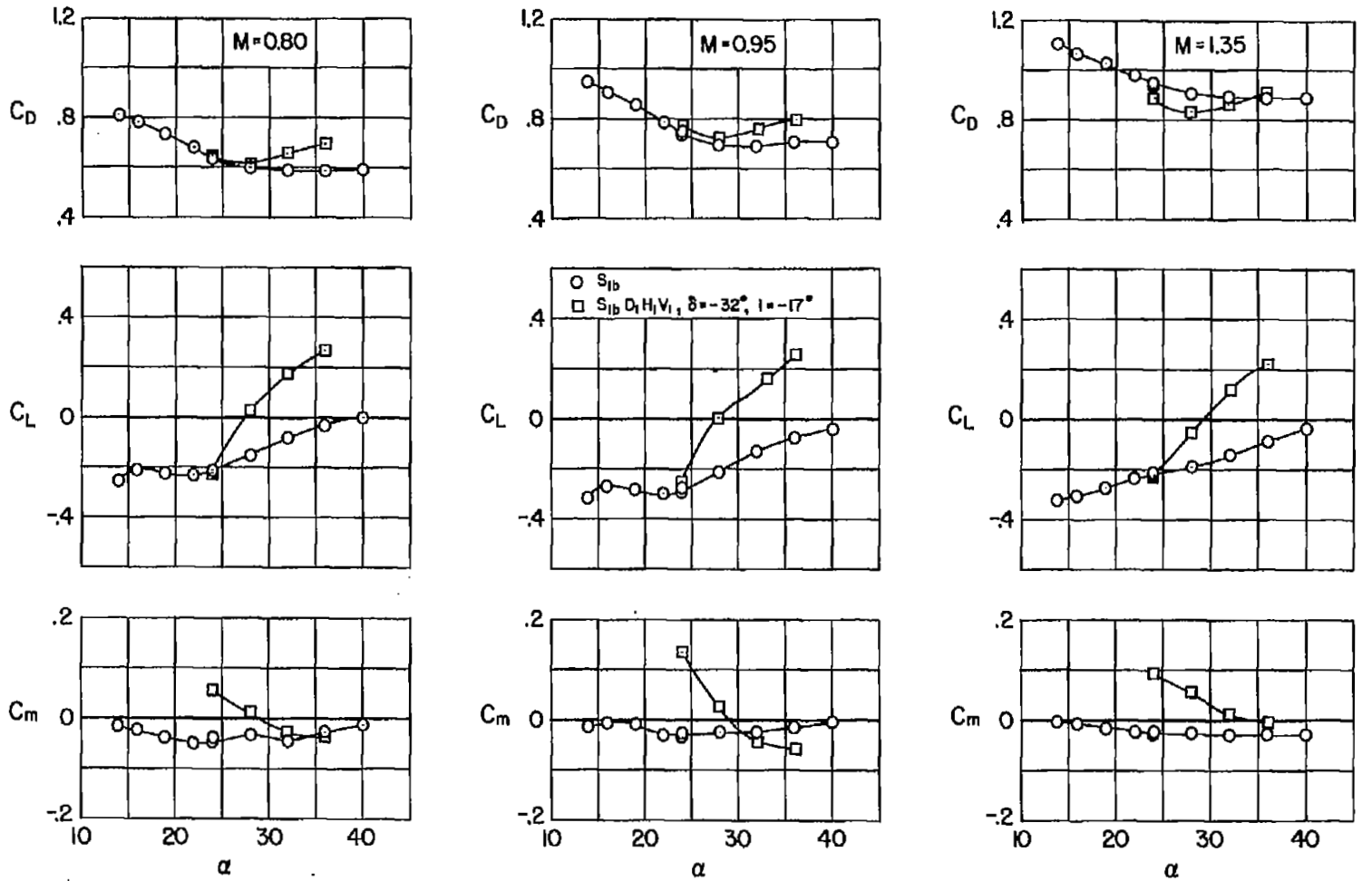

(a) Longitudinal characteristics at $\beta = 0^{\circ}$.

Figure 7.- Aerodynamic characteristics of the basic and modified conventional upward ejected pilot-seat combinations.

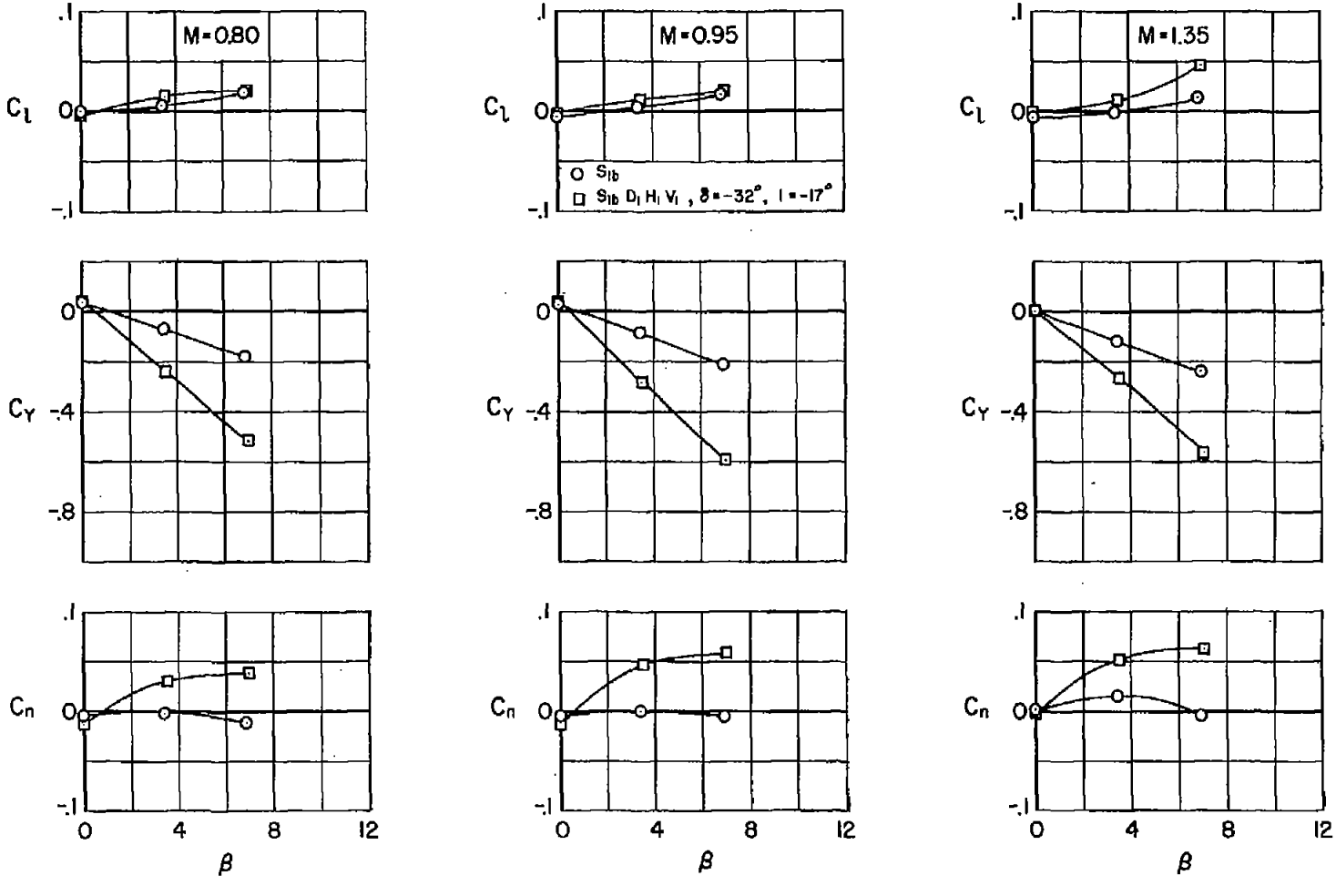

(b) Lateral-directional characteristics at $\alpha = 28^{\circ}$.

Figure 7.- Concluded.

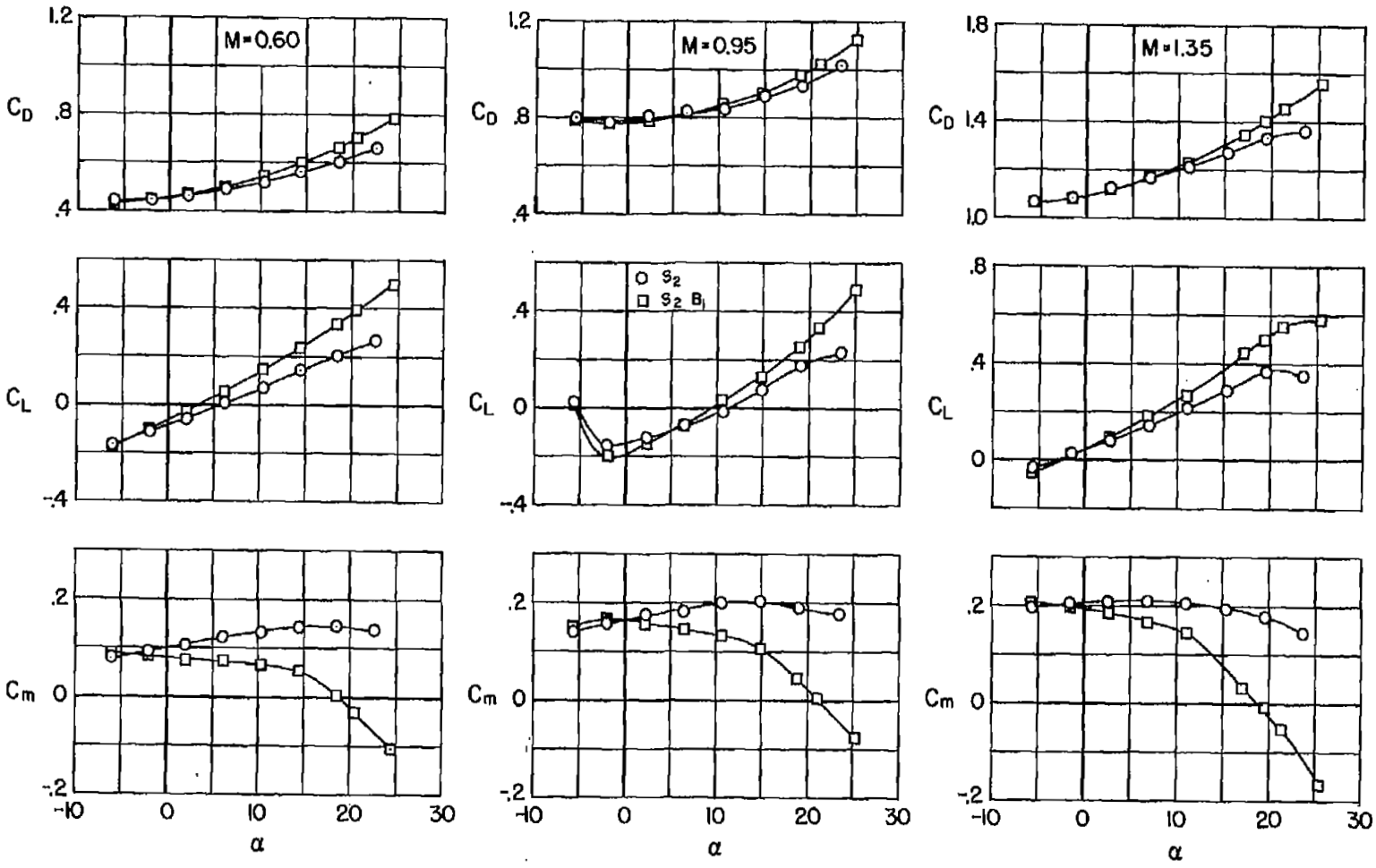

(a) Longitudinal characteristics at $\beta = 0^{\circ}$.

Figure 8.- Aerodynamic characteristics of the basic and modified sled-type upward ejected pilot-seat combinations.

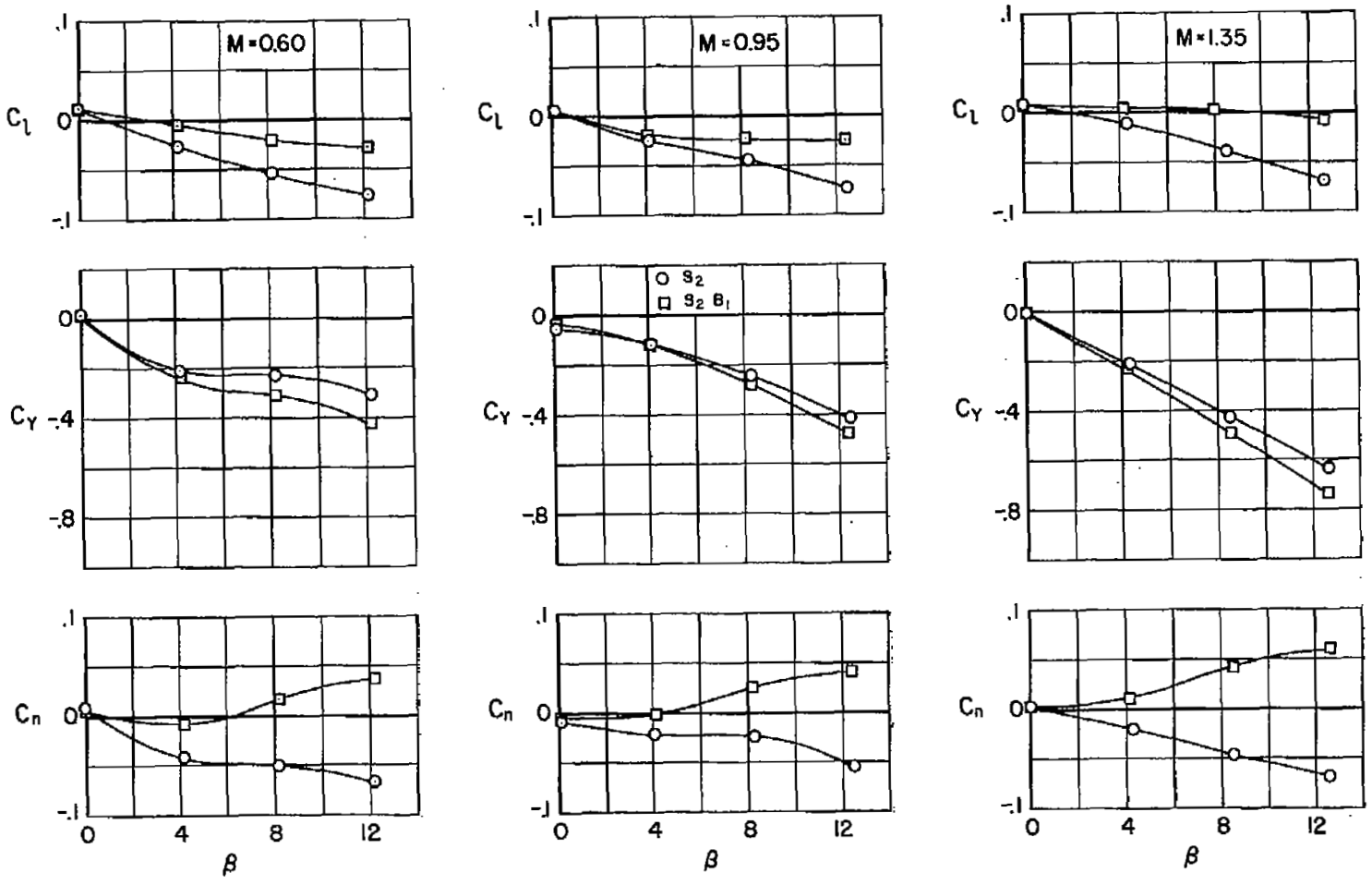

(b) Lateral-directional characteristics at $\alpha = 19^{\circ}$.

Figure 8.- Concluded.

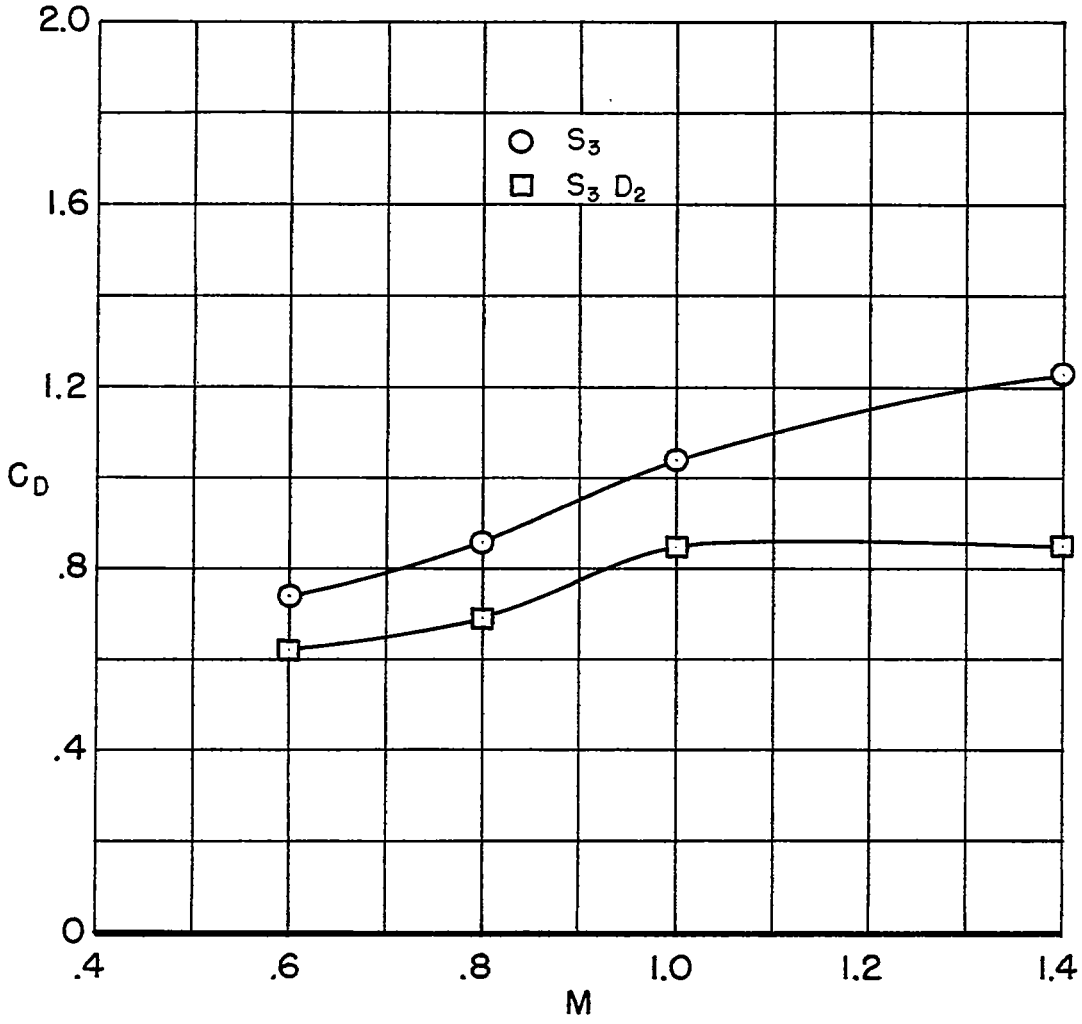

Figure 9.- Variation with Mach number of the drag coefficient of the downward ejected pilot-seat combination with and without flow deflector; $\alpha = 0^{\circ}$.

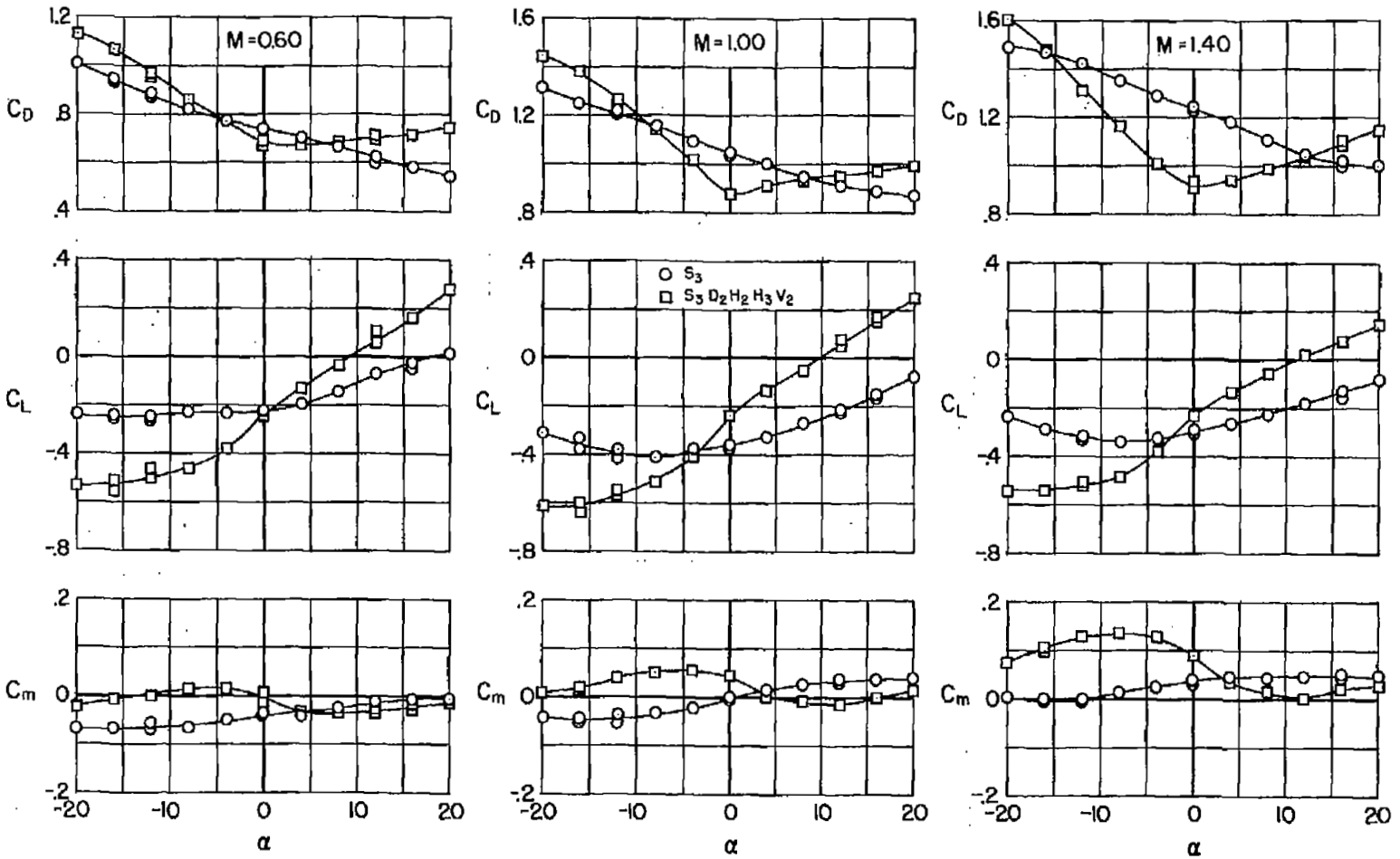

(a) Longitudinal characteristics at $\beta = 0^{\circ}$.

Figure 10.- Aerodynamic characteristics of the basic and modified downward ejected pilot-seat combinations.

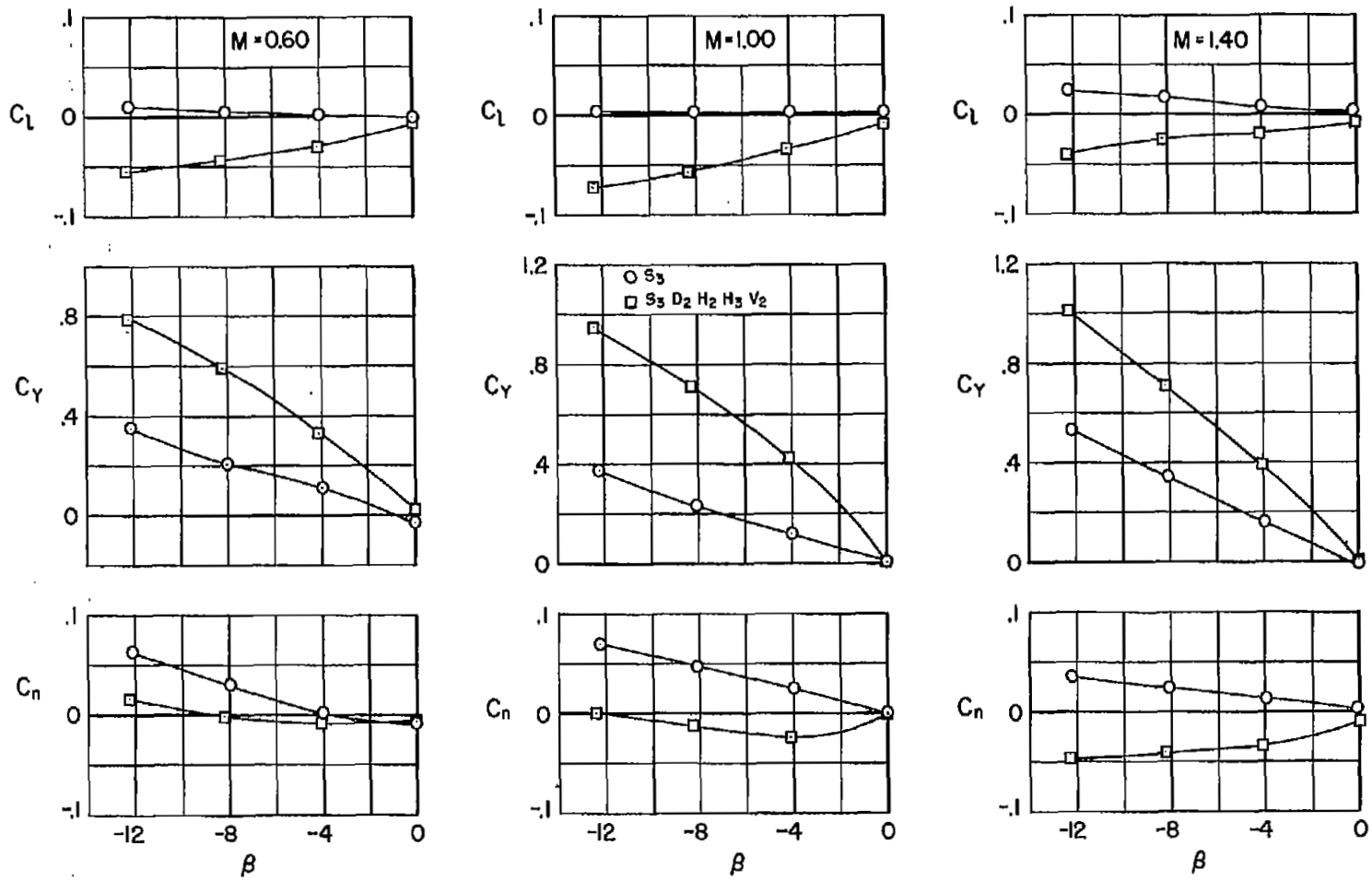

(b) Lateral-directional characteristics at $\alpha = 0^{\circ}$.

Figure 10.- Concluded.

NACA - Langley Field, Va.