UNCLASSIFIED
[redacted]

c. 2 6
Copy
RM L55L05

NACA RM L55L05

NACA

RESEARCH MEMORANDUM

TABULATED PRESSURE DATA FOR A SERIES OF CONTROLS ON A 60° DELTA WING AT MACH NUMBERS OF 1.61 AND 2.01

By Douglas R. Lord and K. R. Czarnecki

Langley Aeronautical Laboratory
Langley Field, Va.

CLASSIFICATION CHANGED

To UNCLASSIFIED

By authority of NASA Class. Change Notices No. 19 dtd May 26, 1965
HYR-6-30-65

CLASSIFIED DOCUMENT
This material contains information affecting the National Defense of the United States within the meaning of the espionage laws, Title 18, U.S.C., Secs. 793 and 794, the transmission or revelation of which in any manner to an unauthorized person is prohibited by law.

NATIONAL ADVISORY COMMITTEE FOR AERONAUTICS

WASHINGTON

March 30, 1956

[redacted]
UNCLASSIFIED

NASA Technical Library
3 1176 01437 7825

NATIONAL ADVISORY COMMITTEE FOR AERONAUTICS

RESEARCH MEMORANDUM

TABULATED PRESSURE DATA FOR A SERIES OF CONTROLS ON A 60° DELTA WING AT MACH NUMBERS OF 1.61 AND 2.01

By Douglas R. Lord and K. R. Czarnecki

SUMMARY

An investigation has been made at Mach numbers of 1.61 and 2.01 and Reynolds numbers from 1.7×10^6 to 7.6×10^6 to determine the pressure distributions over a 60° delta wing having 20 different control configurations. Measurements were made at angles of attack from 0° to 15° for control deflections from -30° to 30°. This report presents the complete tabulated pressure data for the range of test conditions.

INTRODUCTION

As a part of a general program of research on controls, an investigation is underway in the Langley 4- by 4-foot supersonic pressure tunnel to determine the important parameters in the design of controls for use on a 60° delta wing at supersonic speeds. The results have been obtained from two series of tests by means of pressure distributions and direct measurements of hinge moments. The first series was conducted at a Mach number of 1.61 and consisted primarily of tip controls, some fence configurations, and a trailing-edge control with and without a spoiler mounted on the wing just ahead of the control. Much of the control hinge-moment and effectiveness results and some illustrative pressure distributions from this series have been presented in references 1 to 7. The second series of tests consisted of several trailing-edge controls and some fence configurations, all at a Mach number of 1.61 and four of the tip controls at a Mach number of 2.01.

Because of the time involved in the reduction and analysis of the data, and the immediate interest in the basic pressure data, the purpose of this report is to present tabulations of the pressures measured on the surfaces of the 20 configurations for both series of tests without any analysis. The tests were made for a wing angle-of-attack range from 0° to 15° and for a control deflection range from -30° to 30°. All

[redacted]

UNCLASSIFIED

configurations were tested at a Reynolds number of 4.2×10^6 based on the wing mean aerodynamic chord, and one configuration was also tested at Reynolds numbers of 1.7×10^6 and 7.6×10^6 at a Mach number of 1.61.

SYMBOLS

$b/2$	wing semispan
c_R	wing root chord
C_p	pressure coefficient, $\frac{p - p_l}{q}$
M	stream Mach number
p	stream static pressure
p_l	local surface pressure
q	stream dynamic pressure
R	Reynolds number (based on wing mean aerodynamic chord)
x	distance from wing apex in chordwise direction
y	distance from wing apex in spanwise direction
α	wing angle of attack
δ	control deflection relative to wing (positive when control trailing edge is deflected down)

APPARATUS

Wind Tunnel

This investigation was conducted in the Langley 4- by 4-foot supersonic pressure tunnel, which is a rectangular, closed-throat, single-return type of wind tunnel with provisions for the control of the pressure, temperature, and humidity of the enclosed air. Flexible nozzle walls were adjusted to give the desired test section Mach numbers of 1.61 and 2.01. During the tests, the dewpoint was kept below -20° F so that the effects of water condensation in the supersonic nozzle were negligible.

Model and Model Mounting

The model used in this investigation consisted of a half-delta wing having 11 interchangeable controls and various associated control adapters (or replacement sections) required to fit the controls to the basic wing component. The control configurations are presented in figure 1 grouped according to whether they were tip controls (fig. 1(a)), trailing-edge controls (fig. 1(b)), or tip controls with modifications such as fences or tabs (fig. 1(c)). The 11 basic configurations are identified as configurations A through G, I, J, J1, and J2. Modifications were made to these basic configurations to obtain the remaining 9 configurations. Configuration H was obtained by installing the control of configuration F in the hinge-line hole for configuration E. Configurations J3 and J4 were made from configuration J by adding paddle balances and a spoiler, respectively. Configuration E1 was obtained by adding a tab on a boom mounted on the inboard edge of the control of configuration E. Configurations E2, E3, and F1, F2, and F3 were made by mounting various fences on the wing at the wing-control juncture of configurations E and F, respectively. The location of the pressure orifices can be determined from tables 1 and 2 and the sketches in figure 2.

The basic wing had a 60° sweptback leading edge, a root chord of 18.14 inches, and a semispan of 10.48 inches. The wing had a rounded NACA 63-series section extending 30-percent root chord back from the leading edge, a constant-thickness center section with a thickness-chord ratio of 3 percent based on the root chord, and a sharp trailing edge. Near the wing tip, the nose section joined directly to the tapered trailing edge without any flat midsection. Configurations J1 and J2 had thickened trailing edges as shown in the sketches of figure 1.

The basic wing and controls were constructed of steel. (For details of construction, see ref. 1.) The paddle balances and tab were also constructed of steel. The spoiler and the fences were constructed of 1/16-inch stock brass.

The semispan wing was mounted horizontally in the tunnel from a turntable in a steel boundary-layer bypass plate which was located vertically in the test section about 10 inches from the sidewall, as shown in figures 3 and 4.

TESTS

The model angle of attack was changed by rotating the turntable in the bypass plate on which the wing was mounted. (See fig. 3.) The angle of attack was measured by a vernier on the outside of the tunnel, inasmuch as the angular deflection of the wing under load was negligible.

Control deflection was changed by a gear mechanism mounted on the pressure box which rotated the strain-gage balance, the torque tube, and the control as a unit. The control deflections were set approximately with the aid of an electrical control-position indicator mounted on the torque tube close to the wing root and measured under load during testing with a cathetometer mounted outside the tunnel. The pressure distributions were determined from photographs of the multiple-tube manometer boards to which the pressure leads from the model orifices were connected.

Tests were made over an angle-of-attack range from 0° to 15° at increments of either 3° or 6°. The control deflection range was from -30° to 30° at increments of 5° or 10°. Most of the tests were made at a tunnel stagnation pressure of 15 lb/sq in. absolute at $M = 1.61$, and 17.5 lb/sq in. absolute at $M = 2.01$, corresponding to a Reynolds number, based on the mean aerodynamic chord of 12.10 inches, of 4.2×10^{6}. Configuration E was also tested at $R = 1.7 \times 10^{6}$ and 7.6×10^{6} at $M = 1.61$.

PRECISION OF DATA

The mean Mach numbers in the region occupied by the model are estimated from calibrations to be 1.61 and 2.01 with local variations being smaller than ± 0.02. There is no evidence of any significant flow angularities. The estimated accuracies in setting the wing angle of attack and control deflection are $\pm 0.05^{\circ}$ and $\pm 0.1^{\circ}$, respectively. The measured pressure coefficients are believed accurate to ± 0.01. In order to facilitate the publication of the data, a complete final check has not been made and random errors may be present where damage to a model or malfunctioning of an orifice may have occurred during the tests. Such errors can usually be detected by a visual inspection of the plotted pressure distributions.

PRESENTATION OF DATA

The pressure measurements for the complete range of test conditions are presented in tables 3 to 28. The orifice locations are identical on the upper and lower surfaces; therefore, the location of an orifice on the upper surface corresponds to the identically numbered orifice on the lower surface. In many instances the orifice numbered 1 is on the leading edge of the wing and the pressure coefficient has been listed as if it were on the upper surface, there being no corresponding lower surface reading. The same is true for the orifices located at $x/c_R = 0.852$ on

the trailing-edge control configurations, for these orifices are located on the rounded leading-edge part of the control and are shielded from the stream by the wing. In other cases, where orifices were known to be bad, pressures may be listed on one surface only.

Langley Aeronautical Laboratory,
National Advisory Committee for Aeronautics,
Langley Field, Va., November 14, 1955.

REFERENCES

1. Czarnecki, K. R., and Lord, Douglas R.: Hinge-Moment Characteristics for Several Tip Controls on a 60° Sweptback Delta Wing at Mach Number 1.61. NACA RM L52K28, 1953.

2. Czarnecki, K. R., and Lord, Douglas R.: Preliminary Investigation of the Effect of Fences and Balancing Tabs on the Hinge-Moment Characteristics of a Tip Control on a 60° Delta Wing at Mach Number 1.61. NACA RM L53D14, 1953.

3. Czarnecki, K. R., and Lord, Douglas R.: Load Distributions Associated With Controls at Supersonic Speeds. NACA RM L53D15a, 1953.

4. Lord, Douglas R., and Czarnecki, K. R.: Recent Information on Flap and Tip Controls. NACA RM L53I17a, 1953.

5. Lord, Douglas R., and Czarnecki, K. R.: Aerodynamic Characteristics of a Full-Span Trailing-Edge Control on a 60° Delta Wing With and Without a Spoiler at a Mach Number of 1.61. NACA RM L53L17, 1954.

6. Lord, Douglas R., and Czarnecki, K. R.: Aerodynamic Characteristics of Several Tip Controls on a 60° Delta Wing at a Mach Number of 1.61. NACA RM L54E25, 1954.

7. Czarnecki, K. R., and Lord, Douglas R.: Simplified Procedures for Estimating Flap-Control Loads at Supersonic Speeds. NACA RM L55E12, 1955.

TABLE 1

SPANWISE LOCATION OF ORIFICE STATIONS

[Chordwise extent of stations shown in fig. 2 and table 2]

Configuration	Values of 2y/b at station -								
	1	2	3	4	5	6	7	8	9
A	0.048	0.210	0.372	0.537	0.592	0.745	0.860	See fig. 2	----------
B	.048	.210	.372	.537	See fig. 2	.602	See fig. 2	0.734	See fig. 2
C	.048	.210	.372	.537	.601	.640	.683	.758	See fig. 2
D	.055	.242	.430	.619	.688	.776	.876	.958	----------
E, E1, E2, E3, F F1, F2, F3, G, H	.048	.210	.372	.537	.597	.733	.869	.967	----------
I	.048	.210	.372	.537	.592	.745	See fig. 2	----------	----------
J, J1, J2, J3, J4	.048	.210	.372	.537	.592	.745	See fig. 2	----------	----------

TABLE 2

CHORDWISE LOCATION OF ORIFICES

[Spanwise location of orifice stations shown in fig. 2 and table 1]

(a) Configuration A

Orifice	Values of x/c_R at station -								
	1	2	3	4	5	6	7	8	9
1	0.048	0.210	0.372	0.535	0.592	0.745	0.872	0.852	
2	.075	.238	.400	.562	.619	.772	.919	.872	
3	.219	.381	.538	.700	.713	.816	.952	.919	
4	.334	.502	.659	.860	.779	.860	.982	.952	
5	.445	.612	.747	.897	.860	.852		.982	
6	.588	.756	.860	.936	.852	.872			
7	.742	.860	.897	.985	.872	.919			
8	.860	.897	.936		.919	.952			
9	.897	.936	.985		.952	.982			
10	.936	.985			.982				
11	.985								
12									
13									

TABLE 2.- Continued

CHORDWISE LOCATION OF ORIFICES

[Spanwise location of orifice stations shown in fig. 2 and table 1]

(b) Configuration B

Orifice	Values of x/c_R at station -								
	1	2	3	4	5	6	7	8	9
1	0.048	0.210	0.372	0.535	0.708	0.875	0.754	0.769	0.819
2	.075	.238	.400	.562	.761	.906	.799	.824	.871
3	.219	.381	.538	.700	.810	.945	.835	.879	.926
4	.334	.502	.659	.846		.986		.934	.988
5	.445	.612	.747	.901				.992	
6	.588	.756	.846	.950					
7	.742	.846	.901	.986					
8	.846	.901	.950						
9	.901	.950	.986						
10	.950	.986							
11	.986								
12									
13									

TABLE 2.- Continued

CHORDWISE LOCATION OF ORIFICES

[Spanwise location of orifice stations shown in fig. 2 and table 1]

(c) Configuration C

Orifice	Values of x/c_R at station -								
	1	2	3	4	5	6	7	8	9
1	0.048	0.210	0.372	0.535	0.876	0.674	0.683	0.758	0.871
2	.075	.238	.400	.562	.909	.769	.711	.785	.928
3	.219	.381	.538	.700	.947	.857	.780	.879	.986
4	.334	.502	.659	.846	.991		.876	.929	
5	.445	.612	.747	.901				.992	
6	.588	.756	.846	.950					
7	.742	.846	.901	.986					
8	.846	.901	.950						
9	.901	.950	.986						
10	.950	.986							
11	.986								
12									
13									

TABLE 2.- Continued

CHORDWISE LOCATION OF ORIFICES

[Spanwise location of orifice stations shown in fig. 2 and table 1]

(d) Configuration D

Orifice	Values of x/c_R at station -								
	1	2	3	4	5	6	7	8	9
1	0.048	0.210	0.372	0.535	0.595	0.672	0.758	0.862	
2	.075	.238	.400	.562	.623	.699	.785		
3	.219	.381	.538	.700	.675	.752	.813		
4	.334	.502	.659	.846	.744	.826	.851		
5	.445	.612	.747	.901	.821	.876	.901		
6	.588	.756	.846	.950	.899	.937			
7	.742	.846	.901	.984	.970				
8	.846	.901	.950						
9	.901	.950	.984						
10	.950	.984							
11	.984								
12									
13									

TABLE 2.- Continued

CHORDWISE LOCATION OF ORIFICES

[Spanwise location of orifice stations shown in fig. 2 and table 1]

(e) Configurations E, E1, E2, E3, F, F1, F2, F3, G, H

Orifice	Values of x/c_R at station -								
	1	2	3	4	5	6	7	8	9
1	0.048	0.210	0.372	0.535	0.597	0.730	0.864	0.987	
2	.075	.238	.400	.562	.625	.758	.892		
3	.219	.381	.538	.700	.674	.808	.941		
4	.334	.502	.659	.846	.746	.879	.986		
5	.445	.612	.747	.901	.840	.973			
6	.588	.756	.846	.950	.939				
7	.742	.846	.901	.984	.988				
8	.846	.901	.950						
9	.901	.950	.984						
10	.950	.984							
11	.984								
12									
13									

TABLE 2.- Continued

CHORDWISE LOCATION OF ORIFICES

[Spanwise location of orifice stations shown in fig. 2 and table 1]

(f) Configuration I

Orifice	Values of x/c_R at station -								
	1	2	3	4	5	6	7	8	9
1	0.048	0.210	0.372	0.535	0.597	0.753	0.890		
2	.075	.238	.400	.562	.624	.778	.985		
3	.219	.381	.538	.700	.719	.853			
4	.334	.502	.659	.860	.839	.945			
5	.445	.612	.747	.852	.919	.995			
6	.588	.756	.860	.896	.972				
7	.742	.860	.852	.935					
8	.860	.852	.896	.984					
9	.852	.896	.935						
10	.896	.935	.984						
11	.935	.984							
12	.984								
13									

TABLE 2.- Concluded

CHORDWISE LOCATION OF ORIFICES

[Spanwise location of orifice stations shown in fig. 2 and table 1]

(g) Configurations J, J1, J2, J3, J4

Orifice	Values of x/c_R at station -								
	1	2	3	4	5	6	7	8	9
1	0.048	0.210	0.372	0.535	0.592	0.745	0.852		
2	.075	.238	.400	.562	.619	.772	.872		
3	.219	.381	.538	.700	.713	.816	.910		
4	.334	.502	.659	.860	.779	.860	.948		
5	.445	.612	.747	.852	.860	.872	.986		
6	.588	.756	.860	.872		.905			
7	.742	.860		.905		.949			
8	.860	.852		.949		.982			
9	.872	.872		.982					
10	.905	.905		1.000					
11	.949	.949							
12	.982	.982							
13		1.000							

Table 3

Pressure Coefficients on Delta Wing with Control

Configuration A M = 1.61 R = 4.2×10^6

Orif	Upper Surface at Station 1	2	3	4	5	6	7	8	9		Lower Surface at Station 1	2	3	4	5	6	7	8	9	Orif
								α = 00°			δ = 00°									
1	.364	.357	.291	.263	.305	.337	.031	-.041									.041			1
2	.051	.033	.022	.022	.011	.008	.024	.051			.071		.041		.007	-.003	-.002	.032		2
3	.011	.012		-.002	-.011	-.010	-.223	.018			.030	.016	.000		.003	-.003	-.210	.027		3
4	.025	-.007	-.020	-.029	-.027	.055	-.220	-.139			.036		-.016	-.005	-.040	.016	-.209	-.174		4
5	.003	.001	-.005	-.146	.007	-.039		-.297			-.004	.002	.235	-.161	-.003			-.263		5
6	.006	-.011	.003	-.145	-.029	.005					.014	-.012	.010	-.153		-.018				6
7	.011	.013	-.162	-.170	-.137	-.226					.016	.003	-.161	-.166	.012	-.204				7
8	-.012	-.162	-.158		-.183	-.209					.045	-.149	-.158		-.176	-.201				8
9	-.153	-.151	-.148		-.160	-.193					-.157	-.149	-.156		-.174	-.190				9
10	-.099	-.158			-.156						-.082	-.142			-.161					10
11											-.155									11
								α = 00°			δ = 10°									
1	.368	.362	.292	.266	.317	.348	-.137	.048									.261			1
2	.052	.033	.027	.025	.020	.025	-.162	-.180			.084		.057		.018	.010	.252	.114		2
3	.020	.015		-.001	-.002	.008	-.342	-.188			.043	.033	.016		.013	.003	-.055	.282		3
4	.030	-.005	-.018	-.025	-.008	.070	-.337	-.382			.053		-.002	.014	-.031	.036	-.047	-.017		4
5	.007	.003	-.003	-.152	.022	.048		-.405			.012	.017	.318	-.114	.012			-.054		5
6	.008	-.007	.000	-.170	-.001	-.208					.032	.006	.031	-.099		.179				6
7	.013	.018	-.163	-.195	-.283	-.357					.039	.021	-.152	-.144	.082	.030				7
8	-.009	-.160	-.154		-.271	-.365					.059	-.143	-.146		-.028	.033				8
9	-.150	-.142	-.144		-.267	-.349					-.140	-.138	-.142		-.029	.027				9
10	-.100	-.154			-.266						-.059	-.127			-.027					10
11											-.136									11
								α = 00°			δ = 20°									
1	.370	.367	.290	.268	.308	.341	-.286	.152									.568			1
2	.052	.034	.026	.022	.019	.018	-.299	-.326			.080		.042		.010	.001	.487	.463		2
3	.018	.014		-.002	-.002	.002	-.407	-.412			.035	.019	.010		.005	-.001	.197	.538		3
4	.028	-.004	-.014	-.021	-.014	.065	-.409	-.458			.042		-.010	.007	-.037	.068	.279	.107		4
5	.011	.001	-.006	-.172	.014	.196		-.444			.000	.008	.303	-.080	.016			.270		5
6	.003	-.011	-.002	-.202	.016	-.331					.020	-.005	.024	-.077		.483				6
7	.017	.020	-.162	-.237	-.385	-.434					.027	.007	-.159	-.190	.065	.373				7
8	-.009	-.160	-.153		-.376	-.402					.046	-.155	-.151		.288	.331				8
9	-.150	-.145	-.146		-.343	-.339					-.151	-.146	-.134		.219	.282				9
10	-.095	-.157			-.388						-.073	-.138			.184					10
11											-.156									11
								α = 00°			δ = 30°									
1	.372	.366	.290	.268	.308	.337	-.429	.323									.954			1
2	.054	.038	.029	.030	.019	.023	-.428	-.405			.070		.041		.007	-.002	.794	.601		2
3	.023	.020		.004	-.001	.001	-.457	-.464			.035	.023	.006		.008	.016	.622	.829		3
4	.034	-.007	-.011	-.025	-.014	.002	-.461	-.487			.048		-.012	.177	-.035	.429	.590	.560		4
5	.016	.004	-.001	-.171	.020	.341		-.471			.005	.008	.310	.061	.302			.618		5
6	.004	-.006	.001	-.198	.018	-.417					.022	-.005	.022	-.081		.509				6
7	.019	.029	-.157	-.240	-.445	-.394					.029	.013	-.166	-.220	.005	.763				7
8	-.005	-.151	-.151		-.430	-.393					.050	-.149	-.137		.620	.646				8
9	-.146	-.137	-.139		-.409	-.384					-.151	-.145	-.003		.501	.590				9
10	-.101	-.149			-.425						-.071	-.138			.434					10
11											-.146									11
								α = 06°			δ = 00°									
1	.316	.110	.139	-.013	.086	.184	-.376	-.305									.300			1
2	-.089	-.268	-.344	-.376	-.366	-.393	-.344	-.370			.207		.244		.222	.229	.179	.258		2
3	-.072	-.082		-.172	-.293	-.354	-.440	-.302			.144	.163	.158		.167	.192	-.091	.223		3
4	-.054	-.100	-.127	-.154	-.159	-.297	-.423	-.454			.158		.122	.137	.103	.181	-.086	-.049		4
5	-.088	-.104	-.116	-.229	-.119	-.221		-.438			.114	.126	.078	-.067	.157			-.086		5
6	-.078	-.094	-.101	-.219	-.049	-.319					.131	.099	.133	-.071		.169				6
7	-.066	-.055	-.228	-.235	-.214	-.400					.119	.116	-.078	-.080	.213	-.088				7
8	-.082	-.219	-.231		-.240	-.371					.140	-.074	-.063		-.098	-.071				8
9	-.216	-.212	-.220		-.227	-.341					-.071	-.068	-.072		-.073	-.065				9
10	-.174	-.221			-.241						.005	-.065			-.077					10
11											-.095									11

Table 3 Continued

Pressure Coefficients on Delta Wing with Control

Configuration A M = 1.61 R = 4.2×10^6

Orif	Upper Surface at Station 1	2	3	4	5	6	7	8	9		Lower Surface at Station 1	2	3	4	5	6	7	8	9	Orif
								α = 06°			δ = 10°									
1	.327	.111	.148	-.004	.095	.184	-.440	-.275												1
2	-.091	-.271	-.338	-.372	-.372	-.393	-.421	-.412			.222		.253		.223	.239	.598			2
3	-.074	-.083		-.164	-.291	-.348	-.446	-.440			.149	.162	.156		.161	.185	.405	.732		3
4	-.056	-.098	-.124	-.149	-.153	-.299	-.446	-.457			.161		.125	.146	.105	.186	.148	.457		4
5	-.088	-.096	-.112	-.239	-.105	-.081		-.456			.112	.133	.078	-.020	.158		.178	.065		5
6	-.082	-.093	-.097	-.243	-.038	-.395					.134	.105	.133	.001		.495		.191		6
7	-.067	-.054	-.235	-.261	-.338	-.454					.117	.119	-.080	-.055	.381	.218				7
8	-.078	-.213	-.222		-.349	-.444					.145	-.077	-.065		.095	.195				8
9	-.218	-.208	-.214		-.313	-.357					-.063	-.067	-.067		.120	.165				9
10	-.180	-.215			-.292						.012	-.061			.097					10
11											-.094									11
								α = 06°			δ = 20°									
1	.326	.101	.138	-.006	.100	.179	-.422	.078												1
2	-.088	-.277	-.343	-.382	-.368	-.395	-.420	-.432			.212		.244		.217	.236	.911			2
3	-.073	-.085		-.165	-.292	-.349	-.429	-.438			.151	.165	.157		.163	.186	.637	1.543		3
4	-.058	-.102	-.121	-.152	-.159	-.279	-.431	-.453			.158		.125	.144	.107	.265	.474	.671		4
5	-.092	-.098	-.116	-.242	-.113	.372		-.421			.106	.131	.073	.052	.165		.457	.436		5
6	-.081	-.094	-.094	-.264	-.014	-.457					.131	.100	.132	.065		.900		.504		6
7	-.067	-.057	-.233	-.296	-.417	-.462					.113	.116	-.081	-.108	.421	.564				7
8	-.086	-.213	-.229		-.414	-.436					.146	-.079	-.065		.427	.489				8
9	-.225	-.207	-.213		-.336	-.405					-.074	-.067	-.016		.355	.442				9
10	-.181	-.215			-.400						.012	-.065			.307					10
11											-.099									11
								α = 06°			δ = 30°									
1	.325	.112	.140	-.005	.088	.180	-.433	-.010												1
2	-.090	-.277	-.342	-.374	-.366	-.398	-.436	-.442			.206		.244		.220	.234	1.007			2
3	-.069	-.090		-.167	-.293	-.349	-.439	-.446			.141	.157	.158		.150	.182	.968	1.261		3
4	-.058	-.103	-.121	-.154	-.157	-.258	-.440	-.456			.158		.120	.355	.105	.726	.826	.976		4
5	-.087	-.098	-.115	-.244	-.116	.472		-.442			.101	.124	.074	.035	.472		.743	.809		5
6	-.080	-.089	-.100	-.274	-.071	-.478					.128	.101	.126	.048		.867		.746		6
7	-.064	-.059	-.232	-.287	-.471	-.456					.108	.108	-.070	-.123	.027	.944				7
8	-.080	-.216	-.224		-.446	-.461					.141	-.074	.005		.808	.829				8
9	-.222	-.210	-.211		-.439	-.440					-.073	-.075	.097		.667	.750				9
10	-.181	-.217			-.448						.005	-.058			.590					10
11											-.103									11
								α = 12°			δ = 00°									
1	.196	-.103	-.032	-.194	-.174	-.193	-.446	-.313												1
2	-.295	-.433	-.468	-.481	-.486	-.490	-.432	-.429			.342		.395		.362	.375	.361			2
3	-.141	-.194		-.441	-.453	-.478	-.434	-.445			.264	.279	.285		.303	.330	.266	.369		3
4	-.122	-.192	-.238	-.325	-.438	-.455	-.434	-.436			.283		.248	.276	.238	.338	.012	.321		4
5	-.169	-.200	-.194	-.354	-.299	-.181		-.444			.235	.248	.192	.022	.304		.037	-.016		5
6	-.146	-.189	-.170	-.366	-.101	-.428					.235	.216	.247	.014		.281		.071		6
7	-.138	-.127	-.286	-.332	-.352	-.465					.195	.229	.003	-.001	.360	.009				7
8	-.135	-.281	-.284		-.373	-.429					.230	.009	.014		-.019	.024				8
9	-.285	-.257	-.266		-.344	-.405					.018	.007	.011		.014	.024				9
10	-.229	-.271			-.314						.029	.016			.013					10
11											.027									11
								α = 12°			δ = 10°									
1	.196	-.104	-.025	-.191	-.172	-.198	-.417	-.150												1
2	-.294	-.435	-.475	-.492	-.491	-.500	-.419	-.441			.345		.396		.358	.368	.654			2
3	-.140	-.185		-.441	-.453	-.486	-.428	-.435			.269	.280	.286		.300	.331	.486	.910		3
4	-.120	-.193	-.238	-.328	-.433	-.445	-.422	-.450			.280		.248	.276	.240	.333	.334	.530		4
5	-.170	-.194	-.190	-.350	-.296	.070		-.422			.239	.244	.184	.075	.303		.313	.263		5
6	-.147	-.181	-.172	-.398	-.070	-.492					.237	.206	.252	.120		.684		.373		6
7	-.137	-.127	-.269	-.368	-.418	-.448					.195	.223	.007	.044	.637	.355				7
8	-.137	-.273	-.280		-.394	-.443					.231	.009	.017		.229	.314				8
9	-.274	-.253	-.266		-.398	-.433					.017	.012	.023		.236	.282				9
10	-.229	-.271			-.367						.030	.015			.213					10
11											.021									11

Table 3 Continued

Pressure Coefficients on Delta Wing with Control

Configuration A M = 1.61 R = 4.2×10^6

Orif	Upper Surface at Station 1	2	3	4	5	6	7	8	9		Lower Surface at Station 1	2	3	4	5	6	7	8	9	Orif
								$\alpha = 12^\circ$			$\delta = 20^\circ$									
1	.199	-.102	-.034	-.191	-.167	-.193	-.412	.261									.807			1
2	-.297	-.432	-.477	-.497	-.486	-.476	-.429	-.432			.349		.400		.364	.374	.778	1.350		2
3	-.140	-.194		-.445	-.444	-.474	-.438	-.441			.273	.289	.288		.306	.328	.658	.788		3
4	-.121	-.193	-.236	-.325	-.429	-.421	-.434	-.450			.291		.253	.288	.239	.652	.609	.626		4
5	-.168	-.199	-.191	-.351	-.288	.598		-.417			.242	.247	.198	.205	.336			.635		5
6	-.148	-.185	-.170	-.404	.014	-.474					.240	.217	.248	.208		.965				6
7	-.140	-.122	-.277	-.344	-.457	-.446					.199	.226	.005	-.014	.668	.716				7
8	-.135	-.277	-.280		-.456	-.446					.237	.017	.016		.557	.626				8
9	-.282	-.258	-.258		-.440	-.445					.016	.013	.132		.492	.591				9
10	-.235	-.271			-.446						.037	.020			.435					10
11											.021									11
								$\alpha = 12^\circ$			$\delta = 30^\circ$									
1	.194	-.100	-.029	-.187	-.171	-.188	-.439	.052									.854			1
2	-.293	-.431	-.474	-.493	-.482	-.471	-.438	-.442			.348		.394		.362	.368	1.080	1.196		2
3	-.135	-.185		-.436	-.450	-.473	-.446	-.453			.273	.277	.288		.304	.505	.959	1.056		3
4	-.120	-.189	-.225	-.319	-.435	-.409	-.446	-.466			.291		.254	.518	.240	.855	.834	.918		4
5	-.161	-.193	-.185	-.357	-.286	.585		-.440			.240	.250	.198	.247	.670			.807		5
6	-.145	-.181	-.165	-.399	-.068	-.483					.240	.216	.247	.185		.890				6
7	-.135	-.122	-.272	-.366	-.473	-.459					.191	.225	.022	-.061	.095	1.092				7
8	-.130	-.272	-.270		-.448	-.461					.239	.013	.168		.922	.949				8
9	-.277	-.255	-.234		-.468	-.453					.013	.006	.229		.794	.837				9
10	-.224	-.267			-.459						.043	.049			.698					10
11											.017									11
								$\alpha = -06^\circ$			$\delta = 00^\circ$									
1	.306	.397	.160	.141	.190	.125	.305	-.408									-.319			1
2	.188	.196	.218	.231	.220	.235	.182	.218			-.063		-.297		-.350	-.379	-.340	-.333		2
3	.120	.133		.132	.142	.180	-.112	.226			-.045	-.075	-.101		-.280	-.336	-.403	-.339		3
4	.128	.096	.110	.097	.117	.220	-.104	-.014			-.040		-.106	-.120	-.147	-.292	-.384	-.399		4
5	.115	.109	.101	-.052	.149	-.229		-.126			-.080	-.083	.222	-.227	-.120			-.390		5
6	.102	.092	.099	-.054	-.033	.147					-.058	-.083	-.068	-.225		-.288				6
7	.104	.110	-.080	-.094	-.038	-.102					-.049	-.069	-.224	-.228	-.098	-.351				7
8	.089	-.083	-.072		-.099	-.100					-.018	-.210	-.223		-.242	-.335				8
9	-.069	-.075	-.072		-.072	-.092					-.211	-.204	-.214		-.246	-.314				9
10	-.013	-.075			-.069						-.126	-.197			-.236					10
11											-.184									11
								$\alpha = -06^\circ$			$\delta = 10^\circ$									
1	.308	.397	.160	.151	.188	.119	.057	-.410									-.210			1
2	.190	.199	.228	.235	.224	.237	-.010	-.057			-.067		-.297		-.347	-.382	-.183	-.248		2
3	.121	.137		.140	.143	.180	-.251	.013			-.051	-.089	-.109		-.276	-.334	.333	-.174		3
4	.129	.100	.117	.101	.111	.222	-.248	-.146			-.045		-.110	-.119	-.144	-.288	-.324	-.290		4
5	.114	.110	.109	-.090	.152	-.231		-.295			-.084	-.082	.222	-.198	-.116			-.328		5
6	.105	.096	.101	-.114	-.003	-.113					-.066	-.092	-.073	-.199		-.224				6
7	.102	.114	-.077	-.162	-.228	-.287					-.052	-.075	-.223	-.208	-.016	-.226				7
8	.092	-.086	-.069		-.233	-.288					-.020	-.205	-.223		-.122	-.164				8
9	-.065	-.069	-.062		-.220	-.277					-.214	-.208	-.214		-.138	-.142				9
10	-.020	-.067			-.233						-.131	-.198			-.119					10
11											-.182									11
								$\alpha = -06^\circ$			$\delta = 20^\circ$									
1	.308	.395	.165	.148	.186	.124	-.142	-.314									-.010			1
2	.192	.196	.223	.237	.226	.244	-.183	-.255			-.061		-.296		-.348	-.390	.043	-.155		2
3	.126	.137		.137	.143	.183	-.365	-.187			-.041	-.080	-.103		-.277	-.339	-.184	.088		3
4	.127	.100	.115	.103	.117	.222	-.358	-.332			-.047		-.105	-.116	-.148	-.190	-.157	-.073		4
5	.117	.112	.107	-.090	.156	-.082		-.408			-.076	-.076	.230	-.163	-.113			-.099		5
6	.104	.096	.101	-.129	.055	-.293					-.059	-.086	-.071	-.206		.050				6
7	.106	.113	-.074	-.181	-.352	-.405					-.050	-.070	-.220	-.265	.027	.037				7
8	.089	-.084	-.070		-.356	-.411					-.018	-.198	-.220		.116	.112				8
9	-.057	-.069	-.065		-.338	-.348					-.214	-.205	-.205		.069	.112				9
10	-.016	-.068			-.365						-.129	-.197			.068					10
11											-.181									11

Table 3 Concluded

Pressure Coefficients on Delta Wing with Control

Configuration A M = 1.61 R = 4.2×10^6

Orif	Upper Surface at Station 1	2	3	4	5	6	7	8	9		Lower Surface at Station 1	2	3	4	5	6	7	8	9	Orif
							$\alpha = -06^\circ$				$\delta = 30^\circ$									
1	.314	.398	.164	.158	.191	.114	-.288	.612									.311			1
2	.193	.205	.224	.243	.227	.240	-.303	-.377			-.068		-.298		-.346	-.137	.416	.015		2
3	.129	.141		.136	.142	.184	-.423	-.402			-.045	-.081	-.106		-.278	-.135	.104	.459		3
4	.128	.107	.113	.101	.119	.227	-.396	-.456			-.040		-.101	.032	-.114	-.072	.211	.111		4
5	.121	.114	.111	-.082	.151	-.017		-.454			-.080	-.073	.249	-.163	.118			.216		5
6	.108	.097	.109	-.131	.092	-.403					-.061	-.087	-.068	-.232		-.035				6
7	.109	.117	-.074	-.179	-.429	-.394					-.049	-.072	-.216	-.299	.068	.211				7
8	.096	-.078	-.066		-.440	-.388					-.017	-.204	-.177		.235	.288				8
9	-.061	-.069	-.060		-.420	-.370					-.214	-.205	-.126		.248	.323				9
10	-.011	-.062			-.410						-.135	-.197			.266					10
11											-.182									11
							$\alpha = -12^\circ$				$\delta = 00^\circ$									
1	.166	.275	.018	-.099	-.046	-.067	.407	-.438									-.416			1
2	.342	.347	.376	.382	.356	.359	.284	.354			-.269		-.435		-.469	-.495	-.432	-.431		2
3	.255	.260		.275	.282	.310	-.027	.324			-.116	-.151	-.348		-.429	-.462	-.420	-.413		3
4	.257	.237	.249	.223	.252	.353	.018	.058			-.107		-.189	-.288	-.422	-.444	-.413	-.399		4
5	.241	.237	.234	.034	.287	-.209		.014			-.146	-.163	-.118	-.348	-.273			-.409		5
6	.234	.218	.224	.032	-.099	.266					-.131	-.172	-.147	-.356		-.411				6
7	.206	.226	.016	-.020	.048	-.001					-.116	-.153	-.266	-.317	-.314	-.430				7
8	.213	.006	.022		-.008	-.011					-.067	-.258	-.271		-.359	-.411				8
9	.029	.027	.034		.010	.008					-.259	-.243	-.263		-.359	-.385				9
10	.077	.027			.014						-.165	-.235			-.325					10
11											-.197									11
							$\alpha = -12^\circ$				$\delta = 10^\circ$									
1	.160	.266	.016	-.106	-.039	-.057	.128	-.473									-.404			1
2	.337	.344	.368	.380	.361	.364	.073	.020			-.268		-.436		-.474	-.492	-.390	-.426		2
3	.247	.245		.281	.289	.313	-.172	.099			-.111	-.170	-.345		-.421	-.475	-.435	-.369		3
4	.250	.231	.247	.224	.259	.355	-.173	-.073			-.106		-.192	-.282	-.425	-.451	-.417	-.406		4
5	.229	.227	.234	.018	.288	-.302		-.187			-.145	-.153	-.153	-.323	-.259			-.409		5
6	.226	.211	.221	-.032	-.073	-.029					-.125	-.169	-.139	-.301		-.401				6
7	.202	.219	.016	-.092	-.162	-.216					-.112	-.155	-.262	-.330	-.254	-.428				7
8	.208	.000	.024		-.180	-.228					-.065	-.254	-.267		-.312	-.423				8
9	.022	.017	.032		-.186	-.201					-.258	-.240	-.252		-.313	-.395				9
10	.075	.022			-.207						-.164	-.231			-.293					10
11											-.194									11
							$\alpha = -12^\circ$				$\delta = 20^\circ$									
1	.161	.270	.010	-.101	-.052	-.067	-.082	-.393									-.326			1
2	.334	.349	.370	.380	.360	.355	-.120	-.193			-.276		-.451		-.487	-.489	-.233	-.401		2
3	.252	.249		.277	.279	.307	-.290	-.090			-.126	-.178	-.349		-.432	-.474	-.371	-.210		3
4	.253	.228	.247	.222	.254	.352	-.300	-.210			-.113		-.197	-.289	-.428	-.417	-.356	-.280		4
5	.231	.232	.233	.010	.284	-.401		-.339			-.155	-.159	-.182	-.288	-.231			-.310		5
6	.223	.216	.225	-.054	-.063	-.235					-.130	-.176	-.148	-.318		-.382				6
7	.204	.223	.015	-.108	-.312	-.356					-.117	-.159	-.267	-.382	-.231	-.346				7
8	.214	.005	.025		-.322	-.357					-.069	-.263	-.273		-.249	-.329				8
9	.028	.022	.035		-.315	-.348					-.262	-.246	-.259		-.226	-.307				9
10	.074	.026			-.329						-.176	-.235			-.166					10
11											-.205									11
							$\alpha = -12^\circ$				$\delta = 30^\circ$									
1	.158	.263	.012	-.107	-.046	-.060	-.243	.590									-.177			1
2	.333	.340	.376	.376	.371	.370	-.255	-.336			-.262		-.445		-.456	-.377	.031	-.328		2
3	.246	.241		.278	.295	.314	-.388	-.244			-.114	-.164	-.348		-.434	-.366	-.182	.084		3
4	.249	.227	.245	.225	.263	.354	-.384	-.398			-.099		-.190	-.270	-.368	-.348	-.155	-.050		4
5	.226	.223	.231	.018	.288	-.356		-.418			-.148	-.157	-.184	-.280	-.294			-.057		5
6	.218	.212	.222	-.045	-.018	-.355					-.121	-.165	-.138	-.312		-.331				6
7	.201	.218	.012	-.100	-.411	-.442					-.106	-.142	-.257	-.382	-.162	-.176				7
8	.202	.000	.022		-.403	-.445					-.065	-.251	-.247		-.208	-.113				8
9	.017	.016	.027		-.388	-.408					-.257	-.233	-.225		-.144	-.104				9
10	.070	.022			-.420						-.165	-.230			-.084					10
11											-.191									11

Table 4

Pressure Coefficients on Delta Wing with Control

Configuration B M = 1.61 R = 4.2×10^6

Orif	Upper Surface at Station 1	2	3	4	5	6	7	8	9	Lower Surface at Station 1	2	3	4	5	6	7	8	9	Orif
								α = 00°		δ = 00°									
1	.396	.380	.300	.274	.012	-.166	.019	-.004	-.01					.026	-.170	.161	.002	.008	1
2	.069	.045	.032	.028	.006	-.179	-.009	.004	.014	.076		.044		-.008	-.177	.006	.019	.034	2
3	.032	.026		.013	-.012	-.162	-.018	-.023	.004	.042	.022	.011		-.012	-.147	-.011	-.017	.026	3
4	.039	.007	-.005	-.008		-.153		-.202	-.261	.048		-.008	-.010		-.149		-.204	-.278	4
5	.023	.010	.009	-.159				-.177		.004	.012	-.011	-.145				-.202		5
6	.015	.012	.017	-.147						.023	.025	.013	-.135						6
7	.048	.034	-.146	-.145						.039	.023	-.143	-.147						7
8	.005	-.135	-.143							.008	-.132	-.145							8
9	-.140	-.144	-.128							-.140	-.141	-.138							9
10	-.090	-.142								-.099	-.146								10
11	-.135									-.143									11
								α = 00°		δ = 10°									
1	.390	.372	.294	.267	.013	-.386	-.080	-.124	-.303					.023	.024	.161	.125	.240	1
2	.060	.039	.026	.024	.147	-.403	-.348	-.126	-.315	.075		.043		.032	.027	.175	.235	.296	2
3	.028	.019		.003	.180	-.394	-.327	-.157	-.333	.038	.032	.008		-.015	-.013	.188	.186	.308	3
4	.032	.002	-.012	.056		-.327		-.310	-.387	.041		-.015	.064		-.036		-.055	-.011	4
5	.016	.003	.000	-.238				-.291		-.002	.005	-.011	-.066				-.019		5
6	.010	.010	.011	-.313						.018	.023	.008	-.082						6
7	.039	.031	-.095	-.296						.035	.020	-.146	-.145						7
8	.005	-.140	-.119							.002	-.134	-.109							8
9	-.145	-.150	-.138							-.146	-.140	-.070							9
10	-.093	-.132								-.103	-.153								10
11	-.140									-.147									11
								α = 00°		δ = 20°									
1	.395	.380	.301	.273	.014	-.457	-.153	-.432	-.437					.020	.219	.160	.284	.517	1
2	.068	.047	.034	.030	.069	-.463	-.433	-.224	-.427	.075		.041		.016	.177	.183	.533	.582	2
3	.038	.026		.008	.447	-.445	-.424	-.231	-.427	.038	.037	.008		.072	.157	.313	.425	.511	3
4	.035	.007	-.007	.128		-.395		-.370	-.435	.041		-.016	.217		.089		.143	.252	4
5	.025	.011	.007	-.270				-.365		.001	.004	-.010	-.026				.203		5
6	.017	.015	.018	-.351						.019	.022	.006	-.154						6
7	.051	.042	-.051	-.357						.034	.018	-.137	-.220						7
8	.011	-.134	-.100							.003	-.136	-.003							8
9	-.139	-.136	-.129							-.144	-.145	-.019							9
10	-.088	-.093								-.101	-.147								10
11	-.130									-.144									11
								α = 00°		δ = 30°									
1	.397	.383	.304	.272	.016	-.481	-.323	-.482	-.483					.016	.479	.159	.835	.777	1
2	.069	.049	.035	.033	.073	-.481	-.457	-.430	-.455	.069		.039		.039	.448	.500	.720	.832	2
3	.038	.026		.011	.601	-.464	-.465	-.368	-.434	.031	.039	.005		.157	.437	.601	.620	.625	3
4	.041	.009	-.008	.232		-.416		-.439	-.396	.036		-.018	.273		.391		.511	.552	4
5	.020	.011	.009	-.298				-.372		-.004	.003	-.016	-.011				.484		5
6	.015	.016	.084	-.383						.014	.018	.003	-.216						6
7	.049	.042	-.021	-.387						.030	.013	.011	-.279						7
8	.015	-.133	-.091							-.003	-.141	.048							8
9	-.139	-.093	-.127							-.147	-.142	.007							9
10	-.087	-.046								-.104	-.022								10
11	-.127									-.133									11
								α = 06°		δ = 00°									
1	.346	.126	.163	.009	-.411	-.269	-.349	-.373	-.394					.284	-.052	.196	.202	.230	1
2	-.061	-.240	-.317	-.354	-.256	-.273	-.273	-.331	-.379	.204		.238		.141	-.082	.166	.196	.249	2
3	-.045	-.069		-.133	-.093	-.251	-.163	-.307	-.381	.139	.145	.149		.102	-.048	.154	.130	.241	3
4	-.032	-.087	-.114	-.117		-.245		-.326	-.395	.165		.113	.093		-.055		-.084	-.070	4
5	-.075	-.080	-.096	-.249				-.271		.109	.113	.093	-.052				-.085		5
6	-.056	-.069	-.084	-.234						.113	.130	.113	-.048						6
7	-.021	-.030	-.216	-.232						.125	.120	-.061	-.062						7
8	-.064	-.195	-.212							.101	-.062	-.071							8
9	-.202	-.206	-.187							-.069	-.067	-.075							9
10	-.125	-.204								-.042	-.068								10
11	-.174									-.091									11

Table 4 Continued

Pressure Coefficients on Delta Wing with Control

Configuration B M = 1.61 R = 4.2×10^6

Orif	Upper Surface at Station 1	2	3	4	5	6	7	8	9	Lower Surface at Station 1	2	3	4	5	6	7	8	9	Orif
								α = 06°		δ = 10°									
1	.345	.131	.164	.012	-.344	-.408	-.360	-.429	-.438					.284	.175	.194	.370	.492	1
2	-.056	-.238	-.316	-.350	-.146	-.407	-.354	-.421	-.429	.210		.240		.141	.084	-.041	.527	.517	2
3	-.042	-.064		-.130	-.025	-.373	-.347	-.411	-.426	.145	.151	.151		.247	.079	.154	.390	.436	3
4	-.028	-.083	-.108	-.074		-.291		-.408	-.415	.170		.115	.280		.069		.133	.164	4
5	-.067	-.080	-.093	-.303				-.375		.118	.115	.091	.020				.125		5
6	-.056	-.064	-.078	-.339						.128	.134	.115	.014						6
7	-.020	-.026	-.190	-.313						.130	.124	-.058	-.069						7
8	-.060	-.188	-.182							.105	-.058	.005							8
9	-.203	-.198	-.192							-.059	-.062	.004							9
10	-.124	-.200								-.034	-.065								10
11	-.172									-.079									11
								α = 06°		δ = 20°									
1	.341	.127	.160	.008	-.343	-.454	-.428	-.441	-.456					.285	.437	.198	.527	.885	1
2	-.064	-.244	-.319	-.350	-.084	-.451	-.424	-.441	-.447	.207		.239		.141	.340	.373	.944	.772	2
3	-.052	-.073		-.127	.046	-.418	-.428	-.445	-.438	.137	.149	.151		.445	.301	.509	.677	.554	3
4	-.037	-.084	-.112	-.083		-.347		-.438	-.402	.168		.114	.382		.282		.474	.470	4
5	-.075	-.085	-.098	-.366				-.410		.110	.118	.090	.103				.419		5
6	-.061	-.073	-.047	-.408						.115	.131	.115	-.032						6
7	-.031	-.030	-.135	-.395						.125	.119	.047	-.138						7
8	-.068	-.194	-.187							.098	-.062	.086							8
9	-.208	-.189	-.209							-.067	-.064	.060							9
10	-.133	-.134								-.038	-.024								10
11	-.178									-.088									11
								α = 06°		δ = 30°									
1	.338	.118	.157	.008	-.178	-.475	-.456	-.464	-.475					.282	.592	.195	.926	1.175	1
2	-.067	-.248	-.323	-.357	-.014	-.468	-.466	-.462	-.459	.202		.237		.140	.605	.507	1.072	1.004	2
3	-.054	-.072		-.036	.041	-.397	-.462	-.464	-.450	.136	.147	.149		.455	.592	.690	.860	.831	3
4	-.040	-.084	-.120	-.123		-.361		-.456	-.426	.170		.111	.356		.460		.789	.672	4
5	-.077	-.082	-.099	-.364				-.409		.110	.115	.088	.134				.664		5
6	-.060	-.073	.056	-.403						.113	.130	.156	-.121						6
7	-.032	-.033	-.146	-.406						.124	.116	.146	-.174						7
8	-.075	-.160	-.216							.098	-.064	.130							8
9	-.211	-.123	-.243							-.070	.001	.087							9
10	-.127	-.117								-.037	.075								10
11	-.078									-.079									11
								α = 12°		δ = 00°									
1	.218	-.088	-.013	-.185	-.490	-.401	-.451	-.462	-.465					.395	.038	.182	.285	.361	1
2	-.270	-.417	-.455	-.470	-.451	-.368	-.434	-.453	-.446	.342		.392		.283	.017	.296	.335	.383	2
3	-.116	-.172		-.431	-.386	-.348	-.405	-.442	-.424	.272	.264	.285		.236	.056	.277	.255	.351	3
4	-.092	-.178	-.198	-.308		-.275		-.451	-.444	.290		.251	.223		.042		.028	.069	4
5	-.146	-.185	-.167	-.364				-.418		.241	.243	.219	.047				.023		5
6	-.127	-.169	-.151	-.387						.236	.262	.243	.051						6
7	-.111	-.110	-.259	-.345						.227	.237	.035	.031						7
8	-.137	-.259	-.264							.219	.032	.019							8
9	-.263	-.258	-.246							.036	.028	.023							9
10	-.178	-.256								.034	.024								10
11	-.228									.023									11
								α = 12°		δ = 10°									
1	.222	-.082	-.007	-.179	-.447	-.441	-.423	-.443	-.456					.394	.341	.182	.693	.660	1
2	-.268	-.413	-.461	-.482	-.378	-.387	-.429	-.442	-.439	.340		.390		.280	.269	.220	.713	.618	2
3	-.115	-.169		-.424	-.437	-.399	-.449	-.444	-.429	.265	.271	.282		.335	.265	.396	.510	.456	3
4	-.096	-.173	-.199	-.259		-.367		-.445	-.410	.285		.247	.311		.207		.298	.334	4
5	-.143	-.177	-.162	-.369				-.435		.236	.242	.216	.157				.259		5
6	-.123	-.164	-.125	-.394						.231	.258	.237	.128						6
7	-.110	-.112	-.244	-.303						.224	.230	.029	.010						7
8	-.134	-.254	-.254							.213	.025	.063							8
9	-.256	-.254	-.261							.033	.025	.096							9
10	-.175	-.238								.028	.016								10
11	-.225									.019									11

Table 4 Continued

Pressure Coefficients on Delta Wing with Control

Configuration B M = 1.61 R = 4.2×10^6

Orif	Upper Surface at Station 1	2	3	4	5	6	7	8	9	Lower Surface at Station 1	2	3	4	5	6	7	8	9	Orif
								$\alpha = 12^\circ$		$\delta = 20^\circ$									
1	.223	-.085	-.007	-.179	-.381	-.436	-.421	-.437	-.445					.399	.616	.182	.962	1.001	1
2	-.268	-.415	-.460	-.456	-.292	-.420	-.438	-.430	-.431	.346		.396		.290	.555	.409	1.042	.849	2
3	-.109	-.173		-.339	-.409	-.379	-.459	-.439	-.422	.275	.280	.286		.543	.505	.464	.779	.677	3
4	-.095	-.174	-.185	-.299		-.438		-.441	-.379	.295		.252	.476		.422		.656	.568	4
5	-.145	-.175	-.193	-.394				-.434		.243	.246	.222	.210				.548		5
6	-.123	-.144	-.124	-.339						.240	.262	.244	.098						6
7	-.110	-.101	-.272	-.294						.228	.237	.096	-.046						7
8	-.129	-.248	-.313							.219	.029	.177							8
9	-.245	-.241	-.304							.036	.032	.171							9
10	-.155	-.234								.036	.058								10
11	-.211									.024									11
								$\alpha = 12^\circ$		$\delta = 30^\circ$									
1	.228	-.081	-.007	-.180	-.281	-.431	-.441	-.448	-.451					.393	.827	.181	.968	1.279	1
2	-.269	-.416	-.454	-.408	-.207	-.419	-.451	-.438	-.431	.340		.390		.388	.866	.484	1.093	1.135	2
3	-.107	-.167		-.274	-.398	-.452	-.442	-.444	-.422	.265	.277	.283		.604	.806	.611	1.064	.953	3
4	-.093	-.173	-.211	-.349		-.459		-.443	-.374	.290		.245	.544		.657		.947	.721	4
5	-.146	-.172	-.133	-.399				-.425		.236	.240	.215	.286				.740		5
6	-.119	-.129	-.126	-.343						.231	.253	.278	.010						6
7	-.092	-.061	-.254	-.287						.220	.226	.212	-.106						7
8	-.087	-.227	-.299							.210	.023	.247							8
9	-.197	-.254	-.193							.030	.081	.200							9
10	-.101	-.263								.030	.153								10
11	-.147									.015									11
								$\alpha = -06^\circ$		$\delta = 00^\circ$									
1	.307	.395	.177	.162	.268	-.006	.276	.248	.255					-.390	-.284	.220	-.262	-.409	1
2	.195	.201	.224	.233	.150	-.049	.219	.203	.270	-.063		-.289		-.302	-.297	-.274	-.346	-.412	2
3	.133	.139		.135	.108	-.043	.197	.162	.283	-.047	.055	-.110		-.108	-.257	-.192	-.289	-.413	3
4	.138	.102	.116	.102		-.052		-.070	-.055	-.040		-.106	-.115		-.245		-.315	-.440	4
5	.121	.112	.114	-.042				-.043		-.082	-.080	-.122	-.262				-.308		5
6	.110	.113	.112	-.041						-.063	-.066	-.088	-.237						6
7	.135	.134	-.074	-.049						-.044	-.067	-.216	-.234						7
8	.107	-.070	-.075							-.066	-.200	-.210							8
9	-.060	-.078	-.064							-.216	-.204	-.204							9
10	-.031	-.070								-.157	-.209								10
11	-.070									-.181									11
								$\alpha = -06^\circ$		$\delta = 10^\circ$									
1	.307	.394	.179	.161	.271	-.300	.114	.061	.035					-.389	-.085	.223	-.211	-.134	1
2	.191	.196	.225	.237	.539	-.323	-.286	.005	.027	-.059		-.286		-.312	-.140	-.425	-.169	-.072	2
3	.130	.144		.139	.279	-.315	-.288	-.041	.001	-.043	.063	-.107		-.071	-.148	.027	-.107	-.050	3
4	.137	.107	.114	.179		-.312		-.216	-.303	-.035		-.105	-.090		-.148		-.186	-.312	4
5	.124	.113	.116	-.153				-.199		-.079	-.076	-.119	-.184				-.181		5
6	.111	.116	.130	-.254						-.062	-.063	-.088	-.171						6
7	.135	.135	-.005	-.247						-.042	-.063	-.216	-.216						7
8	.109	-.073	-.040							-.064	-.193	-.193							8
9	-.071	-.068	-.060							-.212	-.200	-.165							9
10	-.034	-.024								-.151	-.205								10
11	-.069									-.178									11
								$\alpha = -06^\circ$		$\delta = 20^\circ$									
1	.308	.400	.177	.161	.274	-.440	-.033	-.118	-.339					-.389	.150	.225	.143	.146	1
2	.197	.203	.223	.237	.271	-.442	-.397	-.112	-.309	-.060		-.285		-.313	.115	-.161	-.041	.224	2
3	.131	.146		.136	.571	-.444	-.409	-.145	-.309	-.041	-.053	-.109		-.138	.082	-.137	.109	.284	3
4	.139	.108	.115	.250		-.406		-.319	-.407	-.034		-.105	-.015		.101		-.006	.015	4
5	.127	.113	.114	-.194				-.313		-.082	-.077	-.115	-.159				.003		5
6	.110	.115	.157	-.290						-.061	-.064	-.087	-.246						6
7	.136	.136	.025	-.296						-.043	-.064	-.214	-.268						7
8	.112	-.070	-.033							-.066	-.194	-.129							8
9	-.068	-.044	-.062							-.211	-.198	-.103							9
10	-.031	-.001								-.150	-.203								10
11	-.066									-.174									11

Table 4 Concluded

Pressure Coefficients on Delta Wing with Control

Configuration B M = 1.61 R = 4.2×10^6

Orif	Upper Surface at Station 1	2	3	4	5	6	7	8	9	Lower Surface at Station 1	2	3	4	5	6	7	8	9	Orif
								$\alpha = -06^\circ$		$\delta = 30^\circ$									
1	.305	.395	.177	.157	.273	-.482	-.160	-.463	-.442					-.370	.281	.225	.549	.445	1
2	.193	.201	.221	.241	.157	-.478	-.460	-.255	-.431	-.063		-.291		-.223	.308	.494	.205	.433	2
3	.131	.143		.138	.697	-.478	-.457	-.242	-.420	-.045	-.066	-.109		-.066	.267	-.192	.339	.529	3
4	.139	.112	.113	.352		-.449		-.392	-.432	-.037		-.109	.022		.168		.207	.294	4
5	.123	.113	.117	-.203				-.365		-.082	-.081	-.124	-.154				.211		5
6	.108	.118	.185	-.311						-.064	-.066	-.089	-.284						6
7	.133	.136	.051	-.318						-.047	-.068	-.212	-.300						7
8	.110	-.072	-.018							-.070	-.198	-.058							8
9	-.069	-.021	-.057							-.220	-.202	-.064							9
10	-.037	.024								-.149	-.148								10
11	-.068									-.172									11
								$\alpha = -12^\circ$		$\delta = 00^\circ$									
1	.168	.265	.022	-.099	.387	.112	.473	.409	.402					-.493	-.429	.295	-.408	-.483	1
2	.342	.355	.379	.383	.300	.070	.387	.363	.424	-.270		-.452		-.449	-.406	-.459	-.471	-.462	2
3	.257	.255		.283	.238	.072	.364	.317	.413	-.119	-.184	-.351		-.411	-.363	-.431	-.454	-.428	3
4	.261	.239	.249	.230		.060		.057	.114	-.107		-.189	-.292		-.336		-.445	-.420	4
5	.240	.239	.248	.065				.079		-.150	-.166	-.190	-.351				-.437		5
6	.234	.243	.245	.064						-.132	-.170	-.157	-.378						6
7	.243	.253	.026	.064						-.124	-.149	-.258	-.321						7
8	.234	.020	.016							-.123	-.255	-.261							8
9	.032	.024	.026							-.267	-.254	-.250							9
10	.060	.035								-.194	-.254								10
11	.033									-.215									11
								$\alpha = -12^\circ$		$\delta = 10^\circ$									
1	.164	.265	.028	-.097	.383	-.271	.249	.187	.168					-.497	-.403	.294	-.367	-.297	1
2	.338	.355	.381	.382	.735	-.257	-.200	.112	.185	-.273		-.453		-.435	-.421	-.490	-.399	-.340	2
3	.259	.254		.283	.426	-.202	-.236	.067	.191	-.118	-.184	-.353		-.399	-.335	-.451	-.418	-.347	3
4	.261	.240	.249	.304		-.210		-.140	-.134	-.110		-.193	-.277		-.323		-.462	-.424	4
5	.238	.237	.250	-.074				-.113		-.152	-.168	-.189	-.347				-.438		5
6	.232	.243	.308	-.189						-.130	-.172	-.161	-.321						6
7	.243	.252	.089	-.191						-.129	-.150	-.261	-.322						7
8	.234	.027	.045							-.125	-.256	-.229							8
9	.038	.071	.027							-.270	-.256	-.237							9
10	.060	.089								-.193	-.255								10
11	.034									-.209									11
								$\alpha = -12^\circ$		$\delta = 20^\circ$									
1	.165	.263	.025	-.099	.392	-.389	.134	.058	-.142					-.495	-.430	.295	-.036	-.033	1
2	.346	.355	.380	.385	.713	-.411	-.336	.003	-.058	-.269		-.451		-.453	-.435	-.300	-.283	.013	2
3	.257	.253		.288	.681	-.420	-.371	-.079	-.098	-.118	-.184	-.352		-.357	-.369	-.488	-.331	.047	3
4	.262	.239	.253	.378		-.408		-.251	-.337	-.107		-.192	-.208		-.307		-.338	-.222	4
5	.240	.242	.253	-.107				-.245		-.149	-.165	-.187	-.330				-.347		5
6	.237	.245	.342	-.216						-.129	-.168	-.155	-.340						6
7	.247	.258	.122	-.225						-.123	-.148	-.258	-.367						7
8	.239	.028	.056							-.126	-.257	-.130							8
9	.037	.099	.026							-.266	-.254	-.203							9
10	.059	.106								-.187	-.252								10
11	.040									-.201									11
								$\alpha = -12^\circ$		$\delta = 30^\circ$									
1	.160	.262	.021	-.103	.390	-.460	-.043	-.290	-.354					-.493	-.361	1.828	-.329	-.118	1
2	.335	.352	.379	.381	.313	-.468	-.426	-.140	-.417	-.269		-.452		-.457	-.318	.301	.463	.226	2
3	.257	.251		.284	.825	-.463	-.445		-.349	-.121	-.185	-.354		-.313	-.394	.437	.010	.262	3
4	.258	.235	.250	.484		-.453		-.197	-.339	-.109		-.193	-.146		-.373		-.195	.327	4
5	.236	.237	.252	-.118				-.348		-.150	-.167	-.191	-.329				-.261		5
6	.232	.242	.369	-.244						-.129	-.174	-.157	-.347						6
7	.242	.256	.141	-.252						-.127	-.148	-.262	-.430						7
8	.234	.026	.071							-.126	-.258	-.133							8
9	.033	.118	.027							-.265	-.254	-.175							9
10	.053	.120								-.184	-.254								10
11	.035									-.195									11

Table 5

Pressure Coefficients on Delta Wing with Control

Configuration c M = 1.61 R = 4.2×10^6

Orif	Upper Surface at Station 1	2	3	4	5	6	7	8	9	Lower Surface at Station 1	2	3	4	5	6	7	8	9	Orif
								α = 00°		δ = 00°									
1	.390	.359	.295	.274	-.138	.014	.335	.341	.032					-.108	.015			.012	1
2	.056	.043	.032	.032	-.185	.003	.030	.018	.000	.072		.039		-.115	-.004	-.012	.012	.001	2
3	.029	.023		.009	-.149	.001	-.002	.010	-.284	.034	.003	.007		-.181	-.037	-.002	-.007	-.287	3
4	.035	.006	-.012	-.012	-.155		-.104	-.211		.039		-.016	-.013	-.169		-.055	-.204		4
5	.011	.011	.011	-.157				-.234		-.004	.005	-.033	-.163				-.203		5
6	.016	.012	.002	-.150						.014	.006	.001	-.157						6
7	.038	.020	-.150	-.152						.029	.012	-.150	-.170						7
8	.004	-.146	-.150							-.013	-.157	-.176							8
9	-.148	-.141	-.135							-.155	-.172	-.155							9
10	-.112	-.148								-.107	-.157								10
11	-.161									-.151									11
								α = 00°		δ = 10°									
1	.389	.356	.297	.274	-.328	.017	.369	.050	-.339					.232	.012			.271	1
2	.056	.043	.031	.033	-.335	-.041	-.031	-.287	-.369	.071		.038		.073	.062	.139	.256	.272	2
3	.027	.021		.010	-.295	-.071	-.086	-.111	-.393	.029	.014	.007		-.040	.021	.184	.149	-.034	3
4	.032	.002	-.012	-.043	-.271		-.246	-.284		.036		-.015	.033	-.058		.088	-.092		4
5	.011	.008	.010	-.216				-.336		-.002	.005	-.033	-.075				-.029		5
6	.016	.012	.003	-.225						.012	.007	.003	-.102						6
7	.038	.023	-.145	-.234						.024	.013	-.159	-.176						7
8	.003	-.146	-.159							-.012	-.158	-.157							8
9	-.149	-.140	-.153							-.157	-.174	-.110							9
10	-.115	-.144								-.110	-.159								10
11	-.164									-.155									11
								α = 00°		δ = 20°									
1	.389	.357	.294	.276	-.443	.016	.162	-.263	-.383					.654	.010			.500	1
2	.057	.042	.032	.030	-.450	.283	-.080	-.370	-.415	.065		.035		.305	.024	.513	.539	.469	2
3	.028	.023		.012	-.399	-.279	-.159	-.351	-.433	.029	.014	.003		.187	.111	.446	.343	.210	3
4	.031	.004	-.012	-.025	-.413		-.342	-.347		.033		-.021	.082	.132		.207	.096		4
5	.007	.007	.012	-.250				-.397		-.008	.000	-.037	.010				.187		5
6	.015	.008	.003	-.295						.010	.001	-.001	-.141						6
7	.039	.021	-.114	-.284						.026	.008	-.165	-.238						7
8	.004	-.146	-.150							-.014	-.160	-.071							8
9	-.151	-.141	-.155							-.159	-.175	-.031							9
10	-.117	-.133								-.111	-.162								10
11	-.166									-.156									11
								α = 00°		δ = 30°									
1	.390	.359	.299	.280	-.481	.022	-.152	-.388	-.424					1.248	.013			.730	1
2	.063	.051	.038	.042	-.484	.490	-.321	-.453	-.421	.071		.039		.621	-.025	.844	.834	.589	2
3	.031	.030		.018	-.455	-.337	-.267	-.434	-.398	.035	.023	.011		.483	.257	.747	.628	.561	3
4	.034	.009	-.006	.069	-.421		-.427	-.439		.041		-.014	.270	.411		.504	.510		4
5	.012	.012	.016	-.273				-.424		.000	.005	-.031	.058				.466		5
6	.020	.017	.032	-.333						.016	.007	.003	-.193						6
7	.043	.028	-.069	-.341						.029	.014	-.106	-.274						7
8	.009	-.139	-.129							-.013	-.152	.020							8
9	-.140	-.116	-.145							-.154	-.172	.006							9
10	-.110	-.083								-.103	-.077								10
11	-.155									-.144									11
								α = 06°		δ = 00°									
1	.341	.097	.155	.005	-.228	-.373	.060	-.055	-.378					-.002	.227			.235	1
2	-.073	-.251	-.325	-.359	-.304	-.293	-.340	-.379	-.393	.205		.234		-.030	.141	.217	.239	.234	2
3	-.055	-.070		-.127	-.248	-.078	-.312	-.331	-.402	.138	.143	.154		-.080	.098	.167	.154	-.080	3
4	-.031	-.088	-.116	-.130	-.251		-.259	-.390		.181		.114	.116	-.076		.107	-.085		4
5	-.081	-.083	-.096	-.235				-.351		.104	.114	.085	-.083				-.090		5
6	-.062	-.077	-.087	-.238						.114	.116	.116	-.074						6
7	-.039	-.060	-.211	-.249						.118	.114	-.067	-.085						7
8	-.075	-.203	-.214							.092	-.077	-.098							8
9	-.204	-.202	-.201							-.074	-.100	-.075							9
10	-.170	-.206								-.049	-.078								10
11	-.198									-.083									11

Table 5 Continued

Pressure Coefficients on Delta Wing with Control

Configuration c M = 1.61 R = 4.2×10^6

Orif	Upper Surface at Station 1	2	3	4	5	6	7	8	9	Lower Surface at Station 1	2	3	4	5	6	7	8	9	Orif
								α = 06°			δ = 10°								
1	.339	.088	.150	.002	-.388	-.347	.230	-.266	-.452					.408	.230			.452	1
2	-.079	-.260	-.329	-.365	-.349	-.467	-.419	-.457	-.457	.207		.240		.187	.202	.322	.523	.421	2
3	-.061	-.077		-.130	-.352	-.163	-.336	-.453	-.393	.141	.151	.154		.104	.221	.424	.375	.164	3
4	-.038	-.093	-.119	-.184	-.284		-.313	-.467		.185		.111	.164	.082		.323	.096		4
5	-.083	-.087	-.097	-.290				-.443		.109	.115	.087	.060				.126		5
6	-.070	-.078	-.068	-.303						.121	.120	.113	.020						6
7	-.049	-.067	-.200	-.301						.122	.113	-.073	-.087						7
8	-.080	-.207	-.229							.094	-.073	-.076							8
9	-.208	-.201	-.232							-.073	-.095	-.005							9
10	-.181	-.194								-.043	-.077								10
11	-.204									-.079									11
								α = 06°			δ = 20°								
1	.338	.092	.153	.004	-.465	-.348	.038	-.367	-.464					.757	.227			.700	1
2	-.076	-.258	-.327	-.363	-.451	.265	-.463	-.452	-.438	.201		.237		.468	.034	.477	.841	.535	2
3	-.059	-.074		-.120	-.375	-.371	-.389	-.474	-.390	.139	.155	.151		.351	.434	.591	.659	.483	3
4	-.037	-.092	-.119	-.193	-.339		-.408	-.444		.185		.112	.323	.288		.569	.439		4
5	-.081	-.089	-.098	-.328				-.441		.105	.118	.087	.136				.383		5
6	-.070	-.079	.008	-.356						.121	.115	.114	-.007						6
7	-.047	-.068	-.179	-.369						.120	.116	-.072	-.121						7
8	-.082	-.203	-.233							.093	-.076	.053							8
9	-.208	-.156	-.217							-.074	-.095	.060							9
10	-.184	-.168								-.042	-.079								10
11	-.194									-.083									11
								α = 12°			δ = 00°								
1	.198	-.117	-.035	-.196	-.447	-.484	-.322	-.334	-.464					.098	.369			.377	1
2	-.304	-.432	-.470	-.482	-.413	-.497	-.466	-.478	-.441	.356		.409		.058	.287	.343	.387	.354	2
3	-.131	-.190		-.441	-.346	-.449	-.423	-.464	-.453	.283	.281	.297		.031	.244	.317	.333	.083	3
4	-.098	-.194	-.268	-.343	-.333		-.436	-.471		.309		.262	.262	.031		.238	.035		4
5	-.159	-.196	-.217	-.370				-.432		.244	.254	.223	.018				.028		5
6	-.139	-.171	-.168	-.354						.252	.252	.252	.031						6
7	-.123	-.144	-.262	-.308						.221	.243	.036	.018						7
8	-.146	-.271	-.267							.225	.024	-.002							8
9	-.264	-.258	-.246							.037	.000	.026							9
10	-.251	-.267								.016	.023								10
11	-.225									.035									11
								α = 12°			δ = 10°								
1	.196	-.119	-.034	-.195	-.414	-.478	.025	-.406	-.413					.557	.369			.595	1
2	-.301	-.431	-.471	-.481	-.421	-.492	-.421	-.419	-.398	.352		.409		.290	.283	.555	.687	.461	2
3	-.131	-.191		-.405	-.438	-.449	-.418	-.427	-.346	.277	.284	.292		.246	.470	.409	.582	.375	3
4	-.097	-.191	-.267	-.272	-.398		-.428	-.418		.305		.261	.316	.204		.347	.315		4
5	-.163	-.199	-.217	-.333				-.425		.237	.250	.219	.185				.269		5
6	-.144	-.172	-.141	-.334						.248	.250	.246	.143						6
7	-.125	-.142	-.243	-.323						.217	.240	.021	.012						7
8	-.148	-.270	-.282							.223	.020	.041							8
9	-.268	-.236	-.285							.034	-.005	.113							9
10	-.252	-.245								.016	.014								10
11	-.222									.030									11
								α = 12°			δ = 20°								
1	.196	-.119	-.036	-.192	-.437	-.430	-.173	-.425	-.437					.832	.364			.803	1
2	-.304	-.432	-.473	-.461	-.444	.068	-.418	-.433	-.425	.349		.405		.596	.150	.741	1.024	.659	2
3	-.129	-.192		-.340	-.444	-.472	-.431	-.448	-.372	.275	.282	.291		.507	.703	.524	.838	.591	3
4	-.097	-.192	-.181	-.385	-.435		-.446	-.442		.304		.255	.504	.438		.669	.642		4
5	-.159	-.197	-.165	-.420				-.448		.238	.251	.216	.235				.544		5
6	-.142	-.159	-.136	-.399						.245	.247	.246	.102						6
7	-.125	-.121	-.267	-.281						.214	.235	.032	-.034						7
8	-.141	-.244	-.278							.216	.017	.166							8
9	-.255	-.227	-.283							.032	-.006	.174							9
10	-.222	-.236								.013	.019								10
11	-.179									.028									11

Table 5 Continued

Pressure Coefficients on Delta Wing with Control

Configuration c M = 1.61 R = 4.2 x 10^6

Orif	Upper Surface at Station 1	2	3	4	5	6	7	8	9	Lower Surface at Station 1	2	3	4	5	6	7	8	9	Orif
								α = 12°		δ = 30°									
1	.199	-.107	-.025	-.182	-.430	-.345	-.291	-.441	-.418					1.016	.369			1.018	1
2	-.298	-.423	-.441	-.282	-.438	.411	-.453	-.427	-.414	.349		.409		.954	.170	1.078	1.254	.885	2
3	-.124	-.185		-.281	-.469	-.471	-.425	-.432	-.395	.279	.284	.292		.785	.966	.767	1.162	.721	3
4	-.092	-.187	-.249	-.355	-.446		-.432	-.425		.306		.261	.597	.651		.962	.975		4
5	-.151	-.163	-.080	-.389				-.432		.239	.252	.217	.343				.759		5
6	-.134	-.144	-.092	-.369						.246	.249	.265	.050						6
7	-.093	-.074	-.210	-.363						.215	.238	.227	-.067						7
8	-.104	-.217	-.276							.219	.020	.245							8
9	-.216	-.231	-.165							.035	.040	.208							9
10	-.168	-.226								.015	.164								10
11	-.128									.031									11
								α = 15°		δ = 00°									
1	.142	-.174	-.151	-.235	-.453	-.498	-.387	-.394	-.406					.171	.445			.458	1
2	-.356	-.445	-.471	-.473	-.437	-.494	-.421	-.448	-.389	.419		.457		.112	.385	.407	.463	.377	2
3	-.147	-.238		-.448	-.428	-.451	-.435	-.417	-.344	.343	.349	.364		.107	.345	.410	.432	.179	3
4	-.107	-.218	-.382	-.327	-.380		-.404	-.407		.362		.359	.365	.107		.316	.104		4
5	-.180	-.214	-.310	-.387				-.406		.309	.338	.336	.084				.104		5
6	-.160	-.201	-.207	-.344						.326	.358	.356	.100						6
7	-.139	-.165	-.277	-.264						.321	.356	.119	.094						7
8	-.160	-.284	-.281							.332	.100	.073							8
9	-.274	-.279	-.269							.121	.074	.089							9
10	-.256	-.273								.074	.094								10
11	-.223									.124									11
								α = 15°		δ = 10°									
1	.141	-.177	-.159	-.246	-.407	-.445	-.058	-.429	-.401					.637	.445			.662	1
2	-.355	-.449	-.483	-.472	-.436	-.450	-.392	-.408	-.379	.415		.455		.363	.395	.626	.800	.480	2
3	-.149	-.237		-.373	-.428	-.427	-.406	-.412	-.328	.341	.350	.363		.338	.620	.390	.673	.451	3
4	-.109	-.219	-.391	-.342	-.398		-.413	-.408		.362		.355	.448	.298		.394	.414		4
5	-.180	-.217	-.312	-.370				-.415		.305	.335	.330	.269				.371		5
6	-.163	-.200	-.151	-.375						.324	.354	.347	.237						6
7	-.138	-.165	-.291	-.313						.319	.351	.104	.088						7
8	-.164	-.273	-.325							.326	.094	.140							8
9	-.273	-.240	-.330							.117	.063	.185							9
10	-.256	-.238								.070	.083								10
11	-.210									.120									11
								α = 15°		δ = 20°									
1	.138	-.183	-.162	-.247	-.437	-.432	-.229	-.437	-.430					.905	.440			.865	1
2	-.358	-.451	-.458	-.382	-.443	.006	-.428	-.432	-.415	.413		.452		.673	.241	.834	1.133	.734	2
3	-.151	-.247		-.356	-.440	-.484	-.425	-.443	-.370	.337	.345	.359		.607	.819	.432	.984	.636	3
4	-.114	-.214	-.405	-.397	-.436		-.445	-.435		.355		.353	.626	.526		.764	.772		4
5	-.184	-.197	-.337	-.442				-.445		.301	.333	.324	.330				.632		5
6	-.168	-.190	-.198	-.413						.318	.349	.343	.178						6
7	-.140	-.162	-.269	-.347						.316	.349	.155	.037						7
8	-.153	-.247	-.289							.320	.093	.259							8
9	-.266	-.242	-.284							.110	.063	.255							9
10	-.251	-.264								.066	.123								10
11	-.159									.110									11
								α = 15°		δ = 30°									
1	.140	-.177	-.156	-.233	-.436	-.389	-.309	-.433	-.423					1.071	.440			1.088	1
2	-.356	-.423	-.360	-.282	-.445	.336	-.440	-.429	-.411	.418		.451		1.024	.347	1.134	1.360	.929	2
3	-.144	-.332		-.310	-.442	-.485	-.425	-.435	-.370	.341	.348	.361		.875	1.037	.777	1.270	.758	3
4	-.111	-.297	-.260	-.377	-.437		-.438	-.430		.359		.353	.728	.731		1.030	1.062		4
5	-.180	-.156	-.147	-.406				-.445		.303	.336	.327	.403				.807		5
6	-.148	-.129	-.169	-.367						.324	.351	.397	.121						6
7	-.111	-.090	-.230	-.353						.317	.347	.321	-.004						7
8	-.114	-.257	-.251							.324	.095	.331							8
9	-.212	-.264	-.195							.112	.174	.288							9
10	-.184	-.046								.070	.258								10
11	-.154									.121									11

Table 5 Continued

Pressure Coefficients on Delta Wing with Control

Configuration C · M = 1.61 R = 4.2×10^6

Orif	Upper Surface at Station 1	2	3	4	5	6	7	8	9	Lower Surface at Station 1	2	3	4	5	6	7	8	9	Orif
								$\alpha = -06^\circ$		$\delta = 00^\circ$									
1	.297	.359	.169	.157	-.035	.234	.123	.172	.264					-.211	-.368			-.404	1
2	.200	.213	.238	.256	-.073	.140	.263	.241	.243	-.081		-.312		-.182	-.288	-.355	-.363	-.410	2
3	.138	.148		.148	-.052	.146	.157	.180	-.071	-.057	-.089	-.116		-.268	-.118	-.289	-.330	-.410	3
4	.145	.106	.128	.127	-.062		.047	-.084		-.049		-.118	-.133	-.266		-.207	-.383		4
5	.117	.122	.129	-.079				-.126		-.092	-.093	-.126	-.241				-.358		5
6	.122	.124	.115	-.064						-.076	-.085	-.100	-.249						6
7	.140	.128	-.063	-.059						-.059	-.081	-.226	-.264						7
8	.108	-.066	-.061							-.098	-.219	-.245							8
9	-.069	-.064	-.047							-.224	-.233	-.228							9
10	-.039	-.065								-.171	-.222								10
11	-.090									-.196									11
								$\alpha = -06^\circ$		$\delta = 10^\circ$									
1	.303	.368	.174	.160	-.283	.238	.442	.266	.042					.030	-.365			-.038	1
2	.209	.219	.244	.256	-.296	.166	.152	.037	-.013	-.076		-.307		-.039	-.377	.127	-.056	-.028	2
3	.141	.156		.151	-.243	.039	-.004	.034	-.309	-.051	-.089	-.115		-.168	-.267	-.447	-.213	-.293	3
4	.155	.115	.133	.123	-.237		-.194	-.198		-.044		-.112	-.101	-.161		-.175	-.343		4
5	.125	.129	.136	-.129				-.260		-.089	-.088	-.135	-.211				-.190		5
6	.127	.132	.129	-.172						-.070	-.083	-.094	-.224						6
7	.144	.137	-.047	-.178						-.053	-.076	-.204	-.264						7
8	.113	-.059	-.059							-.093	-.209	-.222							8
9	-.067	-.053	-.054							-.220	-.228	-.209							9
10	-.033	-.047								-.169	-.215								10
11	-.083									-.192									11
								$\alpha = -06^\circ$		$\delta = 20^\circ$									
1	.302	.370	.178	.162	-.414	.237	.211	-.202	-.311					.257	-.369			.203	1
2	.205	.222	.246	.264	-.429	.256	.053	-.310	-.320	-.081		-.310		.177	-.326	.516	.226	.233	2
3	.143	.156		.155	-.392	.007	-.110	-.067	-.414	-.050	-.088	-.115		.066	-.356	.201	-.083	-.044	3
4	.160	.117	.132	.109	-.396		-.288	-.273		-.042		-.117	-.048	.021		-.133	-.221		4
5	.124	.127	.137	-.137				-.361		-.090	-.092	-.135	-.161				-.003		5
6	.129	.130	.125	-.202						-.071	-.082	-.099	-.253						6
7	.145	.140	-.038	-.214						-.052	-.075	-.208	-.318						7
8	.115	-.056	-.065							-.095	-.212	-.191							8
9	-.065	-.052	-.060							-.222	-.231	-.146							9
10	-.032	-.043								-.164	-.216								10
11	-.083									-.193									11
								$\alpha = -06^\circ$		$\delta = 30^\circ$									
1	.304	.365	.174	.159	-.463	.238	-.103	-.390	-.378					.806	-.372			.428	1
2	.205	.220	.244	.260	-.472	.497	-.063	-.429	-.393	-.077		-.313		.323	-.320	.829	.483	.458	2
3	.140	.151		.156	-.453	-.114	-.224	-.228	-.432	-.057	-.089	-.119		.291	-.228	.546	.100	.210	3
4	.162	.112	.129	.169	-.454		-.383	-.337		-.044		-.119	.005	.241		.017	-.040		4
5	.122	.121	.135	-.167				-.398		-.088	-.091	-.137	-.149				.229		5
6	.122	.125	.123	-.228						-.072	-.084	-.100	-.292						6
7	.140	.132	.000	-.246						-.055	-.079	-.215	-.348						7
8	.111	-.059	-.051							-.101	-.215	-.088							8
9	-.067	-.054	-.064							-.226	-.232	-.093							9
10	-.036	-.025								-.169	-.185								10
11	-.090									-.194									11
								$\alpha = -12^\circ$		$\delta = 00^\circ$									
1	.176	.257	.027	-.088	.060	.369	-.055	-.079	.405					-.405	-.470			-.447	1
2	.349	.352	.382	.391	.031	.275	.402	.373	.354	-.275		-.435		-.240	-.487	-.439	-.403	-.437	2
3	.253	.252		.287	.053	.279	.302	.326	.070	-.115	-.195	-.350		-.371	-.453	-.397	-.434	-.442	3
4	.288	.239	.255	.253	.041		.167	.023		-.095		-.195	-.324	-.300		-.402	-.437		4
5	.233	.240	.251	.008				-.030		-.154	-.164	-.173	-.338				-.419		5
6	.228	.242	.231	.036						-.128	-.168	-.156	-.332						6
7	.233	.239	.025	.041						-.121	-.156	-.254	-.300						7
8	.223	.023	.030							-.153	-.267	-.281							8
9	.016	.030	.050							-.264	-.275	-.267							9
10	.038	.025								-.195	-.262								10
11	-.006									-.222									11

Table 5 Concluded

Pressure Coefficients on Delta Wing with Control

Configuration C M = 1.61 R = 4.2×10^6

Orif	Upper Surface at Station 1	2	3	4	5	6	7	8	9	Lower Surface at Station 1	2	3	4	5	6	7	8	9	Orif
								$\alpha = -12^\circ$		$\delta = 10^\circ$									
1	.174	.251	.021	-.098	-.233	.363	.492	.266	.204					-.429	-.479			-.256	1
2	.343	.349	.375	.378	-.250	.397	.279	.199	.175	-.275		-.452		-.255	-.514	.214	-.163	-.292	2
3	.254	.245		.278	-.210	.143	-.053	.137	-.143	-.120	-.186	-.358		-.382	-.487	-.469	-.343	-.408	3
4	.282	.233	.246	.235	-.189		-.127	-.163		-.098		-.196	-.297	-.382		-.412	-.441		4
5	.230	.230	.239	-.054				-.203		-.154	-.170	-.182	-.279				-.422		5
6	.224	.237	.246	-.110						-.132	-.171	-.158	-.343						6
7	.228	.233	.031	-.118						-.120	-.158	-.232	-.307						7
8	.217	.018	.019							-.155	-.269	-.265							8
9	.007	.036	.020							-.267	-.279	-.267							9
10	.031	.033								-.199	-.265								10
11	-.007									-.223									11
								$\alpha = -12^\circ$		$\delta = 20^\circ$									
1	.193	.271	.038	-.080	-.370	.370	.269	-.173	-.085					-.399	-.479			.059	1
2	.361	.364	.394	.395	-.384	.354	.168	-.198	-.112	-.273		-.454		-.264	-.515	.553	.129	.076	2
3	.270	.263		.296	-.360	.161	-.082	.023	-.363	-.118	-.182	-.358		-.432	-.490	.237	-.248	-.188	3
4	.306	.251	.264	.253	-.347		-.266	-.248		-.099		-.197	-.226	-.359		-.448	-.388		4
5	.248	.251	.261	-.045				-.338		-.153	-.169	-.177	-.360				-.389		5
6	.241	.254	.263	-.129						-.133	-.169	-.157	-.355						6
7	.247	.251	.055	-.145						-.119	-.156	-.229	-.363						7
8	.237	.035	.032							-.154	-.275	-.229							8
9	.026	.054	.038							-.268	-.279	-.220							9
10	.049	.058								-.196	-.265								10
11	.007									-.223									11
								$\alpha = -12^\circ$		$\delta = 30^\circ$									
1	.180	.252	.021	-.095	-.430	.368	-.069	-.368	-.284					-.342	-.477			.258	1
2	.344	.349	.381	.383	-.439	.555	.012	-.373	-.302	-.271		-.455		-.281	-.502	.857	.425	.295	2
3	.256	.251		.284	-.422	.272	-.167	-.060	-.408	-.121	-.187	-.356		-.427	-.471	.618	-.135	.042	3
4	.288	.237	.253	.281	-.424		-.351	-.310		-.095		-.198	-.187	-.396		-.454	-.305		4
5	.235	.242	.250	-.057				-.396		-.155	-.170	-.180	-.345				-.285		5
6	.230	.244	.246	-.147						-.133	-.171	-.159	-.364						6
7	.232	.238	.068	-.169						-.119	-.160	-.241	-.381						7
8	.225	.022	.030							-.156	-.273	-.196							8
9	.014	.049	.021							-.268	-.278	-.192							9
10	.035	.065								-.193	-.266								10
11	.001									-.222									11

Table 6

Pressure Coefficients on Delta Wing with Control

Configuration D M = 1.61 R = 4.2 x 10^6

Orif	Upper Surface at Station 1	2	3	4	5	6	7	8	9		Lower Surface at Station 1	2	3	4	5	6	7	8	9	Orif
								α = 00°			δ = 00°									
1	.383	.349	.289	.276	.318	.318		.029												1
2	.059	.043	.032	.030	.031	.029	.033				.047		.033		-.029	.023	.035			2
3	.024	.023		.018	.018	1.734	.015				.010	.013	.000		.029	-.001	.013			3
4	.034	.011	-.014	.002	-.001	-.001	.018				.018		-.022	-.012	.001	-.018	-.007			4
5	.011	.006	.005	-.147	-.010	-.016	-.105				-.006	-.002	-.017	-.154	-.013	-.038	-.172			5
6	.020	.052	.016	-.157	-.139	-.170					.003	.016	.018	-.146	-.165	-.172				6
7	.032	.028	-.146	-.159	-.155						.003	.014	-.151	-.140	-.149					7
8	.009	-.138	-.133								.003	-.142	-.146							8
9	.224	-.137	-.151								-.142	-.144	-.139							9
10	-.062	-.137									-.085	-.144								10
11	-.137										-.143									11
								α = 00°			δ = 05°									
1	.389	.352	.293	.281	.290	.279		-.230												1
2	.065	.054	.041	.034	-.056	-.180	-.203				.067		.048		.124	.144	.169			2
3	.033	.031		-.012	-.022	1.736	-.088				.031	.029	.008		.137	.069	.134			3
4	.039	.018	-.003	-.038	-.040	-.058	-.073				.037		-.013	.022	.058	.069	.086			4
5	.016	.016	-.007	-.172	-.040	-.069	-.159				.001	.003	.006	-.145	.024	.037	-.090			5
6	.018	.061	-.002	-.174	-.174	-.196					.029	.028	.041	-.142	-.129	-.127				6
7	.039	.025	-.155	-.174	-.178						.016	.029	-.118	-.150	-.114					7
8	.021	-.141	-.156								.016	-.128	-.118							8
9	.230	-.141	-.156								-.136	-.115	-.118							9
10	-.062	-.155									-.077	-.115								10
11	-.133										-.123									11
								α = 00°			δ = 10°									
1	.383	.354	.281	.279	.299	.209		-.345												1
2	.065	.047	.033	.032	-.038	-.298	-.316				.067		.035		.234	.294	.284			2
3	.029	.022		-.110	-.050	1.739	-.244				.033	.031	.012		.354	.170	.235			3
4	.038	.014	-.006	-.056	-.075	-.095	-.166				.033		-.023	.017	.120	.145	.184			4
5	.017	.013	-.003	-.174	-.078	-.105	-.167				-.006	.007	-.007	-.161	.057	.101	-.047			5
6	.020	.056	-.029	-.191	-.204	-.227					.020	.019	.067	-.202	-.092	-.077				6
7	.039	.027	-.177	-.190	-.229						.018	.020	-.101	-.168	-.071					7
8	.014	-.154	-.178								.010	-.115	-.101							8
9	.213	-.161	-.174								-.136	-.101	-.107							9
10	-.060	-.161									-.074	-.102								10
11	-.131										-.129									11
								α = 00°			δ = 15°									
1	.388	.352	.289	.284	.303	.115		-.362												1
2	.070	.054	.042	.043	-.265	-.323	-.351				.072		.043		.335	.414	.407			2
3	.032	.032		-.119	-.085	1.738	-.303				.036	.035	.001		.322	.303	.355			3
4	.043	.014	-.002	-.114	-.133	-.111	-.299				.039		-.018	-.014	.223	.226	.295			4
5	.025	.014	.017	-.185	-.136	-.133	-.331				.001	.007	.001	-.205	.120	.179	.022			5
6	.017	.059	-.058	-.194	-.215	-.232					.022	.029	.108	-.244	-.048	-.005				6
7	.044	.044	-.199	-.190	-.266						.021	.024	-.078	-.196	.002					7
8	.020	-.145	-.199								.007	-.092	-.077							8
9	.209	-.162	-.197								-.131	-.077	-.094							9
10	-.047	-.180									-.078	-.082								10
11	-.120										-.108									11
								α = 00°			δ = 20°									
1	.388	.352	.288	.280	.305	.039		-.390												1
2	.066	.048	.038	.035	-.355	-.367	-.379				.064		.033		.482	.502	.530			2
3	.032	.029		.123	-.126	1.739	-.370				.035	.029	.003		.481	.434	.473			3
4	.042	.012	-.006	-.218	-.180	-.264	-.385				.037		-.011	-.094	.372	.337	.419			4
5	.022	.012	.055	-.221	-.184	-.200	-.392				-.004	.001	.000	-.211	.189	.284	.120			5
6	.014	.055	-.074	-.195	-.244	-.256					.021	.018	.134	-.245	.029	.079				6
7	.038	.054	-.235	-.194	-.317						.014	.022	-.058	-.221	.074					7
8	.015	-.143	-.227								.003	-.071	-.069							8
9	.214	-.173	-.227								-.137	-.056	-.087							9
10	-.043	-.186									-.072	-.062								10
11	-.111										-.076									11

Table 6 Continued

Pressure Coefficients on Delta Wing with Control

Configuration D M = 1.61 R = 4.2×10^6

Orif	Upper Surface at Station 1	2	3	4	5	6	7	8	9		Lower Surface at Station 1	2	3	4	5	6	7	8	9	Orif
								α = 00°			δ = 25°									
1	.395	.356	.298	.287	.290	-.032		-.407												1
2	.073	.058	.043	.035	-.392	-.400	-.393				.051		.035		.639	.664	.630			2
3	.043	.034		.403	-.178	1.743	-.388				.024	.033	-.007		.647	.600	.600			3
4	.044	.020	-.002	-.304	-.199	-.337	-.412				.032		-.018	-.164	.524	.445	.532			4
5	.030	.021	.110	-.279	-.223	-.286	-.412				-.015	-.003	.003	-.231	.268	.406	.168			5
6	.025	.069	-.092	-.217	-.227	-.295					.010	.016	.173	-.271	.120	.185				6
7	.051	.078	-.257	-.198	-.341						.008	.026	-.039	-.256	.160					7
8	.028	-.136	-.257								-.002	-.049	-.064							8
9	.223	-.166	-.253								-.140	-.039	-.109							9
10	-.020	-.181									-.058	-.040								10
11	-.089										-.034									11
								α = 00°			δ = 30°									
1	.387	.345	.290	.277	.264	-.115		-.416												1
2	.060	.044	.042	.029	-.415	-.413	-.412				.061		.038		.811	.801	.740			2
3	.030	.023		.618	-.252	1.747	-.405				.033	.036	.005		.792	.710	.725			3
4	.034	.007	-.003	-.369	-.240	-.377	-.431				.033		-.017	-.192	.688	.555	.677			4
5	.023	.005	.169	-.295	-.269	-.335	-.424				-.001	-.003	.013	-.275	.371	.536	.219			5
6	.009	.062	-.105	-.232	-.223	-.333					.015	.026	.219	-.312	.220	.301				6
7	.038	.083	-.280	-.211	-.354						.014	.059	-.018	-.272	.250					7
8	.025	-.137	-.298								-.003	-.020	-.069							8
9	.209	-.181	-.293								-.129	-.003	-.109							9
10	.002	-.196									-.021	-.014								10
11	-.074										.100									11
								α = 03°			δ = 00°									
1	.380	.221	.228	.145	.231	.258		-.255												1
2	-.005	-.071	-.139	-.202	-.199	-.230	-.262				.129		.149		.157	.152	.178			2
3	-.020	-.026		-.072	-.083	1.749	-.214				.066	.077	.072		.124	.110	.140			3
4	-.006	-.041	-.070	-.068	-.075	-.088	-.094				.071		.048	.055	.076	.066	.131			4
5	-.034	-.041	-.047	-.190	.085	-.095	-.182				.041	.052	.040	-.108	.053	.052	-.087			5
6	-.021	.002	-.040	-.202	-.188	-.234					.054	.067	.072	-.099	-.106	-.104				6
7	-.009	-.024	-.178	-.202	-.198						.053	.064	-.106	-.099	-.106					7
8	-.025	-.175	-.180								.047	-.110	-.109							8
9	.226	-.169	-.180								-.116	-.102	-.100							9
10	-.097	-.169									-.053	-.105								10
11	-.151										-.122									11
								α = 06°			δ = -02°									
1	.340	.105	.153	.020	.196	.181		-.362												1
2	-.069	-.244	-.312	-.355	-.362	-.385	-.390				.184		.230		.245	.232	.248			2
3	-.049	-.065		-.208	-.310	1.742	-.337				.115	.137	.139		.197	.170	.219			3
4	-.032	-.080	-.110	-.137	-.250	-.277	-.319				.128		.107	.082	.160	.147	.179			4
5	-.077	-.079	-.090	-.228	-.140	-.186	-.355				.110	.103	.088	-.079	.122	.105	-.037			5
6	-.054	-.034	-.067	-.247	-.288	-.308					.105	.121	.114	-.079	-.021	-.031				6
7	-.043	-.052	-.204	-.246	-.303						.105	.107	-.083	-.079	-.047					7
8	-.065	-.193	-.206								.095	-.080	-.083							8
9	.212	-.191	-.206								-.064	-.080	-.084							9
10	-.110	-.191									-.016	-.076								10
11	-.163										-.092									11
								α = 06°			δ = 00°									
1	.334	.101	.144	.015	.176	.164		-.344												1
2	-.067	-.246	-.314	-.355	-.323	-.351	-.355				.191		.234		.239	.249	.262			2
3	-.052	-.067		-.147	-.281	1.744	-.341				.127	.146	.152		.210	.182	.210			3
4	-.035	-.080	-.122	-.123	-.166	-.217	-.316				.140		.103	.121	.148	.133	.184			4
5	-.084	-.081	-.098	-.235	-.119	-.146	-.355				.110	.112	.101	-.057	.120	.111	-.030			5
6	-.055	-.039	-.083	-.231	-.223	-.276					.110	.132	.136	-.051	-.059	-.049				6
7	-.045	-.057	-.222	-.230	-.246						.110	.120	-.064	-.051	-.058					7
8	-.059	-.196	-.211								.106	-.064	-.061							8
9	.210	-.198	-.213								-.057	-.054	-.055							9
10	-.111	-.201									-.013	-.053								10
11	-.172										-.083									11

Table 6 Continued

Pressure Coefficients on Delta Wing with Control

Configuration D M = 1.61 R = 4.2 x 10^6

Orif	Upper Surface at Station 1	2	3	4	5	6	7	8	9		Lower Surface at Station 1	2	3	4	5	6	7	8	9	Orif
								α = 06°			δ = 05°									
1	.339	.096	.149	.014	.266	.074		-.397												1
2	-.073	-.245	-.313	-.343	-.372	-.408	-.418				.195		.230		.416	.361	.363			2
3	-.055	-.073		-.096	-.349	1.748	-.403				.121	.143	.138		.392	.287	.319			3
4	-.042	-.083	-.109	-.137	-.198	-.323	-.388				.132		.104	.163	.222	.222	.267			4
5	-.078	-.083	-.130	-.251	-.148	-.170	-.390				.098	.108	.087	-.041	.191	.190	-.002			5
6	-.063	-.035	-.098	-.240	-.220	-.273					.106	.128	.162	-.036	.024	.005				6
7	-.041	-.060	-.226	-.238	-.244						.110	.109	-.030	-.101	.011					7
8	-.064	-.214	-.226								.098	-.053	-.030							8
9	.206	-.205	-.226								-.064	-.037	-.030							9
10	-.109	-.212									-.016	-.038								10
11	-.176										-.068									11
								α = 06°			δ = 10°									
1	.336	.096	.150	.017	.288	.043		-.420												1
2	-.080	-.249	-.318	-.343	-.385	-.420	-.441				.202		.228		.556	.491	.466			2
3	-.060	-.076		-.213	-.338	1.746	-.434				.136	.147	.149		.586	.400	.432			3
4	-.052	-.084	-.102	-.133	-.210	-.369	-.417				.143		.112	.189	.342	.318	.371			4
5	-.087	-.087	-.096	-.244	-.163	-.292	-.417				.113	.111	.067	-.029	.268	.274	.079			5
6	-.064	-.031	-.135	-.231	-.221	-.307					.118	.131	.204	-.114	.057	.076				6
7	-.045	-.048	-.244	-.222	-.275						.118	.111	.004	-.154	.065					7
8	-.065	-.209	-.232								.104	-.036	.004							8
9	.194	-.240	-.227								-.058	-.007	-.013							9
10	-.110	-.233									-.004	-.007								10
11	-.158										-.067									11
								α = 06°			δ = 15°									
1	.338	.101	.157	.027	.324	-.006		-.450												1
2	-.069	-.245	-.307	-.312	-.403	-.443	-.451				.200		.226		.622	.662	.592			2
3	-.053	-.066		-.440	-.398	1.743	-.451				.130	.141	.144		.590	.553	.563			3
4	-.037	-.079	-.083	-.229	-.227	-.412	-.448				.136		.107	.174	.462	.439	.441			4
5	-.078	-.081	-.070	-.255	-.178	-.375	-.436				.109	.103	.060	-.048	.366	.392	.149			5
6	-.056	.001	-.176	-.215	-.229	-.362					.111	.126	.231	-.180	.144	.173				6
7	-.041	-.024	-.268	-.205	-.344						.111	.109	.036	-.162	.174					7
8	-.052	-.201	-.244								.095	-.012	.014							8
9	.193	-.234	-.224								-.061	.007	-.014							9
10	-.087	-.243									-.010	.012								10
11	-.139										-.051									11
								α = 06°			δ = 20°									
1	.343	.102	.152	.019	.313	-.071		-.451												1
2	-.069	-.244	-.313	-.342	-.418	-.449	-.470				.201		.231		.786	.768	.701			2
3	-.058	-.067		-.043	-.421	1.747	-.466				.124	.134	.144		.606	.696	.684			3
4	-.040	-.079	-.053	-.393	-.272	-.436	-.460				.147		.110	.142	.668	.558	.536			4
5	-.083	-.078	-.069	-.290	-.233	-.409	-.446				.109	.109	.065	-.107	.479	.502	.187			5
6	-.062	.034	-.177	-.231	-.253	-.400					.111	.129	.267	-.205	.228	.279				6
7	-.047	-.024	-.316	-.180	-.390						.111	.120	.066	-.146	.252					7
8	-.037	-.212	-.281								.096	.020	.022							8
9	.192	-.226	-.262								-.053	.039	-.006							9
10	-.076	-.244									-.001	.040								10
11	-.129										-.016									11
								α = 06°			δ = 25°									
1	.344	.108	.154	.025	.304	-.129		-.442												1
2	-.061	-.232	-.306	-.210	-.430	-.453	-.467				.195		.237		.904	.908	.815			2
3	-.050	-.060		.369	-.418	1.748	-.462				.126	.141	.148		.715	.856	.820			3
4	-.032	-.076	-.030	-.347	-.319	-.441	-.456				.131		.104	.115	.875	.730	.633			4
5	-.071	-.069	-.029	-.376	-.276	-.415	-.442				.108	.103	.066	-.178	.640	.569	.240			5
6	-.051	.087	-.194	-.232	-.251	-.410					.107	.121	.315	-.223	.331	.398				6
7	-.036	-.012	-.302	-.098	-.409						.106	.163	.074	-.112	.338					7
8	.017	-.212	-.316								.093	.052	.012							8
9	.195	-.240	-.289								-.055	.070	-.014							9
10	-.047	-.239									.032	.054								10
11	-.106										.032									11

Table 6 Continued

Pressure Coefficients on Delta Wing with Control

Configuration D $M = 1.61$ $R = 4.2 \times 10^6$

Orif	Upper Surface at Station 1	2	3	4	5	6	7	8	9	Lower Surface at Station 1	2	3	4	5	6	7	8	9	Orif
								$\alpha = 06^\circ$		$\delta = 30^\circ$									
1	.341	.110	.157	.025	.262	-.191		-.438											1
2	-.066	-.239	-.302	-.144	-.449	-.460	-.472			.190		.237		1.053	1.030	.923			2
3	-.051	-.066		.718	-.424	1.755	-.464			.129	.147	.156		.874	1.018	.943			3
4	-.038	-.076	.054	-.291	-.384	-.450	-.449			.139		.105	.084	1.058	.874	.728			4
5	-.078	-.079	.006	-.420	-.307	-.426	-.438			.111	.102	.101	-.236	.791	.641	.298			5
6	-.053	.129	-.213	-.216	-.292	-.418				.109	.118	.353	-.180	.474	.523				6
7	-.044	-.002	-.324	-.216	-.443					.098	.231	.079	-.107	.396					7
8	.095	-.213	-.329							.088	.089	.007							8
9	.195	-.232	-.270							-.039	.079	-.026							9
10	-.038	-.231								.107	.056								10
11	-.086									.108									11
								$\alpha = 12^\circ$		$\delta = 00^\circ$									
1	.214	-.092	-.011	-.178	.063	-.037		-.358											1
2	-.284	-.419	-.452	-.483	-.337	-.349	-.363			.324		.394		.393	.373	.401			2
3	-.124	-.176		-.442	-.350	1.755	-.379			.267	1.014	.278		.343	.336	.367			3
4	-.097	-.169	-.217	-.353	-.323	-.351	-.360			.272		.244	.260	.299	.283	.311			4
5	-.155	-.179	-.168	-.390	-.276	-.322	-.358			.236	.243	.244	.053	.286	.247	.057			5
6	-.132	-.154	-.160	-.363	-.284	-.340				.237	.263	.257	.052	.047	.056				6
7	-.132	-.130	-.259	-.346	-.273					.226	.241	.033	.059	.057					7
8	-.130	-.254	-.266							.237	.028	.035							8
9	.218	-.245	-.266							.041	.040	.040							9
10	-.183	-.255								.071	.040								10
11	-.212									.022									11
								$\alpha = 12^\circ$		$\delta = 05^\circ$									
1	.214	-.089	-.016	-.178	.212	-.086		-.394											1
2	-.286	-.422	-.460	-.473	-.392	-.390	-.399			.333		.395		.605	.490	.492			2
3	-.129	-.178		-.428	-.409	1.753	-.416			.270	.971	.286		.518	.449	.479			3
4	-.099	-.175	-.182	-.282	-.378	-.394	-.402			.271		.246	.340	.435	.379	.384			4
5	-.155	-.181	-.204	-.325	-.314	-.364	-.396			.240	.242	.235	.099	.388	.333	.096			5
6	-.133	-.155	-.178	-.329	-.323	-.374				.241	.259	.303	.082	.158	.154				6
7	-.125	-.132	-.269	-.305	-.320					.220	.242	.071	.001	.140					7
8	-.125	-.278	-.201							.233	.052	.071							8
9	.203	-.263	-.268							.042	.066	.071							9
10	-.173	-.263								.073	.060								10
11	-.214									.032									11
								$\alpha = 12^\circ$		$\delta = 10^\circ$									
1	.224	-.091	-.006	-.177	.282	-.134		-.394											1
2	-.272	-.419	-.453	-.452	-.407	-.418	-.423			.331		.396		.732	.661	.605			2
3	-.118	-.177		-.470	-.423	1.755	-.437			.268	.957	.289		.714	.580	.583			3
4	-.101	-.171	-.187	-.281	-.405	-.413	-.423			.276		.254	.379	.501	.502	.497			4
5	-.151	-.175	-.187	-.310	-.341	-.396	-.409			.236	.237	.200	.124	.418	.432	.172			5
6	-.130	-.117	-.245	-.288	-.364	-.383				.236	.258	.348	-.032	.348	.273				6
7	-.127	-.106	-.306	-.197	-.359					.224	.241	.120	-.055	.243					7
8	-.110	-.272	-.286							.227	.083	.103							8
9	.190	-.286	-.260							.034	.096	.103							9
10	-.137	-.302								.066	.101								10
11	-.184									.052									11
								$\alpha = 12^\circ$		$\delta = 20^\circ$									
1	.209	-.099	-.018	-.171	.271	-.182		-.395											1
2	-.285	-.424	-.454	-.295	-.437	-.439	-.046			.334		.390		.894	.958	.836			2
3	-.125	-.184		-.151	-.430	1.759	-.443			.269	.937	.280		.883	.909	.845			3
4	-.107	-.178	-.070	-.240	-.431	-.436	-.431			.269		.250	.368	.844	.795	.692			4
5	-.158	-.161	-.144	-.262	-.356	-.412	-.426			.228	.244	.207	-.017	.695	.599	.254			5
6	-.131	-.081	-.280	-.162	-.377	-.403				.228	.263	.441	-.134	.530	.495				6
7	-.107	-.128	-.343	-.165	-.390					.215	.280	.174	-.147	.398					7
8	-.065	-.284	-.282							.229	.137	.120							8
9	.156	-.292	-.134							.037	.155	.098							9
10	-.126	-.309								.130	.138								10
11	-.177									.149									11

Table 6 Continued

Pressure Coefficients on Delta Wing with Control

Configuration D M = 1.61 R = 4.2×10^6

Orif	Upper Surface at Station 1	2	3	4	5	6	7	8	9		Lower Surface at Station 1	2	3	4	5	6	7	8	9	Orif
								α = 12°			δ = 30°									
1	.225	-.090	-.011	-.171	.052	-.258		-.395												1
2	-.276	-.417	-.380	-.224	-.437	-.438	-.451				.320		.391		1.158	1.219	1.042			2
3	-.117	-.151		.430	-.444	1.754	-.436				.275	.924	.281		1.087	1.196	1.076			3
4	-.099	-.127	-.141	-.388	-.431	-.444	-.434				.272		.250	.265	1.190	1.049	.855			4
5	-.146	-.116	-.175	-.313	-.346	-.423	-.417				.228	.236	.342	-.103	.982	.785	.558			5
6	-.117	.014	-.279	-.154	-.400	-.422					.233	.258	.478	-.177	.745	.652				6
7	-.021	-.089	-.308	-.153	-.416						.216	.393	.174	-.210	.534					7
8	.019	-.263	-.258								.227	.183	.106							8
9	.187	-.263	-.170								.118	.178	.067							9
10	-.106	-.137									.241	.149								10
11	-.189										.264									11
								α = 15°			δ = 00°									
1	.136	-.189	-.195	-.268	-.111	-.163		-.438												1
2	-.363	-.447	-.481	-.487	-.466	-.466	-.465				.426		.470		.477	.488	.513			2
3	-.162	-.245		-.414	-.460	1.756	-.462				.357	.870	.374		.479	.462	.502			3
4	-.142	-.214	-.376	-.348	-.441	-.464	-.457				.361		.377	.391	.435	.432	.438			4
5	-.179	-.218	-.358	-.381	-.352	-.439	-.451				.307	.366	.401	.148	.421	.350	.118			5
6	-.169	-.196	-.320	-.338	-.401	-.439					.352	.399	.384	.148	.160	.181				6
7	-.153	-.161	-.332	-.305	-.347						.349	.368	.129	.148	.162					7
8	-.153	-.292	-.313								.353	.124	.129							8
9	.241	-.286	-.313								.135	.130	.129							9
10	-.197	-.280									.144	.124								10
11	-.215										.122									11
								α = 15°			δ = 20°									
1	.128	-.192	-.187	-.254	.220	-.251		-.398												1
2	-.375	-.443	-.421	-.339	-.442	-.448	-.448				.428		.469		1.015	1.093	.920			2
3	-.164	-.318		-.223	-.442	1.754	-.439				.355	.364	.378		.971	1.080	.956			3
4	-.146	-.319	-.252	-.407	-.435	-.446	-.437				.364		.378	.536	.904	.957	.781			4
5	-.183	-.176	-.213	-.410	-.345	-.434	-.436				.308	.363	.442	.072	.817	.687	.354			5
6	-.171	-.101	-.329	-.395	-.408	-.434					.356	.396	.573	-.061	.642	.611				6
7	-.114	-.146	-.340	-.347	-.400						.349	.500	.260	-.094	.479					7
8	-.096	-.297	-.285								.357	.244	.214							8
9	.188	-.324	-.169								.206	.243	.200							9
10	-.153	-.305									.271	.259								10
11	-.215										.321									11
								α = -06°			δ = 10°									
1	.315	.368	.169	.164	.345	.281		.004												1
2	.185	.200	.218	.236	.098	.029	.002				-.066		-.280		.103	.000	.028			2
3	.128	.140		.110	.078	1.757	.019				-.055	-.078	-.109		-.141	-.103	-.022			3
4	.126	.102	.112	.002	.023	.032	.019				-.049		-.099	-.138	-.171	-.101	-.002			4
5	.119	.108	.112	-.076	-.023	-.003	-.091				-.086	-.074	-.059	-.260	-.105	-.059	-.151			5
6	.105	.159	.070	-.128	-.260	-.166					-.056	-.068	-.057	-.220	-.198	-.190				6
7	.132	.120	-.106	-.152	-.196						-.066	-.040	-.193	-.210	-.194					7
8	.111	-.075	-.110								-.066	-.174	-.179							8
9	.234	-.090	-.119								-.192	-.175	-.181							9
10	.002	-.090									-.113	-.183								10
11	-.072										-.143									11
								α = -06°			δ = 20°									
1	.316	.376	.179	.162	.295	.074		-.246												1
2	.195	.200	.226	.236	-.031	-.194	-.204				-.076		-.295		.402	.232	.247			2
3	.136	.142		.142	-.032	1.756	-.163				-.059	-.091	-.108		.243	.053	.176			3
4	.136	.108	.118	-.114	-.104	-.061	-.198				-.061		-.108	-.171	-.186	-.036	.123			4
5	.125	.111	.137	-.152	-.146	-.089	-.263				-.093	-.081	-.055	-.298	-.078	.056	-.046			5
6	.110	.166	.052	-.166	-.265	-.191					-.070	-.064	-.034	-.258	-.163	-.114				6
7	.133	.136	-.138	-.162	-.283						-.072	-.035	-.167	-.281	-.105					7
8	.115	-.079	-.146								-.072	-.154	-.175							8
9	.221	-.092	-.165								-.198	-.161	-.182							9
10	.004	-.101									-.102	-.161								10
11	-.057										-.117									11

Table 6 Continued

Pressure Coefficients on Delta Wing with Control

Configuration D M = 1.61 R = 4.2 x 10^6

Orif	Upper Surface at Station 1	2	3	4	5	6	7	8	9	Lower Surface at Station 1	2	3	4	5	6	7	8	9	Orif
								α = -06°			δ = 30°								
1	.313	.371	.177	.164	.262	-.098		-.337		-.071		-.292		.774	.488	.489			1
2	.190	.198	.223	.237	-.288	-.321	-.320			-.063	-.086	-.105		.507	.310	.423			2
3	.130	.145		.469	-.116	1.760	-.314			-.055		-.105	-.240	.049	.248	.371			3
4	.130	.113	.119	-.280	-.201	-.212	-.349			-.084	-.083	-.074	-.329	.060	.293	.123			4
5	.121	.115	.245	-.280	-.252	-.187	-.363			-.058	-.068	.027	-.356	.001	.093				5
6	.100	.167	.013	-.198	-.252	-.237				-.071	-.017	-.111	-.379	.069					6
7	.128	.167	-.163	-.180	-.364					-.075	-.109	-.149							7
8	.112	-.074	-.185							-.195	-.122	-.187							8
9	.205	-.106	-.196							-.075	-.108								9
10	.020	-.115								-.056									10
11	-.037																		11
								α = -12°			δ = 00°								
1	.169	.257	.010	-.102	.013	-.137		.377		-.250		-.447		-.216	-.265	-.261			1
2	.348	.351	.376	.385	.372	.368	.369			-.123	-.129	-.358		-.286	-.303	-.239			2
3	.258	.253		.277	.329	1.762	.352			-.118		-.189	-.307	-.270	-.279	-.159			3
4	.257	.241	.244	.245	.286	.288	.310			-.144	-.167	-.186	-.357	-.259	-.279	-.333			4
5	.236	.229	.262	.055	.233	.259	.087			-.130	-.167	-.147	-.346	-.262	-.300				5
6	.228	.297	.241	.048	-.027	.006				-.130	-.148	-.271	-.290	-.268					6
7	.250	.243	.028	.036	-.005					-.130	-.251	-.264							7
8	.231	.024	.028							-.240	-.247	-.258							8
9	.263	.033	.035							-.162	-.254								9
10	.087	.037								-.199									10
11	.029																		11
								α = -12°			δ = 10°								
1	.167	.250	.011	-.101	.409	.209		.178		-.273		-.460		.076	-.161	-.210			1
2	.346	.351	.374	.380	.236	.205	.198			-.130	-.165	-.375		-.278	-.257	-.209			2
3	.257	.250		.266	.207	1.752	.170			-.126		-.201	-.290	-.355	-.316	-.138			3
4	.257	.239	.256	.093	.131	.133	.156			-.152	-.172	-.147	-.322	-.323	-.314	-.350			4
5	.232	.230	.277	-.018	.034	.111	-.001			-.131	-.174	-.163	-.273	-.310	-.361				5
6	.224	.295	.185	-.063	-.037	-.109				-.146	-.114	-.295	-.269	-.307					6
7	.249	.247	-.025	-.073	-.155					-.140	-.242	-.281							7
8	.238	.016	-.038							-.250	-.248	-.265							8
9	.252	.007	-.038							-.146	-.267								9
10	.088	.002								-.162									10
11	.030																		11
								α = -12°			δ = 20°								
1	.178	.257	.016	-.101	.322	.086		-.096		-.271		-.447		.418	.107	.073			1
2	.352	.353	.382	.389	.136	-.112	-.003			-.117	-.166	-.358		.189	-.101	-.012			2
3	.259	.253		.325	.180	1.755	-.027			-.113		-.193	-.341	-.384	-.265	-.033			3
4	.259	.241	.250	-.024	-.071	.024	-.053			-.157	-.166	-.109	-.324	-.356	-.261	-.272			4
5	.233	.234	.278	-.110	-.153	-.015	-.096			-.127	-.166	-.129	-.308	-.326	-.335				5
6	.239	.304	.183	-.101	-.154	-.153				-.139	-.092	-.284	-.302	-.319					6
7	.254	.246	-.044	-.102	-.278					-.138	-.204	-.297							7
8	.248	.012	-.065							-.240	-.218	-.254							8
9	.241	.007	-.073							-.107	-.244								9
10	.080	-.002								-.113									10
11	.032																		11
								α = -12°			δ = 30°								
1	.174	.259	.023	-.090	.271	-.111		-.259		-.263		-.449		.760	.388	.290			1
2	.347	.356	.380	.389	-.204	-.262	-.229			-.128	-.171	-.358		.509	.106	.190			2
3	.258	.254		.506	-.045	1.757	-.240			-.122		-.191	-.352	-.152	-.145	.122			3
4	.258	.245	.259	-.165	-.177	-.054	-.271			-.152	-.165	-.137	-.399	-.333	-.129	-.123			4
5	.237	.238	.353	-.223	-.225	-.129	-.282			-.127	-.165	-.098	-.387	-.302	-.227				5
6	.236	.305	.171	-.148	-.225	-.246				-.143	-.089	-.267	-.378	-.250					6
7	.256	.272	-.066	-.131	-.355					-.134	-.167	-.282							7
8	.256	.014	-.092							-.242	-.200	-.263							8
9	.223	-.007	-.102							-.096	-.240								9
10	.097	-.012								-.096									10
11	.043																		11

Table 6 Concluded

Pressure Coefficients on Delta Wing with Control

Configuration D M = 1.61 R = 4.2 x 10^6

Orif	Upper Surface at Station										Lower Surface at Station									Orif
	1	2	3	4	5	6	7	8	9		1	2	3	4	5	6	7	8	9	
	$\alpha = -15°$										$\delta = 00°$									
1	.058	.161	-.126	-.190	-.103	-.167		.466												1
2	.435	.448	.460	.478	.462	.457	.471				-.371		-.471		-.148	-.225	-.247			2
3	.347	.349		.407	.445	1.755	.476				-.166	-.205	-.424		-.254	-.290	-.227			3
4	.347	.355	.403	.379	.401	.401	.430				-.167		-.391	-.341	-.320	-.317	-.165			4
5	.334	.381	.437	.152	.355	.373	.154				-.187	-.220	-.379	-.373	-.373	-.320	-.351			5
6	.374	.450	.378	.145	.046	.080					-.184	-.220	-.310	-.373	-.349	-.345				6
7	.394	.383	.132	.130	.054						-.178	-.167	-.335	-.265	-.325					7
8	.368	.130	.124								-.174	-.281	-.317							8
9	.320	.130	.135								-.273	-.281	-.308							9
10	.176	.130									-.189	-.273								10
11	.130										-.188									11

Table 7

Pressure Coefficients on Delta Wing with Control

Configuration E M = 1.61 R = 1.7×10^6

Orif	Upper Surface at Station 1	2	3	4	5	6	7	8	9	Lower Surface at Station 1	2	3	4	5	6	7	8	9	Orif
								$\alpha = 00^\circ$		$\delta = -30^\circ$									
1	.401	.391	.330	.314		-.298	-.321										-.311		1
2	.094	.061	.053	.026	.835	.759	.728			.122		.069		-.387	-.362	-.397			2
3	.071	.045		.316	.743		.354			.079	.023	.003		-.201	-.397	-.349			3
4	.057	.033	.018	-.151	.703	.665	.405			.056		.064	-.323	-.242	-.397				4
5	.035	.041	.088	-.247	.461	.369				.018	.059	.127	-.278	-.234	-.397				5
6	.045	.084	.255	-.278	.252					.061	.074	-.043	-.183	-.351					6
7	.069	.161	.010	-.257						.028	.094	-.237	-.181	-.316					7
8	.037	.000	-.035							.048	-.099	-.275							8
9	-.100	.018	-.100							-.053	-.125	-.237							9
10	.022	.018								-.008	-.168								10
11	.022									-.028									11
								$\alpha = 00^\circ$		$\delta = -25^\circ$									
1	.381	.387	.350	.297		-.262	-.318										-.351		1
2	.079	.043	.043	.041	.652	.642	.652			.087		.066		-.407	-.377	-.423			2
3	.035	.035		.234	.563		.199			.038	.023	.008		-.183	-.423	-.387			3
4	.047	.014	.006	-.086	.530	.514	.278			.038		.033	-.239	-.234	-.423				4
5	.018	.014	.041	-.250	.339	.237				.003	.059	.036	-.239	-.211	-.423				5
6	.029	.063	.165	-.267	.160					.038	.059	-.046	-.176	-.362					6
7	.053	.124	-.039	-.242						.008	.059	-.232	-.165	-.334					7
8	.016	-.067	-.051							.031	-.109	-.244							8
9	-.110	-.012	-.102							-.087	-.148	-.219							9
10	-.051	-.031								-.048	-.165								10
11	-.047									-.061									11
								$\alpha = 00^\circ$		$\delta = -20^\circ$									
1	.391	.393	.326	.334		-.168	-.288										-.339		1
2	.081	.061	.045	.065	.494	.514	.558			.081		.061		-.390	-.369	-.428			2
3	.047	.053		.193	.430		.122			.048	.025	.020		-.137	-.420	-.384			3
4	.063	.026	.026	-.004	.387	.418	.168			.051		.020	-.186	-.222	-.420				4
5	.041	.031	.061	-.232	.242	.137				-.005	.051	.023	-.186	-.158	-.379				5
6	.041	.077	.143	-.216	.087					.061	.051	-.023	-.186	-.341					6
7	.057	.122	-.028	-.178						.025	.051	-.209	-.155	-.313					7
8	.037	-.063	-.049							.031	-.122	-.209							8
9	-.096	-.026	-.073							-.102	-.145	-.193							9
10	-.029	-.037								-.053	-.153								10
11	-.069									-.089									11
								$\alpha = 00^\circ$		$\delta = -15^\circ$									
1	.385	.358	.310	.295		-.064	-.199										-.331		1
2	.069	.029	.041	.045	.359	.420	.438			.089		.061		-.362	-.372	-.418			2
3	.035	.031		.143	.298		.020			.038	.025	.023		-.109	-.384	-.392			3
4	.035	.014	-.004	.033	.222	.293	.074			.038		.008	-.109	-.191	-.387				4
5	.035	.026	.029	-.191	.181	.013				-.003	.064	.008	-.150	-.109	-.313				5
6	.012	.055	.100	-.201	.003					.043	.036	-.048	-.188	-.321					6
7	.041	.104	-.084	-.176						.028	.036	-.168	-.165	-.272					7
8	.018	-.108	-.065							.031	-.135	-.191							8
9	-.134	-.069	-.083							-.130	-.132	-.178							9
10	-.053	-.077								-.061	-.140								10
11	-.106									-.115									11
								$\alpha = 00^\circ$		$\delta = -10^\circ$									
1	.393	.367	.307	.287		.048	-.066										-.334		1
2	.073	.053	.033	.033	.278	.313	.336			.092		.048		-.216	-.341	-.405			2
3	.035	.033		.094	.262		-.038			.046	.023	.013		-.074	-.344	-.387			3
4	.037	.020	-.006	.018	.140	.232	-.008			.043		.013	-.046	-.171	-.288				4
5	.026	.020	.031	-.165	.130	-.020				-.010	.059	.013	-.127	-.069	-.288				5
6	.041	.053	.067	-.158	-.041					.038	.038	-.033	-.163	-.270					6
7	.045	.092	-.086	-.158						.031	.038	-.181	-.163	-.219					7
8	.018	-.104	-.084							.031	-.135	-.176							8
9	-.130	-.102	-.096							-.115	-.135	-.120							9
10	-.049	-.086								-.059	-.135								10
11	-.112									-.104									11

Table 7 Continued

Pressure Coefficients on Delta Wing with Control

Configuration E M = 1.61 R = 1.7×10^6

Orif	Upper Surface at Station 1	2	3	4	5	6	7	8	9	Lower Surface at Station 1	2	3	4	5	6	7	8	9	Orif
							$\alpha = 00^\circ$			$\delta = 00^\circ$									
1	.389	.365	.307	.303		.242	.181										-.283		1
2	.077	.041	.035	.039	.148	.155	.148			.089		.109		-.033	-.165	-.206			2
3	.037	.033		.026	.104		-.099			.048	.023	.003		-.008	-.165	-.293			3
4	.037	.016	.000	.008	.076	.120	-.076			.051		.008	.013	-.069	-.109				4
5	.018	.016	.026	-.160	.059	-.074				.005	.064	.008	-.120	-.013	-.224				5
6	.037	.077	.018	-.125	-.079					.046	.043	.033	-.120	-.186					6
7	.037	.102	-.138	-.145						.028	.043	-.140	-.120	-.171					7
8	.037	-.136	-.138							.028	-.125	-.140							8
9	-.114	-.124	-.128							-.135	-.125	-.097							9
10	-.065	-.124								-.056	-.125								10
11	-.116									-.120									11
							$\alpha = 00^\circ$			$\delta = 03^\circ$									
1	.389	.373	.324	.291		.303	.247										-.237		1
2	.079	.051	.039	.047	.092	.053	.048			.074		.069		.028	-.031	-.048			2
3	.031	.028		-.008	.048		-.171			.048	.028	.023		.028	-.031	-.232			3
4	.031	.029	-.006	-.004	.038	.059	-.115			.051		.023	.038	-.053	-.031				4
5	.020	.029	.020	-.163	.038	-.130				-.008	.071	.023	-.135	.013	-.204				5
6	.035	.055	.004	-.140	-.107					.048	.048	.023	-.135	-.148					6
7	.047	.096	-.143	-.140						.028	.048	-.132	-.135	-.143					7
8	.016	-.143	-.143							.028	-.104	-.130							8
9	-.126	-.141	-.143							-.109	-.104	-.089							9
10	-.063	-.141								-.048	-.104								10
11	-.102									-.109									11
							$\alpha = 00^\circ$			$\delta = 10^\circ$									
1	.377	.371	.310	.294		.215	.166										-.023		1
2	.069	.039	.045	.043	-.097	-.133	-.146			.087		.056		.240	.230	.230			2
3	.028	.034		-.087	-.026		-.271			.056	.028	.018		.248	.166	-.056			3
4	.036	.016	.008	-.038	-.041	-.051	-.220			.051		.000	.046	.077	.128				4
5	.022	.018	.024	-.166	-.020	-.179				.005	.054	.026	-.151	.089	-.074				5
6	.024	.061	-.018	-.166	-.184					.041	.041	.051	-.169	-.049					6
7	.049	.091	-.160	-.166						.028	.046	-.082	-.159	-.038					7
8	.028	-.144	-.170							.026	-.107	-.092							8
9	-.116	-.144	-.158							-.118	-.089	-.082							9
10	-.067	-.152								-.061	-.082								10
11	-.122									-.107									11
							$\alpha = 00^\circ$			$\delta = 20^\circ$									
1	.379	.373	.310	.296		.066	.003										.187		1
2	.073	.043	.047	.039	-.194	-.225	-.240			.092		.049		.460	.460	.440			2
3	.026	.034		.085	-.082		-.325			.056	.041	.015		.389	.389	.092			3
4	.034	.018	.022	-.188	-.115	-.184	-.276			.051		.000	-.054	.271	.317				4
5	.024	.018	.053	-.205	-.061	-.253				.005	.054	.033	-.197	.205	.077				5
6	.026	.063	-.053	-.166	-.245					.038	.043	.151	-.238	.061					6
7	.045	.109	-.211	-.164						.020	.051	-.051	-.194	.097					7
8	.030	-.140	-.205							.026	-.084	-.072							8
9	-.111	-.152	-.213							-.113	-.041	-.072							9
10	-.057	-.172								-.056	-.051								10
11	-.103									-.077									11
							$\alpha = 00^\circ$			$\delta = 29^\circ$									
1	.367	.355	.300	.290		-.079	-.120										.437		1
2	.059	.032	.038	.030	-.274	-.289	-.296			.082		.054		.706	.655	.606			2
3	.014	.022		.501	-.161		-.353			.046	.023	.010		.644	.588	.297			3
4	.024	.006	.038	-.316	-.176	-.251	-.320			.043		-.005	-.156	.547	.529				4
5	.008	.010	.138	-.304	-.161	-.322				-.003	.054	.033	-.251	.373	.268				5
6	.016	.069	-.081	-.184	-.304					.033	.038	.220	-.276	.202					6
7	.038	.124	-.263	-.164						.010	.069	-.018	-.261	.240					7
8	.028	-.150	-.276							.023	-.031	-.064							8
9	-.091	-.172	-.237							-.120	-.015	-.105							9
10	-.036	-.190								-.028	-.023								10
11	-.073									-.008									11

Table 7 Continued

Pressure Coefficients on Delta Wing with Control

Configuration E M = 1.61 R = 1.7×10^6

Orif	Upper Surface at Station 1	2	3	4	5	6	7	8	9	Lower Surface at Station 1	2	3	4	5	6	7	8	9	Orif
								α = 06°				δ = -30°							
1	.328	.114	.151	.024		-.079	-.094										-.293		1
2	-.079	-.220	-.289	-.318	.779	.440	.560			.222		.275		-.262	-.216	-.255			2
3	-.039	-.067		-.269	.481		.079			.160	.155	.155		-.089	-.272	-.326			3
4	-.039	-.083	-.102	-.220	.053	.374	.140			.160		.109	-.211	-.191	-.295				4
5	-.077	-.083	-.049	-.326	.171	.130				.079	.178	.222	-.242	-.153	-.293				5
6	-.067	-.035	.012	-.336	.043					.150	.158	.074	-.171	-.283					6
7	-.037	.063	-.116	-.328						.127	.171	-.150	-.158	-.262					7
8	-.071	-.126	-.136							.137	-.053	-.160							8
9	-.191	-.126	-.181							-.008	-.059	-.160							9
10	-.057	-.122								.020	-.087								10
11	-.057									-.013									11
								α = 06°				δ = -20°							
1	.344	.108	.179	.012		.015	-.028										-.298		1
2	-.073	-.206	-.301	-.348	.458	.247	.308			.224		.255		-.186	-.247	-.295			2
3	-.043	-.055		-.334	.227		-.053			.135	.165	.145		-.046	-.293	-.346			3
4	-.031	-.088	-.106	-.151	-.165	.145	-.018			.153		.145	-.089	-.173	-.201				4
5	-.073	-.084	-.029	-.278	.031	-.048				.094	.188	.145	-.155	-.173	-.247				5
6	-.059	-.043	-.029	-.250	-.094					.181	.145	.094	-.140	-.316					6
7	-.045	.053	-.187	-.250						.120	.145	-.140	-.140	-.237					7
8	-.069	-.167	-.179							.135	-.053	-.140							8
9	-.179	-.163	-.179							-.041	-.048	-.115							9
10	-.092	-.163								-.003	-.053								10
11	-.112									-.046									11
								α = 06°				δ = -10°							
1	.360	.130	.171	.008		.257	.216										-.283		1
2	-.086	-.208	-.273	-.342	.183	.074	.099			.227		.270		.081	-.069	-.130			2
3	-.035	-.029		-.295	-.092		-.178			.145	.155	.173		.056	-.059	-.244			3
4	-.020	-.083	-.108	-.126	-.181	-.008	-.115			.160		.148	.018	-.046	-.046				4
5	-.063	-.079	-.028	-.267	-.031	-.150				.107	.191	.104	-.066	-.041	-.191				5
6	-.055	-.031	-.065	-.191	-.160					.160	.143	.109	-.094	-.234					6
7	-.020	.059	-.181	-.191						.120	.143	-.094	-.099	-.196					7
8	-.059	-.167	-.181							.145	-.053	-.094							8
9	-.191	-.165	-.181							-.018	-.048	-.094							9
10	-.102	-.165								.003	-.053								10
11	-.118									-.028									11
								α = 06°				δ = 00°							
1	.330	.098	.175	.018		.201	.165										-.132		1
2	-.069	-.214	-.287	-.332	-.099	-.145	-.140			.216		.250		.227	.158	.135			2
3	-.041	-.065		-.179	-.229		-.252			.140	.145	.155		.183	.135	-.115			3
4	-.033	-.077	-.108	-.124	-.171	-.135	-.222			.140		.125	.125	.064	.089				4
5	-.084	-.077	-.096	-.234	-.089	-.214				.089	.155	.125	-.043	.104	-.104				5
6	-.053	-.045	-.088	-.216	-.211					.137	.155	.140	-.043	-.087					6
7	-.049	.022	-.208	-.199						.120	.150	-.046	-.043	-.079					7
8	-.057	-.206	-.208							.120	-.048	-.046							8
9	-.183	-.202	-.208							-.046	-.043	-.046							9
10	-.108	-.202								-.013	-.043								10
11	-.167									-.043									11
								α = 06°				δ = 10°							
1	.336	.124	.166	.026		-.089	-.164										.261		1
2	-.069	-.201	-.280	-.282	-.343	-.373	-.355			.210		.256		.550	.511	.465			2
3	-.057	-.061		-.255	-.325		-.376			.156	.159	.156		.552	.422	.169			3
4	-.036	-.075	-.091	-.120	-.210	-.340	-.345			.161		.130	.199	.381	.348				4
5	-.075	-.077	-.081	-.248	-.128	-.373				.107	.171	.110	-.010	.338	.153				5
6	-.061	-.026	-.116	-.205	-.325					.143	.143	.225	-.095	.143					6
7	-.038	.022	-.229	-.192						.123	.136	.003	-.120	.148					7
8	-.051	-.207	-.223							.123	-.018	.005							8
9	-.172	-.227	-.215							-.046	.018	.000							9
10	-.105	-.223								-.010	.005								10
11	-.140									-.041									11

Table 7 Continued

Pressure Coefficients on Delta Wing with Control

Configuration E M = 1.61 R = 1.7×10^6

Orif	Upper Surface at Station 1	2	3	4	5	6	7	8	9	Lower Surface at Station 1	2	3	4	5	6	7	8	9	Orif
							$\alpha = 06^\circ$			$\delta = 20^\circ$									
1	.338	.122	.178	.030		-.189	-.235										.455		1
2	-.069	-.205	-.278	-.290	-.348	-.373	-.353			.225		.243		.711	.708	.606			2
3	-.047	-.057		-.120	-.340		-.381			.159	.153	.159		.586	.634	.322			3
4	-.030	-.077	-.065	-.338	-.258	-.340	-.345			.148		.123	.169	.637	.550				4
5	-.083	-.079	-.063	-.297	-.136	-.366				.102	.164	.105	-.084	.519	.312				5
6	-.061	.012	-.168	-.222	-.366					.141	.143	.297	-.174	.284					6
7	-.034	.038	-.310	-.164						.123	.138	.072	-.123	.289					7
8	-.032	-.203	-.274							.110	.031	.023							8
9	-.136	-.219	-.249							-.049	.061	.010							9
10	-.079	-.239								-.005	.051								10
11	-.113									.000									11
							$\alpha = 06^\circ$			$\delta = 29^\circ$									
1	.345	.134	.184	.039		-.151	-.192										.652		1
2	-.055	-.190	-.265	-.152	-.322	-.335	-.340			.217		.253		.977	.869	.683			2
3	-.051	-.051		.569	-.256		-.363			.164	.159	.166		.759	.849	.606			3
4	-.026	-.065	.010	-.278	-.238	-.304	-.332			.161		.125	.136	.936	.693				4
5	-.067	-.063	.016	-.396	-.187	-.345				.110	.171	.141	-.182	.734	.552				5
6	-.049	.103	-.170	-.228	-.338					.146	.146	.371	-.161	.453					6
7	-.026	.059	-.304	-.128						.130	.220	.095	-.105	.473					7
8	.055	-.209	-.304							.125	.107	.013							8
9	-.061	-.229	-.257							-.031	.105	-.003							9
10	-.036	-.219								.092	.077								10
11	-.063									.107									11
							$\alpha = 12^\circ$			$\delta = -25^\circ$									
1	.246	-.059	.006	-.175		.003	.051										-.229		1
2	-.273	-.407	-.454	-.426	.586	.120	.173			.349		.379		.074	-.089	-.120			2
3	-.140	-.136		-.458	.344		-.222			.275	.290	.288		.015	-.150	-.222			3
4	-.088	-.153	-.197	-.334	-.336	-.130	-.206			.272		.252	-.069	-.094	-.023				4
5	-.155	-.153	-.092	-.344	-.242	-.252				.201	.303	.272	-.160	-.148	-.193				5
6	-.136	-.124	-.126	-.356	-.306					.242	.278	.209	-.115	-.270					6
7	-.104	.022	-.259	-.311						.242	.247	-.053	-.107	-.257					7
8	-.132	-.183	-.277							.242	.018	-.071							8
9	-.216	-.214	-.259							.053	.018	-.048							9
10	-.132	-.224								.059	.003								10
11	-.124									.059									11
							$\alpha = 12^\circ$			$\delta = -20^\circ$									
1	.216	-.083	-.006	-.198		.148	.145										-.155		1
2	-.289	-.421	-.462	-.430	.311	-.089	-.094			.341		.379		.178	.081	.036			2
3	-.128	-.140		-.466	.036		-.326			.242	.270	.288		.112	.031	-.125			3
4	-.114	-.171	-.226	-.352	-.364	-.237	-.298			.252		.270	-.013	-.008	.031				4
5	-.161	-.171	-.116	-.341	-.278	-.336				.219	.300	.262	-.115	-.051	-.130				5
6	-.138	-.120	-.157	-.316	-.334					.247	.270	.165	-.087	-.211					6
7	-.130	.014	-.295	-.316						.211	.242	-.033	-.087	-.191					7
8	-.147	-.214	-.295							.247	.028	-.051							8
9	-.240	-.226	-.295							.033	.028	-.053							9
10	-.136	-.253								.033	-.008								10
11	-.134									.033									11
							$\alpha = 12^\circ$			$\delta = -10^\circ$									
1	.236	-.069	-.002	-.175		.153	.107										-.023		1
2	-.283	-.415	-.440	-.411	.023	-.260	-.283			.339		.400		.255	.222	.199			2
3	-.114	-.138		-.434	-.372		-.356			.262	.272	.283		.216	.155	-.053			3
4	-.100	-.159	-.200	-.271	-.364	-.278	-.334			.262		.234	.089	.127	.120				4
5	-.175	-.159	-.132	-.318	-.283	-.377				.196	.300	.244	-.018	.059	-.066				5
6	-.128	-.120	-.149	-.272	-.321					.234	.267	.211	-.048	-.120					6
7	-.122	.006	-.269	-.265						.209	.247	-.025	-.048	-.122					7
8	-.114	-.240	-.269							.229	.023	-.028							8
9	-.236	-.236	-.248							.028	.023	-.028							9
10	-.141	-.253								.059	-.003								10
11	-.147									.033									11

Table 7 Concluded

Pressure Coefficients on Delta Wing with Control

Configuration E M = 1.61 R = 1.7×10^6

Orif	Upper Surface at Station 1	2	3	4	5	6	7	8	9		Lower Surface at Station 1	2	3	4	5	6	7	8	9	Orif
								α = 12°			δ = 00°									
1	.232	-.083	-.008	-.177		-.043	-.079											.097		1
2	-.271	-.393	-.415	-.417	-.293	-.321	-.316				.328		.392		.377	.384	.349			2
3	-.122	-.130		-.407	-.346		-.356				.247	.257	.278		.341	.326	.046			3
4	-.106	-.165	-.189	-.261	-.331	-.288	-.341				.247		.257	.270	.278	.257				4
5	-.145	-.165	-.169	-.346	-.242	-.341					.206	.288	.239	.048	.288	.048				5
6	-.130	-.126	-.161	-.321	-.321						.252	.260	.252	.048	.069					6
7	-.110	-.055	-.263	-.321							.232	.244	.028	.048	.117					7
8	-.126	-.232	-.259								.237	.028	.028							8
9	-.232	-.218	-.248								.025	.048	.046							9
10	-.149	-.248									.053	.048								10
11	-.181										.048									11
								α = 12°			δ = 03°									
1	.255	-.053	.033	-.147		.010	-.010											.117		1
2	-.252	-.362	-.391	-.371	-.163	-.204	-.199				.359		.412		.517	.392	.349			2
3	-.081	-.112		-.387	-.244		-.298				.298	.290	.300		.418	.362	.046			3
4	-.065	-.140	-.179	-.277	-.244	-.204	-.252				.283		.270	.323	.306	.303				4
5	-.143	-.140	-.147	-.331	-.199	-.260					.232	.323	.255	.097	.316	.076				5
6	-.096	-.034	-.147	-.318	-.255						.280	.285	.295	.099	.071					6
7	-.083	-.028	-.246	-.318							.239	.255	.053	.066	.102					7
8	-.096	-.218	-.246								.239	.051	.053							8
9	-.210	-.236	-.250								.048	.074	.097							9
10	-.130	-.238									.069	.076								10
11	-.153										.066									11
								α = 12°			δ = 10°									
1	.231	-.079	.002	-.160		-.228	-.258											.396		1
2	-.270	-.391	-.422	-.387	-.368	-.394	-.353				.371		.404		.736	.624	.542			2
3	-.120	-.138		-.432	-.373		-.373				.284	.289	.294		.688	.563	.271			3
4	-.099	-.150	-.186	-.308	-.350	-.353	-.343				.284		.268	.401	.478	.486				4
5	-.144	-.152	-.191	-.307	-.332	-.371					.222	.315	.228	.120	.494	.294				5
6	-.130	-.081	-.237	-.210	-.363						.253	.274	.368	.008	.284					6
7	-.105	-.038	-.282	-.217							.233	.258	.120	-.049	.276					7
8	-.105	-.263	-.302								.243	.095	.113							8
9	-.209	-.282	-.266								.051	.130	.120							9
10	-.136	-.290									.069	.120								10
11	-.164										.089									11
								α = 12°			δ = 20°									
1	.229	-.073	-.004	-.162		-.210	-.235											.678		1
2	-.278	-.397	-.381	-.294	-.350	-.386	-.358				.358		.389		.913	.874	.688			2
3	-.116	-.142		-.219	-.350		-.373				.286	.297	.302		.867	.841	.596			3
4	-.097	-.158	-.219	-.268	-.307	-.340	-.348				.279		.263	.384	.841	.685				4
5	-.148	-.156	-.124	-.251	-.276	-.368					.220	.302	.217	.013	.759	.565				5
6	-.130	-.032	-.265	-.164	-.343						.256	.268	.460	-.107	.517					6
7	-.113	-.032	-.369	-.138							.225	.291	.174	-.118	.501					7
8	-.051	-.253	-.298								.235	.166	.133							8
9	-.158	-.284	-.164								.051	.192	.118							9
10	-.116	-.294									.120	.166								10
11	-.128										.194									11
								α = 12°			δ = 29°									
1	.219	-.089	-.002	-.166		-.166	-.199											.683		1
2	-.278	-.385	-.369	-.282	-.366	-.381	-.368				.355		.391		1.071	.974	.780			2
3	-.134	-.154		.320	-.361		-.386				.286	.276	.286		.979	1.000	.762			3
4	-.103	-.154	-.105	-.361	-.286	-.350	-.361				.281		.266	.297	1.036	.816				4
5	-.156	-.124	-.188	-.164	-.240	-.378					.228	.302	.251	-.072	.908	.696				5
6	-.138	-.026	-.298	-.133	-.340						.251	.268	.506	-.138	.678					6
7	-.034	-.024	-.345	-.107							.230	.404	.182	-.153	.601					7
8	.000	-.259	-.265								.245	.210	.128							8
9	-.144	-.282	-.164								.102	.187	.110							9
10	-.122	-.184									.256	.169								10
11	-.160										.289									11

Table 8

Pressure Coefficients on Delta Wing with Control

Configuration E M = 1.61 R = 4.2 x 10^6

Orif	Upper Surface at Station 1	2	3	4	5	6	7	8	9	Lower Surface at Station 1	2	3	4	5	6	7	8	9	Orif
								α = 00°		δ = -03°									
1	.385	.291	.291	.261		.251	.219										-.261		1
2	.069	.038	.034	.033	.073	.095	.114			.065		.038		.000	-.034	-.063			2
3	.027	.017		.030	.054		-.208			.035	.024	.024		-.001	-.040	-.229			3
4	.029	.005	-.016	.029	.025	.041	-.204			.035		-.011	-.028	-.020	-.045				4
5	.014	.027	.009	-.143	.003	-.165				.002	.045	-.016	-.165	-.018	-.184				5
6	.016	.051	.029	-.138	-.149					.063	.558	.002	-.162	-.163					6
7	.037	.029	-.128	-.145						.025	.016	-.148	-.157	-.118					7
8	.021	-.130	-.128							.021	-.142	-.154							8
9	-.126	-.125	-.134							-.129	-.140	-.146							9
10	-.077	-.125								-.096	-.145								10
11	-.126									-.131									11
								α = 00°		δ = 00°									
1	.379	.285	.286	.250		.296	.280										-.234		1
2	.057	.034	.033	.025	.033	.028	.030			.060		.029		.038	.029	.013			2
3	.021	.013		.013	.015		-.231			.031	.004	.019		.020	.002	-.202			3
4	.023	.002	-.016	-.002	-.005	-.010	-.213			.033		-.022	-.008	-.005	-.015				4
5	.008	.015	-.001	-.152	-.010	-.198				.002	.024	-.017	-.158	-.004	-.171				5
6	.006	.044	.011	-.154	-.160					.057	1.042	.007	-.153	-.154					6
7	.031	.025	-.148	-.156						.021	.016	-.147	-.149	-.130					7
8	.016	-.137	-.147							.020	-.141	-.145							8
9	-.134	-.133	-.155							-.135	-.138	-.143							9
10	-.079	-.137								-.100	-.139								10
11	-.137									-.136									11
								α = 00°		δ = 05°									
1	.373	.285	.285	.250		.255	.227										-.128		1
2	.057	.034	.029	.027	-.019	-.072	-.186			.057		.031		.129	.151	.147			2
3	.025	.010		-.015	-.023		-.292			.030	.011	.019		.095	.087	-.131			3
4	.023	.002	-.013	-.030	-.040	-.057	-.272			.029		-.017	.036	.030	.064				4
5	.009	.014	-.013	-.163	-.038	-.215				-.002	.023	-.008	-.156	.028	-.130				5
6	.003	.044	-.009	-.175	-.192					.051	.930	.029	-.148	-.112					6
7	.030	.019	-.158	-.175						.018	.012	-.129	-.152	-.098					7
8	.016	-.150	-.162							.013	-.136	-.124							8
9	-.128	-.154	-.162							-.138	-.124	-.129							9
10	-.087	-.154								-.106	-.126								10
11	-.141									-.135									11
								α = 00°		δ = 10°									
1	.377	.288	.286	.260		.163	.107										-.027		1
2	.063	.035	.034	.030	-.124	-.237	-.330			.061		.035		.234	.233	.257			2
3	.026	.014		-.079	-.050		-.358			.032	.019	.021		.351	.174	-.069			3
4	.021	.005	-.006	-.054	-.092	-.118	-.331			.034		-.015	.012	.080	.138				4
5	.009	.020	-.002	-.165	-.053	-.229				-.003	.023	-.006	-.176	.063	-.078				5
6	.010	.050	-.025	-.196	-.235					.054	.871	.060	-.189	-.064					6
7	.033	.025	-.171	-.193						.019	.014	-.108	-.173	-.057					7
8	.016	-.149	-.177							.015	-.124	-.104							8
9	-.124	-.157	-.176							-.137	-.109	-.110							9
10	-.082	-.160								-.107	-.105								10
11	-.136									-.128									11
								α = 00°		δ = 15°									
1	.372	.280	.277	.251		.054	-.021										.082		1
2	.057	.033	.028	.022	-.301	-.318	-.358			.052		.022		.318	.352	.359			2
3	.019	.010		-.149	-.082		-.408			.022	.014	.013		.307	.281	.004			3
4	.020	.002	-.015	-.101	-.161	-.299	-.399			.024		-.025	.011	.156	.220				4
5	.007	.016	.002	-.190	-.054	-.246				-.005	.017	-.025	-.210	.113	-.010				5
6	-.002	.044	-.065	-.204	-.302					.052	.802	.084	-.222	-.018					6
7	.025	.024	-.200	-.191						.018	.007	-.100	-.188	.020					7
8	.006	-.158	-.205							.007	-.118	-.101							8
9	-.128	-.173	-.200							-.143	-.103	-.109							9
10	-.085	-.184								-.111	-.101								10
11	-.134									-.120									11

Table 8 Continued

Pressure Coefficients on Delta Wing with Control

Configuration E M = 1.61 R = 4.2×10^6

Orif	Upper Surface at Station 1	2	3	4	5	6	7	8	9	Lower Surface at Station 1	2	3	4	5	6	7	8	9	Orif
								α = 00°			δ = 20°								
1	.374	.285	.278	.252		-.036	-.126										.213		1
2	.056	.029	.025	.021	-.364	-.352	-.386			.058		.030		.440	.473	.464			2
3	.020	.012		.015	-.135		-.429			.028	.020	.016		.382	.392	.095			3
4	.022	.002	-.013	-.170	-.183	-.378	-.414			.034		-.022	-.047	.292	.320				4
5	.009	.014	.031	-.200	-.057	-.322				-.002	.027	-.019	-.220	.186	.089				5
6	.000	.045	-.083	-.191	-.345					.057	.762	.119	-.276	.053					6
7	.028	.043	-.230	-.184						.019	.014	-.078	-.216	.084					7
8	.009	-.155	-.227							.010	-.091	-.086							8
9	-.155	-.174	-.227							-.134	-.073	-.101							9
10	-.074	-.187								-.100	-.073								10
11	-.120									-.092									11
								α = 00°			δ = 25°								
1	.375	.286	.279	.254		-.138	-.215										.363		1
2	.053	.031	.026	.025	-.400	-.384	-.413			.070		.037		.577	.588	.568			2
3	.020	.012		.270	-.173		-.446			.039	.035	.018		.557	.507	.197			3
4	.018	-.003	-.014	-.268	-.229	-.414	-.427			.048		-.019	-.129	.460	.435				4
5	.007	.013	.075	-.247	-.170	-.400				.010	.046	-.014	-.240	.276	.193				5
6	.000	.047	-.095	-.182	-.365					.071	.720	.153	-.282	.133					6
7	.025	.052	-.255	-.171						.032	.035	-.057	-.248	.175					7
8	.007	-.150	-.245							.019	-.059	-.067							8
9	-.110	-.176	-.252							-.120	-.050	-.105							9
10	-.065	-.193								-.076	-.048								10
11	-.110									-.045									11
								α = 00°			δ = 30°								
1	.378	.286	.281	.255		-.223	-.294										.516		1
2	.062	.036	.029	.032	-.421	-.414	-.435			.059		.035		.756	.708	.659			2
3	.022	.016		.533	-.243		-.458			.030	.020	.021		.697	.638	.324			3
4	.027	.005	-.010	-.344	-.259	-.438	-.406			.034		-.014	-.154	.629	.587				4
5	.007	.017	.142	-.308	-.281	-.431				-.003	.038	-.006	-.282	.398	.330				5
6	.005	.053	-.101	-.206	-.404					.060	.664	.167	-.298	.241					6
7	.032	.077	-.276	-.196						.017	.046	-.027	-.272	.290					7
8	.015	-.142	-.284							.000	-.047	-.060							8
9	-.074	-.181	-.274							-.130	-.027	-.109							9
10	-.038	-.197								-.055	-.023								10
11	-.080									-.006									11
								α = 03°			δ = -03°								
1	.383	.211	.237	.169		.280	.258										-.137		1
2	-.003	-.061	-.120	-.172	-.189	-.091	-.052			.121		.142		.115	.112	.086			2
3	-.018	-.029		-.048	-.050		-.318			.083	.073	.092		.072	.065	-.140			3
4	-.009	-.043	-.071	-.050	-.064	-.123	-.260			.083		.053	.021	.093	.032				4
5	-.034	-.038	-.038	-.191	-.062	-.244				.059	.104	.038	-.125	.041	-.108				5
6	-.022	.007	-.024	-.176	-.217					.102	.547	.050	-.127	-.117					6
7	-.005	-.011	-.166	-.171						.074	.065	-.115	-.120	-.100					7
8	-.016	-.163	-.164							.065	-.106	-.117							8
9	-.163	-.163	-.175							-.084	-.100	-.113							9
10	-.102	-.163								-.071	-.100								10
11	-.153									-.100									11
								α = 03°			δ = 00°								
1	.383	.203	.238	.168		.260	.237										-.155		1
2	-.004	-.063	-.121	-.170	-.144	-.154	-.167			.116		.141		.147	.137	.129			2
3	-.019	-.029		-.051	-.068		-.284			.083	.057	.087		.097	.092	-.141			3
4	-.012	-.047	-.066	-.059	-.069	-.061	-.262			.080		.053	.041	.055	.064				4
5	-.038	-.042	-.042	-.189	-.074	-.237				.062	.097	.041	-.110	.053	-.127				5
6	-.018	.007	-.036	-.181	-.195					.100	.833	.063	-.112	-.109					6
7	-.006	-.016	-.178	-.181						.071	.062	-.104	-.106	-.080					7
8	-.017	-.169	-.175							.064	-.103	-.108							8
9	-.166	-.168	-.179							-.089	-.096	-.104							9
10	-.102	-.167								-.073	-.093								10
11	-.156									-.105									11

Table 8 Continued

Pressure Coefficients on Delta Wing with Control

Configuration E M = 1.61 R = 4.2×10^6

Orif	Upper Surface at Station 1	2	3	4	5	6	7	8	9	Lower Surface at Station 1	2	3	4	5	6	7	8	9	Orif
							$\alpha = 03^\circ$			$\delta = 05^\circ$									
1	.382	.206	.241	.173		.170	.126										-.051		1
2	-.002	-.062	-.117	-.167	-.211	-.324	-.336			.107		.134		.305	.228	.233			2
3	-.020	-.028		-.091	-.113		-.386			.072	.056	.080		.205	.181	-.079			3
4	-.013	-.042	-.066	-.091	-.110	-.119	-.377			.072		.045	.073	.117	.132				4
5	-.040	-.035	-.057	-.205	-.112	-.270				.049	.087	.038	-.104	.098	-.072				5
6	-.023	.011	-.052	-.202	-.229					.091	.760	.081	-.098	-.071					6
7	-.007	-.020	-.191	-.199						.062	.050	-.091	-.124	-.045					7
8	-.020	-.173	-.189							.055	-.102	-.090							8
9	-.161	-.176	-.185							-.100	-.087	-.089							9
10	-.102	-.178								-.086	-.085								10
11	-.158									-.113									11
							$\alpha = 03^\circ$			$\delta = 10^\circ$									
1	.382	.210	.235	.164		.074	.020										.051		1
2	-.006	-.064	-.123	-.172	-.281	-.349	-.367			.117		.142		.386	.345	.341			2
3	-.015	-.030		-.175	-.092		-.414			.081	.071	.087		.467	.278	-.008			3
4	-.011	-.044	-.070	-.111	-.134	-.268	-.391			.082		.052	.088	.189	.217				4
5	-.039	-.042	-.055	-.188	-.101	-.274				.059	.096	.024	-.090	.166	-.010				5
6	-.024	.009	-.081	-.205	-.249					.101	.726	.123	-.147	.012					6
7	-.005	-.014	-.209	-.194						.070	.057	-.058	-.151	.016					7
8	-.019	-.183	-.207							.058	-.079	-.059							8
9	-.162	-.197	-.201							-.088	-.063	-.066							9
10	-.102	-.197								-.078	-.058								10
11	-.158									-.100									11
							$\alpha = 03^\circ$			$\delta = 15^\circ$									
1	.386	.212	.243	.172		-.005	-.079										.167		1
2	-.005	-.063	-.119	-.171	-.333	-.369	-.382			.115		.141		.444	.453	.434			2
3	-.014	-.030		-.371	-.099		-.428			.081	.075	.086		.440	.379	.072			3
4	-.010	-.040	-.067	-.157	-.182	-.337	-.401			.081		.050	.065	.297	.314				4
5	-.036	-.036	-.035	-.206	-.109	-.328				.059	.098	.014	-.120	.236	.065				5
6	-.020	.011	-.105	-.208	-.289					.103	.698	.156	-.195	.075					6
7	-.002	-.001	-.234	-.198						.071	.054	-.035	-.161	.091					7
8	-.014	-.181	-.230							.058	-.063	-.042							8
9	-.148	-.200	-.216							-.086	-.040	-.055							9
10	-.085	-.206								-.078	-.039								10
11	-.140									-.091									11
							$\alpha = 03^\circ$			$\delta = 20^\circ$									
1	.379	.211	.238	.169		-.110	-.179										.318		1
2	-.007	-.068	-.121	-.176	-.379	-.391	-.409			.102		.131		.532	.578	.538			2
3	-.011	-.029		-.071	-.171		-.442			.069	.066	.076		.499	.491	.170			3
4	-.014	-.046	-.071	-.252	-.211	-.390	-.413			.069		.040	.028	.436	.442				4
5	-.039	-.041	-.007	-.222	-.108	-.392				.046	.090	.001	-.158	.323	.164				5
6	-.028	.013	-.137	-.220	-.322					.090	.658	.181	-.245	.147					6
7	-.007	.009	-.250	-.204						.058	.045	-.015	-.184	.182					7
8	-.018	-.178	-.270							.045	-.054	-.040							8
9	-.140	-.205	-.259							-.099	-.032	-.056							9
10	-.080	-.216								-.085	-.032								10
11	-.134									-.079									11
							$\alpha = 03^\circ$			$\delta = 25^\circ$									
1	.381	.209	.238	.169		-.202	-.272										.446		1
2	-.006	-.064	-.123	-.167	-.413	-.419	-.436			.114		.138		.613	.680	.628			2
3	-.015	-.027		.253	-.259		-.455			.076	.079	.085		.678	.615	.276			3
4	-.014	-.039	-.068	-.352	-.238	-.429	-.398			.078		.050	-.011	.600	.554				4
5	-.040	-.038	.039	-.229	-.179	-.440				.056	.100	.007	-.190	.434	.284				5
6	-.025	.022	-.143	-.223	-.360					.099	.628	.213	-.259	.227					6
7	-.007	.025	-.287	-.192						.067	.067	.012	-.206	.272					7
8	-.013	-.177	-.277							.051	-.024	-.024							8
9	-.117	-.207	-.285							-.088	-.003	-.052							9
10	-.063	-.220								-.063	-.001								10
11	-.110									-.028									11

Table 8 Continued

Pressure Coefficients on Delta Wing with Control

Configuration E M = 1.61 R = 4.2×10^6

Orif	Upper Surface at Station 1	2	3	4	5	6	7	8	9	Lower Surface at Station 1	2	3	4	5	6	7	8	9	Orif
							α = 03°			δ = 30°									
1	.385	.209	.236	.168		-.261	-.319										.612		1
2	-.005	-.061	-.120	-.167	-.425	-.435	-.436			.118		.140		.772	.781	.688			2
3	-.016	-.026		.523	-.316		-.436			.082	.088	.089		.816	.738	.431			3
4	-.014	-.042	-.068	-.440	-.270	-.438	-.400			.081		.051	-.024	.780	.655				4
5	-.040	-.038	.088	-.306	-.253	-.435				.059	.099	.018	-.246	.570	.431				5
6	-.026	.048	-.152	-.227	-.387					.105	.593	.252	-.274	.337					6
7	-.005	.041	-.307	-.184						.072	.108	.034	-.237	.389					7
8	.001	-.175	-.288							.053	.007	-.020							8
9	-.084	-.210	-.297							-.083	.028	-.063							9
10	-.044	-.224								-.016	.020								10
11	-.078									.014									11
							α = 06°			δ = -03°									
1	.348	.134	.173	.039		.232	.208										-.093		1
2	-.063	-.219	-.372	-.340	-.246	-.275	-.271			.188		.239		.203	.176	.156			2
3	-.052	-.074		-.206	-.259		-.372			.142	.144	.174		.140	.123	-.100			3
4	-.040	-.077	-.107	-.124	-.166	-.194	-.336			.157		.121	.078	.108	.092				4
5	-.075	-.074	-.079	-.232	-.091	-.264				.122	.191	.106	-.055	.091	-.075				5
6	-.060	-.032	-.070	-.207	-.243					.154	.178	.107	-.081	-.086					6
7	-.041	-.041	-.195	-.201						.130	.124	-.062	-.082	-.087					7
8	-.052	-.181	-.194							.123	-.063	-.073							8
9	-.187	-.189	-.197							-.020	-.052	-.073							9
10	-.111	-.188								-.028	-.056								10
11	-.169									-.051									11
							α = 06°			δ = 00°									
1	.344	.118	.159	.025		.189	.175										-.102		1
2	-.075	-.236	-.325	-.356	-.200	-.223	-.224			.189		.241		.229	.204	.201			2
3	-.060	-.085		-.190	-.221		-.327			.144	.143	.172		.178	.158	-.104			3
4	-.051	-.088	-.115	-.149	-.122	-.144	-.299			.157		.125	.117	.117	.120				4
5	-.085	-.087	-.103	-.236	-.090	-.246				.122	.171	.114	-.047	.117	-.078				5
6	-.066	-.045	-.084	-.278	-.211					.157	.898	.130	-.053	-.057					6
7	-.048	-.057	-.216	-.220						.130	.126	-.047	-.048	-.024					7
8	-.063	-.198	-.220							.124	-.051	-.055							8
9	-.195	-.202	-.219							-.030	-.042	-.053							9
10	-.131	-.206								-.025	-.041								10
11	-.184									-.055									11
							α = 06°			δ = 05°									
1	.354	.128	.170	.037		.088	.053										.013		1
2	-.066	-.225	-.314	-.327	-.314	-.338	-.344			.183		.235		.374	.319	.310			2
3	-.050	-.076		-.126	-.276		-.384			.138	.136	.160		.330	.260	-.024			3
4	-.041	-.084	-.105	-.143	-.168	-.250	-.371			.150		.115	.162	.194	.209				4
5	-.076	-.078	-.113	-.238	-.135	-.285				.117	.167	.102	-.034	.184	-.020				5
6	-.058	-.030	-.093	-.227	-.252					.148	.845	.151	-.027	-.010					6
7	-.043	-.057	-.218	-.217						.122	.114	-.032	-.074	.020					7
8	-.056	-.197	-.218							.116	-.047	-.037							8
9	-.185	-.203	-.213							-.040	-.034	-.039							9
10	-.127	-.206								-.041	-.033								10
11	-.183									-.062									11
							α = 06°			δ = 10°									
1	.344	.123	.166	.034		-.015	-.068										.134		1
2	-.079	-.234	-.321	-.346	-.356	-.384	-.379			.181		.229		.504	.426	.405			2
3	-.061	-.081		-.200	-.330		-.409			.137	.132	.161		.487	.370	.053			3
4	-.048	-.089	-.107	-.144	-.188	-.313	-.386			.149		.108	.183	.286	.299				4
5	-.082	-.087	-.106	-.238	-.139	-.365				.113	.166	.074	-.020	.254	.063				5
6	-.066	-.029	-.122	-.229	-.279					.145	.819	.183	-.089	.070					6
7	-.045	-.051	-.241	-.216						.118	.102	-.007	-.134	.079					7
8	-.056	-.212	-.234							.109	-.042	-.015							8
9	-.184	-.233	-.221							-.039	-.020	-.025							9
10	-.121	-.225								-.048	-.017								10
11	-.181									-.066									11

Table 8 Continued

Pressure Coefficients on Delta Wing with Control

Configuration E M = 1.61 R = 4.2×10^6

Orif	Upper Surface at Station 1	2	3	4	5	6	7	8	9		Lower Surface at Station 1	2	3	4	5	6	7	8	9	Orif
								$\alpha = 06^\circ$			$\delta = 15^\circ$									
1	.346	.125	.166	.033		-.106	-.157											.276		1
2	-.073	-.228	-.318	-.329	-.378	-.408	-.393				.183		.229		.605	.541	.501			2
3	-.058	-.083		-.445	-.383		-.415				.139	.133	.162		.624	.472	.138			3
4	-.050	-.087	-.100	-.193	-.220	-.355	-.386				.151		.113	.181	.402	.407				4
5	-.078	-.082	-.079	-.264	-.141	-.405					.118	.171	.071	-.050	.338	.149				5
6	-.066	-.015	-.162	-.203	-.322						.148	.794	.221	-.145	.160					6
7	-.044	-.039	-.262	-.205							.122	.106	.024	-.162	.161					7
8	-.066	-.202	-.249								.112	-.018	.008							8
9	-.166	-.236	-.229								-.034	.003	-.075							9
10	-.107	-.243									-.046	.011								10
11	-.158										-.049									11
								$\alpha = 06^\circ$			$\delta = 20^\circ$									
1	.344	.125	.166	.033		-.181	-.232											.397		1
2	-.070	-.232	-.315	-.323	-.394	-.471	-.404				.187		.234		.697	.654	.595			2
3	-.057	-.078		-.238	-.407		-.423				.140	.136	.164		.545	.600	.238			3
4	-.051	-.085	-.072	-.324	-.239	-.377	-.386				.154		.116	.158	.564	.531				4
5	-.079	-.083	-.070	-.291	-.159	-.424					.119	.175	.073	-.078	.455	.260				5
6	-.064	.011	-.175	-.221	-.354						.150	.778	.262	-.188	.250					6
7	-.048	-.034	-.305	-.196							.129	.112	.056	-.140	.264					7
8	-.043	-.206	-.282								.110	.010	.019							8
9	-.144	-.226	-.248								-.032	.032	-.005							9
10	-.091	-.245									-.038	.036								10
11	-.143										-.022									11
								$\alpha = 06^\circ$			$\delta = 25^\circ$									
1	.345	.123	.168	.031		-.243	-.290											.546		1
2	-.071	-.225	-.316	-.333	-.411	-.434	-.424				.176		.225		.836	.773	.656			2
3	-.058	-.082		.176	-.413		-.433				.135	.130	.156		.607	.723	.378			3
4	-.048	-.086	-.054	-.410	-.260	-.407	-.382				.148		.109	.132	.759	.635				4
5	-.080	-.083	-.048	-.362	-.211	-.440					.110	.170	.068	-.150	.586	.388				5
6	-.064	.043	-.170	-.263	-.389						.145	.751	.294	-.219	.330					6
7	-.042	-.020	-.320	-.203							.120	.124	.076	-.119	.358					7
8	-.009	-.213	-.327								.102	.029	.019							8
9	-.104	-.241	-.282								-.038	.059	-.014							9
10	-.075	-.237									-.021	.051								10
11	-.125										.006									11
								$\alpha = 06^\circ$			$\delta = 30^\circ$									
1	.339	.118	.163	.028		-.295	-.335											.683		1
2	-.076	-.237	-.321	-.217	-.429	-.442	-.433				.174		.225		.975	.887	.717			2
3	-.061	-.088		.524	-.425		-.424				.131	.127	.157		.739	.860	.584			3
4	-.048	-.095	-.038	-.379	-.336	-.423	-.386				.145		.105	.103	.947	.709				4
5	-.082	-.086	-.016	-.441	-.247	-.434					.109	.168	.071	-.209	.719	.572				5
6	-.070	.075	-.202	-.276	-.147						.141	.723	.329	-.235	.438					6
7	-.046	-.014	-.324	-.159							.115	.175	.082	-.120	.482					7
8	.026	-.221	-.335								.096	.064	.010							8
9	-.076	-.253	-.302								-.038	.078	-.029							9
10	-.061	-.254									.031	.058								10
11	-.107										.058									11
								$\alpha = 09^\circ$			$\delta = -30^\circ$									
1	.269	.001	.082	-.120		-.186	-.174											-.369		1
2	-.166	-.363	-.406	-.438	.755	.344	.404				.269		.307		-.338	-.295	-.312			2
3	-.102	-.119		-.477	.449		-.028				.193	.201	.224		-.104	-.338	-.379			3
4	-.088	-.134	-.151	-.253	-.118	.113	-.007				.201		.176	-.196	-.204	-.340				4
5	-.120	-.122	-.090	-.371	-.081	-.058					.172	.204	.263	-.230	-.290	-.286				5
6	-.098	-.085	-.067	-.385	-.079						.166	.191	.101	-.181	-.365					6
7	-.093	-.031	-.225	-.378							.160	.200	-.122	-.159	-.362					7
8	-.107	-.148	-.210								.170	-.037	-.150							8
9	-.216	-.175	-.225								.022	-.052	-.147							9
10	-.091	-.191									.027	-.072								10
11	-.091										.001									11

Table 8 Continued

Pressure Coefficients on Delta Wing with Control

Configuration E M = 1.61 R = 4.2×10^6

Orif	Upper Surface at Station 1	2	3	4	5	6	7	8	9		Lower Surface at Station 1	2	3	4	5	6	7	8	9	Orif
							$\alpha = 09^\circ$				$\delta = -25^\circ$									
1	.264	-.007	.079	-.128		-.101	-.093													1
2	-.168	-.371	-.414	-.448	.595	.237	.287				.264	.195	.304		-.192	-.294	-.309	-.394		2
3	-.109	-.212		-.494	.335		-.099				.187		.218		-.060	-.327	-.386			3
4	-.091	-.135	-.153	-.251	-.265	.021	-.096				.196	.200	.168	-.128	-.195	-.206				4
5	-.126	-.137	-.074	-.340	-.145	-.146					.171	.188	.211	-.182	-.283	-.251				5
6	-.117	-.087	-.091	-.327	-.233						.163	.181	.107	-.164	-.388					6
7	-.093	-.049	-.236	-.309							.158	-.041	-.113	-.157	-.362					7
8	-.110	-.176	-.218								.164	-.052	-.130							8
9	-.223	-.202	-.232								.006	-.069	-.130							9
10	-.118	-.215									.013									10
11	-.124										-.021									11
							$\alpha = 09^\circ$				$\delta = -20^\circ$									
1	.261	-.011	.076	-.136		.032	.044													1
2	-.172	-.375	-.414	-.439	.435	.133	.175				.258	.194	.302		.092	-.190	-.250	-.403		2
3	-.111	-.123		-.507	.183		-.171				.186		.218		-.001	-.245	-.354			3
4	-.096	-.139	-.154	-.229	-.354	-.065	-.180				.191	.197	.168	-.065	-.148	-.033				4
5	-.131	-.137	-.087	-.302	-.212	-.226					.164	.186	.175	-.147	-.249	-.210				5
6	-.115	-.096	-.119	-.271	-.251						.158	.170	.114	-.148	-.374					6
7	-.094	-.057	-.238	-.276							.157	-.042	-.101	-.143	-.256					7
8	-.111	-.194	-.220								.160	-.049	-.117							8
9	-.234	-.206	-.235								.003	-.062	-.115							9
10	-.124	-.230									.007									10
11	-.140										-.026									11
							$\alpha = 09^\circ$				$\delta = -15^\circ$									
1	.276	.000	.085	-.117		.202	.194													1
2	-.159	-.351	-.401	-.432	.234	-.025	.007				.274	.207	.316		.138	.018	.003	-.225		2
3	-.093	-.108		-.474	-.047		-.305				.205		.234		.085	.037	-.188			3
4	-.080	-.123	-.152	-.215	-.335	-.190	-.297				.206	.213	.180	-.001	-.015	.004				4
5	-.120	-.119	-.085	-.290	-.206	-.327					.177	.200	.172	-.091	-.085	-.141				5
6	-.101	-.081	-.127	-.218	-.240						.176	.176	.131	-.105	-.233					6
7	-.085	-.046	-.224	-.249							.170	-.079	-.104		-.212					7
8	-.096	-.190	-.215								.176	-.028	-.084							8
9	-.214	-.206	-.223								.015	-.033	-.087							9
10	-.114	-.225									.024	-.047								10
11	-.137										-.017									11
							$\alpha = 09^\circ$				$\delta = -10^\circ$									
1	.290	.013	.103	-.099		.257	.236													1
2	-.148	-.343	-.392	-.416	.115	-.093	-.081				.258	.190	.301		.160	.106	.073	-.224		2
3	-.075	-.099		-.465	-.255		-.304				.182		.216		.127	.069	-.177			3
4	-.067	-.116	-.124	-.197	-.369	-.202	-.279				.190	.197	.165	.039	.037	.037				4
5	-.108	-.116	-.083	-.314	-.192	-.345					.163	.184	.159	-.064	-.045	-.131				5
6	-.083	-.067	-.116	-.236	-.255						.156	.163	.119	-.102	-.183					6
7	-.067	-.043	-.213	-.255							.156	-.037	-.077	-.102	-.200					7
8	-.091	-.189	-.205								.158	-.047	-.083							8
9	-.205	-.197	-.213								-.008	-.059	-.081							9
10	-.108	-.213									.005									10
11	-.140										-.031									11
							$\alpha = 09^\circ$				$\delta = -05^\circ$									
1	.284	.010	.098	-.102		.186	.148													1
2	-.153	-.349	-.388	-.417	-.160	-.339	-.339				.270	.202	.312		.235	.212	.200	-.087		2
3	-.090	-.095		-.431	-.366		-.413				.198		.226		.174	.153	-.096			3
4	-.076	-.119	-.139	-.220	-.297	-.294	-.388				.205	.207	.180	.103	.125	.117				4
5	-.106	-.115	-.115	-.301	-.204	-.383					.176	.198	.175	-.026	.097	-.067				5
6	-.090	-.066	-.102	-.263	-.276						.174	.177	.147	-.056	-.108					6
7	-.074	-.065	-.229	-.213							.168	-.028	-.045	-.064	-.107					7
8	-.085	-.202	-.218								.173	-.028	-.054							8
9	-.210	-.214	-.217								.006	-.033	-.047							9
10	-.129	-.214									.022									10
11	-.156										-.017									11

Table 8 Continued

Pressure Coefficients on Delta Wing with Control

Configuration E M = 1.61 R = 4.2 × 10^6

Orif	Upper Surface at Station 1	2	3	4	5	6	7	8	9	Lower Surface at Station 1	2	3	4	5	6	7	8	9	Orif
								α = 09°		δ = -03°									
1	.289	.037	.096	-.065		.131	.112										-.060		1
2	-.145	-.346	-.391	-.425	-.257	-.341	-.352			.241		.309		.258	.248	.234			2
3	-.087	-.107		-.404	-.326		-.402			.196	.189	.222		.184	.192	-.080			3
4	-.074	-.118	-.118	-.297	-.305	-.273	-.393			.202		.174	.122	.151	.141				4
5	-.109	-.117	-.122	-.312	-.228	-.385				.168	.245	.163	-.022	.124	-.041				5
6	-.096	-.079	-.117	-.292	-.273					.186	1.231	.145	-.054	-.071					6
7	-.074	-.077	-.234	-.221						.165	.163	-.032	-.050	-.078					7
8	-.084	-.213	-.231							.174	-.031	-.044							8
9	-.214	-.216	-.228							.015	-.025	-.042							9
10	-.136	-.223								-.003	-.023								10
11	-.186									-.029									11
								α = 09°		δ = 00°									
1	.279	.007	.086	-.119		.090	.036										-.005		1
2	-.151	-.349	-.394	-.431	-.377	-.401	-.404			.270		.312		.291	.296	.292			2
3	-.090	-.107		-.416	-.318		-.421			.201	.206	.226		.236	.237	-.037			3
4	-.075	-.123	-.148	-.292	-.306	-.347	-.411			.205		.179	.167	.193	.193				4
5	-.109	-.121	-.145	-.314	-.238	-.380				.176	.212	.170	-.001	.182	-.009				5
6	-.094	-.077	-.120	-.285	-.280					.173	.197	.178	-.013	-.008					6
7	-.081	-.079	-.241	-.263						.173	.170	-.016	-.009	.012					7
8	-.092	-.218	-.241							.167	-.020	-.024							8
9	-.215	-.219	-.236							.000	-.009	-.019							9
10	-.137	-.224								.020	-.012								10
11	-.183									-.024									11
								α = 09°		δ = 03°									
1	.277	.007	.093	-.113		.025	-.038										-.063		1
2	-.145	-.344	-.396	-.423	-.355	-.375	-.372			.275		.315		.384	.367	.344			2
3	-.079	-.104		-.362	-.370		-.393			.206	.206	.232		.305	.295	.007			3
4	-.076	-.119	-.137	-.241	-.296	-.334	-.380			.213		.177	.215	.244	.247				4
5	-.102	-.119	-.137	-.274	-.225	-.388				.181	.215	3.167	.021	.232	.036				5
6	-.096	-.074	-.128	-.272	-.279					.175	.198	.203	.019	.026					6
7	-.074	-.004	-.243	-.258						.177	.174	.004	.015	.046					7
8	-.095	-.223	-.248							.171	-.007	.000							8
9	-.204	-.222	-.239							-.002	.002	.006							9
10	-.140	-.225								.021	.002								10
11	-.183									-.020									11
								α = 09°		δ = 05°									
1	.276	.033	.086	-.075		-.030	-.082										.111		1
2	-.152	-.346	-.391	-.408	-.414	-.435	-.434			.243		.311		.482	.395	.381			2
3	-.093	-.114		-.371	-.392		-.443			.194	.187	.233		.395	.340	.038			3
4	-.082	-.125	-.141	-.223	-.325	-.399	-.437			.207		.178	.231	.300	.284				4
5	-.114	-.116	-.154	-.275	-.237	-.419				.173	.258	.162	.023	.274	.066				5
6	-.101	-.078	-.145	-.263	-.292					.190	.970	.208	.019	.057					6
7	-.083	-.092	-.249	-.261						.162	.166	.006	-.044	.082					7
8	-.092	-.221	-.255							.162	-.008	.005							8
9	-.216	-.230	-.255							-.001	.008	.004							9
10	-.155	-.234								-.013	.011								10
11	-.207									-.022									11
								α = 09°		δ = 10°									
1	.276	.033	.083	-.074		-.125	-.172										.236		1
2	-.153	-.350	-.402	-.413	-.424	-.440	-.439			.245		.311		.644	.495	.469			2
3	-.096	-.111		-.426	-.420		-.436			.198	.194	.231		.544	.445	.116			3
4	-.083	-.127	-.094	-.169	-.380	-.417	-.418			.210		.177	.268	.377	.384				4
5	-.116	-.118	-.149	-.262	-.253	-.435				.174	.258	.139	.049	.349	.151				5
6	-.099	-.064	-.185	-.251	-.324					.192	.918	.252	-.031	.149					6
7	-.080	-.082	-.261	-.244						.166	.160	.039	-.088	.159					7
8	-.087	-.239	-.262							.165	.007	.034							8
9	-.202	-.262	-.252							.007	.030	.022							9
10	-.136	-.271								-.008	.034								10
11	-.190									-.012									11

Table 8 Continued

Pressure Coefficients on Delta Wing with Control

Configuration E M = 1.61 R = 4.2×10^6

Orif	Upper Surface at Station 1	2	3	4	5	6	7	8	9	Lower Surface at Station 1	2	3	4	5	6	7	8	9	Orif
							$\alpha = 09^\circ$			$\delta = 15^\circ$									
1	.282	.034	.091	-.069		-.220	-.271										.358		1
2	-.148	-.344	-.389	-.399	-.430	-.455	-.432			.246		.313		.654	.615	.568			2
3	-.085	-.108		-.428	-.447		-.416			.199	.202	.232		.728	.568	.212			3
4	-.073	-.122	-.072	-.135	-.426	-.423	-.391			.213		.183	.283	.487	.505				4
5	-.112	-.115	-.096	-.244	-.257	-.452				.176	.261	.130	.004	.450	.261				5
6	-.097	-.025	-.216	-.264	-.401					.194	.858	.292	-.100	.255					6
7	-.080	-.056	-.274	-.220						.170	.162	.077	-.133	.245					7
8	-.078	-.229	-.248							.164	.033	.059							8
9	-.180	-.260	-.238							.013	.058	.041							9
10	-.114	-.270								-.007	.065								10
11	-.159									.012									11
							$\alpha = 09^\circ$			$\delta = 20^\circ$									
1	.276	.035	.091	-.071		-.261	-.307										.492		1
2	-.147	-.345	-.395	-.393	-.432	-.455	-.395			.250		.318		.762	.734	.629			2
3	-.084	-.110		-.308	-.456		-.407			.204	.212	.239		.734	.683	.336			3
4	-.071	-.127	-.048	-.022	-.441	-.416	-.380			.218		.183	.261	.675	.607				4
5	-.106	-.117	-.127	-.250	-.251	-.425				.178	.266	.136	-.028	.572	.372				5
6	-.097	.008	-.213	-.198	-.428					.198	.826	.340	-.156	.344					6
7	-.076	-.065	-.311	-.182						.176	.174	.115	-.164	.346					7
8	-.053	-.220	-.248							.164	.060	.067							8
9	-.145	-.259	-.227							.010	.088	.042							9
10	-.105	-.277								.005	.091								10
11	-.149									.036									11
							$\alpha = 09^\circ$			$\delta = 25^\circ$									
1	.282	.037	.097	-.059		-.303	-.343										.648		1
2	-.149	-.339	-.388	-.236	-.442	-.465	-.379			.247		.311		.893	.842	.683			2
3	-.089	-.105		.107	-.467		-.398			.197	.207	.230		.788	.807	.511			3
4	-.074	-.117	-.022	-.003	-.450	-.432	-.366			.212		.177	.231	.865	.681				4
5	-.113	-.111	-.078	-.223	-.277	-.389				.172	.263	.133	-.100	.711	.513				5
6	-.095	.041	-.221	-.162	-.449					.192	.788	.375	-.175	.435					6
7	-.072	-.068	-.319	-.134						.170	.202	.128	-.187	.461					7
8	.001	-.227	-.262							.158	.088	.068							8
9	-.109	-.246	-.170							.001	.113	.031							9
10	-.088	-.261								.039	.101								10
11	-.141									.075									11
							$\alpha = 09^\circ$			$\delta = 30^\circ$									
1	.288	.039	.099	-.057		-.328	-.360										.712		1
2	-.143	-.341	-.383	-.203	-.442	-.455	-.374			.247		.312		1.012	.951	.761			2
3	-.085	-.101		.464	-.448		-.379			.198	.215	.232		.886	.945	.705			3
4	-.068	-.117	.059	-.153	-.445	-.425	-.353			.219		.181	.195	1.033	.753				4
5	-.109	-.096	-.142	-.192	-.324	-.389				.173	.266	.146	-.143	.815	.680				5
6	-.093	.068	-.207	-.104	-.453					.195	.758	.407	-.180	.561					6
7	-.043	-.065	-.306	-.124						.175	.265	.132	-.192	.564					7
8	.033	-.234	-.226							.161	.125	.059							8
9	-.087	-.261	-.224							.016	.128	.023							9
10	-.083	-.245								.103	.106								10
11	-.141									.154									11
							$\alpha = 12^\circ$			$\delta = -30^\circ$									
1	.194	-.118	-.035	-.223		-.172	-.106										-.364		1
2	-.306	-.425	-.467	-.485	.772	.263	.307			.364		.416		-.183	-.241	-.267			2
3	-.132	-.189		-.490	.497		-.098			.293	.296	.308		-.055	-.287	-.353			3
4	-.118	-.185	-.269	-.379	-.177	-.021	-.100			.292		.274	-.128	-.191	-.155				4
5	-.152	-.193	-.160	-.423	-.244	-.202				.246	.309	.348	-.183	-.294	-.256				5
6	-.140	-.187	-.124	-.368	-.305					.267	.291	.198	-.136	-.377					6
7	-.133	-.095	-.282	-.353						.256	.280	-.049	-.108	-.404					7
8	-.144	-.198	-.308							.274	.033	-.079							8
9	-.247	-.225	-.277							.089	.023	-.080							9
10	-.108	-.234								.074	.000								10
11	-.108									.057									11

Table 8 Continued

Pressure Coefficients on Delta Wing with Control

Configuration E M = 1.61 R = 4.2×10^6

Orif	Upper Surface at Station 1	2	3	4	5	6	7	8	9	Lower Surface at Station 1	2	3	4	5	6	7	8	9	Orif
								$\alpha = 12^\circ$		$\delta = -25^\circ$									
1	.196	-.118	-.037	-.221		-.043	.023										-.331		1
2	-.305	-.425	-.471	-.488	.621	.165	.191			.363		.416		.121	-.143	-.162			2
3	-.138	-.194		-.494	.407		-.184			.290	.298	.308		.000	-.203	-.286			3
4	-.109	-.184	-.268	-.378	-.368	-.110	-.191			.298		.273	-.057	-.148	-.016				4
5	-.155	-.195	-.126	-.397	-.253	-.279				.253	.310	.301	-.136	-.258	-.206				5
6	-.143	-.164	-.146	-.323	-.331					.268	.293	.204	-.110	-.378					6
7	-.131	-.087	-.282	-.319						.254	.270	-.043	-.101	-.376					7
8	-.135	-.208	-.319							.269	.034	-.064							8
9	-.243	-.227	-.285							.076	.024	-.062							9
10	-.125	-.238								.064	.005								10
11	-.127									.054									11
								$\alpha = 12^\circ$		$\delta = -20^\circ$									
1	.186	-.122	-.046	-.226		.099	.142										-.283		1
2	-.310	-.439	-.479	-.496	.473	.064	.075			.361		.414		.169	-.024	-.039			2
3	-.143	-.200		-.509	.212		-.257			.286	.293	.300		.087	-.075	-.224			3
4	-.115	-.191	-.283	-.366	-.434	-.181	-.261			.291		.267	-.007	-.104	-.002				4
5	-.160	-.203	-.140	-.365	-.275	-.333				.249	.303	.276	-.109	-.223	-.175				5
6	-.148	-.174	-.160	-.308	-.333					.264	.290	.206	-.098	-.361					6
7	-.137	-.073	-.292	-.303						.245	.257	-.037	-.094	-.331					7
8	-.142	-.222	-.305							.263	.030	-.053							8
9	-.256	-.238	-.300							.069	.025	-.052							9
10	-.149	-.260								.059	.007								10
11	-.149									.046									11
								$\alpha = 12^\circ$		$\delta = -15^\circ$									
1	.191	-.125	-.042	-.220		.249	.243										-.174		1
2	-.306	-.428	-.475	-.485	.304	-.065	-.103			.361		.414		.204	.127	.097			2
3	-.137	-.192		-.500	-.039		-.343			.288	.295	.305		.154	.098	-.154			3
4	-.120	-.186	-.277	-.347	-.422	-.257	-.318			.292		.271	.052	-.003	.050				4
5	-.156	-.195	-.160	-.331	-.289	-.378				.249	.308	.266	-.064	-.116	-.129				5
6	-.139	-.170	-.171	-.300	-.327					.269	.293	.208	-.066	-.272					6
7	-.133	-.072	-.306	-.290						.251	.255	-.026	-.071	-.238					7
8	-.139	-.229	-.293							.264	.036	-.034							8
9	-.247	-.243	-.291							.070	.027	-.035							9
10	-.152	-.262								.060	.009								10
11	-.160									.041									11
								$\alpha = 12^\circ$		$\delta = -10^\circ$									
1	.190	-.127	-.041	-.225		.203	.150										-.095		1
2	-.303	-.429	-.476	-.496	.145	-.212	-.331			.361		.411		.243	.212	.193			2
3	-.140	-.198		-.501	-.308		-.394			.287	.294	.300		.211	.154	-.100			3
4	-.123	-.187	-.273	-.317	-.409	-.310	-.388			.292		.276	.104	.111	.113				4
5	-.157	-.208	-.174	-.331	-.285	-.402				.248	.305	.279	-.024	-.024	-.082				5
6	-.140	-.171	-.174	-.279	-.327					.267	.292	.209	-.046	-.088					6
7	-.133	-.088	-.289	-.267						.251	.266	-.011	-.049	-.189					7
8	-.133	-.242	-.295							.265	.035	-.018							8
9	-.253	-.253	-.292							.066	.026	-.018							9
10	-.161	-.267								.070	.015								10
11	-.173									.046									11
								$\alpha = 12^\circ$		$\delta = -05^\circ$									
1	.199	-.107	-.037	-.228		.068	.011										.003		1
2	-.297	-.425	-.471	-.486	-.166	-.425	-.422			.360		.410		.307	.294	.277			2
3	-.129	-.190		-.483	-.423		-.431			.289	.295	.309		.246	.233	-.034			3
4	-.105	-.185	-.264	-.297	-.373	-.360	-.419			.292		.283	.167	.204	.198				4
5	-.155	-.195	-.186	-.343	-.296	-.400				.249	.301	.273	.019	.116	-.017				5
6	-.140	-.167	-.187	-.280	-.337					.267	.296	.226	-.007	-.080					6
7	-.127	-.110	-.276	-.242						.250	.258	.012	-.015	-.110					7
8	-.131	-.253	-.269							.267	.034	.004							8
9	-.245	-.242	-.273							.074	.034	.006							9
10	-.169	-.267								.068	.025								10
11	-.187									.043									11

Table 8 Continued

Pressure Coefficients on Delta Wing with Control

Configuration E M = 1.61 R = 4.2×10^6

Orif	Upper Surface at Station 1	2	3	4	5	6	7	8	9	Lower Surface at Station 1	2	3	4	5	6	7	8	9	Orif
							$\alpha = 12^\circ$			$\delta = 00^\circ$									
1	.199	-.111	-.036	-.221		-.035	-.097										.098		1
2	-.298	-.431	-.474	-.490	-.348	-.425	-.421			.359		.411		.361	.371	.364			2
3	-.133	-.194		-.479	-.420		-.424			.286	.293	.302		.317	.324	.030			3
4	-.108	-.188	-.273	-.339	-.371	-.389	-.407			.293		.274	.243	.272	.280				4
5	-.160	-.199	-.216	-.340	-.310	-.382				.246	.302	.257	.063	.265	.058				5
6	-.138	-.171	-.167	-.321	-.348					.264	.289	.256	.044	.056					6
7	-.135	-.116	-.278	-.245						.247	.253	.039	.044	.071					7
8	-.135	-.269	-.269							.254	.041	.032							8
9	-.252	-.254	-.269							.059	.047	.042							9
10	-.177	-.263								.064	.043								10
11	-.201									.038									11
							$\alpha = 12^\circ$			$\delta = 03^\circ$									
1	.189	-.127	-.048	-.227		-.112	-.164										.152		1
2	-.316	-.435	-.475	-.500	-.303	-.395	-.390			.349		.406		.446	.427	.413			2
3	-.137	-.200		-.444	-.425		-.389			.279	.286	.294		.388	.385	.068			3
4	-.119	-.193	-.281	-.357	-.400	-.362	-.377			.287		.263	.292	.334	.337				4
5	-.160	-.199	-.222	-.383	-.340	-.368				.242	.301	.252	.081	.314	.099				5
6	-.146	-.172	-.179	-.377	-.366					.260	.277	.280	.076	.091					6
7	-.141	-.138	-.288	-.387						.242	.250	.053	.080	.110					7
8	-.141	-.273	-.282							.244	.044	.053							8
9	-.257	-.255	-.276							.042	.055	.061							9
10	-.178	-.265								.055	.051								10
11	-.212									.036									11
							$\alpha = 15^\circ$			$\delta = -30^\circ$									
1	.152	-.162	-.151	-.256		-.163	-.058										-.347		1
2	-.356	-.450	-.486	-.502	.755	.204	.230			.412		.450		.048	-.165	-.190			2
3	-.153	-.245		-.505	.568		-.154			.347	.342	.359		-.012	-.182	-.297			3
4	-.138	-.221	-.357	-.411	-.223	-.095	-.161			.349		.336	-.050	-.177	-.055				4
5	-.182	-.235	-.261	-.424	-.336	-.264				.307	.366	.423	-.142	-.254	-.230				5
6	-.164	-.197	-.210	-.405	-.338					.314	.393	.271	-.079	-.367					6
7	-.148	-.121	-.318	-.338						.336	.349	.006	-.057	-.398					7
8	-.159	-.206	-.326							.385	.092	-.023							8
9	-.266	-.227	-.335							.135	.085	-.022							9
10	-.133	-.249								.114	.060								10
11	-.105									.107									11
							$\alpha = 15^\circ$			$\delta = -25^\circ$									
1	.148	-.167	-.157	-.257		.013	.123										-.292		1
2	-.360	-.453	-.491	-.502	.614	.114	.118			.413		.451		.211	-.049	-.038			2
3	-.153	-.241		-.509	.404		-.234			.342	.346	.360		.068	-.106	-.202			3
4	-.135	-.221	-.364	-.409	-.422	-.174	-.242			.346		.339	.013	-.124	.021				4
5	-.183	-.238	-.242	-.374	-.358	-.330				.305	.359	.387	-.093	-.174	-.182				5
6	-.167	-.204	-.220	-.390	-.339					.310	.394	.282	-.066	-.360					6
7	-.152	-.116	-.316	-.323						.335	.347	.016	-.052	-.346					7
8	-.161	-.217	-.329							.376	.091	-.004							8
9	-.272	-.243	-.345							.129	.090	-.008							9
10	-.145	-.257								.109	.061								10
11	-.124									.103									11
							$\alpha = 15^\circ$			$\delta = -20^\circ$									
1	.146	-.166	-.157	-.259		.203	.253										-.193		1
2	-.361	-.451	-.493	-.506	.460	.006	-.016			.414		.456		.223	.108	.090			2
3	-.152	-.239		-.510	.200		-.312			.344	.350	.365		.155	.099	-.161			3
4	-.134	-.217	-.364	-.400	-.457	-.238	-.293			.349		.340	.074	-.085	.064				4
5	-.182	-.237	-.241	-.368	-.351	-.373				.310	.365	.372	-.061	-.143	-.145				5
6	-.166	-.201	-.217	-.333	-.342					.313	.398	.291	-.042	-.348					6
7	-.148	-.098	-.321	-.299						.338	.350	.030	-.034	-.259					7
8	-.159	-.236	-.329							.370	.103	.015							8
9	-.267	-.250	-.331							.129	.094	.011							9
10	-.153	-.264								.115	.066								10
11	-.143									.110									11

Table 8 Continued

Pressure Coefficients on Delta Wing with Control

Configuration E M = 1.61 R = 4.2×10^6

Orif	Upper Surface at Station 1	2	3	4	5	6	7	8	9		Lower Surface at Station 1	2	3	4	5	6	7	8	9	Orif
								$\alpha = 15^\circ$			$\delta = -15^\circ$									
1	.151	-.161	-.151	-.252		.256	.189											-.101		1
2	-.358	-.449	-.484	-.496	.327	-.106	-.163				.416		.457		.263	.223	.188			2
3	-.145	-.235		-.499	-.041		-.369				.348	.346	.363		.225	.174	-.093			3
4	-.132	-.215	-.358	-.385	-.442	-.282	-.361				.351		.351	.125	.014	.132				4
5	-.180	-.239	-.247	-.369	-.342	-.393					.305	.365	.378	-.015	-.067	-.097				5
6	-.161	-.197	-.224	-.327	-.338						.313	.398	.291	-.015	-.286					6
7	-.144	-.085	-.317	-.284							.335	.354	.045	-.013	-.210					7
8	-.155	-.241	-.312								.366	.104	.033							8
9	-.265	-.262	-.321								.134	.092	.030							9
10	-.157	-.268									.123	.071								10
11	.156										.117									11
								$\alpha = 15^\circ$			$\delta = -10^\circ$									
1	.144	-.170	-.160	-.263		.117	.035											-.022		1
2	-.366	-.456	-.496	-.506	.144	-.284	-.404				.410		.448		.303	.283	.266			2
3	-.153	-.239		-.502	-.378		-.420				.338	.347	.357		.294	.239	-.043			3
4	-.144	-.223	-.371	-.345	-.433	-.331	-.406				.345		.355	.181	.157	.199				4
5	-.188	-.241	-.270	-.373	-.342	-.414					.301	.360	.391	.031	.039	-.043				5
6	-.171	-.203	-.232	-.307	-.350						.307	.391	.290	.005	-.153					6
7	-.153	-.104	-.311	-.279							.332	.353	.054	.010	-.162					7
8	-.161	-.259	-.324								.366	.094	.042							8
9	-.276	-.278	-.328								.136	.088	.043							9
10	-.176	-.281									.122	.074								10
11	-.184										.105									11
								$\alpha = 15^\circ$			$\delta = -05^\circ$									
1	.145	-.172	-.156	-.264		-.018	-.094											.073		1
2	-.365	-.458	-.496	-.505	-.134	-.405	-.405				.408		.448		.352	.346	.342			2
3	-.154	-.243		-.481	-.433		-.414				.335	.340	.365		.296	.308	.018			3
4	-.141	-.219	-.369	-.355	-.408	-.355	-.400				.340		.361	.231	.257	.266				4
5	-.184	-.238	-.284	-.369	-.342	-.402					.302	.358	.367	.063	.155	.026				5
6	-.169	-.203	-.228	-.321	-.357						.308	.392	.301	.041	-.026					6
7	-.154	-.120	-.321	-.266							.327	.338	.069	.033	-.107					7
8	-.162	-.264	-.317								.363	.091	.062							8
9	-.275	-.274	-.313								.130	.094	.062							9
10	-.187	-.276									.111	.084								10
11	-.196										.096									11
								$\alpha = 15^\circ$			$\delta = 00^\circ$									
1	.145	-.174	-.164	-.275		-.161	-.206											.216		1
2	-.377	-.456	-.499	-.503	-.334	-.375	-.358				.409		.448		.416	.450	.443			2
3	-.159	-.247		-.485	-.410		-.374				.336	.342	.355		.390	.422	.113			3
4	-.146	-.227	-.378	-.378	-.393	-.347	-.357				.347		.337	.350	.368	.377				4
5	-.188	-.245	-.318	-.400	-.333	-.374					.304	.359	.361	.126	.368	.136				5
6	-.172	-.209	-.232	-.381	-.360						.309	.374	.351	.115	.133					6
7	-.161	-.146	-.321	-.293							.330	.346	.106	.123	.151					7
8	-.161	-.292	-.311								.342	.107	.107							8
9	-.279	-.291	-.306								.124	.113	.108							9
10	-.200	-.291									.117	.105								10
11	-.220										.113									11
								$\alpha = 15^\circ$			$\delta = 03^\circ$									
1	.149	-.165	-.159	-.255		-.170	-.200											.270		1
2	-.365	-.456	-.498	-.494	-.271	-.328	-.317				.405		.447		.535	.499	.481			2
3	-.156	-.240		-.467	-.382		-.354				.335	.339	.358		.490	.478	.148			3
4	-.140	-.227	-.369	-.387	-.365	-.310	-.333				.346		.333	.405	.434	.431				4
5	-.186	-.245	-.299	-.414	-.316	-.360					.304	.356	.357	.156	.424	.178				5
6	-.167	-.201	-.232	-.405	-.340						.304	.364	.375	.155	.173					6
7	-.153	-.153	-.312	-.322							.326	.346	.127	.149	.190					7
8	-.160	-.283	-.306								.328	.117	.130							8
9	-.270	-.291	-.306								.116	.125	.127							9
10	-.195	-.291									.120	.115								10
11	-.226										.122									11

Table 8 Continued

Pressure Coefficients on Delta Wing with Control

Configuration E M = 1.61 R = 4.2×10^6

Orif	Upper Surface at Station 1	2	3	4	5	6	7	8	9		Lower Surface at Station 1	2	3	4	5	6	7	8	9	Orif
								$\alpha = -03^\circ$			$\delta = -03^\circ$									
1	.362	.327	.238	.246		.136	.099											-.337		1
2	.131	.127	.147	.158	.209	.215	.228				-.020		-.119		-.212	-.250	-.282			2
3	.073	.084		.093	.198		-.131				-.010	-.046	-.046		-.072	-.206	-.341			3
4	.084	.053	.059	.084	.107	.122	-.119				-.008		-.063	-.081	-.095	-.122				4
5	.061	.070	.071	-.098	.083	-.102					-.038	.030	-.066	-.209	-.082	-.242				5
6	.065	.110	.081	-.088	-.088						.034	.831	-.045	-.193	-.206					6
7	.081	.077	-.087	-.097							-.017	-.030	-.191	-.190	-.170					7
8	.065	-.094	-.093								-.023	-.175	-.186							8
9	-.097	-.084	-.092								-.163	-.170	-.177							9
10	-.052	-.081									-.115	-.178								10
11	-.102										-.157									11
								$\alpha = -03^\circ$			$\delta = 00^\circ$									
1	.350	.327	.233	.246		.193	.162											-.351		1
2	.123	.129	.144	.163	.150	.162	.164				-.019		-.124		-.164	-.216	-.244			2
3	.066	.073		.070	.111		-.156				-.013	-.048	-.051		-.074	-.108	-.296			3
4	.075	.047	.059	.052	.069	.089	-.150				-.008		-.069	-.066	-.091	-.098				4
5	.062	.064	.061	-.101	.054	-.132					-.040	.028	-.063	-.202	-.074	-.231				5
6	.064	.109	.069	-.098	-.114						.031	.792	-.037	-.194	-.198					6
7	.076	.073	-.099	-.103							-.014	-.024	-.187	-.191						7
8	.064	-.103	-.105								-.025	-.175	-.181							8
9	-.096	-.102	-.103								-.169	-.170	-.180							9
10	-.050	-.098									-.116	-.176								10
11	-.102										-.153									11
								$\alpha = -03^\circ$			$\delta = 05^\circ$									
1	.359	.326	.227	.238		.293	.265											-.274		1
2	.124	.127	.133	.149	.090	.066	.054				-.018		-.119		-.073	-.047	-.023			2
3	.070	.075		.027	.059		-.215				-.011	-.037	-.044		-.055	-.032	-.228			3
4	.079	.055	.055	.005	.022	.022	-.176				-.007		-.065	-.074	-.076	-.040				4
5	.062	.059	.048	-.121	.012	-.156					-.039	.030	-.049	-.195	-.048	-.196				5
6	.056	.106	.032	-.138	-.157						.033	.754	-.019	-.185	-.181					6
7	.082	.070	-.122	-.140							-.017	-.016	-.173	-.178	-.144					7
8	.060	-.117	-.132								-.027	-.164	-.164							8
9	-.090	-.114	-.127								-.168	-.155	-.172							9
10	-.047	-.115									-.109	-.158								10
11	-.104										-.143									11
								$\alpha = -03^\circ$			$\delta = 10^\circ$									
1	.360	.323	.223	.239		.258	.229											-.161		1
2	.128	.124	.137	.152	.040	-.028	-.114				-.020		-.126		.086	.115	.118			2
3	.069	.075		.019	.017		-.260				-.011	-.036	-.047		.033	.036	-.157			3
4	.079	.043	.047	-.034	-.023	-.022	-.242				-.006		-.067	-.088	-.055	.029				4
5	.066	.061	.040	-.119	-.033	-.192					-.046	.027	-.032	-.215	-.021	-.154				5
6	.061	.109	.012	-.156	-.208						.035	.726	-.005	-.218	-.151					6
7	.081	.070	-.140	-.160							-.020	-.010	-.159	-.207	-.110					7
8	.065	-.120	-.148								-.024	-.154	-.157							8
9	-.088	-.125	-.151								-.167	-.149	-.167							9
10	-.047	-.134									-.105	-.146								10
11	-.102										-.132									11
								$\alpha = -03^\circ$			$\delta = 15^\circ$									
1	.355	.328	.235	.247		.175	.129											-.033		1
2	.125	.129	.136	.156	-.040	-.188	-.239				-.017		-.124		.228	.222	.244			2
3	.073	.075		.031	-.020		-.329				-.011	-.032	-.048		.104	.141	-.076			3
4	.079	.054	.059	-.078	-.092	-.084	-.319				-.008		-.069	-.102	-.037	.112				4
5	.063	.061	.052	-.137	-.047	-.214					-.040	.028	-.024	-.283	.016	-.088				5
6	.061	.114	.005	-.153	-.262						.033	.696	.016	-.259	-.101					6
7	.075	.070	-.158	-.174							-.018	-.008	-.143	-.222	-.055					7
8	.061	-.119	-.165								-.018	-.142	-.137							8
9	-.077	-.127	-.160								-.168	-.133	-.155							9
10	-.047	-.139									-.103	-.134								10
11	-.102										-.116									11

Table 8 Continued

Pressure Coefficients on Delta Wing with Control

Configuration E M = 1.61 R = 4.2×10^6

Orif	Upper Surface at Station 1	2	3	4	5	6	7	8	9		Lower Surface at Station 1	2	3	4	5	6	7	8	9	Orif
							$\alpha = -03^\circ$				$\delta = 20^\circ$									
1	.353	.323	.229	.240		.072	.017				-.018		-.123		.393	.336	.373	.097		1
2	.122	.131	.137	.154	-.239	-.269	-.299				-.008	-.027	-.048		.240	.264	.019			2
3	.071	.079		.063	-.084		-.371				-.007		-.067	-.166	.036	.222				3
4	.080	.056	.053	-.145	-.155	-.231	-.369				-.041	.028	-.028	-.325	.071	-.003				4
5	.066	.065	.069	-.163	-.067	-.231					.033	.666	.040	-.253	-.034					5
6	.060	.117	-.004	-.168	-.314						-.021	-.004	-.124	-.228	.017					6
7	.079	.081	-.180	-.168							-.020	-.131	-.122							7
8	.064	-.120	-.174								-.167	-.115	-.144							8
9	-.075	-.134	-.187								-.103	-.117								9
10	-.039	-.147									-.100									10
11	-.100																			11
							$\alpha = -03^\circ$				$\delta = 25^\circ$									
1	.365	.328	.223	.234		-.037	-.089											.238		1
2	.127	.128	.139	.157	-.335	-.330	-.349				-.020		-.122		.552	.459	.483			2
3	.077	.078		.219	-.117		-.412				-.013	-.024	-.047		.398	.368	.117			3
4	.087	.052	.052	-.204	-.201	-.333	-.398				-.007		-.068	-.248	.129	.336				4
5	.068	.060	.109	-.204	-.154	-.306					-.041	.031	-.030	-.309	.136	.095				5
6	.061	.106	-.019	-.197	-.362						.033	.639	.070	-.325	.041					6
7	.079	.093	-.191	-.175							-.021	-.003	-.108	-.296	.103					7
8	.060	-.123	-.199								-.027	-.109	-.121							8
9	-.065	-.136	-.202								-.169	-.099	-.139							9
10	-.031	-.156									-.092	-.101								10
11	-.081										-.074									11
							$\alpha = -03^\circ$				$\delta = 30^\circ$									
1	.359	.323	.224	.245		-.131	-.175											.392		1
2	.132	.129	.145	.157	-.376	-.368	-.384				-.017		-.128		.715	.551	.587			2
3	.070	.075		.418	-.158		-.432				-.003	-.048	-.046		.489	.489	.213			3
4	.077	.057	.056	-.279	-.238	-.382	-.415				-.001		-.066	-.292	.250	.445				4
5	.069	.061	.167	-.241	-.220	-.362					-.039	.033	-.028	-.289	.218	.197				5
6	.058	.110	-.040	-.198	-.389						.038	.613	.101	-.321	.126					6
7	.078	.111	-.211	-.168							-.017	.012	-.089	-.338	.196					7
8	.067	-.111	-.231								-.027	-.089	-.115							8
9	-.061	-.142	-.233								-.157	-.076	-.155							9
10	-.017	-.161									-.069	-.074								10
11	-.065										-.038									11
							$\alpha = -06^\circ$				$\delta = -03^\circ$									
1	.293	.349	.183	.164		.008	-.051											-.278		1
2	.195	.204	.219	.237	.298	.285	.307				-.074		-.299		-.286	-.244	-.269			2
3	.126	.150		.156	.274		-.105				-.054	-.091	-.120		-.260	-.289	-.310			3
4	.129	.110	.118	.146	.180	.175	-.084				-.051		-.107	-.153	-.164	-.266				4
5	.120	.111	.118	-.040	.151	-.051					-.084	-.084	-.122	-.249	-.120	-.259				5
6	.107	.158	.131	-.042	-.057						-.062	.867	-.090	-.233	-.201					6
7	.134	.125	-.045	-.058							-.055	-.072	-.223	-.230	1.701					7
8	.114	-.056	-.049								-.062	-.203	-.218							8
9	-.048	-.050	-.050								-.199	-.204	-.211							9
10	-.012	-.049									-.142	-.208								10
11	-.064										-.190									11
							$\alpha = -06^\circ$				$\delta = 00^\circ$									
1	.306	.363	.196	.171		.102	.071											-.325		1
2	.196	.206	.224	.231	.225	.229	.245				-.066		-.284		-.280	-.263	-.282			2
3	.122	.151		.127	.182		-.124				-.045	-.083	-.110		-.251	-.268	-.338			3
4	.124	.111	.120	.108	.133	.134	-.108				-.040		-.101	-.140	-.137	-.237				4
5	.115	.115	.120	-.044	.110	-.084					-.075	-.072	-.100	-.226	-.112	-.257				5
6	.099	.164	.115	-.063	-.073						-.056	1.095	-.074	-.229	-.218					6
7	.125	.128	-.056	-.071							-.050	-.053	-.211	-.226	1.719					7
8	.114	-.066	-.069								-.054	-.191	-.204							8
9	-.046	-.061	-.073								-.192	-.190	-.203							9
10	-.007	-.056									-.131	-.195								10
11	-.072										-.173									11

Table 8 Continued

Pressure Coefficients on Delta Wing with Control

Configuration E M = 1.61 R = 4.2×10^6

Orif	Upper Surface at Station 1	2	3	4	5	6	7	8	9	Lower Surface at Station 1	2	3	4	5	6	7	8	9	Orif
								$\alpha = -06^\circ$		$\delta = 05^\circ$									
1	.300	.340	.177	.164		.185	.164										-.338		1
2	.191	.188	.213	.217	.163	.151	.149			-.069		-.290		-.166	-.206	-.208			2
3	.124	.141		.060	.118		-.159			-.052	-.092	-.119		-.262	-.227	-.351			3
4	.115	.093	.108	.038	.076	.083	-.152			-.048		-.110	-.128	-.154	-.194				4
5	.112	.103	.106	-.091	.060	-.128				-.080	-.081	-.090	-.238	-.092	-.245				5
6	.099	.151	.068	-.106	-.135					-.063	1.056	-.066	-.224	-.216					6
7	.120	.114	-.100	-.114						-.052	-.047	-.211	-.211	1.714					7
8	.106	-.087	-.106							-.058	-.196	-.192							8
9	-.045	-.089	-.102							-.197	-.186	-.207							9
10	-.018	-.092								-.126	-.195								10
11	-.074									-.169									11
								$\alpha = -06^\circ$		$\delta = 10^\circ$									
1	.294	.345	.183	.169		.268	.254										-.274		1
2	.187	.191	.214	.217	.108	.064	.040			-.063		-.283		.059	-.067	-.051			2
3	.115	.147		.094	.076		-.202			-.042	-.082	-.110		-.210	-.122	-.276			3
4	.120	.101	.110	-.007	.028	.032	-.180			-.040		-.106	-.160	-.197	-.104				4
5	.110	.106	.099	-.072	-.018	-.162				-.076	-.076	-.060	-.258	-.080	-.210				5
6	.094	.154	.061	-.121	-.184					-.054	1.031	-.060	-.237	-.205					6
7	.116	.114	-.113	-.132						-.049	-.033	-.193	-.226	1.716					7
8	.106	-.077	-.120							-.056	-.179	-.178							8
9	-.043	-.088	-.126							-.192	-.180	-.196							9
10	-.028	-.095								-.121	-.176								10
11	-.076									-.144									11
								$\alpha = -06^\circ$		$\delta = 15^\circ$									
1	.296	.324	.183	.150		.202	.195										-.139		1
2	.191	.196	.221	.224	.076	-.068	-.185			-.082		-.293		.232	.098	.123			2
3	.111	.146		.111	.029		-.274			-.048	-.068	-.087		-.014	-.004	-.169			3
4	.120	.106	.110	-.058	-.063	-.032	-.264			-.040		-.103	-.132	-.234	.033				4
5	.106	.113	.102	-.097	-.110	-.206				-.074	.004	-.056	-.315	-.081	-.150				5
6	.099	.159	.055	-.124	-.257					-.002	.489	-.048	-.236	-.157					6
7	.117	.120	-.119	-.140						-.052	-.028	-.180	-.243	-.142					7
8	.107	-.081	-.133							-.052	-.167	-.170							8
9	-.037	-.095	-.142							-.191	-.170	-.185							9
10	-.022	-.097								-.112	-.167								10
11	-.075									-.133									11
								$\alpha = -06^\circ$		$\delta = 20^\circ$									
1	.296	.353	.183	.157		.118	.120										-.046		1
2	.192	.200	.215	.228	-.062	-.164	-.177			-.068		-.291		.383	.175	.215			2
3	.122	.150		.118	-.036		-.298			-.049	-.089	-.155		.161	.066	-.098			3
4	.122	.106	.107	-.114	-.108	-.079	-.290			-.042		-.108	-.129	-.203	.118				4
5	.114	.111	.121	-.141	-.137	-.199				-.076	-.077	-.045	-.318	-.070	-.110				5
6	.102	.159	.041	-.153	-.278					-.057	.991	-.036	-.237	-.129					6
7	.122	.125	-.136	-.147						-.053	-.025	-.170	-.279	1.710					7
8	.109	-.088	-.149							-.054	-.156	-.164							8
9	-.032	-.093	-.163							-.195	-.159	-.178							9
10	-.022	-.109								-.114	-.159								10
11	-.059									-.111									11
								$\alpha = -06^\circ$		$\delta = 25^\circ$									
1	.300	.356	.188	.173		-.001	.004										.127		1
2	.205	.206	.235	.243	-.253	-.272	-.274			-.070		-.296		.555	.308	.363			2
3	.133	.156		.233	-.087		-.360			-.051	-.088	-.116		.279	.186	.025			3
4	.136	.116	.124	-.160	-.177	-.242	-.350			-.047		-.108	-.174	-.185	.249				4
5	.129	.122	.165	-.177	-.162	-.247				-.082	-.079	-.054	-.311	-.008	-.007				5
6	.115	.170	.041	-.175	-.333					-.059	.953	-.015	-.352	-.057					6
7	.133	.142	-.147	-.168						-.055	-.028	-.160	-.290	1.708					7
8	.123	-.081	-.157							-.057	-.143	-.158							8
9	-.012	-.090	-.156							-.193	-.149	-.170							9
10	-.006	-.101								-.104	-.145								10
11	-.042									-.090									11

Table 8 Continued

Pressure Coefficients on Delta Wing with Control

Configuration E M = 1.61 R = 4.2×10^6

Orif	Upper Surface at Station 1	2	3	4	5	6	7	8	9		Lower Surface at Station 1	2	3	4	5	6	7	8	9	Orif
							$\alpha = -06^\circ$				$\delta = 30^\circ$									
1	.286	.352	.178	.159		-.090	-.079											.260		1
2	.197	.206	.219	.233	-.320	-.326	-.325				-.071		-.296		.716	.408	.499			2
3	.129	.149		.359	-.119		-.395				-.048	-.089	-.117		.415	.291	.118			3
4	.135	.109	.115	-.246	-.211	-.311	-.379				-.044		-.108	-.220	-.087	.358				4
5	.125	.108	.210	-.231	-.193	-.307					-.079	-.080	-.068	-.316	.073	.095				5
6	.111	.160	.019	-.191	-.360						-.059	.925	.013	-.366	.023					6
7	.125	.155	-.165	-.169							-.054	-.023	-.140	-.353	1.701					7
8	.117	-.084	-.188								-.059	-.126	-.149							8
9	-.014	-.115	-.183								-.192	-.133	-.186							9
10	.003	-.125									-.092	-.131								10
11	-.038										-.067									11
							$\alpha = -09^\circ$				$\delta = -30^\circ$									
1	.229	.333	.095	.002		-.394	-.377											-.329		1
2	.279	.296	.306	.319	1.082	1.016	.815				-.175		-.395		-.455	-.444	-.395			2
3	.196	.212		.429	.948		.725				-.089	-.127	-.197		-.448	-.446	-.366			3
4	.206	.172	.190	.207	1.124	.783	.616				-.090		.036	-.214	-.448	-.424				4
5	.186	.185	.205	-.165	.874	.648					-.111	-.059	-.142	-.159	-.363	-.388				5
6	.188	.235	.400	-.182	.585						-.092	.035	-.217	-.131	-.449					6
7	.200	.311	.138	-.197							-.048	-.077	-.301	-.123	-.436					7
8	.177	.133	.048								.044	-.237	-.213							8
9	.002	.127	.004								-.088	-.254	-.199							9
10	.148	.101									-.091	-.140								10
11	.173										-.119									11
							$\alpha = -09^\circ$				$\delta = -25^\circ$									
1	.211	.319	.084	-.014		-.366	-.361											-.344		1
2	.260	.278	.306	.300	.929	.890	.716				-.176		-.403		-.454	-.457	-.405			2
3	.190	.206		.426	.831		.491				-.082	-.131	-.155		-.455	-.460	-.375			3
4	.199	.159	.178	.245	.950	.700	.523				-.094		.003	-.046	-.448	-.434				4
5	.168	.169	.150	-.130	.751	.507					-.121	-.090	-.205	-.200	-.326	-.387				5
6	.174	.212	.373	-.172	.434						-.094	.001	-.203	-.167	-.438					6
7	.181	.222	.127	-.180							-.070	-.086	-.331	-.116	-.432					7
8	.157	.087	.053								-.007	-.232	-.280							8
9	-.024	.103	.018								-.118	-.253	-.239							9
10	.087	.089									-.098	-.265								10
11	.081										-.125									11
							$\alpha = -09^\circ$				$\delta = -20^\circ$									
1	.219	.323	.087	-.007		-.341	-.362											-.358		1
2	.274	.280	.305	.306	.816	.772	.659				-.182		-.401		-.451	-.457	-.432			2
3	.193	.204		.399	.759		.327				-.096	-.136	-.172		-.462	-.472	-.402			3
4	.194	.166	.189	.275	.746	.636	.410				-.096		-.035	.007	-.450	-.451				4
5	.175	.173	.146	-.062	.617	.362					-.122	-.101	-.123	-.220	-.292	-.409				5
6	.181	.217	.337	-.149	.335						-.097	-.005	-.208	-.192	-.428					6
7	.192	.190	.127	-.180							-.096	-.080	-.304	-.156	-.428					7
8	.164	.056	.072								-.036	-.225	-.261							8
9	-.013	.078	.042								-.129	-.268	-.149							9
10	.038	.083									-.101	-.275								10
11	.034										-.127									11
							$\alpha = -09^\circ$				$\delta = -15^\circ$									
1	.214	.315	.069	-.012		-.290	-.344											-.371		1
2	.263	.276	.292	.300	.684	.653	.603				-.180		-.407		-.447	-.453	-.446			2
3	.190	.203		.369	.723		.193				-.090	-.131	-.174		-.448	-.465	-.420			3
4	.194	.163	.172	.282	.553	.540	.258				-.096		-.057	-.111	-.434	-.456				4
5	.167	.168	.144	-.016	.467	.252					-.118	-.103	-.103	-.241	-.270	-.424				5
6	.175	.210	.288	-.112	.252						-.098	-.033	-.229	-.285	-.402					6
7	.181	.166	.079	-.134							-.104	-.069	-.308	-.213	-.407					7
8	.156	.024	.053								-.084	-.229	-.253							8
9	-.018	.037	.028								-.180	-.276	-.229							9
10	.016	.053									-.115	-.286								10
11	-.003										-.132									11

Table 8 Continued

Pressure Coefficients on Delta Wing with Control

Configuration E M = 1.61 R = 4.2×10^6

Orif	Upper Surface at Station 1	2	3	4	5	6	7	8	9		Lower Surface at Station 1	2	3	4	5	6	7	8	9	Orif
								$\alpha = -09^\circ$			$\delta = -10^\circ$									
1	.230	.332	.091	.007		-.220	-.285											-.378		1
2	.282	.293	.311	.330	.695	.542	.528				-.176		-.400		-.428	-.434	-.437			2
3	.191	.213		.341	.607		.102				-.085	-.126	-.165		-.424	-.443	-.419			3
4	.205	.179	.194	.304	.394	.433	.154				-.088		-.079	-.156	-.399	-.441				4
5	.187	.184	.166	.032	.360	.157					-.111	-.098	-.143	-.251	-.255	-.389				5
6	.184	.229	.259	-.035	.170						-.090	-.066	-.176	-.263	-.331					6
7	.192	.176	.057	-.090							-.090	-.003	-.254	-.232	-.343					7
8	.170	.018	.057								-.088	-.232	-.253							8
9	-.009	.025	.039								-.186	-.264	-.229							9
10	.024	.033									-.127	-.251								10
11	-.010										-.159									11
								$\alpha = -09^\circ$			$\delta = -05^\circ$									
1	.221	.328	.084	.011		-.127	-.189											-.417		1
2	.269	.291	.312	.328	.515	.423	.429				-.178		-.401		-.410	-.417	-.436			2
3	.198	.215		.275	.428		.005				-.087	-.131	-.175		-.393	-.424	-.431			3
4	.203	.178	.190	.257	.335	.319	.042				-.092		-.130	-.213	-.362	-.421				4
5	.181	.182	.194	.046	.294	.056					-.113	-.104	-.169	-.282	-.265	-.413				5
6	.185	.231	.224	.037	.054						-.095	-.105	-.137	-.270	-.307					6
7	.191	.185	.013	-.037							-.101	-.109	-.248	-.247	-.246					7
8	.171	-.007	.019								-.096	-.233	-.248							8
9	-.012	.004	.010								-.212	-.237	-.230							9
10	.025	.006									-.154	-.239								10
11	-.020										-.187									11
								$\alpha = -09^\circ$			$\delta = 00^\circ$									
1	.217	.319	.075	-.012		-.047	-.093											-.424		1
2	.256	.279	.298	.309	.327	.323	.333				-.184		-.413		-.397	-.414	-.425			2
3	.186	.203		.205	.265		-.066				-.100	-.143	-.179		-.367	-.410	-.426			3
4	.192	.166	.178	.177	.218	.226	-.036				-.102		-.151	-.299	-.347	-.393				4
5	.166	.175	.183	.002	.193	-.023					-.128	-.114	-.168	-.325	-.266	-.401				5
6	.174	.221	.173	-.017	-.019						-.108	-.116	-.130	-.302	-.291					6
7	.182	.178	-.025	-.016							-.106	-.110	-.263	-.274	-.266					7
8	.158	-.023	-.025								-.106	-.232	-.250							8
9	-.017	-.024	-.031								-.229	-.235	-.243							9
10	.024	-.020									-.162	-.245								10
11	-.029										-.190									11
								$\alpha = -09^\circ$			$\delta = 03^\circ$									
1	.235	.339	.100	.013		.044	.023											-.361		1
2	.279	.296	.316	.330	.283	.259	.281				-.181		-.400		-.283	-.338	-.355			2
3	.207	.219		.171	.208		-.088				-.089	-.137	-.163		-.323	-.330	-.360			3
4	.207	.187	.203	.152	.154	.184	-.066				-.093		-.143	-.294	-.310	-.321				4
5	.190	.191	.198	-.012	.146	-.065					-.122	-.112	-.139	-.329	-.215	-.359				5
6	.189	.246	.168	-.037	-.064						-.097	-.104	-.122	-.286	-.282					6
7	.202	.196	-.019	-.049							-.097	-.094	-.244	-.211	-.268					7
8	.187	-.019	-.026								-.100	-.221	-.234							8
9	.013	-.020	-.029								-.214	-.221	-.226							9
10	.046	-.017									-.149	-.226								10
11	-.008										-.177									11
								$\alpha = -12^\circ$			$\delta = -30^\circ$									
1	.156	.247	.002	-.112		-.424	-.393											-.380		1
2	.343	.350	.377	.380	1.117	1.077	.867				-.281		-.444		-.474	-.468	-.416			2
3	.248	.261		.495	1.018		.784				-.121	-.191	-.273		-.444	-.461	-.401			3
4	.247	.230	.247	.288	1.157	.849	.654				-.119		-.088	-.387	-.463	-.451				4
5	.232	.232	.310	-.108	.951	.712					-.151	-.130	-.183	-.244	-.429	-.427				5
6	.230	.284	.455	-.146	.671						-.125	-.021	-.273	-.113	-.412					6
7	.242	.384	.168	-.165							-.068	-.105	-.340	-.116	-.410					7
8	.223	.172	.100								.021	-.266	-.273							8
9	.061	.165	.075								-.126	-.275	-.144							9
10	.225	.144									-.115	-.145								10
11	.263										-.157									11

Table 8 Continued

Pressure Coefficients on Delta Wing with Control

Configuration E M = 1.61 R = 4.2×10^6

Orif	Upper Surface at Station 1	2	3	4	5	6	7	8	9		Lower Surface at Station 1	2	3	4	5	6	7	8	9	Orif
							$\alpha = -12^\circ$				$\delta = -25^\circ$									
1	.151	.242	-.005	-.124		-.411	-.392											-.377		1
2	.336	.347	.375	.373	.979	.941	.733				-.282		-.445		-.468	-.472	-.411			2
3	.248	.256		.489	.896		.645				-.126	-.198	-.305		-.445	-.461	-.396			3
4	.243	.232	.248	.336	.991	.733	.573				-.122		-.046	-.388	-.468	-.442				4
5	.235	.234	.232	-.088	.801	.588					-.153	-.122	-.195	-.259	-.434	-.423				5
6	.226	.284	.441	-.122	.539						-.130	-.077	-.240	-.168	-.411					6
7	.236	.313	.185	-.145							-.103	-.145	-.381	-.153	-.407					7
8	.218	.148	.114								-.024	-.278	-.316							8
9	.020	.159	.066								-.145	-.290	-.130							9
10	.158	.145									-.134	-.290								10
11	.198										-.149									11
							$\alpha = -12^\circ$				$\delta = -20^\circ$									
1	.160	.257	.002	-.120		-.385	-.373											-.372		1
2	.340	.352	.381	.381	.864	.831	.677				-.289		-.447		-.457	-.470	-.402			2
3	.250	.261		.493	.827		.419				-.123	-.201	-.305		-.441	-.460	-.385			3
4	.252	.240	.249	.374	.785	.670	.485				-.127		-.088	-.341	-.466	-.430				4
5	.241	.244	.214	-.019	.699	.453					-.161	-.150	-.092	-.269	-.423	-.412				5
6	.234	.284	.415	-.119	.419						-.131	-.092	-.263	-.201	-.411					6
7	.247	.269	.170	-.142							-.132	-.127	-.356	-.205	-.400					7
8	.229	.241	.122								-.077	-.277	-.292							8
9	.016	.129	.091								-.172	-.297	-.131							9
10	.106	.147									-.127	-.305								10
11	.133										-.140									11
							$\alpha = -12^\circ$				$\delta = -15^\circ$									
1	.157	.243	.003	-.109		-.344	-.357											-.356		1
2	.338	.350	.388	.379	.809	.721	.632				-.281		-.448		-.450	-.466	-.399			2
3	.246	.266		.447	.766		.277				-.116	-.182	-.372		-.442	-.456	-.366			3
4	.254	.243	.256	.390	.604	.608	.373				-.113		-.140	-.353	-.455	-.427				4
5	.244	.239	.228	.037	.555	.330					-.156	-.142	-.147	-.322	-.403	-.401				5
6	.242	.286	.371	-.070	.328						-.115	-.091	-.261	-.240	-.400					6
7	.247	.244	.153	-.102							-.133	-.113	-.328	-.222	-.391					7
8	.233	.091	.114								-.091	-.267	-.270							8
9	.028	.111	.107								-.184	-.288	-.213							9
10	.077	.122									-.127	-.312								10
11	.077										-.143									11
							$\alpha = -12^\circ$				$\delta = -10^\circ$									
1	.157	.243	-.002	-.118		-.302	-.335											-.352		1
2	.328	.343	.378	.368	.739	.594	.562				-.277		-.454		-.450	-.469	-.403			2
3	.239	.260		.411	.669		.155				-.123	-.196	-.382		-.445	-.468	-.374			3
4	.250	.229	.243	.371	.454	.505	.216				-.119		-.179	-.325	-.448	-.433				4
5	.236	.232	.225	.100	.463	.216					-.148	-.141	-.198	-.319	-.382	-.391				5
6	.231	.284	.314	.000	.222						-.126	-.114	-.227	-.270	-.414					6
7	.253	.237	.100	-.052							-.142	-.116	-.303	-.198	-.380					7
8	.227	.062	.096								-.116	-.276	-.308							8
9	.034	.073	.088								-.216	-.293	-.253							9
10	.068	.080									-.143	-.308								10
11	.054										-.170									11
							$\alpha = -12^\circ$				$\delta = -05^\circ$									
1	.156	.245	-.002	-.118		-.222	-.288											-.379		1
2	.332	.358	.380	.384	.604	.478	.484				-.274		-.453		-.436	-.464	-.434			2
3	.245	.262		.339	.498		.060				-.121	-.191	-.379		-.434	-.462	-.403			3
4	.252	.238	.244	.318	.428	.394	.107				-.122		-.191	-.319	-.427	-.450				4
5	.243	.238	.247	.094	.377	.113					-.159	-.140	-.203	-.335	-.351	-.402				5
6	.234	.286	.275	.095	.114						-.122	-.165	-.174	-.323	-.383					6
7	.245	.235	.065	-.013							-.137	-.144	-.284	-.303	-.337					7
8	.225	.037	.062								-.127	-.267	-.290							8
9	.031	.053	.065								-.236	-.254	-.273							9
10	.073	.056									-.167	-.257								10
11	.033										-.197									11

Table 8 Continued

Pressure Coefficients on Delta Wing with Control

Configuration E M = 1.61 R = 4.2×10^6

Orif	Upper Surface at Station 1	2	3	4	5	6	7	8	9		Lower Surface at Station 1	2	3	4	5	6	7	8	9	Orif
							$\alpha = -12^\circ$				$\delta = 00^\circ$									
1	.163	.252	.004	-.113		-.145	-.203											-.415		1
2	.337	.351	.378	.384	.396	.389	.402				-.274		-.449		-.420	-.450	-.449			2
3	.248	.259		.274	.341		-.011				-.119	-.191	-.371		-.415	-.451	-.427			3
4	.256	.243	.247	.254	.295	.297	.033				-.113		-.214	-.324	-.401	-.432				4
5	.235	.237	.262	.057	.269	.036					-.147	-.143	-.183	-.354	-.321	-.417				5
6	.234	.288	.239	.055	.037						-.119	-.163	-.145	-.361	-.341					6
7	.245	.242	.033	.049							-.131	-.129	-.271	-.311	-.300					7
8	.224	.025	.037								-.127	-.263	-.270							8
9	.038	.032	.038								-.246	-.245	-.258							9
10	.074	.037									-.156	-.244								10
11	.022										-.184									11
							$\alpha = -12^\circ$				$\delta = 03^\circ$									
1	.158	.256	.011	-.111		-.104	-.176											-.396		1
2	.338	.359	.381	.388	.348	.347	.346				-.277		-.444		-.397	-.457	-.434			2
3	.253	.267		.238	.285		-.031				-.123	-.193	-.378		-.407	-.447	-.414			3
4	.248	.243	.265	.201	.245	.254	.003				-.118		-.212	-.313	-.407	-.421				4
5	.236	.243	.254	.036	.213	-.002					-.154	-.140	-.152	-.348	-.302	-.424				5
6	.236	.302	.224	.018	.005						-.122	-.158	-.156	-.320	-.354					6
7	.246	.243	.019	.018							-.133	-.111	-.272	-.253	-.329					7
8	.246	.018	.010								-.119	-.251	-.264							8
9	.054	.023	.019								-.237	-.245	-.254							9
10	.078	.025									-.150	-.252								10
11	.033										-.177									11
							$\alpha = -15^\circ$				$\delta = -30^\circ$									
1	.082	.184	-.097	-.177		-.445	-.376											-.369		1
2	.408	.414	.436	.436	1.171	1.138	.936				-.366		-.321		-.444	-.456	-.420			2
3	.327	.336		.646	1.078		.872				-.160	-.373	-.273		-.448	-.447	-.401			3
4	.323	.309	.352	.467	1.206	.972	.710				-.159		-.237	-.420	-.460	-.436				4
5	.308	.340	.551	-.050	1.048	.806					-.180	-.072	-.252	-.392	-.447	-.426				5
6	.327	.399	.566	-.094	.798						-.127	-.073	-.349	-.337	-.444					6
7	.350	.520	.248	-.113							-.053	-.129	-.325	-.261	-.424					7
8	.359	.239	.186								-.058	-.279	-.269							8
9	.293	.261	.171								-.195	-.290	-.214							9
10	.346	.319									-.163	-.094								10
11	.352										-.216									11
							$\alpha = -15^\circ$				$\delta = -25^\circ$									
1	.062	.166	-.114	-.196			-.375											-.371		1
2	.398	.411	.422	.410	1.063	1.039	.831				-.369		-.379		-.442	-.457	-.421			2
3	.314	.318		.623	.991		.755				-.155	-.343	-.301		-.447	-.448	-.401			3
4	.309	.295	.338	.489	1.031	.823	.633				-.157		-.303	-.421	-.457	-.437				4
5	.282	.323	.435	-.019	.872	.698					-.177	-.104	-.280	-.414	-.447	-.421				5
6	.310	.382	.540	-.073	.684						-.154	-.123	-.320	-.387	-.441					6
7	.344	.480	.237	-.103							-.127	-.140	-.352	-.301	-.419					7
8	.323	.216	.172								-.057	-.299	-.261							8
9	.163	.215	.137								-.186	-.311	-.174							9
10	.297	.216									-.146	-.130								10
11	.304										-.194									11
							$\alpha = -15^\circ$				$\delta = -20^\circ$									
1	.073	.184	-.096	-.183		-.428	-.385											-.363		1
2	.404	.427	.439	.448	.972	.931	.704				-.376		-.432		-.438	-.457	-.407			2
3	.328	.336		.635	.904		.622				-.167	-.341	-.400		-.445	-.446	-.391			3
4	.319	.313	.357	.531	.841	.718	.555				-.169		-.165	-.428	-.455	-.433				4
5	.303	.339	.395	.053	.761	.576					-.190	-.097	-.189	-.392	-.433	-.413				5
6	.319	.404	.542	-.074	.527						-.161	-.090	-.325	-.366	-.410					6
7	.358	.460	.240	-.095							-.151	-.136	-.391	-.320	-.405					7
8	.326	.204	.196								-.084	-.301	-.316							8
9	.126	.216	.172								-.186	-.326	-.155							9
10	.248	.207									-.141	-.254								10
11	.285										-.179									11

[redacted]

Table 8 Concluded

Pressure Coefficients on Delta Wing with Control

Configuration E M = 1.61 R = 4.2×10^6

Orif	Upper Surface at Station 1	2	3	4	5	6	7	8	9	Lower Surface at Station 1	2	3	4	5	6	7	8	9	Orif
								$\alpha = -15^\circ$		$\delta = -15^\circ$									
1	.074	.190	-.095	-.184		-.392	-.375										-.345		1
2	.407	.425	.434	.440	.889	.810	.660			-.361		-.420		-.428	-.450	-.400			2
3	.325	.333		.573	.842		.433			-.147	-.339	-.406		-.438	-.437	-.378			3
4	.319	.311	.356	.533	.651	.666	.479			-.155		-.222	-.411	-.438	-.419				4
5	.307	.337	.374	.185	.675	.441				-.174	-.096	-.211	-.371	-.414	-.394				5
6	.323	.408	.500	-.018	.411					-.154	-.067	-.366	-.343	-.390					6
7	.359	.407	.218	-.054						-.161	-.142	-.408	-.338	-.381					7
8	.325	.178	.176							-.106	-.285	-.333							8
9	.101	.180	.178							-.196	-.310	-.263							9
10	.194	.180								-.152	-.252								10
11	.223									-.167									11
								$\alpha = -15^\circ$		$\delta = -10^\circ$									
1	.074	.184	-.096	-.185		-.362	-.373										-.349		1
2	.399	.419	.434	.434	.800	.688	.605			-.362		-.438		-.436	-.460	-.407			2
3	.317	.323		.532	.750		.258			-.152	-.335	-.419		-.445	-.441	-.379			3
4	.313	.316	.353	.522	.549	.594	.358			-.156		-.378	-.363	-.431	-.421				4
5	.303	.336	.377	.215	.587	.306				-.176	-.098	-.400	-.390	-.400	-.394				5
6	.318	.399	.444	.066	.315					-.152	-.121	-.390	-.309	-.381					6
7	.358	.378	.182	-.007						-.159	-.143	-.366	-.321	-.365					7
8	.322	.144	.165							-.144	-.292	-.327							8
9	.108	.151	.172							-.238	-.313	-.316							9
10	.169	.156								-.172	-.205								10
11	.158									-.189									11
								$\alpha = -15^\circ$		$\delta = -05^\circ$									
1	.075	.176	-.099	-.183		-.324	-.364										-.358		1
2	.408	.420	.432	.435	.715	.582	.542			-.366		-.438		-.442	-.467	-.426			2
3	.323	.332		.448	.634		.154			-.150	-.335	-.407		-.447	-.453	-.385			3
4	.316	.308	.353	.439	.566	.493	.218			-.156		-.390	-.354	-.417	-.428				4
5	.301	.338	.390	.178	.500	.202				-.176	-.100	-.399	-.394	-.379	-.405				5
6	.327	.402	.397	.190	.196					-.152	-.155	-.362	-.385	-.375					6
7	.364	.357	.145	.086						-.160	-.147	-.352	-.294	-.328					7
8	.325	.123	.150							-.149	-.271	-.302							8
9	.109	.129	.144							-.265	-.276	-.295							9
10	.149	.133								-.185	-.250								10
11	.121									-.193									11
								$\alpha = -15^\circ$		$\delta = 00^\circ$									
1	.064	.172	-.108	-.194		-.249	-.313										-.408		1
2	.391	.410	.424	.424	.459	.473	.473			-.365		-.439		-.433	-.467	-.450			2
3	.310	.319		.364	.432		.065			-.154	-.334	-.406		-.425	-.468	-.431			3
4	.311	.306	.352	.348	.389	.393	.110			-.154		-.389	-.339	-.394	-.459				4
5	.294	.326	.382	.137	.377	.106				-.179	-.102	-.376	-.361	-.324	-.433				5
6	.318	.396	.345	.122	.110					-.156	-.154	-.358	-.353	-.370					6
7	.349	.339	.097	.119						-.169	-.132	-.367	-.269	-.301					7
8	.328	.089	.097							-.156	-.251	-.305							8
9	.099	.095	.096							-.271	-.259	-.294							9
10	.139	.096								-.182	-.258								10
11	.089									-.186									11
								$\alpha = -15^\circ$		$\delta = 03^\circ$									
1	.075	.178	-.097	-.185		-.360	-.302										-.409		1
2	.399	.422	.428	.435	.371	.424	.427			-.366		-.441		-.417	-.472	-.443			2
3	.331	.330		.316	.336		.028			-.151	-.337	-.408		-.401	-.470	-.421			3
4	.322	.306	.392	.296	.297	.347	.068			-.155		-.392	-.330	-.405	-.450				4
5	.310	.337	.381	.112	.053	.060				-.176	-.105	-.382	-.339	-.340	-.425				5
6	.328	.422	.319	.084	1.765					-.157	-.157	-.347	-.272	-.373					6
7	.359	.342	.083	.074						-.167	-.138	-.367	1.777	-.311					7
8	.345	.090	.079							-.158	-.253	-.307							8
9	.109	.093	.074							-.272	-.248	-.290							9
10	.140	.092								-.185	-.258								10
11	.085									-.182									11

Table 9

Pressure Coefficients on Delta Wing with Control

Configuration E M = 1.61 R = 7.6×10^6

Orif	Upper Surface at Station 1	2	3	4	5	6	7	8	9	Lower Surface at Station 1	2	3	4	5	6	7	8	9	Orif
								$\alpha = 00^\circ$		$\delta = -20^\circ$									
1	.382	.355	.273	.271		-.118	-.233										-.408		1
2	.048	.030	.017	.011	.413	.470	.476			.070		.051		-.375	-.354	-.393			2
3	.011	.021		.147	.370		.042			.031	.010	.001		-.127	-.385	-.428			3
4	.020	-.003	-.019	-.017	.280	.317	.070			.029		-.013	-.175	-.181	-.418				4
5	.006	.000	-.013	-.235	.185	.045				.002	.047	.018	-.200	-.041	-.299				5
6	.005	.040	.101	-.248	.024					.013	.020	-.071	-.197	-.340					6
7	.024	.006	-.077	-.211						.028	.035	-.227	-.186	-.315					7
8	-.001	-.096	-.087							.010	-.152	-.214							8
9	-.141	-.087	-.112							-.127	-.168	-.213							9
10	-.067	-.087								-.070	-.183								10
11	-.127									-.126									11
								$\alpha = 00^\circ$		$\delta = -10^\circ$									
1	.390	.363	.277	.270		.105	.019										-.389		1
2	.057	.040	.023	.016	.204	.247	.273			.071		.048		-.073	-.291	-.336			2
3	.018	.022		.072	.248		-.109			.032	.010	.001		-.059	-.135	-.378			3
4	.024	.002	-.015	.035	.080	.135	-.101			.029		-.014	-.070	-.089	-.124				4
5	.014	.002	.007	-.160	.058	-.105				.001	.049	-.018	-.163	-.054	-.224				5
6	.003	.047	.048	-.183	-.089					.015	.020	-.030	-.200	-.241					6
7	.026	.011	-.117	-.171						.030	.020	-.176	-.183	-.213					7
8	.004	-.124	-.112							.011	-.155	-.175							8
9	-.134	-.122	-.121							-.134	-.160	-.171							9
10	-.071	-.118								-.080	-.163								10
11	-.138									-.142									11
								$\alpha = 00^\circ$		$\delta = -04^\circ$									
1	.392	.361	.282	.284		.234	.163										-.387		1
2	.058	.038	.026	.024	.109	.141	.162			.076		.048		-.018	-.086	-.100			2
3	.018	.027		.031	.092		-.172			.033	.013	.001		-.017	-.072	-.279			3
4	.026	.004	-.010	.021	.036	.059	-.166			.034		-.013	-.042	-.050	-.065				4
5	.016	.004	.013	-.145	.020	-.157				.007	.059	-.022	-.173	-.045	-.207				5
6	.002	.049	.027	-.132	-.137					.021	.022	-.009	-.167	-.186					6
7	.025	.022	-.128	-.150						.029	.018	-.158	-.160	-.160					7
8	.010	-.132	-.127							.013	-.147	-.158							8
9	-.134	-.131	-.134							-.131	-.147	-.153							9
10	-.072	-.128								-.074	-.151								10
11	-.145									-.143									11
								$\alpha = 00^\circ$		$\delta = 00^\circ$									
1	.395	.362	.282	.285		.303	.262										-.285		1
2	.058	.037	.027	.026	.044	.045	.059			.079		.050		.030	.008	-.008			2
3	.020	.026		.018	.026		-.217			.037	.013	.004		.018	-.012	-.225			3
4	.027	.003	-.007	-.005	.003	.011	-.210			.037		-.011	-.016	-.015	-.017				4
5	.018	.004	.001	-.150	-.008	-.188				.007	.060	-.013	-.151	-.013	-.189				5
6	-.001	.048	.011	-.141	-.156					.022	.022	.007	-.147	-.155					6
7	.025	.020	-.142	-.143						.029	.021	-.144	-.144	-.137					7
8	.011	-.134	-.143							.013	-.137	-.143							8
9	-.130	-.140	-.147							-.134	-.136	-.143							9
10	-.069	-.141								-.072	-.138								10
11	-.144									-.139									11
								$\alpha = 00^\circ$		$\delta = 10^\circ$									
1	.398	.367	.282	.288		.212	.130										-.057		1
2	.065	.044	.029	.033	-.065	-.213	-.316			.080		.051		.231	.227	.244			2
3	.023	.031		-.058	-.038		-.371			.041	.015	.008		.305	.163	-.077			3
4	.029	.010	-.005	-.047	-.069	-.099	-.282			.041		-.011	.026	.076	.125				4
5	.021	.010	-.007	-.155	-.041	-.238				.009	.061	.001	-.148	.060	-.085				5
6	.008	.057	-.022	-.187	-.229					.025	.024	.056	-.177	-.070					6
7	.028	.023	-.170	-.177						.030	.024	-.105	-.162	-.069					7
8	.015	-.147	-.174							.016	-.117	-.104							8
9	-.121	-.157	-.168							-.132	-.108	-.110							9
10	-.068	-.158								-.074	-.107								10
11	-.137									-.129									11

Table 9 Continued

Pressure Coefficients on Delta Wing with Control

Configuration E M = 1.61 R = 7.6×10^6

Orif	Upper Surface at Station 1	2	3	4	5	6	7	8	9		Lower Surface at Station 1	2	3	4	5	6	7	8	9	Orif
								α = 00°			δ = 20°									
1	.393	.360	.278	.282		.011	-.090											.172		1
2	.059	.037	.027	.026	-.269	-.321	-.364				.079		.049		.414	.454	.438			2
3	.021	.026		-.041	-.119		-.415				.036	.012	.005		.353	.357	.067			3
4	.024	.004	-.007	-.157	-.171	-.327	-.374				.038		-.014	-.030	.259	.299				4
5	.015	.002	.018	-.185	-.031	-.295					.008	.058	-.021	-.225	.167	.059				5
6	.001	.051	-.073	-.188	-.327						.025	.019	.110	-.271	.036					6
7	.022	.031	-.221	-.184							.028	.020	-.071	-.206	.059					7
8	.008	-.149	-.215								.008	-.093	-.075							8
9	-.121	-.173	-.216								-.134	-.077	-.098							9
10	-.063	-.186									-.077	-.075								10
11	-.127										-.105									11
								α = 00°			δ = 29°									
1	.395	.365	.280	.285		-.159	-.238											.435		1
2	.065	.040	.026	.027	-.341	-.381	-.410				.075		.044		.647	.644	.609			2
3	.024	.028		.399	-.193		-.450				.037	.011	.002		.646	.554	.245			3
4	.022	.005	-.010	-.324	-.243	-.398	-.400				.039		-.018	-.165	.539	.500				4
5	.015	.004	.102	-.290	-.208	-.397					.006	.056	-.029	-.258	.315	.240				5
6	.004	.054	-.099	-.199	-.377						.021	.020	.157	-.274	.173					6
7	.022	.063	-.265	-.188							.025	.030	-.036	-.264	.199					7
8	.012	-.149	-.267								.002	-.056	-.064							8
9	-.099	-.185	-.263								-.135	-.043	-.103							9
10	-.038	-.199									-.062	-.041								10
11	-.107										-.034									11
								α = 06°			δ = -04°									
1	.346	.115	.153	.018		.250	.228											-.164		1
2	-.069	-.268	-.328	-.360	-.135	-.140	-.176				.209		.233		.170	.143	.125			2
3	-.059	-.067		-.171	-.303		-.341				.147	.150	.151		.117	.091	-.148			3
4	-.049	-.086	-.111	-.148	-.162	-.183	-.330				.149		.116	.066	.068	.066				4
5	-.080	-.085	-.089	-.236	-.102	-.247					.123	.168	.103	-.080	.062	-.106				5
6	-.062	-.038	-.073	-.218	-.228						.117	.135	.095	-.099	-.121					6
7	-.044	-.049	-.201	-.197							.131	.125	-.078	-.098	-.131					7
8	-.063	-.189	-.203								.118	-.069	-.085							8
9	-.196	-.194	-.207								-.041	-.070	-.082							9
10	-.117	-.191									-.008	-.072								10
11	-.172										-.067									11
								α = 06°			δ = 00°									
1	.345	.110	.147	.025		.200	.155											-.106		1
2	-.068	-.267	-.331	-.360	-.248	-.279	-.288				.204		.235		.215	.209	.202			2
3	-.061	-.071		-.199	-.269		-.384				.144	.149	.151		.167	.150	-.103			3
4	-.051	-.087	-.111	-.139	-.166	-.197	-.367				.144		.114	.102	.114	.118				4
5	-.083	-.088	-.100	-.231	-.121	-.271					.122	.168	.102	-.067	.105	-.076				5
6	-.065	-.040	-.081	-.221	-.238						.117	.134	.114	-.064	-.068					6
7	-.049	-.060	-.210	-.222							.131	.119	-.062	-.060	-.054					7
8	-.066	-.194	-.209								.114	-.063	-.066							8
9	-.194	-.197	-.213								-.045	-.059	-.066							9
10	-.127	-.199									-.013	-.059								10
11	-.184										-.072									11
								α = 06°			δ = 10°									
1	.346	.110	.148	.025		.005	-.090											.111		1
2	-.069	-.268	-.333	-.361	-.372	-.424	-.422				.202		.231		.446	.402	.387			2
3	-.062	-.069		-.087	-.347		-.433				.141	.147	.148		.446	.329	.034			3
4	-.054	-.089	-.111	-.142	-.208	-.308	-.418				.141		.112	.175	.269	.278				4
5	-.084	-.088	-.112	-.238	-.134	-.403					.121	.164	.073	-.036	.233	.044				5
6	-.067	-.036	-.110	-.234	-.293						.114	.128	.172	-.083	.049					6
7	-.051	-.068	-.239	-.212							.124	.106	-.015	-.129	.053					7
8	-.063	-.217	-.234								.102	-.044	-.014							8
9	-.184	-.225	-.230								-.056	-.030	-.028							9
10	-.129	-.221									-.021	-.025								10
11	-.184										-.074									11

Table 9 Concluded

Pressure Coefficients on Delta Wing with Control

Configuration E M = 1.61 R = 7.6×10^6

Orif	Upper Surface at Station										Lower Surface at Station									Orif
	1	2	3	4	5	6	7	8	9		1	2	3	4	5	6	7	8	9	
	α = 06°										δ = 20°									
1	.341	.110	.145	.021		-.145	-.209											.346		1
2	-.075	-.269	-.335	-.358	-.396	-.441	-.431				.203		.229		.665	.603	.554			2
3	-.069	-.073		-.354	-.403		-.437				.137	.146	.144		.523	.546	.199			3
4	-.059	-.092	-.089	-.294	-.236	-.359	-.419				.137		.108	.157	.512	.481				4
5	-.088	-.092	-.084	-.289	-.132	-.429					.115	.162	.062	-.084	.402	.201				5
6	-.072	-.005	-.200	-.218	-.351						.111	.124	.241	-.211	.201					6
7	-.055	-.041	-.289	-.204							.123	.101	.046	-.163	.202					7
8	-.059	-.209	-.269								.096	-.012	.018							8
9	-.158	-.241	-.246								-.051	.015	-.011							9
10	-.100	-.257									-.022	.024								10
11	-.157										-.052									11

Table 10

Pressure Coefficients on Delta Wing with Control

Configuration E1 M = 1.61 R = 4.2×10^6

Orif	Upper Surface at Station 1	2	3	4	5	6	7	8	9	Lower Surface at Station 1	2	3	4	5	6	7	8	9	Orif
								α = 00°			δ = 00°								
1	.349	.315	.314	.361	.303	.298	.282												1
2	.066	.044	.037	.081	.069	.029	.053			.076	.058	.040	.074	.029	.034	.025			2
3	.034	.018	.018	.017	.081	.034	-.184			.036		.008	.010	.012	.008				3
4	.037	.016	-.001	.014	.025	.001	-.200			.030	.014	-.001	.020	.005	-.130				4
5	.031	-.002	-.018	-.140	.006	-.170				.010	.002	-.021	-.140	.001	-.148				5
6	.025	.065	.018	-.140	-.141	-.180				.027	.036	.018	-.138	-.140	-.160				6
7	.009	.029	-.135	-.138	-.140					.013	.031	-.131	-.132	-.119					7
8		-.135	-.130							.020	-.133	-.118							8
9	-.121	-.137	-.139							-.118	-.131	-.127							9
10	-.071	.220								-.081	-.134								10
11	-.122									-.124									11
								α = 00°			δ = 10°								
1	.347	.315			.291	.179	.202	-.274									-.133		1
2	.066	.045			.013	-.094	-.114			.074	.059			.093	.183	.201			2
3	.034	.018			.015	-.084	-.249			.035				.117	.131	-.072			3
4	.041	.016			-.013	-.061	-.245			.036	.014			.073	-.057	-.067			4
5	.032	-.009			-.038	-.195				.010	.031			.057	-.081				5
6	.025	.076			-.176	-.203				.025	.026			-.071	-.092				6
7	-.019	.031			-.168					.045	.030			-.080					7
8		-.151								.023	-.109								8
9	-.126	-.165								-.124	-.099								9
10	-.074	.213								-.084									10
11	-.126									-.123									11
								α = 00°			δ = 20°								
1	.345	.314	.312	.334	.176	-.003	.005	-.326									.110		1
2	.066	.045	.039	.052	-.140	-.219	-.249			.073	.058	.037	.011	.251	.401	.409			2
3	.034	.019	.203	.001	-.018	-.232	-.320			.035		.032	.123	.308	.344	.130			3
4	.043	.015	-.097	-.153	-.077	-.199	-.306			.039	.014	-.001	-.041	.255	.078	.132			4
5	.031	.090	-.009	-.199	-.110	-.255				.009	.012	-.040	-.200	.178	.067				5
6	.023	.051	-.039	-.189	-.241	-.253				.027	.049	.122	-.247	.051	.059				6
7	.036	.064	-.186	-.151	-.224					.027	.023	-.065	-.190	.027					7
8		-.145	-.186							.049	-.084	-.065							8
9	-.168	-.176	-.190							-.102	-.058	-.095							9
10	-.084	.205								-.070	-.058								10
11	-.123									-.096									11
								α = 00°			δ = 30°								
1	.342	.311	.308	.341	-.029	-.183	-.195	-.358									.432		1
2	.062	.042	.035	.333	-.289	-.304	-.334			.069	.052	.032	.064	.545	.640	.570			2
3	.030	.013	.095	.401	-.102	-.331	-.377			.031		.007	.203	.638	.622	.435			3
4	.039	.011	-.010	-.322	-.161	-.329	-.348			.035	.009	.000	-.189	.544	.264	.421			4
5	.027	.211	-.005	-.270	-.239	-.348				.003	-.001	-.016	-.284	.389	.334				5
6	.017	.041	-.098	-.216	-.320	-.331				.021	.040	.200	-.313	.258	.315				6
7	.169	.048	-.234	-.153	-.294					.007	.076	-.016	-.301	.205					7
8		-.115	-.237							.012	-.024	-.061							8
9	-.189	-.172	-.241							-.112	-.020	-.118							9
10	-.124	.193								-.015	-.016								10
11	-.086									-.012									11
								α = 03°			δ = 00°								
1	.339	.201	.232	.307	.299	.159	.180	-.396									-.070		1
2	-.018	-.118	-.145	-.194	-.107	-.335	-.347			.146	.164	.153	.222	.249	.202	.212			2
3	-.023	-.052	-.048	-.085	-.042	-.202	-.382			.091		.084	.059	.140	.158	-.037			3
4	-.012	-.042	-.069	-.053	-.153	-.186	-.374			.086	.080	.061	.058	.134	-.022	-.047			4
5	-.032	-.070	-.119	-.189	-.104	-.292				.065	.057	.024	-.085	.101	-.037				5
6	-.026	.009	-.034	-.187	-.248	-.303				.073	.100	.068	-.093	-.059	-.065				6
7	-.039	-.017	-.182	-.184	-.233					.065	.064	-.086	-.086	-.045					7
8		-.170	-.172							.065	-.103	-.089							8
9	-.163	-.176	-.182							-.088	-.096	-.090							9
10	-.109	.226								-.063	-.095								10
11	-.150									-.109									11

Table 10 Continued

Pressure Coefficients on Delta Wing with Control

Configuration E1 M = 1.61 R = 4.2×10^6

Orif	Upper Surface at Station 1	2	3	4	5	6	7	8	9		Lower Surface at Station 1	2	3	4	5	6	7	8	9	Orif
								α = 06°			δ = -30°									
1	.315	.132	.158	.135	-.046	-.106	-.139	.103										-.327		1
2	-.072	-.236	-.323	-.399	.727	.335	.447				.207	.233	.239	.344	.036	-.240	-.253			2
3	-.055	-.091	-.091	-.305	.319	.258	.072				.141		.447	.328	-.128	-.277	-.319			3
4	-.037	-.087	-.101	-.221	-.092	.276	.057				.142	.119	.051	-.222	-.090	-.265	-.336			4
5	-.072	-.085	-.078	-.317	.122	.084					.116	.284	.180	-.202	-.212	-.224				5
6	-.061	-.023	.016	-.339	-.003	.039					.123	.119	.084	-.149	-.320	-.261				6
7	-.054	-.031	-.151	-.330	-.002						.171	.174	-.123	-.125	-.251					7
8		-.128	-.155								.016	-.074	-.154							8
9	-.164	-.135	-.195								-.097	-.117	-.183							9
10	-.080	.218									-.018	-.139								10
11	-.077										-.059									11
								α = 06°			δ = -20°									
1	.317	.134	.161	.072	.206	.144	.103	-.178										-.252		1
2	-.070	-.233	-.320	-.376	.307	.078	.160				.209	.234	.240	.192	.224	-.093	-.107			2
3	-.052	-.088	-.059	-.298	.090	.012	-.179				.144		.220	.131	.018	-.112	-.215			3
4	-.036	-.084	-.124	-.142	-.177	-.036	-.185				.145	.119	.107	-.087	-.002	-.126	-.232			4
5	-.069	-.074	-.078	-.279	-.026	-.122					.116	.138	.111	-.135	-.086	-.116				5
6	-.060	-.040	-.043	-.244	-.161	-.158					.130	.189	.091	-.128	-.239	-.162				6
7	-.035	-.037	-.180	-.255	-.158						.073	.131	-.111	-.121	-.174					7
8		-.155	-.166								.088	-.089	-.130							8
9	-.181	-.162	-.183								-.042	-.096	-.145							9
10	-.105	.228									-.018	-.099								10
11	-.127										-.057									11
								α = 06°			δ = -10°									
1	.319	.136	.162	.123	.336	.220	.212	-.309										-.105		1
2	-.068	-.231	-.316	-.349	-.072	-.213	-.160				.210	.235	.241	.315	.437	.128	.114			2
3	-.050	-.086	-.097	-.226	-.085	-.214	-.335				.145		.085	.055	.135	.103	-.071			3
4	-.035	-.081	-.116	-.131	-.170	-.220	-.324				.148	.118	.140	.015	.091	-.039	-.084			4
5	-.066	-.070	-.093	-.244	-.081	-.244					.117	.087	.104	-.082	.046	-.035				5
6	-.059	-.038	-.061	-.212	-.249	-.263					.133	.186	.099	-.105	-.107	-.084				6
7	-.037	-.038	-.198	-.216	-.252						.087	.126	-.082	-.114	-.094					7
8		-.176	-.178								.126	-.073	-.096							8
9	-.187	-.182	-.199								-.029	-.071	-.107							9
10	-.115	.236									-.012	-.073								10
11	-.151										-.056									11
								α = 06°			δ = 00°									
1	.319	.144	.166	.257	.219	-.034	-.018	-.374										.099		1
2	-.062	-.202	-.282	-.293	-.246	-.373	-.381				.208	.231	.241	.299	.482	.352	.348			2
3	-.045	-.081	-.094	-.212	-.094	-.366	-.414				.144		.169	.144	.333	.309	.113			3
4	-.032	-.078	-.104	-.134	-.194	-.331	-.379				.149	.113	.130	.136	.269	.087	.099			4
5	-.063	-.101	-.064	-.212	-.141	-.329					.117	.122	.069	-.024	.224	.095				5
6	-.055	-.020	-.076	-.217	-.295	-.328					.134	.172	.141	-.034	.057	.058				6
7	-.069	-.052	-.207	-.214	-.298						.127	.118	-.032	-.026	.037					7
8		-.195	-.194								.127	-.055	-.037							8
9	-.191	-.204	-.206								-.041	-.046	-.040							9
10	-.131	.245									-.027	-.042								10
11	-.169										-.072									11
								α = 06°			δ = 10°									
1	.317	.135	.163	.114	.178	-.073	-.059	-.386										.129		1
2	-.069	-.226	-.304	-.302	-.262	-.394	-.400				.207	.233	.241	.222	.462	.403	.393			2
3	-.051	-.087	-.157	-.182	-.094	-.373	-.426				.142		.216	.226	.427	.360	.138			3
4	-.037	-.081	-.114	-.094	-.181	-.324	-.393				.148	.115	.109	.202	.307	.100	.136			4
5	-.068	-.095	-.083	-.240	-.137	-.354					.115	.148	.053	.009	.278	.104				5
6	-.049	-.023	-.109	-.222	-.280	-.348					.130	.153	.201	-.094	.098	.089				6
7	-.077	-.032	-.214	-.214	-.278						.148	.122	.011	-.120	.048					7
8		-.212	-.205								.127	-.025	.020							8
9	-.197	-.236	-.205								-.045	-.005	.004							9
10	-.134	.227									-.032	-.006								10
11	-.172										-.066									11

Table 10 Continued

Pressure Coefficients on Delta Wing with Control

Configuration E1 M = 1.61 R = 4.2×10^6

Orif	Upper Surface at Station 1	2	3	4	5	6	7	8	9		Lower Surface at Station 1	2	3	4	5	6	7	8	9	Orif
								α = 06°			δ = 20°									
1	.315	.135	.162	.333	-.031	-.245	-.254	-.362			.206	.232	.237	.276	.642	.658	.543	.427		1
2	-.068	-.231	-.315	-.176	-.367	-.415	-.414				.142		.169	.308	.661	.642	.431			2
3	-.052	-.088	.192	-.168	-.132	-.415	-.426				.149	.112	.147	.161	.627	.283	.410			3
4	-.037	-.084	-.183	-.282	-.235	-.393	-.390				.114	.112	.068	-.045	.516	.351				4
5	-.066	.053	-.102	-.262	-.198	-.404					.129	.176	.284	-.210	.307	.319				5
6	-.062	-.090	-.164	-.220	-.336	-.385					.115	.143	.074	-.204	.232					6
7	.029	.006	-.272	-.162	-.346						.139	.021	.036							7
8		-.188	-.272								-.021	.056	.002							8
9	-.248	-.232	-.252								.006	.060								9
10	-.136	.219									.010									10
11	-.150																			11
								α = 06°			δ = 30°									
1	.314	.132	.158	.130	-.119	-.336	-.337	-.339			.203	.230	.235	.254	.881	.881	.729	.612		1
2	-.070	-.234	-.320	-.134	-.411	-.432	-.407				.139		.161	.426	.898	.887	.699			2
3	-.055	-.090	-.074	.555	-.158	-.439	-.412				.147	.109	.116	.099	.945	.481	.622			3
4	-.039	-.086	.010	-.354	-.293	-.423	-.379				.110	.107	.231	-.220	.748	.583				4
5	-.069	-.014	-.098	-.341	-.266	-.399					.126	.151	.365	-.251	.548	.519				5
6	-.066	.043	-.270	-.301	-.385	-.359					.110	.268	.093	-.243	.404					6
7	.151	-.021	-.358	-.260	-.389						.110	.094	.015							7
8		-.224	-.240								-.010	.091	-.010							8
9	-.156	-.240	-.245								.127	.065								9
10	-.138	.217									.162									10
11	-.176																			11
								α = 09°			δ = 00°									
1	.279	.078	.073	.207	.228	-.066	-.024	-.418			.276	.310	.310	.435	.370	.335	.344	.051		1
2	-.162	-.387	-.408	-.384	-.215	-.419	-.428				.202		.226	.192	.280	.298	.079			2
3	-.088	-.139	-.165	-.420	-.161	-.408	-.429				.205	.194	.191	.205	.250	.065	.080			3
4	-.073	-.125	-.131	-.246	-.328	-.376	-.416				.182	.181	.118	.030	.220	.072				4
5	-.109	-.168	-.185	-.307	-.256	-.401					.187	.245	.205	.027	.037	.040				5
6	-.094	-.059	-.122	-.267	-.319	-.372					.158	.162	.006	.024	.039					6
7	-.130	-.089	-.233	-.253	-.287						.178	-.016	.002							7
8		-.223	-.220								.000	-.005	.001							8
9	-.214	-.241	-.236								-.001	-.003								9
10	-.151	.257									-.037									10
11	-.190																			11
								α = 12°			δ = -30°									
1	.243	.034	-.034	-.103	.074	-.060	-.011	-.127			.354	.387	.401	.378	.041	-.135	-.147	-.293		1
2	-.273	-.428	-.456	-.475	.679	.168	.224				.269		.523	.425	-.017	-.152	-.237			2
3	-.118	-.207	-.331	-.473	.355	.048	-.139				.258	.262	.226	-.106	-.003	-.172	-.247			3
4	-.109	-.195	-.241	-.357	-.274	-.067	-.187				.249	.337	.324	-.147	-.195	-.152				4
5	-.140	-.179	-.166	-.372	-.268	-.231					.258	.331	.212	-.120	-.314	-.193				5
6	-.128	-.142	-.136	-.339	-.301	-.259					.167	.247	-.059	-.116	-.259					6
7	-.129	-.111	-.277	-.320	-.280						.223	-.005	-.093							7
8		-.185	-.290								.084	.004	-.116							8
9	-.219	-.206	-.289								.065	-.015								9
10	-.123	.228									.053									10
11	-.101																			11
								α = 12°			δ = -20°									
1	.241	.032	-.035	-.089	.440	.191	.205	-.313			.353	.385	.399	.427	.205	.063	.069	-.179		1
2	-.275	-.429	-.454	-.472	.285	-.114	-.095				.268		.280	.376	.115	.089	-.102			2
3	-.119	-.208	-.333	-.464	.024	-.160	-.316				.258	.261	.282	.020	.064	-.065	-.113			3
4	-.110	-.197	-.247	-.318	-.372	-.236	-.329				.248	.222	.261	-.067	-.068	-.059				4
5	-.141	-.168	-.177	-.316	-.281	-.354					.274	.332	.195	-.105	-.243	-.110				5
6	-.128	-.155	-.160	-.278	-.333	-.357					.173	.231	-.045	-.109	-.175					6
7	-.116	-.092	-.273	-.278	-.312						.265	.028	-.055							7
8		-.206	-.294								.076	.022	-.055							8
9	-.244	-.222	-.306								.061	.006								9
10	-.148	.247									.044									10
11	-.141																			11

Table 10 Continued

Pressure Coefficients on Delta Wing with Control

Configuration E1 M = 1.61 R = 4.2×10^6

Orif	Upper Surface at Station 1	2	3	4	5	6	7	8	9		Lower Surface at Station 1	2	3	4	5	6	7	8	9	Orif
							$\alpha = 12^\circ$				$\delta = -10^\circ$									
1	.243	.035	-.033	-.078	.410	.033	.059	-.386										-.014		1
2	-.272	-.426	-.439	-.446	-.170	-.399	-.396				.354	.387	.399	.549	.341	.270	.280			2
3	-.116	-.205	-.336	-.436	-.154	-.362	-.407				.270		.339	.229	.185	.237	.023			3
4	-.107	-.193	-.225	-.272	-.356	-.361	-.390				.259	.273	.307	.133	.112	.032	.027			4
5	-.138	-.189	-.184	-.312	-.287	-.397					.251	.222	.248	.003	.093	.040				5
6	-.126	-.137	-.203	-.267	-.353	-.374					.280	.338	.199	-.043	-.070	-.010				6
7	-.127	-.094	-.277	-.226	-.330						.211	.250	-.009	-.055	-.077					7
8		-.205	-.230								.284	.030	-.007							8
9	-.244	-.250	-.257								.085	.031	-.011							9
10	-.157	.266									.066	.023								10
11	-.157										.038									11
							$\alpha = 12^\circ$				$\delta = 00^\circ$									
1	.239	.035	-.034	.101	.284	.034	.047	-.226										-.046		1
2	-.259	-.376	-.417	-.431	.037	-.112	-.112				.348	.380	.395	.494	.191	.283	.243			2
3	-.120	-.201	-.355	-.427	-.053	-.181	-.257				.265		.289	.284	.276	.265	.009			3
4	-.111	-.189	-.205	-.316	-.291	-.208	-.231				.254	.262	.264	.295	.228	.012	.026			4
5	-.143	-.208	-.131	-.325	-.255	-.305					.246	.245	.200	.086	.157	.024				5
6	-.129	-.127	-.163	-.327	-.263	-.270					.277	.318	.274	.078	-.069	.005				6
7	-.149	-.103	-.280	-.303	-.240						.211	.224	.052	.078	-.077					7
8		-.246	-.270								.246	.033	.052							8
9	-.236	-.268	-.264								.047	.050	.054							9
10	-.162	.269									.040	.048								10
11	-.198										.018									11
							$\alpha = 12^\circ$				$\delta = 10^\circ$									
1	.239	.031	-.036	.027	.008	-.203	-.203	-.298										.305		1
2	-.273	-.406	-.425	-.415	-.252	-.293	-.290				.349	.382	.394	.379	.490	.549	.457			2
3	-.122	-.208	-.299	-.432	-.145	-.331	-.336				.265		.369	.391	.606	.536	.310			3
4	-.112	-.176	-.219	-.312	-.346	-.337	-.308				.255	.258	.254	.389	.514	.212	.315			4
5	-.143	-.175	-.158	-.322	-.315	-.356					.246	.279	.191	.149	.477	.257				5
6	-.111	-.099	-.246	-.305	-.336	-.320					.246	.299	.358	.005	.244	.230				6
7	-.137	-.048	-.220	-.307	-.306						.250	.256	.134	-.057	.161					7
8		-.259	-.285								.253	.083	.120							8
9	-.273	-.283	-.297								.057	.107	.110							9
10	-.152	.243									.058	.105								10
11	-.186										.066									11
							$\alpha = 12^\circ$				$\delta = 20^\circ$									
1	.239	.031	-.037	.124	-.093	-.311	-.298	-.319										.521		1
2	-.276	-.422	-.428	-.312	-.362	-.385	-.353				.348	.381	.394	.459	.771	.779	.618			2
3	-.121	-.208	-.198	-.352	-.176	-.407	-.358				.265		.307	.529	.904	.790	.589			3
4	-.112	-.187	-.232	-.345	-.390	-.404	-.340				.255	.257	.280	.395	.832	.384	.535			4
5	-.143	-.014	-.190	-.299	-.344	-.362					.246	.240	.243	.055	.714	.494				5
6	-.129	-.095	-.233	-.220	-.391	-.331					.244	.305	.453	-.122	.483	.440				6
7	-.035	-.111	-.367	-.169	-.365						.212	.333	.182	-.140	.343					7
8		-.214	-.299								.260	.152	.136							8
9	-.272	-.243	-.198								.082	.177	.099							9
10	-.159	.227									.153	.159								10
11	-.172										.211									11
							$\alpha = 12^\circ$				$\delta = 30^\circ$									
1	.237	.029	-.037	-.052	-.122	-.383	-.351	-.335										.681		1
2	-.277	-.427	-.368	-.172	-.408	-.413	-.365				.348	.381	.393	.398	1.113	1.046	.870			2
3	-.123	-.195	-.212	.469	-.183	-.423	-.368				.264		.303	.560	1.192	1.072	.857			3
4	-.113	-.136	-.125	-.419	-.419	-.416	-.353				.254	.255	.253	.316	1.206	.820	.733			4
5	-.144	-.037	-.186	-.360	-.387	-.380					.245	.237	.462	-.066	.969	.739				5
6	-.108	.024	-.311	-.226	-.407	-.357					.243	.286	.498	-.141	.752	.642				6
7	.134	-.093	-.394	-.226	-.389						.211	.428	.198	-.160	.549					7
8		-.266	-.261								.268	.203	.147							8
9	-.198	-.300	-.191								.217	.211	.105							9
10	-.183	.236									.313	.255								10
11	-.260										.315									11

Table 10 Concluded

Pressure Coefficients on Delta Wing with Control

Configuration E1 M = 1.61 R = 4.2×10^6

Orif	Upper Surface at Station										Lower Surface at Station									Orif
	1	2	3	4	5	6	7	8	9		1	2	3	4	5	6	7	8	9	
								α = 15°			δ = 00°									
1	.198	-.044	-.164	.066	.247	-.046	-.055	-.290			.423	.452	.450	.593	.289	.426	.361	.129		1
2	-.357	-.441	-.433	-.451	-.067	-.185	-.224				.335		.375	.374	.394	.416	.170			2
3	-.150	-.327	-.398	-.435	-.100	-.241	-.305				.320	.373	.370	.419	.345	.128	.183			3
4	-.142	-.299	-.366	-.323	-.342	-.277	-.294				.318	.354	.356	.163	.335	.114				4
5	-.173	-.198	-.264	-.370	-.316	-.356					.403	.418	.384	.161	.042	.105				5
6	-.155	-.113	-.354	-.348	-.329	-.333					.332	.340	.135	.161	.035					6
7	-.181	-.116	-.385	-.256	-.276						.348	.119	.137							7
8		-.245	-.358								.119	.134	.133							8
9	-.257	-.270	-.352								.115	.122								9
10	-.168	.278									.109									10
11	-.193																			11

Table 11

Pressure Coefficients on Delta Wing with Control

Configuration E2 M = 1.61 R = 4.2 x 10^6

Orif	Upper Surface at Station 1	2	3	4	5	6	7	8	9	Lower Surface at Station 1	2	3	4	5	6	7	8	9	Orif
	α = 00°									δ = -30°									
1	.387	.342	.281	.259		.261	-.351										-.360		1
2	.059	.037	.024	.521	.805	.790	.661			.076		.053		-.413	-.384	-.406			2
3	.026	.016		-.012	.771		.202			.043	.027	.015		-.359	-.395	1.753			3
4	.030	.002	.085	-.017	.777	.605	.333			.037		.084	-.065	-.271	-.422				4
5	.007	-.001	-.006	-.089	.651	1.754				.005	.029	-.004	-.180	-.281	-.394				5
6	.012	.109	-.034	-.056	.252					.033	.089	-.012	-.161	-.375					6
7	.029	.021	-.122	-.067						.020	.035	-.172	-.163	-.382					7
8	.057	-.163	-.079							.066	-.137	-.171							8
9	-.091	-.163	-.058							-.072	-.140	-.171							9
10	-.048	-.128								-.046	-.139								10
11	-.146									-.133									11
	α = 00°									δ = -20°									
1	.392	.349	.286	.262		.432	-.209										-.377		1
2	.064	.038	.029	.523	.465	.504	.528			.074		.047		-.332	-.340	-.382			2
3	.030	.024		-.003	.429		.076			.033	.016	.007		-.188	-.351	1.746			3
4	.032	.011	.092	-.057	.430	.411	.108			.031		.082	-.064	-.182	-.353				4
5	.012	.007	-.001	-.127	.405	1.752				-.003	.028	-.013	-.181	-.165	-.353				5
6	.017	.116	-.025	-.078	.072					.028	.080	-.015	-.171	-.277					6
7	.035	.027	-.176	-.085						.016	.018	-.177	-.166	-.275					7
8	.061	-.155	-.133							.056	-.154	-.179							8
9	-.086	-.158	-.097							-.080	-.154	-.176							9
10	-.042	-.151								-.053	-.148								10
11	-.140									-.141									11
	α = 00°									δ = -10°									
1	.395	.353	.288	.268		.582	.051										-.323		1
2	.067	.043	.031	.527	.212	.269	.340			.082		.049		-.093	-.230	-.282			2
3	.030	.026		-.005	.193		.100			.046	.017	.014		-.098	-.208	1.755			3
4	.034	.010	.092	-.062	.212	.218	-.054			.039		.087	-.049	-.095	-.117				4
5	.016	.007	-.002	-.154	.197	1.752				.013	.021	-.005	-.166	-.087	-.231				5
6	.021	.119	-.026	-.100	-.041					.030	.084	-.008	-.154	-.200					6
7	.041	.029	-.180	-.108						.017	.031	-.163	-.156	-.197					7
8	.065	-.152	-.172							.064	-.137	-.171							8
9	-.081	-.157	-.143							-.078	-.145	-.166							9
10	-.039	-.152								-.048	-.139								10
11	-.137									-.135									11
	α = 00°									δ = 00°									
1	.383	.336	.275	.253		1.728	.295										-.231		1
2	.051	.030	.021	.525	.034	.029	.063			.072		.042		.019	.001	.011			2
3	.019	.011		-.013	.021		.116			.035	.004	-.003		-.002	-.005	1.740			3
4	.019	-.003	.085	-.068	.018	.031	-.178			.027		.075	-.064	-.019	-.007				4
5	-.002	-.007	-.013	-.167	.030	1.746				-.005	.017	-.015	-.176	.014	-.158				5
6	.003	.105	-.037	-.132	-.143					.014	.086	-.022	-.150	-.137					6
7	.023	.012	-.187	-.138						.010	.022	-.173	-.152	-.138					7
8	.047	-.168	-.185							.054	-.150	-.172							8
9	-.101	-.170	-.179							-.089	-.156	-.164							9
10	-.058	-.165								-.062	-.152								10
11	-.153									-.148									11
	α = 00°									δ = 10°									
1	.390	.346	.282	.264		1.710	.110										-.023		1
2	.062	.042	.030	.531	-.068	-.269	-.293			.074		.040		.211	.245	.299			2
3	.027	.024		-.002	-.097		-.072			.041	.018	.004		.178	.225	1.743			3
4	.031	.011	.098	-.056	-.072	-.093	-.328			.038		.072	-.065	.167	.192				4
5	.014	.005	-.002	-.176	-.070	1.746				-.003	.018	-.010	-.158	.193	-.060				5
6	.009	.117	-.027	-.149	-.216					.019	.082	-.017	-.126	-.032					6
7	.034	.025	-.178	-.155						.013	.019	-.174	-.125	-.025					7
8	.063	-.152	-.183							.057	-.155	-.172							8
9	-.083	-.156	-.179							-.082	-.151	-.148							9
10	-.047	-.148								-.052	-.149								10
11	-.139									-.144									11

Table 11 Continued

Pressure Coefficients on Delta Wing with Control

Configuration E2 M = 1.61 R = 4.2×10^6

Orif	Upper Surface at Station 1	2	3	4	5	6	7	8	9	Lower Surface at Station 1	2	3	4	5	6	7	8	9	Orif
							α = 00°			δ = 20°									
1	.388	.342	.280	.262		1.705	-.106										.235		1
2	.055	.036	.027	.528	-.167	-.347	-.358			.072		.050		.455	.480	.504			2
3	.025	.019		-.002	-.167		-.157			.042	.027	.014		.436	.511	1.752			3
4	.029	.002	.095	-.063	-.149	-.278	-.382			.042		.078	-.056	.390	.403				4
5	.011	.000	-.006	-.185	-.149	1.751				-.001	.036	-.006	-.131	.419	.076				5
6	.000	.112	-.029	-.155	-.270					.034	.086	-.012	-.086	.096					6
7	.030	.020	-.185	-.155						.017	.029	-.172	-.089	.068					7
8	.059	-.158	-.188							.058	-.145	-.134							8
9	-.089	-.157	-.192							-.078	-.143	-.099							9
10	-.055	-.152								-.040	-.145								10
11	-.146									-.136									11
							α = 00°			δ = 30°									
1	.392	.348	.284	.266		1.691	-.278										.513		1
2	.061	.040	.033	.536	-.369	-.406	-.392			.065		.034		.784	.759	.634			2
3	.032	.024		-.002	-.337		-.233			.035	.017	.003		.754	.715	1.742			3
4	.033	.007	.100	-.068	-.245	-.365	-.400			.044		.065	-.036	.733	.591				4
5	.014	.003	-.001	-.191	-.242	1.750				-.003	.023	-.011	-.093	.642	.269				5
6	.009	.119	-.024	-.157	-.354					.022	.078	-.015	-.069	.231					6
7	.035	.027	-.183	-.164						.010	.025	-.140	-.078	.168					7
8	.065	-.149	-.187							.055	-.143	-.093							8
9	-.084	-.154	-.183							-.093	-.153	-.044							9
10	-.051	-.152								-.049	-.124								10
11	-.139									-.143									11
							α = 06°			δ = -30°									
1	.336	.083	.137	-.022		.194	-.215										-.371		1
2	-.089	-.268	-.335	-.160	.526	.595	.553			.205		.246		-.359	-.318	-.350			2
3	-.063	-.079		-.272	.466		.042			.145	.162	.162		-.179	-.333	1.745			3
4	-.047	-.090	-.067	-.097	.537	.405	.124			.145		.290	.055	-.173	-.358				4
5	-.083	-.089	-.210	-.178	.388	1.747				.105	.138	.164	-.094	-.186	-.333				5
6	-.074	-.002	-.240	-.165	.055					.129	.252	.089	-.089	-.271					6
7	-.047	-.107	-.180	-.167						.126	.159	-.090	-.101	-.281					7
8	-.044	-.270	-.149							.252	-.034	-.098							8
9	-.169	-.292	-.154							.027	-.024	-.095							9
10	-.136	-.204								.036	-.049								10
11	-.222									-.039									11
							α = 06°			δ = -20°									
1	.337	.088	.142	-.013		.230	-.021										-.338		1
2	-.084	-.261	-.323	-.151	.232	.356	.373			.217		.262		-.257	-.236	-.263			2
3	-.061	-.074		-.263	.213		.030			.152	.169	.173		-.118	-.227	1.753			3
4	-.046	-.085	-.056	-.105	.303	.215	-.037			.156		.301	.065	-.081	-.229				4
5	-.079	-.083	-.200	-.174	.174	1.757				.120	.148	.181	-.088	-.099	-.229				5
6	-.066	.003	-.227	-.154	-.067					.141	.260	.113	-.080	-.201					6
7	-.046	-.105	-.192	-.172						.137	.176	-.077	-.089	-.205					7
8	-.043	-.271	-.170							.261	-.020	-.083							8
9	-.167	-.285	-.165							.048	-.016	-.080							9
10	-.133	-.290								.047	-.034								10
11	-.224									-.022									11
							α = 06°			δ = -10°									
1	.349	.089	.145	-.008		.247	.250										-.269		1
2	-.071	-.253	-.313	-.150	.034	.114	.131			.224		.266		-.066	-.101	-.053			2
3	-.052	-.071		-.259	.052		.078			.164	.176	.175		-.068	.007	1.754			3
4	-.039	-.077	-.052	-.106	.116	.073	-.122			.169		.306	.068	.018	-.007				4
5	-.069	-.079	-.197	-.187	.033	1.764				.127	.148	.187	.084	.012	-.194				5
6	-.059	.009	-.228	-.157	-.136					.152	.268	.113	.074	-.138					6
7	-.038	-.096	-.191	-.169						.146	.183	-.073	-.080	-.134					7
8	-.034	-.261	-.186							.276	-.020	-.077							8
9	-.159	-.279	-.185							.049	-.011	-.071							9
10	-.127	-.289								.052	-.024								10
11	-.206									-.017									11

Table 11 Continued

Pressure Coefficients on Delta Wing with Control

Configuration E2 M = 1.61 R = 4.2×10^6

Orif	Upper Surface at Station 1	2	3	4	5	6	7	8	9		Lower Surface at Station 1	2	3	4	5	6	7	8	9	Orif
								α = 06°			δ = 00°									
1	.340	.080	.144	-.019		1.565	.177											-.054		1
2	-.082	-.261	-.327	-.154	-.132	-.250	-.312				.207		.252		.103	.212	.261			2
3	-.064	-.078		-.266	-.074		-.286				.152	.173	.168		.072	.213	1.748			3
4	-.049	-.088	-.064	-.110	-.053	-.106	-.288				.158		.295	.056	.171	.154				4
5	-.079	-.089	-.208	-.195	-.103	1.752					.114	.129	.177	-.089	.169	-.042				5
6	-.073	.000	-.238	-.180	-.252						.135	.254	.108	-.070	-.025					6
7	-.050	-.108	-.201	-.191							.132	.171	-.086	-.072	-.005					7
8	-.043	-.269	-.201								.256	-.027	-.091							8
9	-.169	-.291	-.209								.040	-.023	-.078							9
10	-.140	-.298									.046	-.036								10
11	-.218										-.026									11
								α = 06°			δ = 10°									
1	.338	.080	.143	-.017		1.473	-.080											.182		1
2	-.083	-.263	-.328	-.151	-.288	-.343	-.375				.220		.247		.343	.487	.456			2
3	-.064	-.079		-.262	-.155		-.316				.159	.168	.173		.303	.454	1.750			3
4	-.050	-.088	-.063	-.112	-.153	-.281	-.361				.167		.307	.062	.411	.373				4
5	-.082	-.090	-.207	-.204	-.197	1.751					.122	.144	.183	-.068	.381	.082				5
6	-.075	-.001	-.233	-.194	-.298						.139	.263	.109	-.034	.118					6
7	-.054	-.108	-.201	-.185							.135	.169	-.079	-.033	.120					7
8	-.045	-.269	-.205								.259	-.024	-.070							8
9	-.169	-.290	-.209								.044	-.020	-.053							9
10	-.147	-.299									.046	-.034								10
11	-.217										-.027									11
								α = 06°			δ = 20°									
1	.342	.081	.146	-.015		1.097	-.252											.478		1
2	-.082	-.257	-.325	-.147	-.357	-.398	-.399				.215		.251		.619	.714	.596			2
3	-.064	-.077		-.260	-.304		-.333				.153	.161	.165		.586	.661	1.748			3
4	-.046	-.086	-.062	-.113	-.238	-.361	-.393				.163		.301	.064	.682	.560				4
5	-.078	-.089	-.205	-.202	-.247	1.759					.113	.140	.177	-.018	.602	.282				5
6	-.072	.003	-.230	-.190	-.339						.140	.259	.108	.011	.274					6
7	-.048	-.105	-.201	-.184							.135	.168	-.083	.012	.263					7
8	-.044	-.268	-.204								.257	-.026	-.037							8
9	-.166	-.289	-.210								.038	-.022	.006							9
10	-.144	-.294									.043	-.037								10
11	-.215										-.034									11
								α = 06°			δ = 30°									
1	.335	.074	.139	-.025		.644	-.328											.673		1
2	-.086	-.266	-.333	-.154	-.400	-.426	-.363				.218		.250		.983	.873	.711			2
3	-.069	-.083		-.266	-.373		-.335				.154	.165	.171		.951	.856	1.754			3
4	-.051	-.092	-.072	-.121	-.362	-.371	-.356				.165		.305	.175	.938	.671				4
5	-.086	-.095	-.213	-.204	-.356	1.752					.122	.142	.177	.016	.831	.567				5
6	-.081	-.002	-.242	-.184	-.365						.146	.259	.108	.035	.521					6
7	-.055	-.113	-.213	-.181							.137	.173	.018	.033	.482					7
8	-.048	-.274	-.214								.259	-.024	.015							8
9	-.174	-.297	-.215								.045	.049	.037							9
10	-.151	-.266									.051	.061								10
11	-.220										-.032									11
								α = 12°			δ = -30°									
1	.214	-.110	-.017	-.171		.191	-.117											-.355		1
2	-.288	-.421	-.464	-.435	.393	.400	.422				.351		.400		-.308	-.253	-.320			2
3	-.130	-.181		-.446	.174		-.059				.272	.286	.302		-.109	-.279	1.748			3
4	-.106	-.169	-.201	-.304	.290	.260	.004				.270		.463	.198	-.138	-.298				4
5	-.154	-.182	-.271	-.243	.239	1.750					.244	.267	.314	.006	-.152	-.264				5
6	-.133	-.109	-.335	-.202	-.057						.246	.388	.239	.019	-.247					6
7	-.124	-.177	-.404	-.135							.418	.350	.038	.042	-.254					7
8	-.096	-.307	-.371								.366	.078	.038							8
9	-.210	-.328	-.246								.109	.065	.038							9
10	-.168	-.335									.089	.039								10
11	-.243										.055									11

Table 11 Continued

Pressure Coefficients on Delta Wing with Control

Configuration E2 M = 1.61 R = 4.2×10^6

Orif	Upper Surface at Station 1	2	3	4	5	6	7	8	9	Lower Surface at Station 1	2	3	4	5	6	7	8	9	Orif
$\alpha = 12^\circ$ $\delta = -20^\circ$																			
1	.210	-.116	-.030	-.183		.198	.174										-.287		1
2	-.288	-.428	-.469	-.436	.086	.135	.214			.342		.409		-.138	-.096	-.172			2
3	-.128	-.185		-.459	-.039		-.075			.278	.287	.301		-.032	-.052	1.753			3
4	-.108	-.174	-.205	-.317	.105	.086	-.153			.275		.471	.215	-.020	-.059				4
5	-.157	-.188	-.277	-.244	.063	1.757				.247	.266	.321	.013	-.040	-.197				5
6	-.138	-.114	-.341	-.209	-.156					.243	.395	.246	.022	-.174					6
7	-.127	-.183	-.410	-.134						.414	.353	.050	.046	-.174					7
8	-.101	-.316	-.380							.377	.082	.045							8
9	-.209	-.334	-.319							.121	.067	.041							9
10	-.180	-.341								.094	.043								10
11	-.251									.056									11
$\alpha = 12^\circ$ $\delta = -10^\circ$																			
1	.208	-.115	-.029	-.186		.194	.198										-.153		1
2	-.287	-.430	-.468	-.436	-.101	-.082	-.126			.342		.399		-.047	.103	.142			2
3	-.128	-.185		-.456	-.111		-.045			.273	.282	.294		-.008	.118	1.748			3
4	-.112	-.176	-.207	-.316	-.016	-.005	-.198			.278		.473	.196	.100	.084				4
5	-.160	-.192	-.275	-.253	-.045	1.747				.248	.266	.323	.003	.082	-.134				5
6	-.139	-.112	-.349	-.217	-.204					.244	.395	.241	.016	-.095					6
7	-.131	-.190	-.414	-.144						.417	.352	.045	.046	-.086					7
8	-.099	-.324	-.387							.378	.083	.039							8
9	-.214	-.337	-.350							.120	.066	.035							9
10	-.184	-.347								.091	.043								10
11	-.255									.053									11
$\alpha = 12^\circ$ $\delta = 00^\circ$																			
1	.222	-.104	-.013	-.171		.449	-.033										.096		1
2	-.274	-.420	-.460	-.415	-.327	-.396	-.409			.348		.399		.139	.401	.391			2
3	-.121	-.173		-.448	-.168		-.363			.274	.278	.295		.132	.357	1.750			3
4	-.103	-.171	-.185	-.309	-.134	-.208	-.407			.272		.468	.183	.339	.293				4
5	-.150	-.178	-.263	-.251	-.155	1.754				.237	.251	.319	.003	.278	.038				5
6	-.134	-.105	-.333	-.216	-.296					.235	.383	.239	.024	.056					6
7	-.123	-.186	-.408	-.137						.399	.348	.039	.058	.075					7
8	-.095	-.311	-.374							.371	.079	.037							8
9	-.207	-.328	-.321							.117	.062	.043							9
10	-.179	-.336								.088	.045								10
11	-.249									.055									11
$\alpha = 12^\circ$ $\delta = 10^\circ$																			
1	.220	-.106	-.017	-.174		.350	-.233										.372		1
2	-.276	-.426	-.464	-.423	-.373	-.428	-.428			.337		.392		.371	.617	.538			2
3	-.126	-.178		-.453	-.266		-.378			.276	.277	.290		.381	.574	1.746			3
4	-.108	-.174	-.190	-.314	-.214	-.350	-.422			.276		.470	.174	.566	.476				4
5	-.157	-.180	-.267	-.249	-.235	1.752				.235	.251	.316	.027	.485	.215				5
6	-.138	-.107	-.337	-.216	-.339					.235	.384	.235	.068	.201					6
7	-.128	-.188	-.408	-.124						.401	.344	.035	.100	.234					7
8	-.095	-.315	-.377							.372	.076	.056							8
9	-.208	-.335	-.269							.114	.059	.082							9
10	-.185	-.339								.095	.040								10
11	-.252									.046									11
$\alpha = 12^\circ$ $\delta = 20^\circ$																			
1	.223	-.103	-.011	-.170		.253	-.317										.598		1
2	-.271	-.422	-.458	-.414	-.394	-.430	-.428			.347		.400		.685	.787	.634			2
3	-.119	-.174		-.446	-.374		-.377			.269	.283	.289		.768	.766	1.743			3
4	-.104	-.169	-.183	-.306	-.282	-.381	-.411			.278		.465	.239	.800	.605				4
5	-.152	-.174	-.262	-.246	-.312	1.746				.241	.254	.320	.089	.725	.490				5
6	-.130	-.099	-.331	-.211	-.394					.237	.384	.234	.105	.419					6
7	-.126	-.182	-.402	-.087						.402	.345	.101	.150	.533					7
8	-.092	-.309	-.373							.370	.082	.120							8
9	-.203	-.326	-.202							.114	.074	.129							9
10	-.184	-.335								.096	.103								10
11	-.245									.045									11

Table 11 Continued

Pressure Coefficients on Delta Wing with Control

Configuration E2 M = 1.61 R = 4.2×10^6

Orif	Upper Surface at Station 1	2	3	4	5	6	7	8	9	Lower Surface at Station 1	2	3	4	5	6	7	8	9	Orif
							$\alpha = -06^\circ$			$\delta = -30^\circ$									
1	.292	.347	.165	.144		.081	-.354										-.384		1
2	.193	.201	.228	.879	1.029	.898	.714			-.063		-.286		-.437	-.404	-.418			2
3	.126	.142		.163	.988		.251			-.046	-.082	-.104		-.366	-.407	1.754			3
4	.128	.101	.289	.169	.970	.678	.499			-.051		-.047	-.114	-.357	-.429				4
5	.112	.110	.160	.006	.835	1.754				-.081	-.057	-.206	-.198	-.336	-.406				5
6	.106	.267	.077	.028	.470					-.051	-.018	-.179	-.197	-.383					6
7	.152	.160	.001	.013						-.065	-.095	-.200	-.189	-.371					7
8	.234	-.055	.003							-.036	-.254	-.202							8
9	.018	.014	.014							-.161	-.270	-.194							9
10	.040	.049								-.126	-.133								10
11	-.049									-.216									11
							$\alpha = -06^\circ$			$\delta = -20^\circ$									
1	.294	.357	.169	.146		.142	-.301										-.384		1
2	.192	.207	.228	.884	.635	.735	.622			-.058		-.277		-.396	-.365	-.411			2
3	.133	.143		.169	.625		.072			-.034	-.070	-.098		-.287	-.381	1.757			3
4	.135	.110	.292	.052	.716	.567	.275			-.035		-.037	-.099	-.246	-.405				4
5	.119	.117	.167	-.029	.608	1.754				-.067	-.046	-.200	-.195	-.230	-.406				5
6	.112	.274	.079	.014	.236					-.043	-.010	-.179	-.188	-.329					6
7	.155	.160	-.097	.018						-.056	-.085	-.189	-.182	-.330					7
8	.235	-.049	-.039							-.028	-.237	-.193							8
9	.022	-.051	.000							-.151	-.259	-.183							9
10	.044	-.051								-.113	-.204								10
11	-.045									-.201									11
							$\alpha = -06^\circ$			$\delta = -10^\circ$									
1	.296	.352	.169	.142		.187	-.162										-.370		1
2	.196	.202	.230	.888	.336	.495	.489			-.052		-.279		-.321	-.302	-.354			2
3	.135	.149		.161	.318		-.019			-.025	-.061	-.088		-.149	-.313	1.748			3
4	.133	.112	.292	.037	.414	.383	.081			-.036		-.036	-.102	-.162	-.334				4
5	.120	.115	.163	-.087	.374	1.762				-.059	-.051	-.195	-.191	-.175	-.348				5
6	.114	.271	.075	-.028	.094					-.036	-.003	-.184	-.188	-.272					6
7	.155	.166	-.101	-.019						-.048	-.085	-.190	-.183	-.265					7
8	.243	-.049	-.092							-.027	-.246	-.191							8
9	.024	-.052	-.064							-.147	-.261	-.184							9
10	.044	-.056								-.109	-.241								10
11	-.044									-.206									11
							$\alpha = -06^\circ$			$\delta = 00^\circ$									
1	.294	.353	.170	.143		.076	.089										-.373		1
2	.189	.204	.232	.888	.163	.257	.301			-.061		-.283		-.145	-.304	-.358			2
3	.126	.146		.166	.100		.173			-.036	-.071	-.094		-.095	-.149	1.754			3
4	.128	.112	.287	.043	.237	.223	-.011			-.040		-.045	-.103	-.127	-.171				4
5	.120	.113	.161	-.096	.180	1.756				-.067	-.049	-.207	-.192	-.155	-.325				5
6	.106	.276	.077	-.072	-.013					-.045	-.013	-.189	-.181	-.262					6
7	.152	.163	-.103	-.073						-.057	-.095	-.190	-.188	-.248					7
8	.241	-.050	-.098							-.036	-.250	-.188							8
9	.021	-.051	-.092							-.160	-.267	-.189							9
10	.040	-.056								-.119	-.243								10
11	-.038									-.211									11
							$\alpha = -06^\circ$			$\delta = 10^\circ$									
1	.311	.354	.173	.155		.202	.250										-.162		1
2	.189	.196	.223	.895	-.071	-.118	-.039			-.051		-.277		.035	.117	.094			2
3	.127	.139		.156	-.053		-.321			-.035	-.058	-.098		.053	.073	1.743			3
4	.130	.106	.280	.038	.040	.004	-.230			-.037		-.036	-.112	.071	.005				4
5	.116	.104	.153	-.110	.001	1.749				-.073	-.049	-.203	-.188	.016	-.158				5
6	.100	.265	.070	-.082	-.152					-.044	-.008	-.152	-.175	-.142					6
7	.148	.156	-.109	-.089						-.057	-.090	-.189	-.182	-.148					7
8	.236	-.051	-.106							-.031	-.250	-.183							8
9	.018	-.056	-.110							-.156	-.242	-.175							9
10	.033	-.057								-.115	-.215								10
11	-.044									-.213									11

Table 11 Continued

Pressure Coefficients on Delta Wing with Control

Configuration E2 M = 1.61 R = 4.2×10^6

Orif	Upper Surface at Station 1	2	3	4	5	6	7	8	9	Lower Surface at Station 1	2	3	4	5	6	7	8	9	Orif
							$\alpha = -06^\circ$			$\delta = 20^\circ$									
1	.308	.352	.169	.152		.214	.033										.050		1
2	.189	.195	.223	.906	-.242	-.270	-.257			-.050		-.271		.241	.350	.347			2
3	.125	.139		.161	-.100		-.321			-.033	-.038	-.090		.240	.285	1.754			3
4	.125	.105	.281	.039	-.070	-.197	-.333			-.027		-.032	-.097	.290	.195				4
5	.117	.106	.156	-.105	-.080	1.757				-.063	-.048	-.195	-.160	.188	-.051				5
6	.100	.267	.073	-.082	-.221					-.035	-.006	-.154	-.157	-.040					6
7	.152	.158	-.108	-.089						-.050	-.082	-.189	-.167	-.060					7
8	.236	-.047	-.105							-.025	-.240	-.158							8
9	.019	-.052	-.104							-.154	-.258	-.143							9
10	.033	-.057								-.106	-.210								10
11	-.040									-.206									11
							$\alpha = -06^\circ$			$\delta = 30^\circ$									
1	.306	.352	.196	.150		.201	-.159										.297		1
2	.191	.198	.227	.906	-.337	-.353	-.354			-.058		-.286		.535	.600	.533			2
3	.128	.140		.158	-.183		-.348			-.041	-.044	-.097		.491	.525	1.746			3
4	.129	.109	.282	.037	-.166	-.326	-.391			-.035		-.044	-.091	.528	.426				4
5	.117	.106	.157	-.112	-.162	1.747				-.069		-.208	-.164	.407	.101				5
6	.104	.271	.072	-.093	-.290					-.046	-.012	-.168	-.154	.091					6
7	.156	.163	-.110	-.103						-.060	-.096	-.191	-.166	.015					7
8	.240	-.044	-.108							-.035	-.257	-.138							8
9	.022	-.051	-.112							-.159	-.266	-.136							9
10	.034	-.058								-.110	-.121								10
11	-.037									-.213									11
							$\alpha = -12^\circ$			$\delta = -30^\circ$									
1	.174	.235	.012	-.093		.000	-.356										-.348		1
2	.331	.345	.371	1.190	1.188	1.126	.900			-.252		-.430		-.407	-.387	-.407			2
3	.245	.240		.341	.528		.496			-.099	-.156	-.337		-.383	-.382	1.753			3
4	.254	.230	.462	.324	.728	.884	.671			-.094		-.155	-.265	-.354	-.407				4
5	.230	.224	.306	.160	.718	1.763				-.131	-.128	-.239	-.211	-.353	-.392				5
6	.226	.404	.270	.189	.668					-.103	-.082	-.304	-.194	-.385					6
7	.421	.331	.184	.242						-.120	-.163	-.367	-.067	-.360					7
8	.356	.080	.205							-.068	-.282	-.333							8
9	.104	.157	.205							-.173	-.295	-.142							9
10	.112	.181								-.149	-.295								10
11	.061									-.205									11
							$\alpha = -12^\circ$			$\delta = -20^\circ$									
1	.170	.234	.017	-.100		.037	-.341										-.366		1
2	.335	.343	.374	1.190	.711	.818	.669			-.250		-.427		-.409	-.384	-.418			2
3	.243	.235		.340	.807		.293			-.103	-.155	-.339		-.367	-.388	1.760			3
4	.249	.228	.461	.234	.862	.632	.428			-.103		-.152	-.269	-.300	-.409				4
5	.228	.225	.306	.088	.752	1.755				-.138	-.140	-.240	-.223	-.305	-.398				5
6	.223	.402	.204	.125	.405					-.099	-.090	-.300	-.202	-.375					6
7	.421	.326	.100	.174						-.127	-.162	-.386	-.091	-.335					7
8	.355	.060	.125							-.071	-.282	-.350							8
9	.105	.053	.124							-.178	-.297	-.174							9
10	.108	.094								-.154	-.320								10
11	.038									-.231									11
							$\alpha = -12^\circ$			$\delta = -10^\circ$									
1	.167	.233	.017	1.186		.066	-.243										-.401		1
2	.331	.344	.374	.335	.376	.626	.559			-.258		-.446		-.355	-.361	-.412			2
3	.246	.239		.169	.388		.141			-.120	-.167	-.346		-.272	-.356	1.752			3
4	.250	.232	.459	1.725	.587	.485	.201			-.118		-.162	-.281	-.218	-.367				4
5	.227	.226	.311	.017	.467	1.749				-.148	-.154	-.252	-.239	-.231	-.395				5
6	.221	.405	.205	.058	.192					-.119	-.103	-.318	-.214	-.324					6
7	.418	.326	.053	.107						-.137	-.180	-.398	-.122	-.320					7
8	.358	.064	.077							-.086	-.297	-.360							8
9	.102	.038	-.094							-.199	-.313	-.212							9
10	.105	.026								-.163	-.328								10
11	.042									-.246									11

Table 11 Concluded

Pressure Coefficients on Delta Wing with Control

Configuration E2 M = 1.61 R = 4.2×10^6

Orif	Upper Surface at Station 1	2	3	4	5	6	7	8	9	Lower Surface at Station 1	2	3	4	5	6	7	8	9	Orif
								$\alpha = -12^\circ$		$\delta = 00^\circ$									
1	.167	.225	.009	-.114		.211	-.115										-.392		1
2	.334	.346	.374	1.188	.124	.389	.404			-.271		-.460		-.339	-.305	-.362			2
3	.249	.247		.338	.131		-.172			-.123	-.161	-.369		-.180	-.293	1.750			3
4	.253	.232	.458	.174	.359	.298	.017			-.115		-.206	-.297	-.157	-.221				4
5	.229	.226	.311	-.024	.256	1.750				-.157	-.165	-.267	-.248	-.180	-.324				5
6	.224	.408	.213	.010	.021					-.127	-.111	-.324	-.233	-.293					6
7	.425	.328	.031	.052						-.127	-.195	-.407	-.157	-.301					7
8	.358	.064	.020							-.096	-.316	-.377							8
9	.107	.042	.029							-.206	-.328	-.233							9
10	.106	.031								-.165	-.343								10
11	.049									-.263									11
								$\alpha = -12^\circ$		$\delta = 10^\circ$									
1	.170	.234	.019	-.104		.211	.222										-.312		1
2	.337	.356	.385	1.200	-.043	.150	.196			-.267		-.453		-.168	-.093	-.111			2
3	.251	.256		.350	.002		-.252			-.119	-.161	-.369		-.108	-.062	1.754			3
4	.258	.241	.467	.187	.135	.105	-.142			-.115		-.199	-.290	-.055	-.051				4
5	.236	.236	.324	-.013	.082	1.754				-.153	-.161	-.263	-.244	-.089	-.237				5
6	.230	.420	.224	.002	-.104					-.123	-.111	-.320	-.225	-.225					6
7	.434	.338	.044	.033						-.123	-.191	-.407	-.161	-.237					7
8	.365	.074	.033							-.085	-.312	-.365							8
9	.113	.051	.034							-.202	-.320	-.233							9
10	.108	.041								-.161	-.335								10
11	.053									-.259									11
								$\alpha = -12^\circ$		$\delta = 20^\circ$									
1	.166	.228	.015	-.112		.204	.186										-.099		1
2	.333	.348	.377	1.195	-.211	-.108	-.223			-.253		-.439		.108	.165	.203			2
3	.246	.245		.340	-.022		-.306			-.112	-.158	-.352		-.022	.149	1.751			3
4	.256	.235	.461	.180	-.010	-.049	-.259			-.106		-.165	-.277	.134	.077				4
5	.230	.230	.317	-.014	-.050	1.753				-.140	-.151	-.250	-.223	.074	-.158				5
6	.227	.412	.216	.012	-.187					-.113	-.099	-.313	-.202	-.139					6
7	.431	.331	.035	.040						-.130	-.102	-.395	-.146	-.158					7
8	.363	.068	.027							-.083	-.293	-.357							8
9	.108	.044	.022							-.191	-.308	-.205							9
10	.103	.035								-.148	-.322								10
11	.050									-.242									11
								$\alpha = -12^\circ$		$\delta = 30^\circ$									
1	.173	.239	.020	-.103		.213	-.067										.119		1
2	.339	.358	.385	1.203	-.326	-.303	-.335			-.261		-.439		.407	.409	.395			2
3	.252	.259		.346	-.099		-.329			-.112	-.154	-.350		.184	.390	1.745			3
4	.263	.246	.469	.193	-.124	-.281	-.371			-.102		-.169	-.276	.364	.240				4
5	.239	.239	.323	-.015	-.145	1.749				-.143	-.151	-.250	-.212	.263	-.032				5
6	.234	.423	.226	.011	-.260					-.114	-.095	-.308	-.187	-.032					6
7	.439	.341	.044	.037						-.130	-.175	-.390	-.134	-.094					7
8	.368	.075	.037							-.080	-.295	-.350							8
9	.113	.056	.033							-.201	-.307	-.175							9
10	.109	.041								-.144	-.320								10
11	.059									-.242									11

Table 12

Pressure Coefficients on Delta Wing with Control

Configuration E3 M = 1.61 R = 4.2 x 10^6

Orif	Upper Surface at Station 1	2	3	4	5	6	7	8	9	Lower Surface at Station 1	2	3	4	5	6	7	8	9	Orif
							α = 00°			δ = -30°									
1	.384	.340	.286	.266		-.011	-.339										-.361		1
2	.064	.039	.029	.420	.797	.725	.674			.084		.052		-.422	-.404	-.413			2
3	.032	.022		-.002	.765		.125			.050	.028	.016		-.297	-.419	1.730			3
4	.042	.007	.072	.068	.682	.557	.314			.045		.097	-.273	-.235	-.432				4
5	.012	.009	.006	-.229	.312	1.732				.016	.016	-.001	-.335	-.244	-.404				5
6	.017	.110	.171	-.259	.175					.035	.098	-.067	-.208	-.316					6
7	.033	.024	-.022	-.270						.034	.035	-.229	-.150	-.360					7
8	.056	-.161	-.033							.072	-.153	-.241							8
9	-.087	-.017	-.091							-.065	-.163	-.237							9
10	-.041	-.004								-.042	-.175								10
11	-.135									-.126									11
							α = 00°			δ = -20°									
1	.381	.333	.279	.262		.126	-.207										-.395		1
2	.056	.033	.023	.417	.471	.507	.487			.077		.044		-.346	-.361	-.393			2
3	.025	.012		-.007	.441		-.021			.045	.024	.008		-.204	-.378	1.722			3
4	.036	.000	.064	.064	.423	.285	.072			.040		.087	-.156	-.166	-.376				4
5	.007	.005	-.002	-.162	.138	1.727				.010	.011	-.011	-.208	-.141	-.348				5
6	.015	.106	.067	-.186	.014					.030	.089	-.051	-.186	-.259					6
7	.029	.016	-.054	-.175						.028	.029	-.215	-.180	-.279					7
8	.051	-.182	-.068							.065	-.162	-.219							8
9	-.094	-.095	-.087							-.075	-.162	-.205							9
10	-.051	-.056								-.053	-.165								10
11	-.152									-.141									11
							α = 00°			δ = -10°									
1	.384	.335	.281	.262		.249	.043										-.359		1
2	.058	.032	.024	.420	.216	.276	.298			.076		.053		-.103	-.260	-.316			2
3	.026	.016		-.007	.196		-.055			.040	.023	.013		-.106	-.253	1.727			3
4	.032	.001	.065	.044	.204	.131	-.087			.039		.094	-.068	-.131	-.129				4
5	.007	.002	-.001	-.134	.057	1.727				.011	.015	-.003	-.157	-.062	-.237				5
6	.014	.105	-.004	-.141	-.091					.026	.093	-.028	-.165	-.191					6
7	.031	.020	-.103	-.143						.024	.032	-.181	-.160	-.185					7
8	.057	-.180	-.105							.065	-.156	-.172							8
9	-.092	-.158	-.112							-.076	-.147	-.167							9
10	-.048	-.112								-.050	-.147								10
11	-.149									-.144									11
							α = 00°			δ = 00°									
1	.381	.337	.281	.264		.332	.288										-.255		1
2	.056	.035	.026	.424	.036	.033	.053			.080		.049		.033	.014	.004			2
3	.023	.015		-.005	.023		-.020			.044	.028	.014		.013	-.016	1.722			3
4	.029	.002	.069	.003	.002	-.004	-.187			.043		.091	.003	-.033	-.025				4
5	.004	.004	-.001	-.147	.003	1.727				.010	.015	-.004	-.136	.006	-.176				5
6	.009	.109	-.024	-.126	-.153					.034	.093	-.011	-.134	-.142					6
7	.030	.020	-.153	-.132						.031	.032	-.145	-.134	-.128					7
8	.057	-.175	-.143							.063	-.159	-.136							8
9	-.094	-.162	-.144							-.072	-.145	-.131							9
10	-.052	-.145								-.044	-.132								10
11	-.151									-.141									11
							α = 00°			δ = 20°									
1	.385	.340	.282	.270		.418	-.067										.164		1
2	.060	.042	.029	.440	-.240	-.277	-.272			.075		.040		.453	.461	.437			2
3	.029	.021		-.001	-.174		.091			.038	.023	.006		.439	.411	1.725			3
4	.038	.006	.073	-.155	-.130	-.248	-.329			.045		.075	.061	.379	.267				4
5	.015	.009	.003	-.227	-.108	1.727				.004	.011	-.012	-.152	.123	.027				5
6	.008	.112	-.055	-.184	-.243					.027	.085	.080	-.191	.021					6
7	.035	.024	-.219	-.177						.022	.024	-.052	-.189	.050					7
8	.067	-.177	-.219							.057	-.166	-.062							8
9	.243	-.170	-.216							-.079	-.082	-.080							9
10	-.046	-.170								-.049	-.047								10
11	-.142									-.146									11

Table 12 Continued

Pressure Coefficients on Delta Wing with Control

Configuration E3 M = 1.61 R = 4.2×10^6

Orif	Upper Surface at Station 1	2	3	4	5	6	7	8	9		Lower Surface at Station 1	2	3	4	5	6	7	8	9	Orif
								$\alpha = 00^\circ$			$\delta = 30^\circ$									
1	.384	.338	.281	.270		.292	-.217											.467		1
2	.059	.038	.029	.445	-.330	-.354	-.345				.071		.035		.773	.696	.635			2
3	.027	.020		-.004	-.274		-.017				.035	.017	.003		.741	.604	1.725			3
4	.032	.006	.073	-.279	-.201	-.332	-.364				.040		.072	.061	.643	.486				4
5	.011	.007	.006	-.341	-.208	1.724					-.001	.006	-.016	-.222	.219	.257				5
6	.006	.114	-.073	-.193	-.298						.024	.082	.175	-.290	.182					6
7	.033	.020	-.240	-.164							.017	.022	-.022	-.289	.258					7
8	.066	-.177	-.253								.054	-.163	-.039							8
9	.240	-.182	-.251								-.084	-.018	-.084							9
10	-.049	-.187									-.049	-.003								10
11	-.144										-.135									11
								$\alpha = 06^\circ$			$\delta = -30^\circ$									
1	.332	.086	.143	.007		.025	-.266											-.400		1
2	-.082	-.258	-.327	-.147	.559	.623	.514				.211		.241		-.398	-.358	-.389			2
3	-.062	-.082		-.229	.503		-.044				.142	.161	.160		-.135	-.388	1.733			3
4	-.046	-.092	-.069	-.077	.562	.248	.092				.151		.290	-.180	-.168	-.413				4
5	-.086	-.091	-.213	-.241	-.149	1.733					.115	.125	.129	-.280	-.178	-.351				5
6	-.068	-.006	-.012	-.227	-.105						.139	.257	.013	-.253	-.275					6
7	-.053	-.112	-.091	-.250							.139	.145	-.183	-.222	-.303					7
8	-.049	-.276	-.144								.252	-.056	-.198							8
9	.204	-.161	-.175								.023	-.065	-.186							9
10	-.125	-.099									.007	-.094								10
11	-.220										-.059									11
								$\alpha = 06^\circ$			$\delta = -20^\circ$									
1	.331	.085	.144	.012		.144	-.062											-.367		1
2	-.082	-.254	-.324	-.140	.239	.369	.317				.206		.241		-.302	-.273	-.304			2
3	-.063	-.081		-.229	.225		-.127				.138	.158	.157		-.105	-.281	1.732			3
4	-.046	-.086	-.069	-.076	.307	.062	-.090				.147		.285	-.077	-.080	-.220				4
5	-.086	-.091	-.212	-.205	-.145	1.734					.113	.116	.130	-.152	-.087	-.239				5
6	-.068	.000	-.088	-.207	-.163						.114	.250	.022	-.142	-.220					6
7	-.056	-.108	-.125	-.212							.132	.135	-.165	-.142	-.229					7
8	-.049	-.273	-.156								.249	-.062	-.163							8
9	.204	-.292	-.177								.018	-.062	-.148							9
10	-.133	-.133									.006	-.090								10
11	-.222										-.062									11
								$\alpha = 06^\circ$			$\delta = -10^\circ$									
1	.332	.085	.144	.010		.204	.254											-.242		1
2	-.084	-.251	-.326	-.137	-.013	.080	.092				.203		.239		-.074	-.048	-.019			2
3	-.064	-.082		-.231	.038		-.149				.142	.156	.157		-.077	.038	1.731			3
4	-.051	-.090	-.069	-.092	.095	-.078	-.241				.146		.289	.029	.033	-.008				4
5	-.090	-.091	-.212	-.211	-.113	1.734					.113	.116	.134	-.084	.023	-.172				5
6	-.073	.000	-.170	-.191	-.194						.114	.251	.041	-.097	-.156					6
7	-.054	-.109	-.167	-.194							.130	.140	-.127	-.097	-.158					7
8	-.048	-.274	-.177								.245	-.059	-.108							8
9	.202	-.296	-.190								.023	-.055	-.098							9
10	-.135	-.212									.011	-.081								10
11	-.223										-.058									11
								$\alpha = 06^\circ$			$\delta = 00^\circ$									
1	.341	.095	.146	.015		.146	.174											-.084		1
2	-.067	-.243	-.318	-.131	-.092	-.219	-.281				.213		.242		.094	.211	.227			2
3	-.050	-.073		-.227	-.068		-.101				.144	.159	.161		.068	.200	1.733			3
4	-.035	-.085	-.064	-.122	-.045	-.148	-.289				.156		.287	.120	.172	.115				4
5	-.079	-.084	-.210	-.232	-.133	1.730					.120	.122	.139	-.048	.122	-.084				5
6	-.059	.004	-.202	-.213	-.224						.123	.253	.056	-.053	-.057					6
7	-.043	-.101	-.189	-.218							.135	.143	-.065	-.047	-.039					7
8	-.037	-.265	-.199								.245	-.060	-.059							8
9	.202	-.290	-.207								.026	-.048	-.052							9
10	-.127	-.257									.016	-.052								10
11	-.213										-.059									11

Table 12 Continued

Pressure Coefficients on Delta Wing with Control

Configuration E3 M = 1.61 R = 4.2×10^6

Orif	Upper Surface at Station 1	2	3	4	5	6	7	8	9		Lower Surface at Station 1	2	3	4	5	6	7	8	9	Orif
								α = 06°			δ = 20°									
1	.334	.083	.144	.007		.154	-.223											.407		1
2	-.081	-.264	-.328	-.146	-.346	-.391	-.388				.212		.247		.607	.673	.589			2
3	-.061	-.077		-.245	-.303		-.161				.151	.161	.162		.585	.567	1.728			3
4	-.046	-.089	-.061	-.207	-.267	-.356	-.388				.161		.297	.217	.628	.515				4
5	-.084	-.088	-.209	-.283	-.221	1.732					.114	.125	.141	-.061	.335	.261				5
6	-.076	.002	-.245	-.221	-.308						.137	.257	.220	-.192	.190					6
7	-.051	-.105	-.219	-.198							.140	.142	.053	-.208	.214					7
8	-.045	-.268	-.237								.255	-.056	.039							8
9	.222	-.289	-.250								.027	.070	.015							9
10	-.147	-.270									.025	.073								10
11	-.220										-.059									11
								α = 12°			δ = -30°									
1	.224	-.095	-.012	-.170		.094	-.174											-.389		1
2	-.269	-.416	-.455	-.424	.425	.442	.398				.344		.388		-.317	-.284	-.341			2
3	-.118	-.171		-.457	.194		-.126				.273	.279	.290		-.080	-.326	1.733			3
4	-.099	-.169	-.175	-.348	.322	.135	-.058				.275		.462	-.127	-.144	-.248				4
5	-.150	-.172	-.267	-.321	-.174	1.737					.239	.240	.251	-.240	-.177	-.277				5
6	-.130	-.103	-.343	-.288	-.389						.238	.371	.113	-.199	-.296					6
7	-.118	-.184	-.151	-.295							.414	.295	-.081	-.151	-.321					7
8	-.091	-.313	-.192								.348	.026	-.092							8
9	.196	-.326	-.233								.087	-.003	-.095							9
10	-.163	-.220									.050	-.035								10
11	-.245										.007									11
								α = 12°			δ = -20°									
1	.222	-.097	-.012	-.172		.188	.158											-.321		1
2	-.269	-.426	-.465	-.416	.099	.165	.231				.339		.390		-.168	-.092	-.124			2
3	-.123	-.178		-.461	-.033		-.200				.271	.274	.291		.004	-.036	1.736			3
4	-.104	-.167	-.175	-.326	.127	.025	-.189				.273		.462	.000	-.017	-.049				4
5	-.156	-.175	-.266	-.309	-.255	1.736					.234	.244	.254	-.114	-.051	-.208				5
6	-.135	-.101	-.340	-.260	-.369						.234	.371	.122	-.087	-.205					6
7	-.122	-.191	-.265	-.247							.407	.296	-.066	-.075	-.225					7
8	-.094	-.316	-.190								.348	.030	-.055							8
9	.191	-.333	-.215								.086	.000	-.051							9
10	-.173	-.343									.053	-.030								10
11	-.254										.005									11
								α = 12°			δ = -10°									
1	.223	-.090	-.011	-.168		.174	.207											-.105		1
2	-.270	-.415	-.461	-.416	-.186	-.141	-.180				.343		.395		-.039	.214	.187			2
3	-.121	-.172		-.461	-.113		-.213				.273	.278	.293		-.002	.161	1.738			3
4	-.103	-.169	-.174	-.316	-.028	-.080	-.290				.278		.469	.116	.138	.093				4
5	-.150	-.173	-.269	-.294	-.293	1.738					.242	.247	.261	-.015	.079	-.093				5
6	-.129	-.103	-.344	-.227	-.323						.237	.373	.132	-.028	-.122					6
7	-.118	-.186	-.312	-.214							.407	.297	-.017	-.017	-.112					7
8	-.090	-.313	-.217								.352	.035	.001							8
9	.197	-.329	-.223								.085	.011	.002							9
10	-.171	-.337									.056	-.015								10
11	-.249										.008									11
								α = 12°			δ = 00°									
1	.220	-.098	-.011	-.169		.088	-.039											.069		1
2	-.266	-.424	-.459	-.407	-.275	-.321	-.338				.341		.385		.122	.425	.352			2
3	-.120	-.175		-.460	-.172		-.189				.270	.278	.290		.117	.331	1.736			3
4	-.102	-.172	-.175	-.318	-.129	-.194	-.359				.277		.466	.213	.340	.242				4
5	-.154	-.178	-.269	-.359	-.280	1.737					.238	.240	.259	.030	.205	.028				5
6	-.132	-.105	-.339	-.295	-.277						.234	.368	.148	.050	.034					6
7	-.122	-.190	-.378	-.261							.401	.291	.048	.063	.045					7
8	-.095	-.321	-.246								.347	.030	.057							8
9	.189	-.330	-.235								.087	.013	.059							9
10	-.182	-.338									.057	.030								10
11	-.253										.008									11

Table 12 Continued

Pressure Coefficients on Delta Wing with Control

Configuration E3 M = 1.61 R = 4.2×10^6

Orif	Upper Surface at Station 1	2	3	4	5	6	7	8	9		Lower Surface at Station 1	2	3	4	5	6	7	8	9	Orif
								$\alpha = 12^\circ$			$\delta = 20^\circ$									
1	.218	-.100	-.015	-.172		.044	-.295											.586		1
2	-.272	-.418	-.458	-.418	-.390	-.422	-.413				.341		.387		.667	.759	.636			2
3	-.121	-.177		-.466	-.372		-.244				.273	.275	.289		.753	.723	1.726			3
4	-.105	-.174	-.181	-.278	-.318	-.393	-.407				.278		.464	.388	.761	.617				4
5	-.154	-.170	-.281	-.311	-.346	1.730					.244	.242	.258	.006	.486	.505				5
6	-.134	-.107	-.337	-.235	-.392						.235	.370	.359	-.138	.259					6
7	-.126	-.192	-.409	-.244							.402	.295	.201	-.125	.292					7
8	-.098	-.325	-.271								.348	.069	.152							8
9	.210	-.337	-.226								.089	.171	.112							9
10	-.189	-.340									.058	.156								10
11	-.250										.023									11
								$\alpha = -06^\circ$			$\delta = -30^\circ$									
1	.310	.349	.168	.158		-.095	-.376											-.361		1
2	.194	.193	.220	.865	1.009	.856	.734				-.055		-.278		-.448	-.419	-.426			2
3	.127	.140		.152	.946		.295				-.037	-.076	-.097		-.379	-.435	1.738			3
4	.130	.107	.279	.261	.895	.685	.503				-.042		-.049	-.381	-.385	-.452				4
5	.118	.112	.136	-.183	.522	1.739					-.073	-.069	-.206	-.268	-.361	-.414				5
6	.108	.264	.310	-.271	.340						-.050	-.012	-.191	-.217	-.403					6
7	.145	.133	.116	-.280							-.055	-.094	-.253	-.198	-.407					7
8	.230	.028	.028								-.032	-.251	-.262							8
9	.241	.134	-.017								-.158	-.270	-.257							9
10	.030	.121									-.126	-.180								10
11	.007										-.175									11
								$\alpha = -06^\circ$			$\delta = -20^\circ$									
1	.305	.346	.166	.159		.000	-.214											-.395		1
2	.192	.195	.219	.865	.628	.681	.616				-.055		-.281		-.416	-.394	-.419			2
3	.127	.140		.156	.615		.039				-.039	-.073	-.101		-.314	-.413	1.739			3
4	.128	.110	.280	.211	.636	.521	.253				-.041		-.053	-.216	-.294	-.430				4
5	.120	.111	.133	-.080	.303	1.738					-.072	-.067	-.209	-.276	-.216	-.423				5
6	.107	.263	.203	-.182	.166						-.050	-.014	-.184	-.225	-.311					6
7	.146	.133	.039	-.208							-.054	-.098	-.229	-.197	-.349					7
8	.230	-.075	.036								-.034	-.252	-.247							8
9	.244	.044	-.002								-.161	-.272	-.238							9
10	.023	.064									-.128	-.138								10
11	-.064										-.216									11
								$\alpha = -06^\circ$			$\delta = -10^\circ$									
1	.309	.350	.171	.160		.122	-.140											-.379		1
2	.196	.196	.226	.865	.321	.499	.442				-.054		-.276		-.313	-.312	-.382			2
3	.132	.139		.155	.311		-.085				-.038	-.071	-.093		-.156	-.313	1.737			3
4	.133	.108	.285	.171	.406	.306	.034				-.039		-.045	-.149	-.172	-.341				4
5	.124	.114	.138	-.054	.197	1.739					-.073	-.065	-.202	-.232	-.158	-.358				5
6	.107	.269	.088	-.075	.011						-.048	-.012	-.165	-.223	-.247					6
7	.153	.139	-.008	-.120							-.052	-.092	-.205	-.205	-.238					7
8	.238	-.069	-.014								-.033	-.249	-.213							8
9	.241	-.044	-.015								-.160	-.268	-.212							9
10	.023	.012									-.120	-.145								10
11	-.062										-.217									11
								$\alpha = -06^\circ$			$\delta = 00^\circ$									
1	.307	.348	.167	.156		.171	.130											-.342		1
2	.190	.193	.222	.866	.099	.237	.254				-.055		-.285		-.102	-.187	-.279			2
3	.129	.135		.152	.081		-.141				-.037	-.071	-.106		-.072	-.103	1.736			3
4	.131	.109	.283	.109	.208	.135	-.108				-.038		-.053	-.114	-.070	-.188				4
5	.118	.109	.135	-.063	.114	1.738					-.071	-.072	-.214	-.224	-.126	-.267				5
6	.104	.264	.037	-.051	-.081						-.049	-.016	-.156	-.219	-.215					6
7	.147	.135	-.065	-.059							-.053	-.099	-.193	-.217	-.208					7
8	.231	-.072	-.065								-.033	-.253	-.200							8
9	.235	-.073	-.059								-.161	-.272	-.199							9
10	.013	-.060									-.123	-.156								10
11	-.066										-.219									11

Table 12 Continued

Pressure Coefficients on Delta Wing with Control

Configuration E3 M = 1.61 R = 4.2×10^6

Orif	Upper Surface at Station 1	2	3	4	5	6	7	8	9	Lower Surface at Station 1	2	3	4	5	6	7	8	9	Orif
								$\alpha = -06^\circ$			$\delta = 20^\circ$								
1	.308	.352	.171	.154		.059	.015										.030		1
2	.197	.199	.225	.885	-.310	-.324	-.291			-.062		-.289		.239	.363	.295			2
3	.129	.146		.158	-.101		-.284			-.040	-.063	-.104		.235	.283	1.729			3
4	.132	.111	.285	-.086	-.072	-.161	-.381			-.038		-.053	-.067	.300	.057				4
5	.119	.115	.139	-.159	-.080	1.731				-.075	-.075	-.214	-.196	-.126	-.099				5
6	.103	.279	.015	-.135	-.244					-.050	-.019	-.069	-.210	-.138					6
7	.157	.145	-.165	-.144						-.057	-.101	-.122	-.210	-.130					7
8	.240	-.063	-.158							-.037	-.259	-.146							8
9	.254	-.077	-.149							-.166	-.272	-.165							9
10	.019	-.088								-.120	-.092								10
11	-.060									-.222									11
								$\alpha = -06^\circ$			$\delta = 30^\circ$								
1	.306	.352	.167	.153		.022	-.144										.242		1
2	.199	.200	.225	.893	-.361	-.369	-.356			-.067		-.294		.533	.596	.468			2
3	.130	.145		.157	-.143		-.320			-.044	-.084	-.107		.493	.457	1.726			3
4	.129	.109	.287	-.195	-.146	-.307	-.414			-.042		-.058	-.078	.526	.221				4
5	.117	.113	.138	-.271	-.156	1.726				-.078	-.079	-.219	-.227	-.162	.029				5
6	.103	.273	.000	-.243	-.277					-.056	-.029	-.007	-.228	-.073					6
7	.160	.145	-.188	-.231						-.059	-.108	-.090	-.243	.010					7
8	.243	-.064	-.200							-.044	-.261	-.135							8
9	.254	-.086	-.188							-.169	-.148	-.162							9
10	.020	-.099								-.125	-.075								10
11	-.058									-.229									11
								$\alpha = -12^\circ$			$\delta = -10^\circ$								
1	.171	.242	.015	-.079		-.056	-.272										-.407		1
2	.349	.346	.375	1.189	.367	.639	.553			-.261		-.440		-.394	-.414	-.443			2
3	.250	.242		.285	.391		.152			-.112	-.167	-.358		-.279	-.386	1.738			3
4	.252	.234	.457	.296	.547	.472	.183			-.110		-.171	-.265	-.223	-.384				4
5	.228	.229	.251	.041	.327	1.738				-.145	-.156	-.260	-.324	-.302	-.414				5
6	.226	.392	.216	.004	.104					-.116	-.099	-.320	-.285	-.314					6
7	.421	.291	.125	-.011						-.129	-.184	-.395	-.280	-.331					7
8	.337	.022	.120							-.085	-.303	-.243							8
9	.261	.073	.100							-.198	-.312	-.191							9
10	.077	.092								-.166	-.323								10
11	.003									-.253									11
								$\alpha = -12^\circ$			$\delta = 00^\circ$								
1	.170	.241	.013	-.076		-.033	-.127										-.403		1
2	.352	.345	.375	1.193	.138	.436	.391			-.263		-.437		-.342	-.391	-.434			2
3	.249	.241		.290	.131		.168			-.108	-.156	-.358		-.174	-.293	1.739			3
4	.255	.233	.459	.216	.370	.276	.015			-.109		-.176	-.304	-.170	-.251				4
5	.233	.230	.255	.022	.217	1.739				-.141	-.156	-.265	-.346	-.292	-.387				5
6	.226	.401	.132	.045	.014					-.116	-.103	-.324	-.305	-.288					6
7	.424	.290	.066	.067						-.128	-.184	-.370	-.223	-.317					7
8	.335	.018	.052							-.085	-.305	-.237							8
9	.263	-.001	.060							-.198	-.313	-.216							9
10	.075	.023								-.166	-.329								10
11	.002									-.255									11
								$\alpha = -12^\circ$			$\delta = 20^\circ$								
1	.165	.237	.015	-.081		.089	.187										-.113		1
2	.334	.352	.380	1.204	-.217	-.042	-.110			-.272		-.446		.090	.160	.186			2
3	.249	.248		.290	.014		-.290			-.114	-.167	-.369		-.025	.138	1.727			3
4	.257	.241	.466	.007	.019	-.033	-.260			-.111		-.184	-.309	.134	.005				4
5	.235	.237	.263	-.115	-.040	1.727				-.149	-.162	-.266	-.294	-.241	-.249				5
6	.227	.405	.119	-.078	-.209					-.124	-.110	-.333	-.266	-.315					6
7	.433	.297	-.054	-.064						-.133	-.187	-.264	-.252	-.314					7
8	.343	.027	-.054							-.088	-.309	-.184							8
9	.275	-.007	-.051							-.205	-.321	-.207							9
10	.081	-.024								-.164	-.318								10
11	.009									-.264									11

Table 12 Concluded

Pressure Coefficients on Delta Wing with Control

Configuration E3 M = 1.61 R = 4.2×10^6

Orif	Upper Surface at Station										Lower Surface at Station									Orif
	1	2	3	4	5	6	7	8	9		1	2	3	4	5	6	7	8	9	
	$\alpha = -12^\circ$										$\delta = 30^\circ$									
1	.163	.230	.007	-.089		.086	-.006											.033		1
2	.330	.342	.374	1.201	-.283	-.203	-.244				-.276		-.451		.386	.371	.339			2
3	.248	.241		.285	-.052		-.308				-.115	-.183	-.373		.163	.385	1.729			3
4	.251	.233	.461	-.135	-.084	-.136	-.335				-.110		-.187	-.317	.329	.101				4
5	.225	.228	.258	-.255	-.126	1.730					-.150	-.165	-.270	-.313	-.206	-.235				5
6	.222	.401	.105	-.189	-.270						-.124	-.109	-.335	-.299	-.358					6
7	.430	.285	-.082								-.134	-.190	-.153	-.301	-.332					7
8	.337	.017	-.100								-.095	-.310	-.191							8
9	.265	-.015	-.102								-.206	-.324	-.229							9
10	.066	-.037									-.163	-.148								10
11	.002										-.265									11

Table 13

Pressure Coefficients on Delta Wing with Control

Configuration F M = 1.61 R = 4.2 x 10^6

Orif	Upper Surface at Station 1	2	3	4	5	6	7	8	9	Lower Surface at Station 1	2	3	4	5	6	7	8	9	Orif
								α = 00 °				δ = -20 °							
1	.387	.359	.289	.265	.280	.226	-.220	.246									-.383		1
2	.051	.033	.020	.027	.568	.573	1.592			.076		.058		-.331	-.357	-.325			2
3	.024	.015		.129	.444	.524	.140			.040	.023	.017		-.147	.971	-.372			3
4	.027	.002	-.020	-.063	.471	.402	.175			.043		-.007	-.252	-.134	-.387	-.383			4
5	.001	.004	-.019	-.231	.171	.139				.012	.015	.093	-.294	-.255	-.374				5
6	.015	.058	.151	-.220	.219					.023	.039	-.046	-.278	-.271					6
7	.037	.025	-.039	-.218	.094					.022	.075	-.230	-.237	-.289					7
8	-.002	-.101	-.063							.004	-.130	-.256							8
9	-.154	-.056	-.090							-.124	-.151	-.236							9
10	-.069	-.056								-.025	-.175								10
11	-.125									-.103									11
								α = 00 °				δ = 00 °							
1	.378	.353	.277	.231	.331	.237	.311	-.254									-.254		1
2	.046	.028	.016	.014	.055	.055	1.743			.085		.059		.039	.013	.029			2
3	.011	.009		.006	.041	.021	-.194			.036	.028	.015		.008	-.002	-.203			3
4	.021	-.009	-.026	-.026	.001	.011	-.187			.038		.002	-.006	.008	-.010	-.186			4
5	.000	-.007	-.008	-.128	9.745	-.161				-.002	.021	-.013	-.140	-.004	-.177				5
6	.001	.048	.005	-.135	.208					.027	.037	.013	-.139	-.140					6
7	.023	.012	-.155	-.136	-.147					.023	.028	-.135	-.139	-.144					7
8	-.006	-.156	-.158							.008	-.128	-.141							8
9	-.144	-.146	-.162							-.117	-.128	-.141							9
10	-.087	-.156								-.051	-.128								10
11	-.150									-.140									11
								α = 00 °				δ = 10 °							
1	.052	.036	.025	.256	.225	.207	.040	-.351									-.036		1
2	.016	.008	1.741	.015	-.037	-.197	9.699			.074		.039		.242	.223	.285			2
3	.026	-.002		-.095	-.031	-.153	-.328			.034	.018	.004		.232	.202	-.067			3
4	.007	-.003	.002	-.106	-.069	-.173	-.300			.045		-.006	.016	.140	.136	-.053			4
5	.007	.059	-.050	-.173	1.743	-.273				-.005	.011	-.036	-.129	.069	-.081				5
6	.033	.033		-.190	.191					.014	.025	.075	-.171	-.055					6
7	-.003	-.151	-.183	-.196	-.214					.014	.013	-.088	-.169	-.079					7
8	-.138	-.169	-.194							.000	-.121	-.099							8
9	-.075	-.180	-.199							-.134	-.102	-.102							9
10	-.142	.285								-.053	-.102								10
11	.355									-.143									11
								α = 00 °				δ = 20 °							
1	.381	.357	.278	.259	.176	.202	-.193	-.366									.232		1
2	.052	.032	.027	.020	-.300	-.305	1.667			.076		.041		.575	.499	.525			2
3	.022	.017		.334	-.098	-.305	-.366			.038	.019	.003		.420	.483	.126			3
4	.026	-.002	-.014	-.256	-.158	-.329	-.360			.049		-.007	-.099	.449	.361	.163			4
5	.013	-.002	.102	-.309	1.738	-.335				.004	.017	-.032	-.237	.194	.093				5
6	.004	.057	-.061	-.275	.206					.017	.030	.149	-.234	.088					6
7	.029	.074	-.249	-.234	-.285					.017	.016	-.034	-.234	.094					7
8	.003	-.142	-.262							.000	-.093	-.053							8
9	-.138	-.170	-.251							-.135	-.045	-.068							9
10	-.049	-.193								-.049	-.057								10
11	-.112									-.131									11
								α = 00 °				δ = 30 °							
1	.380	.354	.282	.258	-.028	.202	-.305	-.360									.512		1
2	.052	.031	.018	.021	-.387	-.368	1.628			.072		.038		.915	.785	.695			2
3	.012	.008		.752	-.220	-.381	-.367			.038	.017	.015		.740	.741	.449			3
4	.025	-.005	-.016	-.365	-.249	-.381	-.396			.053		-.004	-.245	.798	.607	.499			4
5	.011	-.003	.274	-.429	1.743	-.377				-.002	.016	-.034	-.293	.385	.408				5
6	.002	.055	-.046	-.402	.191					.021	.038	.220	-.259	.316					6
7	.034	.135	-.281	-.319	-.332					.021	.023	.017	-.246	.345					7
8	.011	-.113	-.322							-.002	-.014	-.028							8
9	-.072	-.165	-.336							-.142	.002	-.055							9
10	.011	-.201								-.031	-.005								10
11	-.052									.011									11

[redacted]

Table 13 Continued

Pressure Coefficients on Delta Wing with Control

Configuration F M = 1.61 R = 4.2×10^6

Orif	Upper Surface at Station 1	2	3	4	5	6	7	8	9	Lower Surface at Station 1	2	3	4	5	6	7	8	9	Orif
							$\alpha = 06^\circ$			$\delta = -20^\circ$									
1	.332	.101	.148	-.015	.281	.230	-.053	.056									-.402		1
2	-.083	-.259	-.324	-.365	.574	.313	1.567			.207		.233		-.349	-.323	-.319			2
3	-.062	-.076		-.273	.296	.188	-.031			.138	.143	.152		-.084	.841	-.387			3
4	-.053	-.094	-.120	-.217	.045	.086	.013			.145		.112	-.141	-.117	-.310	-.385			4
5	-.087	-.094	-.054	-.277	-.048	-.030				.108	.110	.162	-.228	-.210	-.277				5
6	-.074	-.041	.003	-.242	.202					.110	.143	.057	-.222	-.257					6
7	-.050	-.030	-.181	-.290	-.082					.095	.142	-.132	-.208	-.296					7
8	-.077	-.160	-.165							.116	-.078	-.157							8
9	-.200	-.149	-.180							-.055	-.091	-.156							9
10	-.097	-.163								.017	-.101								10
11	-.118									-.059									11
							$\alpha = 06^\circ$			$\delta = 00^\circ$									
1	.330	.083	.142	-.017	.138	.237	.072	-.369									-.068		1
2	-.094	-.270	-.335	-.375	-.292	-.312	1.579			.211		.254		.256	.212	.237			2
3	-.072	-.084		-.214	-.239	-.290	-.353			.144	.158	.163		.187	.170	-.059			3
4	-.053	-.099	-.116	-.148	-.160	-.271	-.368			.161		.116	.108	.149	.134	-.047			4
5	-.086	-.097	-.097	-.222	1.743	-.277				.110	.122	.106	-.047	.132	-.042				5
6	-.079	-.049	-.093	-.223	.214					.123	.153	.129	-.040	-.034					6
7	-.052	-.058	-.218	-.225	-.242					.108	.124	-.065	-.049	-.036					7
8	-.083	-.206	-.225							.116	-.049	-.063							8
9	-.204	-.210	-.219							-.049	-.049	-.059							9
10	-.146	-.212								.019	-.055								10
11	-.181									-.066									11
							$\alpha = 06^\circ$			$\delta = 10^\circ$									
1	.332	.093	.142	-.019	.201	.220	-.160	-.387									.150		1
2	-.089	-.271	-.335	-.358	-.343	-.366	1.536			.221		.247		.495	.445	.443			2
3	-.071	-.082		-.437	-.310	-.366	-.382			.161	.166	.159		.470	.402	.074			3
4	-.053	-.096	-.111	-.159	-.179	-.344	-.387			.161		.124	.202	.383	.321	.104			4
5	-.082	-.100	-.073	-.216	1.747	-.367				.112	.134	.063	-.003	.288	.066				5
6	-.076	-.032	-.169	-.215	.214					.134	.159	.208	-.045	.089					6
7	-.047	-.042	-.252	-.207	-.263					.117	.117	.015	-.137	.064					7
8	-.076	-.209	-.264							.109	-.036	.006							8
9	-.178	-.238	-.250							-.055	-.007	-.008							9
10	-.119	-.257								.016	-.007								10
11	-.166									-.074									11
							$\alpha = 06^\circ$			$\delta = 20^\circ$									
1	.330	.091	.146	-.016	.159	.220	-.300	-.386									.408		1
2	-.086	-.269	-.334	-.302	-.397	-.411	1.455			.216		.245		.682	.738	.629			2
3	-.070	-.083		.398	-.358	-.401	-.376			.149	.155	.161		.521	.683	.334			3
4	-.056	-.095	-.065	-.310	-.277	-.394	-.393			.153		.121	.208	.847	.544	.385			4
5	-.086	-.097	.019	-.383	.210	-.394				.107	.126	.059	-.033	.518	.315				5
6	-.079	.025	-.160	-.360	.210					.127	.144	.296	-.175	.315					6
7	-.047	-.003	-.318	-.261	-.319					.115	.108	.093	-.141	.277					7
8	-.038	-.214	-.343							.102	-.004	.039							8
9	-.115	-.244	-.321							-.052	.053	.045							9
10	-.077	-.248								.010	.053								10
11	-.141									-.053									11
							$\alpha = 06^\circ$			$\delta = 30^\circ$									
1	.324	.084	.132	-.027	-.041	.224	-.344	-.388									.615		1
2	-.089	-.275	-.344	-.194	-.425	-.424	1.344			.218		.249		1.088	.987	.790			2
3	-.071	-.088		.262	-.378	-.422	-.376			.147	.161	.159		.909	.976	.718			3
4	-.061	-.097	.012	-.301	-.335	-.406	-.405			.159		.118	.181	.978	.693	.659			4
5	-.092	-.104	.092	-.347	-.206	-.405				.112	.122	.079	-.103	.771	.663				5
6	-.085	.134	-.202	-.323	.211					.128	.158	.355	-.214	.631					6
7	-.056	.029	-.331	-.325	-.378					.123	.158	.122	-.117	.559					7
8	.109	-.209	-.366							.092	.089	.092							8
9	-.019	-.240	-.348							-.053	.101	.077							9
10	-.041	-.242								.075	.086								10
11	-.098									.075									11

Table 13 Continued

Pressure Coefficients on Delta Wing with Control

Configuration F M = 1.61 R = 4.2 x 10^6

Orif	Upper Surface at Station 1	2	3	4	5	6	7	8	9		Lower Surface at Station 1	2	3	4	5	6	7	8	9	Orif
								α = 12°			δ = -20°									
1	.207	-.100	-.021	-.197	.301	.215	.076	-.153										-.317		1
2	-.284	-.422	-.474	-.493	.599	.169	1.469				.345		.402		.006	-.160	-.108			2
3	-.136	-.185		-.498	.319	.012	-.177				.277	.278	.290		.028	.668	-.218			3
4	-.116	-.179	-.215	-.403	-.038	-.110	-.214				.271		.257	-.051	-.044	.004	-.196			4
5	-.153	-.194	-.116	-.367	-.301	-.290					.234	.248	.281	-.174	-.184	-.183				5
6	-.138	-.163	-.125	-.319	.186						.236	.277	.202	-.145	-.243					6
7	-.133	-.089	-.270	-.305	-.312						.217	.248	-.027	-.142	-.216					7
8	-.138	-.215	-.297								.249	.021	-.072							8
9	-.246	-.220	-.310								.057	.014	-.076							9
10	-.141	-.233									.072	.001								10
11	-.138										.031									11
								α = 12°			δ = 00°									
1	.197	-.111	-.030	-.209	-.011	.219	-.209	-.414										.065		1
2	-.297	-.431	-.471	-.482	-.430	-.440	1.187				.345		.402		.388	.335	.366			2
3	-.138	-.191		-.457	-.390	-.428	-.400				.277	.281	.288		.319	.307	.042			3
4	-.115	-.187	-.227	-.373	-.355	-.406	-.413				.277		.258	.237	.290	.257	.063			4
5	-.163	-.200	-.183	-.375	-.276	-.394					.245	.251	.243	.049	.260	.055				5
6	-.143	-.169	-.165	-.354	.202						.247	.281	.253	.049	.070					6
7	-.138	-.129	-.274	-.365	-.332						.208	.239	.036	.038	.055					7
8	-.145	-.271	-.275								.231	.025	.028							8
9	-.260	-.257	-.276								.048	.045	.035							9
10	-.205	-.269									.081	.044								10
11	-.223										.030									11
								α = 12°			δ = 10°									
1	.197	-.111	-.030	-.210	.152	.212	-.307	-.377										.292		1
2	-.305	-.434	-.475	-.472	-.445	-.428	1.072				.343		.397		.728	.596	.553			2
3	-.142	-.192		-.479	-.408	-.421	-.366				.275	.281	.292		.654	.566	.236			3
4	-.120	-.191	-.198	-.372	-.392	-.397	-.397				.279		.257	.392	.522	.451	.290			4
5	-.165	-.197	-.163	-.362	-.329	-.384					.225	.244	.187	.149	.446	.241				5
6	-.145	-.102	-.275	-.269	.195						.232	.275	.343	.068	.232					6
7	-.136	-.086	-.326	-.286	-.379						.206	.219	.110	-.034	.220					7
8	-.125	-.285	-.305								.219	.055	.097							8
9	-.220	-.308	-.278								.028	.082	.100							9
10	-.148	-.319									.065	.098								10
11	-.189										.020									11
								α = 12°			δ = 20°									
1	.196	-.108	-.029	-.203	.014	.222	-.364	-.380										.547		1
2	-.302	-.436	-.458	-.293	-.429	-.429	.967				.345		.393		.916	.890	.669			2
3	-.136	-.197		.370	-.429	-.424	-.371				.274	.276	.285		.765	.852	.599			3
4	-.113	-.189	-.068	-.401	-.419	-.407	-.398				.276		.244	.454	.971	.623	.572			4
5	-.167	-.162	-.169	-.318	-.371	-.401					.237	.246	.177	.150	.712	.542				5
6	-.145	-.025	-.287	-.206	.201						.241	.275	.429	-.105	.518					6
7	-.107	-.095	-.376	-.127	-.393						.196	.231	.188	-.127	.483					7
8	-.038	-.257	-.347								.206	.105	.153							8
9	-.145	-.300	-.187								.022	.147	.163							9
10	-.124	-.312									.073	.147								10
11	-.172										.073									11
								α = 12°			δ = 30°									
1	.204	-.107	-.028	-.191	-.136	.231	-.390	-.367										.682		1
2	-.297	-.433	-.346	-.201	-.431	-.420	.897				.338		.398		1.197	1.130	.922			2
3	-.133	-.173		.409	-.412	-.412	-.370				.277	.286	.289		1.024	.025	.870			3
4	-.115	-.143	-.117	-.320	-.411	-.405	-.388				.285		.250	.414	9.147	.903	.723			4
5	-.162	-.127	-.090	-.343	-.390	-.404					.242	.246	.194	.062	.971	.778				5
6	-.117	.105	-.250	-.310	.206						.242	.272	.481	-.124	.822					6
7	.011	-.023	-.343	-.280	-.407						.220	.303	.253	-.151	.669					7
8	.075	-.205	-.320								.219	.179	.209							8
9	-.080	-.246	-.318								.024	.228	.167							9
10	-.095	-.233									.177	.197								10
11	-.170										.210									11

Table 13 Continued

Pressure Coefficients on Delta Wing with Control

Configuration F M = 1.61 R = 4.2×10^6

Orif	Upper Surface at Station 1	2	3	4	5	6	7	8	9		Lower Surface at Station 1	2	3	4	5	6	7	8	9	Orif
								$\alpha = -06^\circ$			$\delta = -20^\circ$									
1	.307	.391	.171	.155	.273	.269	-.257	.386										-.376		1
2	.176	.190	.211	.229	.546	.768	1.414				-.055		-.291		-.300	-.374	-.319			2
3	.120	.136		.130	.546	.698	.317				-.042	-.084	-.117		-.271	.574	-.338			3
4	.120	.094	.104	.175	.851	.585	.338				-.043		-.058	-.319	-.269	-.317	-.346			4
5	.115	.100	.081	-.080	-.025	.317					-.083	-.076	.015	-.402	-.300	-.345				5
6	.102	.161	.281	-.196	.254						-.060	-.015	-.174	-.393	-.271					6
7	.132	.107	.083	-.130	.221						-.060	.002	-.300	-.292	-.311					7
8	.096	-.021	.036								-.042	-.192	-.339							8
9	-.084	.035	.014								-.105	-.233	-.315							9
10	-.004	.037									-.044	-.239								10
11	-.066										-.134									11
								$\alpha = -06^\circ$			$\delta = 00^\circ$									
1	.293	.385	.158	.132	.229	.302	.021	-.142										-.229		1
2	.179	.200	.219	.238	.240	.236	.807				-.067		-.293		-.142	-.214	-.155			2
3	.123	.138		.133	.152	.151	-.099				-.044	-.077	-.108		-.142	-.199	-.179			3
4	.124	.093	.111	.111	.126	.133	-.170				-.050		-.105	-.129	-.108	-.172	-.203			4
5	.102	.106	.130	-.029	.005	-.082					-.076	-.077	-.104	-.227	-.073	-.152				5
6	.113	.172	.115	-.037	.277						-.059	-.057	-.071	-.227	-.174					6
7	.130	.129	-.069	-.044	-.116						-.059	-.058	-.212	-.219	-.131					7
8	.099	-.064	-.072								-.077	-.191	-.212							8
9	-.070	-.071	-.069								-.189	-.191	-.201							9
10	-.002	-.069									-.109	-.191								10
11	-.069										-.171									11
								$\alpha = -06^\circ$			$\delta = 10^\circ$									
1	.292	.384	.156	.134	.284	.292	.253	-.236										-.238		1
2	.185	.201	.225	.240	.128	.056	.744				-.074		-.297		.141	-.037	.008			2
3	.124	.137		.128	.103	.054	-.173				-.047	-.084	-.117		-.098	-.088	-.225			3
4	.126	.102	.114	-.018	.052	.039	-.173				-.051		-.111	-.178	-.208	-.142	-.225			4
5	.109	.111	.117	-.116	-.016	-.140					-.070	-.080	-.069	-.250	-.120	-.206				5
6	.111	.176	.089	-.131	.273						-.066	-.063	-.067	-.223	-.193					6
7	.127	.127	-.113	-.127	-.185						-.055	-.029	-.199	-.228	-.189					7
8	.108	-.076	-.122								-.074	-.173	-.199							8
9	-.063	-.080	-.125								-.188	-.181	-.188							9
10	-.002	-.090									-.108	-.194								10
11	-.065										-.146									11
								$\alpha = -06^\circ$			$\delta = 20^\circ$									
1	.292	.389	.154	.136	.186	.286	-.002	-.330										-.019		1
2	.187	.195	.228	.245	.034	-.186	.671				-.071		-.303		.538	.232	.264			2
3	.126	.142		.243	-.004	-.178	-.286				-.052	-.084	-.111		.211	.118	-.101			3
4	.125	.107	.114	-.133	-.099	-.178	-.269				-.052		-.107	-.186	-.019	.023	-.056			4
5	.113	.115	.187	-.224	-.147	-.203					-.092	-.085	-.085	-.269	-.067	-.101				5
6	.111	.182	.062	-.201	.271						-.066	-.068	.000	-.262	-.136					6
7	.126	.148	-.131	-.197	-.263						-.066	-.045	-.181	-.281	-.135					7
8	.116	-.074	-.156								-.087	-.154	-.174							8
9	-.056	-.094	-.169								-.190	-.140	-.174							9
10	.007	-.104									-.100	-.157								10
11	-.047										-.116									11
								$\alpha = -06^\circ$			$\delta = 30^\circ$									
1	.292	.383	.155	.133	.005	.283	-.223	-.364										.307		1
2	.179	.199	.226	.242	-.286	-.309	.607				-.076		-.307		.907	.506	.573			2
3	.123	.138		.588	-.118	-.320	-.366				-.044	-.087	-.116		.601	.367	.188			3
4	.125	.109	.115	-.253	-.224	-.334	-.345				-.044		-.108	-.247	.485	.353	.248			4
5	.113	.111	.332	-.375	-.264	-.325					-.083	-.084	-.093	-.319	.040	.124				5
6	.105	.178	.066	-.326	.273						-.060	-.070	.066	-.331	.041					6
7	.122	.208	-.188	-.285	-.341						-.062	-.045	-.142	-.358	.100					7
8	.111	-.055	-.206								-.081	-.098	-.141							8
9	-.023	-.093	-.210								-.196	-.098	-.158							9
10	.055	-.121									-.075	-.119								10
11	-.005										-.040									11

[redacted]

Table 13 Concluded

Pressure Coefficients on Delta Wing with Control

Configuration F M = 1.61 R = 4.2 x 10^6

Orif	Upper Surface at Station 1	2	3	4	5	6	7	8	9		Lower Surface at Station 1	2	3	4	5	6	7	8	9	Orif
								$\alpha = -12°$			$\delta = -20°$									
1	.149	.239	-.005	-.129	.160	.330	-.285	.522										-.386		1
2	.333	.345	.377	.372	.875	.920	1.292				-.273		-.424		-.404	-.430	-.403			2
3	.246	.249		.115	.759	.879	.629				-.113	-.191	-.273		-.395	.399	-.402			3
4	.246	.234	.248	.459	.973	.704	.543				-.117		-.063	-.357	-.396	-.408	-.402			4
5	.232	.234	.215	.116	.391	.572					-.149	-.130	-.150	-.262	-.357	-.403				5
6	.229	.309	.425	-.095	.334						-.125	-.040	-.275	-.197	-.392					6
7	.245	.237	.194	-.115	.448						-.099	-.087	-.374	-.130	-.330					7
8	.207	.104	.150								-.045	-.233	-.302							8
9	.007	.146	.161								-.125	-.276	-.147							9
10	.089	.146									-.095	-.304								10
11	.089										-.140									11
								$\alpha = -12°$			$\delta = 00°$									
1	.166	.261	.023	-.113	.070	.300	-.137	.017										-.305		1
2	.326	.337	.370	.373	.369	.369	.569				-.260		-.442		-.219	-.300	-.239			2
3	.245	.236		.273	.338	.324	.011				-.112	-.171	-.351		-.243	-.315	-.283			3
4	.245	.225	.238	.242	.290	.282	-.015				-.112		-.185	-.328	-.260	-.299	-.288			4
5	.225	.222	.270	.062	.171	.038					-.146	-.156	-.174	-.364	-.260	-.297				5
6	.219	.296	.240	.049	.291						-.119	-.163	-.154	-.346	-.283					6
7	.240	.248	.029	.039	-.002						-.119	-.142	-.256	-.340	-.211					7
8	.222	.029	.026								-.143	-.249	-.256							8
9	.029	.028	.031								-.234	-.249	-.251							9
10	.079	.028									-.145	-.248								10
11	.029										-.188									11
								$\alpha = -12°$			$\delta = 10°$									
1	.158	.258	.015	-.120	.369	.305	.161	-.122										-.333		1
2	.317	.337	.367	.371	.248	.196	.545				-.266		-.440		.167	-.164	-.202			2
3	.241	.237		.357	.218	.174	-.100				-.114	-.178	-.344		-.156	-.228	-.310			3
4	.240	.222	.242	.075	.152	.135	-.082				-.114		-.187	-.316	-.367	-.278	-.306			4
5	.216	.220	.259	-.054	.035	-.085					-.151	-.159	-.131	-.316	-.307	-.348				5
6	.219	.306	.194	-.054	.288						-.121	-.159	-.160	-.257	-.307					6
7	.237	.242	-.031	-.059	-.171						-.122	-.103	-.283	-.250	-.278					7
8	.228	.015	-.049								-.138	-.232	-.283							8
9	.020	.002	-.043								-.239	-.228	-.271							9
10	.070	-.007									-.122	-.244								10
11	.029										-.142									11
								$\alpha = -12°$			$\delta = 20°$									
1	.156	.258	.016	-.120	.219	.312	.117	-.254										-.185		1
2	.323	.341	.364	.373	.155	-.053	.519				-.260		-.440		.542	.111	.095			2
3	.240	.236		.302	-.094	-.064	-.182				-.105	-.172	-.343		.254	-.030	-.213			3
4	.242	.222	.242	-.044	-.055	.071	-.173				-.105		-.179	-.379	-.123	-.162	-.222			4
5	.220	.224	.295	-.152	-.094	-.152					-.147	-.152	-.126	-.360	-.332	-.323				5
6	.221	.302	.191	-.128	.290						-.115	-.164	-.093	-.305	-.293					6
7	.237	.246	-.037	-.126	-.230						-.122	-.095	-.261	-.317	-.314					7
8	.237	.015	-.075								-.133	-.187	-.290							8
9	.037	-.002	-.086								-.229	-.197	-.290							9
10	.078	-.011									-.114	-.226								10
11	.029										-.103									11
								$\alpha = -12°$			$\delta = 30°$									
1	.156	.251	.014	-.126	.039	.313	-.141	-.325										.084		1
2	.318	.336	.366	.374	-.098	-.239	.482				-.267		-.447		.875	.361	.344			2
3	.237	.233		.556	-.027	-.246	-.311				-.105	-.184	-.351		.619	.182	-.029			3
4	.243	.225	.241	-.172	-.172	-.196	-.282				-.112		-.185	-.373	.414	.013	-.029			4
5	.220	.222	.427	-.312	-.199	-.249					-.143	-.159	-.146	-.400	-.346	-.214				5
6	.211	.298	.167	-.244	.291						-.120	-.159	-.050	-.368	-.261					6
7	.233	.288	-.065	-.216	-.318						-.120	-.111	-.240	-.367	-.263					7
8	.239	.017	-.110								-.135	-.154	-.291							8
9	.067	-.011	-.126								-.227	-.166	-.290							9
10	.110	-.022									-.098	-.215								10
11	.056										-.064									11

Table 14

Pressure Coefficients on Delta Wing with Control

Configuration F1 M = 1.61 R = 4.2×10^6

Orif	Upper Surface at Station 1	2	3	4	5	6	7	8	9		Lower Surface at Station 1	2	3	4	5	6	7	8	9	Orif
								$\alpha = 00°$			$\delta = -30°$									
1	.343	.292	.303	.300	.098			.404										-.342		1
2	.064	.038	.030	.429	.845	.776					.073	.060	.043	.494	-.312	-.356	-.352			2
3	.026	.015	.007	-.007	.771	.747	.365				.036		.009	-.018	-.257	-.350	-.373			3
4	.036	.005	.086	-.069	.774	.630	.389				.028	.010	.096	-.066	-.246	-.340	-.368			4
5	.015	.007	-.028	-.116	.694	.315					.007	.003	-.025	-.192	-.247	-.358				5
6	.024	.120	-.027	-.076							.023	.111	-.024	-.181	-.324					6
7	.013	.021	-.184	-.084	.220						.013	.038	-.178	-.172						7
8		-.148	-.088								.077	-.137	-.170							8
9	-.080	-.162	-.097								-.076	-.142	-.180							9
10	-.034	.237									-.047	-.147								10
11	-.122										-.119									11
								$\alpha = 00°$			$\delta = -20°$									
1	.346	.298	.307	.303	.291			.164										-.311		1
2	.066	.042	.032	.433	.468	.507					.078	.064	.048	.491	-.234	-.300	-.300			2
3	.028	.019	.010	-.008	.427	.458	.094				.038		.014	-.015	-.126	-.282	-.341			3
4	.038	.012	.092	-.064	.468	.452	.140				.032	.014	.101	-.056	-.140	-.263	-.334			4
5	.021	.011	-.027	-.167	.448	.110					.010	.006	-.024	-.177	-.155	-.306				5
6	.027	.123	-.023	-.102							.027	.114	-.020	-.169	-.255					6
7	.014	.026	-.178	-.091	.039						.018	.044	-.170	-.162						7
8		-.143	-.175								.079	-.137	-.158							8
9	-.076	-.155	-.143								-.069	-.140	-.168							9
10	-.031	.241									-.040	-.143								10
11	-.119										-.115									11
								$\alpha = 00°$			$\delta = -10°$									
1	.347	.301	.306	.306	.330			-.034										-.247		1
2	.064	.041	.034	.441	.230	.287					.079	.064	.046	.494	-.104	-.198	-.208			2
3	.028	.021	.010	-.009	.196	.243	-.049				.038		.012	-.017	-.040	-.150	-.267			3
4	.038	.014	.095	-.061	.240	.245	-.020				.034	.018	.099	-.058	-.058	-.097	-.280			4
5	.023	.012	-.026	-.166	.212	-.020					.009	.007	-.020	-.171	-.080	-.196				5
6	.027	.128	-.022	-.132							.028	.112	-.023	-.156	-.191					6
7	.014	.029	-.179	-.119	-.068						.016	.044	-.164	-.151						7
8		-.140	-.171								.078	-.138	-.153							8
9	-.073	-.154	-.174								-.072	-.139	-.159							9
10	-.027	.241									-.039	-.144								10
11	-.116										-.115									11
								$\alpha = 00°$			$\delta = 00°$									
1	.349	.300	.307	.307	.286			-.266										-.261		1
2	.063	.040	.031	.443	.013	-.001					.077	.061	.046	.499	.020	.005	-.010			2
3	.028	.018	.011	-.009	-.009	-.018	-.215				.039		.011	-.017	-.004	-.003	-.213			3
4	.035	.017	.099	-.060	-.016	.001	-.202				.029	.013	.097	-.059	-.002	-.005	-.197			4
5	.031	.011	-.043	-.166	-.011	-.185					.011	.007	-.025	-.164	-.002	-.172				5
6	.022	.124	-.024	-.147							.029	.111	-.020	-.139	-.143					6
7	.010	.030	-.177	-.142	-.171						.011	.043	-.170	-.134						7
8		-.139	-.167								.078	-.138	-.158							8
9	-.068	-.155	-.173								-.069	-.142	-.151							9
10	-.031	.239									-.038	-.146								10
11	-.116										-.116									11
								$\alpha = 00°$			$\delta = 10°$									
1	.348	.300	.307	.305	.274			-.280										-.217		1
2	.066	.043	.034	.447	.001	-.049					.078	.065	.043	.509	.078	.092	.088			2
3	.028	.019	.013	-.006	-.016	-.041	-.238				.039		.013	-.019	.063	.073	-.173			3
4	.039	.017	.096	-.057	-.027	-.023	-.220				.034	.015	.094	-.060	.067	.072	-.149			4
5	.032	.013	-.032	-.169	-.024	-.193					.012	.006	-.026	-.167	.073	-.132				5
6	.022	.126	-.024	-.159							.027	.112	-.020	-.129	-.094					6
7	.010	.032	-.176	-.158	-.161						.011	.043	-.171	-.122						7
8		-.137	-.165								.077	-.138	-.158							8
9	-.069	-.151	-.179								-.073	-.142	-.146							9
10	-.032	.239									-.036	-.147								10
11	-.117										-.115									11

Table 14 Continued

Pressure Coefficients on Delta Wing with Control

Configuration F1 M = 1.61 R = 4.2×10^6

Orif	Upper Surface at Station 1	2	3	4	5	6	7	8	9		Lower Surface at Station 1	2	3	4	5	6	7	8	9	Orif
								$\alpha = 00^\circ$			$\delta = 20^\circ$									
1	.345	.297	.304	.301	.225			-.301			.073	.060	.039	.511	.296	.342	.332	-.028		1
2	.067	.044	.032	.447	-.105	-.152					.034		.007	-.020	.246	.295	-.035			2
3	.030	.017	.013	-.006	-.070	-.129	-.282				.038	.011	.092	-.066	.288	.282	.012			3
4	.040	.014	.096	-.056	-.090	-.134	-.262				.009	.002	-.030	-.164	.282	-.005				4
5	.030	.009	-.028	-.175	-.100	-.257					.026	.105	-.024	-.106	.046					5
6	.020	.129	-.023	-.177							.007	.036	-.172	-.094						6
7	.010	.030	-.171	-.174	-.209						.072	-.142	-.166							7
8		-.139	-.171								-.075	-.150	-.116							8
9	-.068	-.152	-.189								-.038	-.151								9
10	-.036	.235									-.117									10
11	-.114																			11
								$\alpha = 00^\circ$			$\delta = 30^\circ$									
1	.352	.299	.304	.303	.145			-.313			.075	.060	.039	.514	.547	.565	.485	.166		1
2	.067	.044	.035	.455	-.181	-.212					.032		.008	-.017	.490	.532	.144			2
3	.031	.019	.013	-.003	-.131	-.195	-.310				.040	.011	.093	-.072	.520	.439	.191			3
4	.041	.014	.096	-.060	-.144	-.210	-.291				.011	.003	-.031	-.129	.483	.135				4
5	.029	.010	-.027	-.185	-.154	-.301					.026	.105	-.024	-.078	.190					5
6	.021	.130	-.026	-.190							.004	.039	-.179	-.084						6
7	.011	.031	-.175	-.183	-.242						.071	-.140	-.109							7
8		-.140	-.181								-.073	-.146	-.072							8
9	-.063	-.148	-.199								-.032	-.150								9
10	-.036	.236									-.115									10
11	-.111																			11
								$\alpha = 03^\circ$			$\delta = 00^\circ$									
1	.344	.224	.234	.209	.265			-.224			.143	.152	.155	.741	.113	.109	.176	-.139		1
2	.003	-.055	-.110	.003	.000	-.051					.089		.093	.111	.069	.085	-.113			2
3	-.010	-.035	-.031	-.102	.009	-.019	-.214				.084	.064	.188	-.005	.081	.140	-.098			3
4	.003	-.030	.002	-.108	-.009	-.053	-.197				.061	.060	.106	-.140	.130	-.079				4
5	-.023	-.032	-.134	-.183	-.049	-.202					.080	.189	.053	-.114	-.040					5
6	-.020	.063	-.068	-.166							.058	.121	-.127	-.108						6
7	-.016	-.055	-.205	-.155	-.175						.182	-.082	-.125							7
8		-.206	-.185								.001	-.073	-.127							8
9	-.121	-.202	-.187								.006	-.086								9
10	-.089	.249									-.058									10
11	-.180																			11
								$\alpha = 06^\circ$			$\delta = -30^\circ$									
1	.321	.153	.156	.115	.225			.290			.211	.237	.242	.888	-.361	-.374	-.380	-.373		1
2	-.065	-.216	-.316	-.118	.639	.627					.148		.168	.199	-.235	-.375	-.406			2
3	-.048	-.084	-.087	-.237	.471	.613	.173				.145	.130	.299	.038	-.180	-.391	-.392			3
4	-.031	-.078	-.054	-.152	.581	.490	.229				.122	.115	.188	-.111	-.195	-.372				4
5	-.068	-.075	-.217	-.195	.498	.153					.127	.280	.104	-.114	-.288					5
6	-.051	.014	-.204	-.152							.131	.181	-.089	-.119						6
7	-.056	-.105	-.251	-.137	.067						.285	-.005	-.093							7
8		-.255	-.201								.051	-.020	-.095							8
9	-.152	-.279	-.140								.031	-.047								9
10	-.110	.265									-.014									10
11	-.207																			11
								$\alpha = 06^\circ$			$\delta = -20^\circ$									
1	.319	.148	.153	.113	.306			.040			.207	.234	.240	.883	-.267	-.305	-.308	-.335		1
2	-.069	-.218	-.317	-.118	.299	.371					.143		.163	.200	-.137	-.260	-.341			2
3	-.048	-.085	-.088	-.235	.217	.343	-.012				.141	.125	.295	.047	-.094	-.266	-.338			3
4	-.032	-.079	-.057	-.153	.291	.266	.011				.121	.113	.189	-.105	-.111	-.218				4
5	-.070	-.078	-.218	-.208	.274	-.006					.122	.276	.105	-.109	-.212					5
6	-.052	.010	-.206	-.175							.122	.177	-.083	-.117						6
7	-.057	-.106	-.254	-.160	-.069						.278	-.011	-.089							7
8		-.260	-.204								.049	-.019	-.095							8
9	-.155	-.279	-.199								.031	-.040								9
10	-.115	.262									-.013									10
11	-.209																			11

Table 14 Continued

Pressure Coefficients on Delta Wing with Control

Configuration F1 M = 1.61 R = 4.2×10^6

Orif	Upper Surface at Station 1	2	3	4	5	6	7	8	9	Lower Surface at Station 1	2	3	4	5	6	7	8	9	Orif
								$\alpha = 06^\circ$		$\delta = -10^\circ$									
1	.321	.152	.154	.117	.292			-.221											1
2	-.065	-.214	.314	-.113	-.043	.078				.209	.238	.241	.879	.000	-.060	-.057	-.209		2
3	-.045	-.083	-.086	-.239	.014	.060	-.192			.143		.166	.210	-.002	.010	-.145			3
4	-.031	-.078	-.053	-.149	.100	.066	-.193			.146	.127	.296	.048	.030	.020	-.151			4
5	-.067	-.075	-.216	-.205	.057	-.180				.122	.116	.197	-.102	.025	-.114				5
6	-.050	.014	-.206	-.184						.126	.279	.108	-.101	-.107					6
7	-.055	-.103	-.254	-.171	-.189					.121	.183	-.082	-.105						7
8		-.257	-.201							.281	-.007	-.086							8
9	-.152	-.278	-.200							.057	-.017	-.089							9
10	-.115	.264								.036	-.036								10
11	-.206									-.009									11
								$\alpha = 06^\circ$		$\delta = 00^\circ$									
1	.324	.153	.158	.119	.206			-.299									-.049		1
2	-.062	-.209	-.311	-.109	-.054	-.210				.213	.239	.243	.878	.168	.185	.296			2
3	-.042	-.081	-.084	-.234	-.061	-.093	-.303			.147		.167	.213	.110	.253	-.043			3
4	-.028	-.075	-.050	-.147	-.067	-.086	-.280			.151	.129	.300	.043	.136	.224	-.024			4
5	-.066	-.072	-.205	-.205	-.096	-.255				.127	.117	.199	-.108	.218	-.010				5
6	-.046	.018	-.201	-.190						.129	.283	.111	-.098	.024					6
7	-.053	-.100	-.248	-.180	-.229					.124	.187	-.084	-.089						7
8		-.254	-.195							.284	-.007	-.093							8
9	-.148	-.274	-.201							.060	-.015	-.090							9
10	-.115	.268								.041	-.039								10
11	-.201									-.007									11
								$\alpha = 06^\circ$		$\delta = 10^\circ$									
1	.319	.148	.154	.114	.168			-.341									.148		1
2	-.067	-.216	-.317	-.111	-.249	-.311				.206	.233	.239	.875	.381	.396	.486			2
3	-.048	-.087	-.088	-.238	-.127	-.253	-.373			.144		.166	.208	.304	.474	.089			3
4	-.036	-.080	-.057	-.151	-.150	-.276	-.349			.146	.122	.297	.036	.302	.397	.134			4
5	-.071	-.078	-.218	-.210	-.185	-.355				.121	.109	.193	-.112	.415	.122				5
6	-.055	.013	-.206	-.199						.122	.276	.106	-.082	.143					6
7	-.059	-.105	-.255	-.189	-.282					.119	.180	-.088	-.062						7
8		-.259	-.203							.278	-.011	-.098							8
9	-.154	-.279	-.209							.053	-.023	-.093							9
10	-.123	.263								.038	-.044								10
11	-.206									-.013									11
								$\alpha = 06^\circ$		$\delta = 20^\circ$									
1	.315	.146	.149	.109	.048			-.362									.393		1
2	-.066	-.217	-.317	-.112	-.348	-.373				.202	.233	.236	.877	.683	.718	.606			2
3	-.051	-.089	-.090	-.235	-.251	-.344	-.398			.139		.160	.205	.601	.697	.321			3
4	-.037	-.084	-.056	-.151	-.221	-.362	-.378			.144	.118	.296	.034	.671	.524	.388			4
5	-.073	-.079	-.220	-.213	-.260	-.402				.118	.108	.193	-.084	.631	.328				5
6	-.057	.011	-.208	-.204						.121	.273	.101	-.043	.320					6
7	-.061	-.108	-.256	-.193	-.332					.121	.175	-.092	-.004						7
8		-.263	-.206							.275	-.014	-.067							8
9	-.152	-.282	-.216							.052	-.024	-.038							9
10	-.128	.258								.036	-.044								10
11	-.206									-.019									11
								$\alpha = 06^\circ$		$\delta = 30^\circ$									
1	.316	.145	.151	.110	-.139			-.374									.567		1
2	-.069	-.218	-.319	-.112	-.399	-.408				.203	.231	.235	.877	1.105	.892	.730			2
3	-.050	-.089	-.093	-.239	-.326	-.380	-.398			.139		.158	.201	.994	.874	.633			3
4	-.038	-.084	-.061	-.152	-.332	-.391	-.385			.146	.114	.294	.059	.966	.598	.578			4
5	-.072	-.082	-.226	-.217	-.344	-.403				.117	.106	.191	-.035	.832	.561				5
6	-.061	.011	-.212	-.205						.123	.274	.101	-.014	.602					6
7	-.058	-.108	-.257	-.189	-.324					.122	.176	-.040	.036						7
8		-.263	-.208							.276	-.015	-.022							8
9	-.155	-.283	-.218							.050	-.025	-.005							9
10	-.129	.259								.038	.014								10
11	-.208									-.019									11

Table 14 Continued

Pressure Coefficients on Delta Wing with Control

Configuration F1 M = 1.61 R = 4.2×10^6

Orif.	Upper Surface at Station 1	2	3	4	5	6	7	8	9		Lower Surface at Station 1	2	3	4	5	6	7	8	9	Orif.
								$\alpha = 09^\circ$			$\delta = 00^\circ$									
1	.284	.072	.065	.022	.142			-.255			.288	.316	.318	1.059	.201	.250	.408	.047		1
2	-.143	-.352	-.408	-.264	-.167	-.240					.207		.243	.305	.143	.366	.015			2
3	-.078	-.135	-.160	-.425	-.101	-.183	-.307				.212	.190	.422	.105	.257	.318	.048			3
4	-.066	-.123	-.093	-.210	-.110	-.131	-.291				.181	.177	.268	-.066	.307	.065				4
5	-.102	-.121	-.235	-.230	-.129	-.276					.189	.365	.172	-.059	.086					5
6	-.090	-.027	-.291	-.202							.300	.309	-.032	-.042						6
7	-.093	-.152	-.376	-.195	-.246						.354	.052	-.009							7
8		-.286	-.369								.097	.023	-.027							8
9	-.176	-.299	-.201								.076	-.001								9
10	-.144	.290									.026									10
11	-.222																			11
								$\alpha = 12^\circ$			$\delta = -30^\circ$									
1	.246	.009	-.031	-.040	.279			.082			.350	.382	.394	1.206	-.286	-.254	-.282	-.328		1
2	-.263	-.424	-.454	-.425	.449	.377					.267		.311	.362	-.071	-.273	-.324			2
3	-.114	-.214	-.380	-.441	.220	.383	.026				.256	.258	.516	.181	-.097	-.279	-.338			3
4	-.105	-.192	-.153	-.305	.268	.358	.042				.248	.242	.334	-.008	-.129	-.258				4
5	-.138	-.169	-.272	-.257	.342	.011					.243	.437	.251	.013	-.232					5
6	-.125	-.092	-.334	-.210							.466	.370	.063	.054						6
7	-.125	-.163	-.408	-.093	-.051						.412	.088	.035							7
8		-.303	-.352								.122	.061	.023							8
9	-.195	-.323	-.232								.094	.042								9
10	-.160	.285									.067									10
11	-.241																			11
								$\alpha = 12^\circ$			$\delta = -20^\circ$									
1	.245	.010	-.030	-.044	.296			-.165			.349	.381	.391	1.198	-.152	-.094	-.133	-.231		1
2	-.266	-.425	-.454	-.422	.118	.090					.266		.307	.362	-.019	-.045	-.181			2
3	-.117	-.214	-.378	-.446	-.056	.117	-.134				.256	.257	.512	.193	.011	-.034	-.183			3
4	-.108	-.192	-.156	-.302	.099	.144	-.133				.244	.239	.336	-.002	-.025	-.156				4
5	-.142	-.168	-.273	-.264	.115	-.129					.242	.431	.253	.013	-.150					5
6	-.125	-.093	-.338	-.224							.458	.370	.067	.054						6
7	-.130	-.164	-.408	-.113	-.173						.398	.089	.041							7
8		-.303	-.400								.122	.065	.026							8
9	-.195	-.323	-.246								.096	.047								9
10	-.166	.283									.068									10
11	-.241																			11
								$\alpha = 12^\circ$			$\delta = -10^\circ$									
1	.249	.017	-.027	-.047	.156			-.351			.350	.382	.390	1.192	.155	.226	.271	.027		1
2	-.261	-.423	-.454	-.419	-.261	-.260					.267		.306	.369	.133	.230	.036			2
3	-.113	-.210	-.378	-.445	-.230	-.208	-.317				.258	.257	.516	.193	.220	.181	.013			3
4	-.105	-.191	-.156	-.306	-.096	-.102	-.296				.248	.239	.345	-.010	.176	.036				4
5	-.134	-.167	-.274	-.268	-.105	-.268					.243	.437	.257	.014	.001					5
6	-.121	-.091	-.340	-.230							.462	.373	.066	.059						6
7	-.126	-.163	-.410	-.124	-.277						.402	.093	.040							7
8		-.301	-.400								.131	.067	.026							8
9	-.192	-.320	-.249								.105	.049								9
10	-.165	.284									.073									10
11	-.239																			11
								$\alpha = 12^\circ$			$\delta = 00^\circ$									
1	.234	.019	-.028	-.044	.097			-.320			.352	.383	.388	1.192	.229	.466	.460	.143		1
2	-.253	-.414	-.449	-.419	-.296	-.332					.270		.302	.371	.184	.443	.086			2
3	-.109	-.207	-.379	-.445	-.165	-.255	-.371				.260	.260	.519	.175	.395	.364	.121			3
4	-.098	-.190	-.157	-.309	-.170	-.230	-.354				.250	.244	.348	-.019	.369	.110				4
5	-.134	-.163	-.270	-.271	-.177	-.345					.247	.440	.257	.018	.128					5
6	-.122	-.086	-.339	-.233							.468	.377	.059	.100						6
7	-.119	-.161	-.407	-.110	-.287						.408	.092	.031							7
8		-.303	-.394								.136	.068	.019							8
9	-.186	-.320	-.242								.110	.048								9
10	-.162	.282									.076									10
11	-.235																			11

Table 14 Concluded

Pressure Coefficients on Delta Wing with Control

Configuration F1 M = 1.61 R = 4.2×10^6

Orif	Upper Surface at Station 1	2	3	4	5	6	7	8	9		Lower Surface at Station 1	2	3	4	5	6	7	8	9	Orif
								$\alpha = 12^\circ$			$\delta = 10^\circ$									
1	.251	.015	-.032	-.049	.082			-.358			.349	.379	.385	1.190	.454	.663	.569	.358		1
2	-.261	-.424	-.457	-.421	-.378	-.394					.268		.301	.369	.407	.636	.279			2
3	-.113	-.211	-.382	-.453	-.302	-.360	-.405				.259	.256	.516	.170	.636	.486	.342			3
4	-.105	-.192	-.160	-.311	-.223	-.366	-.392				.247	.239	.345	-.014	.561	.294				4
5	-.138	-.170	-.274	-.276	-.248	-.408					.245	.437	.253	.065	.280					5
6	-.122	-.090	-.342	-.230							.466	.373	.058	.140						6
7	-.127	-.165	-.411	-.100	-.334						.405	.088	.039							7
8		-.303	-.350								.131	.063	.059							8
9	-.192	-.324	-.234								.104	.045								9
10	-.168	.280									.069									10
11	-.242																			11
								$\alpha = 12^\circ$			$\delta = 20^\circ$									
1	.249	.013	-.032	-.049	-.078			-.362			.350	.379	.387	1.192	.772	.837	.675	.529		1
2	-.263	-.427	-.458	-.424	-.417	-.422					.267		.300	.368	.782	.805	.586			2
3	-.112	-.212	-.382	-.451	-.369	-.399	-.398				.257	.254	.516	.184	.850	.552	.541			3
4	-.105	-.192	-.162	-.312	-.281	-.386	-.383				.245	.237	.343	.051	.760	.551				4
5	-.137	-.168	-.275	-.272	-.344	-.397					.247	.435	.249	.121	.547					5
6	-.122	-.091	-.344	-.194							.465	.373	.085	.212						6
7	-.128	-.164	-.413	-.086	-.328						.404	.088	.099							7
8		-.304	-.249								.130	.067	.085							8
9	-.190	-.324	-.224								.104	.088								9
10	-.170	.281									.071									10
11	-.241																			11
								$\alpha = 12^\circ$			$\delta = 30^\circ$									
1	.246	.012	-.033	-.049	-.212			-.358			.347	.379	.386	1.194	1.236	.969	.870	.684		1
2	-.258	-.426	-.457	-.423	-.420	-.410					.268		.300	.367	1.123	1.068	.885			2
3	-.121	-.215	-.385	-.438	-.385	-.394	-.387				.255	.253	.515	.303	1.091	.870	.760			3
4	-.108	-.195	-.159	-.324	-.341	-.385	-.377				.247	.234	.340	.117	.922	.755				4
5	-.139	-.170	-.282	-.243	-.368	-.387					.240	.436	.354	.239	.796					5
6	-.124	-.090	-.344	-.172							.464	.379	.167	.261						6
7	-.128	-.158	-.411	-.076	-.345						.403	.140	.162							7
8		-.305	-.225								.129	.159	.173							8
9	-.191	-.326	-.206								.138	.147								9
10	-.168	.281									.146									10
11	-.233																			11
								$\alpha = 15^\circ$			$\delta = 00^\circ$									
1	.202	-.067	-.172	-.068	.073			-.241			.424	.453	.460	1.332	.179	.576	.535	.253		1
2	-.376	-.448	-.436	-.425	-.237	-.241					.334		.382	.498	.195	.558	.216			2
3	-.150	-.352	-.406	-.416	-.218	-.217	-.295				.322	.326	.645	.397	.553	.454	.267			3
4	-.141	-.308	-.335	-.431	-.164	-.245	-.274				.314	.440	.557	.134	.472	.220				4
5	-.172	-.150	-.409	-.445	-.175	-.330					.343	.596	.414	.134	.225					5
6	-.159	-.076	-.427	-.297							.588	.456	.146	.135						6
7	-.163	-.198	-.419	-.259	-.254						.476	.151	.131							7
8		-.334	-.410								.181	.139	.120							8
9	-.210	-.357	-.243								.151	.125								9
10	-.197	.298									.132									10
11	-.256																			11

Table 15

Pressure Coefficients on Delta Wing with Control

Configuration F2 M = 1.61 R = 4.2×10^6

Orif	Upper Surface at Station 1	2	3	4	5	6	7	8	9	Lower Surface at Station 1	2	3	4	5	6	7	8	9	Orif
								α = 00°		δ = 00°									
1	.343	.304	.300	.300	.309			-.283									-.109		1
2	.062	.040	.035	.027	.010	-.035				.069	.051	.030	.029	.166	.121	.133			2
3	.031	.016	.012	.005	.008	-.036	-.239			.030		.002	-.005	.109	.092	-.111			3
4	.040	.007	-.007	.009	-.006	-.032	-.229			.032	.007	-.018	-.005	.089	.060	-.100			4
5	.027	.007	-.011	-.148	-.016	-.172				.004	-.003	-.027	-.156	.032	-.064				5
6	.019	.058	.014	-.147						.020	.032	.014	-.147	-.063					6
7	.009	.016	-.144	-.154	-.166					.004	.022	-.142	-.182						7
8		-.139	-.140							.014	-.138	-.136							8
9	-.125	-.137	-.142							-.133	-.132	-.138							9
10	-.067	.238								-.071	-.142								10
11	-.130									-.135									11
								α = 00°		δ = 10°									
1	.344	.306	.300	.301	.278			-.297									-.121		1
2	.063	.041	.036	.030	.005	-.068				.068	.051	.030	.029	.160	.141	.154			2
3	.031	.017	.013	-.060	-.002	-.051	-.255			.029		.002	.056	.098	.104	-.120			3
4	.040	.007	-.005	-.044	-.024	-.051	-.240			.033	.008	-.019	.029	.081	.070	-.108			4
5	.028	.007	-.025	-.132	-.032	-.194				.003	-.002	-.027	-.170	.034	-.072				5
6	.018	.060	-.031	-.131						.019	.031	.062	-.162	-.042					6
7	.010	.023	-.178	-.139	-.177					.001	.016	-.101	-.182						7
8		-.145	-.174							.012	-.123	-.101							8
9	-.121	-.156	-.170							-.134	-.104	-.120							9
10	-.063	.238								-.072	-.112								10
11	-.126									-.134									11
								α = 00°		δ = 20°									
1	.342	.305	.299	.302	.231			-.317									.000		1
2	.062	.041	.037	.032	-.075	-.154				.067	.050	.030	.028	.329	.276	.325			2
3	.030	.017	.014	.237	-.042	-.140	-.295			.028		.002	.099	.231	.279	-.030			3
4	.040	.008	-.005	-.199	-.078	-.165	-.283			.034	.007	-.019	.034	.239	.198	.003			4
5	.028	.007	.023	-.177	-.105	-.238				.002	-.003	-.032	-.218	.102	.032				5
6	.017	.062	-.044	-.129						.019	.027	.134	-.162	.116					6
7	.008	.056	-.228	-.131	-.218					-.002	.012	-.049	-.181						7
8		-.134	-.240							.009	-.114	-.054							8
9	-.115	-.157	-.238							-.136	-.060	-.100							9
10	-.043	.238								-.071	-.065								10
11	-.103									-.125									11
								α = 00°		δ = 30°									
1	.342	.305	.299	.301	.160			-.328									.003		1
2	.062	.040	.036	.032	-.168	-.214				.067	.048	.030	.027	.605	.555	.504			2
3	.031	.015	.013	.635	-.092	-.206	-.321			.027		.002	.096	.419	.502	.141			3
4	.040	.007	-.006	-.350	-.132	-.240	-.310			.034	.005	-.020	-.098	.470	.388	.206			4
5	.027	.007	.127	-.372	-.180	-.290				.002	-.005	-.033	-.238	.208	.200				5
6	.017	.062	-.031	-.164						.019	.024	.213	-.153	.283					6
7	.009	.117	-.259	-.125	-.254					-.002	.010	.011	-.178						7
8		-.106	-.293							.008	-.054	-.021							8
9	-.071	-.152	-.309							-.136	-.002	-.075							9
10	.017	.238								-.055	-.011								10
11	-.047									-.013									11
								α = 03°		δ = 00°									
1	.343		.224	.199	.131			-.354									-.041		1
2	-.002	-.070	-.116	-.175	-.213	-.270				.140	.149	.153	.156	.256	.217	.227			2
3	-.015	-.044	-.042	-.067	-.171	-.226	-.349			.085		.086	.062	.191	.172	-.063			3
4	-.002	-.038	-.070	-.081	-.175	-.205	-.337			.083	.060	.054	.092	.150	.125	-.054			4
5	-.024	-.041	-.101	-.214	-.162	-.308				.059	.056	.032	-.089	.133	-.042				5
6	-.024	.011	-.038	-.210						.075	.091	.069	-.083	-.061					6
7	-.023	-.028	-.184	-.210	-.242					.051	.072	-.097	-.085						7
8		-.171	-.179							.066	-.098	-.088							8
9	-.160	-.170	-.191							-.094	-.092	-.084							9
10	-.099	.248								-.040	-.100								10
11	-.152									-.099									11

Table 15 Continued

Pressure Coefficients on Delta Wing with Control

Configuration F2 M = 1.61 R = 4.2×10^6

Orif	Upper Surface at Station 1	2	3	4	5	6	7	8	9		Lower Surface at Station 1	2	3	4	5	6	7	8	9	Orif
								α = 06°			δ = -30°									
1	.315	.135	.142	.105	.240			-.023										-.235		1
2	-.076	-.232	-.325	-.339	.667	.282					.206	.238	.238	.238	-.099	-.145	-.135			2
3	-.054	-.093	-.099	-.092	.323	.150	-.078				.142		.162	.557	-.002	-.172	-.243			3
4	-.040	-.087	-.112	-.234	.185	.142	-.050				.139	.115	.117	-.206	-.064	-.161	-.260			4
5	-.071	-.085	-.088	-.283	-.044	.009					.112	.108	.288	-.210	-.159	-.215				5
6	-.064	-.041	.052	-.267							.125	.156	.075	-.007	-.262					6
7	-.062	-.057	-.146	-.208	.077						.108	.195	-.160	.008						7
8		-.123	-.124								.125	-.042	-.171							8
9	-.190	-.117	-.161								-.023	-.079	-.185							9
10	-.084	.264									.039	-.110								10
11	-.071										-.003									11
								α = 06°			δ = -20°									
1	.315	.136	.144	.107	.313			-.263										-.156		1
2	-.075	-.230	-.325	-.337	.230	-.015					.206	.238	.237	.237	.080	.005	.001			2
3	-.053	-.092	-.098	-.177	-.034	-.105	-.273				.142		.161	.198	.104	-.020	-.150			3
4	-.039	-.085	-.110	-.168	-.189	-.121	-.266				.139	.114	.117	-.055	.048	.002	-.163			4
5	-.069	-.085	-.077	-.284	-.121	-.174					.112	.109	.151	-.043	-.031	-.124				5
6	-.063	-.039	-.010	-.239							.127	.154	.074	.009	-.183					6
7	-.060	-.051	-.183	-.246	-.091						.105	.146	-.116	-.001						7
8		-.156	-.153								.123	-.063	-.134							8
9	-.188	-.153	-.182								-.042	-.078	-.138							9
10	-.104	.265									.006	-.094								10
11	-.128										-.043									11
								α = 06°			δ = -10°									
1	.315	.136	.145	.107	.284			-.361										-.035		1
2	-.075	-.229	-.323	-.336	-.124	-.234					.206	.239	.236	.237	.267	.182	.181			2
3	-.053	-.092	-.098	-.193	-.254	-.268	-.365				.142		.160	.127	.218	.154	-.041			3
4	-.040	-.085	-.110	-.134	-.241	-.263	-.359				.141	.113	.116	.102	.164	.112	-.049			4
5	-.068	-.084	-.082	-.278	-.149	-.265					.111	.110	.092	-.007	.104	-.032				5
6	-.064	-.036	-.070	-.250							.127	.156	.099	.003	-.088					6
7	-.061	-.046	-.200	-.261	-.207						.103	.126	-.092	-.011						7
8		-.177	-.181								.121	-.062	-.094							8
9	-.186	-.186	-.200								-.044	-.064	-.058							9
10	-.110	.264									-.003	-.081								10
11	-.145										-.056									11
								α = 06°			δ = 00°									
1	.316	.137	.146	.108	.165			-.354										-.026		1
2	-.073	-.221	-.317	-.333	-.191	-.255					.205	.238	.237	.235	.287	.250	.259			2
3	-.052	-.090	-.096	-.156	-.162	-.246	-.351				.142		.161	.129	.213	.198	-.048			3
4	-.040	-.083	-.108	-.108	-.141	-.247	-.344				.141	.111	.117	.181	.170	.154	-.036			4
5	-.060	-.083	-.096	-.256	-.124	-.258					.112	.110	.100	-.019	.132	-.020				5
6	-.061	-.035	-.083	-.251							.128	.152	.131	-.015	-.036					6
7	-.060	-.068	-.215	-.250	-.226						.103	.127	-.050	-.023						7
8		-.202	-.209								.118	-.052	-.036							8
9	-.188	-.201	-.218								-.052	-.050	-.032							9
10	-.129	.267									-.002	-.059								10
11	-.174										-.057									11
								α = 06°			δ = 10°									
1	.317	.137	.146	.108	.168			-.362										.030		1
2	-.073	-.225	-.323	-.335	-.241	-.293					.206	.239	.237	.235	.361	.362	.342			2
3	-.052	-.090	-.096	-.317	-.209	-.284	-.366				.142		.160	.220	.322	.293	-.006			3
4	-.039	-.083	-.108	-.172	-.166	-.288	-.358				.144	.111	.116	.230	.241	.237	.027			4
5	-.066	-.083	-.102	-.225	-.138	-.292					.113	.110	.059	-.064	.208	.047				5
6	-.064	-.032	-.161	-.218							.129	.151	.201	-.028	.072					6
7	-.060	-.040	-.244	-.218	-.239						.103	.108	.017	-.032						7
8		-.199	-.245								.117	-.043	.009							8
9	-.169	-.227	-.246								-.055	-.011	-.027							9
10	-.103	.263									-.010	-.011								10
11	-.151										-.067									11

Table 15 Continued

Pressure Coefficients on Delta Wing with Control

Configuration F2 M = 1.61 R = 4.2×10^6

Orif	Upper Surface at Station 1	2	3	4	5	6	7	8	9		Lower Surface at Station 1	2	3	4	5	6	7	8	9	Orif
								α = 06°			δ = 20°									
1	.315	.136	.145	.108	.160			-.356												1
2	-.071	-.217	-.310	-.315	-.286	-.319					.205	.235	.235	.235	.533	.620	.528	.259		2
3	-.051	-.088	.095	.234	-.258	-.313	-.367				.141		.158	.099	.472	.558	.188			3
4	-.039	-.081	.054	-.319	-.204	-.323	-.357				.143	.109	.115	.297	.665	.448	.296			4
5	-.066	-.081	-.042	-.333	-.188	-.332					.112	.109	.057	-.078	.403	.287				5
6	-.063	.010	-.169	-.211							.127	.148	.280	-.042	.369					6
7	-.058	-.009	-.282	-.170	-.271						.101	.106	.099	-.017						7
8		-.191	.315								.114	-.022	.048							8
9	-.112	-.218	-.302								-.053	.053	-.005							9
10	-.058	.263									-.008	.053								10
11	-.119										-.050									11
								α = 06°			δ = 30°									
1	.315	.136	.145	.107	.073			-.371												1
2	-.073	-.227	-.323	-.321	-.343	-.362					.203	.238	.235	.234	.874	.888	.688	.515		2
3	-.054	-.092	-.097	.255	-.308	-.358	-.391				.140		.158	.116	.742	.853	.559			3
4	-.041	-.086	.001	-.369	-.279	-.371	-.381				.144	.109	.115	.279	.914	.617	.570			4
5	-.068	-.085	.087	-.331	-.257	-.368					.111	.109	.059	-.068	.643	.573				5
6	-.066	.128	-.207	-.291							.126	.149	.353	-.018	.640					6
7	-.062	.028	-.323	-.268	-.317						.100	.129	.135	-.019						7
8		-.194	.288								.113	.076	.086							8
9	-.012	-.233	-.278								-.053	.109	.044							9
10	-.019	.263									.034	.086								10
11	-.068										.067									11
								α = 09°			δ = 00°									
1	.277		.056	.018	-.029			-.334												1
2	-.186	-.401	-.423	-.417	-.248	-.290					.277	.313	.304	.312	.417	.396	.394	.106		2
3	-.098	-.158	-.164	-.388	-.233	-.311	-.365				.192		.232	.198	.353	.348	.060			3
4	-.084	-.138	-.158	-.178	-.294	-.352	-.359				.197	.191	.174	.268	.318	.288	.091			4
5	-.117	-.128	-.260	-.286	-.308	-.395					.176	.164	.159	.042	.296	.062				5
6	-.101	-.088	-.127	-.275							.165	.209	.182	.049	.032					6
7	-.112	-.107	-.245	-.269	-.307						.134	.173	-.013	.036						7
8		-.229	-.238								.166	-.016	.011							8
9	-.220	-.234	-.244								-.012	-.010	.022							9
10	-.148	.270									.021	-.019								10
11	-.194										-.018									11
								α = 12°			δ = -30°									
1	.236		-.054	-.091	.267			-.226												1
2	-.279	-.443	-.471	-.479	.570	.045					.357	.385	.398	.384	.114	.001	.035	-.136		2
3	-.130	-.215	-.354	-.490	.253	-.094	-.263				.270		.308	.505	.144	-.013	-.124			3
4	-.121	-.188	-.233	-.414	-.029	-.178	-.271				.260	.259	.258	-.091	.046	.028	-.146			4
5	-.148	-.194	-.176	-.400	-.371	-.328					.244	.240	.384	.002	-.081	-.128				5
6	-.135	-.154	-.084	-.308							.250	.298	.206	.146	-.227					6
7	-.142	-.116	-.260	-.241	-.280						.211	.293	-.031	.140						7
8		-.183	-.292								.271	.039	-.064							8
9	-.252	-.181	-.303								.091	.017	-.084							9
10	-.127	.299									.101	.002								10
11	-.108										.067									11
								α = 12°			δ = -20°									
1	.239		-.051	-.086	.288			-.330												1
2	-.279	-.441	-.468	-.475	.131	-.199					.358	.386	.398	.386	.360	.228	.244	.022		2
3	-.129	-.211	-.350	-.475	-.118	-.266	-.349				.269		.309	.311	.300	.209	.014			3
4	-.119	-.186	-.231	-.380	-.363	-.307	-.344				.260	.260	.259	.123	.218	.165	.000			4
5	-.147	-.190	-.172	-.360	-.352	-.380					.245	.242	.276	.115	.105	-.005				5
6	-.133	-.149	-.127	-.312							.251	.300	.225	.158	-.100					6
7	-.141	-.111	-.272	-.202	-.312						.211	.263	-.007	.134						7
8		-.208	-.300								.267	.036	-.035							8
9	-.246	-.211	-.308								.070	.029	.034							9
10	-.149	.301									.082	.021								10
11	-.146										.049									11

Table 15 Continued

Pressure Coefficients on Delta Wing with Control

Configuration F2 M = 1.61 R = 4.2×10^6

Orif	Upper Surface at Station 1	2	3	4	5	6	7	8	9		Lower Surface at Station 1	2	3	4	5	6	7	8	9	Orif
								α = 12°			δ = -10°									
1	.238		-.052	-.091	.120			-.332										.221		1
2	-.275	-.441	-.460	-.470	-.259	-.336					.358	.385	.395	.383	.548	.467	.447			2
3	-.126	-.212	-.345	-.443	-.333	-.346	-.368				.271		.307	.377	.474	.418	.190			3
4	-.120	-.186	-.238	-.323	-.382	-.365	-.357				.261	.259	.260	.283	.415	.337	.177			4
5	-.148	-.189	-.190	-.328	-.357	-.388					.244	.239	.264	.135	.336	.176				5
6	-.132	-.149	-.176	-.301							.250	.305	.223	.153	.088					6
7	-.141	-.103	-.280	-.201	-.335						.210	.261	-.005	.128						7
8		-.233	-.292								.268	.045	.017							8
9	-.244	-.240	-.285								.063	.032	.083							9
10	-.154	.300									.087	.021								10
11	-.170										.055									11
								α = 12°			δ = 00°									
1	.240	-.004	-.051	-.087	.063			-.210										-.019		1
2	-.273	-.407	-.450	-.464	-.124	-.160					.357	.385	.399	.385	.330	.325	.307			2
3	-.125	-.213	-.310	-.428	-.129	-.181	-.262				.269		.306	.291	.267	.284	-.034			3
4	-.119	-.190	-.271	-.331	-.199	-.231	-.246				.259	.259	.259	.379	.241	.231	.008			4
5	-.146	-.188	-.223	-.315	-.214	-.277					.247	.241	.254	.132	.226	-.007				5
6	-.134	-.154	-.168	-.297							.249	.293	.267	.142	-.013					6
7	-.140	-.132	-.271	-.203	-.170						.211	.258	.051	.123						7
8		-.265	-.264								.252	.047	.086							8
9	-.244	-.260	-.269								.047	.052	.097							9
10	-.169	.300									.081	.046								10
11	-.206										.052									11
								α = 12°			δ = 10°									
1	.239	-.005	-.050	-.088	.071			-.258										.158		1
2	-.276	-.430	-.464	-.471	-.230	-.244					.357	.386	.399	.385	.575	.497	.460			2
3	-.125	-.213	-.325	-.455	-.220	-.256	-.304				.270		.307	.373	.504	.467	.108			3
4	-.119	-.191	-.186	-.310	-.277	-.297	-.290				.259	.258	.257	.424	.423	.391	.186			4
5	-.144	-.189	-.233	-.292	-.281	-.326					.248	.242	.203	.101	.401	.159				5
6	-.133	-.113	-.268	-.287							.250	.292	.345	.129	.168					6
7	-.140	-.102	-.325	-.268	-.233						.212	.237	.124	.111						7
8		-.263	-.295								.249	.071	.118							8
9	-.212	-.293	-.264								.040	.103	.105							9
10	-.125	.299									.068	.105								10
11	-.169										.056									11
								α = 12°			δ = 20°									
1	.239	-.003	-.051	-.088	.053			-.282										.406		1
2	-.277	-.435	-.454	-.429	-.284	-.286					.357	.385	.399	.385	.785	.761	.594			2
3	-.125	-.210	-.323	.199	-.269	-.295	-.325				.270		.307	.143	.671	.739	.431			3
4	-.119	-.186	-.170	-.401	-.317	-.329	-.313				.260	.258	.258	.509	.800	.549	.464			4
5	-.144	-.172	-.115	-.333	-.319	-.348					.247	.241	.202	.078	.601	.446				5
6	-.133	-.063	-.254	-.219							.250	.290	.442	.114	.507					6
7	-.127	-.092	-.361	-.141	-.278						.216	.238	.198	.117						7
8		-.240	-.301								.247	.126	.158							8
9	-.128	-.279	-.153								.040	.170	.110							9
10	-.081	.299									.080	.158								10
11	-.129										.108									11
								α = 12°			δ = 30°									
1	.239	-.003	-.051	-.087	-.033			-.298										.579		1
2	-.276	-.437	-.374	-.321	-.317	-.313					.356	.385	.397	.384	1.047	1.025	.800			2
3	-.125	-.193	-.259	.464	-.302	-.320	-.341				.270		.304	.140	.882	1.013	.732			3
4	-.118	-.145	-.020	-.372	-.342	-.351	-.330				.259	.256	.256	.554	1.055	.790	.654			4
5	-.143	-.129	-.121	-.264	-.345	-.364					.246	.242	.201	.106	.849	.700				5
6	-.113	.073	-.284	-.227							.251	.290	.500	.193	.827					6
7	-.053	-.025	-.299	-.190	-.312						.221	.312	.266	.157						7
8		-.205	-.271								.246	.201	.211							8
9	-.057	-.201	-.252								.046	.235	.176							9
10	-.047	.301									.198	.212								10
11	-.120										.240									11

Table 15 Concluded

Pressure Coefficients on Delta Wing with Control

Configuration F2 M = 1.61 R = 4.2×10^6

Orif	Upper Surface at Station										Lower Surface at Station									Orif
	1	2	3	4	5	6	7	8	9		1	2	3	4	5	6	7	8	9	
								α = 15°			δ = 00°									
1	.207		-.161	-.168	-.028			-.299										.115		1
2	-.361	-.450	-.451	-.406	-.128	-.217					.419	.446	.448	.433	.448	.429	.416			2
3	-.148	-.311	-.403	-.364	-.140	-.259	-.337				.329		.365	.385	.396	.407	.076			3
4	-.138	-.291	-.389	-.328	-.254	-.321	-.333				.316	.323	.349	.514	.374	.337	.126			4
5	-.174	-.153	-.310	-.371	-.337	-.390					.309	.329	.377	.232	.354	.077				5
6	-.159	-.145	-.365	-.334							.322	.398	.365	.250	.066					6
7	-.165	-.146	-.333	-.275	-.316						.307	.365	.131	.217						7
8		-.262	-.291								.357	.121	.170							8
9	-.262	-.275	-.295								.127	.124	.181							9
10	-.183	.319									.149	.123								10
11	-.210										.131									11

Table 16

Pressure Coefficients on Delta Wing with Control

Configuration F3 M = 1.61 R = 4.2 x 10^6

Orif	Upper Surface at Station 1	2	3	4	5	6	7	8	9		Lower Surface at Station 1	2	3	4	5	6	7	8	9	Orif
								α = 00°			δ = -15°									
1	.347	.312	.304	.304	.373			.031										-.260		1
2	.062	.037	.031	.423	.332	.404					.077	.063	.046	.510	-.189	-.263	-.251			2
3	.029	.013	.009	-.006	.302	.278	-.029				.036		.011	-.014	-.086	-.238	-.298			3
4	.041	.009	.093	.064	.331	.211	-.057				.032	.015	.092	-.109	-.077	-.233	-.310			4
5	.022	.005	-.032	-.121	.051	-.028					.009	.006	-.026	-.185	-.092	-.265				5
6	.022	.125	-.038	-.153							.026	.109	-.045	-.192	-.210					6
7	.009	.018	-.066	-.157	-.095						.017	.035	-.195	-.180						7
8		-.167	-.077								.079	-.162	-.185							8
9	-.077	-.153	-.093								-.076	-.155	-.185							9
10	-.040	.251									-.047	-.160								10
11	-.137										-.138									11
								α = 00°			δ = 00°									
1	.344	.308	.302	.299	.380			-.293										-.196		1
2	.058	.035	.027	.424	.023	-.048					.071	.057	.042	.504	.118	.067	.077			2
3	.023	.009	.006	-.009	-.009	-.071	-.240				.034		.007	-.020	.031	.009	-.173			3
4	.034	.007	.086	.002	-.022	-.039	-.235				.026	.010	.083	-.001	.039	-.003	-.164			4
5	.026	.003	-.035	-.139	-.016	-.193					.006	.002	-.034	-.141	.016	-.151				5
6	.014	.117	-.047	-.150							.022	.102	-.029	-.143	-.128					6
7	.006	.017	-.156	-.154	-.161						.007	.030	-.144	-.136						7
8		-.172	-.142								.072	-.167	-.129							8
9	-.079	-.164	-.153								-.079	-.156	-.135							9
10	-.047	.244									-.047	-.138								10
11	-.139										-.143									11
								α = 00°			δ = 10°									
1	.344	.310	.302	.303	.306			-.341										-.072		1
2	.061	.038	.030	.432	-.036						.072	.058	.043	.506	.277		.261			2
3	.027	.011	.009	.000	-.073		-.324				.034		.008	-.016	.164		-.085			3
4	.039	.009	.083	-.070	-.126		-.315				.038	.009	.085	.046	.192		-.073			4
5	.028	.005	-.032	-.163	-.066						.007	.003	-.029	-.129	.097					5
6	.015	.122	-.041	-.180							.023	.104	-.018	-.133	-.077					6
7	.006	.021	-.186	-.172	-.188						.007	.031	-.088	-.143						7
8		-.166	-.178								.071	-.166	-.085							8
9	-.075	-.160	-.187								-.077	-.151	-.096							9
10	-.049	.245									-.048	-.101								10
11	-.136										-.143									11
								α = 00°			δ = 20°									
1	.346	.311	.302	.302	.244			-.364										.135		1
2	.064	.039	.032	.439	-.232	-.323					.074	.059	.041	.505	.519	.507	.447			2
3	.031	.013	.011	.002	-.166	-.290	-.377				.033		.007	-.015	.397	.426	.070			3
4	.043	.010	.084	-.154	-.135	-.294	-.369				.040	.013	.083	.071	.440	.245	.108			4
5	.030	.005	-.032	-.227	-.141	-.335					.009	.003	-.034	-.125	.044	.047				5
6	.017	.123	-.049	-.225							.025	.102	.055	-.182	.007					6
7	.010	.023	-.217	-.215	-.244						.008	.033	-.040	-.168						7
8		-.162	-.224								.069	-.164	-.054							8
9	-.072	-.164	-.227								-.076	-.097	-.072							9
10	-.048	.248									-.044	-.043								10
11	-.131										-.145									11
								α = 00°			δ = 30°									
1	.343	.307	.300	.298	.038			-.365										.425		1
2	.060	.035	.027	.442	-.337	-.370					.069	.055	.036	.498	.851	.731	.641			2
3	.026	.011	.009	-.002	-.213	-.364	-.406				.028		.003	-.018	.785	.644	.350			3
4	.038	.007	.081	-.385	-.275	-.385	-.393				.036	.005	.079	.089	.708	.480	.392			4
5	.024	.003	-.034	-.404	-.324	-.400					.003	-.001	-.037	-.147	.207	.295				5
6	.013	.123	-.065	-.304							.020	.098	.172	-.273	.176					6
7	.006	.021	-.254	-.220	-.336						.002	.027	-.007	-.304						7
8		-.166	-.271								.063	-.168	-.025							8
9	-.076	-.179	-.282								-.082	-.002	-.077							9
10	-.057	.244									-.050	.006								10
11	-.134										-.138									11

Table 16 Continued

Pressure Coefficients on Delta Wing with Control

Configuration F3 M = 1.61 R = 4.2×10^6

Orif	Upper Surface at Station 1	2	3	4	5	6	7	8	9	Lower Surface at Station 1	2	3	4	5	6	7	8	9	Orif
	α = 03°									δ = 00°									
1	.338	.233	.226	.196	.316			-.378									-.086		1
2	-.009	-.070	-.123	-.014	-.083	-.200				.139	.147	.152	.708	.142	.152	.212			2
3	-.020	-.046	-.046	-.117	-.072	-.129	-.349			.086		.085	.094	.089	.172	-.096			3
4	-.007	-.039	-.009	-.073	-.057	-.156	-.343			.081	.060	.184	.067	.094	.093	-.088			4
5	-.030	-.044	-.159	-.180	-.107	-.283				.063	.051	.071	-.091	.108	-.079				5
6	-.027	.056	-.122	-.188						.075	.188	.008	-.088	-.077					6
7	-.023	-.064	-.185	-.192	-.246					.053	.085	-.094	-.084						7
8		-.216	-.176							.172	-.046	-.086							8
9	-.125	-.227	-.185							-.022	-.099	-.091							9
10	-.104	.251								-.016	-.089								10
11	-.191									-.098									11
	α = 06°									δ = -30°									
1	.318	.167	.150	.109	.292			.146									-.343		1
2	-.068	-.216	-.318	-.127	.592	.576				.208	.233	.238	.894	-.287	-.292	-.285			2
3	-.050	-.089	-.090	-.233	.411	.501	.039			.143		.162	.160	-.090	-.311	-.352			3
4	-.033	-.083	-.054	-.061	.544	.240	.018			.140	.124	.296	-.213	-.123	-.303	-.368			4
5	-.070	-.082	-.224	-.242	.038	-.012				.123	.109	.154	-.286	-.170	-.284				5
6	-.053	.009	-.050	-.247						.119	.273	.001	-.281	-.268					6
7	-.059	-.109	-.069	-.269	-.105					.126	.156	-.181	-.265						7
8		-.265	-.111							.262	-.044	-.207							8
9	-.156	-.170	-.151							.033	-.072	-.193							9
10	-.116	.264								.006	-.099								10
11	-.211									-.049									11
	α = 06°									δ = -20°									
1	.318	.168	.152	.111	.359			-.080									-.290		1
2	-.069	-.216	-.316	-.121	.244	.324				.205	.230	.235	.892	-.200	-.198	-.179			2
3	-.050	-.090	-.094	-.232	.180	.289	-.122			.139		.160	.150	-.031	-.189	-.283			3
4	-.034	-.084	-.056	-.066	.264	.103	-.151			.137	.121	.290	-.094	-.028	-.157	-.298			4
5	-.073	-.083	-.224	-.212	-.098	-.172				.121	.110	.123	-.170	-.069	-.198				5
6	-.057	.010	-.164	-.206						.118	.265	.022	-.164	-.204					6
7	-.060	-.110	-.117	-.207	-.187					.114	.143	-.162	-.164						7
8		-.262	-.128							.252	-.043	-.157							8
9	-.156	-.287	-.154							.020	-.065	-.137							9
10	-.119	.265								.002	-.092								10
11	-.211									-.051									11
	α = 06°									δ = -10°									
1	.318	.167	.150	.113	.349			-.280									-.163		1
2	-.076	-.216	-.316	-.118	-.083	.024				.203	.228	.234	.887	.012	-.004	.055			2
3	-.052	-.092	-.093	-.226	-.027	.008	-.267			.138		.159	.152	.005	.077	-.141			3
4	-.037	-.085	-.057	-.084	.056	-.067	-.289			.136	.121	.290	.022	.083	.033	-.145			4
5	-.072	-.084	-.226	-.201	-.157	-.275				.122	.106	.127	-.101	.043	-.115				5
6	-.057	.011	-.203	-.193						.118	.266	.039	-.106	-.126					6
7	-.063	-.110	-.160	-.192	-.233					.111	.141	-.124	-.108						7
8		-.265	-.166							.251	-.045	-.104							8
9	-.159	-.289	-.175							.022	-.060	-.093							9
10	-.123	.263								.003	-.080								10
11	-.213									-.052									11
	α = 06°									δ = 00°									
1	.315	.164	.150	.113	.275			-.252									-.093		1
2	-.073	-.217	-.314	-.114	-.034	-.151				.200	.229	.233	.888	.125	.199	.243			2
3	-.052	-.091	-.092	-.230	-.042	-.064	-.270			.135		.158	.153	.078	.216	-.093			3
4	-.038	-.086	-.056	-.125	-.047	-.118	-.254			.136	.119	.288	.116	.205	.136	-.060			4
5	-.079	-.084	-.217	-.222	-.142	-.258				.119	.103	.126	-.055	.134	-.056				5
6	-.059	.009	-.204	-.229						.116	.265	.052	-.046	-.053					6
7	-.063	-.109	-.188	-.225	-.207					.110	.137	-.056	-.044						7
8		-.266	-.197							.250	-.044	-.052							8
9	-.158	-.287	-.205							.020	-.059	-.042							9
10	-.127	.263								.002	-.048								10
11	-.211									-.056									11

Table 16 Continued

Pressure Coefficients on Delta Wing with Control

Configuration F3 M = 1.61 R = 4.2×10^6

Orif	Upper Surface at Station 1	2	3	4	5	6	7	8	9		Lower Surface at Station 1	2	3	4	5	6	7	8	9	Orif
								α = 06°			δ = 10°									
1	.314	.165	.150	.111	.226			-.328			.201	.228	.233	.885	.374	.500	.436	.112		1
2	-.074	-.216	-.314	-.115	-.234	-.294					.135		.157	.149	.289	.409	.063			2
3	-.051	-.090	-.093	-.227	-.121	-.244	-.357				.137	.116	.287	.166	.406	.315	.097			3
4	-.039	-.086	-.056	-.167	-.156	-.286	-.340				.121	.106	.127	-.049	.239	.071				4
5	-.075	-.085	-.225	-.241	-.177	-.361					.115	.263	.094	-.057	.032					5
6	-.057	.011	-.203	-.241							.109	.138	.001	-.120						6
7	-.062	-.110	-.212	-.226	-.241						.245	-.046	-.005							7
8		-.265	-.222								.019	-.033	-.012							8
9	-.159	-.287	-.231								.005	.017								9
10	-.129	.263									-.058									10
11	-.211																			11
								α = 06°			δ = 20°									
1	.315	.166	.149	.112	.093			-.352			.202	.227	.232	.885	.696	.700	.604	.373		1
2	-.073	-.216	-.315	-.113	-.341	-.368					.132		.154	.149	.616	.600	.278			2
3	-.053	-.090	-.093	-.225	-.266	-.346	-.381				.140	.117	.287	.208	.674	.497	.352			3
4	-.039	-.086	-.057	-.233	-.262	-.365	-.368				.122	.104	.125	-.042	.377	.296				4
5	-.077	-.084	-.225	-.309	-.233	-.396					.117	.262	.209	-.157	.173					5
6	-.059	.013	-.203	-.277							.108	.136	.055	-.203						6
7	-.063	-.108	-.235	-.243	-.312						.246	-.042	.047							7
8		-.262	-.250								.018	.069	.015							8
9	-.158	-.284	-.261								.006	.071								9
10	-.131	.261									-.056									10
11	-.212																			11
								α = 06°			δ = 30°									
1	.319	.169	.151	.112	-.102			-.355			.203	.228	.234	.885	1.082	.872	.716	.573		1
2	-.072	-.215	-.313	-.111	-.386	-.405					.137		.158	.152	.962	.830	.619			2
3	-.052	-.090	-.092	-.224	-.332	-.386	-.393				.143	.117	.287	.282	.904	.621	.591			3
4	-.037	-.085	-.056	-.311	-.303	-.402	-.376				.122	.106	.126	-.093	.581	.595				4
5	-.075	-.081	-.221	-.438	-.337	-.399					.118	.262	.335	-.232	.418					5
6	-.060	.016	-.202	-.376							.112	.138	.118	-.251						6
7	-.063	-.105	-.261	-.311	-.358						.244	.044	.047							7
8		-.262	-.279								.021	.147	.030							8
9	-.156	-.286	-.300								.013	.113								9
10	-.130	.262									.018									10
11	-.195																			11
								α = 09°			δ = 00°									
1	.277	.092	.056	.013	.182			-.352			.286	.316	.318	1.071	.208	.441	.376	.073		1
2	-.163	-.369	-.419	-.275	-.258	-.335					.206		.242	.226	.152	.362	.024			2
3	-.093	-.141	-.189	-.418	-.181	-.266	-.385				.207	.185	.411	.182	.362	.276	.061			3
4	-.079	-.130	-.103	-.206	-.152	-.222	-.375				.179	.175	.193	-.006	.225	.040				4
5	-.108	-.129	-.259	-.288	-.254	-.384					.193	.342	.110	.007	.010					5
6	-.101	-.035	-.292	-.258							.283	.241	.007	.018						6
7	-.101	-.156	-.352	-.260	-.324						.321	.010	.053							7
8		-.288	-.230								.057	-.014	.047							8
9	-.185	-.307	-.214								.043	.012								9
10	-.163	.294									-.021									10
11	-.232																			11
								α = 12°			δ = -30°									
1	.239	.017	-.048	-.056	.286			.042			.356	.384	.392	1.209	-.232	-.229	-.251	-.351		1
2	-.275	-.439	-.467	-.437	.430	.405					.267		.308	.344	-.075	-.266	-.331			2
3	-.125	-.219	-.400	-.451	.278	.394	-.032				.259	.259	.492	-.175	-.099	-.101	-.343			3
4	-.115	-.190	-.177	-.298	.317	.239	-.085				.245	.241	.307	-.250	-.162	-.253				4
5	-.149	-.184	-.299	-.331	.053	-.196					.250	.425	.134	-.196	-.265					5
6	-.132	-.102	-.343	-.312							.448	.332	-.064	-.160						6
7	-.138	-.171	-.178	-.306	-.353						.386	.046	-.090							7
8		-.312	-.180								.101	.005	-.097							8
9	-.199	-.335	-.223								.067	-.027								9
10	-.167	.304									.024									10
11	-.246																			11

Table 16 Continued

Pressure Coefficients on Delta Wing with Control

Configuration F3 M = 1.61 R = 4.2×10^6

Orif	Upper Surface at Station 1	2	3	4	5	6	7	8	9		Lower Surface at Station 1	2	3	4	5	6	7	8	9	Orif
								$\alpha = 12^\circ$			$\delta = -20^\circ$									
1	.242	.022	-.044	-.055	.358			-.218			.358	.387	.394	1.208	-.177	-.003	-.025	-.251		1
2	-.273	-.434	-.464	-.439	.100	.080					.270		.308	.285	.051	.015	-.193			2
3	-.119	-.213	-.393	-.456	-.060	.106	-.181				.265	.263	.489	-.006	.027	-.009	-.178			3
4	-.110	-.187	-.176	-.276	.078	.094	-.220				.249	.244	.261	-.109	-.019	-.169				4
5	-.141	-.180	-.288	-.281	-.138	-.291					.254	.408	.142	-.094	-.182					5
6	-.126	-.097	-.341	-.273							.436	.323	-.034	-.067						6
7	-.132	-.170	-.294	-.233	-.345						.368	.043	-.028							7
8		-.308	-.192								.092	.013	-.038							8
9	-.196	-.328	-.201								.067	-.016								9
10	-.168	.306									.022									10
11	-.244																			11
								$\alpha = 12^\circ$			$\delta = -10^\circ$									
1	.243	.020	-.045	-.053	.264			-.386			.359	.387	.395	1.203	.051	.254	.238	-.042		1
2	-.271	-.435	-.468	-.438	-.247	-.264					.271		.308	.287	.077	.203	-.047			2
3	-.123	-.215	-.393	-.460	-.196	-.202	-.340				.264	.262	.492	.127	.193	.131	-.041			3
4	-.110	-.188	-.178	-.305	-.086	-.103	-.323				.248	.245	.262	-.019	.141	-.037				4
5	-.141	-.179	-.287	-.294	-.297	-.358					.253	.409	.149	-.013	-.064					5
6	-.125	-.097	-.340	-.238							.434	.321	.023	.012						6
7	-.133	-.172	-.373	-.193	-.349						.368	.046	.024							7
8		-.308	-.234								.092	.017	.015							8
9	-.197	-.329	-.208								.067	.000								9
10	-.174	.308									.020									10
11	-.246																			11
								$\alpha = 12^\circ$			$\delta = 00^\circ$									
1	.237	.017	-.048	-.056	.165			-.240			.353	.381	.388	1.200	.150	.438	.369	.040		1
2	-.273	-.421	-.457	-.439	-.168	-.197					.263		.304	.285	.128	.344	.008			2
3	-.125	-.218	-.395	-.451	-.100	-.147	-.290				.258	.256	.489	.232	.379	.286	.055			3
4	-.116	-.193	-.178	-.335	-.119	-.188	-.281				.242	.237	.258	.044	.233	.050				4
5	-.148	-.186	-.278	-.350	-.262	-.320					.247	.403	.177	.069	.053					5
6	-.133	-.101	-.341	-.326							.428	.316	.087	.117						6
7	-.140	-.179	-.408	-.282	-.262						.362	.036	.080							7
8		-.312	-.266								.086	.028	.072							8
9	-.202	-.332	-.200								.063	.048								9
10	-.180	.303									.015									10
11	-.251																			11
								$\alpha = 12^\circ$			$\delta = 10^\circ$									
1	.237	.016	-.047	-.056	.147			-.287			.355	.382	.393	1.204	.377	.628	.525	.261		1
2	-.267	-.434	-.464	-.439	-.264	-.283					.269		.305	.286	.333	.517	.224			2
3	-.126	-.217	-.393	-.463	-.205	-.254	-.325				.259	.258	.491	.306	.580	.449	.266			3
4	-.115	-.193	-.178	-.292	-.190	-.286	-.318				.245	.238	.263	.067	.362	.222				4
5	-.146	-.183	-.285	-.348	-.299	-.358					.249	.404	.247	.077	.140					5
6	-.132	-.102	-.340	-.300							.432	.318	.156	.021						6
7	-.127	-.179	-.410	-.303	-.288						.364	.040	.146							7
8		-.315	-.288								.089	.093	.116							8
9	-.199	-.330	-.188								.067	.106								9
10	-.182	.306									.015									10
11	-.246																			11
								$\alpha = 12^\circ$			$\delta = 20^\circ$									
1	.236	.015	-.047	-.057	-.039			-.316			.353	.380	.390	1.199	.797	.815	.677	.527		1
2	-.274	-.442	-.470	-.441	-.356	-.358					.266		.303	.283	.813	.777	.582			2
3	-.128	-.220	-.390	-.480	-.318	-.346	-.370				.258	.257	.489	.406	.838	.556	.551			3
4	-.118	-.192	-.183	-.297	-.325	-.369	-.360				.244	.238	.259	.040	.559	.568				4
5	-.140	-.185	-.303	-.316	-.373	-.385					.248	.404	.409	-.046	.303					5
6	-.132	-.101	-.336	-.320							.428	.318	.236	-.027						6
7	-.139	-.183	-.409	-.311	-.354						.360	.089	.157							7
8		-.320	-.300								.085	.184	.130							8
9	-.202	-.339	-.191								.069	.158								9
10	-.186	.303									.060									10
11	-.246																			11

Table 16 Concluded

Pressure Coefficients on Delta Wing with Control

Configuration F3 M = 1.61 R = 4.2 × 10^6

Orif	Upper Surface at Station 1	2	3	4	5	6	7	8	9	Lower Surface at Station 1	2	3	4	5	6	7	8	9	Orif
								α = 12°		δ = 30°									
1	.234	.014	-.051	-.057	-.201	-.400		-.346		.348	.378	.390	1.197	1.194	.956	.859	.683		1
2	-.277	-.440	-.473	-.443	-.402	-.392	-.394			.262		.301	.282	1.124	1.071	.869			2
3	-.127	-.221	-.393	-.486	-.375	-.406	-.381			.258	.253	.487	.428	1.068	.821	.748			3
4	-.119	-.196	-.183	-.348	-.389	-.408				.243	.234	.264	.076	.717	.725				4
5	-.149	-.187	-.307	-.399	-.418					.244	.401	.511	-.076	.469					5
6	-.134	-.103	-.335	-.381						.427	.380	.249	-.155						6
7	-.142	-.183	-.411	-.322	-.387					.361	.216	.254							7
8		-.321	-.379							.104	.222	.210							8
9	-.205	-.339	-.220							.171	.208								9
10	-.183	.303								.226									10
11	-.234																		11
								α = 15°		δ = 00°									
1	.201	-.052	-.163	-.059	.117	-.249		-.265		.417	.447	.451	1.314	.163	.563	.475	.208		1
2	-.365	-.452	-.446	-.432	-.225	-.233	-.309			.325		.373	.370	.178	.451	.169			2
3	-.148	-.323	-.401	-.412	-.190	-.269	-.310			.316	.320	.582	.363	.463	.399	.219			3
4	-.138	-.293	-.325	-.348	-.174	-.374				.307	.366	.382	.131	.327	.169				4
5	-.174	-.150	-.403	-.393	-.258					.323	.540	.338	.167	.164					5
6	-.158	-.080	-.422	-.366						.534	.372	.145	.153						6
7	-.166	-.197	-.258	-.314	-.354					.415	.081	.131							7
8		-.335	-.231							.127	.100	.118							8
9	-.215	-.354	-.300							.102	.106								9
10	-.195	.296								.059									10
11	-.262																		11
								α = -06°		δ = 00°									
1	.281	.267	.103	.141	.353			-.119									-.327		1
2	.193	.206	.230	.907	.123	.147				-.064	-.259	-.312	-.138	-.143	-.210	-.242			2
3	.132	.140	.174	.188	.091	.224	-.108			-.047		-.104	-.218	-.067	-.094	-.327			3
4	.129	.109	.289	.122	.192	.152	-.133			-.054	-.077	-.044	-.130	-.056	-.171	-.293			4
5	.135	.114	.118	-.047	.134	-.075				-.071	-.086	-.220	-.231	-.145	-.259				5
6	.117	.282	.040	-.056						-.057	-.005	-.203	-.225	-.223					6
7	.134	.139	-.070	-.054	-.080					-.069	-.106	-.180	-.217						7
8		-.046	-.060							-.035	-.261	-.187							8
9	.021	-.068	-.049							-.163	-.281	-.196							9
10	.038	.329								-.126	-.199								10
11	-.050									-.230									11
								α = -06°		δ = 20°									
1	.280	.265	.097	.133	.261			-.300									-.050		1
2	.195	.204	.226	.906	-.208	-.204				-.068	-.263	-.319	-.149	.273	.339	.276			2
3	.134	.139	.170	.185	-.058	-.190	-.303			-.051		-.110	-.228	.189	.300	-.098			3
4	.127	.109	.287	-.076	-.035	-.182	-.312			-.057	-.080	-.051	-.069	.281	.056	-.085			4
5	.134	.111	.116	-.161	-.089	-.226				-.076	-.091	-.229	-.216	-.087	-.146				5
6	.114	.282	.025	-.155						-.060	-.018	-.117	-.212	-.163					6
7	.135	.138	-.170	-.158	-.208					-.072	-.110	-.119	-.209						7
8		-.045	-.167							-.042	-.267	-.130							8
9	.020	-.075	-.150							-.167	-.284	-.150							9
10	.032	.324								-.128	-.099								10
11	-.048									-.238									11

Table 17

Pressure Coefficients on Delta Wing with Control

Configuration G M = 1.61 R = 4.2×10^6

Orif	Upper Surface at Station 1	2	3	4	5	6	7	8	9		Lower Surface at Station 1	2	3	4	5	6	7	8	9	Orif
								α = 00°			δ = 00°									
1	.385	.350	.277	.272	.210		.284	-.239										-.276		1
2	.055	.027	.020	.018	.052	.064					.083		.048		.033	.006	.013			2
3	.017	.011		.015	.036	.033	-.169				.042	.028	.013		.014	.001	-.212			3
4	.027	-.009	-.018	-.023	.027	.018	-.188				.042		.000	-.015	.006	-.011	-.219			4
5	.008	-.002	-.003	-.130		-.157					.006	.017	-.015	-.135	-.003	-.189				5
6	.005	.047	.007	-.130							.025	.038	.020	-.140	-.143					6
7	.031	.025	-.149	-.131	-.117						.025	.021	-.137	-.139	-.148					7
8	.006	-.146	-.155								.019	-.130	-.138							8
9	-.145	-.146	-.157								-.136	-.127	-.135							9
10	-.079	-.146									-.066	-.129								10
11	-.142										-.129									11
								α = 00°			δ = 10°									
1	.383	.354	.282	.275	-.217		.186	-.343										-.007		1
2	.055	.033	.025	.025	-.070	-.254					.084		.048		.237	.286	.325			2
3	.020	.016		.048	-.051	-.229	-.325				.039	.031	.015		.161	.222	-.070			3
4	.026	-.002	-.011	-.128	-.047	-.189	-.335				.046		-.005	.046	.197	.188	-.058			4
5	.010	-.001	.020	-.199		-.224					.000	.012	-.027	-.129	.091	-.071				5
6	.004	.052	-.037	-.205							.022	.036	.082	-.161	-.080					6
7	.036	.045	-.203	-.199	-.195						.022	.019	-.080	-.161	-.081					7
8	.007	-.143	-.200								.016	-.127	-.086							8
9	-.136	-.159	-.204								-.149	-.092	-.088							9
10	-.072	-.174									-.070	-.091								10
11	-.136										-.140									11
								α = 00°			δ = 20°									
1	.385	.353	.286	.273	-.325		.045	-.377										.217		1
2	.053	.036	.026	.025	-.310	-.343					.073		.038		.584	.563	.538			2
3	.018	.015		.400	-.125	-.350	-.383				.022	.021	.004		.375	.482	.084			3
4	.029	-.002	-.008	-.292	-.126	-.339	-.388				.043		-.021	-.019	.455	.385	.133			4
5	.012	.002	.169	-.304		-.338					-.001	.001	-.042	-.268	.261	.054				5
6	.003	.054	-.016	-.338							.019	.027	.125	-.270	.022					6
7	.035	.094	-.233	-.340	-.272						.017	.006	-.030	-.229	.058					7
8	.007	-.123	-.271								.006	-.143	-.032							8
9	-.133	-.154	-.275								-.167	-.057	-.061							9
10	-.038	-.177									-.070	-.045								10
11	-.098										-.145									11
								α = 00°			δ = 30°									
1	.384	.354	.286	.275	-.389		-.102	-.369										.523		1
2	.055	.029	.024	.021	-.396	-.394					.070		.045		.918	.847	.729			2
3	.022	.014		.314	-.240	-.403	-.372				.034	.021	.007		.730	.788	.367			3
4	.030	-.002	-.012	-.477	-.255	-.382	-.308				.049		-.016	-.171	.805	.634	.449			4
5	.010	.002	.284	-.406		-.372					-.003	.006	-.042	-.330	.646	.351				5
6	.001	.056	.088	-.460							.017	.033	.224	-.276	.204					6
7	.039	.175	-.223	-.442	-.316						.019	.003	.057	-.331	.299					7
8	.016	-.069	-.303								.002	-.089	.005							8
9	-.053	-.130	-.340								-.154	.027	-.034							9
10	.038	-.170									-.051	.023								10
11	-.013										-.019									11
								α = 06°			δ = 00°									
1	.327	.087	.124	-.010	-.353		.085	-.393										-.059		1
2	-.094	-.290	-.344	-.382	-.353	-.387					.206		.247		.271	.257	.271			2
3	-.077	-.093		-.218	-.332	-.364	-.398				.142	.152	.154		.247	.201	-.006			3
4	-.059	-.106	-.132	-.165	-.239	-.348	-.398				.163		.120	.123	.193	.180	-.040			4
5	-.097	-.103	-.108	-.209		-.281					.107	.121	.098	-.040	.153	-.015				5
6	-.085	-.052	-.102	-.228							.128	.140	.134	-.041	-.019					6
7	-.052	-.052	-.227	-.236	-.270						.110	.126	-.049	-.040	-.001					7
8	-.076	-.216	-.233								.110	-.064	-.056							8
9	-.218	-.214	-.237								-.064	-.051	-.056							9
10	-.155	-.221									.001	-.051								10
11	-.195										-.085									11

Table 17 Continued

Pressure Coefficients on Delta Wing with Control

Configuration G M = 1.61 R = 4.2×10^6

Orif	Upper Surface at Station 1	2	3	4	5	6	7	8	9	Lower Surface at Station 1	2	3	4	5	6	7	8	9	Orif
								α = 06°				δ = 10°							
1	.332	.098	.138	-.002	-.366		.014	-.402		.208		.247		.336	.565	.504	.161		1
2	-.089	-.285	-.335	-.349	-.389	-.414				.138	.153	.153		.322	.455	.066			2
3	-.070	-.081		-.067	-.349	-.403	-.405			.151		.112	.270	.600	.359	.106			3
4	-.054	-.097	-.121	-.193	-.192	-.387	-.406			.108	.125	.064	.008	.325	.066				4
5	-.086	-.095	-.047	-.233		-.370				.121	.136	.189	-.021	.080					5
6	-.074	-.037	-.150	-.236						.106	.108	.025	-.110	.068					6
7	-.042	-.002	-.286	-.224	-.262					.107	-.072	.014							7
8	-.073	-.192	-.304							-.083	-.017	.014							8
9	-.178	-.220	-.267							-.003	.002								9
10	-.113	-.245								-.105									10
11	-.151																		11
								α = 06°				δ = 20°							
1	.328	.096	.143	-.005	-.389		-.080	-.381		.206		.249		.580	.793	.675	.453		1
2	-.088	-.274	-.339	-.305	-.412	-.428				.138	.155	.153		.661	.765	.281			2
3	-.071	-.080		.205	-.368	-.412	-.402			.151		.112	.305	.634	.584	.373			3
4	-.053	-.096	-.067	-.389	-.253	-.406	-.402			.109	.116	.049	-.002	.683	.294				4
5	-.083	-.094	.121	-.372		-.392				.114	.142	.258	-.124	.281					5
6	-.078	.019	-.146	-.281						.114	.109	.105	-.181	.251					6
7	-.047	.044	-.268	-.347	-.301					.101	-.081	.064							7
8	-.032	-.178	-.327							-.083	.045	.084							8
9	-.091	-.218	-.340							.014	.055								9
10	-.044	-.244								-.100									10
11	-.115																		11
								α = 06°				δ = 30°							
1	.326	.093	.132	-.006	-.410		-.162	-.388									.658		1
2	-.093	-.287	-.340	-.219	-.436	-.427				.199		.241		1.022	1.019	.860			2
3	-.075	-.090		.100	-.387	-.427	-.407			.142	.161	.155		.935	1.019	.693			3
4	-.059	-.098	-.041	-.426	-.317	-.408	-.407			.159		.117	.282	.814	.777	.615			4
5	-.092	-.100	.221	-.258		-.392				.112	.128	.064	.027	.983	.618				5
6	-.087	.138	-.086	-.352						.127	.140	.328	-.192	.630					6
7	-.050	.112	-.317	-.298	-.348					.114	.104	.142	-.214	.540					7
8	.137	-.166	-.322							.108	.017	.178							8
9	.033	-.186	-.331							-.074	.106	.142							9
10	.019	-.206								.034	.121								10
11	-.065									.006									11
								α = 12°				δ = 00°							
1	.207	-.098	-.022	-.180	-.290		-.005	-.356									.063		1
2	-.290	-.425	-.448	-.470	-.300	-.312				.348		.394		.422	.400	.399			2
3	-.136	-.187		-.444	-.246	-.311	-.368			.279	.282	.293		.363	.348	-.003			3
4	-.114	-.179	-.229	-.355	-.282	-.284	-.356			.286		.254	.276	.326	.286	.037			4
5	-.164	-.183	-.191	-.348		-.322				.242	.244	.213	.058	.283	.012				5
6	-.142	-.163	-.177	-.363						.242	.277	.250	.058	.063					6
7	-.131	-.112	-.273	-.333	-.247					.202	.229	.037	.059	.014					7
8	-.137	-.271	-.275							.235	.018	.037							8
9	-.264	-.266	-.277							.031	.043	.050							9
10	-.196	-.267								.056	.043								10
11	-.218									.032									11
								α = 12°				δ = 10°							
1	.202	-.103	-.025	-.184	-.340		-.093	-.361									.366		1
2	-.287	-.436	-.469	-.462	-.349	-.363				.349		.400		.604	.691	.603			2
3	-.137	-.185		-.083	-.321	-.351	-.361			.277	.286	.281		.557	.624	.187			3
4	-.116	-.179	-.167	-.371	-.348	-.340	-.361			.292		.253	.461	.684	.523	.269			4
5	-.162	-.188	-.083	-.318		-.353				.247	.254	.186	.160	.535	.214				5
6	-.146	-.078	-.244	-.281						.246	.281	.333	.119	.244					6
7	-.128	-.067	-.361	-.245	-.312					.199	.227	.140	-.021	.195					7
8	-.110	-.247	-.308							.229	.020	.121							8
9	-.208	-.289	-.250							.023	.078	.137							9
10	-.121	-.312								.057	.117								10
11	-.163									-.006									11

Table 17 Continued

Pressure Coefficients on Delta Wing with Control

Configuration G M = 1.61 R = 4.2×10^6

Orif	Upper Surface at Station 1	2	3	4	5	6	7	8	9		Lower Surface at Station 1	2	3	4	5	6	7	8	9	Orif
								$\alpha = 12^\circ$			$\delta = 20^\circ$									
1	.205	-.102	-.024	-.181	-.389		-.175	-.372										.554		1
2	-.294	-.435	-.453	-.266	-.389	-.385					.342		.404		.856	.953	.706			2
3	-.134	-.185		.132	-.364	-.385	-.387				.267	.278	.279		.721	.920	.554			3
4	-.114	-.182	-.133	-.407	-.378	-.371	-.387				.284		.244	.554	.799	.681	.514			4
5	-.160	-.149	-.080	-.281		-.387					.236	.244	.180	.201	.862	.482				5
6	-.141	.016	-.098	-.164							.236	.266	.379	-.001	.487					6
7	-.086	-.034	-.350	-.169	-.357						.204	.214	.204	-.101	.443					7
8	-.013	-.204	-.310								.222	.015	.202							8
9	-.107	-.258	-.234								.007	.135	.204							9
10	-.083	-.274									.083	.142								10
11	-.164										-.022									11
								$\alpha = 12^\circ$			$\delta = 30^\circ$									
1	.204	-.101	-.023	-.157	-.417		-.249	-.355										.719		1
2	-.290	-.430	-.302	-.173	-.395	-.385					.342		.394		1.206	1.182	.962			2
3	-.136	-.170		-.193	-.385	-.385	-.381				.268	.272	.283		1.044	1.193	.876			3
4	-.117	-.145	-.044	-.421	-.385	-.385	-.381				.277		.236	.641	.939	1.000	.701			4
5	-.159	-.123	-.072	-.271		-.372					-.234	.236	.192	.156	1.215	.778				5
6	-.110	.158	-.072	-.328							.234	.262	.437	-.081	.832					6
7	.067	.053	-.308	-.317	-.391						.200	.210	.285	-.122	.664					7
8	.142	-.097	-.338								.214	.067	.285							8
9	-.036	-.192	-.308								.004	.231	.246							9
10	-.068	-.159									.086	.231								10
11	-.113										.038									11
								$\alpha = -06^\circ$			$\delta = 00^\circ$									
1	.292	.363	.151	.146	.325		-.129	-.085										-.336		1
2	.181	.198	.221	.235	.263	.271					-.069		-.302		-.209	-.260	-.260			2
3	.127	.133		.129	.202	.213	-.100				-.050	-.082	-.119		-.190	-.267	-.263			3
4	.128	.100	.108	.120	.169	.171	-.069				-.047		-.105	-.143	-.102	-.202	-.301			4
5	.110	.105	.124	-.043		-.047					-.087	-.082	-.114	-.208	-.118	-.212				5
6	.106	.162	.116	-.045							-.066	-.058	-.085	-.228	-.232					6
7	.129	.122	-.065	-.043	-.052						-.060	-.063	-.218	-.235	-.195					7
8	.108	-.070	-.065								-.061	-.204	-.216							8
9	-.070	-.068	-.068								-.212	-.198	-.216							9
10	-.016	-.066									-.126	-.200								10
11	-.075										-.174									11
								$\alpha = -06^\circ$			$\delta = 10^\circ$									
1	.299	.365	.156	.143	-.050		.205	-.252										-.248		1
2	.183	.199	.224	.237	.106	-.018					-.069		-.302		.167	.008	.031			2
3	.126	.135		.097	.078	.039	-.187				-.043	-.086	-.116		-.045	-.070	-.235			3
4	.125	.103	.110	-.011	.048	.031	-.187				-.043		-.108	-.240	-.152	-.041	-.235			4
5	.112	.106	.124	-.138		-.148					-.083	-.082	-.075	-.250	-.162	-.247				5
6	.101	.169	.085	-.147							-.064	-.065	-.050	-.222	-.231					6
7	.119	.131	-.101	-.151	-.166						-.064	-.037	-.180	-.222	-.228					7
8	.106	-.091	-.118								-.064	-.172	-.204							8
9	-.055	-.083	-.127								-.201	-.174	-.204							9
10	-.006	-.081									-.109	-.166								10
11	-.066										-.136									11
								$\alpha = -06^\circ$			$\delta = 20^\circ$									
1	.291	.366	.150	.144	-.248		.142	-.331										.010		1
2	.194	.197	.222	.238	-.116	-.219					-.075		-.302		.559	.284	.294			2
3	.127	.134		.296	-.025	-.219	-.298				-.040	-.087	-.118		.223	.140	-.082			3
4	.128	.107	.111	-.095	-.082	-.208	-.311				-.049		-.108	-.261	.136	.139	-.090			4
5	.114	.108	.211	-.239		-.208					-.085	-.087	-.095	-.277	-.210	-.186				5
6	.101	.169	.065	-.220							-.068	-.070	.025	-.226	-.190					6
7	.125	.158	-.134	-.228	-.230						-.069	-.054	-.166	-.278	-.194					7
8	.106	-.073	-.153								-.061	-.148	-.189							8
9	-.050	-.096	-.169								-.211	-.130	-.171							9
10	.002	-.104									-.106	-.152								10
11	-.044										-.121									11

Table 17 Concluded

Pressure Coefficients on Delta Wing with Control

Configuration G M = 1.61 R = 4.2×10^6

Orif	Upper Surface at Station 1	2	3	4	5	6	7	8	9		Lower Surface at Station 1	2	3	4	5	6	7	8	9	Orif
								$\alpha = -06^\circ$			$\delta = 30^\circ$									
1	.295	.369	.151	.146	-.337		.019	-.365										.266		1
2	.182	.202	.223	.241	-.316	-.319					-.069		-.301		.902	.578	.579			2
3	.133	.140		.007	-.117	-.339	-.371				-.043	-.084	-.109		.637	.432	.105			3
4	.129	.107	.113	-.320	-.218	-.314	-.369				-.043		-.109	-.212	.579	.358	.157			4
5	.119	.110	.269	-.356		-.314					-.086	-.080	-.094	-.306	-.049	.049				5
6	.103	.174	.146	-.363							-.060	-.064	.074	-.295	-.094					6
7	.126	.236	-.149	-.365	-.301						-.063	-.043	-.104	-.333	-.022					7
8	.112	-.026	-.209								-.063	-.124	-.139							8
9	-.034	-.076	-.235								-.210	-.098	-.160							9
10	.054	-.097									-.086	-.090								10
11	.016										-.061									11
								$\alpha = -12^\circ$			$\delta = 00^\circ$									
1	.165	.257	.009	-.089	.290		-.252	.002										-.389		1
2	.332	.341	.362	.367	.412	.408					-.255		-.442		-.314	-.366	-.349			2
3	.239	.236		.272	.361	.359	.018				-.114	-.164	-.343		-.314	-.376	-.332			3
4	.244	.223	.232	.258	.316	.306	.072				-.114		-.183	-.321	-.303	-.325	-.364			4
5	.221	.222	.252	.066		.071					-.148	-.166	-.180	-.319	-.303	-.342				5
6	.218	.291	.236	.057							-.121	-.166	-.145	-.331	-.317					6
7	.236	.239	.028	.058	.064						-.121	-.121	-.261	-.317	-.283					7
8	.216	.027	.025								-.121	-.249	-.263							8
9	.020	.025	.036								-.251	-.249	-.262							9
10	.068	.028									-.164	-.249								10
11	.016										-.188									11
								$\alpha = -12^\circ$			$\delta = 10^\circ$									
1	.169	.262	.011	-.096	.206		-.070	-.075										-.361		1
2	.323	.337	.367	.376	.243	.191					-.258		-.448		.141	-.165	-.209			2
3	.237	.232		.244	.202	.186	-.083				-.108	-.162	-.351		-.133	-.230	-.324			3
4	.241	.218	.232	.087	.193	.153	-.075				-.108		-.183	-.396	-.338	-.283	-.324			4
5	.223	.223	.259	-.078		-.070					-.146	-.164	-.130	-.342	-.325	-.349				5
6	.218	.295	.219	-.078							-.121	-.164	-.130	-.258	-.301					6
7	.232	.237	-.016	-.091	-.121						-.121	-.093	-.263	-.232	-.294					7
8	.223	.012	-.041								-.121	-.211	-.283							8
9	.035	.009	-.052								-.247	-.217	-.276							9
10	.061	.002									-.137	-.250								10
11	.020										-.137									11
								$\alpha = -12^\circ$			$\delta = 20^\circ$									
1	.160	.259	.007	-.103	-.166		.158	-.329										-.165		1
2	.322	.334	.359	.367	.149	-.155					-.267		-.453		.560	.179	.135			2
3	.236	.235		.310	.064	-.140	-.241				-.124	-.167	-.352		.279	-.005	-.228			3
4	.237	.221	.231	.042	-.059	.058	-.249				-.118		-.193	-.441	.116	-.063	-.228			4
5	.217	.221	.306	-.176		-.182					-.146	-.166	-.151	-.365	-.367	-.329				5
6	.215	.290	.186	-.159							-.125	-.166	-.136	-.310	-.320					6
7	.231	.250	-.032	-.166	-.218						-.126	-.111	-.254	-.286	-.345					7
8	.220	.005	-.064								-.131	-.190	-.282							8
9	.046	-.008	-.083								-.259	-.216	-.273							9
10	.076	-.016									-.131	-.206								10
11	.024										-.120									11
								$\alpha = -12^\circ$			$\delta = 30^\circ$									
1	.161	.261	.009	-.104	-.262		.048	-.343										.054		1
2	.331	.335	.365	.369	-.161	-.248					-.268		-.444		.868	.424	.346			2
3	.241	.240		.415	-.024	-.255	-.313				-.114	-.160	-.356		.593	.240	-.099			3
4	.245	.224	.242	.079	-.155	-.157	-.317				-.114		-.189	-.384	.532	.071	-.075			4
5	.220	.221	.422	-.320		-.246					-.148	-.170	-.140	-.388	-.310	-.276				5
6	.216	.298	.229	-.298							-.127	-.170	-.054	-.373	-.302					6
7	.239	.315	-.063	-.261	-.278						-.127	-.107	-.218	-.365	-.331					7
8	.229	.038	-.088								-.127	-.204	-.254							8
9	.086	.002	-.116								-.233	-.147	-.267							9
10	.130	-.019									-.077	-.175								10
11	.077										-.090									11

Table 18

Pressure Coefficients on Delta Wing with Control

Configuration H M = 1.61 R = 4.2×10^6

Orif	Upper Surface at Station 1	2	3	4	5	6	7	8	9	Lower Surface at Station 1	2	3	4	5	6	7	8	9	Orif
								α = 00°		δ = 00°									
1	.347	.315	.305	.345	.437			-.229									-.252		1
2	.068	.045	.038	.097	.097	.035				.077	.060	.041	.102	.123	.019	.015			2
3	.032	.022	.013	.005	.019	.010	-.198			.035		.010	-.001	.007	.002	-.213			3
4	.039	.019	.010	-.030	.009	-.005	-.203			.031	.014	.002	-.040	-.003	-.020	-.199			4
5	.032	.014	-.030	-.167	-.011	-.173				.009	.006	-.030	-.164	-.017	.160				5
6	.024	.071	.018	-.152						.027	.037	.020	-.138	-.153					6
7	.016	.022	-.144	-.115	-.146					.009	.030	-.138	-.099						7
8		-.133	-.143							.026	-.130	-.132							8
9	-.111	-.137	-.155							-.116	-.125	-.143							9
10	-.054	.249								-.060	-.132								10
11	-.127									-.125									11
								α = 00°		δ = 10°									
1	.354	.317	.309	.345	.328												-.093		1
2	.070	.049	.041	.039	.024	-.126				.079	.062	.043	.039	.347	.218				2
3	.036	.024	.016	-.089	-.013	-.095				.036		.013	.073	.118	.153				3
4	.045	.021	.029	-.066	-.059	-.106				.040	.015	-.010	-.006	.057	.128				4
5	.037	.017	-.045	-.165	-.083	-.204				.014	.007	.005	-.144	.070	.159				5
6	.028	.085	-.018	-.202						.034	.031	.073	-.193	-.049					6
7	.021	.018	-.173	-.188	-.202					.012	.048	-.097	-.091						7
8		-.150	-.173							.026	-.101	-.103							8
9	-.101	-.159	-.177							-.116	-.093	-.115							9
10	-.053	.219								-.049	-.100								10
11	-.125									-.097									11
								α = 00°		δ = 20°									
1	.354	.319	.309	.347	.247			-.332									.136		1
2	.072	.050	.044	.039	-.169	-.237				.079	.061	.040	.037	.576	.477	.463			2
3	.037	.026	.019	-.007	-.062	-.224	-.335			.039		.011	.181	.325	.401	.074			3
4	.048	.020	.033	-.219	-.121	-.259	-.324			.045	.015	-.011	-.115	.265	.324	.115			4
5	.037	.016	-.018	-.250	-.212	-.283				.014	.007	.022	-.237	.184	.181				5
6	.024	.095	-.085	-.211						.032	.027	.144	-.232	.066					6
7	.023	.038	-.236	-.194	-.256					.012	.055	-.052	-.238						7
8		-.148	-.223							.028	-.055	-.079							8
9	-.078	-.174	-.228							-.119	-.047	-.089							9
10	-.035	.214								-.034	-.057								10
11	-.104									-.039									11
								α = 00°		δ = 30°									
1	.349	.316	.308	.345	.094			-.338									.421		1
2	.070	.048	.041	.037	-.297	-.324				.076	.058	.037	.034	.861	.736	.659			2
3	.035	.022	.016	.566	-.152	-.319	-.376			.035		.009	.217	.653	.678	.336			3
4	.047	.017	.041	-.384	-.207	-.349	-.360			.044	.012	-.014	-.237	.695	.548	.411			4
5	.033	.014	.079	-.378	-.312	-.361				.011	.003	.077	-.294	.354	.248				5
6	.020	.151	-.126	-.257						.028	.024	.225	-.302	.260					6
7	.023	.072	-.295	-.228	-.314					.009	.134	-.040	-.313						7
8		-.146	-.313							.019	-.012	-.069							8
9	-.013	-.187	-.307							-.118	-.003	-.101							9
10	.001	.203								.044	-.031								10
11	-.066									.034									11
								α = 03°		δ = 00°									
1	.343	.229	.235	.215	.345			-.368									-.056		1
2	.004	-.059	-.110	-.128	-.053	-.250				.140	.148	.155	.252	.302	.209	.219			2
3	-.012	-.038	-.032	-.058	-.118	-.206	-.348			.087		.090	.081	.182	.156	-.070			3
4	-.002	-.036	-.045	-.092	-.085	-.137	-.322			.084	.060	.076	.037	.146	.107	-.067			4
5	-.019	-.034	-.066	-.206	-.094	-.258				.058	.055	.041	-.112	.095	.169				5
6	-.025	.023	-.036	-.191						.077	.104	.082	-.089	-.060					6
7	-.011	-.030	-.182	-.136	-.248					.057	.081	-.089	-.074						7
8		-.174	-.182							.070	-.091	-.089							8
9	-.150	-.171	-.192							-.075	-.085	-.098							9
10	-.097	.249								-.023	-.087								10
11	-.158									-.092									11

Table 18 Continued

Pressure Coefficients on Delta Wing with Control

Configuration H M = 1.61 R = 4.2×10^6

Orif	Upper Surface at Station 1	2	3	4	5	6	7	8	9		Lower Surface at Station 1	2	3	4	5	6	7	8	9	Orif
								$\alpha = 06^\circ$			$\delta = -30^\circ$									
1	.317	.162	.152	.120	.208			.190										-.347		1
2	-.073	-.222	-.319	-.359	.828	.469					.207	.232	.238	.241	-.263	-.282	-.280			2
3	-.051	-.090	-.094	-.271	.614	.337	.078				.141		.165	.413	-.064	-.324	-.347			3
4	-.036	-.083	-.116	-.230	.392	.260	.080				.141	.124	.119	-.277	-.149	-.270	-.359			4
5	-.072	-.081	.013	-.299	-.050	.117					.120	.110	.195	-.291	-.250	.088				5
6	-.058	-.036	.030	-.364							.121	.200	-.002	-.246	-.222					6
7	-.057	.028	-.136	-.375	-.002						.103	.154	-.179	-.192						7
8		-.106	-.170								.176	-.079	-.191							8
9	-.179	-.127	-.194								.040	-.103	-.195							9
10	-.026	.225									.022	-.108								10
11	-.044										-.043									11
								$\alpha = 06^\circ$			$\delta = -20^\circ$									
1	.318	.167	.156	.124	.347			-.075										-.303		1
2	-.070	-.221	-.314	-.355	.568	.251					.206	.232	.238	.241	-.119	-.181	-.178			2
3	-.049	-.086	-.090	-.310	.282	.108	-.121				.141		.166	.052	.026	-.224	-.276			3
4	-.033	-.081	-.111	-.193	-.042	.037	-.148				.141	.125	.132	-.115	-.054	-.082	-.292			4
5	-.069	-.080	-.024	-.262	-.079	-.060					.123	.111	.092	-.169	-.136	.117				5
6	-.054	-.031	-.028	-.315							.120	.185	.048	-.184	-.237					6
7	-.055	-.006	-.165	-.271	-.143						.102	.125	-.130	-.166						7
8		-.142	-.174								.148	-.078	-.140							8
9	-.178	-.159	-.184								-.006	-.089	-.145							9
10	-.068	.237									.000	-.092								10
11	-.103										-.062									11
								$\alpha = 06^\circ$			$\delta = -10^\circ$									
1	.320	.167	.158	.125	.444			-.291										-.143		1
2	-.069	-.219	-.312	-.348	.343	-.030					.205	.230	.237	.302	.202	.078	.069			2
3	-.049	-.085	-.090	-.294	-.078	-.137	-.295				.140		.163	.079	.169	.079	-.124			3
4	-.033	-.079	-.110	-.157	-.240	-.159	-.305				.142	.124	.167	.001	.109	.041	-.129			4
5	-.069	-.079	-.069	-.227	-.123	-.220					.121	.111	.076	-.096	.025	.151				5
6	-.054	-.027	-.061	-.226							.120	.179	.085	-.129	-.104					6
7	-.056	-.030	-.194	-.214	-.261						.098	.119	-.094	-.131						7
8		-.176	-.192								.137	-.065	-.098							8
9	-.177	-.183	-.206								-.021	-.069	-.101							9
10	-.090	.238									-.006	-.073								10
11	-.139										-.065									11
								$\alpha = 06^\circ$			$\delta = 00^\circ$									
1	.318	.165	.155	.124	.325			-.318										-.114		1
2	-.072	-.225	-.312	-.318	-.048	-.204					.204	.229	.236	.400	.320	.240	.218			2
3	-.049	-.088	-.090	-.131	-.175	-.156	-.314				.135		.161	.137	.189	.178	-.101			3
4	-.035	-.081	-.095	-.148	-.165	-.190	-.306				.142	.120	.152	.093	.146	.136	-.078			4
5	-.073	-.081	-.119	-.209	-.110	-.259					.123	.107	.100	-.085	.128	.184				5
6	-.057	-.020	-.079	-.229							.116	.167	.132	-.055	-.061					6
7	-.057	-.073	-.213	-.165	-.207						.096	.129	-.052	-.057						7
8		-.201	-.213								.131	-.053	-.054							8
9	-.182	-.201	-.221								-.031	-.047	-.066							9
10	-.118	.263									.007	-.047								10
11	-.177										-.061									11
								$\alpha = 06^\circ$			$\delta = 10^\circ$									
1	.317	.169	.158	.126	.247			-.346										.102		1
2	-.068	-.219	-.309	-.309	-.232	-.316					.206	.230	.237	.236	.513	.442	.428			2
3	-.049	-.085	-.089	-.249	-.204	-.286	-.364				.140		.162	.282	.476	.376	.051			3
4	-.034	-.079	-.044	-.137	-.195	-.307	-.350				.145	.121	.117	.140	.383	.311	.095			4
5	-.073	-.079	-.111	-.204	-.162	-.347					.124	.108	.139	-.040	.266	.193				5
6	-.057	.006	-.146	-.226							.120	.147	.204	-.133	.120					6
7	-.058	-.060	-.244	-.205	-.259						.097	.150	.005	.001						7
8		-.211	-.225								.116	-.014	-.014							8
9	-.164	-.243	-.226								-.040	-.005	-.024							9
10	-.106	.233									.015	-.003								10
11	-.161										-.026									11

Table 18 Continued

Pressure Coefficients on Delta Wing with Control

Configuration H M = 1.61 R = 4.2×10^6

Orif	Upper Surface at Station 1	2	3	4	5	6	7	8	9		Lower Surface at Station 1	2	3	4	5	6	7	8	9	Orif
								α = 06°			δ = 20°									
1	.321	.167	.154	.121	.165			-.355			.205	.228	.233	.230	.742	.734	.613	.367		1
2	-.065	-.219	-.313	-.297	-.337	-.372					.139		.158	.406	.620	.660	.287			2
3	-.049	-.088	-.093	-.116	-.289	-.355	-.381				.146	.119	.111	.100	.824	.529	.360			3
4	-.036	-.080	.076	-.325	-.252	-.373	-.370				.125	.106	.116	-.150	.449	.265				4
5	-.071	-.079	-.112	-.304	-.280	-.396					.120	.145	.289	-.212	.279					5
6	-.056	.068	-.185	-.263							.099	.184	.047	-.102						6
7	-.054	-.049	-.321	-.211	-.324						.115	.033	.022							7
8		-.219	-.314								-.042	.048	-.008							8
9	-.106	-.243	-.273								.061	.035								9
10	-.07[illegible]	.236									.030									10
11	-.135																			11
								α = 06°			δ = 30°									
1	.317	.165	.153	.121	.003			-.356			.201	.229	.234	.233	1.002	.962	.733	.600		1
2	-.070	-.220	-.313	-.122	-.384	-.398					.138		.159	.484	.932	.923	.665			2
3	-.051	-.088	-.092	.560	-.337	-.388	-.393				.144	.117	.114	.042	.958	.657	.632			3
4	-.037	-.082	.158	-.371	-.325	-.400	-.381				.123	.106	.282	-.211	.714	.381				4
5	-.071	-.082	-.057	-.304	-.338	-.406					.118	.145	.339	-.194	.544					5
6	-.058	.148	-.219	-.272							.098	.272	.068	-.078						6
7	-.049	-.033	-.342	-.232	-.368						.114	.083	.033							7
8		-.221	-.296								.010	.072	.002							8
9	-.054	-.237	-.246								.141	.056								9
10	-.045	.229									.151									10
11	-.122																			11
								α = 09°			δ = 00°									
1	.278	.096	.062	.023	.259			-.207			.281	.313	.314	.566	.372	.287	.269	-.066		1
2	-.157	-.357	-.409	-.412	-.022	-.174					.198		.241	.212	.263	.233	-.072			2
3	-.088	-.138	-.198	-.366	-.110	-.160	-.265				.207	.187	.232	.159	.207	.193	-.033			3
4	-.076	-.128	-.132	-.233	-.200	-.200	-.254				.178	.173	.174	-.036	.184	.216				4
5	-.109	-.125	-.165	.215	-.216	-.279					.182	.244	.197	-.007	-.025					5
6	-.096	-.075	-.131	-.272							.152	.196	-.006	-.031						6
7	-.099	-.117	-.240	-.187	-.183						.203	-.001	-.011							7
8		-.241	-.244								.024	.007	-.019							8
9	-.209	-.231	-.249								.047	.003								9
10	-.148	.278									-.009									10
11	-.197																			11
								α = 12°			δ = -30°									
1	.242	.016	-.043	-.078	.280			-.111			.372	.386	.398	.390	-.066	-.141	-.112	-.267		1
2	-.274	-.434	-.464	-.480	.790	.269					.270		.309	.423	.060	-.153	-.232			2
3	-.121	-.214	-.346	-.493	.568	.084	-.159				.259	.261	.266	-.152	-.049	-.057	-.250			3
4	-.112	-.191	-.218	-.381	.263	-.046	-.192				.247	.244	.309	-.207	-.160	.131				4
5	-.141	-.183	-.085	.250	-.387	-.253					.253	.371	.162	-.163	-.233					5
6	-.129	-.151	-.131	-.375							.216	.263	-.072	-.135						6
7	-.132	-.018	-.280	-.363	-.315						.329	.019	-.093							7
8		-.183	-.295								.107	.019	-.098							8
9	-.237	-.209	-.297								.075	.006								9
10	-.057	.254									.035									10
11	-.088																			11
								α = 12°			δ = -20°									
1	.241	.016	-.041	-.073	.408			-.281			.375	.388	.401	.393	.179	.013	.032	-.192		1
2	-.274	-.434	-.461	-.476	.568	.059					.271		.314	.288	.179	.003	-.146			2
3	-.120	-.215	-.343	-.484	.287	-.095	-.281				.261	.261	.340	-.010	.057	.073	-.136			3
4	-.111	-.191	-.215	-.349	-.186	-.181	-.300				.246	.244	.246	-.107	-.063	.153				4
5	-.139	-.182	-.119	.262	-.374	-.343					.251	.341	.196	-.112	-.180					5
6	-.129	-.149	-.150	-.333							.215	.249	-.037	-.104						6
7	-.133	-.061	-.288	-.300	-.337						.296	.027	-.049							7
8		-.204	-.300								.086	.031	-.051							8
9	-.237	-.225	-.288								.072	.017								9
10	-.106	.265									.029									10
11	-.125																			11

Table 18 Continued

Pressure Coefficients on Delta Wing with Control

Configuration H M = 1.61 R = 4.2×10^6

Orif	Upper Surface at Station 1	2	3	4	5	6	7	8	9		Lower Surface at Station 1	2	3	4	5	6	7	8	9	Orif
								$\alpha = 12^\circ$			$\delta = -10^\circ$									
1	.241	.019	-.040	-.073	.454			-.383										.019		1
2	-.272	-.433	-.459	-.471	.315	-.237					.375	.387	.399	.532	.396	.286	.268			2
3	-.119	-.212	-.345	-.461	-.206	-.288	-.376				.271		.311	.236	.333	.233	.009			3
4	-.111	-.189	-.212	-.300	-.413	-.315	-.375				.261	.261	.320	.115	.255	.183	.001			4
5	-.138	-.179	-.169	.268	-.377	-.389					.247	.245	.275	-.020	.144	.202				5
6	-.128	-.146	-.166	-.279							.252	.326	.213	-.054	-.121					6
7	-.133	-.093	-.296	-.258	-.360						.217	.265	-.003	-.061						7
8		-.232	-.286								.285	.037	-.006							8
9	-.236	-.245	-.279								.083	.037	-.006							9
10	-.138	.272									.087	.030								10
11	-.170										.044									11
								$\alpha = 12^\circ$			$\delta = 00^\circ$									
1	.238	.011	-.049	-.083	.138			-.339										.102		1
2	-.283	-.438	-.468	-.458	-.152	-.345					.373	.386	.397	.664	.501	.410	.406			2
3	-.125	-.219	-.372	-.464	-.279	-.330	-.373				.270		.311	.306	.391	.360	.056			3
4	-.118	-.193	-.177	-.345	-.330	-.345	-.360				.261	.262	.304	.237	.331	.303	.096			4
5	-.145	-.185	-.255	.292	-.319	-.372					.250	.244	.271	.032	.300	.255				5
6	-.135	-.138	-.195	-.333							.250	.316	.278	.064	.070					6
7	-.139	-.137	-.269	-.249	-.268						.213	.271	.057	.019						7
8		-.279	-.286								.275	.055	.051							8
9	-.234	-.252	-.282								.078	.068	.041							9
10	-.178	.298									.100	.069								10
11	-.216										.056									11
								$\alpha = 12^\circ$			$\delta = 10^\circ$									
1	.237	.015	-.044	-.077	.083			-.350										.266		1
2	-.275	-.436	-.449	-.443	-.283	-.386					.370	.382	.394	.385	.661	.583	.531			2
3	-.123	-.216	-.376	-.479	-.339	-.377	-.384				.265		.307	.456	.632	.549	.190			3
4	-.116	-.195	-.283	-.215	-.367	-.384	-.372				.258	.255	.255	.316	.570	.453	.258			4
5	-.144	-.186	-.240	.252	-.367	-.387					.245	.238	.320	.103	.472	.274				5
6	-.131	-.110	-.305	-.326							.248	.287	.360	-.030	.266					6
7	-.136	-.119	-.285	-.205	-.314						.211	.305	.108	-.035						7
8		-.282	-.282								.244	.095	.096							8
9	-.200	-.307	-.255								.068	.107	.091							9
10	-.143	.258									.118	.099								10
11	-.186										.112									11
								$\alpha = 12^\circ$			$\delta = 20^\circ$									
1	.238	.014	-.044	-.077	-.014			-.355										.539		1
2	-.276	-.437	-.434	-.356	-.365	-.400					.369	.381	.392	.384	.937	.883	.660			2
3	-.124	-.214	-.295	-.213	-.375	-.393	-.383				.266		.305	.555	.811	.853	.628			3
4	-.116	-.195	-.079	-.293	-.397	-.400	-.373				.257	.255	.255	.396	.977	.615	.578			4
5	-.143	-.167	-.225	.246	-.395	-.391					.244	.239	.349	-.053	.717	.366				5
6	-.131	-.077	-.258	-.209							.248	.285	.440	-.111	.535					6
7	-.106	-.154	-.333	-.165	-.363						.217	.364	.168	-.102						7
8		-.277	-.266								.244	.150	.133							8
9	-.160	-.289	-.182								.096	.152	.103							9
10	-.134	.251									.183	.145								10
11	-.187										.221									11
								$\alpha = 12^\circ$			$\delta = 30^\circ$									
1	.237	.013	-.045	-.071	-.132			-.366										.671		1
2	-.276	-.433	-.327	-.220	-.398	-.408					.369	.381	.392	.383	1.205	1.106	.888			2
3	-.123	-.188	-.226	.461	-.394	-.402	-.391				.266		.303	.577	1.048	1.102	.841			3
4	-.115	-.123	-.203	-.217	-.408	-.409	-.382				.258	.253	.254	.342	1.152	.862	.726			4
5	-.142	-.089	-.225	.257	-.405	-.399					.243	.238	.484	-.093	.961	.470				5
6	-.103	.053	-.307	-.284							.250	.286	.490	-.143	.780					6
7	.026	-.082	-.313	-.247	-.394						.227	.427	.207	-.170						7
8		-.230	-.283								.274	.200	.149							8
9	-.120	-.255	-.274								.212	.212	.113							9
10	-.098	.262									.303	.249								10
11	-.196										.312									11

[redacted]

Table 18 Concluded

Pressure Coefficients on Delta Wing with Control

Configuration H M = 1.61 R = 4.2×10^6

Orif	Upper Surface at Station										Lower Surface at Station									Orif
	1	2	3	4	5	6	7	8	9		1	2	3	4	5	6	7	8	9	
								α = 15°			δ = 00°									
1	.200	-.064	-.180	-.179	.032			-.285			.430	.461	.460	.724	.544	.479	.455	.173		1
2	-.375	-.449	-.436	-.412	-.100	-.228					.338		.389	.419	.469	.459	.126			2
3	-.153	-.363	-.412	-.342	-.135	-.255	-.322				.325	.333	.415	.343	.434	.376	.216			3
4	-.145	-.321	-.402	-.341	-.216	-.316	-.325				.318	.350	.420	.115	.390	.295				4
5	-.175	-.156	-.361	.318	-.324	-.366					.345	.435	.394	.148	.155					5
6	-.163	-.124	-.384	-.356							.338	.395	.141	.098						6
7	-.166	-.167	-.350	-.259	-.342						.393	.145	.131							7
8		-.276	-.300								.170	.153	.121							8
9	-.258	-.283	-.300								.171	.148								9
10	-.196	.321									.143									10
11	-.230																			11

Table 19

Pressure Coefficients on Delta Wing with Control

Configuration I M = 1.61 R = 4.2 x 10^6

Orif	Upper Surface at Station 1	2	3	4	5	6	7	8	9	Lower Surface at Station 1	2	3	4	5	6	7	8	9	Orif
								α = 00°			δ = 00°								
1	.400		.315	.302	.367	.393	.022								.032				1
2	.063		.031	.030	.024	.024	-.256					.035	.039	.021	.019	-.264			2
3			.011	.009	.010	.011						.006	.000	.001	.008				3
4			-.005	.017	-.019	-.188						-.013	.081	-.007	-.186				4
5			-.006	-.116	-.153	.177						-.009		-.156	-.165				5
6			.024	-.138	-.143							.060	-.153	-.141					6
7			-.096	-.134									-.139						7
8			-.131	-.142								-.135	-.138						8
9			-.143									-.136							9
10			-.145									-.132							10
								α = 00°			δ = 10°								
1	.408			.311	.374	.395	.019								.035				1
2	.075			.042	.034	.029	-.255					.046	.049	.029	.020	-.261			2
3			.026	.022	.020	.016						.019	.010	.009	.010				3
4			.011	.030	-.009	-.182						-.001	.088	.000	-.186				4
5			.007	-.107	-.182	-.171						.004		-.098	-.164				5
6			.038	-.262	-.196							.072	.047	-.132					6
7			-.050	-.244									.030						7
8			-.251	-.233								.110	.011						8
9			-.294									.140							9
10			-.214									.133							10
								α = 00°			δ = 20°								
1	.404	.306	.328	.313	.376	.395	.018								.038				1
2	.070	.050	.046	.044	.035	.031	-.254			.078	.059	.046	.048	.028	.019	-.262			2
3	.036	.024	.024	.023	.022	.019				.040		.019	.010	.008	.010				3
4	.041	.020	.010	.030	-.007	-.181				.043	.019	-.002	.091	.000	-.186				4
5	.033	.021	.005	-.059	-.191	-.170				.015	.013	.002		-.064	-.153				5
6	.021	.038	.039	-.349	-.215					.031	-.004	.096	.340	-.178					6
7	.040	.026	.069	-.326						.046	.216		.324						7
8	.018	.129	-.342	-.314						.241		.548	.262						8
9	.164	-.355	-.376								.530	.561							9
10	-.339	-.357	-.245							.411	.565	.477							10
11	-.353	-.245								.443	.491								11
12	-.234									.387									12
								α = 00°			δ = 30°								
1	.398	.295	.315	.301	.366	.389	.009								.032				1
2	.061	.038	.032	.030	.023	.024	-.265			.066	.045	.031	.032	.016	.009	-.272			2
3	.026	.011	.009	.008	.009	.009				.027		.002	-.005	-.003	.000				3
4	.031	.007	-.005	.017	-.019	-.191				.032	.003	-.018	.361	.170	-.109				4
5	.023	.007	-.010	-.041	-.210	-.182				.003	-.002	-.013		.014	.034				5
6	.010	.024	.024	-.426	-.225					.018	.003	.424	.674	-.169					6
7	.031	.020	.130	-.365						.220	.425		.684						7
8	.008	.205	-.414	-.389						.390		.614	.513						8
9	.226	-.415	-.373								.563	.840							9
10	-.410	-.371	-.372							.497	.805	.697							10
11	-.371	-.344								.615	.706								11
12	-.295									.544									12
								α = 03°			δ = 00°								
1	.402	.190	.245	.203	.307	.321	.161								-.232				1
2	-.007	-.066	-.121	-.185	-.198	-.245	-.375			.135	.142	.147	.160	.147	.154	-.153			2
3	-.019	-.043	-.044	-.069	-.082	-.085				.080		.084	.070	.095	.080				3
4	-.010	-.043	-.066	-.056	-.088	-.248				.079	.057	.054	.177	.066	-.130				4
5	-.031	-.044	-.060	-.120	-.209	-.243				.056	.052	.044		-.107	-.107				5
6	-.031	-.022	-.035	-.201	-.194					.072	.033	.127	-.102	-.098					6
7	-.007	-.040	-.085	-.184						.082	.198		-.093						7
8	-.030	-.080	-.166	-.194						.123		-.098	-.091						8
9	-.015	-.161	-.197								-.095	-.087							9
10	-.166	-.187	-.193							-.102	-.105	-.089							10
11	-.184	-.190								-.101	-.100								11
12	-.187									-.103									12

Table 19 Continued

Pressure Coefficients on Delta Wing with Control

Configuration I M = 1.61 R = 4.2 x 10^6

Orif	Upper Surface at Station 1	2	3	4	5	6	7	8	9		Lower Surface at Station 1	2	3	4	5	6	7	8	9	Orif
								α = 06°			δ = 00°									
1	.377	.124	.168	.119	.210	.286	.258									-.380				1
2	-.070	-.229	-.310	-.351	-.357	-.378	-.399				.205	.225	.235	.241	.240	.245	-.066			2
3	-.055	-.088	-.092	-.124	-.282	-.312					.135		.162	.141	.160	.168				3
4	-.041	-.085	-.107	-.116	-.123	-.362					.139	.119	.119	.260	.134	-.074				4
5	-.075	-.082	-.105	-.131	-.248	-.249					.120	.109	.106		-.059	-.052				5
6	-.061	-.063	-.073	-.226	-.226						.119	.086	.192	-.066	-.050					6
7	-.044	-.074	-.091	-.208							.125	.258		-.050						7
8	-.066	-.081	-.175	-.219							.177		-.070	-.051						8
9	-.005	-.169	-.218									-.069	-.056							9
10	-.181	-.198	-.209								-.068	-.076	-.058							10
11	-.194	-.199									-.067	-.070								11
12	-.191										-.075									12
								α = 06°			δ = 10°									
1	.376	.122	.166	.116	.209	.285	.259									-.382				1
2	-.074	-.238	-.319	-.357	-.363	-.382	-.399				.203	.224	.233	.241	.238	.245	-.064			2
3	-.057	-.091	-.095	-.127	-.286	-.314					.133		.159	.139	.158	.170				3
4	-.044	-.089	-.110	-.119	-.127	-.365					.138	.118	.115	.256	.132	-.073				4
5	-.077	-.088	-.109	-.143	-.283	-.252					.118	.107	.104		-.002	-.025				5
6	-.064	-.065	-.076	-.310	-.285						.116	.084	.188	.127	-.066					6
7	-.047	-.075	-.065	-.290							.122	.255		.127						7
8	-.069	-.053	-.278	-.261							.184		.206	.086						8
9	.028	-.277	-.325									.189	.223							9
10	-.282	-.301	-.212								.181	.198	.209							10
11	-.299	-.197									.201	.201								11
12	-.184										.165									12
								α = 06°			δ = 20°									
1	.373	.120	.164	.115	.209	.285	.257									-.382				1
2	-.076	-.239	-.320	-.358	-.363	-.381	-.399				.201	.223	.232	.240	.236	.243	-.065			2
3	-.058	-.093	-.097	-.128	-.285	-.313					.131		.158	.136	.157	.170				3
4	-.045	-.090	-.112	-.119	-.127	-.364					.137	.116	.114	.260	.130	-.074				4
5	-.078	-.089	-.109	-.116	-.288	-.251					.117	.106	.102		.074	.109				5
6	-.065	-.065	-.072	-.385	-.300						.116	.082	.391	.537	-.099					6
7	-.047	-.060	.158	-.337							.123	.449		.475						7
8	-.072	.196	-.364	-.320							.394		.690	.371						8
9	.214	-.369	-.340									.652	.694							9
10	-.363	-.345	-.294								.569	.691	.562							10
11	-.369	-.273									.602	.564								11
12	-.259										.468									12
								α = 06°			δ = 30°									
1	.373	.120	.165	.115	.210	.285	.326									-.381				1
2	-.074	-.238	-.318	-.357	-.361	-.380	-.393				.201	.223	.232	.239	.236	.243	-.023			2
3	-.057	-.093	-.095	-.127	-.284	-.311					.131		.159	.136	.157	.341				3
4	-.044	-.089	-.110	-.118	-.126	-.363					.138	.116	.116	.456	.435	.102				4
5	-.077	-.089	-.107	-.153	-.286	-.244					.117	.106	.295		.102	.140				5
6	-.064	-.065	-.072	-.413	-.296						.116	.423	.521	.602	-.077					6
7	-.048	-.061	.177	-.365							.372	.551		.733						7
8	-.068	.223	-.416	-.366							.556		.653	.573						8
9	.332	-.418	-.365									.672	.881							9
10	-.396	-.367	-.360								.689	.902	.775							10
11	-.369	-.335									.785	.788								11
12	-.298										.616									12
								α = 09°			δ = 00°									
1	.308	.051	.070	.023	.052	.157	.353									-.457				1
2	-.162	-.343	-.400	-.430	-.439	-.453	-.463				.282	.307	.314	.324	.326	.324	.020			2
3	-.094	-.141	-.223	-.348	-.391	-.405					.197		.239	.217	.239	.256				3
4	-.081	-.134	-.147	-.153	-.312	-.450					.203	.188	.188	.351	.211	-.004				4
5	-.114	-.132	-.148	-.148	-.326	-.323					.180	.175	.175		-.002	.014				5
6	-.102	-.119	-.114	-.280	-.261						.182	.151	.264	-.001	.014					6
7	-.090	-.122	-.086	-.262							.177	.324		.014						7
8	-.110	-.090	-.222	-.265							.248		-.013	.007						8
9	.009	-.222	-.261									-.007	.002							9
10	-.235	-.251	-.248								-.009	-.011	.001							10
11	-.235	-.248									-.010	-.006								11
12	-.220										-.017									12

Table 19 Continued

Pressure Coefficients on Delta Wing with Control

Configuration I M = 1.61 R = 4.2×10^6

Orif	Upper Surface at Station 1	2	3	4	5	6	7	8	9	Lower Surface at Station 1	2	3	4	5	6	7	8	9	Orif
								$\alpha = 12^\circ$		$\delta = 00^\circ$									
1	.266	-.025	-.050	-.089	-.129	-.036	.423								-.445				1
2	-.301	-.443	-.465	-.481	-.488	-.474	-.383			.359	.388	.397	.405	.404	.405	.111			2
3	-.131	-.216	-.356	-.440	-.455	-.470				.269		.312	.299	.326	.335				3
4	-.123	-.197	-.245	-.302	-.334	-.438				.259	.264	.263	.436	.293	.063				4
5	-.150	-.191	-.223	-.261	-.385	-.413				.251	.247	.249		.056	.078				5
6	-.139	-.169	-.159	-.374	-.357					.255	.220	.339	.047	.080					6
7	-.130	-.147	-.087	-.401						.231	.394		.074						7
8	-.146	-.086	-.241	-.358						.318		.030	.059						8
9	.026	-.234	-.273								.039	.050							9
10	-.250	-.269	-.253							.041	.039	.052							10
11	-.255	-.263								.041	.043								11
12	-.218									.035									12
								$\alpha = 12^\circ$		$\delta = 10^\circ$									
1	.265	-.025	-.051	-.088	-.128	-.035	.422								-.461				1
2	-.300	-.441	-.469	-.485	-.493	-.479	-.438			.360	.388	.397	.404	.404	.403	.109			2
3	-.131	-.215	-.355	-.439	-.456	-.476				.270		.311	.299	.325	.334				3
4	-.123	-.197	-.245	-.302	-.334	-.455				.259	.264	.263	.436	.292	.066				4
5	-.149	-.191	-.222	-.278	-.406	-.418				.250	.247	.249		.134	.149				5
6	-.138	-.169	-.158	-.396	-.394					.255	.220	.338	.294	.039					6
7	-.129	-.147	-.067	-.388						.231	.394		.288						7
8	-.147	-.050	-.327	-.274						.325		.400	.224						8
9	.074	-.328	-.358								.391	.413							9
10	-.324	-.345	-.248							.387	.395	.381							10
11	-.340	-.232								.399	.388								11
12	-.232									.333									12
								$\alpha = 12^\circ$		$\delta = 20^\circ$									
1	.265	-.025	-.051	-.089	-.128	-.034	.421								-.445				1
2	-.300	-.443	-.472	-.490	-.495	-.478	-.419			.359	.388	.395	.403	.401	.402	.222			2
3	-.132	-.214	-.355	-.441	-.457	-.476				.269		.310	.297	.322	.335				3
4	-.124	-.197	-.245	-.295	-.334	-.440				.258	.261	.262	.598	.306	.300				4
5	-.150	-.191	-.220	-.098	-.400	-.418				.249	.246	.247		.260	.280				5
6	-.139	-.170	-.156	-.400	-.382					.255	.217	.674	.759	.017					6
7	-.131	-.147	.323	-.345						.234	.690		.647						7
8	-.147	.334	-.387	-.341						.642		.876	.488						8
9	.351	-.378	-.369								.851	.868							9
10	-.386	-.370	-.303							.782	.869	.676							10
11	-.385	-.307								.804	.681								11
12	-.277									.598									12
								$\alpha = 12^\circ$		$\delta = 30^\circ$									
1	.266	-.024	-.049	-.088	-.127	-.033	.517								-.449				1
2	-.297	-.440	-.474	-.491	-.495	-.480	-.435			.358	.387	.394	.402	.401	.419	.352			2
3	-.131	-.215	-.353	-.440	-.456	-.472				.269		.307	.297	.322	.508				3
4	-.123	-.197	-.243	-.297	-.333	-.448				.260	.261	.262	.656	.641	.315				4
5	-.149	-.192	-.218	-.103	-.402	-.428				.248	.247	.652		.286	.240				5
6	-.140	-.168	-.156	-.407	-.379					.258	.674	.740	.806	-.017					6
7	-.129	-.145	.319	-.371						.618	.769		.910						7
8	-.149	.352	-.385	-.384						.774		.915	.662						8
9	.451	-.377	-.376								.917	1.122							9
10	-.420	-.377	-.357							.861	1.117	.865							10
11	-.393	-.359								.939	.865								11
12	-.304									.739									12
								$\alpha = 15^\circ$		$\delta = 00^\circ$									
1	.231	-.094	-.184	-.194	-.269	-.146	.504								-.403				1
2	-.372	-.445	-.445	-.445	-.452	-.452	-.317			.436	.459	.455	.460	.488	.499	.236			2
3	-.163	-.356	-.415	-.439	-.450	-.430				.340		.390	.412	.439	.455				3
4	-.155	-.336	-.402	-.394	-.436	-.431				.324	.337	.373	.576	.415	.140				4
5	-.181	-.162	-.395	-.311	-.456	-.373				.323	.356	.380		.133	.166				5
6	-.171	-.175	-.385	-.427	-.443					.355	.339	.455	.134	.160					6
7	-.162	-.177	-.093	-.413						.334	.513		.164						7
8	-.176	-.066	-.304	-.348						.434		.117	.139						8
9	.054	-.261	-.293								.127	.136							9
10	-.276	-.293	-.268							.128	.123	.144							10
11	-.284	-.192								.136	.126								11
12	-.153									.118									12

Table 19 Continued

Pressure Coefficients on Delta Wing with Control

Configuration I M = 1.61 R = 4.2×10^6

Orif	Upper Surface at Station 1	2	3	4	5	6	7	8	9	Lower Surface at Station 1	2	3	4	5	6	7	8	9	Orif
							$\alpha = -03^\circ$			$\delta = 00^\circ$									
1	.372	.314	.244	.261	.316	.341	-.205								.148				1
2	.114	.106	.123	.133	.124	.143	-.165			.013	-.036	-.093	-.098	-.149	-.200	-.356			2
3	.065	.069	.086	.068	.082	.077				-.010		-.045	-.069	-.074	-.080				3
4	.066	.045	.049	.069	.040	-.143				-.009	-.018	-.059	.023	-.069	-.239				4
5	.070	.052	.038	-.127	-.118	-.138				-.030	-.040	-.059		-.202	-.226				5
6	.051	.069	.064	-.131	-.114					-.018	-.053	.016	-.166	-.182					6
7	.063	.046	-.100	-.139						-.001	.093		-.158						7
8	.047	-.091	-.136	-.144						.044		-.146	-.161						8
9	.000	-.116	-.131								-.135	-.156							9
10	-.124	-.139	-.135							-.151	-.151	-.146							10
11	-.134	-.140								-.155	-.149								11
12	-.132									-.155									12
							$\alpha = -06^\circ$			$\delta = 00^\circ$									
1	.316	.284	.141	.150	.181	.186	-.379								.245				1
2	.182	.189	.215	.223	.210	.231	-.066			-.068	-.247	-.301	-.319	-.352	-.357	-.388			2
3	.120	.136	.159	.138	.143	.159				-.056		-.106	-.140	-.277	-.302				3
4	.118	.099	.110	.137	.110	-.085				-.060	-.076	-.105	-.074	-.120	-.353				4
5	.121	.106	.099	-.134	-.063	-.077				-.076	-.087	-.111		-.248	-.254				5
6	.103	.127	.119	-.055	-.064					-.061	-.097	-.031	-.234	-.224					6
7	.113	.094	-.115	-.065						-.044	.039		-.212						7
8	.101	-.100	-.078	-.071						.003		-.191	-.222						8
9	.020	-.068	-.066								-.181	-.215							9
10	-.074	-.076	-.080							-.200	-.205	-.177							10
11	-.078	-.078								-.203	-.194								11
12	-.077									-.189									12
							$\alpha = -06^\circ$			$\delta = 10^\circ$									
1	.319	.287	.144	.151	.182	.187	-.385								.247				1
2	.187	.194	.219	.226	.212	.234	-.064			-.066	-.253	-.306	-.335	-.356	-.338	-.393			2
3	.125	.140	.164	.140	.147	.162				-.053		-.103	-.139	-.278	-.306				3
4	.122	.103	.114	.141	.114	-.083				-.057	-.074	-.103	-.072	-.119	-.358				4
5	.125	.110	.103	-.128	-.112	-.075				-.073	-.084	-.109		-.206	-.256				5
6	.107	.132	.123	-.191	-.132					-.059	-.094	-.024	-.118	-.182					6
7	.118	.099	-.082	-.167						-.041	.044		-.101						7
8	.105	-.065	-.194	-.182						.015		-.024	-.109						8
9	.025	-.211	-.238								-.009	-.005							9
10	-.197	-.224	-.236							-.041	-.012	-.005							10
11	-.220	-.224								-.019	-.011								11
12	-.218									-.030									12
							$\alpha = -06^\circ$			$\delta = 20^\circ$									
1	.316	.284	.141	.148	.178	.184	-.388								.252				1
2	.186	.195	.219	.228	.215	.238	-.063			-.068	-.257	-.307	-.339	-.359	-.336	-.395			2
3	.125	.139	.164	.143	.149	.163				-.055		-.105	-.141	-.283	-.310				3
4	.122	.103	.114	.143	.115	-.080				-.059	-.077	-.105	-.065	-.122	-.360				4
5	.124	.109	.103	-.045	-.126	-.074				-.076	-.086	-.111		-.170	-.249				5
6	.107	.131	.125	-.311	-.159					-.061	-.097	.059	.113	-.226					6
7	.119	.102	.077	-.278						-.043	.132		.148						7
8	.108	.113	-.310	-.285						.147		.302	.118						8
9	.131	-.329	-.353								.316	.338							9
10	-.312	-.336	-.242							.265	.350	.305							10
11	-.328	-.227								.286	.310								11
12	-.231									.247									12
							$\alpha = -06^\circ$			$\delta = 30^\circ$									
1	.318	.285	.141	.149	.178	.182	-.389								.255				1
2	.189	.198	.222	.230	.220	.241	-.060			-.066	-.258	-.308	-.339	-.357	-.332	-.388			2
3	.127	.141	.167	.146	.153	.167				-.053		-.103	-.140	-.283	-.310				3
4	.124	.106	.118	.147	.119	-.077				-.056	-.075	-.103	.212	.091	-.366				4
5	.126	.112	.108	.066	-.125	-.069				-.073	-.084	-.109		-.135	-.148				5
6	.109	.135	.130	-.388	-.158					-.059	-.095	.274	.392	-.245					6
7	.122	.114	.158	-.346						-.014	.309		.430						7
8	.111	.193	-.356	-.334						.303		.445	.306						8
9	.230	-.367	-.350								.441	.588							9
10	-.382	-.348	-.318							.463	.603	.523							10
11	-.382	-.308								.589	.560								11
12	-.288									.501									12

Table 19 Continued

Pressure Coefficients on Delta Wing with Control

Configuration I M = 1.61 R = 4.2×10^6

Orif	Upper Surface at Station 1	2	3	4	5	6	7	8	9		Lower Surface at Station 1	2	3	4	5	6	7	8	9	Orif
								$\alpha = -09^\circ$			$\delta = 00^\circ$									
1	.273	.220	.041	.016	.022	-.005	-.448									.329				1
2	.271	.273	.300	.296	.299	.317	.011				-.142	-.328	-.388	-.391	-.423	-.444	-.427			2
3	.189	.196	.240	.218	.227	.238					-.090		-.215	-.310	-.382	-.394				3
4	.188	.167	.180	.213	.188	-.022					-.092	-.120	-.136	-.140	-.239	-.435				4
5	.190	.172	.170	-.145	-.007	-.015					-.107	-.132	-.144		-.305	-.307				5
6	.166	.195	.185	-.017	-.014						-.096	-.132	-.072	-.249	-.277					6
7	.179	.155	-.116	-.034							-.077	-.035		-.235						7
8	.169	-.097	-.056	-.036							-.034		-.194	-.234						8
9	.041	-.040	-.031									-.188	-.221							9
10	-.050	-.047	-.050								-.202	-.202	-.190							10
11	-.046	-.051									-.210	-.202								11
12	-.048										-.191									12
								$\alpha = -12^\circ$			$\delta = 00^\circ$									
1	.209	.103	-.067	-.157	-.150	-.207	-.424									.407				1
2	.347	.360	.390	.370	.373	.391	.109				-.286	-.393	-.447	-.466	-.483	-.463	-.331			2
3	.265	.272	.312	.305	.313	.329					-.132		-.305	-.334	-.409	-.442				3
4	.268	.245	.260	.298	.275	.052					-.129	-.160	-.291	-.244	-.330	-.414				4
5	.248	.248	.251	-.216	.064	.071					-.145	-.148	-.272		-.365	-.348				5
6	.248	.280	.263	.068	.064						-.132	-.157	-.161	-.356	-.316					6
7	.253	.229	-.143	.061							-.117	-.049		-.359						7
8	.243	-.093	.031	.052							-.087		-.264	-.260						8
9	.066	.040	.055									-.227	-.245							9
10	.032	.045	.031								-.253	-.253	-.264							10
11	.038	.037									-.255	-.189								11
12	.036										-.178									12
								$\alpha = -12^\circ$			$\delta = 10^\circ$									
1	.210	.105	-.066	-.156	-.151	-.208	-.423									.406				1
2	.347	.359	.390	.371	.373	.393	.109				-.285	-.393	-.444	-.465	-.483	-.461	-.318			2
3	.265	.273	.313	.305	.313	.330					-.131		-.304	-.334	-.407	-.441				3
4	.269	.246	.261	.298	.276	.050					-.127	-.160	-.291	-.238	-.330	-.410				4
5	.248	.248	.252	-.277	-.006	.049					-.145	-.147	-.271		-.338	-.338				5
6	.248	.281	.264	-.109	-.022						-.132	-.157	-.158	-.310	-.330					6
7	.254	.231	-.126	-.091							-.116	-.047		-.305						7
8	.244	-.070	-.164	-.136							-.080		-.126	-.270						8
9	.072	-.151	-.165									-.076	-.085							9
10	-.139	-.162	-.171								-.118	-.072	-.069							10
11	-.160	-.165									-.098	-.076								11
12	-.164										-.101									12
								$\alpha = -12^\circ$			$\delta = 20^\circ$									
1	.210	.105	-.065	-.157	-.151	-.210	-.432									.408				1
2	.348	.363	.392	.373	.374	.394	.110				-.284	-.392	-.444	-.466	-.482	-.464	-.317			2
3	.267	.274	.314	.307	.315	.330					-.130		-.305	-.334	-.408	-.443				3
4	.270	.247	.263	.299	.278	.053					-.127	-.159	-.292	-.201	-.322	-.411				4
5	.249	.249	.254	-.168	-.030	.044					-.144	-.147	-.272		-.286	-.316				5
6	.249	.282	.266	-.249	-.062						-.131	-.157	-.136	-.207	-.373					6
7	.256	.233	-.036	-.231							-.115	.012		-.166						7
8	.248	.057	-.279	-.273							.067		.122	-.157						8
9	.127	-.284	-.301									.214	.230							9
10	-.263	-.289	-.269								.136	.230	.243							10
11	-.280	-.231									.157	.219								11
12	-.226										.124									12
								$\alpha = -12^\circ$			$\delta = 30^\circ$									
1	.210	.105	-.067	-.158	-.152	-.210	-.348									.409				1
2	.346	.361	.391	.372	.378	.397	.111				-.285	-.394	-.445	-.467	-.482	-.457	-.257			2
3	.265	.273	.315	.306	.316	.333					-.131		-.306	-.335	-.411	-.400				3
4	.269	.246	.262	.299	.278	.057					-.128	-.160	-.294	-.153	-.211	-.415				4
5	.249	.248	.255	-.061	-.035	.044					-.145	-.148	-.273		-.353	-.380				5
6	.248	.282	.268	-.350	-.066						-.132	-.157	.056	-.053	-.356					6
7	.256	.236	.147	-.340							-.113	.206		.044						7
8	.252	.211	-.363	-.293							.188		.601	-.007						8
9	.207	-.373	-.375									.356	.676							9
10	-.351	-.362	-.297								.400	.561	.593							10
11	-.363	-.277									.431	.525								11
12	-.255										.343									12

Table 19 Concluded

Pressure Coefficients on Delta Wing with Control

Configuration I M = 1.61 R = 4.2×10^6

Orif	Upper Surface at Station										Lower Surface at Station									Orif
	1	2	3	4	5	6	7	8	9		1	2	3	4	5	6	7	8	9	
	$\alpha = -15^\circ$										$\delta = 00^\circ$									
1	.166	.016	-.134	-.279	-.293	-.361	-.398									.480				1
2	.403	.415	.430	.423	.449	.475	.193				-.345	-.413	-.436	-.441	-.447	-.437	-.310			2
3	.319	.332	.394	.400	.409	.434					-.153		-.385	-.412	-.429	-.424				3
4	.331	.305	.357	.393	.381	.108					-.152	-.264	-.391	-.352	-.414	-.410				4
5	.306	.340	.363	-.198	.128	.130					-.169	-.157	-.388		-.434	-.359				5
6	.330	.385	.357	.115	.122						-.156	-.176	-.309	-.357	-.425					6
7	.341	.315	-.133	.095							-.135	-.081		-.372						7
8	.336	-.078	.055	.089							-.114		-.236	-.328						8
9	.091	.073	.097									-.210	-.236							9
10	.061	.078	.067								-.241	-.231	-.218							10
11	.079	.065									-.249	-.147								11
12	.073										-.143									12

Table 20

Pressure Coefficients on Delta Wing with Control

Configuration J M = 1.61 R = 4.2×10^6

Orif	Upper Surface at Station 1	2	3	4	5	6	7	8	9	Lower Surface at Station 1	2	3	4	5	6	7	8	9	Orif
							$\alpha = 00^\circ$			$\delta = 00^\circ$									
1	.386	.368	.289	.275	.310	.358	1.711												1
2	.053	.033	.030	.031	.017	.013	.031			.079		.044		.014	.012	.021			2
3	.021	.016		.007	-.003	.002	.016			.041	.020	.007		.010	.002	.029			3
4	.025	.011	-.009	-.020	-.021	.070	-.165			.032		-.005	-.005	-.031	.033	-.129			4
5	.007	.011	.002	-.043	.010	.007	-.271			.001	.014	-.022		.016	.059	-.271			5
6	.014	.000	.008	-.139						.020	.000	.033	-.145		-.196				6
7	.016	.008		-.157		-.185				.022	.007		-.139		-.201				7
8	.009	.084		-.148		-.166				.026			-.139		-.203				8
9		-.124		-.138									-.146						9
10	-.084	-.142									-.150								10
11	-.075	-.142								-.115	-.147								11
12	-.123	-.140								-.144	-.130								12
							$\alpha = 00^\circ$			$\delta = 10^\circ$									
1	.394	.375	.293	.279	.306	.360	1.710												1
2	.064	.037	.038	.030	.011	.014	-.192			.076		.040		.004	.005	.387			2
3	.026	.018		.005	-.002	-.001	-.189			.033	.019	.007		.008	.001	.291			3
4	.028	.006	-.011	-.015	-.016	.070	-.376			.037		-.004	-.008	-.038	.028	.032			4
5	.015	.009	.002	-.025	.016	-.198	-.389			.006	.012	-.025		.014	.264	-.061			5
6	.015	-.001	.009	-.290						.021	-.002	.032	.100		.051				6
7	.020	.009		-.321		-.346				.018	.007		.122		.036				7
8	.002	.089		-.315		-.321				.050			.129		.028				8
9		-.287		-.302									.142						9
10	-.200	-.297									.123								10
11	-.070	-.321								.095	.127								11
12	-.185	-.139								.125	.131								12
							$\alpha = 00^\circ$			$\delta = 20^\circ$									
1	.397	.370	.289	.276	.309	.364	1.709												1
2	.062	.044	.039	.039	.020	.020	-.336			.069		.035		-.004	-.004	.966			2
3	.026	.024		.008	-.004	.006	-.413			.031	.016	.004		.000	-.007	.508			3
4	.026	.008	-.007	-.007	-.015	.080	-.426			.036		-.013	.272	-.041	.061	.124			4
5	.011	.011	.007	.138	.021	-.324	-.412			-.001	.000	-.031		.208	.582	.232			5
6	.015	-.001	.017	-.394						.013	-.007	.309	.319		.385				6
7	.023	.024		-.326		-.339				.017	.307		.555		.403				7
8	.039	.164		-.300		-.294				.252			.603		.381				8
9		-.381		-.290									.528						9
10	-.313	-.400									.509								10
11	-.148	-.324								.489	.563								11
12	-.180	-.271								.483	.521								12
							$\alpha = 00^\circ$			$\delta = 30^\circ$									
1	.388	.374	.288	.271	.307	.358	1.705												1
2	.056	.039	.032	.026	.016	.011	-.415			.072		.029		-.007	.031	.976			2
3	.025	.018		.007	-.001	.000	-.455			.025	.010	.001		-.003	.349	.795			3
4	.029	.002	-.007	-.012	-.020	.100	-.461			.036		-.018	.421	.357	.620	.616			4
5	.017	.007	.003	.211	.024	-.407	-.441			-.005	.006	.316		.441	.573	.632			5
6	.006	-.005	.010	-.344						.014	.362	.400	.423		.848				6
7	.015	.025		-.337		-.349				.325	.419		.600		.768				7
8	.040	.190		-.347		-.357				.411			.740		.649				8
9		-.388		-.340									.669						9
10	-.374	-.376									.462								10
11	-.191	-.377								.664	.598								11
12	-.290	-.354								.641	.588								12
							$\alpha = 06^\circ$			$\delta = 00^\circ$									
1	.338	.114	.160	.010	.120	.219	1.710												1
2	-.074	-.234	-.307	-.351	-.361	-.382	-.361			.210		.233		.214	.227	.208			2
3	-.054	-.076		-.130	-.276	-.336	-.380			.136	.146	.149		.154	.185	.231			3
4	-.050	-.079	-.109	-.135	-.127	-.286	-.431			.136		.110	.113	.097	.198	-.014			4
5	-.078	-.083	-.100	-.067	-.101	-.287	-.411			.109	.114	.084		.169	.160	-.100			5
6	-.058	-.084	-.086	-.230						.108	.094	.129	-.049		-.078				6
7	-.051	-.074		-.236		-.338				.109	.102		-.049		-.086				7
8	-.030	.078		-.228		-.304				.068			-.051		-.087				8
9		-.183		-.204									-.059						9
10	-.132	-.192									-.089								10
11	-.128	-.204								-.025	-.074								11
12	-.166	-.198								-.082	-.054								12

Table 20 Continued

Pressure Coefficients on Delta Wing with Control

Configuration J M = 1.61 R = 4.2 x 10^6

Orif	Upper Surface at Station 1	2	3	4	5	6	7	8	9	Lower Surface at Station 1	2	3	4	5	6	7	8	9	Orif
							α = 06°			δ = 10°									
1	.339	.114	.159	.002	.116	.219	1.708												1
2	-.081	-.242	-.317	-.359	-.362	-.388	-.406			.201		.236		.208	.231	.675			2
3	-.065	-.080		-.133	-.279	-.341	-.426			.132	.145	.148		.144	.182	.441			3
4	-.051	-.088	-.115	-.137	-.129	-.292	-.425			.138		.111	.112	.094	.195	.075			4
5	-.089	-.087	-.107	-.039	-.106	-.348	-.424			.111	.114	.083		.172	.461	.157			5
6	-.066	-.089	-.083	-.345						.112	.093	.131	.257		.227				6
7	-.063	-.072		-.363		-.420				.101	.095		.270		.219				7
8	-.038	.082		-.367		-.376				.083			.282		.201				8
9		-.321		-.228									.289						9
10	-.262	-.327									.240								10
11	-.107	-.353								.220	.249								11
12	-.217	-.179								.248	.255								12
							α = 06°			δ = 20°									
1	.341	.113	.158	.003	.123	.230	1.710												1
2	-.069	-.238	-.310	-.347	-.360	-.386	-.383			.204		.234		.208	.225	1.190			2
3	-.058	-.078		-.132	-.272	-.339	-.401			.138	.143	.149		.150	.183	.600			3
4	-.044	-.086	-.109	-.129	-.118	-.274	-.406			.140		.108	.521	.092	.632	.497			4
5	-.078	-.086	-.100	.287	-.100	-.394	-.374			.116	.118	.082		.513	.796	.558			5
6	-.065	-.082	-.075	-.413						.113	.096	.504	.523		.726				6
7	-.059	-.056		-.362		-.349				.105	.486		.719		.663				7
8	-.013	.185		-.330		-.361				.431			.762		.585				8
9		-.399		-.318									.651						9
10	-.337	-.407									.645								10
11	-.208	-.335								.646	.704								11
12	-.220	-.251								.577	.631								12
							α = 06°			δ = 30°									
1	.342	.120	.158	.007	.123	.234	1.707												1
2	-.074	-.234	-.314	-.355	-.362	-.382	-.398			.200		.238		.208	.312	1.306			2
3	-.056	-.078		-.130	-.272	-.321	-.402			.134	.143	.146		.150	.632	.966			3
4	-.047	-.081	-.112	-.127	-.117	-.261	-.393			.145		.112	.629	.577	.704	.847			4
5	-.078	-.083	-.099	.294	-.100	-.424	-.387			.118	.116	.508		.645	.617	.743			5
6	-.063	-.079	-.075	-.356						.113	.520	.579	.641		1.074				6
7	-.057	-.047		-.358		-.391				.489	.580		.876		.997				7
8	-.011	.197		-.374		-.393				.575			.999		.800				8
9		-.438		-.363									.852						9
10	-.395	-.408									.609								10
11	-.218	-.396								.740	.715								11
12	-.294	-.336								.671	.682								12
							α = 12°			δ = 00°									
1	.209	-.096	-.015	-.199	-.168	-.190	1.710												1
2	-.289	-.420	-.452	-.467	-.489	-.503	-.416			.335		.394		.361	.373	.363			2
3	-.124	-.183		-.424	-.448	-.475	-.416			.270	.279	.288		.297	.327	.304			3
4	-.109	-.173	-.218	-.315	-.434	-.448	-.406			.274		.249	.247	.233	.339	.021			4
5	-.154	-.185	-.176	-.086	-.309	-.423	-.410			.238	.245	.216		.333	.251	.057			5
6	-.137	-.171	-.146	-.361						.238	.218	.257	.061		.042				6
7	-.129	-.146		-.371		-.411				.199	.208		.055		.039				7
8	-.096	.077		-.361		-.397				.133			.054		.036				8
9		-.237		-.334									.042						9
10	-.211	-.250									.002								10
11	-.158	-.258								.048	.019								11
12	-.196	-.253								.044	.033								12
							α = 12°			δ = 10°									
1	.210	-.094	-.017	-.199	-.170	-.190	1.705												1
2	-.294	-.424	-.459	-.484	-.490	-.499	-.420			.339		.398		.359	.372	.875			2
3	-.126	-.183		-.430	-.449	-.479	-.413			.273	.280	.290		.295	.325	.489			3
4	-.117	-.185	-.214	-.310	-.433	-.442	-.409			.274		.253	.248	.229	.339	.226			4
5	-.162	-.185	-.176	-.013	-.303	-.434	-.402			.240	.248	.213		.334	.614	.387			5
6	-.138	-.177	-.149	-.423						.238	.219	.254	.432		.412				6
7	-.135	-.149		-.426		-.414				.200	.207		.439		.415				7
8	-.106	.082		-.438		-.409				.145			.457		.377				8
9		-.360		-.326									.438						9
10	-.301	-.371									.405								10
11	-.159	-.380								.373	.401								11
12	-.232	-.220								.393	.405								12

Table 20 Continued

Pressure Coefficients on Delta Wing with Control

Configuration J M = 1.61 R = 4.2×10^6

Orif	Upper Surface at Station 1	2	3	4	5	6	7	8	9	Lower Surface at Station 1	2	3	4	5	6	7	8	9	Orif
							$\alpha = 12^\circ$			$\delta = 20^\circ$									
1	.221	-.078	-.002	-.181	-.157	-.171	1.700												1
2	-.280	-.412	-.452	-.471	-.477	-.473	-.396			.345		.398		.366	.377	1.266			2
3	-.113	-.167		-.413	-.436	-.457	-.406			.281	.281	.292		.292	.377	.800			3
4	-.093	-.167	-.202	-.294	-.415	-.404	-.406			.292		.260	.737	.239	.874	.737			4
5	-.145	-.169	-.161	.514	-.277	-.417	-.396			.260	.260	.218		.747	.821	.684			5
6	-.122	-.160	-.129	-.449						.260	.239	.715	.747		.980				6
7	-.122	-.132		-.427		-.396				.218	.694		.906		.853				7
8	-.079	.218		-.374		-.396				.641			.906		.715				8
9		-.417		-.396									.758						9
10	-.353	-.427									.843								10
11	-.237	-.343								.811	.874								11
12	-.247	-.269								.694	.768								12
							$\alpha = 12^\circ$			$\delta = 30^\circ$									
1	.208	-.096	-.013	-.199	-.167	-.242	1.711												1
2	-.285	-.423	-.461	-.482	-.489	-.485	-.394			.335		.390		.352	.656	1.103			2
3	-.128	-.182		-.430	-.456	-.475	-.406			.263	.279	.288		.469	.879	1.053			3
4	-.118	-.179	-.210	-.299	-.439	-.396	-.402			.273		.253	.800	.738	.897	.933			4
5	-.161	-.185	-.174	.500	-.263	-.412	-.393			.239	.237	.719		.831	.758	.777			5
6	-.136	-.173	-.147	-.397						.237	.714	.775	.796		1.261				6
7	-.134	-.140		-.392		-.407				.658	.776		.937		1.095				7
8	-.091	.216		-.410		-.398				.775			1.019		.874				8
9		-.421		-.400									.876						9
10	-.412	-.417									.902								10
11	-.227	-.411								.916	1.036								11
12	-.312	-.391								.807	.911								12
							$\alpha = -06^\circ$			$\delta = 00^\circ$									
1	.319	.389	.176	.167	.190	.185	1.705												1
2	.185	.189	.217	.227	.212	.221	.225			-.065		-.288		-.340	-.366	-.356			2
3	.121	.136		.125	.132	.175	.220			-.044	-.082	-.107		-.264	-.326	-.364			3
4	.121	.100	.106	.092	.109	.215	-.030			-.049		-.100	-.118	-.150	-.280	-.420			4
5	.112	.110	.098	-.046	.138	.164	-.098			-.082	-.080	-.121		-.109	-.073	-.407			5
6	.105	.090	.105	-.069						-.061	-.082	-.060	-.222		-.341				6
7	.099	.086		-.086		-.084				-.054	-.071		-.216		-.322				7
8	.034	.107		-.082		-.069				-.010			-.211		-.307				8
9		-.077		-.074									-.204						9
10	-.037	-.107									-.186								10
11	-.010	-.088								-.169	-.202								11
12	-.071	-.076								-.181	-.184								12
							$\alpha = -06^\circ$			$\delta = 10^\circ$									
1	.302	.376	.165	.145	.172	.163	1.705												1
2	.172	.181	.203	.214	.201	.209	-.052			-.057		-.283		-.340	-.363	-.263			2
3	.103	.124		.121	.118	.161	-.006			-.041	-.078	-.107		-.269	-.320	-.185			3
4	.103	.087	.093	.084	.096	.202	-.176			-.043		-.097	-.111	-.150	-.270	-.240			4
5	.093	.098	.087	-.038	.121	-.105	-.283			-.073	-.073	-.118		-.110	-.024	-.344			5
6	.084	.080	.092	-.244						-.058	-.084	-.056	-.033		-.176				6
7	.084	.072		-.275		-.286				-.049	-.059		.010		-.126				7
8	.019	.112		-.271		-.267				.030			.021		-.124				8
9		-.254		-.263									.026						9
10	-.140	-.258									.043								10
11	-.039	-.284								.010	.046								11
12	-.175	-.156								.037	.046								12
							$\alpha = -06^\circ$			$\delta = 20^\circ$									
1	.319	.395	.179	.163	.185	.173	1.708												1
2	.190	.195	.222	.232	.223	.231	-.238			-.064		-.290		-.348	-.372	-.163			2
3	.128	.145		.145	.143	.190	-.177			-.044	-.083	-.110		-.282	-.325	.067			3
4	.128	.111	.118	.107	.119	.226	-.323			-.042		-.097	.092	-.145	-.162	-.025			4
5	.122	.116	.115	.115	.153	-.247	-.374			-.083	-.073	-.122		-.092	.044	-.121			5
6	.105	.100	.114	-.355						-.059	-.083	.166	.151		.076				6
7	.099	.107		-.377		-.385				-.053	.180		.361		.155				7
8	.084	.181		-.382		-.292				.162			.391		.159				8
9		-.354		-.255									.365						9
10	-.295	-.374									.371								10
11	-.110	-.379								.331	.410								11
12	-.175	-.217								.362	.388								12

Table 20 Concluded

Pressure Coefficients on Delta Wing with Control

Configuration J M = 1.61 R = 4.2×10^6

Orif	Upper Surface at Station 1	2	3	4	5	6	7	8	9	Lower Surface at Station 1	2	3	4	5	6	7	8	9	Orif
							$\alpha = -06^\circ$			$\delta = 30^\circ$									
1	.310	.394	.168	.149	.182	.185	1.711												1
2	.190	.196	.228	.240	.230	.234	-.369			-.072		-.301		-.345	-.012	.291			2
3	.123	.143		.140	.144	.190	-.359			-.048	-.086	-.111		-.098	.067	.460			3
4	.123	.102	.118	.109	.118	.219	-.413			-.048		-.105	.165	-.047	.101	.148			4
5	.116	.109	.116	.140	.151	-.347	-.419			-.086	-.077	.018		.094	.151	.267			5
6	.100	.093	.116	-.335						-.060	.146	.333	.175		.198				6
7	.105	.123		-.328		-.351				.101	.343		.443		.258				7
8	.108	.228		-.333		-.333				.300			.539		.217				8
9		-.383		-.324									.532						9
10	-.362	-.360									.485								10
11	-.193	-.359								.649	.620								11
12	-.239	-.337								.620	.590								12
							$\alpha = -12^\circ$			$\delta = 00^\circ$									
1	.147	.230	-.012	-.135	-.084	-.131	1.709												1
2	.351	.357	.390	.390	.376	.364	.385			-.303		-.443		-.490	-.492	-.432			2
3	.263	.260		.297	.302	.320	.379			-.125	-.203	-.381		-.449	-.483	-.407			3
4	.266	.247	.262	.247	.266	.353	.022			-.131		-.234	-.290	-.443	-.469	-.405			4
5	.239	.252	.252	-.046	.296	.354	.080			-.161	-.181	-.201		-.302	-.086	-.424			5
6	.245	.234	.247	.049						-.136	-.191	-.151	-.359		-.424				6
7	.222	.218		.033		.039				-.130	-.164		-.343		-.407				7
8	.136	.160		.043		.074				-.057			-.342		-.419				8
9		.034		.059									-.339						9
10	-.005	.000									-.244								10
11	.136	.029								-.223	-.265								11
12	.057	.037								-.229	-.243								12
							$\alpha = -12^\circ$			$\delta = 10^\circ$									
1	.141	.225	-.011	-.132	-.086	-.136	1.708												1
2	.345	.362	.393	.391	.377	.366	.055			-.308		-.461		-.487	-.492	-.442			2
3	.270	.261		.295	.306	.326	.110			-.133	-.207	-.384		-.452	-.482	-.428			3
4	.260	.247	.263	.252	.272	.350	-.076			-.132		-.241	-.300	-.449	-.468	-.439			4
5	.241	.254	.252	-.053	.292	.033	-.132			-.165	-.183	-.208		-.290	-.096	-.433			5
6	.251	.234	.248	-.170						-.143	-.193	-.159	-.263		-.433				6
7	.226	.226		-.203		-.199				-.134	-.170		-.229		-.437				7
8	.123	.136		-.200		-.179				-.043			-.219		-.322				8
9		-.191		-.189									-.228						9
10	-.127	-.195									-.064								10
11	.017	-.213								-.064	-.056								11
12	-.145	-.207								-.068	-.034								12
							$\alpha = -12^\circ$			$\delta = 20^\circ$									
1	.146	.228	-.017	-.133	-.092	-.140	1.707												1
2	.345	.361	.394	.388	.379	.369	-.184			-.308		-.466		-.466	-.392	-.373			2
3	.266	.260		.301	.298	.325	-.071			-.127	-.210	-.393		-.460	-.384	-.252			3
4	.263	.249	.264	.247	.268	.351	-.220			-.133		-.239	-.198	-.402	-.377	-.272			4
5	.241	.249	.251	.007	.291	-.177	-.305			-.162	-.185	-.202		-.294	-.077	-.352			5
6	.248	.231	.247	-.317						-.142	-.193	.003	-.191		-.286				6
7	.225	.225		-.346		-.348				-.133	-.138		-.189		-.243				7
8	.140	.189		-.349		-.339				.098			-.144		-.236				8
9		-.324		-.341									-.107						9
10	-.274	-.343									.245								10
11	-.090	-.348								.196	.253								11
12	-.272	-.195								.252	.291								12
							$\alpha = -12^\circ$			$\delta = 30^\circ$									
1	.149	.228	-.013	-.138	-.088	-.137	1.706												1
2	.348	.369	.395	.394	.381	.371	-.325			-.310		-.457		-.337	-.210	-.118			2
3	.267	.260		.305	.306	.331	-.219			-.131	-.211	-.366		-.316	-.172	.104			3
4	.261	.249	.265	.249	.272	.361	-.360			-.129		-.320	-.140	-.277	-.142	-.006			4
5	.239	.249	.256	.013	.297	-.292	-.392			-.165	-.179	-.233		-.178	.016	-.091			5
6	.244	.236	.249	-.409						-.142	-.184	.115	-.138		-.095				6
7	.230	.234		-.398		-.331				-.085	.196		-.097		-.067				7
8	.187	.250		-.347		-.324				.191			-.054		-.111				8
9		-.406		-.328									-.065						9
10	-.349	-.414									.557								10
11	-.200	-.369								.515	.585								11
12	-.238	-.333								.483	.551								12

Table 21

Pressure Coefficients on Delta Wing with Control

Configuration J1 M = 1.61 R = 4.2 x 10^6

Orif	Upper Surface at Station 1	2	3	4	5	6	7	8	9	Lower Surface at Station 1	2	3	4	5	6	7	8	9	Orif
							α = 00°				δ = 00°								
1	.347	.302	.312	.306	.321	.326	-.054												1
2	.067	.048	.043	.035	.024	.008	.117			.073	.056	.039	.039	.006	.003	-.002			2
3	.038	.023	.018	.009	-.002	.003	.050			.042		.009	.003	.001	-.007	.002			3
4	.040	.018	.002	-.012	-.016	.061	.043			.034	.017	-.007	-.013	-.035	.019	-.019			4
5	.032	.020	-.006	-.035	.019	.026	.059			.014	.007	-.007		.023	-.031	-.005			5
6	.024	-.001	.008	-.017		-.052				.028	-.018	.044	-.097		-.092				6
7	.022	.018		-.056		-.095				.024	.018		-.100		-.143				7
8	.015	-.014		-.058		-.087				.050			-.087		-.133				8
9	-.002	.006		-.042						-.029	-.063		-.084						9
10	-.059	-.036		-.290						-.083	-.058								10
11	-.056	-.052								-.091	-.079								11
12	-.038	-.037								-.088	-.078								12
13		-.268																	13
							α = 00°				δ = 10°								
1	.346	.303	.310		.322	.330	-.006												1
2	.070	.050	.045		.039	.022	-.062			.073	.056		.039	.002	.002	.121			2
3	.039	.025			.007	.014	-.078			.038			.005	.003	-.006	.178			3
4	.045	.020			-.007	.074	-.126			.040	.006		-.006	-.039	.024	.180			4
5	.036	.021			.028	-.118	-.156			.013	-.017			.022	.137	.180			5
6	.020	.001				-.169				.028	.014		.086		.101				6
7	.025	.022				-.226				.023	.123		.104		.043				7
8	.015	-.008				-.208				.069			.121		.046				8
9	-.137	-.128								.113	.127		.132						9
10	-.134	-.149		-.289						.068	.141								10
11	-.171	-.186								.102	.140								11
12	-.170	-.172								.104	.116								12
13		-.269																	13
							α = 00°				δ = 20°								
1	.347	.306	.314		.327	.333	-.082												1
2	.070	.052	.046		.035	.030	-.228			.073	.055		.040	-.006	.001	.335			2
3	.038	.028			.007	.017	-.234			.039			.003	-.001	-.009	.451			3
4	.048	.018			-.011	.083	-.342			.045	.016		.186	-.042	.058	.397			4
5	.038	.020		.106	.035	-.272	-.364			.013	.003			.060	.479	.356			5
6	.022	.004		-.282		-.293				.029	-.020		.337		.409				6
7	.028	.038		-.318		-.341				.021	.251		.534		.379				7
8	.066	.125		-.311		-.325				.234			.568		.369				8
9	-.277	-.253		-.302						.330	.400		.498						9
10	-.227	-.277		-.293						.437	.559								10
11	-.289	-.313								.466	.572								11
12	-.300	-.304								.413	.490								12
13		-.259																	13
							α = 00°				δ = 30°								
1	.350	.308	.316	.313	.329	.334	-.294												1
2	.076	.055	.052	.050	.042	.035	-.338			.076	.060	.041	.040	-.002	.026	.841			2
3	.042	.031	.027	.027	.014	.025	-.397			.038		.018	.009	.003	.326	.835			3
4	.053	.024	.014	.005	-.002	.124	-.420			.049	.018	-.007	.453	.356	.562	.683			4
5	.040	.023	.003	.329	.046	-.373	-.424			.017	.009	.077		.460	.604	.627			5
6	.024	.006	.033	-.366		-.376				.030	.144	.529	.475		.809				6
7	.032	.051		-.393		-.405				.284	.496		.668		.751				7
8	.072	.207		-.378		-.375				.387			.785		.645				8
9	-.362	-.319		-.358						.420	.508		.688						9
10	-.315	-.362		-.298						.510	.808								10
11	-.371	-.373								.603	.939								11
12	-.286	-.350								.550	.758								12
13		-.273																	13
							α = 03°				δ = 00°								
1	.348	.207	.249	.224	.240	.338	-.169												1
2	.005	-.047	-.094	-.155	-.182	-.234	-.189			.146	.151	.151	.159	.133	.143	.112			2
3	.007	-.028	-.026	-.058	-.079	-.102	-.180			.090		.089	.075	.095	.103	.106			3
4	.008	-.023	-.052	-.070	-.073	-.024	-.184			.095	.075	.062	.054	.034	.102	.101			4
5	-.020	-.027	-.050	-.030	-.048	-.014	-.182			.076	.060	.050		.102	.027	.114			5
6	-.011	-.037	-.036	-.059		-.100				.075	.027	.084	-.053		-.026				6
7	-.007	-.019		-.091		-.163				.065	.063		-.061		-.079				7
8	.014	-.010		-.081		-.149				.075			-.052		-.072				8
9	-.036	-.007		-.077						-.006	-.034		-.039						9
10	-.075	-.055		-.290						-.048	-.032								10
11	-.072	-.072								-.065	-.046								11
12	-.058	-.059								-.052	-.044								12
13		-.265																	13

Table 21 Continued

Pressure Coefficients on Delta Wing with Control

Configuration J1 M = 1.61 R = 4.2 x 10^6

Orif	Upper Surface at Station 1	2	3	4	5	6	7	8	9	Lower Surface at Station 1	2	3	4	5	6	7	8	9	Orif
							α = 06°			δ = 00°									
1	.320	.128	.158	.124	.105	.186	-.310												1
2	-.070	-.227	-.303	-.343	-.351	-.373	-.330			.213	.241	.244	.252	.224	.233	.178			2
3	-.048	-.080	-.083	-.116	-.274	-.326	-.332			.145		.173	.150	.162	.191	.204			3
4	-.033	-.072	-.095	-.125	-.093	-.268	-.337			.150	.130	.126	.123	.112	.197	.170			4
5	-.062	-.073	-.102	-.034	-.084	-.248	-.330			.125	.118	.112		.191	.107	.193			5
6	-.055	-.081	-.077	-.112		-.256				.131	.081	.147	.010		.055				6
7	-.051	-.059		-.136		-.248				.113	.116		-.001		-.004				7
8	-.001	-.013		-.123		-.218				.107			.005		.012				8
9	-.079	-.046		-.116						.034	.004		.018						9
10	-.100	-.086		-.293						-.018	-.001								10
11	-.105	-.112								-.022	.007								11
12	-.093	-.097								-.005	.001								12
13		-.280																	13
							α = 06°			δ = 10°									
1	.327	.135	.169	.124	.105	.189	-.316												1
2	-.059	-.223	-.299	-.339	-.347	-.373	-.366			.218	.246	.247	.255	.224	.232	.480			2
3	-.040	-.075	-.078	-.112	-.271	-.327	-.390			.154		.172	.147	.162	.187	.416			3
4	-.026	-.067	-.091	-.117	-.092	-.266	-.397			.161	.132	.129	.124	.106	.193	.351			4
5	-.055	-.067	-.098	-.017	-.083	-.297	-.388			.130	.124	.111		.190	.388	.306			5
6	-.048	-.076	-.072	-.216		-.330				.143	.086	.146	.251		.277				6
7	-.044	-.052		-.240		-.327				.118	.121		.262		.237				7
8	.006	-.003		-.232		-.303				.118			.282		.232				8
9	-.184	-.144		-.217						.221	.240		.278						9
10	-.168	-.185		-.285						.229	.249								10
11	-.209	-.219								.247	.259								11
12	-.212	-.208								.231	.243								12
13		-.269																	13
							α = 06°			δ = 30°									
1	.321	.136	.166	.128	.109	.193	-.087												1
2	-.048	-.224	-.301	-.337	-.344	-.367	-.430			.208	.240	.245	.253	.221	.303	1.191			2
3	-.044	-.080	-.079	-.119	-.267	-.315	-.439			.145		.173	.147	.159	.630	1.044			3
4	-.030	-.073	-.090	-.111	-.088	-.197	-.444			.157	.125	.129	.627	.586	.664	.871			4
5	-.060	-.071	-.097	.434	-.079	-.413	-.432			.122	.121	.516		.635	.715	.737			5
6	-.056	-.078	-.056	-.378		-.432				.138	.533	.583	.655		1.052				6
7	-.048	-.024		-.392		-.428				.499	.573		.870		.995				7
8	.017	.168		-.377		-.381				.560			.987		.807				8
9	-.377	-.290		-.331						.583	.566		.834						9
10	-.325	-.364		-.309						.691	.660								10
11	-.388	-.353								.805	.800								11
12	-.314	-.310								.700	.735								12
13		-.288																	13
							α = 09°			δ = 00°									
1	.290	.079	.085	.042	-.051	-.023	-.367												1
2	-.140	-.328	-.386	-.413	-.421	-.446	-.398			.292	.318	.319	.329	.302	.310	.235			2
3	-.071	-.120	-.143	-.334	-.379	-.414	-.421			.211		.249	.219	.233	.261	.259			3
4	-.060	-.112	-.126	-.188	-.352	-.365	-.429			.220	.204	.192	.188	.178	.257	.220			4
5	-.093	-.106	-.134	-.043	-.210	-.350	-.416			.196	.184	.176		.269	.158	.228			5
6	-.083	-.118	-.102	-.174		-.363				.190	.142	.204	.058		.097				6
7	-.076	-.097		-.194		-.376				.163	.174		.047		.049				7
8	-.011	-.009		-.177		-.330				.146			.056		.066				8
9	-.100	-.052		-.167						.052	-.044		.069						9
10	-.110	-.115		-.307						.024	.037								10
11	-.123	-.147								.022	.056								11
12	-.116	-.128								.042	.049								12
13		-.282																	13
							α = 12°			δ = 00°									
1	.254	.011	-.010	-.044	-.164	-.182	-.397												1
2	-.255	-.403	-.435	-.457	-.468	-.474	-.424			.355	.384	.389	.396	.371	.376	.267			2
3	-.109	-.193	-.303	-.403	-.430	-.456	-.441			.272		.310	.287	.296	.341	.289			3
4	-.101	-.179	-.218	-.276	-.413	-.425	-.436			.265	.265	.260	.249	.252	.327	.269			4
5	-.133	-.158	-.173	-.038	-.276	-.391	-.419			.255	.245	.240		.344	.191	.257			5
6	-.119	-.147	-.130	-.252		-.396				.249	.198	.262	.076		.126				6
7	-.112	-.118		-.268		-.413				.208	.224		.067		.080				7
8	-.046	.003		-.261		-.364				.169			.073		.097				8
9	-.101	-.052		-.252						.052	.068		.086						9
10	-.117	-.109		-.329						.042	.048								10
11	-.133	-.141								.040	.065								11
12	-.126	-.122								.061	.060								12
13		-.285																	13

Table 21 Continued

Pressure Coefficients on Delta Wing with Control

Configuration J1 M = 1.61 R = 4.2×10^6

Orif	Upper Surface at Station 1	2	3	4	5	6	7	8	9	Lower Surface at Station 1	2	3	4	5	6	7	8	9	Orif
							α = 12°			δ = 10°									
1	.248	.002	-.013	-.045	-.155	-.178	-.356												1
2	-.261	-.411	-.438	-.457	-.458	-.468	-.415			.348	.380	.393	.402	.374	.378	.747			2
3	-.114	-.198	-.297	-.398	-.420	-.449	-.422			.264		.310	.290	.311	.338	.578			3
4	-.106	-.186	-.214	-.269	-.403	-.414	-.419			.256	.261	.262	.249	.256	.323	.486			4
5	-.136	-.162	-.171	.016	-.261	-.424	-.415			.248	.240	.240		.345	.654	.462			5
6	-.125	-.148	-.122	-.321		-.416				.241	.192	.263	.466		.452				6
7	-.118	-.120		-.340		-.409				.200	.218		.461		.469				7
8	-.051	.005		-.338		-.393				.165			.498		.442				8
9	-.237	-.185		-.320						.368	.405		.465						9
10	-.225	-.244		-.330						.411	.440								10
11	-.273	-.277								.426	.448								11
12	-.280	-.262								.387	.421								12
13		-.258																	13
							α = 12°			δ = 20°									
1	.251	.002	-.015	-.047	-.159	-.175	-.076												1
2	-.260	-.413	-.443	-.461	-.465	-.456	-.438			.351	.379	.387	.400	.371	.379	1.242			2
3	-.113	-.200	-.301	-.403	-.425	-.449	-.425			.266		.306	.285	.304	.347	.865			3
4	-.106	-.187	-.217	-.268	-.408	-.389	-.424			.260	.261	.260	.729	.247	.841	.731			4
5	-.136	-.166	-.173	.590	-.241	-.449	-.420			.251	.239	.234		.728	1.061	.651			5
6	-.125	-.151	-.117	-.379		-.438				.242	.189	.688	.749		.937				6
7	-.118	-.123		-.393		-.422				.210	.681		.884		.821				7
8	-.031	.283		-.394		-.411				.642			.884		.712				8
9	-.320	-.245		-.387						.684	.700		.725						9
10	-.298	-.333		-.339						.780	.842								10
11	-.354	-.360								.787	.858								11
12	-.340	-.339								.634	.705								12
13		-.259																	13
							α = 12°			δ = 30°									
1	.244	-.006	-.021	-.051	-.163	-.206	.058												1
2	-.268	-.420	-.448	-.463	-.468	-.456	-.440			.343	.370	.384	.392	.362	.633	1.051			2
3	-.124	-.207	-.308	-.409	-.429	-.450	-.433			.257		.301	.385	.333	.863	1.093			3
4	-.113	-.195	-.222	-.266	-.412	-.372	-.432			.251	.251	.251	.813	.739	.894	.903			4
5	-.146	-.172	-.177	.653	-.224	-.448	-.423			.241	.231	.708		.834	.964	.743			5
6	-.132	-.159	-.124	-.426		-.438				.233	.701	.775	.817		1.250				6
7	-.123	-.130		-.434		-.433				.652	.760		.978		1.070				7
8	-.049	.200		-.416		-.427				.749			1.060		.865				8
9	-.394	-.289		-.380						.769	.757		.879						9
10	-.375	-.406		-.353						.862	.887								10
11	-.417	-.395								.872	1.006								11
12	-.347	-.341								.709	.848								12
13		-.315																	13
							α = 15°			δ = 00°									
1	.212	-.056	-.146	-.147	-.268	-.292	-.338												1
2	-.352	-.417	-.412	-.408	-.421	-.424	-.400			.441	.468	.466	.471	.463	.487	.369			2
3	-.139	-.317	-.372	-.386	-.402	-.410	-.410			.347		.402	.413	.434	.462	.413			3
4	-.131	-.289	-.360	-.353	-.400	-.375	-.388			.336	.346	.384	.370	.386	.432	.352			4
5	-.158	-.136	-.355	.030	-.375	-.406	-.346			.333	.362	.379		.483	.313	.314			5
6	-.147	-.162	-.330	-.338		-.419				.354	.322	.376	.205		.218				6
7	-.141	-.141		-.359		-.396				.319	.345		.192		.226				7
8	-.067	.029		-.348		-.356				.255			.196		.222				8
9	-.136	-.079		-.338						.149	.183		.218						9
10	-.153	-.159		-.345						.154	.167								10
11	-.172	-.195								.159	.187								11
12	-.180	-.177								.176	.178								12
13		-.287																	13
							α = -03°			δ = 00°									
1	.318	.314	.235	.268	.290	.293	-.161												1
2	.120	.122	.139	.153	.148	.153	.244			.007	-.042	-.093	-.123	-.165	-.219	-.139			2
3	.074	.078	.105	.077	.091	.110	.134			-.007		-.035	-.055	-.063	-.108	-.163			3
4	.075	.055	.067	.045	.053	.141	.135			-.010	-.018	-.048	-.051	-.089	-.054	-.183			4
5	.080	.064	.042	-.030	.096	.097	.141			-.030	-.035	-.054		-.031	-.057	-.154			5
6	.060	.040	.053	.015		-.020				-.015	-.061	-.007	-.094		-.121				6
7	.052	.059		-.047		-.071				-.018	-.024		-.110		-.139				7
8	.011	-.011		-.048		-.042				.042			-.096		-.128				8
9	.022	.051		-.042						-.059	-.069		-.072						9
10	-.049	-.028		-.305						-.097	-.064								10
11	-.038	-.049								-.105	-.076								11
12	-.015	-.030								-.096	-.075								12
13		-.283																	13

Table 21 Continued

Pressure Coefficients on Delta Wing with Control

Configuration J1 M = 1.61 R = 4.2×10^6

Orif	Upper Surface at Station 1	2	3	4	5	6	7	8	9	Lower Surface at Station 1	2	3	4	5	6	7	8	9	Orif
								$\alpha = -06°$				$\delta = 00°$							
1	.283	.284	.140	.155	.199	.146	-.245												1
2	.197	.206	.232	.242	.243	.233	.327			-.063	-.237	-.288	-.314	-.327	-.363	-.318			2
3	.137	.150	.178	.151	.153	.189	.270			-.043		-.091	-.126	-.265	-.327	-.350			3
4	.137	.114	.130	.110	.126	.221	.265			-.050	-.065	-.091	-.094	-.122	-.276	-.364			4
5	.137	.120	.099	-.027	.155	.217	.262			-.065	-.077	-.101		-.093	-.260	-.344			5
6	.120	.097	.107	.121		.120				-.055	-.095	-.046	-.176		-.297				6
7	.105	.108		.065		.045				-.050	-.060		-.183		-.282				7
8	.044	-.005		.059		.059				.035			-.166		-.255				8
9	.107	.116		.079						-.128	-.233		-.156						9
10	.025	.051		-.289						-.137	-.125								10
11	.029	.046								-.158	-.146								11
12	.065	.063								-.162	-.146								12
13		-.287																	13
								$\alpha = -06°$				$\delta = 10°$							
1	.291	.296	.151	.158	.202	.151	-.248												1
2	.212	.222	.247	.249	.245	.244	.118			-.050	-.232	-.284	-.319	-.327	-.368	-.302			2
3	.146	.166	.189	.158	.159	.198	.120			-.032		-.085	-.125	-.267	-.327	-.287			3
4	.150	.129	.141	.118	.134	.231	.114			-.036	-.055	-.084	-.087	-.122	-.263	-.279			4
5	.150	.134	.111	-.024	.163	.027	.124			-.059	-.068	-.095		-.092	-.230	-.267			5
6	.134	.112	.117	-.043		-.054				-.042	-.085	-.041	-.052		-.212				6
7	.121	.126		-.090		-.104				-.038	-.045		-.029		-.178				7
8	.073	.007		-.097		-.099				.065			-.003		-.151				8
9	-.048	-.011		-.081						.027	.020		-.017						9
10	-.072	-.081		-.277						-.013	.037								10
11	-.101	-.108								-.003	.030								11
12	-.083	-.084								.000	.017								12
13		-.261																	13
								$\alpha = -06°$				$\delta = 20°$							
1	.281	.282	.134	.146	.186	.137	-.310												1
2	.203	.211	.232	.239	.238	.238	-.099			-.064	-.248	-.301	-.333	-.342	-.376	-.232			2
3	.145	.152	.177	.149	.151	.195	-.053			-.044		-.099	-.138	-.284	-.331	-.097			3
4	.134	.116	.128	.108	.126	.226	-.071			-.051	-.069	-.099	.077	-.137	-.180	-.043			4
5	.141	.121	.100	.072	.158	-.175	-.087			-.070	-.081	-.110		-.057	-.129	.015			5
6	.121	.101	.110	-.212		-.216				-.056	-.103	.091	.105		-.008				6
7	.113	.121		-.252		-.265				-.052	.169		.247		.064				7
8	.105	.116		-.253		-.259				.174			.293		.082				8
9	-.213	-.154		-.241						.196	.224		.269						9
10	-.180	-.229		-.290						.248	.318								10
11	-.244	-.262								.272	.344								11
12	-.251	-.252								.253	.298								12
13		-.277																	13
								$\alpha = -06°$				$\delta = 30°$							
1	.281	.284	.134	.143	.188	.142	.057												1
2	.208	.215	.239	.245	.244	.243	-.259			-.063	-.252	-.300	-.334	-.342	-.043	.077			2
3	.147	.155	.182	.157	.157	.204	-.200			-.043		-.097	-.106	-.140	.030	.326			3
4	.140	.119	.132	.118	.132	.239	-.302			-.048	-.069	-.100	.158	-.059	.071	.338			4
5	.144	.125	.107	.177	.164	-.317	-.319			-.069	-.081	-.071		.085	.048	.355			5
6	.126	.106	.122	-.327		-.335				-.054	.139	.309	.230		.132				6
7	.120	.137		-.356		-.367				.064	.306		.452		.215				7
8	.149	.207		-.354		-.363				.290			.527		.183				8
9	-.338	-.237		-.347						.327	.315		.510						9
10	-.296	-.341		-.298						.506	.461								10
11	-.348	-.361								.619	.572								11
12	-.351	-.344								.542	.526								12
13		-.263																	13
								$\alpha = -09°$				$\delta = 00°$							
1	.254	.226	.035	.010	.064	.009	-.228												1
2	.283	.285	.315	.310	.314	.306	.356			-.142	-.325	-.383	-.387	-.412	-.436	-.295			2
3	.211	.213	.251	.223	.229	.254	.298			-.079		-.215	-.313	-.367	-.409	-.309			3
4	.206	.178	.194	.172	.198	.276	.293			-.084	-.116	-.132	-.191	-.333	-.379	-.312			4
5	.194	.187	.161	-.068	.220	.242	.278			-.102	-.128	-.146		-.178	-.294	-.259			5
6	.186	.162	.162	.131		.126				-.088	-.122	-.081	-.189		-.303				6
7	.169	.170		.060		.049				-.080	-.105		-.191		-.273				7
8	.098	.001		.055		.087				.029			-.163		-.256				8
9	.121	.146		.069						-.118	-.116		-.126						9
10	.040	.048		-.307						-.122	-.109								10
11	.054	.035								-.143	-.119								11
12	.081	.054								-.133	-.110								12
13		-.281																	13

Table 21 Concluded

Pressure Coefficients on Delta Wing with Control

Configuration J1 M = 1.61 R = 4.2×10^6

Orif	Upper Surface at Station 1	2	3	4	5	6	7	8	9	Lower Surface at Station 1	2	3	4	5	6	7	8	9	Orif
							$\alpha = -12°$			$\delta = 00°$									
1	.183	.107	-.067	-.157	-.084	-.129	-.202												1
2	.363	.374	.402	.383	.381	.372	.468			-.278	-.376	-.422	-.429	-.460	-.471	-.412			2
3	.278	.288	.320	.306	.316	.339	.419			-.118		-.291	-.300	-.417	-.469	-.409			3
4	.285	.252	.274	.252	.285	.354	.393			-.125	-.157	-.270	-.211	-.341	-.447	-.408			4
5	.261	.261	.236	-.095	.306	.359	.359			-.132	-.137	-.257		-.276	-.407	-.388			5
6	.270	.238	.238	.253		.250				-.125	-.150	-.199	-.297		-.408				6
7	.246	.243		.192		.195				-.117	-.124		-.297		-.391				7
8	.163	.017		.195		.220				.023			-.281		-.378				8
9	.221	.243		.216						-.192	-.184		-.266						9
10	.166	.180		-.297						-.165	-.175								10
11	.160	.173								-.212	-.201								11
12	.188	.194								-.220	-.195								12
13		-.289																	13
							$\alpha = -12°$			$\delta = 10°$									
1	.187	.111	-.066	-.154	-.084	-.126	-.219												1
2	.362	.375	.404	.388	.383	.375	.188			-.278	-.378	-.425	-.433	-.461	-.477	-.436			2
3	.280	.291	.323	.309	.316	.342	.208			-.118		-.292	-.301	-.413	-.470	-.429			3
4	.286	.257	.277	.259	.286	.357	.222			-.120	-.158	-.270	-.203	-.337	-.443	-.421			4
5	.262	.264	.241	-.088	.305	.106	.230			-.130	-.137	-.257		-.261	-.399	-.400			5
6	.272	.242	.241	.026		.032				-.120	-.151	-.201	-.224		-.398				6
7	.248	.244		-.027		-.027				-.112	-.122		-.216		-.381				7
8	.164	.015		-.032		-.010				.037			-.177		-.354				8
9	.010	.050		-.014						-.028	-.032		-.192						9
10	-.030	-.032		-.301						-.054	-.017								10
11	-.047	-.046								-.068	-.032								11
12	-.022	-.020								-.068	-.039								12
13		-.281																	13
							$\alpha = -12°$			$\delta = 20°$									
1	.186	.106	-.073	-.169	-.095	-.141	-.272												1
2	.363	.375	.404	.388	.383	.374	-.043			-.284	-.389	-.440	-.448	-.456	-.384	-.385			2
3	.281	.290	.323	.309	.314	.338	.018			-.121		-.306	-.339	-.421	-.359	-.328			3
4	.287	.257	.274	.253	.284	.356	.034			-.126	-.165	-.281	-.190	-.365	-.306	-.286			4
5	.261	.262	.239	-.070	.305	-.113	.050			-.140	-.145	-.270		-.235	-.334	-.259			5
6	.270	.245	.241	-.167		-.158				-.127	-.157	-.197	-.155		-.297				6
7	.250	.248		-.210		-.211				-.117	.055		-.150		-.264				7
8	.179	.100		-.211		-.205				.121			-.120		-.260				8
9	-.172	-.110		-.198						.158	.161		-.104						9
10	-.149	-.188		-.332						.164	.266								10
11	-.194	-.220								.175	.286								11
12	-.203	-.212								.178	.268								12
13		-.294																	13
							$\alpha = -12°$			$\delta = 30°$									
1	.186	.105	-.073	-.165	-.092	-.136	-.312												1
2	.362	.374	.402	.386	.381	.375	-.203			-.280	-.384	-.432	-.418	-.340	-.222	-.154			2
3	.282	.288	.324	.309	.314	.342	-.116			-.124		-.311	-.324	-.311	-.186	-.061			3
4	.286	.255	.276	.256	.284	.358	-.125			-.122	-.163	-.270	-.114	-.270	-.149	.017			4
5	.263	.260	.243	-.009	.305	-.260	-.153			-.142	-.144	-.264		-.149	-.179	.072			5
6	.266	.244	.242	-.282		-.276				-.125	-.146	.069	-.133		-.138				6
7	.247	.255		-.314		-.318				-.084	.205		-.114		-.107				7
8	.207	.214		-.314		-.323				.220			-.089		-.149				8
9	-.286	-.191		-.305						.273	.219		-.101						9
10	-.241	-.298		-.333						.388	.400								10
11	-.296	-.320								.428	.580								11
12	-.309	-.319								.373	.521								12
13		-.290																	13
							$\alpha = -15°$			$\delta = 00°$									
1		.042	-.118	-.252	-.157	-.216	-.187												1
2		.429	.441	.421	.430	.421	.473			-.339	-.393	-.417	-.410	-.430	-.426	-.327			2
3	.333	.345	.383	.390	.393	.420	.440			-.131		-.367	-.377	-.407	-.412	-.331			3
4	.342	.312	.363	.337	.371	.421	.395			-.132	-.239	-.375	-.341	-.401	-.389	-.315			4
5	.320	.342	.326	-.065	.382	.391	.358			-.151	-.137	-.368		-.355	-.347	-.252			5
6	.335	.336	.319	.282		.253				-.136	-.161	-.288	-.307		-.362				6
7	.321	.323		.200		.200				-.117	-.136		-.325		-.319				7
8	.176	.045		.194		.237				.020			-.309		-.309				8
9	.261	.282		.221						-.140	-.148		-.288						9
10	.193	.189		-.344						-.142	-.133								10
11	.191	.174								-.179	-.146								11
12	.224	.193								-.167	-.138								12
13		-.281																	13

Table 22

Pressure Coefficients on Delta Wing with Control

Configuration J2 M = 1.61 R = 4.2 x 10^6

Orif	Upper Surface at Station 1	2	3	4	5	6	7	8	9	Lower Surface at Station 1	2	3	4	5	6	7	8	9	Orif
							α = 00°				δ = 00°								
1	.343			.297	.300	.329	-.050												1
2	.062			.023	.014	.005	.065			.068		.030	.032	-.001	.002	-.006			2
3	.027			.000	-.015	-.001	.101			.032		.002	-.007	-.006	-.010	.003			3
4	.033			-.024	-.026	.061				.025		-.017	-.019	-.046	.019	-.014			4
5	.023			-.040	.009	.047	.067					-.026		.020	-.027	-.017			5
6	.016			.022		.015						.034	-.023		-.035				6
7	.011			.030		.003							-.030		-.048				7
8	.018			.035		.022							-.036		-.034				8
9	.025			.030									-.024						9
10	.013			-.313															10
11	.023																		11
12	.032																		12
							α = 00°				δ = 10°								
1	.338	.294	.309	.301	.308	.325	-.016												1
2	.057	.036	.034	.028	.024	.010	-.142			.062	.042	.030	.036	-.001	-.005	.290			2
3	.024	.011	.008	.007	-.005	.005	-.021			.025		.001	-.002	-.006	-.015	.238			3
4	.033	.007	-.004	-.019	-.019	.065				.027	.002	-.021	-.008	-.044	.017	.243			4
5	.024	.005	-.016	.010	.019	-.157	-.226			.000	-.004	-.022		.025	.216	.241			5
6	.013	-.015	-.003	-.170		-.171				.014	-.030	.039	.232		.272				6
7	.008	.005		-.166		-.200				.005	.003		.277		.229				7
8	.028	.030		-.154		-.168				.106			.286		.220				8
9	-.176	-.149		-.163						.225	.297		.296						9
10	-.125	-.146		-.313						.226	.313								10
11	-.164	-.166									.300								11
12	-.164	-.171									.280								12
13		-.301																	13
							α = 00°				δ = 20°								
1	.338	.296		.302	.304	.322	.105												1
2	.065	.038		.031	.026	.014	-.281			.063	.046	.026	.030	-.010	-.007	.508			2
3	.025	.011	.015	.008	-.005	.006	-.079			.024		.000	-.006	-.009	-.013	.586			3
4	.038	.009	-.002	-.015	-.020	.085				.034	.003	-.023	.347	-.049	.252	.591			4
5	.027	.007	-.017	.230	.023	-.291	-.359			-.002	.000	-.021		.354	.525	.550			5
6	.010	-.013	.009	-.289		-.289				.017	-.026	.440	.381		.763				6
7	.013	.028		-.299		-.317				.018	.406		.616		.650				7
8	.071	.186		-.284		-.292				.327			.744		.583				8
9	-.293	-.269		-.290						.371	.418		.637						9
10	-.216	-.273		-.337						.531	.634								10
11	-.292	-.287									.763								11
12	-.287	-.295									.614								12
13		-.326																	13
							α = 00°				δ = 30°								
1	.339	.299	.310	.302	.305	.321	.404												1
2	.062	.042	.035	.034	.028	.022	-.368			.064	.044	.028	.030	-.011	.053	.969			2
3	.027	.015	.010	.013	.000	.010	-.114			.026		.002	.021	.003	.395	.914			3
4	.040	.011	-.001	-.013	-.019	.109				.035	.004	-.011	.539	.408	.677	.829			4
5	.028	.009	-.013	.361	.024	-.388	-.422			.003	-.006	.326		.532	.963	.695			5
6	.011	-.009	.010	-.378		-.378				.018	.363	.571	.555		.956				6
7	.019	.031		-.393		-.396				.364	.529		.700		.872				7
8	.065	.160		-.378		-.380				.409			.794		.760				8
9	-.376	-.359		-.380						.466	.575		.703						9
10	-.316	-.370		-.346						.531	.892								10
11	-.382	-.379									1.023								11
12	-.372	-.386									.854								12
13		-.342																	13
							α = 03°				δ = 00°								
1	.337	.186	.236	.206	.274	.322	-.186												1
2	-.007	-.068	-.118	-.190	-.208	-.255	-.226			.132	.142	.148	.159	.132	.150	.126			2
3	-.022	-.046	-.044	-.075	-.092	-.133	-.114			.077		.084	.070	.092	.106	.139			3
4	-.005	-.042	-.067	-.086	-.092	-.034				.082	.057	.051	.049	.027	.099	.133			4
5	-.030	-.044	-.072	-.040	-.059	-.026	-.208			.055	.051	.030		.111	.046	.129			5
6	-.032	-.060	-.055	-.046		-.076				.067	.015	.077	.055		.066				6
7	-.030	-.038		-.035		-.091				.054	.051		.039		.044				7
8	.014	-.004		-.026		-.074				.078			.029		.051				8
9	-.022	.000		-.030						.058	.034		.047						9
10	-.019	-.005		-.308						.026	.048								10
11	-.026	-.010									.036								11
12	-.021	-.014									.035								12
13		-.300																	13

Table 22 Continued

Pressure Coefficients on Delta Wing with Control

Configuration J2 M = 1.61 R = 4.2×10^6

Orif	Upper Surface at Station 1	2	3	4	5	6	7	8	9		Lower Surface at Station 1	2	3	4	5	6	7	8	9	Orif
								α = 06°			δ = 00°									
1	.312	.112	.154	.112	.112	.169	-.333													1
2	-.080	-.250	-.329	-.364	-.373	-.398	-.354				.200	.225	.232	.240	.212	.221	.194			2
3	-.062	-.095	-.100	-.131	-.295	-.349	-.196				.132		.156	.139	.152	.182	.216			3
4	-.044	-.091	-.114	-.145	-.121	-.288					.138	.118	.114	.113	.096	.171	.216			4
5	-.078	-.088	-.118	-.049	-.101	-.268	-.340				.116	.105	.083		.186	.124	.211			5
6	-.067	-.100	-.096	-.103		-.233					.115	.067	.131	.110		.138				6
7	-.066	-.075		-.082		-.200					.096	.100		.091		.101				7
8	.003	-.007		-.063		-.150					.104			.076		.112				8
9	-.048	-.034		-.070							.077	.095		.095						9
10	-.043	-.032		-.322							.072	.084								10
11	-.052	-.043										.076								11
12	-.049	-.043										.075								12
13		-.309																		13
								α = 06°			δ = 10°									
1	.312	.114	.157	.117	.116	.173	-.305													1
2	-.080	-.247	-.325	-.362	-.363	-.392	-.405				.199	.225	.235	.244	.213	.222	.579			2
3	-.061	-.093	-.097	-.133	-.288	-.346	-.180				.130		.155	.139	.150	.179	.485			3
4	-.043	-.088	-.111	-.140	-.116	-.287					.139	.119	.114	.124	.097	.170	.491			4
5	-.077	-.087	-.118	.057	-.099	-.326	-.400				.112	.105	.085		.191	.476	.450			5
6	-.066	-.096	-.085	-.239		-.361					.119	.069	.142	.447		.525				6
7	-.063	-.060		-.238		-.322					.097	.100		.477		.456				7
8	.019	.075		-.224		-.281					.173			.485		.433				8
9	-.209	-.197		-.222							.363	.439		.467						9
10	-.169	-.197		-.330							.417	.464								10
11	-.218	-.211										.454								11
12	-.208	-.217										.424								12
13		-.313																		13
								α = 06°			δ = 20°									
1	.316	.119	.160	.120	.122	.175	.249													1
2	-.069	-.231	-.308	-.337	-.345	-.370	-.426				.203	.230	.233	.245	.213	.220	1.247			2
3	-.052	-.084	-.082	-.121	-.272	-.325	-.099				.137		.161	.139	.153	.178	.857			3
4	-.035	-.077	-.095	-.118	-.104	-.251					.148	.117	.119	.548	.107	.615	.776			4
5	-.068	-.077	-.102	.401	-.088	-.417	-.426				.113	.111	.092		.557	.768	.662			5
6	-.060	-.087	-.063	-.337		-.421					.126	.095	.542	.562		1.016				6
7	-.055	-.030		-.368		-.394					.183	.531		.711		.856				7
8	.023	.169		-.364		-.375					.502			.829		.737				8
9	-.322	-.312		-.360							.539	.538		.724						9
10	-.274	-.322		-.343							.667	.697								10
11	-.342	-.353										.827								11
12	-.331	-.353										.724								12
13		-.322																		13
								α = 06°			δ = 30°									
1	.315	.113	.155	.113	.117	.181	.028													1
2	-.079	-.249	-.325	-.361	-.367	-.383	-.473				.199	.222	.229	.238	.210	.543	.943			2
3	-.059	-.093	-.096	-.136	-.286	-.334	-.109				.129		.153	.353	.191	.714	1.118			3
4	-.042	-.088	-.110	-.133	-.117	-.210					.142	.109	.228	.667	.617	.736	.958			4
5	-.073	-.084	-.116	.454	-.098	-.467	-.464				.112	.106	.521		.678	.772	.763			5
6	-.068	-.095	-.077	-.418		-.461					.125	.551	.599	.699		1.044				6
7	-.063	-.040		-.440		-.445					.548	.589		.923		1.104				7
8	-.005	.141		-.436		-.445					.575			1.074		.909				8
9	-.402	-.396		-.423							.588	.578		.929						9
10	-.371	-.408		-.367							.666	.644								10
11	-.413	-.407										.767								11
12	-.374	-.359										.723								12
13		-.334																		13
								α = 09°			δ = 00°									
1	.274	.046	.067	.018	-.064	-.052	-.306													1
2	-.166	-.355	-.411	-.436	-.443	-.463	-.427				.276	.304	.309	.321	.298	.310	.279			2
3	-.096	-.145	-.198	-.354	-.402	-.432	-.220				.193		.237	.211	.227	.259	.301			3
4	-.080	-.134	-.151	-.210	-.380	-.383					.204	.186	.183	.180	.171	.249	.303			4
5	-.113	-.131	-.156	-.062	-.239	-.365	-.425				.176	.170	.149		.272	.212	.292			5
6	-.104	-.144	-.131	-.175		-.357					.177	.129	.194	.192		.232				6
7	-.101	-.119		-.159		-.342					.146	.155		.169		.194				7
8	-.023	-.001		-.137		-.300					.141			.150		.204				8
9	-.095	-.082		-.140							.124	.162		.178						9
10	-.080	-.089		-.341							.140	.158								10
11	-.091	-.101										.141								11
12	-.095	-.096										.148								12
13		-.319																		13

Table 22 Continued

Pressure Coefficients on Delta Wing with Control

Configuration J2 M = 1.61 R = 4.2×10^6

Orif	Upper Surface at Station 1	2	3	4	5	6	7	8	9		Lower Surface at Station 1	2	3	4	5	6	7	8	9	Orif
							α = 12°				δ = 00°									
1	.247	-.017	-.031	-.075	-.184	-.206	-.291													1
2	-.264	-.413	-.454	-.476	-.483	-.492	-.455				.344	.372	.379	.390	.355	.367	.334			2
3	-.121	-.206	-.346	-.420	-.450	-.473	-.227				.260		.295	.279	.296	.326	.349			3
4	-.112	-.196	-.220	-.310	-.436	-.449					.253	.249	.246	.241	.243	.316	.373			4
5	-.146	-.180	-.201	-.053	-.300	-.411	-.435				.244	.233	.213		.342	.273	.344			5
6	-.131	-.166	-.168	-.267		-.400					.236	.185	.253	.250		.288				6
7	-.125	-.136		-.265		-.399					.194	.208		.223		.257				7
8	-.043	.005		-.239		-.363					.169			.204		.264				8
9	-.110	-.099		-.244							.167	.211		.231						9
10	-.096	-.107		-.367							.200	.215								10
11	-.121	-.121										.193								11
12	-.115	-.113										.199								12
13		-.320																		13
							α = 12°				δ = 10°									
1	.244	-.019	-.031	-.075	-.185	-.210	-.137													1
2	-.268	-.433	-.465	-.486	-.488	-.505	-.458				.343	.372	.382	.390	.356	.366	.837			2
3	-.126	-.210	-.352	-.431	-.453	-.482	-.174				.260		.294	.276	.292	.320	.661			3
4	-.117	-.198	-.220	-.302	-.435	-.448					.252	.251	.245	.365	.236	.310	.643			4
5	-.144	-.183	-.202	.310	-.292	-.444	-.433				.243	.231	.214		.387	.821	.569			5
6	-.134	-.167	-.162	-.331		-.422					.234	.182	.359	.666		.753				6
7	-.130	-.134		-.335		-.419					.194	.355		.720		.652				7
8	-.031	.199		-.315		-.400					.390			.681		.595				8
9	-.215	-.219		-.308							.575	.638		.600						9
10	-.190	-.210		-.378							.638	.682								10
11	-.243	-.227										.648								11
12	-.230	-.227										.564								12
13		-.330																		13
							α = 12°				δ = 20°									
1	.241	-.021	-.032	-.077	-.185	-.207	.290													1
2	-.272	-.439	-.470	-.489	-.493	-.490	-.465				.338	.368	.377	.387	.353	.366	1.111			2
3	-.123	-.214	-.354	-.424	-.456	-.478	-.146				.257		.292	.274	.290	.736	.928			3
4	-.119	-.200	-.221	-.302	-.439	-.400					.249	.248	.243	.757	.585	.850	.831			4
5	-.149	-.185	-.202	.614	-.286	-.467	-.441				.242	.228	.502		.776	.973	.673			5
6	-.137	-.171	-.162	-.394		-.443					.232	.559	.734	.763		1.115				6
7	-.131	-.134		-.399		-.440					.506	.719		.935		.950				7
8	-.047	.251		-.386		-.432					.705			.973		.791				8
9	-.315	-.323		-.384							.720	.726		.800						9
10	-.285	-.317		-.392							.834	.871								10
11	-.345	-.337										.931								11
12	-.333	-.338										.777								12
13		-.351																		13
							α = 12°				δ = 30°									
1	.244	-.015	-.028	-.065	-.170	-.280	.162													1
2	-.261	-.417	-.445	-.466	-.470	-.465	-.445				.341	.370	.376	.385	.351	.724	.972			2
3	-.116	-.199	-.333	-.410	-.434	-.461	-.139				.260		.291	.683	.644	.879	1.115			3
4	-.111	-.188	-.204	-.270	-.413	-.384					.252	.248	.577	.847	.789	.928	.960			4
5	-.141	-.173	-.188	.684	-.240	-.451	-.426				.241	.233	.738		.868	.999	.745			5
6	-.130	-.158	-.148	-.408		-.430					.262	.736	.809	.847		1.296				6
7	-.122	-.127		-.411		-.429					.703	.794		1.003		1.165				7
8	-.059	.185		-.396		-.426					.781			1.100		.946				8
9	-.359	-.366		-.387							.796	.788		.939						9
10	-.342	-.362		-.371							.865	.903								10
11	-.384	-.367										1.037								11
12	-.368	-.352										.904								12
13		-.337																		13
							α = 15°				δ = 00°									
1	.204	-.083	-.155	-.171	-.284	-.306	-.228													1
2	-.365	-.451	-.457	-.441	-.452	-.449	-.416				.420	.448	.446	.444	.425	.460	.409			2
3	-.149	-.305	-.403	-.410	-.437	-.435	-.232				.323		.368	.386	.404	.433	.434			3
4	-.141	-.292	-.384	-.394	-.432	-.400					.307	.317	.350	.343	.356	.419	.454			4
5	-.172	-.158	-.379	.032	-.409	-.430	-.384				.314	.323	.326		.458	.373	.436			5
6	-.162	-.186	-.345	-.377		-.440					.317	.288	.348	.353		.382				6
7	-.152	-.163		-.384		-.425					.283	.308		.328		.379				7
8	-.056	.048		-.377		-.390					.239			.301		.371				8
9	-.134	-.124		-.370							.252	.309		.332						9
10	-.132	-.137		-.398							.295	.315								10
11	-.154	-.163										.290								11
12	-.150	-.154										.298								12
13		-.335																		13

Table 22 Continued

Pressure Coefficients on Delta Wing with Control

Configuration J2 M = 1.61 R = 4.2×10^6

Orif	Upper Surface at Station 1	2	3	4	5	6	7	8	9	Lower Surface at Station 1	2	3	4	5	6	7	8	9	Orif
							$\alpha = -03°$			$\delta = 00°$									
1	.324	.312	.244	.260	.300	.278	-.164												1
2	.118	.117	.132	.135	.131	.129	.136			.007	-.044	-.097	-.117	-.171	-.223	-.142			2
3	.069	.075	.092	.063	.073	.092	.120			-.008		-.044	-.069	-.075	-.110	-.149			3
4	.075	.050	.055	.031	.033	.126				-.007	-.020	-.062	-.060	-.106	-.068	-.183			4
5	.078	.058	.028	-.026	.076	.083	.106			-.032	-.040	-.074		-.042	-.050	-.141			5
6	.060	.031	.036	.048		.018				-.015	-.065	-.019	-.016		-.063				6
7	.052	.050		.038		.015				-.023	-.027		-.047		-.065				7
8	.032	.022		.015		.046				.048			-.044		-.043				8
9	.042	.067		.034						-.006	.013		-.020						9
10	.031	.053		-.329						-.021	.009								10
11	.048	.050									-.015								11
12	.057	.044									-.007								12
13		-.302																	13
							$\alpha = -06°$			$\delta = 00°$									
1	.280	.280	.135	.147	.204	.137	-.281												1
2	.183	.194	.216	.223	.216	.218	.252			-.068	-.245	-.293	-.329	-.337	-.364	-.370			2
3	.121	.138	.163	.131	.129	.177	.249			-.051		-.103	-.137	-.273	-.327	-.392			3
4	.126	.100	.112	.089	.101	.203				-.057	-.075	-.103	-.104	-.145	-.281	-.400			4
5	.125	.108	.083	-.034	.136	.215	.280			-.076	-.087	-.120		-.108	-.272	-.377			5
6	.109	.084	.085	.153		.186				-.063	-.106	-.060	-.133		-.279				6
7	.096	.092		.151		.158				-.060	-.069		-.134		-.237				7
8	.065	.019		.146		.166				.027			-.125		-.178				8
9	.126	.140		.147						-.088	-.065		-.120						9
10	.114	.135		-.313						-.073	-.075								10
11	.121	.146									-.103								11
12	.134	.137									-.101								12
13		-.304																	13
							$\alpha = -06°$			$\delta = 10°$									
1	.278	.280	.138	.149	.207	.142	-.312												1
2	.183	.193	.218	.226	.222	.224	.007			-.065	-.240	-.287	-.322	-.329	-.357	-.295			2
3	.123	.137	.165	.138	.137	.185	.175			-.050		-.097	-.130	-.264	-.317	-.257			3
4	.124	.103	.117	.096	.110	.211				-.057	-.071	-.096	-.064	-.132	-.262	-.211			4
5	.126	.109	.089	.016	.145	-.030	.073			-.076	-.081	-.112		-.099	-.201	-.204			5
6	.106	.089	.092	-.077		-.051				-.062	-.104	-.031	.050		-.067				6
7	.096	.099		-.076		-.080				-.060	-.037		.112		-.010				7
8	.068	.072		-.072		-.060				.076			.123		.023				8
9	-.105	-.081		-.077						.114	.181		.130						9
10	-.060	-.075		-.304						.117	.182								10
11	-.099	-.089									.166								11
12	-.091	-.093									.153								12
13		-.302																	13
							$\alpha = -06°$			$\delta = 20°$									
1	.274	.278	.134	.141	.200	.133	-.213												1
2	.187	.196	.221	.228	.227	.231	-.180			-.069	-.249	-.299	-.329	-.339	-.353	-.162			2
3	.125	.142	.167	.143	.144	.194	.056			-.051		-.101	-.135	-.272	-.291	.007			3
4	.127	.106	.119	.101	.116	.219				-.058	-.072	-.099	.162	-.134	-.110	.083			4
5	.129	.113	.091	.173	.154	-.206	-.150			-.076	-.085	-.117		.183	-.056	.122			5
6	.108	.090	.104	-.226		-.212				-.063	-.106	.244	.224		.149				6
7	.099	.114		-.236		-.237				-.060	.244		.428		.263				7
8	.133	.176		-.226		-.228				.240			.495		.272				8
9	-.253	-.228		-.234						.302	.282		.441						9
10	-.175	-.222		-.319						.441	.453								10
11	-.244	-.240									.531								11
12	-.244	-.249									.471								12
13		-.316																	13
							$\alpha = -06°$			$\delta = 30°$									
1	.270	.273	.129	.142	.196	.181	.186												1
2	.191	.202	.226	.235	.233	.240	-.278			-.069	-.249	-.298	-.331	-.230	.055	.231			2
3	.125	.146	.175	.151	.154	.210	-.010			-.051		-.095	-.046	-.056	.141	.413			3
4	.132	.110	.126	.110	.125	.240				-.054	-.072	-.104	.134	-.009	.178	.460			4
5	.133	.118	.100	.159	.161	-.296	-.288			-.073	-.083	.191		.105	.141	.433			5
6	.113	.097	.113	-.301		-.288				-.060	.206	.314	.192		.193				6
7	.105	.126		-.313		-.312				.207	.341		.326		.259				7
8	.142	.196		-.300		-.307				.319			.413		.237				8
9	-.321	-.299		-.310						.342	.344		.430						9
10	-.251	-.298		-.321						.514	.462								10
11	-.326	-.310									.599								11
12	-.313	-.321									.567								12
13		-.322																	13

Table 22 Continued

Pressure Coefficients on Delta Wing with Control

Configuration J2 $M = 1.61$ $R = 4.2 \times 10^6$

Orif	Upper Surface at Station 1	2	3	4	5	6	7	8	9	Lower Surface at Station 1	2	3	4	5	6	7	8	9	Orif
							$\alpha = -09^\circ$			$\delta = 00^\circ$									
1	.239	.208	.028	.005	.064	-.005	-.235												1
2	.264	.277	.305	.302	.302	.298	.327			-.165	-.347	-.402	-.409	-.427	-.453	-.331			2
3	.187	.200	.241	.215	.218	.247	.294			-.092		-.230	-.326	-.382	-.428	-.327			3
4	.191	.167	.185	.163	.188	.261				-.100	-.130	-.137	-.191	-.345	-.395	-.364			4
5	.182	.176	.153	-.050	.216	.273	.342			-.114	-.137	-.158		-.191	-.325	-.302			5
6	.171	.151	.150	.214		.233				-.105	-.132	-.087	-.156		-.323				6
7	.154	.144		.202		.211				-.096	-.113		-.170		-.286				7
8	.109	.029		.187		.227				.015			-.144		-.243				8
9	.154	.190		.197						-.088	-.072		-.118						9
10	.159	.181		-.341						-.093	-.079								10
11	.172	.187									-.103								11
12	.183	.179									-.093								12
13		-.323																	13
							$\alpha = -12^\circ$			$\delta = 00^\circ$									
1	.182	.102	-.071	-.159	-.089	-.137	-.195												1
2	.347	.359	.389	.375	.363	.360	.425			-.280	-.390	-.440	-.454	-.486	-.485	-.410			2
3	.259	.275	.312	.292	.297	.319	.357			-.131		-.304	-.333	-.444	-.476	-.406			3
4	.268	.241	.258	.232	.263	.334				-.134	-.165	-.272	-.237	-.354	-.461	-.405			4
5	.251	.244	.220	-.065	.284	.376	.451			-.148	-.151	-.257		-.272	-.421	-.371			5
6	.244	.222	.214	.314		.357				-.134	-.163	-.198	-.282		-.403				6
7	.222	.215		.304		.351				-.126	-.133		-.299		-.382				7
8	.164	.055		.319		.341				.001			-.276		-.370				8
9	.252	.282		.308						-.135	-.129		-.263						9
10	.268	.292		-.355						-.124	-.134								10
11	.278	.305									-.168								11
12	.282	.290									-.161								12
13		-.327																	13
							$\alpha = -12^\circ$			$\delta = 10^\circ$									
1	.182	.101	-.073	-.162	-.095	-.141	-.305												1
2	.347	.359	.387	.376	.364	.360	.098			-.280	-.394	-.450	-.465	-.491	-.491	-.437			2
3	.259	.275	.311	.292	.298	.323	.276			-.131		-.305	-.337	-.446	-.481	-.428			3
4	.268	.242	.258	.234	.262	.336				-.135	-.166	-.273	-.195	-.358	-.457	-.419			4
5	.254	.245	.222	-.063	.286	.089	.232			-.147	-.153	-.256		-.226	-.403	-.382			5
6	.247	.226	.215	.020		.068				-.121	-.162	-.199	-.203		-.365				6
7	.224	.218		.021		.039				-.125	-.112		-.171		-.325				7
8	.164	.056		.028		.061				.051			-.157		-.308				8
9	-.026	.009		.015						.056	.104		-.163						9
10	.024	.015		-.358						.027	.079								10
11	-.003	.010									.061								11
12	.010	.011									.053								12
13		-.325																	13
							$\alpha = -12^\circ$			$\delta = 20^\circ$									
1	.180	.100	-.066	-.152	-.092	-.135	-.331												1
2	.348	.359	.387	.378	.367	.365	-.108			-.269	-.376	-.426	-.438	-.428	-.309	-.276			2
3	.261	.275	.315	.290	.301	.327	.150			-.127		-.289	-.332	-.382	-.289	-.242			3
4	.269	.245	.260	.237	.267	.341				-.128	-.157	-.257	-.200	-.347	-.255	-.176			4
5	.256	.247	.224	-.024	.290	-.103	.036			-.140	-.141	-.243		-.236	-.270	-.183			5
6	.248	.231	.220	-.155		-.123				-.126	-.152	.010	-.157		-.221				6
7	.226	.227		-.163		-.153				-.117	.171		-.128		-.174				7
8	.181	.182		-.151		-.142				.152			-.101		-.202				8
9	-.190	-.158		-.163						.241	.204		-.088						9
10	-.110	-.151		-.342						.295	.387								10
11	-.163	-.167									.448								11
12	-.164	-.175									.400								12
13		-.321																	13
							$\alpha = -12^\circ$			$\delta = 30^\circ$									
1	.183	.104	-.070	-.159	-.096	-.131	-.236												1
2	.352	.364	.394	.383	.375	.364	-.264			-.276	-.393	-.416	-.383	-.275	-.151	-.055			2
3	.264	.278	.319	.301	.308	.327	-.009			-.129		-.341	-.281	-.264	-.108	.063			3
4	.272	.247	.263	.242	.272	.341				-.133	-.166	-.292	-.082	-.230	-.074	.142			4
5	.260	.248	.230	.015	.295	-.261	-.210			-.148	-.144	-.214		-.126	-.090	.171			5
6	.251	.230	.224	-.294		-.275				-.130	-.015	.047	-.079		-.060				6
7	.233	.239		-.308		-.302				.098	.244		-.043		-.027				7
8	.219	.244		-.293		-.300				.251			.010		-.073				8
9	-.311	-.289		-.303						.292	.256		-.006						9
10	-.235	-.295		-.345						.436	.473								10
11	-.303	-.306									.686								11
12	-.294	-.317									.624								12
13		-.359																	13

Table 22 Concluded

Pressure Coefficients on Delta Wing with Control

Configuration J2 M = 1.61 R = 4.2×10^6

Orif	Upper Surface at Station										Lower Surface at Station									Orif
	1	2	3	4	5	6	7	8	9		1	2	3	4	5	6	7	8	9	
	$\alpha = -15^\circ$										$\delta = 00^\circ$									
1	.117	-.007	-.154	-.292	-.194	-.253	-.177													1
2	.416	.425	.440	.434	.448	.430	.459				-.373	-.419	-.435	-.431	-.457	-.446	-.343			2
3	.323	.344	.398	.401	.406	.433	.404				-.161		-.394	-.409	-.434	-.433	-.341			3
4	.333	.317	.372	.341	.383	.423					-.164	-.284	-.404	-.374	-.424	-.411	-.359			4
5	.321	.352	.332	-.005	.398	.444	.490				-.178	-.158	-.394		-.382	-.370	-.285			5
6	.346	.341	.316	.383		.406					-.163	-.183	-.329	-.316		-.379				6
7	.322	.313		.358		.399					-.146	-.154		-.347		-.341				7
8	.196	.090		.358		.401					-.015			-.325		-.323				8
9	.306	.342		.353							-.113	-.116		-.305						9
10	.327	.353		-.380							-.128	-.113								10
11	.347	.349										-.142								11
12	.344	.340										-.133								12
13		-.329																		13

Table 23

Pressure Coefficients on Delta Wing with Control

Configuration J3 M = 1.61 R = 4.2×10^6

Orif	Upper Surface at Station 1	2	3	4	5	6	7	8	9		Lower Surface at Station 1	2	3	4	5	6	7	8	9	Orif
							$\alpha = 00^\circ$				$\delta = 00^\circ$									
1	.341	.296	.310	.299	.338	.370	.106				.065	.044	.032	.034	-.001	.000	.206			1
2	.060	.037	.031	.027	.017	.003	.165				.030		.002	-.003	-.005	-.009	.186			2
3	.027	.010	.007	.001	-.009	.001	.234				.027	.002	-.019	.001	-.042	.051	-.122			3
4	.035	.007	-.007	-.022	-.021	.063	-.121				.002	-.006	-.018		.063	.175	-.272			4
5	.024	.003	-.019	-.112	.008	.169	-.213				.017	-.029	.040	.103		-.132				5
6	.017	-.017	-.005	.072							.013	.060		-.072		-.404				6
7	.013	.004		-.112		-.325					.045			-.350		-.219				7
8	-.003	-.038		-.228		-.138								-.157						8
9		-.091		-.084								-.167								9
10	-.110	-.110									-.191	-.171								10
11	-.120	-.099									-.153	-.155								11
12	-.095	-.091																		12
							$\alpha = 00^\circ$				$\delta = 10^\circ$									
1	.337	.292	.306	.297	.339	.363	.114				.059	.040	.025	.028	-.010	-.006	.416			1
2	.056	.035	.030	.026	.017	.009	.099				.023		-.002	-.007	-.010	-.017	.278			2
3	.024	.007	.006	-.001	-.007	.002	.118				.027	-.003	-.024	.197	-.049	.385	.001			3
4	.034	.003	-.008	-.024	-.021	.084	-.198				-.003	-.010	-.020		.310	.345	-.139			4
5	.020	.002	-.021	-.114	.007	.096	-.311				.011	-.034	.036	.065		-.263				5
6	.010	-.017	-.006	.065							.007	.052		-.241		-.198				6
7	.009	.004		.033		-.370					.056			-.015		-.050				7
8	-.007	-.044		-.337		-.280								.047						8
9		-.232		-.234								.006								9
10	-.204	-.236									-.009	.062								10
11	-.253	-.247									.044	.097								11
12	-.239	-.181																		12
							$\alpha = 00^\circ$				$\delta = 30^\circ$									
1	.338	.294	.304	.296	.338	.359	.101				.056	.036	.022	.023	-.018	.099	1.207			1
2	.060	.036	.031	.030	.024	.023	-.072				.022		-.005	-.010	-.014	.485	.507			2
3	.024	.008	.007	.003	-.004	.014	-.223				.026	-.006	-.027	.374	.344	.483	.423			3
4	.035	.003	-.006	-.014	-.017	.113	-.367				-.005	-.011	.075		.250	.813	.583			4
5	.021	.000	-.019	-.108	.021	.159	-.411				.013	.231	.542	.587		.078				5
6	.009	-.013	.003	.009							.284	.499		.425		.508				6
7	.013	.014		.093		-.380					.386			.573		.449				7
8	.035	.084		-.411		-.406								.486						8
9		-.360		-.387								.750								9
10	-.333	-.338									.575	.924								10
11	-.364	-.311									.571	.806								11
12	-.280	-.282																		12
							$\alpha = 00^\circ$				$\delta = 20^\circ$									
1	.340	.297	.308	.299	.342	.362	.089				.058	.040	.024	.028	-.013	-.011	.628			1
2	.061	.039	.035	.032	.026	.021	-.043				.025		-.001	-.007	-.010	.074	.494			2
3	.027	.011	.009	.006	-.001	.011	-.092				.028	-.002	-.024	-.106	-.049	.032	.175			3
4	.035	.006	-.003	-.015	-.012	.064	-.381				-.003	-.009	-.018		-.067	.297	.273			4
5	.023	.005	-.016	-.105	.017	.218	-.423				.015	-.028	.365	.126		.016				5
6	.014	-.011	.004	.098							.010	.348		.201		.316				6
7	.014	.013		.100		-.376					.256			.422		.313				7
8	.038	.081		-.417		-.416								.415						8
9		-.375		-.404								.621								9
10	-.345	-.322									.512	.666								10
11	-.363	-.298									.517	.595								11
12	-.242	-.276																		12
							$\alpha = 03^\circ$				$\delta = 00^\circ$									
1	.340	.190	.237	.195	.268	.345	-.012				.132	.139	.145	.157	.129	.140	.268			1
2	-.008	-.068	-.122	-.185	-.211	-.258	-.022				.077		.081	.067	.088	.100	.207			2
3	-.022	-.047	-.045	-.076	-.097	-.118	-.012				.080	.052	.049	.068	.023	.117	-.072			3
4	-.011	-.046	-.069	-.088	-.089	-.032	-.211				.052	.048	.039		.149	.287	-.174			4
5	-.031	-.047	-.072	-.103	-.067	.037	-.363				.067	.016	.077	.158		-.056				5
6	-.031	-.060	-.056	-.017							.056	.113		-.162		-.318				6
7	-.030	-.041		-.080		-.370					.075			-.281		-.169				7
8	-.017	-.056		-.339		-.204								-.090						8
9		-.148		-.138								-.118								9
10	-.153	-.161									-.160	-.112								10
11	-.158	-.160									-.120	-.091								11
12	-.144	-.159																		12

[redacted]

Table 23 Continued

Pressure Coefficients on Delta Wing with Control

Configuration J3 M = 1.61 R = 4.2×10^6

Orif	Upper Surface at Station 1	2	3	4	5	6	7	8	9		Lower Surface at Station 1	2	3	4	5	6	7	8	9	Orif
							α = 06°				δ = 00°									
1	.314	.118	.159	.103	.113	.210	-.269													1
2	-.076	-.235	-.323	-.362	-.372	-.387	-.169				.199	.226	.233	.240	.216	.224	.304			2
3	-.059	-.095	-.106	-.133	-.296	-.345	-.180				.133		.161	.138	.152	.182	.190			3
4	-.039	-.091	-.116	-.145	-.103	-.221	-.348				.148	.115	.113	.243	.097	.355	-.049			4
5	-.077	-.088	-.118	-.099	-.106	-.181	-.396				.115	.104	.100		.342	.331	-.129			5
6	-.065	-.098	-.093	-.099							.117	.068	.136	.187		.018				6
7	-.062	-.077		-.124		-.367					.100	.169		-.209		-.305				7
8	-.017	-.063		-.310		-.243					.110			-.207		-.139				8
9		-.156		-.142										-.067						9
10	-.157	-.162										-.117								10
11	-.170	-.170									-.139	-.099								11
12	-.158	-.162									-.093	-.064								12
							α = 06°				δ = 10°									
1	.313	.117	.157	.103	.115	.210	-.313													1
2	-.079	-.242	-.327	-.366	-.371	-.394	-.243				.201	.223	.233	.240	.211	.224	.338			2
3	-.058	-.095	-.108	-.140	-.293	-.343	-.269				.134		.161	.133	.147	.183	.332			3
4	-.041	-.092	-.117	-.146	-.104	-.261	-.395				.147	.113	.112	.223	.094	.358	.076			4
5	-.077	-.089	-.120	-.100	-.105	-.212	-.417				.112	.103	.098		.354	.277	.077			5
6	-.067	-.099	-.093	-.120							.119	.065	.137	.067		-.026				6
7	-.063	-.078		-.011		-.381					.098	.167		-.144		.018				7
8	-.024	-.059		-.358		-.325					.124			.149		.131				8
9		-.273		-.280										.194						9
10	-.252	-.274										.144								10
11	-.295	-.294									.150	.228								11
12	-.207	-.186									.195	.247								12
							α = 06°				δ = 20°									
1	.312	.118	.157	.102	.116	.215	-.285													1
2	-.078	-.240	-.327	-.362	-.370	-.392	-.292				.200	.223	.233	.239	.208	.225	.666			2
3	-.059	-.095	-.108	-.141	-.293	-.339	-.336				.133		.159	.132	.146	.777	.511			3
4	-.041	-.091	-.114	.018	-.103	-.234	-.433				.149	.109	.112	.075	.090	.027	.302			4
5	-.078	-.089	-.117	-.095	-.105	-.100	-.429				.109	.104	.096		-.015	.268	.519			5
6	-.068	-.097	-.089	.163							.121	.066	.500	.242		.335				6
7	-.064	-.071		.087		-.391					.100	.502		.317		.420				7
8	-.011	.019		-.400		-.411					.420			.556		.401				8
9		-.367		-.387										.468						9
10	-.314	-.350										.629								10
11	-.343	-.290									.625	.692								11
12	-.249	-.256									.584	.624								12
							α = 06°				δ = 30°									
1	.312	.116	.156	.101	.117	.215	.060													1
2	-.079	-.243	-.329	-.366	-.371	-.391	-.392				.199	.222	.232	.236	.208	.511	1.080			2
3	-.059	-.099	-.108	-.141	-.294	-.312	-.382				.132		.157	.134	.146	.950	.460			3
4	-.041	-.093	-.116	-.106	-.100	-.259	-.460				.149	.106	.109	.467	.594	.595	.567			4
5	-.077	-.090	-.118	-.096	-.105	-.187	-.446				.106	.101	.506		.455	1.193	.596			5
6	-.070	-.100	-.087	.049							.118	.521	.571	.793		.389				6
7	-.064	-.069		.085		-.417					.482	.569		.532		.660				7
8	-.015	.023		-.422		-.441					.556			.671		.566				8
9		-.353		-.413										.566						9
10	-.359	-.345										.681								10
11	-.349	-.326									.782	.855								11
12	-.308	-.306									.744	.805								12
							α = 09°				δ = 00°									
1	.273	.047	.064	.014	-.064	-.020	-.345													1
2	-.166	-.344	-.400	-.425	-.434	-.429	-.296				.273	.301	.309	.320	.296	.306	.216			2
3	-.095	-.144	-.233	-.344	-.394	-.425	-.290				.191		.233	.208	.224	.255	.169			3
4	-.079	-.136	-.147	-.215	-.366	-.343	-.430				.203	.178	.180	.425	.171	.614	-.004			4
5	-.117	-.133	-.155	-.092	-.237	-.302	-.436				.170	.165	.164		.519	.225	-.047			5
6	-.105	-.144	-.132	-.149							.175	.125	.195	.218		.037				6
7	-.103	-.123		-.187		-.383					.143	.228		-.304		-.173				7
8	-.043	-.079		-.362		-.341					.132			-.035		-.054				8
9		-.216		-.201										.014						9
10	-.198	-.214										-.054								10
11	-.220	-.234									-.081	-.020								11
12	-.211	-.227									-.026	.029								12

Table 23 Continued

Pressure Coefficients on Delta Wing with Control

Configuration J3 M = 1.61 R = 4.2×10^6

Orif	Upper Surface at Station 1	2	3	4	5	6	7	8	9	Lower Surface at Station 1	2	3	4	5	6	7	8	9	Orif
							$\alpha = 12^\circ$			$\delta = 00^\circ$									
1	.239	-.025	-.049	-.093	-.199	-.205	-.378												1
2	-.292	-.436	-.470	-.488	-.495	-.472	-.372			.351	.382	.391	.394	.368	.372	.280			2
3	-.131	-.220	-.341	-.437	-.463	-.465	-.366			.264		.304	.285	.306	.334	.113			3
4	-.125	-.199	-.252	-.316	-.445	-.423	-.445			.256	.253	.254	.465	.253	.603	-.010			4
5	-.152	-.193	-.227	-.092	-.302	-.387	-.447			.241	.237	.237		.593	.489	-.018			5
6	-.142	-.181	-.167	-.234						.243	.191	.264	.305		.060				6
7	-.137	-.147		-.359		-.401				.198	.294		-.215		-.215				7
8	-.078	-.082		-.306		-.383				.175			-.018		-.052				8
9		-.214		-.267									.031						9
10	-.199	-.212									-.044								10
11	-.223	-.229								-.059	-.008								11
12	-.214	-.218								.001	.068								12
							$\alpha = 12^\circ$			$\delta = 10^\circ$									
1	.239	-.029	-.050	-.093	-.202	-.204	-.410												1
2	-.294	-.444	-.477	-.496	-.500	-.485	-.392			.349	.381	.390	.391	.364	.368	.255			2
3	-.132	-.223	-.341	-.445	-.465	-.480	-.399			.264		.301	.281	.300	.736	.450			3
4	-.124	-.200	-.253	-.318	-.446	-.411	-.456			.255	.251	.252	.232	.246	.306	.178			4
5	-.155	-.196	-.227	-.089	-.321	-.389	-.441			.242	.235	.233		.367	.223	.290			5
6	-.144	-.182	-.168	-.277						.243	.189	.319	.226		.146				6
7	-.138	-.148		-.313		-.420				.196	.292		-.031		.192				7
8	-.090	-.077		-.351		-.391				.200			.290		.272				8
9		-.316		-.346									.335						9
10	-.286	-.315									.326								10
11	-.327	-.334								.337	.401								11
12	-.218	-.239								.388	.404								12
							$\alpha = 12^\circ$			$\delta = 20^\circ$									
1	.239	-.027	-.048	-.092	-.197	-.202	.095												1
2	-.292	-.444	-.474	-.490	-.472	-.363	-.424			.351	.380	.391	.391	.363	.367	.990			2
3	-.130	-.220	-.339	-.425	-.452	-.351	-.432			.263		.302	.279	.298	.911	.496			3
4	-.123	-.200	-.247	-.198	-.382	-.341	-.464			.255	.252	.253	.622	.532	.248	.517			4
5	-.153	-.192	-.228	-.087	-.263	-.350	-.439			.242	.236	.233		.298	1.007	.570			5
6	-.142	-.181	-.152	-.231						.244	.203	.740	.759		.547				6
7	-.136	-.146		-.318		-.441				.226	.705		.591		.641				7
8	-.083	.014		-.392		-.389				.676			.770		.582				8
9		-.405		-.367									.652						9
10	-.346	-.391									.850								10
11	-.383	-.340								.798	.879								11
12	-.316	-.314								.700	.760								12
							$\alpha = 12^\circ$			$\delta = 30^\circ$									
1	.239	-.026	-.049	-.093	-.196	-.278	.046												1
2	-.292	-.445	-.476	-.493	-.485	-.450	-.451			.350	.380	.390	.390	.362	.876	.967			2
3	-.131	-.219	-.339	-.434	-.461	-.446	-.449			.263		.301	.400	.359	1.001	.666			3
4	-.123	-.198	-.248	-.165	-.433	-.427	-.473			.255	.251	.252	.746	.875	.739	.797			4
5	-.153	-.193	-.222	-.084	-.173	-.383	-.450			.241	.236	.716		.726	1.149	.707			5
6	-.143	-.180	-.161	-.125						.244	.719	.801	1.022		.853				6
7	-.135	-.145		-.261		-.453				.677	.786		.788		.836				7
8	-.083	.011		-.406		-.409				.772			.847		.669				8
9		-.373		-.402									.712						9
10	-.384	-.370									.910								10
11	-.379	-.350								.880	1.023								11
12	-.341	-.339								.785	.901								12
							$\alpha = 15^\circ$			$\delta = 00^\circ$									
1	.197	-.097	-.187	-.191	-.314	-.319	-.408												1
2	-.400	-.460	-.445	-.439	-.457	-.366	-.353			.429	.458	.452	.466	.453	.472	.242			2
3	-.163	-.374	-.420	-.428	-.444	-.352	-.408			.334		.394	.403	.423	.705	.141			3
4	-.157	-.334	-.420	-.345	-.444	-.313	-.437			.321	.336	.372	.498	.368	.560	.083			4
5	-.183	-.165	-.424	-.083	-.300	-.294	-.399			.318	.355	.368		.636	.195	.168			5
6	-.174	-.195	-.379	-.229						.351	.309	.386	.352		.086				6
7	-.169	-.175		-.405		-.443				.305	.416		-.281		.046				7
8	-.106	-.073		-.441		-.355				.269			.108		.119				8
9		-.264		-.367									.178						9
10	-.245	-.267									.097								10
11	-.277	-.290								.062	.204								11
12	-.191	-.175								.141	.199								12

Table 23 Continued

Pressure Coefficients on Delta Wing with Control

Configuration J3 M = 1.61 R = 4.2×10^6

Orif	Upper Surface at Station 1	2	3	4	5	6	7	8	9	Lower Surface at Station 1	2	3	4	5	6	7	8	9	Orif
							$\alpha = -03^\circ$			$\delta = 00^\circ$									
1	.313	.305	.228	.252	.292	.316	-.026												1
2	.115	.112	.130	.138	.136	.137	.316			-.003	-.058	-.113	-.136	-.194	-.238	.047			2
3	.064	.066	.091	.059	.070	.096	.247			-.019		-.059	-.079	-.088	-.134	-.009			3
4	.068	.044	.051	.028	.040	.111	-.154			-.019	-.031	-.071	-.040	-.117	-.066	-.163			4
5	.071	.049	.024	-.080	.072	.261	-.222			-.042	-.052	-.075		-.018	.073	-.280			5
6	.056	.029	.036	.096						-.028	-.076	-.024	.034		-.285				6
7	.043	.046		-.117		-.387				-.032	.013		-.124		-.323				7
8	.009	-.035		-.314		-.198				.017			-.282		-.183				8
9		-.129		-.137									-.124						9
10	-.134	-.149									-.134								10
11	-.146	-.149								-.181	-.126								11
12	-.125	-.140								-.135	-.114								12
							$\alpha = -06^\circ$			$\delta = 00^\circ$									
1	.277	.278	.131	.140	.204	.165	-.154												1
2	.184	.193	.217	.224	.222	.221	.329			-.076	-.258	-.315	-.345	-.358	-.385	-.159			2
3	.124	.135	.159	.132	.129	.165	.281			-.058		-.113	-.149	-.294	-.338	-.269			3
4	.124	.099	.113	.349	.112	.542	-.034			-.063	-.080	-.113	-.079	-.151	-.251	-.390			4
5	.123	.104	.083	-.082	.387	.375	-.068			-.081	-.093	-.123		-.095	-.129	-.405			5
6	.108	.082	.089	.047						-.067	-.114	-.061	-.141		-.377				6
7	.093	.093		-.281		-.146				-.066	-.029		-.102		-.361				7
8	.046	-.018		-.070		-.051				.008			-.396		-.276				8
9		-.022		-.007									-.222						9
10	-.040	-.042									-.218								10
11	-.056	-.021								-.250	-.231								11
12	-.015	.002								-.219	-.196								12
							$\alpha = -06^\circ$			$\delta = 10^\circ$									
1	.276	.278	.131	.138	.203	.161	-.120												1
2	.183	.195	.220	.228	.223	.223	.330			-.076	-.261	-.315	-.350	-.358	-.387	-.099			2
3	.126	.137	.162	.137	.134	.168	.187			-.058		-.113	-.149	-.294	-.346	-.109			3
4	.124	.100	.116	.095	.117	.213	-.171			-.064	-.081	-.113	.081	-.152	-.105	-.255			4
5	.124	.104	.087	-.079	.138	.428	-.223			-.081	-.093	-.124		.125	-.026	-.371			5
6	.109	.085	.093	.283						-.068	-.113	-.065	-.005		-.400				6
7	.095	.096		-.017		-.324				-.068	-.030		-.247		-.319				7
8	.046	-.020		-.331		-.272				.021			-.079		-.166				8
9		-.213		-.222									-.038						9
10	-.179	-.215									-.036								10
11	-.222	-.234								-.091	-.010								11
12	-.211	-.225								-.032	.017								12
							$\alpha = -06^\circ$			$\delta = 20^\circ$									
1	.277	.278	.127	.136	.199	.157	-.056												1
2	.185	.196	.220	.226	.226	.225	.187			-.078	-.264	-.317	-.351	-.363	-.384	-.042			2
3	.126	.138	.162	.138	.136	.170	.162			-.058		-.117	-.152	-.297	-.345	.063			3
4	.123	.101	.114	.197	.120	.263	-.219			-.064	-.083	-.116	-.127	-.155	-.112	-.077			4
5	.124	.103	.089	.149	.338	.308	-.314			-.081	-.094	-.126		-.087	-.038	-.196			5
6	.108	.085	.098	.094						-.069	-.115	.126	-.046		-.249				6
7	.095	.100		.043		-.346				-.067	.172		-.059		-.092				7
8	.079	.087		-.383		-.356				.163			.198		-.002				8
9		-.315		-.327									.155						9
10	-.273	-.318									.283								10
11	-.323	-.281								.241	.354								11
12	-.220	-.196								.294	.346								12
							$\alpha = -06^\circ$			$\delta = 30^\circ$									
1	.274	.276	.126	.131	.195	.187	.210												1
2	.187	.198	.221	.228	.229	.231	.024			-.081	-.265	-.321	-.353	-.309	-.050	.245			2
3	.128	.139	.165	.140	.138	.175	.131			-.059		-.116	-.076	-.103	-.030	.408			3
4	.124	.103	.116	.099	.124	.228	-.296			-.065	-.083	-.117	.063	-.047	.133	.134			4
5	.123	.105	.091	.230	.147	.112	-.381			-.083	-.096	.015		.022	.178	.134			5
6	.108	.089	.100	-.059						-.069	.145	.314	.116		.026				6
7	.100	.108		.051		-.349				.064	.303		.112		.155				7
8	.110	.132		-.404		-.404				.286			.306		.144				8
9		-.391		-.391									.316						9
10	-.334	-.346									.443								10
11	-.367	-.301								.603	.561								11
12	-.276	-.265								.588	.537								12

Table 23 Continued

Pressure Coefficients on Delta Wing with Control

Configuration J3 M = 1.61 R = 4.2×10^6

Orif	Upper Surface at Station 1	2	3	4	5	6	7	8	9	Lower Surface at Station 1	2	3	4	5	6	7	8	9	Orif
							$\alpha = -09^\circ$			$\delta = 00^\circ$									
1	.243	.215	.032	.011	.080	.027	-.226												1
2	.256	.263	.293	.291	.296	.289	.263			-.139	-.350	-.404	-.413	-.431	-.451	-.252			2
3	.182	.187	.233	.204	.204	.216	.255			-.095		-.200	-.321	-.385	-.427	-.295			3
4	.183	.158	.176	.395	.185	.513	-.001			-.099	-.128	-.144	-.172	-.338	-.318	-.401			4
5	.173	.161	.141	.227	.438	.317	-.043			-.114	-.139	-.159		-.173	-.253	-.386			5
6	.162	.138	.144	.058						-.103	-.139	-.089	-.192		-.429				6
7	.145	.145		-.290		-.165				-.098	-.093		-.174		-.351				7
8	.060	-.012		-.051		-.016				-.007			-.372		-.305				8
9		-.005		.016									-.205						9
10	-.026	-.031									-.211								10
11	-.030	-.009								-.255	-.224								11
12	.007	.029								-.232	-.215								12
							$\alpha = -12^\circ$			$\delta = 00^\circ$									
1	.178	.104	-.075	-.161	-.081	-.148	-.243												1
2	.335	.356	.382	.368	.362	.351	.219			-.287	-.387	-.444	-.447	-.452	-.357	-.269			2
3	.258	.267	.303	.291	.293	.309	.252			-.135		-.307	-.355	-.413	-.324	-.353			3
4	.263	.237	.256	.411	.269	.476	.044			-.138	-.162	-.298	-.152	-.363	-.290	-.443			4
5	.241	.235	.217	.229	.458	.279	.092			-.151	-.153	-.281		-.208	-.269	-.413			5
6	.241	.215	.220	.251						-.141	-.167	-.198	-.148		-.378				6
7	.212	.211		-.283		-.055				-.130	-.113		-.349		-.389				7
8	.105	.009		.045		.073				-.030			-.402		-.337				8
9		.080		.114									-.293						9
10	.067	.060									-.261								10
11	.056	.110								-.292	-.277								11
12	.102	.143								-.241	-.170								12
							$\alpha = -12^\circ$			$\delta = 10^\circ$									
1	.178	.102	-.077	-.165	-.086	-.149	-.187												1
2	.335	.356	.383	.370	.363	.357	.317			-.290	-.392	-.451	-.457	-.472	-.445	-.288			2
3	.257	.268	.305	.292	.293	.312	.118			-.136		-.312	-.330	-.430	-.408	-.358			3
4	.263	.240	.257	.530	.268	.653	-.075			-.138	-.163	-.300	-.174	-.383	-.362	-.438			4
5	.244	.236	.218	.228	.593	.555	-.078			-.153	-.154	-.282		-.250	-.313	-.420			5
6	.242	.218	.220	.260						-.139	-.167	-.208	-.138		-.417				6
7	.212	.215		-.128		-.237				-.131	-.115		-.353		-.386				7
8	.101	.013		-.175		-.144				-.019			-.285		-.314				8
9		-.108		-.098									-.251						9
10	-.095	-.115									-.157								10
11	-.132	-.113								-.186	-.148								11
12	-.103	-.092								-.146	-.096								12
							$\alpha = -12^\circ$			$\delta = 20^\circ$									
1	.177	.102	-.079	-.166	-.088	-.154	-.153												1
2	.336	.350	.383	.372	.367	.356	.132			-.292	-.397	-.452	-.462	-.465	-.397	-.258			2
3	.260	.269	.308	.294	.296	.313	.050			-.136		-.312	-.347	-.425	-.370	-.289			3
4	.264	.241	.259	.583	.273	.693	-.202			-.139	-.167	-.300	-.188	-.383	-.311	-.362			4
5	.245	.237	.221	.229	.656	.312	-.231			-.153	-.155	-.286		-.288	-.309	-.401			5
6	.240	.222	.224	.097						-.140	-.169	-.192	-.159		-.354				6
7	.215	.220		-.024		-.310				-.129	.021		-.308		-.304				7
8	.115	.093		-.328		-.293				.091			-.133		-.252				8
9		-.256		-.274									-.136						9
10	-.220	-.259									.122								10
11	-.266	-.270								.047	.212								11
12	-.254	-.187								.149	.237								12
							$\alpha = -12^\circ$			$\delta = 30^\circ$									
1	.177	.101	-.077	-.165	-.085	-.147	-.224												1
2	.339	.360	.386	.375	.372	.360	-.055			-.294	-.395	-.437	-.419	-.327	-.245	-.170			2
3	.262	.269	.312	.298	.300	.315	.058			-.136		-.336	-.313	-.305	-.261	-.048			3
4	.265	.244	.261	.411	.278	.666	-.241			-.137	-.166	-.313	-.145	-.270	-.142	-.116			4
5	.246	.240	.227	.294	.576	.060	-.319			-.151	-.151	-.275		-.179	-.170	-.212			5
6	.241	.226	.230	-.044						-.138	-.148	.099	-.121		-.130				6
7	.219	.230		-.002		-.329				-.117	.213		-.180		-.148				7
8	.182	.194		-.373		-.376				.220			-.078		-.136				8
9		-.349		-.363									-.066						9
10	-.318	-.322									.391								10
11	-.345	-.294								.419	.563								11
12	-.234	-.246								.418	.539								12

Table 23 Concluded

Pressure Coefficients on Delta Wing with Control

Configuration J3 M = 1.61 R = 4.2×10^6

Orif	Upper Surface at Station										Lower Surface at Station									Orif
	1	2	3	4	5	6	7	8	9		1	2	3	4	5	6	7	8	9	
	$\alpha = -15^\circ$										$\delta = 00^\circ$									
1	.127	.003	-.153	-.289	-.179	-.251	-.265				-.386	-.425	-.439	-.432	-.433	-.353	-.307			1
2	.413	.415	.429	.415	.428	.416	.170				-.164		-.407	-.420	-.437	-.343	-.378			2
3	.317	.332	.374	.384	.384	.707	.221				-.166	-.286	-.415	-.293	-.428	-.317	-.418			3
4	.331	.300	.355	.421	.376	.451	.043				-.182	-.165	-.415		-.301	-.297	-.381			4
5	.306	.327	.317	.293	.468	.264	.162				-.168	-.188	-.338	-.204		-.386				5
6	.322	.323	.351	.408							-.151	-.144		-.426		-.398				6
7	.304	.308		-.320		-.032					-.052			-.416		-.338				7
8	.166	.058		.075		.121								-.342						8
9		.122		.165								-.251								9
10	.099	.097									-.295	-.265								10
11	.099	.180									-.251	-.153								11
12	.146	.169																		12

Table 24

Pressure Coefficients on Delta Wing with Control

Configuration J4 M = 1.61 R = 4.2×10^6

Orif	Upper Surface at Station 1	2	3	4	5	6	7	8	9	Lower Surface at Station 1	2	3	4	5	6	7	8	9	Orif
							$\alpha = 00^\circ$			$\delta = -30^\circ$									
1	.379	.365	.279	.258	.300	.349	.150												1
2	.050	.033	.018	.013	.000	.142	1.016			.078		.047		.023	.028	-.429			2
3	.015	.007		.065	.000	.330	.895			.039	.028	.013		.016	.013	-.457			3
4	.023	-.007	.325	.043	.419	.630	.579			.044		.002	.017	-.023	.057	-.461			4
5	-.002	.007	.338	.080	.182	.986	.627			.004	.015	-.018		.041	-.147	-.450			5
6	.143	.410	.154	.055						.023	.005	.048	-.378		-.416				6
7	.396	.148		.197		.671				.008	.022		-.333		-.363				7
8	.136	.127		.510		.625				.060			-.342		-.378				8
9		.149		.634									-.351						9
10	.166	.159									-.372								10
11	.248	.306								-.246	-.378								11
12	.247	.331								-.285	-.345								12
							$\alpha = 00^\circ$			$\delta = -20^\circ$									
1	.383	.361	.280	.262	.302	.352	.186												1
2	.050	.029	.018	.018	.000	.105	1.005			.074		.042		.023	.021	-.346			2
3	.013	.008		.063	.001	.201	.669			.041	.015	.008		.011	.011	-.451			3
4	.023	-.005	.310	-.168	.404	.397	.147			.037		.000	-.002	-.032	.057	-.460			4
5	-.001	.004	.342	-.011	-.049	.895	.348			.002	.010	-.025		.031	-.119	-.464			5
6	.118	.408	-.123	-.158						.025	.002	.037	-.400		-.424				6
7	.391	-.110		-.008		.321				.006	.008		-.408		-.417				7
8	-.128	.051		.221		.294				.002			-.294		-.327				8
9		-.109		.342									-.283						9
10	-.057	-.043									-.425								10
11	.085	.089								-.176	-.354								11
12	.108	.113								-.220	-.253								12
							$\alpha = 00^\circ$			$\delta = -10^\circ$									
1	.379	.369	.289	.265	.302	.350	.145												1
2	.052	.033	.025	.022	.002	.141	.759			.071		.048		.018	.022	-.218			2
3	.017	.011		.053	.006	.206	.427			.035	-.010	.010		.010	.011	-.190			3
4	.025	-.001	.198	-.329	.395	.158	.048			.035		.000	-.007	-.032	.050	-.397			4
5	-.002	.012	.341	-.124	-.153	.548	.039			.001	.014	-.023		.020	-.058	-.407			5
6	.154	.400	-.314	-.287						.018	-.002	.032	-.302		-.325				6
7	.388	-.300		-.133		.037				.004	.003		-.302		-.341				7
8	-.311	.010		.022		.003				-.003			-.301		-.339				8
9		-.271		.094									-.303						9
10	-.189	-.163									-.313								10
11	-.062	-.071								-.072	-.316								11
12	-.046	-.037								-.195	-.167								12
							$\alpha = 00^\circ$			$\delta = 00^\circ$									
1	.383	.371	.282	.268	.304	.352	.098												1
2	.054	.036	.023	.019	.005	.107	.256			.087		.046		.024	.022	-.013			2
3	.018	.011		.073	.020	.199	.187			.042	-.074	.012		.018	.010	.022			3
4	.029	-.003	.143	-.409	.384	.157	-.064			.044		.001	-.003	-.026	.037	-.138			4
5	.005	.005	.338	-.205	-.209	.164	-.169			.010	.018	-.022		.022	.064	-.289			5
6	.152	.402	-.396	-.343						.024	.003	.033	-.142		-.196				6
7	.396	-.382		-.222		-.182				.014	.007		-.141		-.201				7
8	-.392	.000		-.160		-.212				.011			-.138		-.198				8
9		-.324		-.131									-.144						9
10	-.257	-.249									-.164								10
11	-.130	-.203								-.111	-.146								11
12	-.124	-.154								-.142	-.129								12
							$\alpha = 00^\circ$			$\delta = 10^\circ$									
1	.385	.362	.279	.264	.307	.347	.102												1
2	.050	.035	.029	.018	.001	.070	-.038			.068		.039		.008	.016	.340			2
3	.014	.011		.070	.008	.211	-.048			.028	.011	.003		.004	.000	.284			3
4	.013	-.002	.191	-.443	.370	.161	-.222			.028		-.014	-.020	-.038	.032	.022			4
5	.004	-.003	.346	-.220	-.218	-.082	-.360			-.001	.012	-.033		.015	.251	-.074			5
6	.043	.402	-.435	-.387						.013	-.002	.019	.098		.051				6
7	.417	-.412		-.335		-.328				.022	-.002		.109		.030				7
8	-.411	-.027		-.326		-.338				-.002			.122		.014				8
9		-.350		-.307									.123						9
10	-.301	-.326									.120								10
11	-.137	-.262								.085	.115								11
12	-.237	-.176								.115	.118								12

Table 24 Continued

Pressure Coefficients on Delta Wing with Control

Configuration J4 M = 1.61 R = 4.2×10^6

Orif	Upper Surface at Station 1	2	3	4	5	6	7	8	9	Lower Surface at Station 1	2	3	4	5	6	7	8	9	Orif
							$\alpha = 00^\circ$			$\delta = 20^\circ$									
1	.387	.361	.283	.263	.306	.352	.232												1
2	.057	.034	.025	.023	.002	.076	-.243			.067		.036		.002	.008	.627			2
3	.020	.013		.061	.003	.216	-.183			.028	.011	.004		-.002	-.008	.503			3
4	.022	.000	.188	-.447	.385	.185	-.407			.032		-.015	.252	-.042	.082	.119			4
5	.005	.003	.345	.015	-.216	-.255	-.412			-.004	.006	-.032		.138	.532	.213			5
6	.041	.407	-.438	-.400						.011	-.010	.292	.324		.377				6
7	.424	-.411		-.383		-.412				.019	.304		.554		.398				7
8	-.406	.055		-.388		-.272				.225			.595		.374				8
9		-.395		-.349									.521						9
10	-.320	-.344									.506								10
11	-.196	-.264								.450	.555								11
12	-.258	-.226								.458	.511								12
							$\alpha = 00^\circ$			$\delta = 30^\circ$									
1	.383	.365	.282	.265	.309	.351	.423												1
2	.050	.039	.026	.025	.015	.076	-.340			.073		.032		.004	.001	.886			2
3	.016	.013		.057	.002	.224	-.418			.035	.014	.007		.001	.359	.797			3
4	.027	.002	.185	-.440	.385	.201	-.439			.044		-.016	.423	.374	.635	.614			4
5	.010	.001	.346	.131	-.218	-.349	-.429			-.005	.007	.327		.436	.599	.630			5
6	.039	.402	-.437	-.370						.012	.361	.382	.426		.825				6
7	.423	-.414		-.373		-.352				.302	.425		.618		.755				7
8	-.396	.109		-.382		-.319				.408			.755		.646				8
9		-.409		-.356									.682						9
10	-.327	-.338									.465								10
11	-.229	-.297								.679	.617								11
12	-.286	-.266								.649	.606								12
							$\alpha = 06^\circ$			$\delta = -30^\circ$									
1	.320	.083	.131	-.028	.081	.208	.213												1
2	-.097	-.280	-.341	-.388	-.385	.052	.291			.211		.253		.226	.253	-.381			2
3	-.079	-.092		-.075	-.151	.053	.498			.152	.160	.169		.176	.202	-.339			3
4	-.065	-.108	.003	-.050	-.027	.084	.134			.151		.128	.138	.113	.222	-.429			4
5	-.099	-.105	.284	.137	.121	.101	.237			.115	.130	.106		.204	-.137	-.327			5
6	-.058	.305	.052	-.025						.129	.111	.154	-.380		-.415				6
7	.244	.028		.096		.214				.103	.120		-.337		-.361				7
8	.037	.126		.347		.175				.094			-.333		-.372				8
9		.054		.453									-.338						9
10	.084	.087									-.363								10
11	.196	.257								-.280	-.362								11
12	.215	.308								-.254	-.327								12
							$\alpha = 06^\circ$			$\delta = -20^\circ$									
1	.329	.091	.139	-.016	.087	.186	.106												1
2	-.093	-.275	-.336	-.382	-.387	-.043	.140			.207		.249		.226	.251	-.265			2
3	-.075	-.087		-.096	-.210	-.080	.194			.151	.176	.161		.176	.197	-.166			3
4	-.054	-.094	-.008	-.229	.086	-.048	-.031			.154		.125	.127	.112	.216	-.336			4
5	-.092	-.098	.296	.019	-.126	-.018	-.077			.111	.125	.105		.189	-.100	-.300			5
6	-.062	.307	-.193	-.217						.128	.110	.149	-.361		-.380				6
7	.253	-.195		-.096		.012				.107	.120		-.366		-.389				7
8	-.215	.061		.074		-.011				.070			-.370		-.397				8
9		-.178		.168									-.325						9
10	-.112	-.100									-.393								10
11	.042	.041								-.221	-.393								11
12	.068	.070								-.216	-.213								12
							$\alpha = 06^\circ$			$\delta = -10^\circ$									
1	.327	.096	.138	-.011	.094	.189	.003												1
2	-.085	-.266	-.333	-.376	-.377	-.060	-.039			.207		.246		.217	.239	-.085			2
3	-.068	-.083		-.093	-.222	-.119	-.029			.146	.158	.157		.162	.190	.025			3
4	-.056	-.095	-.010	-.356	.137	-.139	-.220			.149		.122	.120	.097	.201	-.138			4
5	-.089	-.091	.302	-.077	-.209	-.129	-.310			.101	.120	.092		.177	-.015	-.212			5
6	-.063	.308	-.338	-.333						.120	.101	.139	-.249		-.267				6
7	.271	-.343		-.210		-.185				.093	.103		-.252		-.273				7
8	-.345	.034		-.096		-.201				.056			-.252		-.277				8
9		-.315		-.034									-.261						9
10	-.233	-.212									-.281								10
11	-.086	-.127								-.058	-.277								11
12	-.068	-.083								-.183	-.252								12

Table 24 Continued

Pressure Coefficients on Delta Wing with Control

Configuration J4 M = 1.61 R = 4.2×10^6

Orif	Upper Surface at Station 1	2	3	4	5	6	7	8	9	Lower Surface at Station 1	2	3	4	5	6	7	8	9	Orif
							α = 06°			δ = 00°									
1	.329	.092	.138	-.010	.094	.191	-.047												1
2	-.092	-.274	-.339	-.370	-.382	-.078	-.197			.219		.247		.234	.248	.235			2
3	-.075	-.083		-.090	-.240	-.127	-.339			.159	.160	.161		.168	.194	.239			3
4	-.056	-.094	-.013	-.428	.157	-.194	-.393			.160		.126	.129	.113	.212	.000			4
5	-.088	-.095	.293	-.174	-.262	-.186	-.394			.112	.131	.100		.187	.183	-.038			5
6	-.076	.310	-.419	-.366						.132	.115	.148	-.023		-.042				6
7	.272	-.417		-.280		-.309				.106	.113		-.024		-.056				7
8	-.406	.022		-.226		-.320				.060			-.028		-.062				8
9		-.360		-.157									-.037						9
10	-.263	-.301									-.061								10
11	-.142	-.243								-.014	-.051								11
12	-.156	-.158								-.060	-.036								12
							α = 06°			δ = 10°									
1	.326	.094	.143	-.007	.104	.193	-.037												1
2	-.090	-.265	-.330	-.373	-.382	-.122	-.308			.205		.238		.222	.240	.686			2
3	-.069	-.094		-.094	-.277	-.118	-.438			.143	.152	.154		.158	.186	.457			3
4	-.058	-.095	.063	-.461	.264	-.208	-.448			.144		.123	.121	.105	.207	.082			4
5	-.088	-.098	.299	-.147	-.270	-.276	-.442			.107	.130	.095		.177	.461	.173			5
6	-.077	.328	-.443	-.412						.129	.107	.138	.268		.238				6
7	.284	-.438		-.364		-.384				.119	.104		.277		.233				7
8	-.409	.012		-.293		-.314				.079			.291		.213				8
9		-.374		-.199									.292						9
10	-.299	-.325									.257								10
11	-.164	-.253								.218	.251								11
12	-.240	-.210								.252	.252								12
							α = 06°			δ = 20°									
1	.327	.098	.141	-.011	.102	.200	.162												1
2	-.085	-.267	-.328	-.368	-.379	-.129	-.344			.212		.241		.217	.241	1.195			2
3	-.068	-.084		-.091	-.266	-.115	-.442			.142	.162	.151		.161	.187	.599			3
4	-.059	-.093	.061	-.451	.257	-.196	-.456			.150		.117	.526	.098	.646	.511			4
5	-.079	-.096	.311	.282	-.266	-.362	-.422			.105	.119	.091		.526	.786	.559			5
6	-.079	.317	-.430	-.411						.121	.100	.515	.538		.738				6
7	.280	-.420		-.375		-.335				.123	.496		.724		.670				7
8	-.400	.127		-.326		-.315				.424			.768		.593				8
9		-.388		-.270									.660						9
10	-.322	-.337									.658								10
11	-.235	-.286								.666	.714								11
12	-.284	-.260								.619	.635								12
							α = 06°			δ = 30°									
1	.334	.101	.149	-.002	.111	.212	.171												1
2	-.082	-.256	-.324	-.366	-.371	-.125	-.425			.215		.241		.222	.348	1.265			2
3	-.065	-.079		-.078	-.269	-.098	-.456			.149	.155	.151		.165	.639	.978			3
4	-.051	-.087	.069	-.455	.267	-.154	-.466			.150		.117	.627	.592	.706	.862			4
5	-.082	-.093	.314	.287	-.256	-.400	-.411			.107	.117	.507		.651	.618	.744			5
6	-.075	.329	-.434	-.406						.124	.526	.590	.635		1.078				6
7	.294	-.427		-.395		-.357				.498	.581		.873		1.012				7
8	-.411	.164		-.379		-.356				.564			1.005		.805				8
9		-.404		-.352									.856						9
10	-.345	-.356									.620								10
11	-.249	-.328								.805	.737								11
12	-.301	-.305								.750	.701								12
							α = 12°			δ = -30°									
1	.192	-.123	-.036	-.199	-.176	.025	.061												1
2	-.311	-.441	-.459	-.369	-.290	.035	.072			.346		.401		.372	.397	-.346			2
3	-.142	-.199		-.256	-.210	-.060	.177			.285	.288	.303		.323	.353	-.222			3
4	-.125	-.194	-.270	-.172	-.224	-.127	.002			.291		.268	.269	.255	.355	-.369			4
5	-.165	-.167	-.046	.129	-.176	-.100	-.031			.243	.255	.239		.357	-.130	-.414			5
6	-.150	.200	-.211	-.155						.251	.238	.273	-.414		-.399				6
7	.183	-.176		-.143		-.077				.191	.232		-.398		-.370				7
8	-.158	.093		-.083		-.072				.133			-.334		-.341				8
9		-.159		-.093									-.326						9
10	-.078	-.095									-.424								10
11	.154	.210								-.319	-.372								11
12	.230	.338								-.298	-.317								12

Table 24 Continued

Pressure Coefficients on Delta Wing with Control

Configuration J4 M = 1.61 R = 4.2×10^6

Orif	Upper Surface at Station 1	2	3	4	5	6	7	8	9	Lower Surface at Station 1	2	3	4	5	6	7	8	9	Orif
							$\alpha = 12^\circ$			$\delta = -20^\circ$									
1	.197	-.109	-.028	-.196	-.168	-.031	-.007												1
2	-.306	-.426	-.450	-.417	-.337	-.059	-.035			.341		.398		.370	.390	-.205			2
3	-.132	-.192		-.299	-.267	-.098	-.057			.277	.290	.298		.318	.345	-.059			3
4	-.111	-.188	-.336	-.300	-.274	-.182	-.192			.290		.265	.266	.249	.353	-.189			4
5	-.159	-.194	.056	.073	-.297	-.152	-.256			.248	.252	.235		.355	-.056	-.324			5
6	-.141	.205	-.316	-.277						.254	.236	.267	-.334		-.335				6
7	.200	-.303		-.245		-.197				.185	.229		-.339		-.352				7
8	-.325	.079		-.197		-.170				.124			-.344		-.361				8
9		-.301		-.169									-.347						9
10	-.193	-.228									-.362								10
11	-.017	-.050								-.201	-.364								11
12	.016	.026								-.285	-.246								12
							$\alpha = 12^\circ$			$\delta = -10^\circ$									
1	.192	-.123	-.034	-.199	-.176	-.051	-.098												1
2	-.307	-.431	-.465	-.422	-.351	-.096	-.175			.348		.397		.367	.389	.024			2
3	-.136	-.197		-.310	-.283	-.158	-.219			.282	.283	.298		.312	.345	.113			3
4	-.117	-.192	-.329	-.399	-.304	-.231	-.374			.287		.264	.259	.247	.356	-.071			4
5	-.162	-.199	.048	.008	-.392	-.207	-.397			.233	.257	.241		.344	.068	-.147			5
6	-.149	.200	-.402	-.372						.245	.233	.266	-.168		-.175				6
7	.192	-.393		-.322		-.263				.183	.220		-.170		-.195				7
8	-.383	.068		-.266		-.227				.127			-.177		-.196				8
9		-.382		-.208									-.187						9
10	-.263	-.316									-.217								10
11	-.143	-.212								-.039	-.214								11
12	-.119	-.130								-.147	-.202								12
							$\alpha = 12^\circ$			$\delta = 00^\circ$									
1	.189	-.121	-.039	-.196	-.175	-.051	-.108												1
2	-.308	-.417	-.447	-.408	-.359	-.103	-.291			.349		.396		.371	.384	.371			2
3	-.134	-.196		-.308	-.288	-.182	-.391			.282	.220	.295		.313	.341	.317			3
4	-.114	-.191	-.323	-.455	-.310	-.252	-.405			.291		.259	.258	.246	.349	.026			4
5	-.168	-.194	.053	-.107	-.443	-.248	-.390			.241	.248	.235		.343	.266	.071			5
6	-.149	.206	-.465	-.405						.244	.228	.266	.086		.059				6
7	.197	-.454		-.364		-.299				.194	.226		.071		.050				7
8	-.409	.046		-.316		-.272				.134			.065		.050				8
9		-.407		-.233									.060						9
10	-.308	-.375									.023								10
11	-.191	-.290								.064	.034								11
12	-.209	-.195								.062	.046								12
							$\alpha = 12^\circ$			$\delta = 10^\circ$									
1	.197	-.107	-.026	-.188	-.163	-.036	.039												1
2	-.299	-.422	-.451	-.412	-.352	-.085	-.350			.352		.405		.375	.389	.877			2
3	-.134	-.189		-.304	-.274	-.168	-.432			.282	.297	.302		.314	.342	.482			3
4	-.118	-.184	-.303	-.443	-.298	-.251	-.433			.288		.269	.258	.249	.350	.227			4
5	-.157	-.190	.091	-.018	-.435	-.355	-.327			.244	.249	.226		.348	.623	.395			5
6	-.144	.217	-.448	-.397						.249	.239	.274	.439		.421				6
7	.205	-.442		-.356		-.298				.209	.225		.442		.427				7
8	-.407	.052		-.326		-.291				.147			.461		.386				8
9		-.404		-.291									.442						9
10	-.304	-.367									.415								10
11	-.201	-.316								.373	.404								11
12	-.263	-.261								.396	.400								12
							$\alpha = 12^\circ$			$\delta = 20^\circ$									
1	.190	-.115	-.032	-.195	-.170	-.046	.348												1
2	-.300	-.434	-.465	-.420	-.362	-.093	-.419			.342		.398		.366	.370	1.234			2
3	-.144	-.197		-.306	-.288	-.175	-.463			.278	.280	.295		.304	.340	.737			3
4	-.125	-.193	-.310	-.453	-.307	-.249	-.448			.277		.255	.740	.234	.880	.714			4
5	-.166	-.198	.083	.501	-.434	-.401	-.358			.236	.244	.216		.749	.838	.657			5
6	-.145	.206	-.465	-.387						.237	.222	.710	.737		.945				6
7	.209	-.463		-.372		-.333				.201	.698		.904		.827				7
8	-.424	.207		-.370		-.332				.631			.897		.699				8
9		-.427		-.340									.744						9
10	-.348	-.395									.844								10
11	-.261	-.361								.792	.853								11
12	-.302	-.314								.693	.742								12

Table 24 Continued

Pressure Coefficients on Delta Wing with Control

Configuration J4 M = 1.61 R = 4.2 x 10^6

Orif	Upper Surface at Station 1	2	3	4	5	6	7	8	9	Lower Surface at Station 1	2	3	4	5	6	7	8	9	Orif
								α = 12°			δ = 30°								
1	.202	-.106	-.026	-.189	-.162	-.077	.255												1
2	-.299	-.433	-.458	-.422	-.356	-.107	-.416			.345		.398		.361	.662	1.162			2
3	-.138	-.191		-.310	-.274	-.170	-.433			.274	.282	.289		.470	.880	1.024			3
4	-.110	-.190	-.298	-.448	-.304	-.214	-.407			.280		.256	.815	.753	.912	.964			4
5	-.162	-.195	.088	.500	-.432	-.417	-.371			.243	.251	.755		.838	.781	.810			5
6	-.142	.216	-.466	-.401						.242	.723	.785	.806		1.273				6
7	.214	-.462		-.384		-.369				.668	.784		.958		1.121				7
8	-.433	.219		-.391		-.365				.784			1.038		.908				8
9		-.438		-.374									.885						9
10	-.378	-.410									.910								10
11	-.262	-.389								.927	1.039								11
12	-.323	-.347								.819	.912								12
								α = -06°			δ = -30°								
1	.303	.378	.168	.154	.184	.144	.120												1
2	.182	.190	.215	.230	.206	.445	1.209			-.058		-.303		-.337	-.369	-.413			2
3	.117	.132		.526	.505	.567	1.030			-.043	-.067	-.110		-.267	-.318	-.402			3
4	.116	.097	.486	.155	.522	.625	.810			-.047		-.098	-.089	-.148	-.276	-.400			4
5	.107	.110	.557	.020	.409	.660	.756			-.078	-.073	-.119		-.096	-.108	-.269			5
6	.143	.548	.311	.168						-.055	-.080	-.054	-.413		-.396				6
7	.524	.275		.424		.880				-.067	-.058		-.353		-.402				7
8	.274	.158		.644		.794				.003			-.366		-.417				8
9		.279		.688									-.370						9
10	.316	.311									-.413								10
11	.383	.470								-.286	-.392								11
12	.390	.502								-.316	-.338								12
								α = -06°			δ = -20°								
1	.298	.379	.165	.151	.180	.146	.336												1
2	.181	.189	.211	.230	.210	.422	1.222			-.064		-.303		-.347	-.366	-.428			2
3	.115	.128		.522	.492	.375	.758			-.046	-.069	-.108		-.273	-.329	-.434			3
4	.114	.092	.477	-.081	.497	.517	.424			-.048		-.100	-.112	-.150	-.291	-.432			4
5	.102	.103	.554	-.037	.066	.658	.515			-.078	-.074	-.120		-.102	-.127	-.309			5
6	.130	.544	-.009	-.073						-.056	-.084	-.057	-.432		-.418				6
7	.515	-.042		.113		.474				-.073	-.070		-.343		-.371				7
8	-.043	.094		.357		.468				-.036			-.320		-.413				8
9		-.033		.421									-.333						9
10	.047	.048									-.434								10
11	.203	.200								-.191	-.355								11
12	.221	.241								-.284	-.268								12
								α = -06°			δ = -10°								
1	.302	.386	.169	.147	.183	.150	-.007												1
2	.185	.194	.219	.234	.217	.427	.820			-.072		-.310		-.348	-.377	-.459			2
3	.120	.132		.523	.499	.357	.552			-.055	-.087	-.112		-.275	-.329	-.460			3
4	.123	.103	.481	-.280	.496	.214	.073			-.057		-.104	-.121	-.158	-.284	-.467			4
5	.112	.108	.564	-.162	-.081	.543	.213			-.091	-.082	-.123		-.109	-.115	-.465			5
6	.131	.553	-.248	-.245						-.066	-.089	-.067	-.359		-.427				6
7	.524	-.257		-.054		.118				-.076	-.082		-.357		-.413				7
8	-.271	.032		.108		.128				-.057			-.359		-.400				8
9		-.240		.178									-.333						9
10	-.093	-.120									-.359								10
11	.046	-.006								-.134	-.359								11
12	.064	.029								-.271	-.175								12
								α = -06°			δ = 00°								
1	.311	.387	.174	.159	.195	.155	-.092												1
2	.192	.204	.222	.244	.228	.435	.341			-.056		-.288		-.342	-.358	-.396			2
3	.127	.137		.534	.505	.366	.322			-.039	-.068	-.090		-.263	-.317	-.421			3
4	.123	.105	.486	-.376	.510	.215	-.001			-.039		-.082	-.115	-.136	-.275	-.454			4
5	.115	.114	.564	-.235	-.150	.235	-.020			-.069	-.062	-.111		-.095	-.056	-.457			5
6	.124	.553	-.365	-.300						-.048	-.070	-.046	-.216		-.341				6
7	.533	-.364		-.140		-.137				-.062	-.065		-.204		-.321				7
8	-.342	.026		-.064		-.148				-.036			-.199		-.316				8
9		-.322		-.037									-.199						9
10	-.143	-.225									-.209								10
11	-.079	-.158								-.157	-.193								11
12	-.120	-.125								-.176	-.177								12

Table 24 Continued

Pressure Coefficients on Delta Wing with Control

Configuration J4 M = 1.61 R = 4.2 x 10^6

Orif	Upper Surface at Station 1	2	3	4	5	6	7	8	9	Lower Surface at Station 1	2	3	4	5	6	7	8	9	Orif
							$\alpha = -06^\circ$			$\delta = 10^\circ$									
1	.296	.385	.157	.138	.173	.120	-.142												1
2	.191	.204	.225	.245	.232	.429	.033			-.078		-.310		-.359	-.391	-.299			2
3	.127	.139		.538	.509	.360	.096			-.054	-.086	-.116		-.292	-.348	-.263			3
4	.123	.104	.493	-.424	.521	.210	-.105			-.056		-.112	-.135	-.151	-.304	-.308			4
5	.111	.111	.575	-.268	-.188	-.035	-.194			-.090	-.087	-.130		-.116	.001	-.348			5
6	.155	.560	-.424	-.365						-.071	-.090	-.071	-.025		-.259				6
7	.533	-.419		-.253		-.315				-.063	-.086		-.014		-.156				7
8	-.381	.003		-.246		-.321				-.054			.005		-.131				8
9		-.372		-.242									.003						9
10	-.216	-.330									.029								10
11	-.089	-.277								-.018	.042								11
12	-.225	-.178								.012	.037								12
							$\alpha = -06^\circ$			$\delta = 20^\circ$									
1	.294	.385	.163	.143	.168	.113	-.121												1
2	.191	.204	.229	.245	.235	.436	-.188			-.083		-.320		-.372	-.381	-.252			2
3	.132	.138		.536	.512	.361	-.071			-.059	-.092	-.121		-.303	-.371	-.054			3
4	.122	.109	.501	-.433	.525	.217	-.228			-.058		-.114	-.042	-.154	-.195	-.101			4
5	.112	.109	.580	-.139	-.188	-.191	-.331			-.093	-.093	-.136		-.114	.034	-.195			5
6	.152	.564	-.435	-.396						-.073	-.098	.059	.144		-.038				6
7	.538	-.436		-.360		-.396				-.061	.121		.324		.064				7
8	-.378	.057		-.360		-.356				.108			.354		.083				8
9		-.405		-.342									.335						9
10	-.292	-.382									.344								10
11	-.152	-.298								.280	.371								11
12	-.235	-.228								.320	.354								12
							$\alpha = -06^\circ$			$\delta = 30^\circ$									
1	.288	.393	.157	.129	.161	.114	.108												1
2	.187	.196	.224	.235	.230	.430	-.340			-.085		-.318		-.366	-.028	.093			2
3	.129	.134		.546	.510	.363	-.238			-.063	-.092	-.122		-.147	.017	.387			3
4	.125	.107	.498	-.438	.526	.216	-.422			-.059		-.115	.183	-.072	.045	.114			4
5	.112	.107	.577	-.102	-.197	-.316	-.418			-.095	-.093	-.106		.068	.112	.152			5
6	.134	.557	-.431	-.415						-.079	.032	.322	.194		.117				6
7	.537	-.431		-.373		-.361				.018	.329		.422		.174				7
8	-.355	.105		-.379		-.340				.287			.521		.149				8
9		-.439		-.355									.514						9
10	-.328	-.378									.487								10
11	-.209	-.328								.629	.613								11
12	-.287	-.290								.599	.575								12
							$\alpha = -12^\circ$			$\delta = -30^\circ$									
1	.164	.247	.020	-.110	-.047	-.252	.140												1
2	.342	.342	.370	.373	.352	.573	.944			-.270		-.450		-.467	-.481	-.416			2
3	.242	.242		.721	.716	.716	1.107			-.112	-.177	-.351		-.418	-.481	-.413			3
4	.251	.225	.683	.267	.683	.787	.921			-.108		-.215	-.251	-.416	-.434	-.408			4
5	.227	.291	.756	-.023	.411	.826	.805			-.148	-.161	-.178		-.257	-.097	-.387			5
6	.388	.754	.414	.270						-.120	-.163	-.123	-.439		-.403				6
7	.716	.373		.539		-.985				-.133	-.145		-.412		-.412				7
8	.375	.177		.793		.865				-.044			-.424		-.428				8
9		.372		.828									-.411						9
10	.416	.392									-.424								10
11	.484	.548								-.308	-.403								11
12	.478	.578								-.319	-.355								12
							$\alpha = -12^\circ$			$\delta = -20^\circ$									
1	.158	.250	.021	-.108	-.047	-.243	.312												1
2	.336	.346	.373	.379	.356	.528	1.073			-.273		-.447		-.473	-.473	-.433			2
3	.247	.242		.727	.712	.497	.808			-.120	-.180	-.354		-.426	-.487	-.426			3
4	.246	.231	.678	-.016	.659	.605	.609			-.115		-.216	-.259	-.429	-.453	-.428			4
5	.228	.259	.747	-.115	.066	.806	.640			-.155	-.163	-.179		-.269	-.123	-.377			5
6	.360	.753	.042	-.012						-.122	-.168	-.123	-.462		-.417				6
7	.707	.023		.190		.616				-.136	-.161		-.407		-.432				7
8	.020	.103		.464		.584				-.071			-.411		-.441				8
9		.028		.517									-.377						9
10	.111	.082									-.437								10
11	.275	.256								-.252	-.365								11
12	.303	.302								-.297	-.281								12

Table 24 Concluded

Pressure Coefficients on Delta Wing with Control

Configuration J4 M = 1.61 R = 4.2×10^6

Orif	Upper Surface at Station 1	2	3	4	5	6	7	8	9	Lower Surface at Station 1	2	3	4	5	6	7	8	9	Orif
							$\alpha = -12^\circ$				$\delta = -10^\circ$								
1	.166	.251	.021	-.108	-.047	-.247	.082												1
2	.342	.348	.374	.379	.359	.528	.838			-.270		-.449		-.479	-.481	-.442			2
3	.250	.244		.720	.712	.467	.589			-.114	-.180	-.354		-.433	-.490	-.431			3
4	.248	.233	.680	-.239	.660	.278	.147			-.114		-.218	-.270	-.420	-.462	-.429			4
5	.230	.262	.754	-.205	-.082	.623	.338			-.155	-.162	-.191		-.273	-.115	-.380			5
6	.358	.755	-.217	-.204						-.126	-.165	-.128	-.421		-.417				6
7	.713	-.219		.033		.235				-.142	-.155		-.417		-.430				7
8	-.232	.041		.209		.263				-.098			-.421		-.446				8
9		-.214		.252									-.347						9
10	-.028	-.094									-.380								10
11	.128	.048								-.164	-.381								11
12	.130	.088								-.283	-.211								12
							$\alpha = -12^\circ$				$\delta = 00^\circ$								
1	.159	.247	.010	-.116	-.059	-.257	-.090												1
2	.333	.339	.369	.368	.356	.514	.390			-.272		-.444		-.478	-.482	-.435			2
3	.243	.234		.714	.707	.457	.362			-.116	-.174	-.354		-.434	-.406	-.409			3
4	.243	.225	.671	-.364	.653	.251	.005			-.116		-.226	-.284	-.424	-.457	-.415			4
5	.225	.257	.749	-.286	-.178	.270	.069			-.155	-.159	-.187		-.291	-.107	-.359			5
6	.360	.743	-.359	-.272						-.125	-.168	-.125	-.344		-.413				6
7	.710	-.367		-.093		-.091				-.140	-.159		-.352		-.420				7
8	-.357	.026		-.012		-.052				-.103			-.336		-.434				8
9		-.323		.026									-.315						9
10	-.088	-.212									-.269								10
11	-.037	-.136								-.216	-.258								11
12	-.085	-.088								-.221	-.234								12
							$\alpha = -12^\circ$				$\delta = 10^\circ$								
1	.170	.244	.013	-.114	-.045	-.254	-.147												1
2	.329	.343	.367	.374	.353	.524	.055			-.285		-.448		-.483	-.497	-.461			2
3	.240	.234		.721	.708	.454	.116			-.130	-.184	-.360		-.441	-.497	-.421			3
4	.236	.225	.679	-.411	.649	.263	-.095			-.130		-.201	-.291	-.435	-.486	-.431			4
5	.224	.270	.744	-.316	-.205	-.023	-.132			-.164	-.175	-.195		-.287	-.125	-.434			5
6	.368	.743	-.416	-.328						-.138	-.183	-.140	-.226		-.423				6
7	.707	-.415		-.220		-.292				-.125	-.167		-.206		-.407				7
8	-.380	.000		-.204		-.287				-.104			-.187		-.371				8
9		-.367		-.195									-.187						9
10	-.187	-.321									-.082								10
11	-.062	-.273								-.073	-.065								11
12	-.209	-.193								-.061	-.048								12
							$\alpha = -12^\circ$				$\delta = 20^\circ$								
1	.166	.248	.010	-.119	-.052	-.256	-.135												1
2	.331	.338	.370	.379	.354	.519	-.183			-.289		-.453		-.461	-.407	-.342			2
3	.243	.240		.728	.719	.466	-.076			-.123	-.190	-.360		-.447	-.388	-.294			3
4	.237	.232	.680	-.415	.660	.256	-.205			-.123		-.203	-.220	-.405	-.383	-.307			4
5	.224	.271	.751	-.284	-.215	-.210	-.286			-.158	-.171	-.190		-.318	-.102	-.343			5
6	.370	.750	-.427	-.382						-.139	-.178	-.083	-.113		-.345				6
7	.711	-.432		-.335		-.397				-.123	-.162		-.101		-.321				7
8	-.378	.031		-.346		-.398				.027			-.045		-.307				8
9		-.417		-.343									.033						9
10	-.286	-.405									.250								10
11	-.148	-.326								.206	.271								11
12	-.222	-.233								.250	.298								12
							$\alpha = -12^\circ$				$\delta = 30^\circ$								
1	.166	.253	.018	-.118	-.046	-.243	-.067												1
2	.336	.338	.368	.370	.357	.524	-.316			-.284		-.453		-.306	-.202	-.071			2
3	.240	.235		.719	.719	.468	-.202			-.118	-.186	-.333		-.291	-.164	.046			3
4	.236	.227	.687	-.414	.658	.264	-.318			-.120		-.244	-.159	-.250	-.140	-.025			4
5	.222	.281	.755	-.253	-.213	-.302	-.376			-.156	-.166	-.211		-.189	.004	-.085			5
6	.374	.751	-.427	-.422						-.131	-.179	.114	-.145		-.110				6
7	.718	-.429		-.382		-.364				-.091	.207		-.079		-.141				7
8	-.370	.078		-.379		-.360				.191			-.010		-.208				8
9		-.444		-.358									.014						9
10	-.329	-.408									.573								10
11	-.200	-.341								.554	.580								11
12	-.278	-.289								.506	.550								12

Table 25

Pressure Coefficients on Delta Wing with Control

Configuration A M = 2.01 R = 4.2×10^6

Orif	Upper Surface at Station 1	2	3	4	5	6	7	8	9		Lower Surface at Station 1	2	3	4	5	6	7	8	9	Orif
								α = 00°			δ = 00°									
1	.364	.323	.328	.323	.333	.329	.071										.083			1
2	.059	.045	.052	.049	.041	.032	.042				.060	.053	.046	.046	.021	.026	.010			2
3	.025	.010	.003	.000	-.001	.013	-.146				.023		-.001	-.006	.001	.005				3
4	.018	.008	-.009	-.024	-.011	.039	-.142				.009	.001	-.009	-.015	-.031	.008				4
5	.008	.002	-.030	-.119	.008	-.004					.000	-.008	-.038	-.131	-.015					5
6	.010	-.027	-.008	-.114	-.025	.026					.008	-.027	.025	-.127		-.015				6
7	.001	.003	-.118	-.124	-.077	-.146					-.005	.014	-.121	-.125	.042	-.141				7
8	-.023	-.111	-.113		-.122	-.136					-.004	-.113	-.119		-.133	-.149				8
9	-.104	-.107	-.113		-.129	-.135					-.114	-.114	-.121		-.120	-.134				9
10	-.075	-.109			-.122						-.059	-.110			-.129					10
11											-.121									11
								α = 00°			δ = 10°									
1	.366	.325	.331		.337	.331	-.057	.052									.244			1
2	.060	.046	.056		.048	.037	-.093	-.100			.062	.056			.026	.027	.218	.115		2
3	.027	.012			.004	.017	-.202	-.098			.025				.005	.006	-.015	.237		3
4	.020	.010			-.006	.046	-.191	-.174			.012	.003			-.027	.028	-.042	.051		4
5	.010	.004			.013	.034		-.207			.002	-.006			-.009			-.020		5
6	.013	-.027			-.012	-.113					.009	-.024				.070				6
7	.003	.005			-.159	-.205					-.003	.017			.120	.016				7
8	-.020	-.109			-.182	-.208					-.003	-.110			-.013	.019				8
9	-.100	-.104			-.179	-.208					-.112	-.109			-.018	.017				9
10	-.074	-.107			-.177						-.056	-.107			-.028					10
11											-.119									11
								α = 00°			δ = 20°									
1	.367	.326	.331	.327	.337	.331	-.149	.093									.455			1
2	.062	.048	.056	.056	.049	.039	-.176	-.191			.063	.055	.049	.049	.024	.026	.480	.234		2
3	.028	.013	.009	.006	.005	.020	-.242	-.210			.026		.003	-.002	.006	.006	.161	.504		3
4	.022	.012	-.004	-.017	-.005	.055	-.233	-.234			.013	.005	-.005	-.010	-.028	.059	.146	.200		4
5	.012	.006	-.022	-.128	.014	.067		-.240			.003	-.005	-.035	-.100	-.005			.183		5
6	.013	-.026	-.002	-.142	.006	-.192					.011	-.024	.028	-.102		.149				6
7	.004	.006	-.111	-.158	-.214	-.244					-.001	.016	-.117	-.140	.110	.273				7
8	-.019	-.107	-.107		-.229	-.244					-.001	-.110	-.114		.192	.261				8
9	-.099	-.103	-.107		-.226	-.241					-.111	-.111	-.116		.171	.240				9
10	-.075	-.105			-.229						-.054	-.107			.149					10
11											-.117									11
								α = 00°			δ = 30°									
1	.364	.325	.330	.326	.336	.331	-.230	.299									.823			1
2	.062	.046	.055	.055	.048	.041	-.254	-.246			.060	.053	.048	.046	.021	.024	.784	.469		2
3	.027	.012	.008	.006	.003	.021	-.268	-.262			.023		.001	-.005	.002	.006	.500	.793		3
4	.023	.011	-.003	-.018	-.006	.095	-.266	-.267			.013	.003	-.006	-.008	-.031	.215	.524	.355		4
5	.012	.005	-.022	-.131	.012	.174		-.266			.000	-.007	-.038	-.087	.019			.547		5
6	.012	-.027	-.002	-.146	.060	-.241					.009	-.026	.026	-.094		.321				6
7	.001	.006	-.113	-.161	-.258	-.259					-.002	.015	-.119	-.149	.089	.685				7
8	-.019	-.110	-.108		-.267	-.259					-.002	-.112	-.116		.539	.627				8
9	-.099	-.105	-.108		-.264	-.255					-.114	-.113	-.116		.478	.539				9
10	-.081	-.107			-.260						-.055	-.109			.424					10
11											-.120									11
								α = 03°			δ = 00°									
1	.366	.257	.306	.287	.319	.345	-.070	-.034									.233			1
2	.012	-.028	-.053	-.064	-.070	-.100	-.092	-.084			.123	.144	.141	.145	.121	.135	.119	.187		2
3	-.005	-.030	-.043	-.050	-.062	-.079	-.223	-.088			.067		.070	.056	.075	.093	-.071	.149		3
4	-.004	-.029	-.047	-.066	-.063	-.023	-.202	-.162			.059	.053	.046	.038	.033	.082	-.071	-.016		4
5	-.021	-.033	-.048	-.143	-.042	-.034		-.225			.047	.041	.014	-.085	.045			-.080		5
6	-.019	-.056	-.038	-.138	-.019	-.053					.053	.013	.075	-.085		.117				6
7	-.026	-.026	-.138	-.147	-.136	-.201					.039	.063	-.085	-.089	.128	-.079				7
8	-.042	-.130	-.133		-.156	-.194					.029	-.080	-.082		-.094	-.066				8
9	-.125	-.127	-.132		-.163	-.194					-.074	-.080	-.083		-.081	-.059				9
10	-.098	-.128			-.163						-.038	-.077			-.071					10
11											-.087									11

Table 25 Continued

Pressure Coefficients on Delta Wing with Control

Configuration A M = 2.01 R = 4.2 x 10^6

Orif	Upper Surface at Station 1	2	3	4	5	6	7	8	9		Lower Surface at Station 1	2	3	4	5	6	7	8	9	Orif
								α = 06°			δ = -30°									
1	.353	.215	.258	.224	.255	.285	.414	.001									-.115			1
2	-.049	-.128	-.150	-.178	-.171	-.194	.499	.122			.185	.216	.226	.230	.210	.228	-.189	-.211		2
3	-.037	-.063	-.121	-.143	-.156	-.172	.144	.540			.121		.128	.120	.146	.172	-.257	-.217		3
4	-.040	-.061	-.082	-.071	-.133	.001	.174	.329			.107	.106	.104	.097	.094	.173	-.240	-.260		4
5	-.057	-.072	-.089	-.157	-.042	.053		.229			.102	.092	.066	-.059	.104			-.264		5
6	-.052	-.083	-.075	-.186	.008	.089					.101	.057	.131	-.076		-.214				6
7	-.056	-.056	-.165	-.216	-.016	.280					.084	.114	-.048	-.101	-.193	-.267				7
8	-.063	-.150	-.160		.356	.277					.068	-.046	-.045		-.265	-.258				8
9	-.149	-.149	-.149		.328	.265					-.038	-.047	-.049		-.261	-.226				9
10	-.124	-.152			.295						-.018	-.044			-.262					10
11											-.042									11
								α = 06°			δ = -20°									
1	.353	.215	.259	.226	.258	.285	.122	-.102									-.008			1
2	-.047	-.127	-.148	-.175	-.170	-.194	.196	-.010			.186	.216	.226	.232	.210	.226	-.116	-.129		2
3	-.036	-.062	-.121	-.140	-.156	-.158	-.057	.225			.122		.128	.121	.146	.171	-.215	-.103		3
4	-.038	-.060	-.082	-.102	-.154	-.106	-.045	.126			.107	.107	.104	.099	.093	.170	-.200	-.218		4
5	-.056	-.071	-.089	-.157	-.121	-.072		-.008			.102	.093	.066	-.057	.103			-.227		5
6	-.050	-.082	-.075	-.165	-.020	.067					.102	.058	.130	-.074		-.139				6
7	-.056	-.055	-.165	-.200	-.078	.012					.085	.114	-.047	-.099	-.111	-.239				7
8	-.063	-.149	-.161		.104	.021					.069	-.045	-.044		-.231	-.228				8
9	-.148	-.148	-.157		.084	.013					-.038	-.045	-.048		-.220	-.208				9
10	-.124	-.150			.066						-.017	-.042			-.225					10
11											-.042									11
								α = 06°			δ = -10°									
1	.351	.214	.258	.226	.257	.285	-.059	-.116									.164			1
2	-.049	-.128	-.150	-.176	-.171	-.193	-.038	-.080			.183	.215	.227	.230	.209	.226	.016	.024		2
3	-.037	-.063	-.121	-.141	-.156	-.172	-.204	-.019			.120		.128	.118	.145	.171	-.129	.045		3
4	-.040	-.061	-.082	-.105	-.158	-.140	-.198	-.086			.106	.106	.104	.097	.092	.169	-.114	-.092		4
5	-.057	-.071	-.088	-.159	-.126	-.111		-.195			.099	.092	.066	-.058	.103			-.154		5
6	-.052	-.082	-.074	-.160	-.023	-.139					.101	.056	.130	-.071		.005				6
7	-.056	-.056	-.163	-.170	-.120	-.165					.083	.113	-.048	-.094	.024	-.154				7
8	-.063	-.150	-.160		-.093	-.160					.068	-.046	-.045		-.151	-.137				8
9	-.148	-.148	-.157		-.102	-.162					-.039	-.048	-.048		-.143	-.127				9
10	-.125	-.151			-.113						-.017	-.044			-.137					10
11											-.044									11
								α = 06°			δ = 00°									
1	.351	.216	.259	.225	.255	.284	-.142	-.092									.270			1
2	-.043	-.107	-.135	-.164	-.167	-.187	-.150	-.153			.179	.209	.222	.222	.205	.223	.185	.250		2
3	-.034	-.059	-.118	-.130	-.153	-.172	-.240	-.149			.116		.122	.114	.140	.167	-.032	.215		3
4	-.037	-.059	-.081	-.107	-.158	-.137	-.220	-.200			.103	.099	.100	.093	.088	.167	-.053	.029		4
5	-.055	-.070	-.068	-.174	-.128	-.093		-.234			.096	.089	.062	-.055	.098			-.039		5
6	-.049	-.078	-.075	-.168	-.030	-.127					.100	.056	.125	-.050		.194				6
7	-.055	-.056	-.165	-.180	-.167	-.219					.082	.113	-.050	-.055	.194	-.043				7
8	-.063	-.150	-.163		-.189	-.219					.067	-.048	-.048		-.066	-.040				8
9	-.148	-.149	-.158		-.180	-.220					-.040	-.048	-.051		-.047	-.033				9
10	-.125	-.150			-.175						-.017	-.045			-.046					10
11											-.044									11
								α = 06°			δ = 10°									
1	.351	.215	.258	.225	.256	.286	-.216	-.102									.489			1
2	-.049	-.125	-.148	-.175	-.169	-.191	-.228	-.222			.182	.214	.224	.228	.206	.225	.428	.634		2
3	-.037	-.062	-.120	-.140	-.156	-.177	-.262	-.233			.119		.125	.117	.143	.169	.136	.452		3
4	-.040	-.061	-.082	-.107	-.158	-.136	-.252	-.246			.104	.104	.102	.096	.091	.169	.121	.159		4
5	-.056	-.071	-.081	-.181	-.126	-.068		-.255			.098	.091	.065	-.035	.100			.162		5
6	-.052	-.082	-.074	-.182	-.027	-.201					.102	.056	.129	-.010		.472				6
7	-.057	-.056	-.164	-.193	-.216	-.252					.082	.113	-.049	-.032	.334	.191				7
8	-.062	-.149	-.161		-.237	-.254					.067	-.048	-.046		.092	.182				8
9	-.147	-.148	-.158		-.215	-.236					-.040	-.048	-.050		.098	.165				9
10	-.125	-.151			-.200						-.016	-.045			.092					10
11											-.045									11

Table 25 Continued

Pressure Coefficients on Delta Wing with Control

Configuration A M = 2.01 R = 4.2×10^6

Orif	Upper Surface at Station 1	2	3	4	5	6	7	8	9		Lower Surface at Station 1	2	3	4	5	6	7	8	9	Orif
								$\alpha = 06^\circ$			$\delta = 20^\circ$									
1	.351	.215	.258	.225	.257	.287	-.258	-.069									.821			1
2	-.050	-.127	-.149	-.176	-.169	-.192	-.263	-.257			.183	.214	.223	.228	.206	.224	.692	1.287		2
3	-.038	-.063	-.122	-.142	-.155	-.176	-.276	-.264			.120		.125	.117	.142	.168	.428	.712		3
4	-.041	-.062	-.083	-.107	-.157	-.131	-.271	-.269			.104	.104	.101	.096	.090	.170	.438	.319		4
5	-.057	-.072	-.086	-.182	-.125	.063		-.267			.098	.090	.064	-.010	.100			.460		5
6	-.052	-.082	-.075	-.190	-.010	-.243					.101	.056	.127	.005		.694				6
7	-.058	-.056	-.165	-.196	-.250	-.270					.082	.112	-.050	-.061	.302	.547				7
8	-.063	-.150	-.163		-.255	-.265					.067	-.048	-.047		.353	.506				8
9	-.149	-.149	-.160		-.239	-.251					-.042	-.048	-.050		.360	.435				9
10	-.127	-.151			-.233						-.016	-.045			.337					10
11											-.046									11
								$\alpha = 06^\circ$			$\delta = 30^\circ$									
1	.352	.215	.259	.226	.258	.287	-.274	-.061									1.170			1
2	-.048	-.127	-.148	-.174	-.169	-.190	-.276	-.273			.184	.215	.224	.229	.206	.222	.992	.982		2
3	-.036	-.062	-.121	-.139	-.154	-.174	-.281	-.275			.120		.126	.118	.141	.167	.804	.971		3
4	-.039	-.060	-.082	-.104	-.156	-.118	-.278	-.276			.106	.105	.102	.101	.089	.477	.741	.748		4
5	-.055	-.070	-.087	-.181	-.127	.364		-.273			.098	.092	.064	.020	.182			.767		5
6	-.051	-.082	-.074	-.189	.115	-.264					.102	.057	.127	.028		.726				6
7	-.057	-.054	-.164	-.191	-.265	-.281					.082	.112	-.049	-.065	.268	.946				7
8	-.062	-.149	-.161		-.266	-.272					.067	-.048	-.046		.731	.820				8
9	-.147	-.147	-.158		-.257	-.264					-.041	-.048	-.044		.666	.723				9
10	-.127	-.149			-.255						-.014	-.045			.591					10
11											-.047									11
								$\alpha = 09^\circ$			$\delta = 00^\circ$									
1	.334	.177	.204	.160	.150	.196	-.167	-.142									.325			1
2	-.107	-.184	-.212	-.232	-.230	-.247	-.165	-.194			.255	.291	.305	.306	.286	.304	.258	.316		2
3	-.064	-.127	-.187	-.201	-.216	-.229	-.189	-.166			.174		.199	.181	.212	.248	.021	.286		3
4	-.066	-.095	-.163	-.192	-.216	-.199	-.179	-.175			.160	.164	.164	.162	.157	.232	-.012	.073		4
5	-.085	-.103	-.117	-.210	-.205	-.088		-.167			.159	.146	.120	-.007	.163			.018		5
6	-.078	-.107	-.113	-.214	-.012	-.164					.154	.104	.189	-.008		.258				6
7	-.083	-.084	-.187	-.221	-.185	-.179					.131	.170	-.010	-.016	.284	.026				7
8	-.082	-.165	-.183		-.186	-.187					.114	-.010	-.007		-.016	.002				8
9	-.166	-.169	-.185		-.179	-.195					.000	-.008	-.012		.003	.009				9
10	-.147	-.170			-.171						.015	-.006			-.002					10
11											.003									11
								$\alpha = 12^\circ$			$\delta = -30^\circ$									
1	.299	.133	.131	.092	.021	.060	.024	-.247									-.037			1
2	-.176	-.254	-.279	-.290	-.280	-.275	.179	-.186			.333	.367	.374	.374	.353	.374	-.143	-.169		2
3	-.098	-.193	-.246	-.263	-.266	-.278	-.070	.218			.237		.267	.256	.288	.319	-.233	-.122		3
4	-.089	-.125	-.219	-.232	-.264	-.233	-.056	.139			.218	.229	.229	.222	.225	.296	-.214	-.227		4
5	-.115	-.133	-.181	-.269	-.210	-.217		.017			.221	.204	.181	.029	.233			-.238		5
6	-.112	-.136	-.178	-.269	.035	-.218					.212	.156	.252	.005		-.170				6
7	-.114	-.119	-.224	-.287	-.136	-.046					.183	.230	.033	-.031	-.156	-.258				7
8	-.107	-.190	-.215		-.003	-.027					.165	.032	.041		-.258	-.250				8
9	-.190	-.189	-.226		-.016	-.031					.038	.028	.031		-.261	-.218				9
10	-.172	-.196			-.022						.052	.034			-.257					10
11											.042									11
								$\alpha = 12^\circ$			$\delta = -20^\circ$									
1	.299	.134	.133	.093	.024	.062	-.126	-.220									.081			1
2	-.175	-.252	-.277	-.288	-.278	-.275	-.064	-.220			.335	.367	.374	.375	.353	.373	-.041	-.058		2
3	-.097	-.191	-.245	-.261	-.265	-.270	-.215	-.034			.237		.268	.257	.287	.320	-.168	-.008		3
4	-.098	-.126	-.217	-.251	-.262	-.255	-.211	-.078			.218	.229	.230	.225	.226	.294	-.157	-.128		4
5	-.116	-.133	-.179	-.261	-.236	-.189		-.176			.222	.205	.182	.033	.235			-.185		5
6	-.111	-.134	-.176	-.260	.036	-.242					.214	.157	.254	.008		-.059				6
7	-.113	-.118	-.222	-.287	-.186	-.196					.184	.232	.033	-.027	-.040	-.200				7
8	-.107	-.190	-.213		-.160	-.191					.165	.033	.041		-.202	-.193				8
9	-.189	-.189	-.227		-.171	-.192					.038	.031	.032		-.205	-.175				9
10	-.171	-.194			-.172						.052	.034			-.207					10
11											.045									11

Table 25 Continued

Pressure Coefficients on Delta Wing with Control

Configuration A M = 2.01 R = 4.2×10^6

Orif	Upper Surface at Station 1	2	3	4	5	6	7	8	9	Lower Surface at Station 1	2	3	4	5	6	7	8	9	Orif
								$\alpha = 12^\circ$		$\delta = -10^\circ$									
1	.299	.133	.131	.092	.023	.062	-.223	-.174								.236			1
2	-.175	-.252	-.279	-.288	-.280	-.283	-.212	-.254		.335	.367	.373	.374	.352	.371	.101	.113		2
3	-.097	-.191	-.246	-.261	-.266	-.275	-.276	-.196		.239		.267	.257	.284	.319	-.066	.139		3
4	-.099	-.125	-.219	-.257	-.264	-.264	-.266	-.228		.218	.230	.229	.225	.224	.290	-.065	-.012		4
5	-.116	-.133	-.180	-.262	-.248	-.114		-.256		.223	.206	.181	.033	.232			-.071		5
6	-.111	-.135	-.178	-.255	.031	-.264				.214	.157	.252	.011		.104				6
7	-.113	-.118	-.223	-.276	-.244	-.268				.183	.230	.033	-.023	.121	-.098				7
8	-.106	-.190	-.215		-.252	-.269				.166	.031	.040		-.108	-.097				8
9	-.189	-.188	-.229		-.258	-.269				.038	.029	.031		-.104	-.086				9
10	-.172	-.194			-.254					.052	.033			-.109					10
11										.044									11
								$\alpha = 12^\circ$		$\delta = 00^\circ$									
1	.303	.142	.139	.099	.028	.067	-.220	-.158								.377			1
2	-.153	-.217	-.245	-.258	-.260	-.276	-.222	-.234		.333	.362	.373	.371	.353	.373	.320	.380		2
3	-.089	-.168	-.225	-.231	-.247	-.259	-.229	-.222		.236		.268	.257	.290	.320	.070	.348		3
4	-.083	-.117	-.200	-.241	-.250	-.251	-.223	-.226		.217	.223	.231	.225	.226	.294	.059	.102		4
5	-.109	-.126	-.138	-.248	-.237	-.069		-.214		.218	.203	.180	.042	.234			.095		5
6	-.104	-.124	-.170	-.250	.018	-.211				.214	.156	.251	.039		.333				6
7	-.106	-.114	-.216	-.245	-.219	-.227				.182	.232	.034	.039	.357	.075				7
8	-.102	-.184	-.207		-.229	-.234				.163	.031	.041		.031	.055				8
9	-.185	-.183	-.221		-.223	-.233				.040	.031	.031		.055	.064				9
10	-.167	-.188			-.203					.054	.034			.048					10
11										.044									11
								$\alpha = 12^\circ$		$\delta = 10^\circ$									
1	.302	.136	.135	.097	.027	.067	-.255	-.138								.593			1
2	-.167	-.234	-.259	-.273	-.269	-.287	-.255	-.258		.336	.370	.376	.376	.353	.375	.562	.768		2
3	-.093	-.182	-.237	-.247	-.257	-.266	-.254	-.254		.240		.269	.259	.291	.322	.306	.585		3
4	-.084	-.120	-.210	-.252	-.256	-.261	-.250	-.252		.219	.232	.233	.227	.226	.294	.292	.240		4
5	-.110	-.128	-.154	-.264	-.242	.024		-.241		.221	.206	.184	.068	.235			.334		5
6	-.108	-.129	-.172	-.259	.037	-.243				.216	.158	.255	.104		.619				6
7	-.109	-.114	-.218	-.261	-.247	-.254				.185	.233	.037	.073	.553	.348				7
8	-.102	-.185	-.208		-.255	-.260				.165	.034	.045		.216	.327				8
9	-.185	-.183	-.223		-.243	-.252				.041	.031	.034		.230	.296				9
10	-.168	-.189			-.230					.056	.036			.217					10
11										.045									11
								$\alpha = 12^\circ$		$\delta = 20^\circ$									
1	.302	.135	.134	.095	.026	.067	-.275	.012								1.013			1
2	-.172	-.246	-.270	-.281	-.276	-.293	-.276	-.283		.337	.369	.375	.375	.353	.373	.822	1.524		2
3	-.095	-.188	-.241	-.255	-.262	-.271	-.272	-.274		.240		.268	.257	.288	.319	.674	.816		3
4	-.087	-.123	-.215	-.254	-.260	-.257	-.270	-.272		.220	.232	.230	.226	.223	.316	.618	.612		4
5	-.113	-.131	-.168	-.275	-.243	.297		-.262		.221	.207	.182	.105	.234			.654		5
6	-.110	-.132	-.174	-.259	.071	-.273				.216	.158	.253	.136		.818				6
7	-.112	-.116	-.220	-.240	-.272	-.276				.184	.231	.034	.048	.532	.752				7
8	-.104	-.187	-.210		-.273	-.278				.164	.033	.042		.515	.672				8
9	-.187	-.185	-.225		-.272	-.271				.038	.030	.034		.513	.597				9
10	-.172	-.192			-.263					.056	.035			.484					10
11										.042									11
								$\alpha = 12^\circ$		$\delta = 30^\circ$									
1	.302	.136	.135	.096	.027	.069	-.281	-.007								1.114			1
2	-.171	-.247	-.272	-.281	-.275	-.281	-.283	-.292		.337	.369	.375	.375	.352	.371	1.189	1.280		2
3	-.094	-.187	-.241	-.256	-.262	-.272	-.279	-.281		.241		.269	.256	.287	.319	1.041	1.154		3
4	-.087	-.122	-.215	-.250	-.260	-.236	-.277	-.279		.221	.233	.230	.243	.223	.759	.961	.999		4
5	-.111	-.129	-.171	-.277	-.243	.540		-.273		.222	.207	.182	.168	.502			.947		5
6	-.109	-.132	-.175	-.255	.290	-.282				.217	.158	.252	.168		.833				6
7	-.111	-.114	-.219	-.248	-.281	-.281				.185	.230	.034	.023	.535	1.218				7
8	-.103	-.186	-.211		-.281	-.283				.165	.033	.042		.930	1.052				8
9	-.185	-.195	-.223		-.281	-.279				.039	.030	.063		.868	.961				9
10	-.171	-.190			-.270					.056	.035			.785					10
11										.042									11

Table 25 Concluded

Pressure Coefficients on Delta Wing with Control

Configuration A M = 2.01 R = 4.2×10^6

Orif	Upper Surface at Station										Lower Surface at Station									Orif
	1	2	3	4	5	6	7	8	9		1	2	3	4	5	6	7	8	9	
	$\alpha = 15^\circ$										$\delta = 00^\circ$									
1	.276	.096	.049	.023	-.059	-.065	-.235	-.158									.394	.448		1
2	-.208	-.270	-.292	-.299	-.296	-.304	-.224	-.261			.381	.436	.437	.431	.412	.434	.385	.414		2
3	-.117	-.246	-.271	-.278	-.286	-.297	-.230	-.219			.297		.334	.320	.353	.377	.128	.133		3
4	-.115	-.151	-.237	-.286	-.280	-.291	-.229	-.212			.283	.294	.293	.294	.287	.352	.119			4
5	-.139	-.156	-.198	-.284	-.271	-.022		-.210			.284	.268	.241	.091	.297					5
6	-.133	-.151	-.204	-.278	.063	-.265					.270	.209	.318	.089		.418				6
7	-.134	-.142	-.247	-.263	-.235	-.234					.229	.296	.076	.078	.445	.132				7
8	-.123	-.209	-.247		-.237	-.240					.218	.076	.085		.089	.115				8
9	-.204	-.205	-.245		-.232	-.232					.081	.073	.072		.111	.122				9
10	-.188	-.211			-.215						.095	.077			.103					10
11											.089									11

[redacted]

Table 26

Pressure Coefficients on Delta Wing with Control

Configuration E M = 2.01 R = 4.2×10^6

Orif	Upper Surface at Station 1	2	3	4	5	6	7	8	9	Lower Surface at Station 1	2	3	4	5	6	7	8	9	Orif
								α = 00°		δ = 00°									
1	.368	.338	.332	.330	.327	.316	.286	-.140									-.122		1
2	.067	.051	.061	.060	.066	.038	.047			.060	.053	.049	.047	.052	.042	.054			2
3	.033	.016	.012	.008	.017	.023	-.129			.027		.003	.002	.022	.019	-.106			3
4	.026	.014	-.002	-.008	.015	-.002	-.147			.015	.005	-.002	-.001	.005	-.086	-.116			4
5	.013	.007	-.026	.118	.003	-.125				.005	-.005	-.033	-.117	.002	-.113				5
6	.016	.030	.008	-.108	-.113	-.131				.009	.002	.006	-.109	-.109	-.121				6
7	.010	.010	-.103	-.105	-.106					-.005	.004	-.106	-.103	-.120					7
8		-.099	-.104							.004	-.104	-.106							8
9	-.089	-.100	-.107							-.089	-.098	-.102							9
10	-.060	.127								-.070	-.102								10
11	-.087									-.096									11
								α = 00°		δ = 10°									
1	.369			.331	.342	.204	.212	-.219									.019		1
2	.072			.065	-.024	-.153	-.187			.064			.051	.206	.276	.259			2
3	.038			-.040	-.028	-.118	-.221			.032			.070	.352	.162	.021			3
4	.033			-.051	-.044	-.084	-.214			.020			.019	.078	.016	.012			4
5	.019			.113	-.045	-.169				.012			-.113	.056	-.031				5
6	.022			-.126	-.158	-.167				.016			-.129	-.035	-.040				6
7	.016			-.129	-.148					.002		-.074	-.116	-.064					7
8										.007		-.074							8
9	-.079									-.080		-.068							9
10	-.053									-.060									10
11	-.078																		11
								α = 00°		δ = 20°									
1	.367	.336	.330	.328	.304	.091	.098	-.236									.146		1
2	.067	.053	.064	.062	-.147	-.190	-.222			.059	.053	.049	.048	.431	.439	.429			2
3	.032	.017	.015	.077	-.073	-.182	-.244			.026		.004	.106	.367	.351	.161			3
4	.026	.015	.002	-.118	-.088	-.171	-.232			.015	.008	-.001	-.051	.283	.125	.147			4
5	.015	.008	.012	.102	-.090	-.212				.003	-.003	-.036	-.172	.138	.072				5
6	.016	.031	-.015	-.142	-.188	-.198				.009	.004	.063	-.171	.048	.066				6
7	.010	.015	-.136	-.136	-.179					-.003	.006	-.049	-.137	.018					7
8		-.077	-.145							.000	-.099	-.056							8
9	-.085	-.089	-.151							-.085	-.086	-.055							9
10	-.060	.108								-.067	-.070								10
11	-.085									-.094									11
								α = 00°		δ = 30°									
1	.366	.336	.329	.328	.176	-.077	-.113	-.253									.521		1
2	.068	.053	.063	.061	-.226	-.232	-.255			.059	.052	.046	.043	.935	.789	.704			2
3	.033	.017	.015	.816	-.172	-.243	-.267			.025		.002	.021	.646	.704	.491			3
4	.030	.016	.001	-.223	-.145	-.243	-.254			.019	.009	-.003	-.154	.809	.384	.475			4
5	.015	.009	.110	.098	-.172	-.261				.003	-.003	-.040	-.188	.395	.392				5
6	.016	.032	.015	-.192	-.230	-.247				.009	.003	.122	-.201	.307	.363				6
7	.010	.046	-.152	-.173	-.222					-.003	.005	-.017	-.210	.263					7
8		-.044	-.181							-.003	-.099	-.039							8
9	-.085	-.071	-.193							-.086	-.046	-.051							9
10	-.056	.103								-.066	-.031								10
11	-.069									-.093									11
								α = 03°		δ = 00°									
1	.363	.274	.297	.277	.307	.261	.262	-.221									-.046		1
2	-.001	-.052	-.071	-.077	-.100	-.111	-.121			.121	.149	.146	.151	.160	.161	.161			2
3	-.016	-.039	-.052	-.064	-.096	-.101	-.215			.071		.070	.062	.104	.106	-.037			3
4	-.013	-.034	-.054	-.071	-.087	-.103	-.206			.058	.057	.046	.031	.082	-.017	-.050			4
5	-.028	-.044	-.091	.135	-.080	-.189				.047	.039	.011	-.079	.057	-.050				5
6	-.029	-.018	-.039	-.147	-.183	-.197				.051	.050	.050	-.073	-.069	-.066				6
7	-.033	-.034	-.138	-.143	-.171					.028	.043	-.073	-.073	-.076					7
8		-.131	-.138							.040	-.076	-.075							8
9	-.124	-.133	-.140							-.062	-.074	-.071							9
10	-.097	.135								-.042	-.076								10
11	-.119									-.072									11

Table 26 Continued

Pressure Coefficients on Delta Wing with Control

Configuration E M = 2.01 R = 4.2×10^6

Orif	Upper Surface at Station 1	2	3	4	5	6	7	8	9		Lower Surface at Station 1	2	3	4	5	6	7	8	9	Orif
								$\alpha = 06^\circ$			$\delta = -30^\circ$									
1	.349	.217	.251	.218	.141	.008	-.049	.170			.183	.212	.224	.229	-.146	-.210	-.207	-.248		1
2	-.056	-.136	-.155	-.179	.915	.475	.518				.118		.126	.680	-.076	-.214	-.239			2
3	-.043	-.074	-.126	-.116	.511	.376	.150				.102	.100	.100	-.188	-.092	-.216	-.246			3
4	-.048	-.068	-.088	-.216	.050	.292	.095				.096	.088	.127	-.210	-.173	-.191				4
5	-.062	-.078	-.091	.113	-.006	.068					.099	.099	.102	-.175	-.223	-.198				5
6	-.059	-.049	.017	-.244	.003	.025					.064	.107	-.086	-.139	-.237					6
7	-.059	-.065	-.117	-.240	.022						.090	.002	-.110							7
8		-.147	-.125								-.026	-.015	-.119							8
9	-.141	-.108	-.136								-.006	-.041								9
10	-.105	.116									-.025									10
11	-.136																			11
								$\alpha = 06^\circ$			$\delta = -20^\circ$									
1	.351	.221	.254	.223	.243	.191	.106	.015			.188	.217	.228	.232	-.029	-.171	-.167	-.236		1
2	-.048	-.125	-.145	-.172	.538	.260	.291				.122		.127	.185	-.012	-.175	-.211			2
3	-.035	-.064	-.117	-.165	.207	.160	-.008				.107	.106	.104	-.089	-.058	-.161	-.217			3
4	-.041	-.059	-.080	-.193	-.123	.087	-.045				.100	.094	.103	-.125	-.140	-.146				4
5	-.054	-.068	-.082	.124	-.076	-.087					.103	.104	.085	-.125	-.213	-.149				5
6	-.051	-.039	-.012	-.201	-.107	-.101					.070	.102	-.066	-.117	-.221					6
7	-.051	-.056	-.125	-.193	-.085						.094	-.014	-.084							7
8		-.137	-.134								-.016	-.021	-.092							8
9	-.132	-.117	-.134								.000	-.038								9
10	-.098	.127									-.027									10
11	-.125																			11
								$\alpha = 06^\circ$			$\delta = -10^\circ$									
1	.354	.222	.257	.225	.301	.272	.208	-.178			.189	.218	.229	.233	.203	.041	.087	-.012		1
2	-.051	-.129	-.149	-.171	.034	-.038	-.011				.124		.131	.102	.146	.121	.001			2
3	-.038	-.067	-.120	-.145	-.153	-.086	-.197				.107	.106	.104	-.006	.109	.019	-.027			3
4	-.043	-.061	-.082	-.165	-.156	-.122	-.213				.102	.095	.091	-.066	.042	.009				4
5	-.056	-.071	-.041	.135	-.124	-.209					.106	.104	.090	-.081	-.062	-.030				5
6	-.054	-.039	-.046	-.176	-.200	-.221					.072	.102	-.056	-.083	-.056					6
7	-.054	-.057	-.145	-.174	-.190						.094	-.028	-.066							7
8		-.140	-.147								-.017	-.029	-.067							8
9	-.139	-.132	-.146								.002	-.039								9
10	-.104	.140									-.032									10
11	-.131																			11
								$\alpha = 06^\circ$			$\delta = 00^\circ$									
1	.353	.227	.258	.223	.277	.205	.218	-.230			.185	.209	.226	.225	.252	.238	.239	.017		1
2	-.044	-.102	-.128	-.142	-.142	-.156	-.162				.120		.127	.124	.178	.181	.027			2
3	-.033	-.059	-.116	-.130	-.132	-.153	-.240				.106	.096	.102	.088	.154	.035	.009			3
4	-.038	-.059	-.078	-.115	-.121	-.161	-.230				.098	.092	.063	-.025	.118	.002				4
5	-.054	-.068	-.019	.142	-.122	-.215					.103	.103	.103	-.030	-.020	-.020				5
6	-.051	-.035	-.068	-.172	-.193	-.215					.073	.098	-.034	-.028	-.034					6
7	-.052	-.057	-.159	-.170	-.186						.092	-.037	-.037							7
8		-.142	-.157								-.019	-.031	-.034							8
9	-.137	-.145	-.161								.002	-.035								9
10	-.104	.149									-.035									10
11	-.129																			11
								$\alpha = 06^\circ$			$\delta = 10^\circ$									
1	.351	.219	.254	2.741	.303	.091	.109	-.237			.185	.214	2.745	.229	.376	.406	.391	.110		1
2	-.052	-.127	-.149	2.351	-.183	-.192	-.208				.119		2.646	.197	.437	.333	.137			2
3	-.039	-.070	2.397	2.324	-.153	-.199	-.247				.103	.102	2.620	.159	.272	.122	.124			3
4	-.045	-.064	2.437	2.408	-.147	-.201	-.236				.096	.091	2.580	-.001	.209	.079				4
5	-.059	-.074	2.460	2.645	-.124	-.234					.102	.101	2.648	-.045	.083	.067				5
6	-.056	-.043	2.428	-.170	-.196	-.229					.073	.095	2.522	-.088	.037					6
7	-.057	-.051	2.341	-.166	-.186						.088	-.041	2.525							7
8		-.139	2.343								-.020	-.036	2.529							8
9	-.141	-.152	2.350								-.003	-.030								9
10	-.107	.126									-.038									10
11	-.130																			11

Table 26 Continued

Pressure Coefficients on Delta Wing with Control

Configuration E M = 2.01 R = 4.2×10^6

Orif	Upper Surface at Station 1	2	3	4	5	6	7	8	9		Lower Surface at Station 1	2	3	4	5	6	7	8	9	Orif
								α = 06°			δ = 20°									
1	.354	.223	.258	.223	.269	-.006	-.037	-.252										.350		1
2	-.039	-.117	-.137	-.165	-.214	-.218	-.240				.190	.218	.227	.231	.505	.676	.592			2
3	-.027	-.058	-.112	-.010	-.192	-.232	-.265				.127		.129	.185	.604	.587	.348			3
4	-.033	-.053	-.074	-.168	-.176	-.235	-.255				.110	.109	.103	.138	.618	.293	.339			4
5	-.045	-.063	-.034	.124	-.139	-.258					.104	.098	.064	-.077	.399	.262				5
6	-.043	-.033	-.103	-.183	-.214	-.250					.109	.107	.181	-.118	.251	.251				6
7	-.044	-.004	-.173	-.155	-.209						.082	.102	.059	-.107	.190					7
8		-.109	-.188								.095	-.030	.062							8
9	-.124	-.132	-.193								-.011	-.016	.046							9
10	-.084	.128									.006	.017								10
11	-.094										-.027									11
								α = 06°			δ = 30°									
1	.351	.219	.255	.221	.172	-.125	-.157	-.244										.669		1
2	-.052	-.129	-.149	-.174	-.243	-.237	-.259				.184	.214	.223	.228	.879	.947	.768			2
3	-.039	-.070	-.121		-.233	-.256	-.272				.120		.126	.207	.960	.902	.688			3
4	-.045	-.064	-.080	-.195	-.219	-.258	-.261				.104	.102	.099	.108	1.026	.533	.659			4
5	-.058	-.074	.009	.116	-.174	-.271					.098	.091	.059	-.125	.722	.578				5
6	-.056	-.042	-.096	-.213	-.245	-.262					.102	.101	.254	-.163	.529	.543				6
7	-.056	.027	-.212	-.201	-.241						.074	.095	.118	-.128	.428					7
8		-.107	-.228								.087	-.037	.077							8
9	-.124	-.141	-.230								-.026	.055	.039							9
10	-.046	.118									-.003	.071								10
11	-.060										-.033									11
								α = 09°			δ = 00°									
1		.181	.200	.157	.209	.133	.167	-.149										.013		1
2	-.108	-.181	-.203	-.197	-.114	-.109	-.129				.254	.287	.304	.301	.301	.290	.289			2
3	-.068	-.133	-.182	-.201	-.126	-.132	-.170				.173		.196	.185	.231	.229	.050			3
4	-.073	-.099	-.158	-.192	-.137	-.140	-.142				.159	.157	.163	.147	.207	.057	.045			4
5	-.089	-.106	-.109	.152	-.168	-.192					.157	.145	.117	.017	.170	.015				5
6	-.082	-.077	-.109	-.218	-.167	-.171					.154	.155	.156	.015	.011	.013				6
7	-.085	-.088	-.183	-.210	-.143						.117	.148	.006	.012	-.018					7
8		-.164	-.183								.143	.001	.002							8
9	-.162	-.170	-.185								.021	.006	.002							9
10	-.125	.160									.038	.001								10
11	-.150										.001									11
								α = 12°			δ = -30°									
1	.304	.136	.138	.100	.138	-.071	-.054	.085										-.218		1
2	-.172	-.243	-.264	-.273	.947	.372	.381				.331	.367	.374	.376	-.159	-.188	-.172			2
3	-.092	-.183	-.230	-.283	.607	.221	.052				.239		.268	.662	-.030	-.196	-.214			3
4	-.098	-.121	-.207	-.295	-.001	.104	.009				.223	.228	.232	-.153	-.063	-.199	-.228			4
5	-.112	-.128	-.153	.151	-.181	-.064					.226	.208	.252	-.169	-.190	-.145				5
6	-.108	-.099	-.085	-.284	-.189	-.082					.215	.223	.225	-.112	-.201	-.165				6
7	-.107	-.117	-.184	-.268	-.156						.174	.228	.015	-.080	-.238					7
8		-.172	-.219								.202	.030	-.023							8
9	-.174	-.129	-.229								.059	.070	-.037							9
10	-.134	.156									.060	.045								10
11	-.157										.078									11
								α = 12°			δ = -20°									
1	.301	.131	.135	.098	.290	.223	.199	-.176										-.049		1
2	-.175	-.248	-.266	-.264	.401	.003	-.001				.327	.364	.373	.374	.221	.046	.103			2
3	-.096	-.187	-.231	-.253	.034	-.080	-.183				.235		.266	.353	.144	.077	-.023			3
4	-.103	-.125	-.206	-.268	-.241	-.140	-.204				.219	.223	.229	.010	.068	.016	-.042			4
5	-.117	-.132	-.145	.163	-.231	-.228					.225	.205	.238	-.062	-.033	-.005				5
6	-.112	-.101	-.121	-.247	-.253	-.229					.211	.220	.208	-.055	-.116	-.036				6
7	-.111	-.120	-.201	-.228	-.233						.171	.215	.023	-.051	-.121					7
8		-.174	-.211								.199	.027	-.005							8
9	-.181	-.157	-.223								.064	.055	-.013							9
10	-.143	.167									.056	.039								10
11	-.163										.059									11

Table 26 Continued

Pressure Coefficients on Delta Wing with Control

Configuration E M = 2.01 R = 4.2×10^6

Orif	Upper Surface at Station 1	2	3	4	5	6	7	8	9	Lower Surface at Station 1	2	3	4	5	6	7	8	9	Orif
	$\alpha = 12^\circ$									$\delta = -10^\circ$									
1	.303	.132	.138	.099	.287	.157	.167	-.253									.055		1
2	-.164	-.237	-.259	-.261	-.081	-.189	-.222			.329	.366	.373	.374	.320	.278	.276			2
3	-.088	-.176	-.228	-.228	-.247	-.220	-.257			.237		.267	.244	.247	.236	.076			3
4	-.094	-.116	-.198	-.258	-.243	-.229	-.251			.221	.226	.230	.098	.199	.088	.055			4
5	-.107	-.124	-.139	.178	-.235	-.262				.226	.207	.214	.003	.114	.067				5
6	-.103	-.091	-.139	-.243	-.259	-.255				.214	.221	.207	-.012	-.005	.030				6
7	-.103	-.111	-.204	-.221	-.239					.174	.218	.027	-.013	-.022					7
8		-.163	-.208							.200	.031	.013							8
9	-.170	-.166	-.216							.073	.059	.009							9
10	-.135	.184								.064	.052								10
11	-.152									.059									11
	$\alpha = 12^\circ$									$\delta = 00^\circ$									
1	.301	.142	.142	.101	.149	.067	.106	-.207									.076		1
2	-.143	-.204	-.228	-.231	-.182	-.171	-.202			.323	.355	.367	.366	.370	.361	.360			2
3	-.081	-.158	-.212	-.226	-.184	-.194	-.221			.230		.261	.249	.300	.308	.117			3
4	-.086	-.111	-.189	-.236	-.181	-.197	-.199			.217	.215	.226	.211	.275	.115	.106			4
5	-.102	-.120	-.124	.183	-.200	-.233				.221	.203	.174	.066	.234	.078				5
6	-.098	-.087	-.158	-.246	-.205	-.214				.211	.217	.213	.064	.065	.067				6
7	-.098	-.107	-.210	-.223	-.182					.173	.205	.053	.062	.035					7
8		-.168	-.206							.199	.035	.046							8
9	-.168	-.176	-.213							.073	.053	.048							9
10	-.131	.192								.064	.048								10
11	-.149									.052									11
	$\alpha = 12^\circ$									$\delta = 10^\circ$									
1	.298	.131	.131	.095	.232	-.024	-.032	-.221									.261		1
2	-.169	-.228	-.250	-.248	-.214	-.198	-.225			.324	.361	.369	.370	.618	.558	.516			2
3	-.095	-.177	-.229	-.255	-.217	-.223	-.234			.232		.261	.347	.572	.510	.277			3
4	-.101	-.122	-.196	-.240	-.215	-.225	-.216			.217	.220	.225	.328	.390	.248	.269			4
5	-.116	-.131	-.145	.159	-.220	-.246				.222	.203	.172	.094	.387	.215				5
6	-.111	-.098	-.186	-.255	-.228	-.229				.210	.218	.245	.026	.237	.215				6
7	-.112	-.089	-.224	-.236	-.203					.172	.203	.098	-.020	.174					7
8		-.178	-.213							.195	.034	.107							8
9	-.179	-.185	-.201							.063	.047	.102							9
10	-.141	.166								.053	.057								10
11	-.147									.048									11
	$\alpha = 12^\circ$									$\delta = 20^\circ$									
1	.301	.133	.135	.098	.208	-.122	-.139	-.227									.538		1
2	-.171	-.238	-.259	-.251	-.237	-.217	-.230			.327	.364	.371	.373	.789	.818	.682			2
3	-.093	-.183	-.230	-.127	-.237	-.243	-.240			.235		.264	.254	.729	.785	.545			3
4	-.099	-.123	-.124	-.207	-.239	-.241	-.228			.219	.224	.228	.345	.711	.447	.525			4
5	-.113	-.131	-.138	.146	-.238	-.250				.225	.205	.175	-.013	.604	.470				5
6	-.109	-.076	-.151	-.255	-.239	-.239				.212	.220	.313	-.044	.488	.450				6
7	-.110	-.066	-.232	-.243	-.223					.176	.204	.176	-.052	.375					7
8		-.171	-.208							.196	.037	.168							8
9	-.163	-.193	-.192							.052	.070	.136							9
10	-.106	.152								.053	.113								10
11	-.114									.052									11
	$\alpha = 12^\circ$									$\delta = 25^\circ$									
1	.298	.131	.133	.095	.159	-.170	-.183	-.234									.694		1
2	-.175	-.245	-.265	-.253	-.247	-.226	-.236			.324	.361	.370	.370	.918	.952	.766			2
3	-.096	-.188	-.233	.276	-.248	-.254	-.244			.232		.262	.217	.870	.953	.720			3
4	-.103	-.127	-.092	-.230	-.250	-.250	-.234			.216	.221	.226	.333	.868	.569	.688			4
5	-.116	-.135	-.123	.142	-.250	-.254				.221	.202	.172	-.034	.755	.639				5
6	-.112	-.021	-.172	-.246	-.250	-.246				.210	.217	.360	-.066	.640	.589				6
7	-.113	-.072	-.246	-.248	-.236					.174	.201	.210	-.057	.509					7
8		-.174	-.196							.193	.036	.167							8
9	-.142	-.201	-.192							.050	.111	.134							9
10	-.082	.148								.051	.147								10
11	-.102									.048									11

Table 26 Concluded

Pressure Coefficients on Delta Wing with Control

Configuration E M = 2.01 R = 4.2×10^6

Orif	Upper Surface at Station										Lower Surface at Station									Orif
	1	2	3	4	5	6	7	8	9		1	2	3	4	5	6	7	8	9	
	$\alpha = 15^\circ$										$\delta = 00^\circ$									
1	.277	.080	.039	.017	.058	-.038	-.041	-.201										.203		1
2	-.208	-.264	-.282	-.283	-.165	-.157	-.189				.395	.446	.445	.438	.496	.462	.447			2
3	-.117	-.239	-.263	-.282	-.178	-.200	-.219				.310		.344	.337	.428	.420	.214			3
4	-.125	-.153	-.231	-.286	-.215	-.213	-.201				.295	.304	.301	.313	.387	.199	.203			4
5	-.139	-.154	-.186	.264	-.241	-.243					.294	.277	.246	.136	.342	.175				5
6	-.134	-.121	-.201	-.283	-.247	-.228					.286	.298	.290	.140	.150	.154				6
7	-.132	-.144	-.241	-.238	-.212						.230	.276	.115	.129	.118					7
8		-.201	-.240								.272	.033	.106							8
9	-.196	-.200	-.237								.125	.102	.108							9
10	-.163	.272									.115	.101								10
11	-.171										.100									11

[redacted]

Table 27

Pressure Coefficients on Delta Wing with Control

Configuration F M = 2.01 R = 4.2×10^6

Orif	Upper Surface at Station 1	2	3	4	5	6	7	8	9		Lower Surface at Station 1	2	3	4	5	6	7	8	9	Orif
								α = 00°			δ = 00°									
1	.385	.347	.341	.342	.415															1
2	.082	.062	.070	.070	.083	.090					.081	.069	.063	.062	.055	.037				2
3	.049	.028	.023	.027	.043	.046					.043		.022	.015	.023					3
4	.045	.027	.010	-.002	.023	.032					.030	.020	.010	-.010	.006					4
5	.034	.020	-.015	.148	.013	-.102					.019	.010	-.019	-.101	-.010					5
6	.033	.045	.023	-.095							.028	.017	.020	-.101	-.103					6
7	.027	.023	-.092	-.094	-.097						.012	.019	-.094	-.095						7
8		-.088	-.090								.025	-.089	-.096							8
9	-.077	-.088	-.096								-.083	-.084	-.092							9
10	-.045	.153									-.044	-.088								10
11	-.073										-.084									11
								α = 00°			δ = 10°									
1				.346	.389													-.042		1
2				.073	.056	-.062		-.159					.066	.064	.227	.272	.243			2
3			.026	-.024	.009	-.045	-.166						.023	.080	.150	.159	-.037			3
4			.013	-.078	-.020	-.045	-.163						.012	.021	.105	.120	-.034			4
5			.013	.152	-.040	-.148							-.023	-.083	.066	-.055				5
6			.010	-.130									.050	-.112	-.048					6
7			-.115	-.13?	-.119								-.066	-.110						7
8			-.118										-.062							8
9			-.122										-.060							9
								α = 00°			δ = 20°									
1	.386	.353	.346	.343	.335			-.185										.144		1
2	.087	.068	.073	.072	-.074	-.128					.080	.067	.059	.058	.569	.485	.467			2
3	.053	.034	.023	.349	-.027	-.113	-.196				.044		.019	.050	.310	.386	.121			3
4	.049	.031	.011	-.179	-.066	-.131	-.193				.035	.021	.008	-.060	.345	.314	.119			4
5	.038	.024	.018	.149	-.112	-.193					.020	.008	-.028	-.154	.148	.055				5
6	.035	.048	.021	-.187							.031	.017	.062	-.163	.039					6
7	.031	.028	-.133	-.187	-.146						.017	.019	-.030	-.148						7
8		-.059	-.155								.021	-.095	-.034							8
9	-.077	-.069	-.163								-.087	-.090	-.038							9
10	-.045	.155									-.041	-.070								10
11	-.066										-.086									11
								α = 00°			δ = 30°									
1	.388	.356	.347	.344	.206			-.192										.424		1
2	.089	.072	.076	.077	-.146						.083	.070	.063	.062	.912	.773	.732			2
3	.056	.036	.028	.248	-.096		-.207				.047		.022	-.001	.641	.737	.367			3
4	.051	.035	.016	-.223	-.119		-.203				.039	.024	.013	-.162	.658	.584	.374			4
5	.042	.028	.106	.154	-.157						.023	.010	-.024	-.191	.302	.290				5
6	.038	.049	.092	-.259							.034	.017	.121	-.176	.241					6
7	.033	.071	-.116	-.254	-.170						.022	.019	.017	-.178						7
8		-.015	-.161								.025	-.089	-.002							8
9	-.074	-.039	-.183								-.085	-.065	-.016							9
10	-.038	.159									-.037	-.022								10
11	-.040										-.081									11
								α = 03°			δ = 00°									
1	.387	.307	.324	.306	.357			-.200										.063		1
2	.037	-.009	-.040	-.051	-.080	-.115					.150	.168	.162	.164	.297	.242	.251			2
3	.022	-.005	-.029	-.037	-.063	-.114	-.203				.096		.089	.083	.217	.189	.038			3
4	.019	-.005	-.032	-.062	-.067	-.107	-.200				.087	.074	.064	.049	.184	.148	.024			4
5	.005	-.013	-.021	.151	-.084	-.185					.073	.062	.027	-.062	.113	.024				5
6	.007	.013	-.019	-.133							.081	.071	.069	-.059	-.014					6
7	.002	-.005	-.120	-.131	-.157						.060	.067	-.056	-.056						7
8		-.106	-.117								.077	-.058	-.056							8
9	-.092	-.108	-.124								-.044	-.052	-.052							9
10	-.058	.157									-.012	-.055								10
11	-.086										-.044									11

[redacted]

Table 27 Continued

Pressure Coefficients on Delta Wing with Control

Configuration F M = 2.01 R = 4.2×10^6

Orif	Upper Surface at Station 1	2	3	4	5	6	7	8	9		Lower Surface at Station 1	2	3	4	5	6	7	8	9	Orif
								$\alpha = 06^\circ$			$\delta = -30^\circ$									
1	.375	.266	.275	.245	.336			.219										-.182		1
2	-.023	-.111	-.138	-.167	.905	.525					.208	.232	.241	.244	-.115	-.157	-.156			2
3	-.012	-.049	-.109	-.137	.629	.444	.150				.144		.142	.386	-.029	-.163	-.191			3
4	-.016	-.045	-.071	-.225	.450	.318	.109				.128	.121	.116	-.109	-.077	-.174	-.201			4
5	-.034	-.056	-.076	.160	.070	.076					.126	.107	.078	-.248	-.127	-.168				5
6	-.029	-.025	.031	-.235							.123	.116	.166	-.246	-.193					6
7	-.031	-.042	-.078	-.235	-.028						.093	.119	-.051	-.228						7
8		-.132	-.095								.117	.033	-.098							8
9	-.124	-.106	-.110								-.014	.020	-.106							9
10	-.073	.167									.013	-.007								10
11	-.111										-.002									11
								$\alpha = 06^\circ$			$\delta = -20^\circ$									
1	.374	.266	.275	.245	.419			-.003										-.144		1
2	-.025	-.110	-.138	-.167	.629	.292					.208	.233	.239	.241	-.021	-.090	-.094			2
3	-.012	-.048	-.113	-.110	.265	.189	-.028				.143		.142	.357	.035	-.091	-.145			3
4	-.017	-.044	-.074	-.203	.064	.110	-.062				.128	.123	.114	-.109	-.019	-.103	-.157			4
5	-.033	-.055	-.079	.160	-.080	-.080					.125	.109	.081	-.176	-.073	-.111				5
6	-.029	-.023	.002	-.206							.123	.117	.112	-.154	-.157					6
7	-.032	-.041	-.113	-.189	-.139						.094	.113	-.060	-.144						7
8		-.131	-.116								.120	-.002	-.078							8
9	-.122	-.116	-.131								-.013	-.002	-.088							9
10	-.076	.168									.013	-.023								10
11	-.111										-.007									11
								$\alpha = 06^\circ$			$\delta = -10^\circ$									
1	.371	.261	.271	.240	.467			-.152										-.068		1
2	-.027	-.112	-.139	-.166	.204	.078					.203	.227	.232	.237	.171	.039	.019			2
3	-.016	-.051	-.112	-.164	-.007	-.025	-.155				.139		.136	.126	.122	.064	-.062			3
4	-.019	-.047	-.075	-.178	-.147	-.053	-.166				.123	.116	.112	-.007	.077	.045	-.071			4
5	-.038	-.057	-.075	.156	-.128	-.185					.122	.102	.099	-.101	.027	-.045				5
6	-.032	-.027	-.031	-.180							.117	.111	.097	-.096	-.089					6
7	-.035	-.043	-.137	-.178	-.180						.091	.107	-.051	-.098						7
8		-.131	-.138								.114	-.017	-.062							8
9	-.123	-.121	-.148								-.016	-.020	-.066							9
10	-.083	.162									.009	-.031								10
11	-.114										-.013									11
								$\alpha = 06^\circ$			$\delta = 00^\circ$									
1	.378	.268	.278	.249	.328			-.211										.020		1
2	-.020	-.102	-.129	-.156	-.098	-.131					.208	.233	.241	.246	.282	.244	.247			2
3	-.010	-.044	-.103	-.138	-.085	-.128	-.217				.144		.144	.142	.205	.188	.006			3
4	-.013	-.041	-.066	-.110	-.091	-.125	-.212				.128	.123	.119	.104	.167	.145	-.001			4
5	-.032	-.051	-.060	.164	-.097	-.193					.126	.109	.076	-.020	.135	-.002				5
6	-.026	-.019	-.053	-.164							.123	.116	.116	-.019	-.011					6
7	-.030	-.038	-.145	-.164	-.158						.101	.113	-.021	-.016						7
8		-.128	-.144								.119	-.023	-.023							8
9	-.118	-.131	-.150								-.012	-.015	-.020							9
10	-.078	.167									.014	-.020								10
11	-.109										-.010									11
								$\alpha = 06^\circ$			$\delta = 10^\circ$									
1	.375	.266	.276	.247	.341			-.213										.127		1
2	-.021	-.106	-.130	-.155	-.143	-.166					.207	.230	.239	.242	.381	.470	.425			2
3	-.012	-.046	-.101	-.231	-.120	-.162	-.220				.142		.143	.189	.351	.371	.109			3
4	-.016	-.041	-.063	-.113	-.116	-.163	-.216				.125	.121	.119	.158	.364	.298	.109			4
5	-.033	-.053	-.042	.164	-.124	-.208					.124	.108	.076	.009	.254	.083				5
6	-.027	-.021	-.071	-.148							.120	.114	.127	-.008	.085					6
7	-.031	-.028	-.171	-.152	-.164						.104	.111	.019	-.069						7
8		-.113	-.179								.112	-.024	.027							8
9	-.119	-.127	-.178								-.017	-.023	.027							9
10	-.078	.167									.015	-.020								10
11	-.105										-.013									11

Table 27 Continued

Pressure Coefficients on Delta Wing with Control

Configuration F M = 2.01 R = 4.2 x 10^6

Orif	Upper Surface at Station 1	2	3	4	5	6	7	8	9		Lower Surface at Station 1	2	3	4	5	6	7	8	9	Orif
								α = 06°			δ = 20°									
1	.375	.265	.272	.245	.275			-.225			.206	.227	.235	.239	.682	.691	.660	.354		1
2	-.023	-.109	-.134	-.160	-.191	-.205					.141		.137	.051	.593	.664	.303			2
3	-.013	-.048	-.106	.562	-.172	-.199	-.236				.125	.120	.113	.168	.792	.548	.313			3
4	-.017	-.045	-.070	-.249	-.157	-.209	-.232				.124	.105	.071	-.013	.434	.261				4
5	-.034	-.055	.066	.159	-.170	-.235					.121	.112	.124	-.075	.243					5
6	-.028	-.024	-.070	-.248							.103	.107	.069	-.105						6
7	-.032	.016	-.195	-.231	-.193						.110	-.028	.071							7
8		-.088	-.187								-.019	-.027	.060							8
9	-.121	-.114	-.204								.014	-.005								9
10	-.073	.166									-.016									10
11	-.081																			11
								α = 06°			δ = 30°									
1	.371	.263	.271	.242	.148			-.243			.203	.227	.233	.236	.960	.955	.838	.616		1
2	-.026	-.111	-.141	-.167	-.226	-.234					.139		.135	.050	.857	.936	.577			2
3	-.016	-.051	-.112	.159	-.208	-.231	-.256				.123	.118	.111	.162	.694	.771	.605			3
4	-.019	-.047	-.072	-.243	-.201	-.241	-.253				.124	.102	.067	-.058	.686	.537				4
5	-.037	-.059	.117	.158	-.207	-.258					.117	.109	.202	-.130	.494					5
6	-.032	-.023	-.040	-.228							.101	.104	.119	-.149						6
7	-.035	.069	-.193	-.198	-.224						.106	-.031	.101							7
8		-.079	-.221								-.026	.003	.091							8
9	-.102	-.111	-.232								.014	.064								9
10	-.010	.164									-.015									10
11	-.023																			11
								α = 09°			δ = 00°									
1	.353	.223	.226	.187	.288			-.188			.271	.303	.316	.320	.301	.274	.263	-.023		1
2	-.080	-.160	-.198	-.217	-.079	-.097					.193		.211	.205	.219	.214	-.015			2
3	-.040	-.099	-.170	-.222	-.084	-.108	-.195				.178	.182	.177	.166	.181	.173	-.011			3
4	-.039	-.073	-.143	-.207	-.103	-.121	-.190				.177	.163	.132	.020	.166	-.024				4
5	-.061	-.078	-.096	.177	-.116	-.194					.171	.171	.170	.026	.006					5
6	-.053	-.046	-.091	-.219							.148	.165	.019	.025						6
7	-.057	-.063	-.167	-.217	-.152						.167	.018	.020							7
8		-.139	-.173								.028	.023	.020							8
9	-.132	-.148	-.177								.062	.019								9
10	-.092	.184									.030									10
11	-.123																			11
								α = 12°			δ = -30°									
1	.324	.171	.160	.124	.351			.114			.350	.381	.389	.393	-.096	-.132	-.117	-.167		1
2	-.145	-.225	-.257	-.270	.958	.434					.255		.283	.556	.026	-.157	-.169			2
3	-.070	-.163	-.222	-.283	.771	.311	.054				.236	.249	.248	-.005	-.052	-.119	-.184			3
4	-.066	-.100	-.201	-.298	.594	.142	.003				.239	.224	.196	-.218	-.119	-.138				4
5	-.088	-.107	-.143	.219	-.210	-.085					.229	.237	.287	-.203	-.205					5
6	-.084	-.076	-.064	-.290							.196	.234	.049	-.157						6
7	-.084	-.095	-.147	-.274	-.216						.224	.125	.006							7
8		-.155	-.198								.073	.105	-.019							8
9	-.159	-.123	-.214								.087	.076								9
10	-.109	.229									.096									10
11	-.134																			11
								α = 12°			δ = -20°									
1	.324	.170	.162	.123	.458			-.113			.349	.380	.388	.394	.134	.015	.027	-.087		1
2	-.144	-.224	-.257	-.269	.658	.185					.254		.284	.437	.145	-.022	-.073			2
3	-.069	-.160	-.222	-.289	.309	.052	-.121				.235	.250	.247	.004	.066	.099	-.091			3
4	-.065	-.099	-.203	-.294	-.034	-.045	-.148				.240	.225	.222	-.105	-.028	-.051				4
5	-.088	-.106	-.139	.219	-.239	-.196					.230	.237	.238	-.082	-.137					5
6	-.082	-.075	-.087	-.267							.196	.232	.046	-.070						6
7	-.084	-.094	-.165	-.230	-.240						.224	.093	.020							7
8		-.152	-.202								.073	.084	.004							8
9	-.153	-.131	-.218								.088	.064								9
10	-.110	.228									.085									10
11	-.135																			11

Table 27 Continued

Pressure Coefficients on Delta Wing with Control

Configuration F M = 2.01 R = 4.2×10^6

Orif	Upper Surface at Station 1	2	3	4	5	6	7	8	9	Lower Surface at Station 1	2	3	4	5	6	7	8	9	Orif
								$\alpha = 12^\circ$		$\delta = -10^\circ$									
1	.324	.181	.162	.124	.525			-.214									.042		1
2	-.142	-.221	-.257	-.267	.270	-.018				.351	.380	.388	.393	.316	.224	.228			2
3	-.068	-.160	-.221	-.282	-.055	-.107	-.207			.257		.282	.357	.266	.208	.040			3
4	-.062	-.095	-.202	-.273	-.248	-.151	-.212			.238	.251	.248	.106	.205	.163	.028			4
5	-.085	-.102	-.132	.220	-.234	-.236				.241	.226	.240	-.031	.105	.045				5
6	-.080	-.071	-.121	-.238						.232	.239	.237	-.016	-.040					6
7	-.081	-.089	-.198	-.210	-.240					.197	.234	.049	-.021						7
8		-.145	-.189							.224	.078	.028							8
9	-.151	-.143	-.210							.073	.080	.022							9
10	-.112	.228								.088	.067								10
11	-.133									.084									11
								$\alpha = 12^\circ$		$\delta = 00^\circ$									
1	.320	.174	.157	.121	.195			-.217									.107		1
2	-.144	-.226	-.259	-.270	-.182	-.185				.346	.376	.385	.388	.423	.391	.388			2
3	-.071	-.164	-.225	-.272	-.167	-.183	-.225			.253		.280	.278	.342	.334	.095			3
4	-.067	-.103	-.205	-.259	-.175	-.193	-.220			.234	.247	.242	.237	.304	.286	.103			4
5	-.089	-.110	-.145	.216	-.184	-.234				.238	.222	.190	.071	.279	.086				5
6	-.084	-.078	-.152	-.264						.227	.233	.232	.080	.091					6
7	-.087	-.096	-.204	-.216	-.185					.195	.222	.070	.078						7
8		-.159	-.211							.217	.059	.069							8
9	-.157	-.168	-.209							.070	.067	.069							9
10	-.116	.223								.087	.062								10
11	-.138									.074									11
								$\alpha = 12^\circ$		$\delta = 10^\circ$									
1	.321	.169	.160	.124	.262			-.234									.279		1
2	-.144	-.223	-.257	-.248	-.206	-.215				.347	.378	.386	.390	.631	.611	.571			2
3	-.070	-.162	-.221	-.284	-.193	-.212	-.240			.254		.280	.306	.566	.553	.249			3
4	-.065	-.099	-.189	-.274	-.206	-.224	-.236			.234	.249	.244	.346	.494	.479	.257			4
5	-.089	-.106	-.139	.218	-.212	-.251				.239	.224	.191	.150	.439	.218				5
6	-.083	-.073	-.129	-.248						.229	.236	.241	.106	.245					6
7	-.084	-.053	-.224	-.234	-.207					.203	.225	.113	.035						7
8		-.149	-.205							.216	.063	.131							8
9	-.153	-.163	-.197							.069	.063	.128							9
10	-.109	.225								.087	.067								10
11	-.114									.075									11
								$\alpha = 12^\circ$		$\delta = 20^\circ$									
1	.321	.167	.159	.123	.202			-.239									.501		1
2	-.143	-.226	-.259	-.251	-.228	-.231				.346	.377	.382	.390	.736	.872	.761			2
3	-.070	-.162	-.225	.423	-.213	-.230	-.247			.254		.280	.149	.725	.827	.462			3
4	-.067	-.101	-.102	-.280	-.227	-.240	-.242			.234	.248	.244	.403	.764	.705	.494			4
5	-.089	-.107	-.099	.217	-.235	-.257				.240	.222	.189	.128	.615	.428				5
6	-.084	-.049	-.135	-.256						.229	.233	.246	.019	.522					6
7	-.084	-.028	-.243	-.241	-.224					.198	.223	.177	-.051						7
8		-.131	-.227							.215	.062	.182							8
9	-.135	-.166	-.174							.065	.060	.164							9
10	-.054	.226								.087	.094								10
11	-.074									.074									11
								$\alpha = 12^\circ$		$\delta = 30^\circ$									
1	.317	.164	.152	.114	.067			-.241									.787		1
2	-.150	-.232	-.266	-.242	-.248	-.239				.340	.371	.377	.383	1.061	1.146	.921			2
3	-.077	-.170	-.228	.208	-.231	-.239	-.251			.249		.273	.141	1.003	1.141	.851			3
4	-.075	-.107	-.061	-.299	-.246	-.250	-.243			.228	.240	.236	.437	.979	.873	.838			4
5	-.095	-.114	-.012	.209	-.253	-.261				.232	.214	.181	.109	.889	.819				5
6	-.090	.056	-.144	-.191						.223	.225	.356	-.051	.835					6
7	-.090	-.016	-.245	-.200	-.243					.195	.215	.237	-.077						7
8		-.135	-.228							.207	.056	.217							8
9	-.028	-.162	-.210							.056	.114	.207							9
10	.008	.219								.083	.171								10
11	-.051									.064									11

Table 27 Concluded

Pressure Coefficients on Delta Wing with Control

Configuration F M = 2.01 R = 4.2×10^6

Orif	Upper Surface at Station										Lower Surface at Station									Orif
	1	2	3	4	5	6	7	8	9		1	2	3	4	5	6	7	8	9	
	$\alpha = 15^\circ$										$\delta = 00^\circ$									
1	.294	.117	.066	.043	.188			-.053										.052		1
2	-.190	-.257	-.284	-.288	.141	.036					.393	.451	.451	.444	.383	.358	.346			2
3	-.094	-.235	-.263	-.294	.146	.005	-.102				.315		.348	.343	.343	.320	.054			3
4	-.091	-.131	-.228	-.285	.023	-.081	-.114				.300	.312	.307	.307	.301	.287	.068			4
5	-.118	-.137	-.180	.257	-.228	-.178					.304	.285	.254	.123	.259	.066				5
6	-.110	-.102	-.181	-.265							.288	.300	.297	.130	.085					6
7	-.112	-.124	-.227	-.253	-.230						.240	.282	.117	.127						7
8		-.179	-.228								.280	.106	.111							8
9	-.176	-.183	-.234								.118	.113	.113							9
10	-.138	.274									.127	.107								10
11	-.152										.121									11

Table 28

Pressure Coefficients on Delta Wing with Control

Configuration G M = 2.01 R = 4.2×10^6

Orif	Upper Surface at Station 1	2	3	4	5	6	7	8	9		Lower Surface at Station 1	2	3	4	5	6	7	8	9	Orif
							$\alpha = 00^\circ$				$\delta = 00^\circ$									
1	.369	.333	.330	.329	.233	.319	.217													1
2	.063	.047	.055	.052	.090	.058	.052				.064	.058	.050	.050	.039	.029	.024			2
3	.029	.015	.013	.003	.031	.023	-.118				.029		.003	.003	.020	.006	-.121			3
4	.024	.014	-.006	-.025	.021	.097	-.120				.017	.008	-.003	-.019	.005	-.013	-.136			4
5	.013	.006	-.025	.107	-.011	-.127					.004	-.003	-.037	-.116	-.016	-.133				5
6	.013	.030	.006	-.114	-.106						.013	.004	.007	-.115	-.121					6
7	.010	.008	-.106	-.117	-.097						-.003	.006	-.106	-.111	-.122					7
8		-.101	-.110								.004	-.101	-.109							8
9	-.093	-.102	-.116								-.096	-.097	-.107							9
10	-.063	.114									-.063	-.101								10
11	-.088										-.101									11
							$\alpha = 00^\circ$				$\delta = 10^\circ$									
1	.370	.334		.330	-.007	.261	.216											-.027		1
2	.064	.050		.057	-.013	-.108	-.135				.064			.052	.191	.249	.262			2
3	.031	.016		.034	-.016	-.098	-.178				.029			.051	.178	.173	-.030			3
4	.025	.014		-.082	-.025	.089	-.180				.019			.017	.127	.120	-.047			4
5	.015	.009		.118	-.065	-.162					.005			-.110	.034	-.073				5
6	.014	.031		-.149	-.137						.013			-.134	-.075					6
7	.012	.011		-.154	-.125						.000			-.125	-.082					7
8		-.092									.015									8
9	-.092	-.096									-.097									9
10	-.065	.123									-.060									10
11	-.086										-.102									11
							$\alpha = 00^\circ$				$\delta = 20^\circ$									
1	.370	.335	.331	.330	-.093	.093	.170											.152		1
2	.063	.050	.059	.059	-.110	-.169	-.192				.063	.057	.050	.049	.505	.469	.483			2
3	.030	.016	.016	.439	-.052	-.160	-.209				.027		.004	-.012	.316	.417	.090			3
4	.027	.015	-.002	-.209	-.080	.120	-.209				.020	.009	-.002	-.010	.388	.304	.092			4
5	.016	.008	-.017	.162	-.115	-.205					.003	-.004	-.040	-.185	.178	.034				5
6	.013	.032	.048	-.207	-.166						.012	.002	.006	-.177	-.008					6
7	.012	.012	-.123	-.211	-.151						.003	.006	-.042	-.200	.001					7
8		-.069	-.158								.005	-.103	-.028							8
9	-.095	-.068	-.178								-.102	-.103	-.034							9
10	-.067	.171									-.054	-.099								10
11	-.082										-.105									11
							$\alpha = 00^\circ$				$\delta = 30^\circ$									
1	.369	.335	.331	.331	-.164	-.041	.118											.428		1
2	.064	.051	.059	.058	-.184	-.215	-.230				.063	.057	.050	.048	.840	.771	.749			2
3	.031	.016	.016	-.006	-.126	-.207	-.230				.027		.003	-.017	.649	.789	.297			3
4	.027	.014	-.002	-.263	-.143	.147	-.230				.021	.008	-.002	-.086	.581	.613	.350			4
5	.015	.008	-.020	.188	-.154	-.238					.003	-.005	-.040	-.239	.552	.242				5
6	.014	.031	.130	-.266	-.198						.012	.001	-.001	-.213	.129					6
7	.013	.045	-.078	-.275	-.181						.003	.004	.008	-.211	.192					7
8		-.013	-.152								.000	-.104	.006							8
9	-.096	-.031	-.185								-.103	-.104	-.011							9
10	-.063	.198									-.049	-.060								10
11	-.054										-.106									11
							$\alpha = 03^\circ$				$\delta = 00^\circ$									
1	.382	.271	.316	.299	.039	.295	.252											-.033		1
2	.021	-.023	-.045	-.053	-.040	-.084	-.100				.137	.158	.155	.165	.193	.199	.183			2
3	.008	-.022	-.033	-.034	-.062	-.088	-.185				.085		.084	.080	.190	.143	-.015			3
4	.008	-.021	-.035	-.060	-.053	.138	-.171				.074	.066	.062	.048	.146	.135	-.045			4
5	-.009	-.023	-.046	.163	-.095	-.168					.067	.056	.028	-.060	.091	-.025				5
6	-.005	-.002	-.017	-.128	-.193						.066	.062	.063	-.057	-.036					6
7	-.010	-.014	-.119	-.128	-.076						.051	.060	-.057	-.055	-.027					7
8		-.113	-.115								.058	-.058	-.058							8
9	-.106	-.113	-.122								-.052	-.055	-.053							9
10	-.070	.160									-.021	-.058								10
11	-.098										-.062									11

[redacted]

Table 28 Continued

Pressure Coefficients on Delta Wing with Control

Configuration G M = 2.01 R = 4.2×10^6

Orif	Upper Surface at Station 1	2	3	4	5	6	7	8	9	Lower Surface at Station 1	2	3	4	5	6	7	8	9	Orif
								α = 06°					δ = -30°						
1	.373	.229	.271	.240	.624	-.031	.013										-.163		1
2	-.032	-.114	-.132	-.157	.883	.567	.570			.199	.225	.235	.242	-.012	-.099	-.123			2
3	-.020	-.052	-.104	-.134	.668	.417	.126			.136		.140	.045	.023	-.117	-.133			3
4	-.024	-.051	-.068	-.202	.407	.186	.138			.120	.117	.116	-.143	-.026	-.088	-.171			4
5	-.041	-.060	-.072	.157	-.034	.027				.118	.102	.075	-.199	-.081	-.133				5
6	-.038	-.030	.006	-.213	-.155					.113	.110	.229	-.214	-.165					6
7	-.040	-.047	-.070	-.209	-.020					.084	.108	-.002	-.221	-.151					7
8		-.134	-.077							.107	.027	-.066							8
9	-.130	-.124	-.091							-.015	.040	-.097							9
10	-.083	.155								.010	.012								10
11	-.118									-.019									11
								α = 06°					δ = -20°						
1	.372	.229	.273	.242	.525	.108	.095										-.112		1
2	-.031	-.110	-.130	-.156	.503	.249	.282			.198	.225	.235	.240	.100	.003	-.029			2
3	-.020	-.048	-.103	-.127	.195	.132	-.084			.137		.139	.424	.106	-.013	-.079			3
4	-.024	-.048	-.067	-.173	.082	.146	-.089			.119	.118	.116	-.028	.062	.018	-.113			4
5	-.041	-.057	-.068	.149	-.131	-.122				.119	.103	.075	-.160	-.019	-.068				5
6	-.038	-.027	.009	-.168	-.175					.113	.109	.134	-.146	-.113					6
7	-.040	-.044	-.100	-.178	-.083					.084	.107	-.045	-.140	-.098					7
8		-.130	-.112							.105	-.007	-.066							8
9	-.125	-.120	-.116							-.013	.003	-.071							9
10	-.082	.148								.009	-.016								10
11	-.117									-.022									11
								α = 06°					δ = -10°						
1	.375	.232	.275	.243	.411	.191	.169										-.042		1
2	-.025	-.110	-.130	-.154	.191	.069	.090			.203	.227	.234	.242	.178	.126	.082			2
3	-.014	-.048	-.102	-.142	.002	-.033	-.163			.139		.140	.131	.179	.108	-.013			3
4	-.019	-.047	-.066	-.143	-.110	.134	-.167			.122	.119	.116	.008	.160	.129	-.044			4
5	-.037	-.057	-.058	.153	-.152	-.176				.121	.104	.096	-.088	.061	-.012				5
6	-.033	-.026	-.020	-.163	-.181					.116	.109	.102	-.084	-.060					6
7	-.035	-.043	-.108	-.158	-.092					.086	.108	-.038	-.090	-.044					7
8		-.130	-.130							.107	-.017	-.047							8
9	-.123	-.119	-.142							-.013	-.017	-.052							9
10	-.082	.152								.012	-.029								10
11	-.114									-.024									11
								α = 06°					δ = 00°						
1	.375	-.111			-.083	.256	.239										.048		1
2	-.023	-.048			-.129	-.169	-.179			.203			.239	.277	.296	.274			2
3	-.014	-.048			-.120	-.154	-.197			.139			.137	.279	.228	.065			3
4	-.017	-.058			-.109	.141	-.198			.123			.099	.212	.214	.023			4
5	-.036	-.026		.172	-.117	-.198				.121			-.024	.159	.041				5
6	-.032	-.042		-.162	-.167					.116			-.021	.008					6
7	-.034	-.132		-.166	-.087					.094			-.018	.026					7
8		-.132								.105									8
9	-.123	.174								-.017									9
10	-.086									.021									10
11	-.113									-.033									11
								α = 06°					δ = 10°						
1	.369	.243	.293	.264	-.088	.172	.202										.114		1
2	-.019	-.086	-.104	-.133	-.131	-.179	-.196			.205	.242	.255	.257	.290	.458	.421			2
3	-.010	-.027	-.080	-.035	-.113	-.167	-.204			.145		.158	.123	.353	.371	.089			3
4	-.012	-.025	-.045	-.105	-.095	.161	-.206			.130	.137	.136	.192	.400	.283	.074			4
5	-.029	-.034	-.020	.207	-.112	-.203				.129	.124	.093	.027	.277	.069				5
6	-.024	-.002	-.043	-.131	-.153					.125	.128	.114	.033	.062					6
7	-.027	-.011	-.131	-.141	-.070					.110	.125	.028	-.011	.059					7
8		-.087	-.154							.119	-.005	.046							8
9	-.109	-.096	-.165							-.003	-.007	.052							9
10	-.074	.206								.040	-.010								10
11	-.092									-.016									11

Table 28 Continued

Pressure Coefficients on Delta Wing with Control

Configuration G M = 2.01 R = 4.2×10^6

Orif	Upper Surface at Station 1	2	3	4	5	6	7	8	9	Lower Surface at Station 1	2	3	4	5	6	7	8	9	Orif
							$\alpha = 06^\circ$			$\delta = 20^\circ$									
1	.368	.241	.288	.257	-.131	.044	.159										.335		1
2	-.021	-.090	-.109	-.139	-.165	-.204	-.220			.203	.238	.248	.250	.548	.717	.683			2
3	-.011	-.030	-.084	.120	-.148	-.196	-.220			.144		.151	.059	.455	.656	.239			3
4	-.013	-.028	-.049	-.242	-.117	.229	-.221			.128	.133	.129	.311	.472	.555	.275			4
5	-.032	-.037	.110	.282	-.135	-.222				.128	.119	.087	-.039	.590	.216				5
6	-.026	-.005	.013	-.203	-.172					.123	.122	.096	-.013	.203					6
7	-.029	.046	-.156	-.138	-.083					.110	.122	.055	-.094	.217					7
8		-.046	-.189							.113	-.009	.101							8
9	-.113	-.073	-.185							-.012	-.011	.089							9
10	-.065	.283								.046	-.016								10
11	-.052									-.021									11
							$\alpha = 06^\circ$			$\delta = 30^\circ$									
1	.373	.231	.273	.242	-.167	-.037	.124										.619		1
2	-.027	-.112	-.128	-.152	-.195	-.217	-.229			.198	.223	.231	.238	.849	.934	.871			2
3	-.018	-.050	-.100	.008	-.177	-.210	-.224			.135		.135	.058	.630	.979	.522			3
4	-.021	-.049	-.066	-.276	-.148	.240	-.225			.118	.114	.112	.273	.639	.809	.555			4
5	-.040	-.059	.190	.284	-.166	-.231				.117	.100	.070	-.049	.983	.462				5
6	-.035	-.025	.031	-.173	-.192					.111	.103	.084	-.060	.428					6
7	-.038	.082	-.136	-.173	-.104					.098	.103	.116	-.132	.486					7
8		-.059	-.197							.097	-.030	.112							8
9	-.087	-.078	-.218							-.032	-.029	.105							9
10	.015	.288								.034	.027								10
11	.010									-.031									11
							$\alpha = 09^\circ$			$\delta = 00^\circ$									
1	.358	.196	.224	.184	-.017	.182	.202										.055		1
2	-.083	-.173	-.196	-.209	-.043	-.110	-.134			.272	.302	.314	.314	.300	.342	.322			2
3	-.043	-.110	-.164	-.213	-.058	-.110	-.158			.193		.208	.203	.272	.274	.043			3
4	-.042	-.081	-.132	-.199	-.087	.148	-.161			.178	.178	.174	.166	.268	.225	.029			4
5	-.064	-.087	-.084	.185	-.141	-.191				.178	.158	.130	.023	.206	.030				5
6	-.059	-.058	-.089	-.207	-.179					.170	.161	.168	.026	.034					6
7	-.062	-.070	-.158	-.209	-.095					.143	.159	.020	.028	.029					7
8		-.144	-.164							.157	.013	.021							8
9	-.141	-.149	-.164							.027	.016	.021							9
10	-.100	.188								.058	.012								10
11	-.130									.012									11
							$\alpha = 12^\circ$			$\delta = -30^\circ$									
1	.325	.164	.168	.131	.641	-.054	.034										-.149		1
2	-.137	-.213	-.238	-.249	.925	.476	.421			.354	.389	.396	.397	.050	-.079	-.096			2
3	-.064	-.156	-.207	-.255	.769	.298	.021			.261		.291	.163	.096	-.105	-.106			3
4	-.062	-.090	-.175	-.270	.461	.189	.003			.242	.257	.254	.207	.005	-.028	-.155			4
5	-.081	-.096	-.129	.193	-.171	-.107				.249	.234	.202	-.131	-.041	-.095				5
6	-.077	-.067	-.057	-.259	-.223					.239	.246	.349	-.195	-.160					6
7	-.076	-.083	-.134	-.246	-.113					.201	.238	.087	-.181	-.146					7
8		-.142	-.174							.228	.138	.034							8
9	-.143	-.117	-.192							.089	.134	.015							9
10	-.102	.202								.088	.102								10
11	-.125									.096									11
							$\alpha = 12^\circ$			$\delta = -20^\circ$									
1	.324	.148	.152	.119	.541	.073	.125										-.076		1
2	-.156	-.235	-.254	-.259	.620	.192	.177			.348	.376	.381	.386	.208	.056	.039			2
3	-.080	-.176	-.220	-.269	.314	.062	-.136			.252		.277	.477	.210	.040	-.019			3
4	-.078	-.112	-.188	-.284	.135	.163	-.148			.232	.241	.240	.110	.103	.149	-.070			4
5	-.099	-.117	-.140	.179	-.231	-.195				.238	.216	.191	-.111	-.015	-.017				5
6	-.095	-.088	-.077	-.250	-.233					.227	.228	.251	-.094	-.098					6
7	-.095	-.103	-.164	-.226	-.120					.188	.221	.052	-.087	-.076					7
8		-.164	-.195							.214	.093	.034							8
9	-.165	-.137	-.204							.072	.082	.015							9
10	-.124	.184								.069	.063								10
11	-.149									.072									11

Table 28 Continued

Pressure Coefficients on Delta Wing with Control

Configuration G M = 2.01 R = 4.2×10^6

Orif	Upper Surface at Station 1	2	3	4	5	6	7	8	9	Lower Surface at Station 1	2	3	4	5	6	7	8	9	Orif
								$\alpha = 12^\circ$		$\delta = -10^\circ$									
1	.328	.164	.166	.130	.362	.110	.194										.072		1
2	-.135	-.215	-.240	-.246	.324	.005	-.008			.356	.387	.393	.395	.329	.267	.221			2
3	-.063	-.157	-.206	-.243	.050	-.091	-.195			.264		.290	.310	.377	.250	.126			3
4	-.061	-.092	-.174	-.271	-.102	.167	-.199			.245	.256	.253	.095	.263	.286	.067			4
5	-.080	-.098	-.116	.192	-.222	-.222				.250	.231	.230	-.048	.109	.113				5
6	-.076	-.067	-.085	-.228	-.224					.242	.242	.238	-.040	.013					6
7	-.076	-.084	-.160	-.204	-.109					.202	.238	.067	-.042	.060					7
8		-.143	-.178							.227	.095	.050							8
9	-.141	-.128	-.195							.089	.085	.034							9
10	-.104	.201								.088	.071								10
11	-.127									.089									11
								$\alpha = 12^\circ$		$\delta = 00^\circ$									
1	.325	.149	.152	.118	-.116	.100	.191										.084		1
2	-.150	-.223	-.244	-.252	-.143	-.183	-.208			.346	.375	.380	.383	.359	.386	.379			2
3	-.077	-.170	-.218	-.257	-.138	-.175	-.200			.251		.275	.273	.321	.321	.063			3
4	-.077	-.110	-.186	-.254	-.142	.188	-.204			.231	.239	.238	.235	.287	.270	.058			4
5	-.096	-.116	-.132		-.174	-.222				.235	.214	.186	.074	.250	.056				5
6	-.092	-.086	-.155	-.243	-.202					.226	.225	.226	.077	.071					6
7	-.094	-.100	-.201	-.208	-.115					.192	.216	.067	.082	.060					7
8		-.164	-.206							.210	.056	.064							8
9	-.166	-.168	-.201							.068	.058	.066							9
10	-.130	.230								.078	.055								10
11	-.146									.059									11
								$\alpha = 12^\circ$		$\delta = 10^\circ$									
1	.324	.150	.150	.115	-.148	.000	.153										.232		1
2	-.154	-.235	-.255	-.246	-.178	-.204	-.224			.348	.375	.382	.382	.482	.601	.561			2
3	-.077	-.178	-.223	-.113	-.170	-.198	-.212			.253		.275	.149	.473	.537	.172			3
4	-.078	-.113	-.186	-.272	-.165	.216	-.214			.232	.239	.238	.372	.536	.450	.194			4
5	-.098	-.119	-.131	.257	-.195	-.232				.239	.214	.184	.166	.435	.172				5
6	-.094	-.088	-.101	-.239	-.213					.228	.225	.198	.141	.212					6
7	-.095	-.054	-.213	-.225	-.123					.200	.216	.091	.076	.170					7
8		-.156	-.222							.215	.053	.120							8
9	-.167	-.166	-.203							.059	.050	.131							9
10	-.121	.265								.087	.043								10
11	-.112									.051									11
								$\alpha = 12^\circ$		$\delta = 20^\circ$									
1	.324	.152	.150	.116	-.179	-.069	.144										.537		1
2	-.155	-.237	-.259	-.246	-.204	-.225	-.243			.348	.376	.382	.383	.674	.909	.812			2
3	-.078	-.178	-.224	.155	-.194	-.220	-.230			.252		.275	.145	.708	.903	.415			3
4	-.077	-.113	-.113	-.284	-.176	.322	-.232			.232	.240	.238	.478	.695	.750	.475			4
5	-.098	-.120	-.098	.375	-.217	-.246				.238	.215	.183	.176	.782	.406				5
6	-.094	-.072	-.118	-.253	-.224					.228	.224	.190	.105	.450					6
7	-.095	.006	-.203	-.224	-.121					.203	.216	.121	-.019	.440					7
8		-.128	-.227							.212	.054	.187							8
9	-.133	-.155	-.211							.050	.049	.185							9
10	-.033	.381								.107	.041								10
11	-.048									.043									11
								$\alpha = 12^\circ$		$\delta = 30^\circ$									
1	.327	.170	.168	.131	-.186	-.103	.149										.832		1
2	-.135	-.214	-.238	-.113	-.207	-.227	-.242			.356	.389	.395	.396	1.003	1.182	1.000			2
3	-.062	-.154	-.181	-.176	-.192	-.224	-.229			.263		.290	.159	1.005	1.214	.841			3
4	-.062	-.091	-.047	-.254	-.165	.345	-.229			.245	.257	.253	.591	.862	.968	.803			4
5	-.079	-.095	-.062	.400	-.215	-.242				.252	.232	.198	.237	1.137	.803				5
6	-.075	.103	-.071	-.234	-.216					.242	.242	.207	.038	.834					6
7	-.074	.058	-.156	-.178	-.098					.220	.234	.228	-.051	.815					7
8		-.083	-.209							.222	.075	.259							8
9	.026	-.106	-.167							.069	.071	.272							9
10	.062	.405								.129	.127								10
11	.005									.062									11

Table 28 Concluded

Pressure Coefficients on Delta Wing with Control.

Configuration G M = 2.01 R = 4.2×10^6

Orif	Upper Surface at Station 1	2	3	4	5	6	7	8	9		Lower Surface at Station 1	2	3	4	5	6	7	8	9	Orif
	$\alpha = 15^\circ$										$\delta = 00^\circ$									
1	.297	.112	.064	.049	-.075	-.004	.177				.397	.450	.451	.446	.451	.461	.453	.149		1
2	-.195	-.259	-.273	-.271	-.105	-.151	-.179				.317		.346	.336	.410	.404	.114			2
3	-.098	-.239	-.251	-.276	-.100	-.154	-.175				.304	.308	.307	.317	.375	.349	.121			3
4	-.095	-.138	-.217	-.272	-.131	.246	-.182				.306	.282	.250	.134	.332	.119				4
5	-.121	-.142	-.177	.286	-.207	-.218					.292	.296	.293	.139	.140					5
6	-.116	-.112	-.181	-.238	-.235						.241	.280	.121	.141	.123					6
7	-.116	-.128	-.221	-.210	-.091						.277	.103	.116							7
8		-.181	-.220								.123	.105	.121							8
9	-.182	-.185	-.222								.124	.104								9
10	-.149	.293									.112									10
11	-.156																			11

[redacted]

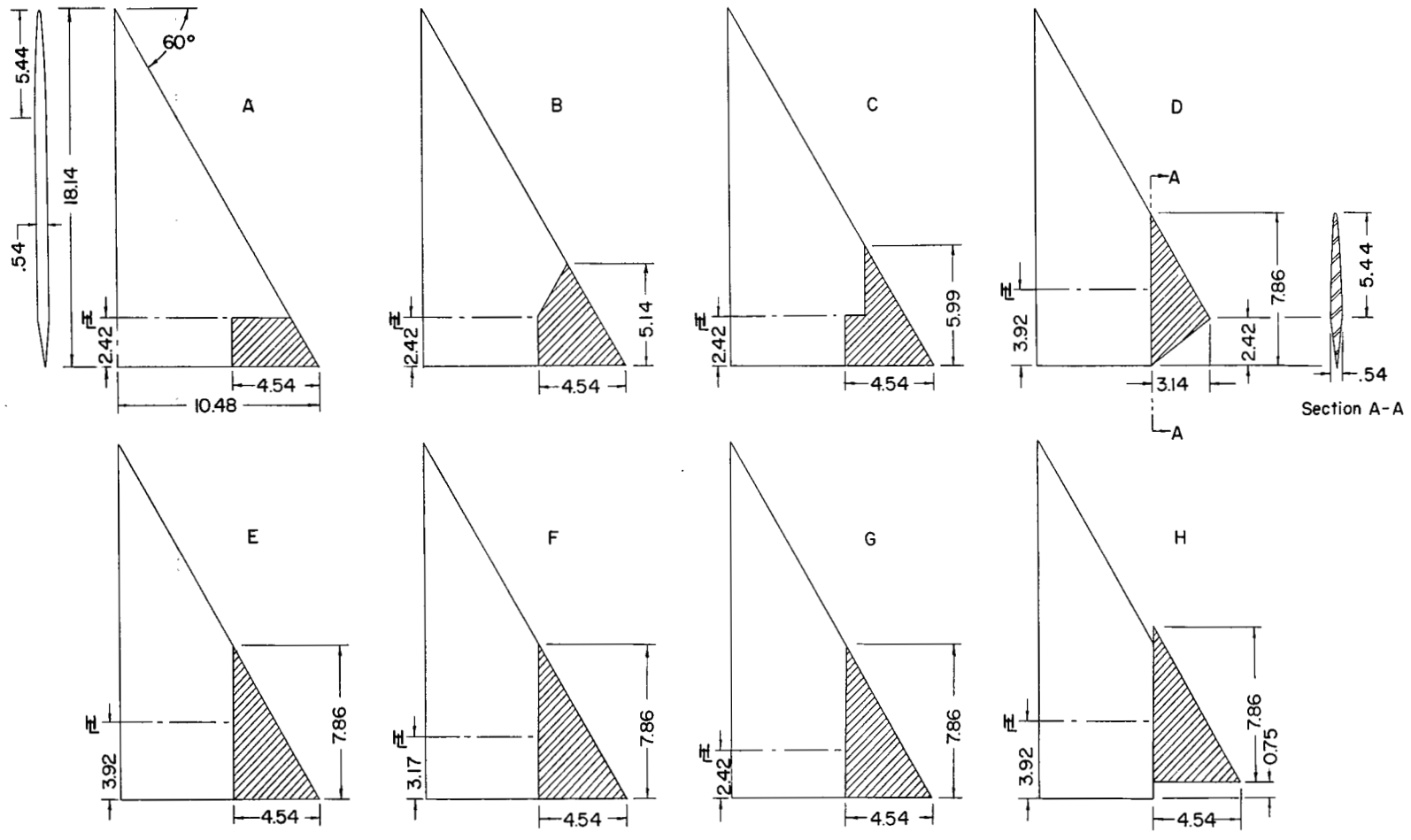

(a) Tip-control configurations.

Figure 1.- Dimensional sketches of test configurations. (All dimensions are in inches.)

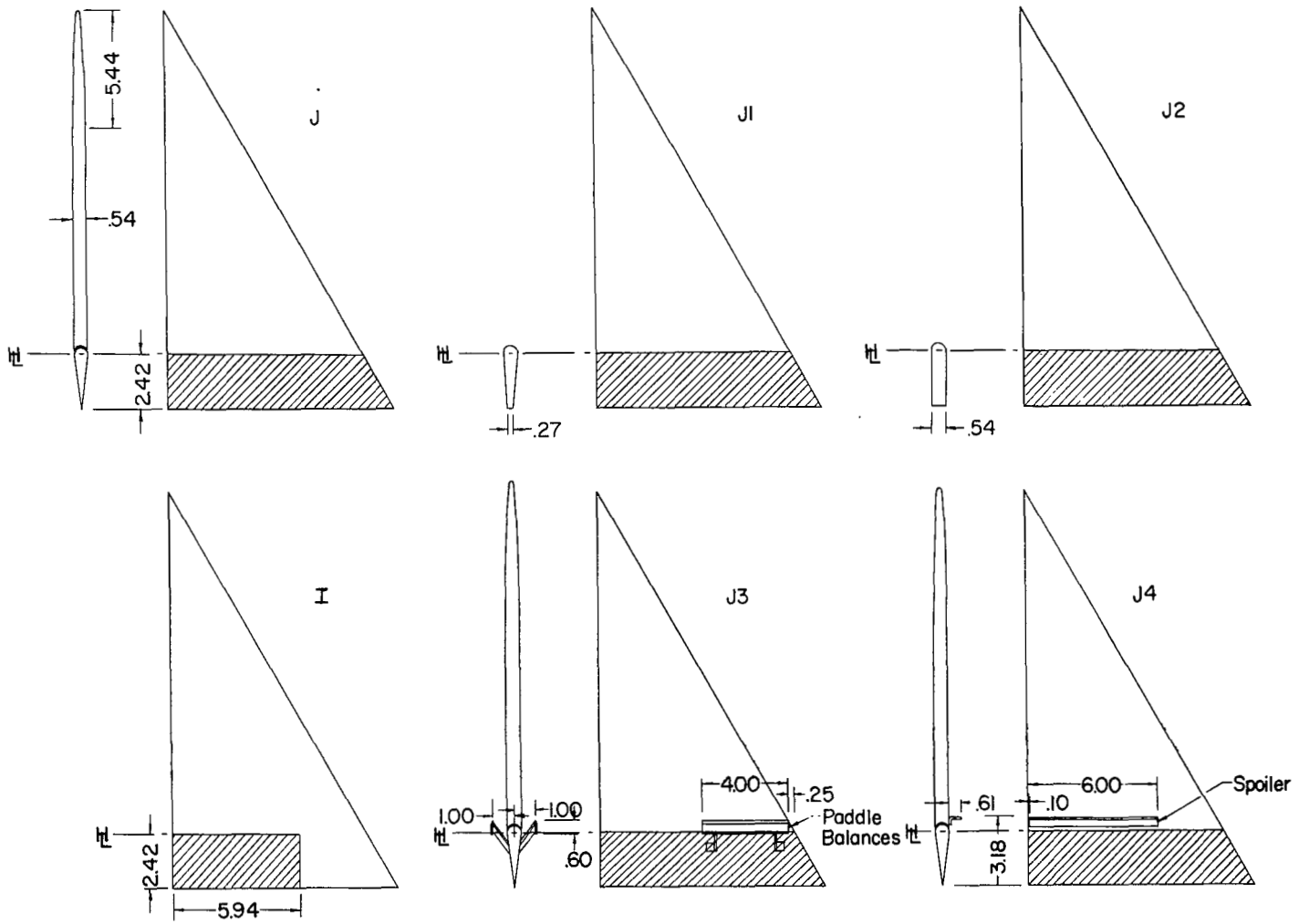

(b) Trailing-edge-control configurations.

Figure 1.- Continued.

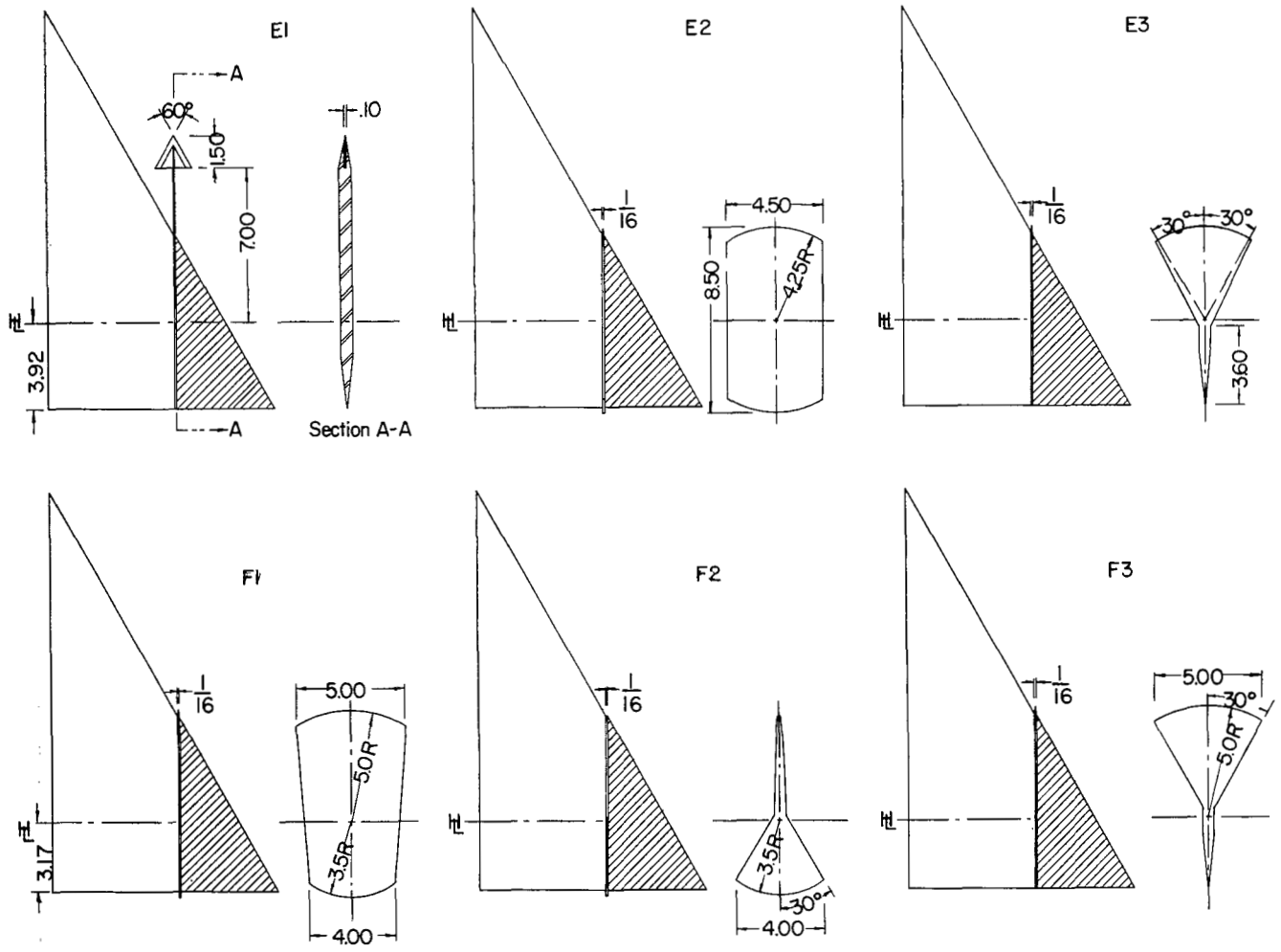

(c) Tab and fence configurations.

Figure 1.- Concluded.

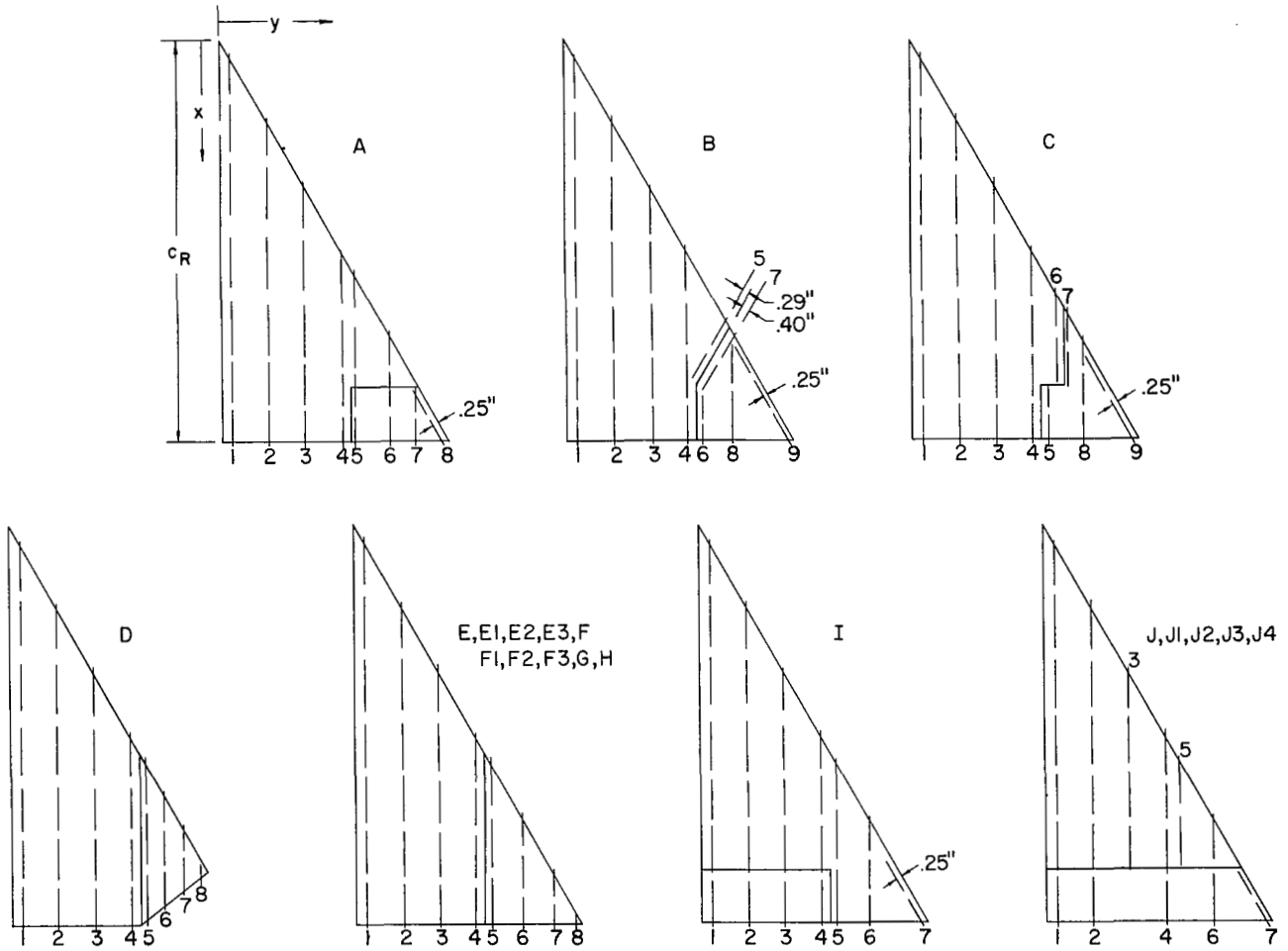

Figure 2.- Sketches showing approximate extent and location of orifice stations. Spanwise locations of stations are given in table 1 and chordwise locations of orifices in table 2.

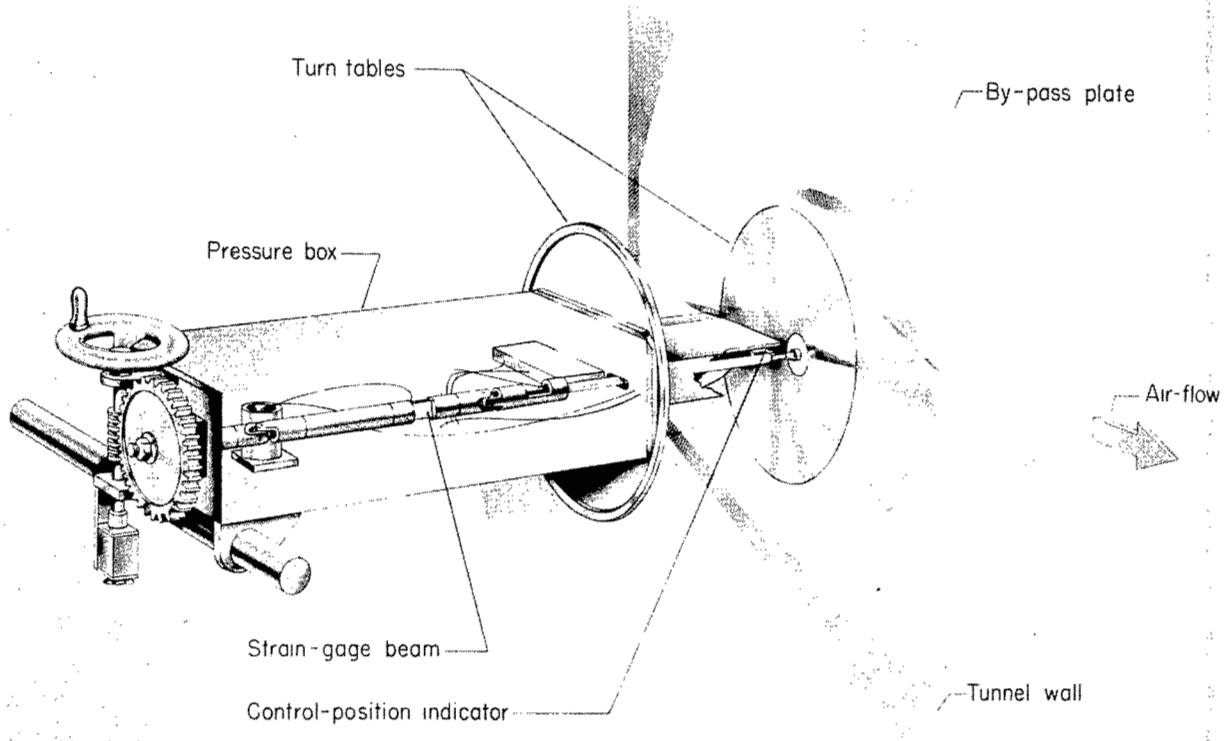

L-77038

Figure 3.- Sketch of test setup showing one of the tip-control installations.

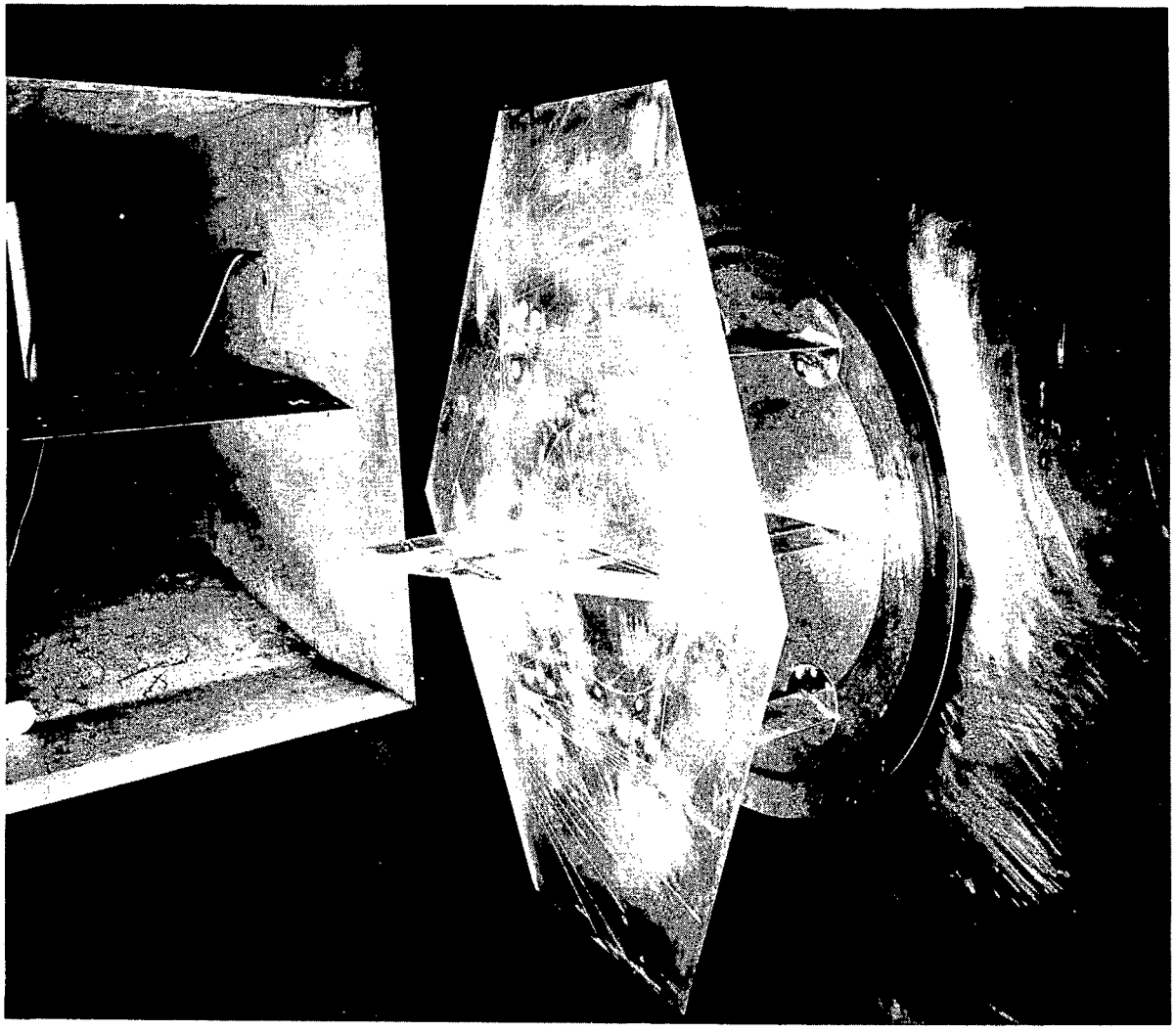

L-75294

Figure 4.- Photograph of configuration J mounted on boundary-layer bypass plate.

NASA Technical Library
3 1176 01437 7825

[redacted]

[redacted]

UNCLASSIFIED