UNCLASSIFIED
Inactive
~~CONFIDENTIAL~~

Copy No.

RM No. SA8D08

LANGLEY SUB-LIBRARY

NACA RM No. SA8D08

7 MAY 1948
CLASSIFICATION CHANGED
To UNCLASSIFIED Inactive
By authority of J. W. Crowley per NACA Release form # 2886 dtd 1-11-55 Date 1-31-55 NB

NACA

RESEARCH MEMORANDUM

for the

Air Materiel Command, U.S. Air Force

INVESTIGATION OF THE FLYING MOCK-UP OF THE CONSOLIDATED VULTEE XP-92 AIRPLANE IN THE AMES 40- BY 80-FOOT WIND TUNNEL.- PRESSURE DISTRIBUTIONS

By David Graham

Ames Aeronautical Laboratory
Moffett Field, Calif.

CLASSIFIED DOCUMENT

This document contains classified information affecting the National Defense of the United States within the meaning of the Espionage Act, USC 50:31 and 32. Its transmission or the revelation of its contents in any manner to an unauthorized person is prohibited by law. Information so classified may be imparted only to persons in the military and naval Services of the United States, appropriate civilian officers and employees of the Federal Government who have a legitimate interest therein, and to United States citizens of known loyalty and discretion who of necessity must be informed thereof.

CON[redacted]

TECHNICAL EDITING WAIVED

NATIONAL ADVISORY COMMITTEE FOR AERONAUTICS

WASHINGTON
April 9, 1948

~~CONFIDENTIAL~~

UNCLASSIFIED

N A C A LIBRARY
LANGLEY MEMORIAL AERONAUTICAL LABORATORY
Langley Field, Va.

NASA Technical Library
3 1176 01437 2800

NATIONAL ADVISORY COMMITTEE FOR AERONAUTICS

RESEARCH MEMORANDUM

for the

Air Materiel Command, U.S. Air Force

INVESTIGATION OF THE FLYING MOCK-UP OF THE CONSOLIDATED VULTEE XP-92 AIRPLANE IN THE AMES 40- by 80-FOOT WIND TUNNEL.- PRESSURE DISTRIBUTIONS

By David Graham

SUMMARY

This report contains the results of the wind-tunnel investigation of the pressure distribution on the flying mock-up of the Consolidated Vultee XP-92 airplane. Data are presented for the pressure distribution over the wing, vertical tail and the fuselage, and for the pressure loss and rate of flow through the ducted fuselage. Data are also presented for the calibration of two airspeed indicators, and for the calibration of angle-of-attack and sideslip-angle indicator vanes.

INTRODUCTION

At the request of the Air Materiel Command U.S. Air Force, the aerodynamic characteristics of the flying mock-up of the Consolidated Vultee XP-92 airplane have been investigated in the Ames 40- by 80-foot wind tunnel. The investigation consisted of two parts: (1) The determination of the force and moment characteristics; and (2) the determination of the distribution of pressure over the airplane, the air flow through the ducted fuselage, and calibration of airspeed indicators and angle-of-attack and sideslip-angle indicator vanes. The results of the first part of the investigation are given in reference 1, and this report contains the results of the second part.

No analysis of the data has been made at this time in order to make the data available as soon as possible.

[redacted]

UNCLASSIFIED

SYMBOLS AND COEFFICIENTS

The standard NACA coefficients and symbols used with this report are defined as follows and in figure 1:

A aspect ratio (b^2/S)

α free-stream angle of attack with reference to wing chord plane, degrees

α_T increment of angle of attack due to wind-tunnel-wall interference, degrees

b wing span, feet

β angle of sideslip with reference to vertical plane of symmetry, degrees

c wing chord, measured parallel to airplane center line, feet

$\bar{c}$ wing mean aerodynamic chord, measured parallel to airplane center line, feet

C wind-tunnel test-section area, normal to air stream, square feet

C_L lift coefficient (lift/qS)

δ_e elevator deflection (measured with reference to wing-chord plane in a plane perpendicular to the hinge line), degrees

δ_a aileron deflection (measured with reference to wing-chord plane in a plane perpendicular to the hinge line), degrees

δ_r rudder deflection (measured with reference to tail-chord plane in a plane perpendicular to the hinge line), degrees

δ_w wind-tunnel-wall-interference correction factor

H_l local total pressure, pounds per square foot

H_o free-stream total pressure, pounds per square foot

ν kinematic viscosity, square feet per second

P_t total-pressure coefficient $\left(1 - \frac{H_o - H_l}{q_o}\right)$

P_s static-pressure coefficient $\left(\frac{p_l - p_o}{q_o}\right)$

p_l local static pressure, pounds per square foot

p_o free-stream static pressure, pounds per square foot

q_o free-stream dynamic pressure, pounds per square foot

R Reynolds number $\left(\frac{V_o \bar{c}}{\nu}\right)$

S wing area, square feet

V_o free-stream velocity, feet per second

Description of Airplane and Apparatus

The investigation of the flying mock-up of the Consolidated Vultee XP-92 airplane was conducted in the Ames 40- by 80-foot wind tunnel. A three-view drawing of the mock-up is shown in figure 2. Pertinent dimensions in addition to those presented in figure 2 are as follows:

Wing area, S (total)	425 sq ft
Wing area exposed outside of fuselage	296 sq ft
Trailing-edge flaps area (aft of hinge line, both flaps)	76.60 sq ft
Vertical tail area (total exposed above fuselage)	76.10 sq ft
Rudder area (aft of hinge line)	15.50 sq ft

More complete information about the airplane is given in reference 1.

Orifices for the measurement of static pressures on the left wing, vertical tail, and fuselage were located in the positions indicated in tables 1 and 2, and figure 3. The orifice openings were located flush with the airplane skin.

Two survey rakes were located in the ducted fuselage, one at the inlet and the second at fuselage station 314 as shown in figure 4. The locations and numbering of the tubes in the rakes are also shown in figure 4.

A standard Kollsman airspeed indicator was mounted about 3 feet forward of the nose inlet as shown in figure 5. A shrouded total-head tube was mounted on the airspeed indicator support. Also on the support were two vanes for the indication of the angle of attack and the sideslip angle. The positions of the vanes were indicated remotely by Magnesyn transmitters and receivers. The receiver dials were divided into 360 divisions. A second Kollsman airspeed indicator was mounted from the leading edge of the vertical tail. Figure 5 shows the relative positions of the airspeed indicators, shrouded total-head tube, and the angle-of-attack and sideslip-angle indicator vanes.

TESTS, RESULTS, AND DISCUSSION

Pressure Distribution Over the Airplane and Air Flow Through Ducted Fuselage

The pressure distribution over the airplane was determined by measuring the pressures on the left wing, vertical tail, and fuselage. Concurrently with these measurements, the pressure losses and the rates of flow of air through the ducted fuselage were also determined. Table 3 summarizes the ranges of angle of attack, sideslip angle, and control positions covered by these tests. In any of the tables where the notations $\pm 10^{\circ}$ or $\mp 10^{\circ}$ are used for aileron deflection, the upper sign indicates the deflection of the right flap and the lower sign the deflection of the left flap in combinations with the specified elevator deflection. The tests were conducted at a dynamic pressure of 25 pounds per square foot ($R = 16.4 \times 10^{6}$, based on wing mean aerodynamic chord) for angles of attack up to and including 30° angle of attack. Above 30° angle of attack, the dynamic pressure was reduced to 20 pounds per square foot ($R = 14.9 \times 10^{6}$).

The results of these tests are presented in tables 4 through 41 for which table 3 serves as an index. In these tables, lines have been drawn through the values of pressure coefficient which are doubtful due to the presence of leaks or plugs in the orifices or connecting pressure lines. All the data presented have been given routine computational checks, but no secondary checks have been made by plotting. For the dynamic pressures used during these

tests, pressure coefficients were measurable within ±0.01.

The values of angle of attack given in these tables are the corrected free-stream values. To obtain these values, the geometric angles of attack were corrected for stream-angle inclination and wind-tunnel-wall effects. The stream-angle correction was approximately 0.04° (additive) for all the tests. The wall correction was based on the theory of reference 2 for a wind tunnel of oval cross section and a wing of the same span as the test wing but rectangular in plan form. The resulting wall correction is as follows:

$$\alpha_T = \delta_W \frac{S}{C} \times C_L \times 57.3$$

where

$$\delta_W = 0.110$$

$$C = 2856 \text{ square feet}$$

The values for C_L were obtained from the force-test data of reference 1 for runs with conditions similar to those of the pressure tests.

Calibration of the Various Indicators

The effects of angle of attack and sideslip angle on the readings of the two airspeed indicators, the shrouded total-pressure tube, and the angle-of-attack and sideslip-angle indicators were determined by varying the angle of attack from 0° to 36° for constant sideslip angles of approximately 10°, 0°, -5°, -10°, -15°, and -20°. The dynamic pressure was held at 25 pounds per square foot for angles of attack up to and including 28°. For angles of attack above 28°, the dynamic pressure was reduced to 20 pounds per square foot. One calibration test was also made in which the angle of attack was held constant at 0°, and the dynamic pressure was varied from approximately 10 to 126 pounds per square foot.

For most of these tests, the controls were undeflected. One test was made, however, to determine the effect of elevator deflection on the readings of the various indicators. The effect of rudder deflection on the fin airspeed indicator was also determined by tests at several angles of sideslip.

In the case of the nose airspeed indicator and the angle-of attack and sideslip-angle indicators, it was thought that the rate of air flow through the ducted fuselage might influence the readings of these indicators. In order to determine the effect of the air-flow rate, one test was made with the duct blocked.

The results of these calibration tests are presented in table 42 for the two airspeed indicators and the shrouded total-pressure tube, and in table 43 for the angle-of-attack, and the sideslip-angle indicators. Also included in table 43, are the static calibrations of the two angle indicators.

With regard to the accuracy of the measurements for the two airspeed indicators and the shrouded total-pressure tube, the pressure coefficients were measurable within $\pm 0.25/q$ (or ± 0.01 at $q=25$ lb/sq ft to ± 0.0025 at $q=100$ lb/sq ft). In the case of the two angle indicators, the readings are given to the least count of the dials. However, the readings are probably not that accurate since they represent averages of fluctuating readings. The fluctuations were steady in nature and generally of the order of ± 5 counts. There were no noticeable changes in the fluctuations with changes in either angle of attack or sideslip angle.

In comparing the tunnel-on readings of the angle-of-attack indicator with the static readings, it will be noted that at 0° angle of attack the indicator had a reading corresponding to a positive angle of attack of approximately 2°. The reason for this result is not known. It cannot be attributed to upwash since the airplane was at zero lift. A possible explanation is that the indicator vane was pivoted above its plane of symmetry with the result that the drag of the vane would rotate the vane (in a positive α direction) until the moment due to the lift on the vane balanced the drag moment. The sideslip-angle indicator did not show this effect (tunnel-on and static readings approximately the same at zero sideslip).

Ames Aeronautical Laboratory,
National Advisory Committee for Aeronautics,
Moffett Field, Calif.

REFERENCES

1. Wick, Bradford H., and Graham, David: Investigation of the Flying Mock-Up of the Consolidated Vultee XP-92 Airplane in the Ames 40- by 80-Foot Wind Tunnel.- Force and Moment Characteristics. NACA RM No. SA8B04, 1948, U.S. Air Force.

2. Tani, Itiro and Sanuki, Matao: The Wall Interference of a Wind Tunnel of Elliptic Cross Section. NACA TM No. 1075, 1944.

TABLE 1.– LOCATION OF THE PRESSURE ORIFICES ON THE LEFT WING OF THE FLYING MOCK-UP OF THE XP-92 AIRPLANE

Orifice[1] number	Fuselage[2] station	Wing[3] station	Orifice[1] number	Fuselage[2] station	Wing[3] station
101	239.63	41.75	139	404.37	65.28
102	238.65	36.40	140	405.00	64.93
103	No orifice	No orifice	141	405.00	98.83
104	No orifice	No orifice	142	404.74	98.77
105	239.00	56.40	143	405.06	136.84
106	238.46	55.70	144	403.80	137.12
107	239.00	63.00	145	404.62	152.10
108	238.34	63.40	146	404.53	151.95
109	282.00	36.66	147	411.54	37.50
110	281.74	36.80	148	411.69	37.70
111	282.12	56.64	149	411.66	69.98
112	281.80	59.10	150	411.69	69.40
113	282.12	78.28	151	411.66	109.40
114	281.70	78.70	152	411.74	109.70
115	282.00	87.20	153	411.66	142.55
116	281.60	87.78	154	411.69	142.86
117	320.12	35.87	155	411.79	158.63
118	319.88	37.25	156	411.91	160.30
119	320.18	44.75	157	422.91	39.13
120	319.85	45.75	158	423.04	39.20
121	320.00	73.90	159	423.04	70.18
122	320.00	74.35	160	422.99	70.04
123	319.81	97.08	161	423.04	112.22
124	319.68	97.64	162	423.04	112.80
125	319.88	108.00	163	423.04	147.43
126	319.87	108.13	164	423.04	147.65
127	366.88	37.00	165	423.04	162.50
128	366.86	37.10	166	423.04	162.32
129	366.81	55.74	167	447.04	37.75
130	366.90	55.36	168	446.99	37.91
131	366.56	92.82	169	447.04	75.14
132	366.82	93.36	170	446.99	76.00
133	366.32	119.27	171	447.04	121.37
134	366.50	119.99	172	447.01	121.70
135	366.75	133.80	173	447.04	159.18
136	366.81	133.78	174	446.99	159.60
137	405.56	37.00	175	447.04	176.72
138	405.00	37.10	176	446.97	176.65

[1]Even-numbered orifices are on the upper surface of the airfoil, odd-numbered orifices on the lower surface.

[2]Fuselage stations are in inches with the apex of the wing at station 123.21 and trailing edge at station 448.79.

[3]The wing stations are in inches from the fuselage center line.

TABLE 2.– LOCATION OF THE PRESSURE ORIFICES ON THE VERTICAL TAIL OF THE FLYING MOCK-UP OF THE XP-92 AIRPLANE

Orifice[1]	Fuselage[2] station	Vertical[3] station	Orifice[1]	Fuselage[2] station	Vertical[3] station
201	281.60	47.41	229	423.00	70.65
202	282.00	47.51	230	423.90	70.25
203	281.70	44.08	231	422.00	38.20
204	282.00	44.08	232	421.80	37.80
205	281.20	37.68	233	432.20	130.00
206	281.60	38.63	234	432.50	129.50
207	281.20	36.30	235	431.00	110.60
208	281.60	36.80	236	431.00	110.70
209	318.80	66.90	237	431.00	73.70
210	319.00	67.40	238	431.30	73.80
211	318.00	58.90	239	431.20	35.70
212	318.20	64.30	240	431.10	35.80
213	318.10	47.20	241	438.10	132.30
214	318.10	47.90	242	437.80	132.30
215	317.80	37.80	243	437.10	112.00
216	317.95	37.80	244	437.00	112.00
217	367.10	94.80	245	437.20	74.90
218	365.50	94.30	246	437.10	75.00
219	366.50	71.36	247	437.20	35.70
220	366.90	72.66	248	437.10	35.80
221	366.20	50.73	249	443.70	135.00
222	366.80	57.53	250	443.40	135.30
223	359.50	37.50	251	447.00	103.30
224	360.00	37.10	252	446.80	103.00
225	423.65	122.70	253	446.90	78.50
226	423.60	123.40	254	446.80	78.20
227	423.30	93.45	255	447.00	35.90
228	423.40	94.55	256	446.90	35.60

[1]Even-numbered orifices are on the left side of the vertical tail, odd-numbered orifices on the right side.

[2]Fuselage stations are in inches with the leading edge of the vertical tail at fuselage station 254.79 where it intersects the fuselage and the trailing edge at station 448.79.

[3]The vertical stations are in inches above the fuselage center line.

TABLE 3.- SUMMARY OF TEST CONDITIONS
FOR PRESSURE-DISTRIBUTION MEASUREMENTS

Table no.	Angle of attack range (deg)	Angle of sideslip, β (deg)	δ_e	δ_a	δ_r
Landing gear retracted					
4	0 – 32	0.13°	0	0	0
5	↓	-5.00	↓	↓	↓
6		5.00			
7		-10.06			
8		9.98			
9		-20.20			
10		20.17			
11	4 – 32	.13	-5°		
12	8 – 32	.13	-10		
13	12 – 32	.13	-20		
14	4 – 32	-10.06	-5		
15	↓	9.98	-5		
16		-10.06	-10		
17		9.98	-10		
18		-10.06	-20		
19		9.98	-20	↓	
20		.13	0	±10	
21		.13	0	∓10	
22		.13	-10	±10	
23		.13	-10	∓10	
24		.13	-20	±10	
25		.13	-20	∓10	
26		-10.06	-10	±10	
27		9.98	-10	∓10	↓
28		.13	-10	0	-10
29		-10.06	↓	↓	-10
30		9.98			-10
31		-10.06			-20
32		9.98			-20
33		-10.06			10
34	↓	9.98	↓	↓	10
Landing gear extended					
35	4 – 32	0.13	-10	0	0
36	↓	.13	↓	±10	0
37		.13		∓10	0
38		-10.06		±10	-10
39		9.98		∓10	-10
40		-10.06		±10	10
41	↓	9.98	↓	∓10	10

TABLE 4.- PRESSURE COEFFICIENTS FOR THE FLYING MOCK-UP OF THE XP-92 AIRPLANE, CONTROLS NEUTRAL; $\beta = 0.13^{\circ}$

(a) Wing

Orifice No. \ α	0.04	4.21	8.27	12.54	16.73	20.89	25.03	29.10	33.10
101	-0.06	0.04	0.15	0.26	0.36	0.46	0.57	0.68	0.56
102	-.02	-.13	-.26	-.36	-.54	-.76	-.89	-1.47	-1.85
103	- - -	- - -	- - -	- - -	- - -	- - -	- - -	- - -	- - -
104	- - -	- - -	- - -	- - -	- - -	- - -	- - -	- - -	- - -
105	-.04	.11	.21	.28	.34	.37	.40	.45	.33
106	-.04	-.21	-.43	-.66	-1.04	-2.41	-3.70	-2.71	-1.95
107	-.02	.19	.23	.19	.04	-.13	-.10	-.21	-.31
108	-.04	-.33	-.79	-1.28	-2.86	-3.72	-3.08	-2.44	-1.85
109	-.08	-.02	.06	.17	.26	.33	.43	.51	.41
110	-.08	-.15	-.26	-.28	-.40	-.54	-.70	-.87	-1.00
111	-.08	.02	.11	.19	.30	.37	.47	.55	.44
112	-.11	-.21	-.34	-.43	-.56	-.74	-1.66	-1.83	-1.59
113	-.06	.08	.17	.26	.34	.37	.40	.47	-.33
114	-.11	-.27	-.51	-.74	-2.66	-2.70	-2.06	-1.70	-1.46
115	-.02	.19	.21	.19	.16	.11	.09	.09	-.05
116	-.06	-.40	-.87	-1.40	-2.44	-2.09	-1.74	-1.47	-1.51
117	-.19	-.11	-.04	.04	.12	.18	.28	.34	.26
118	-.11	-.17	-.23	-.26	-.32	-.48	-.64	-.68	-.87
119	-.15	-.06	0	.09	.18	.24	.34	.45	.33
120	-.13	-.19	-.28	-.32	-.42	-.61	.74	-.98	-1.13
121	-.13	-.02	.06	.17	.26	.33	.40	.47	.36
122	-.13	-.23	-.34	-.45	-.42	-1.17	-1.51	-1.45	-1.33
123	-.02	.08	.15	.21	.30	.30	.36	.38	.26
124	-.13	-.29	-.51	-.74	-2.42	-1.70	-1.49	-1.28	-1.21
125	-.11	.13	.19	.19	.26	.24	.21	.15	0
126	-.11	-.42	-.85	-1.66	-1.72	-1.41	-1.28	-1.13	-1.10
127	-.13	-.08	-.04	.02	.08	.11	.19	.23	.13
128	-.15	-.19	-.23	-.26	-.34	-.48	-.62	-.66	-.87
129	-.11	-.04	-.02	.04	.12	.16	.23	.28	.18
130	-.13	-.17	-.23	-.28	-.36	-.52	-.74	-.91	-1.05
131	-.13	-.04	.02	.11	.16	.20	.28	.30	.20
132	-.15	-.21	-.32	-.40	-.56	-1.11	-1.17	-1.11	-1.15
133	-.13	0	.09	.19	.24	.26	.32	.36	.23
134	-.15	-.29	-.47	-.53	-1.24	-1.07	-1.06	-1.00	-1.03
135	-.08	.11	.19	.28	.30	.28	.30	.30	.13
136	-.08	-.42	-.79	-2.49	-1.00	-.83	-.94	-.79	-1.00
137	-.02	0	.02	.06	.10	.09	.15	.15	.03
138	-.06	-.06	-.11	-.11	-.16	-.28	-.34	-.53	-.77
139	0	.02	.04	.06	.10	.11	.17	.15	.05
140	-.04	-.04	-.09	-.11	-.18	-.37	-.60	-.79	-.95
141	-.04	0	.02	.07	.10	.09	.13	.13	.03
142	-.04	-.08	-.15	-.19	-.36	-.78	-.11	-.91	-1.03

TABLE 4.– CONTINUED

(a) Wing (Concluded)

Orifice No. \ α	0.04	4.21	8.27	12.54	16.73	20.89	25.03	29.10	33.10
143	-0.06	0.02	0.06	0.11	0.16	0.13	0.19	0.23	0.08
144	-.13	-.21	-.38	-.87	-.80	-.78	-.83	-.85	-.92
145	-.06	.08	.13	.17	.18	.18	.21	.23	.10
146	-.11	-.33	-.74	-.96	-.66	-.70	-.74	-.77	-.90
147	.08	.11	.13	.15	.20	.20	.21	.17	.31
148	-.06	-.06	-.09	-.06	-.14	-.26	-.32	-.51	-.74
149	~~.02~~	~~.02~~	~~.02~~	~~.02~~	~~0~~	~~0~~	~~-.32~~	~~-.06~~	~~-.23~~
150	.06	-.06	-.09	-.11	-.18	-.37	-.64	-.85	-1.03
151	.02	.01	.26	.30	.34	.37	.45	.47	.33
152	.02	-.08	-.15	-.19	-.68	-.93	-1.00	-.98	-1.05
153	-.15	-.13	-.15	.57	.58	.59	.62	.66	.51
154	-.19	-.31	-.45	-1.04	-.76	-.78	-.83	-.85	-.95
155	-.04	.13	.19	.23	.26	.24	.28	.30	.15
156	-.13	-.38	-.62	-.91	-.64	-.67	-.72	-.77	-.87
157	.02	.04	.04	.09	.12	.11	.15	.13	0
158	-.02	-.02	-.06	-.04	-.10	-.22	-.26	-.47	-.69
159	.02	.06	.06	.09	.10	.09	.09	.09	-.05
160	0	-.02	-.04	-.06	-.12	-.30	-.53	-.77	-.92
161	-.02	.02	.04	.06	.06	.02	.02	.02	-.10
162	-.02	-.06	-.11	-.13	-.58	-.78	-.85	-.87	-.97
163	-.06	0	.04	.06	.04	.04	.09	.09	-.03
164	-.06	-.15	-.26	-.85	-.62	-.65	-.72	-.74	-.85
165	-.13	.02	.09	.11	.12	.11	.15	.15	-.03
166	-.13	-.27	-.36	-.70	-.54	-.61	-.66	-.72	-.85
167	.13	.15	.13	.15	.16	.13	.17	.04	-.23
168	.13	.13	.13	.15	.14	.07	.13	-.06	-.44
169	.11	.11	.09	.11	.08	0	-.13	-.30	-.54
170	.13	.13	.11	.09	.06	.07	-.28	-.53	-.82
171	.13	.13	.11	.09	-.14	-.30	-.36	-.43	-.59
172	.13	.11	.06	.06	-.38	-.59	-.89	-.77	-.92
173	.13	.13	.06	-.17	-.18	-.24	-.26	-.28	-.41
174	.11	.08	-.13	-.51	-.44	-.57	-.62	-.70	-.82
175	0	-.04	-.21	-.21	-.22	-.28	-.28	-.36	-.49
176	.08	-.15	-.57	-.38	-.40	-.48	-.53	-.66	-.77

Note: A line has been drawn through the pressure coefficients for which the data are doubtful.

TABLE 4.– CONTINUED

(b) Vertical tail

Orifice No. \ α	0.04	4.21	8.21	12.54	16.75	20.89	25.03	29.10	33.10
201	0	-0.02	-0.06	-0.13	-0.19	-0.22	-0.32	-0.44	-0.78
202	-.04	-.11	-.11	-.18	-.23	-.26	-.34	-.31	-.43
203	-.06	-.09	-.15	-.18	-.25	-.28	-.36	-.50	-.84
204	~~.15~~	~~.19~~	~~.19~~	~~.20~~	~~.19~~	~~.20~~	~~.17~~	~~.15~~	~~.05~~
205	-.06	-.09	-.13	-.18	-.25	-.26	-.38	-.48	-.81
206	~~.11~~	~~.15~~	~~.19~~	~~.20~~	~~.21~~	~~.24~~	~~.15~~	~~.21~~	~~.16~~
207	-.06	-.09	-.13	-.18	-.23	-.28	-.38	-.46	-.78
208	-.09	-.11	-.17	-.22	-.27	-.33	-.40	-.42	-.62
209	-.13	-.13	-.17	-.22	-.29	-.33	-.43	-.54	-.76
210	-.11	-.13	-.17	-.22	-.25	-.30	-.38	-.38	-.57
211	-.13	-.13	-.17	-.22	-.29	-.33	-.43	-.54	-.76
212	-.15	-.17	-.19	-.24	-.29	-.35	-.45	-.48	-.70
213	-.15	-.17	-.21	-.24	-.31	-.37	-.49	-.61	-.86
214	-.13	-.17	-.21	-.24	-.31	-.35	-.47	-.52	-.78
215	-.09	-.11	-.15	-.18	-.23	-.28	-.40	-.52	-.76
216	~~-.15~~	~~-.19~~	~~-.23~~	~~-.28~~	~~-.33~~	~~-.39~~	~~-.49~~	~~-.58~~	~~-.84~~
217	-.13	-.11	-.15	-.18	-.23	-.26	-.34	-.50	-.65
218	-.13	-.13	-.15	-.20	-.21	-.24	-.34	-.35	-.54
219	-.17	-.17	-.21	-.24	-.29	-.35	-.45	-.58	-.81
220	-.17	-.17	-.21	-.24	-.29	-.33	-.45	-.54	-.78
221	-.21	-.21	-.23	-.28	-.35	-.41	-.53	-.52	-.95
222	-.21	-.21	-.23	-.28	-.31	-.39	-.53	-.67	-.92
223	-.19	-.19	-.23	-.28	-.31	-.39	-.53	-.69	-.89
224	-.19	-.21	-.26	-.28	-.31	-.41	-.55	-.40	-.89
225	-.19	-.17	-.19	-.20	-.23	-.46	-.28	-.33	-.54
226	-.15	-.13	-.21	-.16	-.19	-.41	-.26	-.40	-.49
227	-.09	-.06	-.09	-.11	-.15	-.18	-.26	-.35	-.57
228	-.06	-.06	-.09	-.09	-.13	-.16	-.23	-.46	-.57
229	~~.11~~	~~.15~~	~~.19~~	~~.20~~	~~.21~~	~~.24~~	~~.23~~	~~.21~~	~~.19~~
230	-.04	-.04	-.06	-.09	-.13	-.18	-.28	-.46	-.68
231	-.06	-.06	-.09	-.11	-.15	-.20	-.34	-.50	-.68
232	-.06	-.06	-.09	-.11	-.15	-.22	-.34	-.52	-.70
233	-.17	-.15	-.17	-.18	-.19	-.22	-.26	-.35	-.59
234	-.06	-.15	-.15	-.16	-.17	-.18	-.23	-.29	-.46
235	-.15	-.04	-.09	-.09	-.13	-.16	-.19	-.29	-.46

Note: Lines have been drawn through the pressure coefficients for which the data are doubtful.

TABLE 4.– CONTINUED

(b) Vertical tail (Concluded)

Orifice No. \ α	0.04	4.21	8.27	12.54	16.73	20.89	25.03	29.10	33.10
236	-0.11	-0.11	-0.15	-0.18	-0.19	-0.22	-0.23	-0.38	-0.54
237	-.02	0	-.02	-.04	-.08	-.11	-.21	-.35	-.54
238	0	.02	0	-.02	-.04	-.09	-.19	-.35	-.57
239	-.02	-.02	-.04	-.07	-.11	-.16	-.26	-.44	-.59
240	-.04	-.04	-.06	-.09	-.11	-.18	-.28	-.46	-.65
241	-.17	-.15	-.17	-.18	-.19	-.22	-.26	-.33	-.49
242	-.15	-.13	-.13	-.16	-.17	-.18	-.23	-.29	-.43
243	-.02	0	-.02	-.04	-.06	-.09	-.15	-.25	-.41
244	-.02	0	-.04	-.07	-.11	-.11	-.17	-.25	-.43
245	0	.02	0	-.02	-.06	-.09	-.19	-.35	-.54
246	.02	.04	.02	0	-.04	-.07	-.17	-.33	-.54
247	0	.02	0	-.02	-.06	-.11	-.21	-.38	-.54
248	0	.02	0	-.02	-.06	-.11	-.23	-.40	-.57
249	-.11	-.09	-.11	-.11	-.15	-.16	-.19	-.27	-.41
250	-.11	-.09	-.11	-.13	-.15	-.16	-.23	-.27	-.41
251	.06	.09	.06	.04	.02	0	-.06	-.15	-.35
252	.06	.09	.06	.07	.02	0	-.06	-.15	-.35
253	.06	.06	.06	.04	0	-.02	-.11	-.19	-.43
254	.11	.11	.09	.07	.06	-.02	-.06	-.19	-.65
255	.04	.06	.04	.02	0	-.04	-.15	-.29	-.49
256	.06	.09	.06	.07	.02	-.02	-.13	-.27	-.49

TABLE 4.– CONTINUED

(c) Fuselage

Orifice No. \ α	0.04	4.21	8.27	12.54	16.73	20.89	25.03	29.10	33.10
301	0.26	0.15	0.04	-0.06	-0.20	-0.49	-0.85	-1.06	-1.11
302	.28	.23	.09	-.02	-.06	-.36	-.66	-1.00	-1.11
303	.28	.25	.19	.13	0	-.13	-.30	-.50	-.65
304	.28	.35	.40	.40	.43	.43	.43	.38	.35
305	.26	.38	.47	.53	.63	.70	.79	.85	.92
306	~~.21~~	~~.27~~	~~.32~~	~~.32~~	~~.33~~	~~.32~~	~~.28~~	~~.21~~	~~.16~~
307	.30	.27	.26	.17	.08	-.04	-.23	-.29	-.59
308	.28	.19	.09	-.02	-.18	-.36	-.81	1.19	-1.19
309	.15	.06	.02	-.04	-.10	-.15	-.19	-.25	-.32
310	.15	.06	0	-.06	-.16	-.26	-.38	-.54	.65
311	.11	.08	.02	-.06	-.16	-.32	-.51	.77	-.97
312	.11	.15	.17	.17	-.16	.13	.11	.02	-.03
313	.13	.21	.28	.32	.41	.47	.55	.61	.65
314	.13	.17	.17	.15	.14	.09	0	-.13	-.24
315	.13	.13	.09	.02	-.08	-.21	-.40	-.65	-.86
316	.15	.08	.02	-.06	-.16	-.28	-.43	-.63	-.78
317	.04	0	-.04	-.11	-.20	-.30	-.43	-.56	-.68
318	0	0	-.04	-.11	-.22	-.36	-.53	-.77	-.97
319	0	.04	.04	.04	.04	0	-.04	-.11	-.16
320	0	.06	.13	.19	.24	.32	.40	.50	.57
321	.02	.06	.06	.09	.08	.04	.02	-.06	-.14
322	0	0	-.02	-.09	-.16	-.30	-.47	-.69	-.89
323	.02	-.02	-.06	-.15	-.22	-.32	-.45	-.61	-.70
324	-.13	-.17	-.19	-.23	-.27	-.32	-.40	-.50	-.57
325	-.09	-.02	0	.06	.12	.19	.26	.33	.41
326	-.09	-.06	-.04	-.04	-.06	-.09	-.11	-.19	-.24
327	-.28	-.33	-.38	-.40	-.45	-.45	-.49	-.50	-.51
328	-.02	-.08	-.15	-.23	-.37	-.47	-.62	-.79	-.92
329	-.02	.02	.06	.11	.18	.26	.36	.42	.49
330	-.02	0	.02	.04	.02	-.02	-.06	-.13	-.14
331	.11	.06	.04	0	-.04	-.11	-.13	-.21	-.35
332	-.13	-.17	-.23	-.28	-.49	-.66	-.91	-.98	-1.24
333	-.19	-.15	-.06	0	.08	.15	.23	.27	.32
334	-.15	-.08	-.02	.06	.14	.21	.30	.33	.38
335	-.15	-.19	-.21	-.30	-.37	-.47	-.57	-.81	-1.05
336	-.09	-.11	-.13	-.15	-.18	-.28	-.47	-.71	-.92
337	-.13	-.11	-.06	0	.04	.11	.15	.17	.19
338	-.13	-.08	-.04	.02	.06	.09	.17	.19	.22
339	-.06	-.06	-.06	.06	-.12	-.19	-.36	-.61	-.78
340	~~2.62~~	~~2.59~~	~~2.62~~	~~2.62~~	~~2.53~~	~~2.62~~	~~2.62~~	~~2.57~~	~~3.19~~

Note: Lines have been drawn through the pressure coefficients for which the data are doubtful.

TABLE 4.– CONTINUED

(c) Fuselage (Concluded)

Orifice No. \ α	0.04	4.21	8.27	12.54	16.73	20.89	25.03	29.10	33.10
341	0	0.02	0.04	0.06	0.10	0.11	0.15	0.13	0.14
342	0	.02	.04	.06	.12	.13	.17	.15	.16
343	-.13	-.13	-.17	-.28	-.33	-.45	-.49	-.69	-.81
344	-.06	-.06	-.09	-.09	-.14	-.21	-.34	-.58	-.78
345	.02	.04	.06	.06	.10	.11	.13	.08	.05
346	.02	.04	.06	.09	.12	.11	.15	.11	.08
347	.04	.06	.06	.09	.12	.13	.15	.13	.11
348	.02	.04	.06	.09	.12	.13	.15	.13	.11
349	.02	.04	.09	.09	.12	.13	.15	.13	.11
350	.06	.06	.06	.06	.04	0	-.02	-.15	-.27
351	.04	.04	.06	.04	.04	.04	-.06	-.17	-.30
352	.04	.04	.06	.06	.08	.09	.11	-.02	-.22
353	-.04	-.04	0	0	.04	.04	.09	0	-.05
354	.04	.04	.06	.06	.08	.09	.11	0	-.16
355	.06	.04	.04	.04	.04	.04	-.04	-.13	-.24
356	.06	.06	.06	.06	.04	0	-.02	-.13	-.24
357	.06	.06	.06	.06	.02	-.02	-.06	-.19	-.30
358	~~.36~~	~~.38~~	~~.40~~	~~.36~~	~~.35~~	~~.30~~	~~.28~~	~~-.17~~	~~.08~~
359	.11	.11	.11	.09	.08	.04	-.02	-.08	-.19
360	.09	.08	.06	.04	.04	.02	-.02	-.17	-.35
361	.04	.02	0	-.02	-.06	-.09	-.13	-.27	-.38
362	.06	.06	.04	.04	.02	-.02	-.02	-.19	-.38
363	.09	.08	.09	.06	.06	.04	0	-.11	-.22
364	.11	.11	.11	.11	.10	.09	.04	-.04	-.14
365	.13	.13	.13	.13	.12	.09	.11	.02	-.08
366	-.04	-.11	-.17	-.23	-.37	-.53	-.83	-1.13	-1.43
367	-.06	0	.09	.15	.24	.32	.40	.44	.46
368	-.06	0	.09	.13	.22	.30	.40	.44	.49
369	.09	.11	.15	.23	.22	.23	.26	.23	.22
370	.09	.11	.15	.23	.22	.26	.26	.23	.22
371	.13	.15	.19	.21	.24	.23	.23	.21	.14
372	.13	.15	.19	.21	.24	.23	.23	.21	.14

Note: A line has been drawn through the pressure coefficients for which the data are doubtful.

TABLE 4.- CONCLUDED

(d) Fuselage-duct rakes

Tube No. \ α	0.04	4.21	8.27	12.54	16.73	20.89	25.03	29.10	33.10
401 T.H.[a]	1.00	0.98	0.98	0.98	0.98	0.93	0.87	0.76	0.65
402 St.H.[b]	.15	.19	.15	.11	.14	.16	.15	.06	-.11
403 T.H.	1.00	.98	.98	.98	.98	.96	.89	.80	.73
404	- - -	- - -	- - -	- - -	- - -	- - -	- - -	- - -	- - -
405 St.H.	.19	.21	.19	.11	.12	.13	.11	.04	-.16
406 T.H.	1.00	.98	.98	.98	.98	.93	.85	.76	.65
407 T.H.	1.00	.98	.98	.98	.96	.93	.85	.73	.62
408 St.H.	.21	.23	.23	.15	.16	.20	.17	.06	-.11
409 T.H.	1.00	.98	.98	.98	.96	.93	.85	.76	.68
410 T.H.	1.00	.98	.98	.98	.98	.96	.91	.84	.76
411 St.H.	.23	.19	.17	.15	.16	.13	.11	-.02	-.19
412 T.H.	1.00	.98	.98	.98	.96	.93	.85	.71	.59
413 T.H.	1.00	.98	.98	.98	.96	.93	.89	.86	.73
414 St.H.	.21	.11	.02	.04	0	-.07	-.23	-.45	-.76
415 T.H.	1.00	.98	.98	.96	.92	.84	.72	.55	.41
416 T.H.	1.00	.98	.96	.94	.94	.87	.77	.14	.08
417 St.H.	.19	-.08	-.13	-.04	-.10	-.13	-.30	-.45	-.49
418 T.H.	1.00	.96	.92	.85	.73	.61	.51	.06	-.35
501 T.H.	.81	.79	.79	.72	.65	.59	.49	.37	.24
502 St.H.	.77	.75	.73	.68	.61	.57	.47	.35	.22
503 T.H.	.83	.81	.79	.74	.65	.59	.49	.37	.24
504 T.H.	.83	.81	.81	.74	.65	.59	.49	.37	.24
505 St.H.	.77	.75	.73	.68	.61	.54	.45	.35	.22
506 T.H.	.81	.81	.79	.74	.65	.59	.49	.39	.27
507 T.H.	.79	.79	.77	.72	.65	.59	.49	.39	.27
508 St.H.	.77	.75	.73	.66	.61	.54	.45	.35	.22
509 T.H.	.85	.81	.77	.72	.65	.61	.51	.39	.27
510 T.H.	.81	.85	.81	.74	.65	.59	.49	.37	.24
511 St.H.	.77	.75	.73	.68	.61	.54	.47	.35	.22
512 T.H.	.83	.87	.83	.77	.67	.59	.49	.37	.24
513	- - -	- - -	- - -	- - -	- - -	- - -	- - -	- - -	- - -
514 St.H.	.77	.75	.73	.68	.61	.54	.45	.35	.22
515 T.H.	.89	.94	.85	.79	.69	.61	.51	.39	.27
516 T.H.	.96	.89	.85	.77	.69	.61	.51	.39	.27
517 St.H.	.77	.75	.73	.66	.61	.54	.45	.35	.22
518	- - -	- - -	- - -	- - -	- - -	- - -	- - -	- - -	- - -
519 T.H.	.87	.89	.83	.79	.69	.61	.51	.39	.27
520 St.H.	.77	.75	.73	.68	.61	.54	.45	.41	.22
521 T.H.	.87	.81	.79	.72	.65	.59	.49	.37	.24
522 St.H.	.77	.75	.73	.66	.61	.54	.47	.35	.19
523 T.H.	.79	.75	.73	.68	.61	.54	.47	.35	.22

[a]Total-head tube (coefficient given as P_t).

[b]Static-head tube (coefficient given as P_s).

TABLE 5.- PRESSURE COEFFICIENTS FOR THE FLYING MOCK-UP OF THE XP-92 AIRPLANE, CONTROLS NEUTRAL, $\beta = -5.00^{\circ}$

(a) Wing

Orifice No. \ α	0.06	8.38	16.73	25.04	27.10	29.10	33.04
101	-0.09	0.15	0.38	0.59	0.64	0.67	0.70
102	-.04	-.25	-.53	-1.02	-.89	-1.67	-1.30
103	- - -	- - -	- - -	- - -	- - -	- - -	- - -
104	- - -	- - -	- - -	- - -	- - -	- - -	- - -
105	-.07	.23	.38	.50	.51	.52	.57
106	-.04	-.46	-1.06	-3.20	-2.87	-2.34	-1.27
107	-.04	.31	.15	-.02	-.04	-.04	.08
108	-.04	-.81	-2.02	-2.76	-2.49	-2.17	-1.24
109	-.11	.08	.28	.46	.49	.52	-.57
110	-.07	-.19	-.38	-.74	-.89	-1.00	-1.05
111	-.13	.11	.34	.50	.53	.54	.59
112	-.11	-.31	-.62	-2.50	-1.87	-1.75	-1.59
113	-.11	.23	.38	.50	.51	.52	.54
114	-.09	-.52	-1.11	-1.74	-1.72	-1.52	-1.14
115	-.04	.29	.21	.24	.21	.21	.22
116	-.07	-.88	-2.66	-1.52	-1.53	-1.38	-1.08
117	-.22	-.04	.13	.28	.32	.35	.38
118	-.09	-.17	-.30	-.67	-.74	-.65	-.95
119	-.18	0	.17	.33	.36	.40	.43
120	-.11	-.42	-.40	-.80	-.91	-.92	-1.03
121	-.18	.08	.30	.44	.45	.48	.51
122	-.13	-.31	-.60	-1.43	-1.49	-1.40	-1.11
123	-.04	.21	.36	.44	.45	.46	.46
124	-.13	-.50	-1.51	-1.28	-1.26	-1.17	-1.03
125	-.09	.27	.36	.35	.32	.33	.30
126	-.09	-.85	-2.34	-1.15	-1.15	-1.04	-.97
127	-.16	-.04	.09	.18	.21	.23	.27
128	-.13	-.19	-.51	-.67	-.68	-.63	-.81
129	-.13	-.02	.11	.22	.21	.25	.27
130	-.11	-.19	-.60	-.78	-.87	-.92	-.95
131	-.18	.02	.17	.28	.30	.31	.32
132	-.16	-.31	-.57	-1.11	-1.15	-1.08	-.97
133	-.16	.13	.28	.37	.38	.40	.41
134	-.16	-.48	-1.21	-.96	-.98	-.88	-.89
135	-.13	.25	.36	.39	.38	.40	.38
136	-.13	-.83	-1.02	-.87	-.89	-.81	-.86
137	-.04	.02	.09	.07	.13	.13	.08
138	-.04	-.06	-.13	-.41	-.40	-.50	-.70
139	-.04	.04	.11	.13	.13	.15	.11
140	-.02	-.06	-.23	-.48	-.74	-.79	-.89

TABLE 5.- CONTINUED

(a) Wing (Concluded)

Orifice No. \ α	0.06	8.38	16.73	25.04	27.10	29.10	33.04
141	-0.09	0.02	0.17	0.11	0.13	0.13	0.14
142	-.04	-.13	-.45	-.89	-.96	-.92	-.89
143	-.04	.08	.15	.22	.23	.25	.27
144	-.16	-.40	-.81	-.78	-.81	-.77	-.81
145	-.07	.19	.23	.28	.28	.27	.30
146	-.13	-.67	-.70	-.72	-.72	-.73	-.78
147	.04	.11	.15	.20	.17	.15	.22
148	-.04	-.06	-.09	-.37	-.38	-.48	-.73
149	0	.02	-.02	-.02	-.04	-.06	-.16
150	-.04	-.06	-.23	-.74	-.81	-.83	-.95
151	-.02	.29	.36	.41	.45	.42	.43
152	-.02	-.15	-.70	-.96	-.98	-.94	-.95
153	-.18	.08	.62	.67	.68	.69	.70
154	-.22	-.48	-.77	-.78	-.79	-.77	-.78
155	-.11	.25	.28	.33	.34	.33	.35
156	-.16	-.65	-.66	-.91	-.70	-.71	-.76
157	0	.04	.11	.11	.13	.11	.03
158	-.02	-.04	-.09	-.35	-.36	-.46	-.68
159	0	.06	.11	.09	.09	.06	0
160	0	-.02	-.17	-.63	-.70	-.75	-.84
161	-.02	.04	.02	.02	.02	.02	0
162	-.02	-.11	-.60	-.83	-.85	-.81	-.84
163	-.11	.06	.04	.09	.11	.13	.11
164	-.09	-.29	-.64	-.48	-.70	-.69	-.76
165	-.18	.11	.13	.20	.21	.21	.22
166	-.16	-.56	-.58	-.65	-.66	-.67	-.73
167	.13	.15	.17	.09	.09	-.02	-.32
168	.13	.15	.17	.02	0	-.15	-.59
169	.09	.11	.06	-.20	-.26	-.33	-.51
170	.11	.11	.02	-.37	-.47	-.61	-1.05
171	.09	.11	-.19	-.35	-.36	-.38	-.43
172	.11	.13	-.45	-.70	-.72	-.73	-.78
173	.11	.13	-.21	-.26	-.26	-.25	-.30
174	.09	-.02	-.51	-.61	-.62	-.63	-.70
175	-.02	-.21	-.26	-.28	-.30	-.31	-.35
176	.02	-.50	-.45	-.54	-.55	-.58	-.68

Note: A line has been drawn through the pressure coefficients for which the data are doubtful.

TABLE 5.– CONTINUED

(b) Vertical tail.

Orifice No. \ α	0.06	8.38	16.73	25.04	27.10	29.10	33.04
201	-0.59	-0.57	-0.55	-0.63	-0.72	-0.81	-0.46
202	.20	.09	-.02	-.18	-.18	-.13	-1.30
203	-.37	-.36	-.49	-.57	-.63	-.74	-.68
204	~~.20~~	~~.21~~	~~.19~~	~~.18~~	~~-.28~~	~~.13~~	~~-.05~~
205	-.24	-.32	-.36	-.50	-.54	-.62	-.76
206	~~.11~~	~~.17~~	~~.21~~	~~.22~~	~~.20~~	~~.19~~	~~.11~~
207	-.22	-.28	-.34	-.50	-.54	-.64	-.78
208	.07	-.06	-.26	-.24	-.48	-.45	-1.03
209	-.61	-.64	-.74	-.67	-.93	-1.02	-.95
210	.16	.04	-.04	-.18	.20	-.21	-.62
211	-.37	-.40	-.51	-.67	-.72	-.79	-.86
212	.04	-.04	-.11	-.26	-.30	-.30	-.89
213	-.28	-.36	-.53	-.65	-.72	-.77	-.92
214	0	-.09	-.15	-.35	-.37	-.40	-.97
215	-.22	-.26	-.36	-.54	-.61	-.66	-.78
216	~~-.04~~	~~-.13~~	~~-.26~~	~~-.44~~	~~-.44~~	~~-.45~~	~~-.92~~
217	-.70	-.70	-.81	-.98	-.98	-1.06	-1.19
218	.16	.06	-.02	-.13	-.18	-.19	-.32
219	-.33	-.34	-.43	-.61	-.65	-.72	-.92
220	-.04	-.09	-.15	-.33	-.37	-.40	-.78
221	-.28	-.34	-.49	-.65	-.74	-.79	-1.00
222	-.11	-.15	-.19	-.44	-.50	-.60	-.95
223	-.28	-.34	-.43	-.65	-.72	-.79	-.92
224	-.13	-.19	-.28	-.44	-.52	-.62	-.78
225	-.48	-.47	-.49	-.61	-.65	-.70	-.97
226	.04	.02	-.04	-.11	-.13	-.17	-.32
227	-.13	-.15	-.19	-.33	-.39	-.45	-.70
228	0	-.02	-.06	-.20	-.22	-.30	-.59
229	~~.11~~	~~.17~~	~~.21~~	~~.22~~	~~.20~~	~~.19~~	~~.11~~
230	-.02	-.04	-.09	-.26	-.33	-.45	-.76
231	-.09	-.11	-.17	-.33	-.44	-.49	-.70
232	-.04	-.06	-.13	-.33	-.44	-.51	-.68
233	-.35	-.36	-.47	-.63	-.74	-.83	-1.00
234	.02	.02	-.02	-.09	-.11	-.13	-.30
235	-.18	-.17	-.21	-.33	-.37	-.43	-.62

Note: Lines have been drawn through the pressure coefficients for which the data are doubtful.

TABLE 5.- CONTINUED

(b) Vertical tail (Concluded)

Orifice No. \ α	0.06	8.38	16.73	25.04	27.10	29.10	33.04
236	-0.04	-0.09	-0.11	-0.20	-0.22	-0.30	-0.49
237	-.04	-.04	-.11	-.24	-.30	-.38	-.65
238	.04	.02	-.02	-.18	-.24	-.34	-.70
239	-.02	-.06	-.13	-.28	-.35	-.43	-.65
240	-.02	.04	-.11	-.30	-.39	-.47	-.65
241	-.22	-.26	-.34	-.48	-.57	-.68	-.84
242	0	-.02	-.04	-.11	-.16	-.38	-.35
243	-.11	-.11	-.15	-.24	-.28	-.34	-.51
244	.02	-.02	-.09	-.16	-.20	-.23	-.43
245	-.02	-.02	-.06	-.22	-.28	-.34	-.62
246	.04	.02	.02	-.18	-.22	-.23	-.68
247	-.02	-.02	-.09	-.24	-.30	-.45	-.62
248	0	.02	-.04	-.24	-.30	-.32	-.62
249	-.33	-.21	-.23	-.37	-.46	-.38	-.83
250	-.09	-.11	-.15	-.22	-.26	-.40	-.46
251	.04	.02	0	-.11	-.13	-.55	-.43
252	.09	.06	.04	-.04	-.09	-.30	-.41
253	.04	.04	0	-.13	-.18	-.19	-.57
254	.11	.09	.04	-.07	-.11	-.13	-.54
255	.02	.02	0	-.16	-.22	-.26	-.59
256	.07	.09	.02	-.13	-.20	-.21	-.57

TABLE 5.-CONTINUED

(c) Fuselage

Orifice No. \ α	0.06	8.38	16.73	25.04	27.10	29.10	33.04
301	0.22	0	-0.22	-0.91	-1.07	-1.11	-1.17
302	.35	.16	-.16	-.61	-.72	-.81	-.97
303	.39	.33	.13	-.18	-.30	-.38	-.58
304	.35	.50	.57	.59	.57	.57	.56
305	.24	.44	.59	.80	.78	.83	.89
306	~~.11~~	~~.20~~	~~.18~~	~~.09~~	~~.07~~	~~.04~~	~~-.03~~
307	.13	.09	-.09	-.39	-.48	-.51	-.67
308	.18	0	-.24	-1.13	-1.15	-1.11	-1.08
309	.07	-.04	-.13	-.20	-.20	-.21	-.25
310	.16	-.02	-.24	-.50	-.61	-.66	-.83
311	.20	.09	-.13	-.48	-.61	-.70	-.94
312	.16	.26	.30	.28	.24	.26	.19
313	.07	.20	.30	.41	.48	.49	.56
314	.04	.04	-.07	-.22	-.28	-.34	-.44
315	.02	-.02	-.22	-.52	-.65	-.72	-.92
316	.04	-.02	-.18	-.35	-.44	-.47	-.58
317	.09	-.07	-.26	-.54	-.63	-.70	-.86
318	.07	0	-.18	-.48	-.61	-.68	-.92
319	.04	.13	.16	.13	.11	.11	.06
320	-.02	.11	.26	.44	.50	.53	.64
321	-.07	-.04	-.09	-.22	-.24	-.28	-.36
322	-.09	-.13	-.28	-.59	-.70	-.77	-.97
323	-.07	-.11	-.24	-.39	-.46	-.45	-.53
324	-.11	-.20	-.33	-.48	-.52	-.53	-.56
325	-.11	0	.16	.30	.37	.40	.50
326	-.13	-.16	-.22	-.33	-.37	-.40	-.50
327	-.33	-.44	-.50	-.57	-.57	-.57	-.58
328	-.09	-.26	-.48	-.76	-.85	-.89	-.89
329	-.09	.02	.13	.13	.35	.38	.47
330	-.04	-.07	-.13	-.26	-.30	-.32	-.39
331	0	-.11	-.16	-.20	-.22	-.23	-.36
332	-.07	-.16	-.28	-.67	-.93	-1.17	-1.14
333	-.22	-.11	.04	.20	.24	.28	.33
334	-.16	-.02	.13	.26	.30	.32	.36
335	-.11	-.18	-.26	-.87	-.78	-.87	-1.03
336	-.07	-.11	-.20	-.54	-.65	-.77	-.94
337	-.18	-.09	0	.11	.16	.15	.17
338	-.13	-.04	.07	.18	.20	.21	.22
339	-.04	-.09	-.18	-.39	-.52	-.64	-.86
340	~~2.35~~	~~2.35~~	~~2.31~~	~~2.28~~	~~2.26~~	~~2.28~~	~~2.75~~

Note: Lines have been drawn through the pressure coefficients for which the data are doubtful.

TABLE 5.– CONTINUED

(c) Fuselage (Concluded)

Orifice No. \ α	0.06	8.38	16.73	25.04	27.10	29.10	33.04
341	-0.04	0.02	0.07	0.13	0.09	0.13	0.11
342	0	.07	.13	.18	.18	.17	.17
343	-.16	-.22	-.30	-.46	-.54	-.62	-.78
344	-.11	-.13	-.20	-.35	-.46	-.53	-.78
345	-.02	.04	.09	.11	.11	2.21	0
346	-.02	.04	.07	.11	.11	2.21	0
347	.02	.04	.09	.11	.13	2.26	.06
348	.04	.09	.13	.16	.16	.15	.11
349	.04	.09	.13	.16	.16	.15	.08
350	.04	.04	.04	-.07	-.09	-.15	-.53
351	.02	.04	.02	-.04	-.11	-.17	-.50
352	.07	.09	.09	.07	.04	-.02	-.33
353	-.02	0	.04	.09	.07	.06	-.02
354	.04	.07	.09	.09	.04	.02	-.14
355	.04	.04	.02	-.04	-.07	-.09	-.28
356	.04	.04	.02	-.04	-.07	-.11	-.33
357	.04	.04	.02	-.11	-.13	-.19	-.47
358	~~.35~~	~~.39~~	~~.33~~	~~.24~~	~~.20~~	~~.17~~	~~.03~~
359	.07	.07	.04	-.02	-.04	-.06	-.19
360	.02	0	-.02	-.04	-.11	-.17	-.44
361	-.07	-.11	-.16	-.20	-.24	-.30	-.44
362	0	-.02	-.07	-.13	-.20	-.26	-.50
363	.04	.04	0	-.04	-.07	-.11	-.33
364	.09	.09	.07	-.04	-.07	-.11	-.28
365	.11	.11	.09	.07	.07	.02	-.19
366	-.02	-.13	-.26	-.57	-.70	-1.00	-1.22
367	-.09	.07	.20	.35	.39	.40	.44
368	-.11	.04	.18	.35	.39	.43	.47
369	.07	.13	.18	.22	.22	.21	.17
370	.04	.13	.18	.22	.22	.21	.17
371	.11	.18	.20	.22	.20	.19	.11
372	.11	.18	.20	.22	.20	.19	.11

Note: A line has been drawn through the pressure coefficients for which the data are doubtful.

TABLE 5.– CONCLUDED

(d) Fuselage-duct rakes

Tube No. \ α	0.06	8.38	16.73	25.04	27.10	29.10	33.04
401 T.H.[a]	0.90	0.96	0.94	0.87	0.84	0.79	0.68
402 St.H.[b]	-.16	-.23	-.15	-.18	-.16	-.19	-.51
403 T.H.	.92	.98	.94	.84	.80	.75	.62
404	—	—	—	—	—	—	—
405 St.H.	.02	.04	.02	0	-.04	-.06	-.30
406 T.H.	.94	.98	.94	.82	.76	.69	.54
407 T.H.	.94	.98	.94	.82	.76	.71	.57
408 St.H.	.14	.15	.15	.13	.09	0	-.24
409 T.H.	.94	.98	.96	.84	.78	.73	.62
410 T.H.	.94	.98	.96	.89	.84	.79	.70
411 St.H.	.16	.11	.11	.04	-.02	-.06	-.30
412 T.H.	.94	.98	.94	.80	.76	.69	.51
413 T.H.	.94	.98	.94	.87	.87	.85	.89
414 St.H.	.14	-.02	-.06	-.33	-.22	-.56	-1.03
415 T.H.	.94	.98	.89	.70	.61	.50	.89
416 T.H.	.94	.96	.85	.80	.41	.23	-.19
417 St.H.	.12	-.19	-.15	-.44	-.52	-.48	-.65
418 T.H.	.94	.91	.72	.50	.35	.06	-.54
501 T.H.	.76	.79	.62	.48	.41	.35	.19
502 St.H.	.71	.72	.60	.46	.39	.33	.16
503 T.H.	.76	.81	.62	.48	.41	.37	.19
504 T.H.	.78	.81	.64	.48	.41	.37	.19
505 St.H.	.71	.72	.60	.44	.39	.33	.16
506 T.H.	.76	.81	.62	.48	.41	.37	.19
507 T.H.	.73	.79	.64	.48	.43	.37	.19
508 St.H.	.71	.70	.57	.44	.39	.33	.16
509 T.H.	.76	.74	.64	.48	.43	.37	.19
510 T.H.	.73	.81	.66	.48	.43	.37	.19
511 St.H.	.71	.72	.60	.46	.63	.33	.16
512 T.H.	.78	.85	.68	.50	.46	.39	.22
513	—	—	—	—	—	—	—
514 St.H.	.71	.72	.60	.46	.63	.35	.16
515 T.H.	.82	.85	.70	.52	.46	.39	.22
516 T.H.	.86	.83	.70	.52	.46	.39	.22
517 St.H.	.69	.70	.57	.44	.63	.33	.16
518	—	—	—	—	—	—	—
519 T.H.	.80	.85	.70	.52	.46	.39	.22
520 St.H.	.69	.72	.57	.44	.63	.35	.16
521 T.H.	.80	.79	.66	.48	.41	.35	.16
522 St.H.	.69	.70	.57	.44	.63	.40	.16
523 T.H.	.71	.70	.60	.43	.37	.33	.14

[a]Total-head tube (coefficient given as P_t).

[b]Static-head tube (coefficient given as P_s).

TABLE 6.– PRESSURE COEFFICIENTS FOR THE FLYING MOCK-UP OF THE XP-92 AIRPLANE, CONTROLS NEUTRAL, $\beta = 5.00^{\circ}$

(a) Wing

Orifice No. \ α	0.06	8.38	16.73	25.04	27.10	29.10	33.04
101	-0.06	0.15	0.38	0.57	0.62	0.62	0.71
102	-.06	-.23	-.55	-.83	-1.00	-1.21	-1.53
103	- - -	- - -	- - -	- - -	- - -	- - -	- - -
104	- - -	- - -	- - -	- - -	- - -	- - -	- - -
105	-.04	.17	.28	.32	.32	.30	.34
106	-.06	-.40	-1.11	-4.00	-3.56	-3.21	-2.58
107	0	.17	-.09	-.36	-.40	-2.55	-.45
108	-.09	-.79	-3.31	-3.23	-2.96	-2.73	-2.21
109	-.09	.09	.26	.38	.40	.40	.47
110	-.13	-.28	-.23	-.72	-.81	-.85	-.97
111	-.09	.11	.30	.45	.47	.47	.53
112	-.15	-.13	-.60	-1.47	-1.74	-1.85	-1.71
113	-.06	.15	.28	.32	.34	.32	.34
114	-.13	-.51	-3.04	-2.41	-2.38	-1.98	-1.68
115	-.02	.15	.04	-.09	-.11	-.13	-.13
116	-.13	-.89	-2.48	-1.94	-2.04	-1.68	-1.45
117	-.17	-.04	.11	.23	.26	.28	.34
118	-.17	-.28	-.44	-.68	-.68	-.72	-.82
119	-.13	.02	.20	.34	.38	.38	.45
120	-.19	-.30	-.50	-.83	-.94	-.98	-1.11
121	-.11	.09	.26	.38	.43	.40	.47
122	-.17	-.36	-.46	-1.55	-1.53	-1.53	-1.42
123	-.04	.11	.22	.26	.28	.26	.29
124	-.15	-.53	-2.96	-1.51	-1.60	-1.49	-1.34
125	-.06	.15	.37	.28	.06	.02	0
126	-.15	-.89	-1.70	-1.45	-1.36	-1.28	-1.18
127	-.11	.02	.09	.17	.21	.21	.24
128	-.21	-.28	-.44	-.57	-.62	-.70	-.82
129	-.09	.02	.13	.23	.26	.26	.29
130	-.17	-.26	-.44	-.74	-.79	-.91	-.74
131	-.11	.04	.16	.02	.28	.26	.29
132	-.17	-.34	-.59	-1.17	-1.19	-1.23	-1.18
133	-.11	.11	.22	.26	.28	.26	.29
134	-.17	-.49	-1.48	-1.23	-1.15	-1.15	-1.11
135	-.06	.17	.22	.19	.19	.15	.16
136	-.15	-1.19	-1.11	-1.04	-.96	-1.02	-1.00
137	0	.04	.11	.15	.17	.15	.13
138	-.09	-.13	-.20	-.32	-.38	-.49	-.66
139	0	.06	.13	.17	.17	.15	.16
140	-.06	-.11	-.20	-.51	-.60	-.70	-.87

TABLE 6.- CONTINUED

(a) Wing (Concluded)

Orifice No. \ α	0.06	8.38	16.73	25.04	27.10	29.10	33.04
141	-0.04	0.04	0.11	0.13	0.13	0.11	0.13
142	-.06	.13	-.33	-.91	-.94	-1.00	-1.03
143	-.04	.06	.13	.15	.15	.15	.18
144	-.15	-.34	-.96	-.91	-.89	-.91	-.95
145	-.04	.11	.16	.15	.13	.13	.16
146	-.13	-1.13	-.78	-.79	-.79	-.62	-.87
147	.09	.17	.22	.19	.23	.34	.61
148	-.06	-.13	-.20	-.28	-.34	-.45	-.61
149	~~.02~~	~~.02~~	~~.22~~	~~.02~~	~~-.04~~	~~-.09~~	~~-.13~~
150	-.06	-.11	-.20	-.53	-.66	-.79	-.92
151	.02	.30	.41	.43	.43	.40	.45
152	-.02	-.17	-.61	-1.04	-1.04	-1.09	-1.08
153	-.19	-.04	.57	.55	.55	.32	.55
154	-.21	-.43	-.87	-.87	-.87	-.94	-.95
155	-.02	.23	.24	.21	.21	.17	.18
156	-.17	-.91	-.80	-.77	-.79	-.83	-.87
157	.04	.09	.16	.19	.21	.15	.13
158	-.04	-.06	-.16	-.23	-.51	-.40	-.58
159	.02	.09	.13	.15	.13	-.32	.08
160	-.02	-.04	-.13	-.43	-.53	-.66	-.76
161	-.02	.04	.04	.04	.04	.02	.03
162	-.04	-.11	-.52	-.89	-.91	-.96	-.68
163	-.06	.04	.04	.28	.06	.04	.05
164	-.09	-.30	-.78	-.77	-.77	-.81	-.58
165	-.11	.09	.09	.11	.11	.09	.11
166	-.15	-.64	-.63	-.68	-.72	-.77	-.82
167	.13	.15	.18	.19	.17	.13	0
168	.13	.11	.13	.13	.11	.02	-.18
169	.11	.11	.09	-.02	-.09	-.17	-.34
170	.11	.11	.07	-.13	-.23	-.36	-.61
171	.11	-.09	-.09	-.36	-.40	-.43	-.50
172	.11	.06	-.30	-.68	-.70	-.79	-.87
173	.11	.04	-.18	-.23	-.26	-.30	-.34
174	.09	-.19	-.52	-.51	-.66	-.72	-.79
175	0	-.17	-.22	-.30	-.34	-.38	-.42
176	.06	-.43	-.41	-.53	-.60	-.66	-.74

Note: A line has been drawn through the pressure coefficients for which the data are doubtful.

TABLE 6.– CONTINUED

(b) Vertical tail

Orifice No. \ α	0.06	8.38	16.73	25.04	27.10	29.10	33.04
201	0.19	0.09	-0.02	-0.13	-0.13	-0.11	-0.76
202	-.61	-.57	-.57	-.68	-.79	-.96	-.71
203	.13	.02	-.09	-.23	-.26	-.23	-.97
204	~~.13~~	~~.15~~	~~.15~~	~~.13~~	~~.11~~	~~.06~~	~~.03~~
205	.11	0	-.17	-.36	-.36	-.38	-1.00
206	~~.11~~	~~.17~~	~~.21~~	~~.21~~	~~.21~~	~~.19~~	~~.13~~
207	.09	-.04	-.21	-.40	-.40	-.40	-.92
208	-.24	-.30	-.34	-.51	-.60	-.68	-.76
209	.13	.02	-.06	-.21	-.21	-.26	-.47
210	-.57	-.62	-.72	-.83	-.85	-.89	-.89
211	.04	-.02	-.11	-.26	-.30	-.34	-.71
212	-.37	-.40	-.51	-.66	-.72	-.77	-.82
213	-.02	-.09	-.19	-.34	-.38	-.45	-.92
214	-.28	-.34	-.49	-.62	-.68	-.72	-.89
215	.02	-.06	-.21	-.13	-.34	-.36	-.79
216	~~-.28~~	~~-.36~~	~~-.47~~	~~-.64~~	~~-.72~~	~~-.77~~	~~-.92~~
217	.16	.06	-.02	-.13	-.15	-.19	-.32
218	-.63	-.66	-.77	-.87	-.89	-.94	-1.03
219	-.07	-.09	-.17	-.30	-.36	-.45	-.71
220	-.30	-.34	-.43	-.36	-.64	-.70	-.87
221	-.13	-.17	-.26	-.45	-.53	-.64	-.95
222	-.28	-.34	-.43	-.62	-.70	-.77	-.97
223	-.13	-.17	-.28	-.40	-.49	-.62	-.79
224	-.28	-.34	-.45	-.45	-.72	-.81	-.95
225	0	-.02	-.06	-.13	-.17	-.19	-.34
226	-.44	-.43	-.47	-.57	-.60	-.64	-.79
227	-.02	-.04	-.09	-.19	-.21	-.30	-.53
228	-.13	-.16	-.19	-.32	-.36	-.40	-.61
229	~~.11~~	~~.17~~	~~.21~~	~~.21~~	~~.21~~	~~.19~~	~~.13~~
230	-.09	-.11	-.17	-.36	-.38	-.45	-.66
231	-.04	-.06	-.11	-.32	-.38	-.49	-.66
232	-.09	-.11	-.17	-.34	-.40	-.49	-.68
233	.04	.02	-.02	-.06	-.09	-.13	-.26
234	-.37	-.34	-.40	-.47	-.51	-.55	-.76
235	.02	.02	-.04	-.13	-.15	-.19	-.39

Note: Lines have been drawn through the pressure coefficients for which the data are doubtful.

TABLE 6.– CONTINUED

(b) Vertical tail (Concluded)

Orifice No. \ α	0.06	8.38	16.73	25.04	27.10	29.10	33.04
236	−0.24	−0.26	−0.30	−0.40	−0.43	−0.49	−0.66
237	.02	.02	−.04	−.17	−.23	−.32	−.63
238	−.02	−.04	−.09	−.23	−.28	−.36	−.55
239	−.02	−.02	−.06	−.28	−.32	−.43	−.58
240	−.07	−.09	−.15	−.30	−.36	−.43	−.63
241	−.02	−.02	−.09	−.13	−.15	−.19	−.32
242	−.20	−.23	−.28	−.36	−.38	−.43	−.68
243	.02	.02	−.02	−.11	−.13	−.19	−.37
244	−.13	−.13	−.17	−.26	−.30	−.34	−.50
245	.02	.02	−.02	−.17	−.23	−.32	−.61
246	0	−.02	−.06	−.19	−.26	−.32	−.53
247	0	0	−.02	−.23	−.30	−.38	−.55
248	−.02	0	−.09	−.23	−.30	−.36	−.55
249	−.07	−.09	−.13	−.19	−.21	−.19	−.37
250	−.52	−.26	−.28	−.51	−.55	−.49	−.66
251	.07	.04	0	−.06	−.11	−.15	−.34
252	.04	.04	.02	−.09	−.11	−.17	−.37
253	.07	.04	.02	−.11	−.17	−.23	−.50
254	.09	.06	.02	−.09	−.13	−.19	−.42
255	.04	.04	0	−.15	−.21	−.30	−.50
256	.07	.06	.02	−.13	−.17	−.26	−.45

TABLE 6.– CONTINUED

(c) Fuselage

Orifice No. \ α	0.06	8.38	16.73	25.04	27.10	29.10	33.04
301	0.22	0.02	-0.23	-0.93	-1.07	-1.13	-1.18
302	.16	0	-.26	-1.00	-1.11	-1.07	-1.08
303	.11	.04	-.17	-.48	-.57	-.61	-.74
304	.16	.24	.23	.20	.18	.18	.11
305	.24	.44	.60	.78	.83	.20	.89
306	~~.26~~	~~.39~~	~~.43~~	~~.39~~	~~.39~~	~~.35~~	~~.32~~
307	.41	.37	.19	-.09	-.20	-.28	-.45
308	.35	.13	-.19	-.63	-.80	-.93	-1.18
309	.11	-.04	-.17	-.28	-.30	-.35	-.42
310	.04	-.04	-.17	-.33	-.37	-.41	-.47
311	.02	-.04	-.26	-.59	-.70	-.78	-.97
312	.02	.04	-.02	-.13	-.18	-.20	-.29
313	.11	.26	.43	.59	.63	.67	.71
314	.18	.26	.26	.18	.16	.09	0
315	.22	.16	0	-.33	-.44	-.54	-.76
316	.20	.02	-.21	-.52	-.63	-.72	-.92
317	-.04	-.09	-.19	-.37	-.41	-.44	-.50
318	-.07	-.13	-.32	-.63	-.74	-.83	-1.00
319	-.07	-.07	-.13	-.26	-.30	-.30	-.42
320	-.04	.02	.17	.30	.35	.39	.45
321	.04	.13	.19	.18	.16	.16	.08
322	.07	.04	-.09	-.37	-.46	-.57	-.74
323	.07	-.09	-.30	-.57	-.65	-.72	-.89
324	-.22	-.24	-.30	-.46	-.50	-.52	-.63
325	-.13	-.04	.02	.13	.18	.22	.26
326	-.09	0	.04	.02	.02	0	.03
327	-.33	-.44	-.49	-.54	-.57	-.57	-.58
328	-.02	-.13	-.32	-.59	-.65	-.70	-.82
329	-.07	.02	.15	.30	.35	.39	.47
330	-.04	.07	.11	.09	.09	.09	.11
331	0	-.13	-.21	-.22	-.24	-.26	-.39
332	-.22	-.30	-.47	-.74	-.85	-.96	-1.21
333	-.22	-.09	.04	.18	.24	.26	.29
334	-.18	-.02	.15	.28	.35	.35	.39
335	-.22	-.28	-.40	-.65	-.72	-.83	-1.03
336	-.13	-.18	-.26	-.46	-.54	-.65	-.87
337	-.18	-.09	.02	.13	.16	.18	.18
338	-.18	-.07	.04	.16	.18	.20	.21
339	-.09	-.11	-.19	-.35	-.44	-.52	-.74
340	~~-2.39~~	~~2.39~~	~~2.34~~	~~2.33~~	~~2.33~~	~~2.33~~	~~2.68~~

Note: Lines have been drawn through the pressure coefficients for which the data are doubtful.

TABLE 6.– CONTINUED

(c) Fuselage (Concluded)

Orifice No. \ α	0.06	8.38	16.73	25.04	27.10	29.10	33.04
341	-0.04	0.02	0.06	0.11	0.16	0.13	0.11
342	-.04	.02	.09	.13	.16	.13	.13
343	-.16	-.16	-.23	-.61	-.65	-.72	-.79
344	-.07	-.09	-.19	-.39	-.48	-.63	-.84
345	.02	.07	.09	.13	.16	.13	.05
346	.02	.07	.11	.16	.16	.16	.11
347	.02	.04	.09	.11	.16	.13	.08
348	0	.07	.09	.13	.13	.13	.05
349	0	.04	.11	.11	.13	.11	.05
350	.04	.04	.02	-.04	-.07	-.11	-.26
351	.04	.04	.02	-.07	-.07	-.11	-.24
352	.04	.04	.06	.07	.04	.02	-.16
353	.11	.18	.17	.20	.20	.16	.05
354	.09	.11	.11	.09	.09	.02	-.16
355	.04	.04	.02	-.04	-.09	-.16	-.32
356	.04	.04	.02	-.07	-.09	-.16	-.29
357	.04	.04	0	-.11	-.13	-.18	-.32
358	~~.35~~	~~.37~~	~~.32~~	~~.24~~	~~.22~~	~~.18~~	~~.05~~
359	.04	.04	.02	-.04	-.07	-.11	-.24
360	0	-.02	-.02	-.07	-.11	-.18	-.34
361	-.11	-.18	-.17	-.28	-.30	-.33	-.42
362	-.02	-.02	-.06	-.11	-.16	-.26	-.45
363	.04	.04	.02	-.04	-.28	-.11	-.18
364	.09	.09	.09	.04	.02	-.02	-.16
365	.11	.11	.09	.09	.07	.02	-.11
366	-.16	-.26	-.47	-.93	-1.11	-1.22	-1.42
367	-.09	.07	.23	.41	.44	.48	.50
368	-.11	.02	.19	.35	.50	.44	.47
369	.04	.13	.19	.22	.22	.22	.18
370	.07	.13	.19	.22	.22	.22	.18
371	.11	.18	.21	.22	.22	.18	.11
372	.11	.18	.21	.22	.22	.18	.11

Note: A line has been drawn through the pressure coefficients for which the data are doubtful.

TABLE 6.- CONCLUDED

(d) Fuselage-duct rakes

Tube No. \ α	0.06	8.38	16.73	25.04	27.10	29.10	33.04
401 T.H.[a]	1.00	0.98	0.96	0.80	0.70	0.53	0.50
402 St.H.[b]	.35	.34	.28	.22	.21	.21	.08
403 T.H.	1.00	.98	.98	.87	.83	.79	.68
404	- - -	- - -	- - -	- - -	- - -	- - -	- - -
405 St.H.	.26	.23	.15	.11	.09	.04	-.08
406 T.H.	1.00	.98	.98	.87	.81	.77	.66
407 T.H.	1.00	.98	.96	.84	.79	.74	.61
408 St.H.	.22	.19	.13	.16	.13	.09	-.08
409 T.H.	.84	.98	.96	.87	.81	.77	.66
410 T.H.	1.00	.98	.98	.91	.87	.74	.74
411 St.H.	.18	.11	.09	.02	-.02	-.04	-1.03
412 T.H.	1.00	.98	.96	.84	.77	.70	.55
413 T.H.	1.00	.98	.96	.84	.79	.72	.42
414 St.H.	.16	-.04	-.06	-.16	-.32	-.45	-.76
415 T.H.	1.00	.98	.89	.72	.62	.53	.29
416 T.H.	1.00	.96	.77	.56	.40	.15	-.05
417 St.H.	.11	-.23	-.23	-.39	-.47	-.49	-.58
418 T.H.	1.00	.94	.68	.50	.32	-.02	-.47
501 T.H.	.80	.77	.60	.46	.38	.32	.18
502 St.H.	.76	.70	.57	.44	.38	.32	.18
503 T.H.	.80	.79	.62	.46	.40	.34	.18
504 T.H.	.80	.79	.62	.46	.40	.34	.21
505 St.H.	.74	.70	.57	.44	.38	.32	.18
506 T.H.	.80	.79	.62	.46	.40	.36	.21
507 T.H.	.78	.74	.62	.43	.43	.36	.21
508 St.H.	.74	.70	.57	.44	.36	.32	.18
509 T.H.	.82	.77	.64	.48	.43	.36	.24
510 T.H.	.80	.77	.60	.43	.38	.32	.18
511 St.H.	.76	.70	.60	.44	.38	.32	.18
512 T.H.	.82	.77	.62	.52	.38	.32	.18
513	- - -	- - -	- - -	- - -	- - -	- - -	- - -
514 St.H.	.74	.70	.57	.44	.38	.32	.16
515 T.H.	.84	.81	.64	.52	.45	.34	.18
516 T.H.	.89	.79	.64	.52	.40	.34	.18
517 St.H.	.74	.70	.57	.44	.38	.32	.18
518	- - -	- - -	- - -	- - -	- - -	- - -	- - -
519 T.H.	.84	.81	.62	.52	.38	.34	.18
520 St.H.	.74	.70	.57	.44	.38	.32	.18
521 T.H.	.80	.74	.60	.43	.38	.34	.18
522 St.H.	.74	.70	.57	.44	.38	.32	.18
523 T.H.	.74	.70	.57	.41	.36	.30	.16

[a]Total-head tube (coefficient given as P_t).

[b]Static-head tube (coefficient given as P_s).

TABLE 7.– PRESSURE COEFFICIENTS FOR THE FLYING MOCK-UP OF THE XP-92 AIRPLANE. CONTROLS NEUTRAL, $\beta = -10.06^{\circ}$

(a) Wing

Orifice No. \ α	0.09	8.38	16.72	25.03	27.08	29.03	33.05
101	-0.09	0.17	0.39	0.61	0.64	0.65	0.69
102	-.09	-.25	-.51	-1.04	-1.28	-1.33	-1.10
103	- - -	- - -	- - -	- - -	- - -	- - -	- - -
104	- - -	- - -	- - -	- - -	- - -	- - -	- - -
105	-.06	.27	.65	.59	.60	.61	.64
106	-.02	-.46	-.55	-2.81	-2.30	-1.33	-1.10
107	-.02	.40	.31	.16	.17	.23	.23
108	-.02	-.85	-1.80	-2.48	-2.09	-1.36	-1.08
109	-.09	.08	.29	.46	.49	.52	.56
110	0	-.17	-.35	-.78	-1.00	-1.21	-1.03
111	-.11	.13	.37	.52	.55	.56	.62
112	-.06	-.29	-.55	-1.70	-1.64	-1.29	-1.05
113	-.09	.25	.45	.59	.60	.58	.62
114	-.06	-.52	-1.04	-1.57	-1.45	-1.19	-1.03
115	-.04	.38	.35	.39	.38	.38	.36
116	-.02	-.92	-2.14	-1.41	-1.36	-1.13	-1.00
117	-.19	-.02	.14	.30	.34	.35	.38
118	0	-.13	-.25	-.67	-.79	-.75	-.95
119	-.17	.02	.18	.33	.36	.38	.44
120	-.04	-.17	-.35	-.87	-1.00	-.94	-.95
121	-.17	.08	.31	.44	.47	.50	.51
122	-.09	-.29	-.55	-1.33	-1.32	-1.11	-.92
123	-.02	.25	.43	.52	.53	.52	.54
124	-.09	-.52	-1.27	-1.15	-1.15	-.94	-.92
125	-.09	.33	.47	.48	.47	.46	.44
126	-.04	-.88	-2.51	-1.07	-1.04	-.85	-.90
127	-.15	-.04	.08	.18	.21	.21	.23
128	-.06	-.13	-.23	-.65	-.64	-.67	-.79
129	-.13	-.02	.11	.22	.23	.23	.26
130	-.06	-.04	-.35	-.83	-.89	-.88	-.87
131	-.19	0	.17	.28	.30	.31	.33
132	-.13	-.29	-.53	-1.02	-1.04	-.90	-.87
133	-.17	.13	.31	.39	.43	.42	.46
134	-.13	-.90	-1.20	-.89	-.89	-.77	-1.08
135	-.15	.29	.43	.48	.49	.46	.46
136	-.11	-1.02	-1.04	-.85	-.83	-.75	-.79
137	-.04	.02	.08	.09	.11	.08	.05
138	-.11	-.04	-.08	-.41	-.47	-.56	-.74
139	-.04	.04	.10	.13	.13	.13	.10
140	0	-.04	-.21	-.72	-.77	-.79	-.74

TABLE 7.– CONTINUED

(a) Wing (Concluded)

Orifice No. \ α	0.09	8.38	16.72	25.03	27.08	29.03	33.05
141	-0.06	0.04	0.08	0.11	0.15	0.13	0.13
142	-.04	-.11	-.41	-.87	-.89	-.81	-.79
143	-.09	.11	.16	.24	.28	.27	.28
144	-.15	-.40	-.80	-.74	-.74	-.69	-.74
145	-.09	.21	.27	.33	.34	.33	.33
146	-.13	-.88	-.74	-.70	-.70	-.69	-.72
147	.04	.11	.16	.16	.15	.11	.18
148	-.02	-.02	-.06	-.39	-.45	-.56	-.79
149	~~0~~	~~.02~~	~~-.02~~	~~-.04~~	~~-.04~~	~~-.08~~	~~-.13~~
150	0	-.04	-.22	-.76	-.83	-.83	-.87
151	-.02	.31	.39	.44	.45	.44	.46
152	.04	-.15	-.67	-.89	-.89	-.83	-1.08
153	-.19	.23	.65	.70	.72	.71	.72
154	-.21	-.50	-.73	-.74	-.74	-.71	-.77
155	-.13	.31	.33	.39	.40	.40	.38
156	-.15	-.73	-.63	-.67	-.66	-.67	-.72
157	0	.06	.10	.09	.26	.02	0
158	.02	-.02	-.04	-.35	-.62	-.52	-.74
159	0	.08	.10	.07	.06	.02	0
160	.02	0	-.14	-.67	-.72	-.75	-.77
161	-.04	.06	.04	.02	.04	.02	.03
162	0	-.08	-.57	-.78	-.68	-.73	-.77
163	-.13	.06	.06	.13	.15	.13	.13
164	-.06	-.31	-.61	-.65	-.60	-.65	-.72
165	-.19	.13	.16	.24	.26	.25	.26
166	-.15	-.54	-.55	-.61	-.53	-.63	-.72
167	.11	.15	.16	.02	.06	-.19	-.38
168	.13	.17	.16	-.07	-.13	-.38	-.67
169	.11	.11	.06	-.26	-.32	-.42	-.51
170	.13	.13	.04	-.48	-.57	-.71	-.77
171	.11	.11	.18	-.33	-.34	-.38	-.41
172	.11	.08	-.47	-.67	-.68	-.69	-.74
173	.09	.08	-.20	-.24	-.23	-.25	-.31
174	.09	-.02	-.51	-.57	-.60	-.61	-.72
175	-.02	-.15	-.22	-.24	-.26	-.25	-.33
176	.04	-.44	-.41	-.50	-.51	-.50	-.69

Note: A line has been drawn through the pressure coefficients for which the data are doubtful.

TABLE 7.– CONTINUED

(b) Vertical tail

Orifice No. \ α	0.09	8.38	16.72	25.03	27.08	29.03	33.05
201	-1.40	-1.19	-1.02	-1.04	-1.24	-0.77	-0.69
202	.13	.02	-.06	.02	.02	-.35	-1.51
203	-.70	-.65	-.65	-.76	-.81	-.75	-.59
204	~~.17~~	~~.21~~	~~.18~~	~~.16~~	~~.13~~	~~.06~~	~~-.08~~
205	-.40	-.46	-.51	-.63	-.66	-.89	-.62
206	~~.09~~	~~.15~~	~~.16~~	~~.18~~	~~.17~~	~~.13~~	~~.08~~
207	-.38	-.44	-.49	-.61	-.66	-.66	-.64
208	.21	.06	-.24	-.78	-.83	-.74	-1.05
209	-1.26	-1.23	-1.78	-1.70	-1.62	-1.38	-.95
210	.17	.02	-.14	-.28	-.28	-.19	-.79
211	-.60	-.65	-.75	-.91	-.96	-.96	-.87
212	.17	.08	0	-.13	-.15	-.34	-.90
213	-.43	-.48	-.65	-.80	-.91	-.89	-.90
214	.11	.04	0	-.22	-.26	-.62	-.92
215	-.30	-.40	-.49	-.67	-.72	-.77	-.77
216	~~.06~~	~~0~~	~~-.18~~	~~-.63~~	~~-.66~~	~~-.68~~	~~-.90~~
217	-1.53	-2.25	-1.82	-2.26	-2.63	-3.15	-1.64
218	.17	.06	-.04	-.16	-.17	-.21	-.49
219	-.43	-.50	-.41	-.78	-.85	-.94	-1.00
220	.06	.02	-.02	-.18	-.21	-1.00	-.79
221	-.36	-.44	-.41	-.76	-.83	-.91	-.97
222	0	-.04	-.29	-.33	-.40	-.64	-.85
223	-.34	-.42	-.53	-.76	-.81	-.89	-.92
224	-.02	-.08	-.18	-.39	-.40	-.60	-.77
225	-.94	-1.06	-.73	-.96	-1.06	-1.26	-1.08
226	.13	.08	.02	-.04	-.06	-.13	-.36
227	-.21	-.21	-.20	-.37	-.43	-.55	-.77
228	.04	.02	-.02	-.13	-.17	-.32	-.67
229	~~.09~~	~~.15~~	~~.16~~	~~.18~~	~~.18~~	~~.15~~	~~.08~~
230	.02	0	-.04	-.22	-.30	-.53	-.77
231	-.11	-.15	-.20	-.37	-.43	-.55	-.69
232	0	-.02	-.08	-.33	-.40	-.51	-.69
233	-.68	-.67	-.59	-.76	-.81	-.94	-.95
234	.11	.06	0	-.07	-.06	-.13	-.36
235	-.19	-.23	-.51	-.61	-.68	-.62	-.85

Note: Lines have been drawn through the pressure coefficients for which the data are doubtful.

TABLE 7.– CONTINUED

(b) Vertical tail (Concluded)

Orifice No. \ α	0.09	8.38	16.72	25.03	27.08	29.03	33.05
236	0	-0.04	-0.16	-0.22	-0.19	-0.30	-0.49
237	-.09	-.11	-.14	-.28	-.34	-.45	-.67
238	.06	.06	.02	-.13	-.21	-.47	-.74
239	-.06	-.08	-.12	-.28	-.13	-.49	-.67
240	-.02	-.02	-.06	-.30	-.38	-.49	-.69
241	-.57	-.54	-.53	-.67	-.72	-.83	-.90
242	.02	-.02	-.06	-.13	-.15	-.21	-.38
243	-.13	-.15	-.39	-.48	-.51	-.51	-.77
244	.02	-.04	-.10	-.18	-.19	-.26	-.54
245	-.04	-.08	-.10	-.24	-.30	-.43	-.67
246	.06	.04	.02	-.13	-.19	-.45	-.74
247	-.02	-.04	-.08	-.24	-.30	-.45	-.64
248	.02	.02	-.02	-.24	-.30	-.45	-.69
249	-.51	-.38	-.45	-.59	-.62	-.72	-.85
250	-.17	-.19	-.22	-.33	-.34	-.40	-.51
251	0	0	-.04	-.11	-.15	-.26	-.59
252	.09	.06	.02	-.04	-.06	-.19	-.56
253	.02	.02	-.02	-.13	-.19	-.15	-.67
254	.11	.08	.04	-.07	-.11	-.32	-.69
255	.02	.04	0	-.16	-.21	-.40	-.67
256	.09	.08	.04	-.13	-.19	-.38	-.69

TABLE 7.- CONTINUED

(c) Fuselage

Orifice No. \ α	0.09	8.38	16.72	25.03	27.08	29.03	33.05
301	0.13	-0.06	-0.27	-1.09	-1.13	-1.17	-1.21
302	.44	.17	-.15	-.58	-.67	-.74	-.92
303	.52	.42	.23	-.09	-.18	-.23	-.45
304	.39	.56	.69	.73	.74	.74	.74
305	.16	.33	.40	.64	.67	.70	.76
306	0	.02	0	-.09	-.11	-.15	-.24
307	0	-.08	-.27	-.58	-.63	-.66	-.76
308	.02	-.13	-.58	-1.09	-1.09	-1.04	-1.08
309	-.02	-.11	-.19	-.24	-.24	-.23	-.29
310	.18	-.04	-.31	-.64	-.72	-.81	-.97
311	.28	.17	-.27	-.44	-.52	-.64	-.87
312	.20	.33	.42	.44	.44	.45	.39
313	-.02	.08	.17	.27	.30	.26	.37
314	-.04	-.11	-.25	-.47	-.52	-.57	-.71
315	-.04	-.11	-.29	-.62	-.72	-.79	-1.00
316	-.04	-.08	-.17	-.31	-.35	-.38	-.47
317	.13	-.06	-.31	-.67	-.74	-.83	-1.00
318	.16	.11	-.08	-.40	-.48	-.57	-.79
319	.07	.21	.29	.29	.30	.32	.26
320	-.09	.06	.02	.42	.46	.51	.61
321	-.13	-.17	-.27	-.44	-.48	-.51	-.61
322	-.13	-.19	-.40	-.71	-.78	-.87	-1.08
323	-.16	-.15	-.23	-.38	-.39	-.45	-.53
324	-.04	-.19	-.35	-.56	-.59	-.64	-.68
325	-.16	-.02	.15	.31	.37	.40	.50
326	-.20	-.25	-.38	-.56	-.61	-.66	-.74
327	-.41	-.50	-.61	-.64	-.63	-.64	-.63
328	-.09	-.31	-.58	-.93	-1.00	-1.06	-1.08
329	-.13	-.04	.06	.20	.24	.28	.37
330	-.09	-.15	-.29	-.49	-.52	-.57	-.63
331	-.09	-.17	-.21	-.27	-.26	-.26	-.37
332	.02	-.08	-.19	-.60	-.85	-1.09	-1.11
333	-.30	-.17	0	.13	.18	.19	.24
334	-.16	-.04	.11	.22	.26	.28	.32
335	-.04	-.08	-.19	-.69	-.91	-.96	-.89
336	-.04	-.04	-.13	-.64	-.70	-.87	-.84
337	-.22	-.15	-.04	.04	.09	.06	.11
338	-.11	-.02	.08	.18	.20	.17	.21
339	-.02	-.04	-.11	-.44	-.59	-.74	-.82
340	-2.31	-2.21	-2.19	-2.29	-2.24	-2.21	-2.61

Note: Lines have been drawn through the pressure coefficients for which the data are doubtful.

TABLE 7.– CONTINUED

(c) Fuselage (Concluded)

Orifice No. \ α	0.09	8.38	16.72	25.03	27.08	29.03	33.05
341	-0.07	-0.04	0.02	0.07	0.07	0.04	0.03
342	0	.06	.13	.18	.18	.15	.13
343	-.18	-.25	-.33	-.46	-.52	-.64	-.76
344	-.18	-.19	-.23	-.37	-.44	-.57	-.74
345	-.02	.02	.06	.07	.07	0	-.03
346	-.04	0	.06	.07	.07	.02	-.03
347	-.02	0	.02	.04	.07	.02	-.03
348	-.04	.08	.13	.16	.16	.13	.08
349	-.04	.08	.13	.16	.16	.13	.08
350	-.04	.06	.02	-.09	-.16	-.30	-.61
351	.02	.04	.02	-.04	-.13	-.28	-.63
352	.07	.08	.11	.07	.02	-.09	-.32
353	-.04	-.06	-.04	-.02	-.04	-.06	-.18
354	.04	.06	.08	.06	.04	-.02	-.18
355	.02	0	0	-.04	-.09	-.15	-.29
356	.02	.02	.02	-.09	-.11	-.23	-.42
357	.04	.06	.04	-.11	-.16	-.30	-.58
358	~~.35~~	~~.33~~	~~.29~~	~~.22~~	~~.18~~	~~.13~~	~~.03~~
359	.04	.06	.04	-.02	-.02	-.09	-.26
360	-.02	-.02	-.02	-.06	-.09	-.19	-.47
361	-.09	-.15	-.21	-.26	-.26	-.32	-.39
362	-.04	-.06	-.08	-.22	-.22	-.23	-.42
363	0	0	-.02	-.09	-.09	-.15	-.37
364	.04	.06	.04	-.07	-.11	-.19	-.37
365	.09	.11	.08	.04	.04	-.04	-.26
366	.04	-.11	-.25	-.52	-.76	-1.30	-1.13
367	-.09	.04	.17	.30	.35	.36	.37
368	-.16	-.04	.13	.26	.30	.32	.37
369	.02	.08	.15	.18	.18	.13	.11
370	.02	.08	.15	.18	.18	.13	.11
371	.09	.15	.19	.18	.18	.13	.08
372	.09	.15	.17	.18	.18	.13	.08

Note: A line has been drawn through the pressure coefficients for which the data are doubtful.

TABLE 7.– CONCLUDED

(d) Fuselage-duct rakes

Tube No. \ α	0.05	8.38	16.72	25.03	27.08	29.03	33.05
401 T.H.[a]	0.91	0.87	0.83	0.72	0.70	0.62	0.45
402 St.H.[b]	-.11	-.25	-.33	-.44	-.48	-.70	-1.74
403 T.H.	.93	.94	.85	.72	.70	.62	.47
404	- - -	- - -	- - -	- - -	- - -	- - -	- - -
405 St.H.	.04	.04	0	-.07	-.11	-.21	-.45
406 T.H.	1.00	.96	.89	.74	.70	.62	.47
407 T.H.	1.00	.98	.92	.76	.74	.66	.50
408 St.H.	.13	.15	.15	.09	.07	-.02	-.18
409 T.H.	1.00	.98	.94	.78	.74	.68	.53
410 T.H.	1.00	.98	.94	.80	.78	.72	.58
411 St.H.	.13	.13	.08	-.02	-.07	-.19	-.37
412 T.H.	1.00	.96	.89	.74	.67	.62	.42
413 T.H.	1.00	.98	.92	.72	.56	.30	.34
414 St.H.	.13	.02	.17	-.41	-.57	-.81	-1.13
415 T.H.	1.00	.96	.85	.63	.56	.40	0
416 T.H.	1.00	.94	.69	.35	.43	.15	-.39
417 St.H.	.13	.17	-.35	-.54	-.59	-.70	-.71
418 T.H.	1.00	.98	.69	.41	.41	0	-.58
501 T.H.	.72	.71	.60	.46	.41	.34	.16
502 St.H.	.70	.65	.54	.41	.37	.30	.13
503 T.H.	.72	.73	.62	.46	.41	.34	.18
504 T.H.	.72	.73	.60	.46	.41	.34	.18
505 St.H.	.70	.65	.54	.41	.37	.30	.13
506 T.H.	.72	.71	.58	.43	.41	.32	.18
507 T.H.	.72	.69	.58	.43	.41	.32	.18
508 St.H.	.67	.63	.54	.52	.37	.28	.13
509 T.H.	.74	.67	.58	.43	.41	.32	.18
510 T.H.	.78	.81	.65	.48	.46	.34	.18
511 St.H.	.70	.65	.56	.41	.37	.30	.13
512 T.H.	.84	.85	.69	.50	.46	.38	.18
513	- - -	- - -	- - -	- - -	- - -	- - -	- - -
514 St.H.	.70	.65	.56	.39	.37	.30	.16
515 T.H.	.84	.85	.71	.52	.46	.40	.21
516 T.H.	.84	.79	.69	.52	.46	.40	.21
517 St.H.	.70	.63	.54	1.26	.37	.28	.13
518	- - -	- - -	- - -	- - -	- - -	- - -	- - -
519 T.H.	.87	.85	.71	.50	.46	.40	.24
520 St.H.	.70	.65	.54	1.26	.37	.28	.13
521 T.H.	.80	.73	.62	.46	.41	.34	.16
522 St.H.	.67	.63	.54	.39	.37	.28	.13
523 T.H.	.72	.65	.54	.39	.37	.28	.13

[a]Total-head tube (coefficient given as P_t).

[b]Static-head tube (coefficient given as P_s).

TABLE 8.- PRESSURE COEFFICIENT FOR THE FLYING MOCK-UP OF THE XP-92 AIRPLANE, CONTROLS NEUTRAL, $\beta = 9.98^{\circ}$

(a) Wing

Orifice No. \ α	0.09	8.38	16.72	25.03	27.08	29.03	33.05
101	-0.04	0.17	0.46	0.53	0.59	0.62	0.63
102	-.08	-.27	-.42	-.87	-1.07	-1.23	-1.37
103	- - -	- - -	- - -	- - -	- - -	- - -	- - -
104	- - -	- - -	- - -	- - -	- - -	- - -	- - -
105	-.04	.15	.31	.21	.22	.21	.21
106	-.08	-.44	-.56	-4.13	-3.72	-3.43	-2.55
107	0	.08	-.08	-.60	-.59	-.64	-.61
108	-.11	-.81	-3.04	-3.34	-3.04	-2.87	-2.21
109	-.06	.08	.27	.32	.33	.34	.37
110	-.17	-.33	-.44	-.81	-.83	-.83	-.92
111	-.06	.11	.35	.40	.44	.45	.47
112	-.19	-.38	-.48	-1.32	-1.72	-1.83	-1.63
113	-.06	.11	.27	.21	.24	.23	.21
114	-.17	-.54	-2.96	-2.64	-2.24	-2.09	-1.71
115	-.02	.04	0	-.23	-.24	-.28	-.32
116	-.17	-1.04	-2.11	-1.98	-1.85	.47	-1.47
117	-.17	-.06	.15	.17	.20	.21	.32
118	-.21	-.38	-.44	-.70	-.74	-.77	-.76
119	-.13	.04	.29	.36	.39	.40	.42
120	-.25	-.38	-.44	-.89	-.96	-1.02	-1.03
121	-.29	.08	.33	.34	.37	.40	.50
122	-.21	-.40	-.38	-1.45	-1.54	-1.53	-1.37
123	-.04	.04	.23	.15	.18	.15	.16
124	-.19	-.54	-2.77	-1.83	-1.65	-1.60	-1.37
125	-.06	.04	.11	-.09	-.09	-.11	-.13
126	-.19	-1.36	-1.56	-1.49	-1.39	-1.34	-1.18
127	-.11	-.04	.15	.15	.16	.17	.18
128	-.25	-.35	-.33	-.62	-.67	-.70	-.79
129	-.08	.02	.25	.23	.26	.28	.29
130	-.21	-.31	-.33	-.70	-.80	-.85	-.92
131	-.11	.02	.23	.21	.24	.23	.24
132	-.21	-.38	-.38	-1.23	-1.26	-1.23	-1.13
133	-.08	.06	.25	.21	.20	.19	.18
134	-.19	-.38	-1.46	-1.32	-1.24	-1.19	-1.08
135	-.06	.31	.21	.06	.07	.04	0
136	-.21	-2.04	-.94	-1.11	-1.07	-1.02	-.97
137	0	.02	.19	.15	.13	.13	.13
138	-.13	-.17	-.11	-.36	-.41	-.49	-.63
139	0	.08	.23	.17	.18	.17	.16
140	.08	-.15	-.13	-.45	-.57	-.64	-.79

TABLE 8.– CONTINUED

(a) Wing (Concluded)

Orifice No. \ α	0.09	8.38	16.72	25.03	27.08	29.03	33.05
141	-0.04	0.02	0.19	0.87	0.13	0.13	0.11
142	-.06	-.17	-.17	-.85	-.93	-.96	-1.05
143	-.04	-.04	.19	.11	.11	.11	.13
144	-.17	-.23	-.90	-1.00	-1.00	-.98	-.92
145	-.04	.06	.21	.06	.07	.04	.03
146	-.17	-1.19	-.67	-.85	-.85	-.83	-.84
147	.13	.17	.29	.23	.30	.43	.61
148	-.11	-.08	-.08	-.30	-.37	-.43	-.61
149	~~0~~	~~0~~	~~.13~~	~~-.02~~	~~-.04~~	~~.09~~	~~-.16~~
150	-.11	-.15	-.13	-.47	-.61	-.68	-.84
151	.08	.31	.44	.38	.41	.40	.39
152	-.13	-.19	-.35	-1.06	-1.11	-1.11	-1.03
153	-.13	.04	.35	.45	.48	.47	.50
154	-.23	-.35	-.83	-.96	-.98	-.96	-.92
155	0	.15	.25	.11	.11	.09	.05
156	-.19	-1.04	-.71	-.85	-.85	-.85	-.84
157	.04	.11	.25	.19	.20	.17	.61
158	-.06	-.11	-.02	-.26	-.33	-.38	-.58
159	.04	.08	.23	.15	.16	.13	.11
160	-.04	-.08	-.04	-.36	-.48	-.55	-.74
161	-.02	.02	.15	.02	.02	.02	0
162	-.06	-.13	-.29	-.89	-.96	-.96	-.92
163	-.06	.02	.13	.02	.02	.02	0
164	-.11	-.35	-.73	-.85	-.85	-.85	-.84
165	-.08	.04	.15	.04	-.18	.02	-.03
166	-.17	-.73	-.54	-.74	-.76	-.77	-.82
167	.15	.15	.27	.19	.13	.13	0
168	.13	.11	.23	.11	.09	.04	-.08
169	.11	.11	.17	.02	-.04	-.09	-.26
170	.11	.11	.15	-.06	-.16	-.23	-.50
171	.46	.08	-.35	-.34	-.41	-.43	-.50
172	.08	.06	-.06	-.66	-.74	-.77	-.82
173	.11	-.02	-.08	-.28	-.33	-.34	-.37
174	.08	-.31	-.44	-.66	-.70	-.72	-.76
175	0	-.19	-.13	-.34	-.37	-.40	-.45
176	.04	-.31	-.29	-.57	-.61	-.66	-.74

Note: A line has been drawn through the pressure coefficients for which the data are doubtful.

TABLE 8.– CONTINUED

(b) Vertical tail

Orifice No. \ α	0.09	8.38	16.72	25.03	27.08	29.03	33.05
201	0.06	-0.08	-0.13	-0.02	-0.02	-0.21	-1.43
202	-1.33	-1.11	-.93	-.94	-.98	-.96	-.62
203	.27	.13	.07	-.15	-.22	-.40	-1.30
204	~~-.04~~	~~.11~~	~~.11~~	~~.11~~	~~.09~~	~~.06~~	~~-.03~~
205	.27	.15	-.22	-.74	-.78	-.70	-1.11
206	~~.08~~	~~.15~~	~~.20~~	~~.19~~	~~.20~~	~~.17~~	~~.08~~
207	.27	.08	-.26	-.72	-.76	-.68	-1.05
208	-.40	-.44	-.52	-.64	-.67	-.70	-.70
209	.17	.02	-.13	-.23	-.26	-.19	-.76
210	-1.21	-1.21	-1.54	-1.45	-1.43	-1.40	-1.00
211	-1.90	.08	0	-.13	-.18	-.26	-.89
212	-.63	-.65	-.76	-.89	-.93	-.96	-.92
213	.11	.04	-.02	-.23	-.30	-.55	-.95
214	-.42	-.46	-.63	-.77	-.83	-.85	-.89
215	.13	.06	-.18	-.53	-.52	-.55	-.86
216	~~-.38~~	~~-.48~~	~~-.61~~	~~-.79~~	~~-.85~~	~~-.89~~	~~-.92~~
217	.19	.06	.02	-.13	-.18	-.19	-.41
218	-1.44	-2.36	-1.89	-2.55	-2.74	-1.00	-1.81
219	.06	.02	-.04	-.19	-.24	-.34	-.81
220	-.44	-.52	-.57	-.77	-.85	-.89	-1.00
221	-.02	-.06	-.13	-.38	-.46	-.66	-.86
222	-.38	-.44	-.54	-.74	-.85	-.89	-1.00
223	-.04	-.06	-.20	-.38	-.39	-.55	-.76
224	-.33	-.44	-.57	-.74	-.85	-.89	-.97
225	.11	.06	-.02	-.09	-.11	-.15	-.32
226	-.94	-.96	-.72	-.89	-1.09	-1.23	-1.22
227	.02	0	-.04	-.15	-.20	-.32	-.68
228	-.23	-.21	-.20	-.34	-.41	-.51	-.76
229	~~.08~~	~~.15~~	~~.20~~	~~.30~~	~~.20~~	~~.17~~	~~.08~~
230	-.13	-.15	-.20	-.36	-.44	-.53	-.65
231	-.02	-.02	-.09	-.28	-.41	-.51	-.70
232	-.11	-.15	-.20	-.36	-.46	-.53	-.73
233	.13	.08	.02	-.04	-.07	-.11	-.30
234	-.90	-.69	-.57	-.72	-.83	-.91	-1.05
235	.06	.04	-.02	-.09	-.11	-.19	-.51

Note: Lines have been drawn through the pressure coefficients for which the data are doubtful.

TABLE 8.- CONTINUED

(b) Vertical tail (Concluded)

Orifice No. \ α	0.09	8.38	16.72	25.03	27.08	29.03	33.05
236	-0.31	-0.42	-0.85	-0.81	-0.65	-0.70	-0.95
237	.06	.04	0	-.13	-.22	-.43	-.76
238	-.06	-.08	-.13	-.28	-.33	-.43	-.70
239	.02	.02	-.02	-.21	-.35	-.47	-.68
240	-.06	-.11	-.16	-.32	-.39	-.49	-.73
241	.02	-.02	-.09	-.15	-.18	-.21	-.41
242	-.67	-.52	-.48	-.64	-.50	-.79	-.95
243	.04	.02	-.24	-.09	-.11	-.19	-.51
244	-.21	-.17	-.20	-.28	-.37	-.40	-.78
245	.04	.04	0	-.15	-.22	-.40	-.76
246	-.25	-.06	-.09	-.21	-.28	-.38	-.68
247	.02	.02	-.02	-.21	-.30	-.43	-.68
248	-.02	-.04	-.09	-.23	-.30	-.40	-.68
249	-.13	-.17	-.22	-.30	-.33	-.38	-.54
250	-.52	-.38	-.39	-.55	-.61	-.68	-.92
251	.04	.06	.02	-.06	-.09	-.17	-.51
252	0	.04	0	-.09	-.13	-.19	-.54
253	.04	.04	0	-.11	-.18	-.32	-.68
254	.06	.04	.02	-.11	-.16	-.26	-.62
255	.04	.04	0	-.15	-.24	-.36	-.68
256	.06	.06	.02	-.13	-.20	-.30	-.62

TABLE 8.– CONTINUED

(c) Fuselage

Orifice No. \ α	0.09	8.38	16.72	25.03	27.08	29.03	33.05
301	0.16	-0.04	-0.33	-1.02	-1.09	-1.15	-1.24
302	.02	-.12	-.48	-1.11	-1.13	-1.11	-1.08
303	0	-.10	-.30	-.61	-.68	-.74	-.81
304	.04	.06	.07	-.02	-.04	-.09	-.16
305	.18	.37	.54	.71	.74	.78	.84
306	~~.31~~	~~.43~~	~~.50~~	~~.50~~	~~.51~~	~~.48~~	~~.43~~
307	.51	.47	.33	.06	-.04	-.13	-.30
308	.39	.12	-.20	-.61	-.72	-.85	-1.03
309	.06	-.10	-.24	-.38	-.40	-.48	-.54
310	-.04	-.08	-.16	-.25	-.30	-.35	-.43
311	-.04	-.10	-.28	-.56	-.68	-.80	-.97
312	-.04	-.08	-.20	-.31	-.38	-.46	-.57
313	.08	.24	.41	.58	.64	.67	.73
314	.22	.37	.41	.35	.34	.30	.24
315	.31	.27	.11	-.19	-.30	-.39	-.59
316	.24	.02	-.24	-.58	-.70	-.83	-1.00
317	-.10	-.10	-.18	-.31	-.36	-.41	-.49
318	-.10	-.16	-.35	-.63	-.72	-.83	-1.00
319	-.10	-.16	-.26	-.42	-.47	-.57	-.68
320	-.12	-.02	.07	.19	.21	.24	.27
321	.06	.22	.30	.33	.34	.33	.32
322	.14	.16	.02	-.21	-.30	-.39	-.57
323	.12	-.06	-.30	-.63	-.72	-.83	-1.00
324	-.24	-.24	-.30	-.52	-.57	-.67	-.70
325	-.16	-.14	-.09	.02	.04	.04	.05
326	-.08	.06	.18	.19	.19	.22	.22
327	-.35	-.45	-.54	-.56	-.57	-.61	-.62
328	.02	-.08	-.28	-.56	-.64	-.70	-.76
329	-.08	0	.11	.27	.32	.33	.41
330	-.06	.10	.22	.25	.23	.30	.32
331	-.12	-.18	-.22	-.25	-.26	-.30	-.43
332	-.27	-.35	-.50	-.71	-.79	-.91	-1.08
333	-.24	-.12	.02	.17	.21	.22	.27
334	-.16	0	.16	.31	.32	.35	.41
335	-.24	-.33	-.46	-.65	-.72	-.85	-.97
336	-.16	-.18	-.28	-.44	-.51	-.63	-.81
337	-.18	-.12	0	.08	.11	.11	.11
338	-.16	-.06	.07	.15	.17	.18	.19
339	-.12	-.14	-.20	-.33	-.40	-.52	-.73
340	~~1.63~~	~~1.61~~	~~1.70~~	~~1.65~~	~~1.68~~	~~1.70~~	~~1.97~~

Note: Lines have been drawn through the pressure coefficients for which the data are doubtful.

TABLE 8.– CONTINUED

(c) Fuselage (Concluded)

Orifice No. \ α	0.09	8.38	16.72	25.03	27.08	29.03	33.05
341	-0.04	-0.02	0.02	0.08	0.11	0.06	0.05
342	-.04	.02	.09	.13	.15	.11	.08
343	-.10	-.12	-.20	-.52	-.64	-.72	-.78
344	-.02	-.02	-.09	-.40	-.51	-.74	-.86
345	.02	.06	.11	.13	.13	.11	.05
346	.04	.08	.11	.15	.17	.13	.08
347	0	.02	.07	.08	.11	.07	.03
348	0	.04	.11	.11	.13	.07	0
349	.02	.04	.11	.11	.13	.07	0
350	.04	.04	.02	-.06	-.09	-.18	-.41
351	.02	.02	0	-.04	-.06	-.13	-.27
352	.06	.06	.09	.06	.06	0	-.14
353	.16	.18	.24	.21	.19	.11	-.03
354	.08	.10	.13	.08	.06	-.07	-.32
355	.04	.06	.04	-.04	-.09	-.24	-.70
356	.06	.06	.04	-.08	-.11	-.24	-.62
357	.06	.06	.04	-.08	-.13	-.24	-.57
358	~~.35~~	~~.35~~	~~.33~~	~~.23~~	~~.21~~	~~.16~~	~~.03~~
359	.04	.04	.02	-.04	-.06	-.13	-.27
360	.02	.02	0	-.06	-.09	-.18	-.38
361	-.02	-.10	-.09	-.19	-.21	-.33	-.49
362	0	-.02	-.02	-.08	-.13	-.24	-.62
363	.06	.06	.07	0	-.04	-.09	-.27
364	.08	.10	.11	.06	.02	-.07	-.24
365	.10	.12	.11	.08	.06	-.04	-.24
366	-.18	-.29	-.44	-.81	-1.00	-1.17	-1.08
367	-.08	.08	.26	.44	.47	.50	.51
368	-.14	-.02	.16	.29	.34	.35	.41
369	.02	.10	.18	.21	.21	.18	.14
370	.02	.10	.18	.21	.21	.18	.14
371	.10	.16	.20	.21	.19	.16	.08
372	.10	.16	.20	.21	.19	.16	.08

Note: A line has been drawn through the pressure coefficients for which the data are doubtful.

TABLE 8.– CONCLUDED

(d) Fuselage-duct rakes

Tube No. \ α	0.09	8.38	16.72	25.03	27.08	29.03	33.05
401 T.H.[a]	0.98	0.98	0.89	0.66	0.55	0.53	0.38
402 St.H.[b]	.48	.48	.41	.32	.30	.23	.11
403 T.H.	.98	.98	.98	.85	.79	.77	.68
404	---	---	---	---	---	---	---
405 St.H.	.29	.29	.22	.06	.13	.09	-.11
406 T.H.	.98	.98	.96	.85	.79	.77	.68
407 T.H.	.92	.98	.93	.83	.77	.74	.65
408 St.H.	.15	.19	.16	.13	.11	.04	-.11
409 T.H.	.85	.98	.96	.85	.81	.77	.68
410 T.H.	.98	.98	.93	.87	.83	.81	.73
411 St.H.	.11	.11	.04	-.11	-.13	-.19	-.38
412 T.H.	.98	.96	.91	.77	.70	.66	.49
413 T.H.	.98	.96	.91	.72	.60	.49	.30
414 St.H.	.06	-.02	-.13	-.30	-.34	-.47	-.86
415 T.H.	.98	.94	.84	.64	.53	.45	.16
416 T.H.	.98	.89	.70	.15	.19	.17	-.27
417 St.H.	.04	-.17	-.28	-.53	-.55	-.57	-.65
418 T.H.	.98	.83	.59	.45	.32	-.11	-.57
501 T.H.	.69	.65	.56	.43	.38	.32	.16
502 St.H.	.67	.61	.54	.40	.34	.30	.11
503 T.H.	.71	.67	.59	.43	.38	.32	.16
504 T.H.	.71	.65	.59	.43	.38	.32	.16
505 St.H.	.67	.61	.52	.40	.36	.30	.11
506 T.H.	.69	.62	.56	.43	.38	.32	.16
507 T.H.	.69	.62	.56	.43	.38	.32	.19
508 St.H.	.67	.61	.54	.40	.34	.28	.11
509 T.H.	.71	.67	.56	.45	.38	.34	.19
510 T.H.	.69	.60	.52	.38	.34	.30	.14
511 St.H.	.67	.61	.54	.40	.36	.30	.11
512 T.H.	.75	.62	.54	.40	.34	.30	.14
513	---	---	---	---	---	---	---
514 St.H.	.67	.61	.54	.40	.36	.30	.11
515 T.H.	.75	.62	.54	.40	.36	.30	.14
516 T.H.	.73	.62	.54	.40	.36	.30	.14
517 St.H.	.67	.61	.54	.40	.36	.30	.11
518	---	---	---	---	---	---	---
519 T.H.	.75	.62	.54	.38	.36	.30	.14
520 St.H.	.67	.61	.54	.40	.36	.30	.11
521 T.H.	.71	.60	.54	.38	.34	.28	.16
522 St.H.	.67	.61	.52	.40	.36	.30	.14
523 T.H.	.67	.58	.52	.38	.34	.28	.14

[a]Total-head tube (coefficient given as P_t).

[b]Static-head tube (coefficient given as P_s).

TABLE 9.– PRESSURE COEFFICIENTS FOR THE FLYING MOCK-UP OF XP-92 AIRPLANE, CONTROLS NEUTRAL, $\beta = -20.20^{\circ}$

(a) Wing

Orifice No. \ α	0.04	8.37	16.71	25.00	26.94	28.97	32.97
101	-0.04	0.19	0.43	0.66	0.66	0.69	0.74
102	.11	-.13	-.51	-.96	-.96	-.81	-.97
103	--	--	--	--	--	--	--
104	--	--	--	--	--	--	--
105	-.06	.32	.57	.74	.74	.77	.79
106	.06	-.38	-.89	-2.34	-.91	-.81	-.97
107	-.04	.49	.57	.43	.60	.58	.51
108	.11	-.74	-1.89	-3.02	-.96	-.81	-1.00
109	-.04	.15	.32	.51	.51	.54	.59
110	.17	0	-.30	-.72	-.79	-.81	-1.00
111	-.13	.13	.38	.57	.60	.61	.67
112	.04	-.19	-.40	-1.60	-.74	-.81	-.97
113	-.13	.30	.53	.72	.70	.73	.77
114	.04	-.40	-.74	-1.53	-.74	-.79	-.92
115	-.08	.47	.60	.66	.68	.67	.64
116	.11	-.77	-1.94	-1.43	-.74	-.79	-.90
117	-.11	.04	.19	.34	.34	.38	.44
118	.38	.04	-.15	-.55	-.77	-.81	-.92
119	-.13	.04	.21	.36	.36	.40	.46
120	.13	.02	-.19	-.85	-.77	-.83	-.95
121	-.19	.06	.32	.47	.47	.50	.56
122	.04	-.17	-.40	-1.26	-.74	-.81	-.90
123	-.04	.28	.53	.64	.64	.65	.69
124	.02	-.40	-1.02	-1.09	-.70	-.75	-.85
125	-.15	.40	.64	.68	.68	.67	.67
126	.08	-.72	-2.38	-1.02	-.70	-.73	-.82
127	-.08	0	.11	.21	.19	.21	.26
128	.11	0	-.09	-.51	-.66	-.77	-.85
129	-.13	0	.13	.21	.21	.23	.28
130	.08	.02	-.17	-.79	-.72	-.81	-.87
131	-.19	0	.17	.28	.26	.29	.36
132	-.04	-.19	-.51	-.94	-.70	-.81	-.87
133	-.21	.13	.32	.47	.45	.48	.54
134	-.06	-.40	-1.02	-.79	-.64	-.71	-.79
135	-.23	.32	.53	.40	.60	.63	.64
136	-.04	-.74	-.94	-.74	-.83	-.69	-.79
137	-.02	.04	.09	.11	.04	.04	.05
138	.08	.06	.04	-.32	-.57	-.67	-.77

TABLE 9.– CONTINUED

(a) Wing (Concluded)

Orifice No. \ α	0.04	8.37	16.71	25.00	26.94	28.97	32.97
139	−0.04	0.04	0.11	0.15	0.09	0.08	0.10
140	.08	.06	−.11	−.68	−.68	−.77	−.85
141	−.08	.02	.11	.15	.11	.11	.13
142	.02	−.04	−.19	−.79	−.68	−.79	−.85
143	−.08	.11	.21	.30	.26	.27	.33
144	−.11	−.36	−.70	−.64	−.83	−.71	−.79
145	−.13	.21	.36	.43	.40	.42	.46
146	−.08	−.55	−.74	−.60	−.60	−.67	−.77
147	.04	.11	.15	.15	.09	.17	.46
148	.08	.08	.06	−.28	−.64	−.69	−.85
149	.02	.04	.02	−.02	−.11	−.15	−.18
150	.23	.08	−.11	−.74	−.74	−.88	−.95
151	−.06	.28	.38	.45	.43	.44	.56
152	.13	−.06	−.60	−.81	−.74	−.88	−.92
153	−.19	.26	.68	.74	.74	.77	.79
154	−.17	−.47	−.64	−.62	−.64	−.73	−.82
155	−.17	.28	.45	.49	.47	.48	.51
156	−.11	−.57	−.68	−.55	−.60	−.71	−.74
157	.02	.06	.11	.11	0	0	.03
158	.08	.04	.04	−.28	−.53	−.58	−.72
159	0	.06	.11	.09	0	−.02	−.03
160	.08	.08	−.06	−.64	−.66	−.77	−.85
161	−.04	.04	.09	.06	0	0	.03
162	.02	−.04	−.47	−.68	−.64	−.75	−.82
163	−.13	.06	.13	.17	.13	.13	.18
164	−.06	−.26	−.62	−.55	−.60	−.71	−.74
165	−.23	.11	.26	.32	.30	.31	.36
166	−.11	−.60	−.81	−.51	−.57	−.69	−.74
167	.11	.15	.17	.09	−.23	−.27	−.38
168	.15	.17	.23	.02	−.43	−.48	−.64
169	.11	.13	.09	−.26	−.45	−.52	−.56
170	.13	.15	.09	−.49	−.66	−.77	−.85
171	.11	.13	−.13	−.34	−.43	−.50	−.51
172	.11	.11	−.30	−.57	−.66	−.77	−.82
173	.15	.06	−.09	−.15	−.26	−.31	−.31
174	.11	−.04	−.38	−.47	−.60	−.73	−.72
175	−.04	−.15	−.23	−.15	−.26	−.29	−.28
176	.04	−.23	−.64	−.43	−.57	−.67	−.69

Note: A line has been drawn through the pressure coefficients for which the data are doubtful.

TABLE 9.– CONTINUED

(b) Vertical tail

Orifice No. \ α	0.04	8.37	16.71	25.00	26.94	28.97	32.97
201	-3.34	-3.06	-2.96	-2.47	-1.63	-1.25	-1.08
202	-.89	-.98	-1.06	-1.13	-1.00	-1.02	-1.15
203	-2.49	-2.38	-2.15	-1.55	-1.33	-1.15	-1.00
204	~~.11~~	~~.11~~	~~.11~~	~~.06~~	~~-.04~~	~~-.06~~	~~-.18~~
205	-.89	-.92	-1.04	-1.17	-1.11	-.94	-.90
206	~~.04~~	~~0~~	~~.04~~	~~.02~~	~~-.02~~	~~-.02~~	~~-.10~~
207	-.81	-.83	-.96	-1.11	-1.09	-.92	-.87
208	.53	.44	.32	-.06	-.76	-.83	-1.08
209	-3.17	-3.35	-3.19	-2.96	-2.48	-1.79	-1.28
210	-.09	-.31	-.55	-.66	-.89	-1.04	-.95
211	-3.15	-2.19	-2.85	-3.19	-1.98	-1.50	-1.13
212	.36	.23	.11	0	-.65	-.88	-.92
213	-.74	-.83	-1.17	-1.45	-1.36	-1.21	-1.00
214	.38	.31	.23	.09	-.74	-.83	-.92
215	-.53	-.69	-.79	-1.02	-1.04	-.90	-.82
216	~~.36~~	~~.29~~	~~.23~~	~~-.02~~	~~-.76~~	~~-.83~~	~~-.92~~
217	-1.32	-1.48	-1.43	-1.85	-1.43	-1.23	-.95
218	.17	-.04	-.19	-.32	-.20	-.29	-.59
219	.06	-1.15	-1.17	-1.77	-1.50	-1.21	-.92
220	.30	.23	.17	.04	-.33	-.67	-.85
221	-.62	-.71	-.79	-1.02	-1.11	-.96	-.85
222	.21	.17	.13	-.04	-.67	-.81	-.90
223	-.57	-.46	-.77	-.89	-.76	-.88	-.79
224	.17	.13	.04	-.17	-.65	-.77	-.87
225	-.68	-.77	-.83	-.74	-.76	-.63	-.62
226	.19	.13	.06	.02	0	.02	-.18
227	-.89	-.92	-.91	-.94	-.89	-.73	-.64
228	.09	.06	.04	0	-.24	-.31	-.62
229	~~-.06~~	~~0~~	~~.04~~	~~.02~~	~~-.02~~	~~-.02~~	~~-.10~~
230	.06	.06	.04	-.11	-.52	-.63	-.77
231	-.21	-.23	-.28	-.30	-.46	-.46	-.54
232	.06	.06	.02	-.19	-.50	-.54	-.72
233	-.57	-.65	-.66	-.64	-.63	-.56	-.59
234	.15	.11	-.04	0	-.02	.02	-.15
235	-.74	-.88	-.94	-1.06	-.85	-.67	-.62

Note: Lines have been drawn through the pressure coefficients for which the data are doubtful.

TABLE 9. - CONTINUED

(b) Vertical tail (Concluded)

Orifice No. \ α	0.04	8.37	16.71	25.00	26.94	28.97	32.97
236	-0.04	-0.13	-0.30	-0.21	-0.16	-0.13	-0.33
237	.43	-.35	-.40	-.40	-.65	-.58	-.56
238	.09	.11	.09	-.02	-.46	-.56	-.74
239	-.13	-.15	-.17	-.19	-.13	-.40	-.49
240	.04	.02	0	-.19	-.46	-.48	-.64
241	-.55	-.58	-.57	-.57	-.61	-.52	-.59
242	.04	0	-.02	-.06	-.11	-.08	-.21
243	-.70	-.77	-.81	-.96	-.76	-.63	-.59
244	-.04	-.11	-.15	-.17	-.16	-.15	-.38
245	-.38	-.31	-.32	-.36	-.61	-.54	-.56
246	.04	.06	.04	-.04	-.44	-.52	-.74
247	-.09	-.11	-.13	-.13	-.33	-.38	-.51
248	.06	.06	.04	-.13	-.44	-.48	-.64
249	-.51	-.52	-.51	-.51	-.59	-.50	-.59
250	-.17	-.21	-.23	-.28	-.33	-.27	-.33
251	-.62	-.58	-.51	-.60	-.59	-.50	-.56
252	-.04	-.23	-.21	-.23	-.33	-.29	-.49
253	-.26	-.17	-.19	-.23	-.44	-.44	-.56
254	-.04	0	-.02	-.11	-.35	-.42	-.67
255	0	-.02	-.02	-.06	-.35	-.42	-.59
256	.09	.06	.04	-.04	-.39	-.46	-.64

TABLE 9.– CONTINUED

(c) Fuselage

Orifice No. \ α	0.04	8.37	16.71	25.00	26.94	28.97	32.97
301	−0.23	−0.40	−0.70	−1.20	−1.22	−1.21	−1.29
302	.43	.13	−.24	−.61	−.70	−.73	−.97
303	.70	.64	.44	.18	.09	.04	−.18
304	.34	.60	.78	.91	.93	.92	.97
305	−.19	0	.18	.30	.35	.35	.42
~~306~~	~~−.49~~	~~−.43~~	~~−.39~~	~~−.44~~	~~−.48~~	~~−.50~~	~~−.63~~
307	−.85	−1.00	−.96	−.89	−.91	−.92	−.97
308	−.38	−.74	−1.04	−1.04	−1.04	−1.06	−1.11
309	−.38	−.40	−.46	−.52	−.50	−.50	−.58
310	.15	−.13	−.50	−.89	−.98	−1.04	−.79
311	.47	.36	.30	−.24	−.33	−.42	−.68
312	.21	.43	.59	.70	.72	.71	.74
313	−.34	−.30	−.24	−.20	−.18	−.17	−.13
314	−.26	−.40	−.61	−.87	−.93	−.98	−1.18
315	−.15	−.21	−.39	−.70	−.76	−.79	−1.03
316	−.23	−.19	−.18	−.33	−.33	−.38	−.55
317	.19	−.06	−.44	−.83	−.91	−.98	−1.26
318	.36	.32	.13	−.16	−.20	−.29	−.50
319	.32	.30	.46	.57	.61	.58	.63
320	−.34	−.17	.02	.20	.24	.29	.39
321	−.32	−.45	−.63	−.85	−.89	−.94	−1.11
322	−.21	−.28	−.46	−.70	−.76	−.79	−.77
323	−.30	−.23	−.24	−.33	−.35	−.38	−.53
324	.06	−.13	−.37	−.65	−.67	−.73	−.87
325	−.38	−.21	−.02	.18	.22	.27	.37
326	−.32	−.47	−.70	−.96	−1.00	−1.04	−1.18
327	−.68	−.79	−.91	−1.00	−1.02	−1.00	−1.13
328	−.13	−.43	−.74	−1.17	−1.17	−1.21	−1.29
329	−.38	−.34	−.24	−.13	−.11	−.08	−.03
330	−.15	−.34	−.61	−.89	−.96	−1.00	−1.16
331	−.30	−.32	−.33	−.41	−.41	−.42	−.58
332	.21	.13	.02	−.30	−.80	−.85	−1.00
333	−.49	−.40	−.24	−.09	−.09	−.04	.03
334	−.21	−.09	.02	.13	.16	.17	.21
335	.13	.11	.02	−.46	−.78	−.85	−.92
336	.09	.06	.02	−.46	−.76	−.83	−.87

Note: A line has been drawn through the pressure coefficients for which the data are doubtful.

TABLE 9.- CONTINUED

(c) Fuselage (Concluded)

Orifice No. \ α	0.04	8.37	16.71	25.00	26.94	28.97	32.97
337	-0.38	-0.34	-0.24	-0.16	-0.16	-0.11	-0.08
338	-.15	-.04	.04	.09	.09	.13	.16
339	.04	.04	.02	-.35	-.70	-.77	-.84
340	~~2.26~~	~~2.28~~	~~2.24~~	~~2.24~~	~~2.24~~	~~2.17~~	~~2.61~~
341	-.21	-.22	-.16	-.11	-.11	-.08	-.11
342	-.02	0	.04	.09	.07	.06	.08
343	-.36	-.37	-.37	-.41	-.52	-.52	-.55
344	-.30	-.35	-.39	-.41	-.57	-.52	-.55
345	0	.07	.11	.11	0	.02	0
346	-.11	-.07	0	.04	-.02	0	-.03
347	-.15	-.16	-.13	-.09	-.11	-.08	-.11
348	-.02	.02	.07	.09	.07	.06	.05
349	-.02	0	.04	.07	.02	.04	.03
350	.04	.07	.09	-.07	-.37	-.44	-.66
351	.02	.04	.07	-.04	-.35	-.44	-.68
352	.06	.09	.13	.13	-.04	-.08	-.21
353	-.15	-.22	-.18	-.16	-.16	-.19	-.34
354	-.02	0	0	0	-.04	-.06	-.18
355	-.09	-.07	-.07	-.09	-.18	-.21	-.34
356	0	.02	0	-.11	-.37	-.40	-.53
357	.04	.07	.09	-.07	-.37	-.46	-.63
358	~~.19~~	~~.20~~	~~.20~~	~~.16~~	~~.07~~	~~.04~~	~~-.05~~
359	0	0	.02	-.04	-.22	-.25	-.39
360	-.04	-.04	-.04	-.07	-.22	-.27	-.45
361	0	-.07	-.16	-.28	-.35	-.38	-.53
362	0	-.07	-.04	-.11	-.26	-.31	-.47
363	-.02	-.02	-.04	-.11	-.22	-.25	-.42
364	.04	.07	.02	-.09	-.26	-.29	-.42
365	.06	.09	.07	.02	-.13	-.21	-.34
366	.13	-.02	-.18	-.44	-.78	-.83	-1.05
367	-.15	-.04	.07	.18	.18	.19	.24
368	-.38	-.30	-.18	-.04	-.04	0	.08
369	-.17	-.11	-.04	0	-.04	-.04	-.11
370	-.17	-.11	-.04	0	-.04	-.04	-.11
371	0	.07	.11	.11	.04	.04	0
372	0	.07	.11	.11	.04	.04	0

Note: Lines have been drawn through the pressure coefficients for which the data are doubtful.

TABLE 9.– CONCLUDED

(d) Fuselage-duct rakes

Tube No. \ α	0.04	8.37	16.71	25.00	26.94	28.97	32.97
401 T.H.[a]	0.77	0.75	0.72	0.49	0.39	0.33	0.13
402 St.H.[b]	.25	0	-.24	-.40	-.61	-.67	-1.00
403 T.H.	.83	.25	.72	.47	.33	.27	-.03
404	---	---	---	---	---	---	---
405 St.H.	.23	.19	.09	-.15	-.35	-.40	-.71
406 T.H.	.87	.83	.76	.51	.41	.37	.16
407 T.H.	.87	.87	.80	.60	.52	.50	.32
408 St.H.	.21	.23	.16	.04	-.07	-.11	-.26
409 T.H.	.89	.87	.80	.57	.52	.48	.29
410 T.H.	.83	.79	.76	.55	.50	.46	.32
411 St.H.	.13	.15	.11	0	-.16	-.21	-.42
412 T.H.	.77	.73	.70	.53	.46	.35	.18
413 T.H.	.81	.79	.76	.57	.50	.46	.18
414 St.H.	.21	.13	-.11	-.36	-.63	-.71	-1.00
415 T.H.	.77	.75	.67	.43	.28	.19	-.29
416 T.H.	.77	.75	.54	.15	-.11	-.21	-.58
417 St.H.	.23	.11	-.30	-.49	-.72	-.71	-.82
418 T.H.	.77	.83	.65	.34	.30	.10	-.61
501 T.H.	.39	.44	.48	.36	.26	.23	.11
502 St.H.	.33	.33	.35	.23	.13	.11	-.05
503 T.H.	.42	.50	.50	.36	.26	.25	.08
504 T.H.	.42	.52	.48	.34	.24	.23	.05
505 St.H.	.33	.33	.35	.23	.13	.08	-.05
506 T.H.	.39	.48	.43	.11	.22	.25	.03
507 T.H.	.35	.42	.39	.09	.20	.15	.03
508 St.H.	.33	.33	.35	.23	.13	.08	-.05
509 T.H.	.39	.37	.41	.30	.17	.17	.03
510 T.H.	.54	.52	.52	.36	.26	.23	.08
511 St.H.	.35	.35	.37	.26	.13	.11	-.05
512 T.H.	.60	.58	.59	.40	.33	.27	.11
513	---	---	---	---	---	---	---
514 St.H.	.35	.35	.37	.26	.16	.13	-.05
515 T.H.	.65	.62	.61	.45	.35	.33	.16
516 T.H.	.65	.62	.59	.45	.35	.33	.16
517 St.H.	.35	.35	.35	.26	.13	.21	-.05
518	---	---	---	---	---	---	---
519 T.H.	.65	.58	.61	.43	.35	.29	.13
520 St.H.	.35	.35	.35	.36	.13	.11	-.05
521 T.H.	.58	.44	.43	.34	.41	.19	.03
522 St.H.	.35	.35	.35	.26	.13	.11	-.05
523 T.H.	.44	.35	.37	.04	.15	.15	-.03

[a]Total-head tube (coefficient given as P_t).

[b]Static-head tube (coefficient given as P_s).

TABLE 10.– PRESSURE COEFFICIENTS FOR THE FLYING MOCK-UP OF THE XP-92 AIRPLANE. CONTROLS NEUTRAL, $\beta = 20.17^{\circ}$

(a) Wing

Orifice No. \ α	0.04	8.37	16.71	25.00	26.94	28.97	32.97
101	0	0.20	0.33	0.52	0.45	0.40	0.59
102	-.15	-.27	-1.11	-1.07	-1.00	-1.04	-1.32
103	- - -	- - -	- - -	- - -	- - -	- - -	- - -
104	- - -	- - -	- - -	- - -	- - -	- - -	- - -
105	.02	.11	.09	0	0	0	-.05
106	-.09	-.40	-1.19	-4.22	-4.15	-2.19	-4.05
107	.02	-.04	-.48	-.98	-.98	-1.04	-1.19
108	-.11	-1.19	-2.67	-3.48	-3.21	-3.21	-3.03
109	-.17	-.08	.02	.09	.13	.13	.14
110	-.34	-.44	-.75	-.89	-.91	-.87	-.89
111	0	.13	.21	.33	.32	.34	.38
112	-.21	-.44	-.71	-1.30	-1.47	-1.57	-1.84
113	-.04	.04	.02	0	0	-.02	-.03
114	-.19	-.42	-.98	-3.26	-2.83	-2.81	-2.46
115	-.02	-.08	-.40	-1.04	-.62	-.66	-.70
116	-.19	-1.29	-2.15	-2.13	-2.00	-4.11	-1.89
117	-.30	-.19	-.13	.04	.04	.04	.11
118	-.40	-.50	-.63	-.76	-.77	-.72	-.73
119	-.17	.06	.23	.28	.32	.40	.38
120	-.19	-.50	-.85	-.93	-.94	-.89	-.92
121	-.02	.11	.21	.30	.30	.32	.35
122	-.26	-.42	-.58	-1.24	-1.36	-1.40	-1.57
123	-.06	-.04	-.06	-.07	-.06	-.06	-.08
124	-.19	-.67	-2.92	-2.22	-2.02	-2.02	-1.84
125	-.06	-.08	-.29	-.39	-.40	-.40	-.46
126	-.21	-1.17	-1.79	-1.59	-1.53	-1.51	-1.49
127	-.26	-.17	-.11	.02	.02	.02	.08
128	-.40	-.46	-.54	-.76	-.70	-.70	-.68
129	0	.11	.21	.30	.30	.32	.32
130	-.32	-.42	-.56	-.67	-.70	-.70	-.73
131	-.06	.04	.11	.18	-.02	.19	.19
132	-.21	-.33	-.44	-1.11	-1.17	-1.19	-1.22
133	-.04	.04	.06	.07	.06	.06	.05
134	-.19	-.67	-2.34	-1.59	-1.49	-1.49	-1.11
135	-.02	0	-.11	-.18	-.19	-.19	-.24
136	-.15	-.90	-1.25	-1.15	-1.17	-1.13	-1.08
137	-.21	-.15	-.06	.07	.04	.04	.08
138	-.26	-.25	-.29	-.35	-.40	-.43	-.46
139	.09	.11	.17	.22	.21	.21	.24
140	-.13	-.19	-.27	-.35	-.38	-.40	-.49

TABLE 10.– CONTINUED

(a) Wing (Concluded)

Orifice No. \ α	0.04	8.37	16.71	25.00	26.94	28.97	32.97
141	0	0.04	0.08	0.11	0.11	0.13	0.14
142	-.11	-.17	-.23	-.63	-.70	-.72	-.81
143	-.02	.02	.04	0	.04	.09	.05
144	-.13	-.48	-1.59	-1.22	-1.17	-1.17	-1.11
145	-.02	0	-.02	-.07	-.06	-.06	-.08
146	-.15	-.77	-.83	-.98	-.98	-.96	-.92
147	-.06	0	.06	.18	.26	.32	.46
148	-.21	-.21	-.23	-.30	-.34	-.36	-.43
149	-.02	-.21	.02	-.02	-.06	-.06	-.41
150	-.13	-.19	-.25	-.35	-.38	-.38	-.49
151	.23	.25	.29	.33	.34	.36	.38
152	-.06	-.15	-.23	-.87	-.91	-.91	-.97
153	-.11	.31	.46	.41	.45	.55	.59
154	-.19	-.63	-1.19	-1.09	-1.06	-1.04	-1.00
155	.02	.06	.02	-.02	-.04	-.02	-.08
156	-.17	-.88	-.85	-1.04	-1.02	-1.00	-.95
157	-.15	-.06	.02	.13	.13	.13	.14
158	-.19	-.17	-.19	-.24	-.30	-.32	-.41
159	.11	.13	.17	.20	.19	.21	.19
160	-.09	-.13	-.17	-.22	-.26	-.28	-.38
161	.02	.04	.06	.07	.04	.09	.08
162	-.04	-.11	-.19	-.72	-.79	-.74	-.81
163	-.02	.02	.02	0	-.02	0	0
164	-.11	-.61	-1.29	-1.04	-1.02	-1.02	-.95
165	-.02	0	-.02	-.07	-.06	-.04	-.05
166	-.15	-.63	-.79	-.85	-.85	-.83	-.78
167	-.04	0	.06	.13	.11	.09	.03
168	-.02	.02	.06	.07	.04	0	-.11
169	.15	.13	.11	.11	.09	.09	0
170	.13	.11	.08	.04	.04	.02	-.08
171	.11	.08	.04	-.20	-.21	-.19	-.27
172	.11	.08	0	-.39	-.47	-.43	-.51
173	.11	-.04	-.27	-.35	-.34	-.34	-.32
174	.06	-.27	-.71	-.76	-.77	-.74	-.73
175	.02	-.21	-.27	-.37	-.38	-.36	-.38
176	.09	-.25	-.35	-.57	-.62	-.57	-.57

Note: A line has been drawn through the pressure coefficients for which the data are doubtful.

TABLE 10.- CONTINUED

(b) Vertical tail

Orifice No. \ α	0.04	8.37	16.71	25.00	26.94	28.97	32.97
201	-1.15	-1.36	-1.33	-1.23	-1.02	-1.07	-1.16
202	-2.94	-2.98	-2.71	-1.92	-1.53	-1.22	-1.11
203	.21	.09	-.02	-.26	-.45	-.93	-1.08
204	~~-.15~~	~~-.11~~	~~-.06~~	~~-.06~~	~~-.09~~	~~-.13~~	~~-.16~~
205	.49	.40	.31	-.06	-.47	-.91	-1.05
206	~~-.02~~	~~.02~~	~~.08~~	~~.11~~	~~.06~~	~~.02~~	~~-.03~~
207	.53	.45	.23	-.11	-.51	-.91	-1.05
208	-.79	-.83	-.94	-1.09	-1.04	-.98	-.92
209	-.06	-.28	-.48	-.57	-.57	-1.00	-.97
210	-3.04	-3.28	-3.04	-2.87	-2.81	-1.89	-1.19
211	.36	.23	.11	0	-.30	-.85	-.95
212	-3.25	-2.28	-2.84	-2.94	-2.15	-1.48	-1.08
213	.36	.30	.21	.02	-.55	-.87	-.95
214	-.38	-.81	-1.13	-1.30	-1.30	-1.20	-.97
215	.40	.34	.27	-.02	-.62	-.89	-.95
216	~~-.66~~	~~-.77~~	~~-.73~~	~~-1.15~~	~~-1.17~~	~~-.89~~	~~-.95~~
217	.19	0	-.17	-.28	-.17	-.28	-.63
218	-1.28	-1.51	-1.40	-1.94	-1.81	-1.37	-.97
219	.28	.21	.17	.06	-.17	-.66	-.89
220	-1.36	-1.21	-1.19	-1.85	-1.55	-1.28	-.92
221	.19	.15	.11	-.13	-.64	-.85	-.92
222	-.62	-.72	-.79	-1.02	-1.11	-1.09	-.86
223	.19	.13	.06	-.17	-.57	-.87	-.89
224	-.55	-.66	-.77	-.89	-.98	-.93	-.78
225	.36	.09	.02	-.02	0	-.04	-.24
226	-.64	-.74	-.79	-.79	-.79	-.70	-.62
227	.06	.04	.02	-.02	-.11	-.35	-.65
228	-.81	-.85	-.83	-.74	-.87	-.78	-.62
229	~~-.02~~	~~.02~~	~~.08~~	~~.11~~	~~.06~~	~~.02~~	~~-.03~~
230	-.45	-.40	-.46	-.45	-.60	-.70	-.59
231	-.06	.06	.02	-.17	-.38	-.57	-.68
232	-.23	-.23	-.27	-.30	-.45	-.50	-.54
233	.15	.09	.04	0	0	-.04	-.16
234	-.60	-.64	-.67	-.74	-.72	-.62	-.59
235	.06	.04	.02	0	-.02	-.15	-.11
236	-.81	-1.23	-1.59	-1.77	-1.15	-.96	-.68
237	.09	.11	.06	-.02	-.30	-.57	-.78
238	-.43	-.34	-.38	-.36	-.51	-.63	-.54

Note: Lines have been drawn through the pressure coefficients for which the data are doubtful.

TABLE 10.- CONTINUED

(b) Vertical tail (Concluded)

Orifice No. \ α	0.04	8.37	16.71	25.00	26.94	28.97	72.97
239	0.09	0.06	0.04	-0.13	-0.32	-0.50	-0.68
240	-.17	-.17	-.17	-.23	-.38	-.48	-.54
241	.02	-.02	-.06	-.11	-.11	-.13	-.24
242	-.55	-.57	-.58	-.66	-.66	-.61	-.57
243	-.02	0	-.04	-.06	-.09	-.20	-.41
244	-.72	-.96	-1.19	-1.49	-1.17	-.83	-.62
245	.02	.04	.02	-.06	-.32	-.54	-.76
246	-.38	-.28	-.31	-.32	-.47	-.59	-.54
247	.09	.06	.04	-.13	-.32	-.50	-.68
248	-.09	-.09	-.11	-.15	-.11	-.41	-.51
249	-.19	-.21	-.23	-.28	-.30	-.33	-.35
250	-.53	-.53	-.52	-.57	-.62	-.59	-.59
251	-.28	-.26	-.23	-.26	-.28	-.35	-.49
252	-.55	-.51	-.46	-.51	-.53	-.54	-.54
253	-.11	-.04	-.08	-.13	-.26	-.46	-.65
254	-.23	-.13	-.15	-.19	-.30	-.44	-.54
255	.04	.04	.02	-.09	-.30	-.48	-.68
256	.04	.02	.02	-.02	-.23	-.39	-.57

TABLE 10.- CONTINUED

(c) Fuselage

Orifice No. \ α	0.04	8.37	16.71	25.00	26.94	28.97	32.97
301	-0.15	-0.38	-0.73	-1.22	-1.21	-1.23	-1.30
302	-.36	-.74	-1.00	-.98	-.98	-.96	-1.03
303	-.81	-.91	-1.04	-1.00	-1.00	-.96	-1.03
304	-.49	-.43	-.46	-.52	-.53	-.56	-.65
305	-.15	.06	.25	.44	.45	.48	.54
306	~~.23~~	~~.45~~	~~.54~~	~~.61~~	~~.60~~	~~.58~~	~~.59~~
307	.70	.66	.54	.30	.23	.19	.03
308	.34	.02	-.33	-.72	-.77	-.83	-1.00
309	-.21	-.40	-.61	-.83	-.81	-.85	-.95
310	-.30	-.21	-.21	-.28	-.30	-.33	-.43
311	-.17	-.17	-.31	-.57	-.62	-.65	-.81
312	-.28	-.40	-.61	-.83	-.85	-.90	-1.05
313	-.19	0	.19	.39	.43	.48	.57
314	.28	.47	.61	.65	.64	.65	.62
315	.49	.47	.33	.07	-.02	-.08	-.27
316	.28	-.02	-.38	-.80	-.87	-.96	-1.19
317	-.28	-.19	-.21	-.30	-.32	-.38	-.49
318	-.19	-.23	-.35	-.54	-.60	-.61	-.76
319	-.28	-.43	-.63	-.87	-.89	-.94	-1.08
320	-.43	-.40	-.33	-.26	-.23	-.21	-.16
321	.06	.28	.46	.57	.60	.61	.62
322	.32	.36	.27	.07	.02	-.04	-.19
323	.17	-.09	-.42	-.83	-.89	-.98	-1.19
324	-.34	-.36	-.33	-.44	-.45	-.48	-.62
325	-.45	-.47	-.46	-.46	-.43	-.40	-.35
326	-.11	.11	.29	.41	.45	.48	.49
327	-.64	-.74	-.83	-.93	-.89	-.90	-.95
328	0	-.09	-.25	-.57	-.64	-.65	-.73
329	-.32	-.26	-.15	-.02	0	.02	.11
330	-.15	.11	.29	.46	.49	.52	.57
331	-.30	-.34	-.35	-.41	-.40	-.42	-.49
332	-.53	-.66	-.81	-.93	-.96	-.88	-.92
333	-.36	-.32	-.19	-.02	-.02	.02	.08
334	-.26	-.09	.13	.28	.30	.31	.38
335	-.49	-.60	-.69	-.76	-.81	-.75	-.76
336	-.36	-.43	-.46	-.48	-.55	-.54	-.59

Note: A line has been drawn through the pressure coefficients for which the data are doubtful.

TABLE 10.– CONTINUED

(c) Fuselage (Concluded)

Orifice No. \ α	0.04	8.37	16.71	25.00	26.94	28.97	32.97
337	-0.36	-0.32	-0.23	-0.13	-0.13	-0.08	-0.05
338	-.26	-.09	.02	.13	.11	.13	.19
339	-.28	-.32	-.35	-.39	-.51	-.48	-.54
340	~~-2.34~~	~~-2.11~~	~~-2.27~~	~~-2.33~~	~~-2.26~~	~~-2.21~~	~~-2.73~~
341	-.21	-.19	-.15	-.09	-.11	-.08	-.05
342	-.09	-.02	.06	.11	.06	.06	.08
343	-.04	-.04	-.11	-.48	-.53	-.67	-.78
344	.04	.04	.02	-.30	-.64	-.77	-.86
345	-.04	0	.04	.07	.04	.04	.03
346	-.02	.02	.06	.09	.09	.06	.08
347	-.13	-.15	-.11	-.07	-.06	-.04	-.05
348	-.04	-.02	.06	.09	.04	.02	.03
349	.02	.04	.11	.11	.04	.02	0
350	0	0	.02	-.11	-.28	-.38	-.51
351	-.11	-.09	-.06	-.09	-.15	-.19	-.30
352	-.02	-.02	0	0	-.04	-.06	-.19
353	.30	.30	.33	.33	.28	.21	.14
354	.09	.13	.17	.16	.06	-.06	-.19
355	.04	.06	.08	-.02	-.23	-.44	-.70
356	.04	.06	.08	-.07	-.26	-.44	-.68
357	.04	.06	.08	-.04	-.26	-.44	-.68
358	~~.19~~	~~.21~~	~~.19~~	~~.16~~	~~.09~~	~~.02~~	~~-.05~~
359	-.02	.02	-.02	-.09	-.17	-.25	-.41
360	-.04	-.04	-.06	-.11	-.17	-.25	-.46
361	-.06	-.11	-.15	-.30	-.36	-.44	-.57
362	-.09	-.06	-.06	-.11	-.21	-.38	-.59
363	.02	0	.02	-.04	-.13	-.27	-.49
364	.02	.04	.06	.04	-.11	-.27	-.32
365	.06	.09	.06	.02	-.06	-.19	-.30
366	-.47	-.55	-.73	-.89	-.89	-.88	-1.03
367	-.17	.02	.25	.41	.43	.44	.78
368	-.36	-.30	-.15	0	.02	.06	.14
369	.02	-.09	.02	.07	.06	.04	0
370	0	-.09	.02	.07	.06	.04	0
371	0	.06	.11	.11	.06	.04	0
372	0	.06	.11	.11	.06	.04	0

Note: Lines have been drawn through the pressure coefficients for which the data are doubtful.

TABLE 10.- CONCLUDED

(d) Fuselage-duct rakes

Tube No. \ α	0.04	8.37	16.71	25.00	26.94	28.97	32.97
401 T.H.[a]	0.58	0.81	0.71	0.47	0.43	0.34	0.19
402 St.H.[b]	.54	.57	.50	.36	.32	.28	.16
403 T.H.	.69	.91	.87	.74	.74	.68	.59
404	- - -	- - -	- - -	- - -	- - -	- - -	- - -
405 St.H.	.40	.40	.35	.21	.19	.11	-.05
406 T.H.	.92	.94	.89	.79	.77	.72	.62
407 T.H.	1.02	.91	.83	.79	.72	.64	.54
408 St.H.	.08	.13	.11	.06	-.02	-.15	-.27
409 T.H.	.87	.87	.81	.72	.70	.64	.51
410 T.H.	.81	.81	.75	.64	.62	.53	.43
411 St.H.	.21	.15	.04	-.09	-.19	-.30	-.46
412 T.H.	.77	.77	.69	.53	.49	.38	.22
413 T.H.	.77	.74	.67	.49	.40	.28	.08
414 St.H.	.11	.09	-.02	-.36	-.55	-.77	-1.05
415 T.H.	.75	.74	.65	.40	.32	.15	-.16
416 T.H.	.75	.68	.46	.11	-.04	-.26	-.59
417 St.H.	.25	0	-.27	-.57	-.68	-.74	-.81
418 T.H.	.71	.70	.46	.28	.19	0	-.57
501 T.H.	.39	.40	.39	.30	.23	.13	.03
502 St.H.	.33	.34	.31	.26	.19	.09	-.03
503 T.H.	.42	.43	.39	.30	.23	.13	.03
504 T.H.	.42	.40	.39	.30	.23	.13	.03
505 St.H.	.33	.34	.33	.26	.19	.09	-.03
506 T.H.	.39	.38	.37	.30	.23	.13	.03
507 T.H.	.35	.38	.37	.30	.23	.15	.03
508 St.H.	.33	.34	.33	.26	.17	.09	-.03
509 T.H.	.37	.43	.39	.32	.26	.17	.05
510 T.H.	.35	.36	.33	.26	.19	.09	-.03
511 St.H.	.35	.36	.33	.26	.19	.09	-.03
512 T.H.	.35	.36	.33	.26	.19	.09	-.03
513	- - -	- - -	- - -	- - -	- - -	- - -	- - -
514 St.H.	.35	.36	.33	.26	.19	.09	-.03
515 T.H.	.35	.36	.33	.26	.19	.09	-.03
516 T.H.	.35	.36	.33	.26	.19	.09	-.03
517 St.H.	.35	.36	.33	.26	.19	.09	-.03
518	- - -	- - -	- - -	- - -	- - -	- - -	- - -
519 T.H.	.35	.36	.33	.26	.19	.09	-.03
520 St.H.	.35	.36	.33	.26	.19	.09	-.03
521 T.H.	.35	.36	.33	.26	.19	.09	-.03
522 St.H.	.35	.36	.33	.26	.19	.09	-.03
523 T.H.	.35	.36	.33	.26	.19	.09	-.03

[a]Total-head tube (coefficient given as P_t).

[b]Static-head tube (coefficient given as P_s).

TABLE 11.- PRESSURE COEFFICIENTS FOR THE FLYING MOCK-UP OF THE XP-92 AIRPLANE, $\beta = 0.13^{\circ}$, $\delta_e = -5^{\circ}$, $\delta_a = 0^{\circ}$, $\delta_r = 0^{\circ}$

(a) Wing

Orifice No. \ α	4.09	8.21	12.43	16.63	20.79	24.95	29.04	33.06
101	0.02	0.13	0.24	0.33	0.48	0.57	0.65	0.69
102	-.13	-.21	-.33	-.54	-.74	-.91	-1.38	-1.85
103	-	-	-	-	-	-	-	-
104	-	-	-	-	-	-	-	-
105	.09	.21	.28	.31	.37	.41	.42	.41
106	-.22	-.40	-.63	-1.04	-2.31	-3.72	-2.84	-1.97
107	.18	.23	.22	.04	-.13	-.22	-.23	-.26
108	-.35	-.72	-1.24	-.65	-3.72	-3.11	-2.46	-1.87
109	-.02	.06	.16	.25	-.33	.41	.46	.51
110	-.16	-.21	-.26	-.40	-.52	-.70	-.88	-.92
111	0	.09	.18	.27	.37	.46	.50	.54
112	-.20	-.30	-.41	-.56	-.67	-1.65	-1.81	-1.56
113	.04	.15	.24	.29	.37	.41	.44	.44
114	-.26	-.45	-.70	-2.38	-2.74	-2.06	-1.75	-.15
115	.16	.21	.22	.15	.11	.09	.06	.03
116	-.39	-.77	-1.33	-2.48	-2.09	-1.78	-1.50	-1.23
117	-.16	-.09	0	.08	.37	.22	.29	.36
118	-.16	-.19	-.22	-.33	-.46	-.65	-.65	-.82
119	-.11	-.04	.04	.13	.22	.30	.38	.41
120	-.18	-.21	-.28	-.42	-.57	-.76	-.96	-1.10
121	-.07	.04	.16	.23	.30	.39	.44	.46
122	-.22	-.30	-.39	-.44	-1.09	-1.52	-1.42	-1.31
123	.04	.13	.20	.27	.30	.33	.35	.36
124	-.26	-.45	-.70	-2.36	-1.67	-1.48	-1.29	-1.18
125	.11	.19	.22	.25	.24	.20	.19	.13
126	-.37	-.74	-1.43	-1.71	-1.37	-1.28	-1.11	-1.05
127	-.13	-.09	-.02	.02	.07	.13	.17	.21
128	-.13	-.17	-.20	-.29	-.44	-.57	-.63	-.82
129	-.11	-.06	0	.06	.09	.18	.42	.23
130	-.13	-.15	-.22	-.33	-.46	-.74	-.85	-1.00
131	-.11	-.04	.07	.08	.16	.20	.25	.26
132	-.18	-.23	-.33	-.40	-1.09	-1.20	-1.08	-1.10
133	-.04	.04	.16	.19	.24	.28	.29	.31
134	-.24	-.36	-.48	-1.17	-1.04	-1.04	-.96	-.97
135	.04	.17	.28	.27	.28	.28	.27	.23
136	-.35	-.66	-2.04	-.94	-.91	-.91	-.85	-.95
137	-.11	-.09	-.07	-.02	-.02	.02	.02	0
138	.02	.02	0	-.06	-.13	-.24	-.42	-.67

TABLE 11.- CONTINUED

(a) Wing (Concluded)

Orifice No. \ α	4.09	8.21	12.43	16.63	20.79	24.95	29.04	33.06
139	-0.11	-0.06	-0.04	-0.02	0	0.02	0.02	0.03
140	.07	.04	0	-.08	-.22	-.50	-.69	-.90
141	-.13	-.11	-.04	-.04	-.04	-.02	0	0
142	.02	0	-.07	-.27	-.70	-.89	-.88	-.97
143	-.11	-.02	0	.02	.04	.09	.08	.10
144	-.11	-.21	-.65	-.71	-.74	-.80	-.79	.90
145	-.07	.04	.07	.08	.09	.13	.13	.13
146	-.16	-.43	-.65	-.56	-.63	-.72	-.75	-.85
147	-.11	-.09	-.07	-.02	-.02	.02	.02	0
148	.13	.15	.16	.08	0	-.02	-.19	-.49
149	~~0~~	~~0~~	~~0~~	~~-.06~~	~~-.13~~	~~-.13~~	~~-.17~~	~~-.26~~
150	.33	.28	.20	-.02	-.18	-.41	-.65	-.85
151	-.30	-.23	-.20	-.02	-.02	.02	.02	.03
152	.30	.23	.07	-.38	-.76	-.89	-.88	-.72
153	-.35	-.26	-.22	-.19	.09	.37	.38	.36
154	-.13	-.15	-.63	-.63	-.67	-.76	-.77	-.87
155	-.04	.09	.11	.08	.11	.16	.15	.10
156	-.18	-.38	-.57	-.52	-.61	-.70	-.75	-.79
157	-.07	-.04	-.02	-.02	0	.02	0	-.03
158	.07	.04	.04	-.02	-.07	-.13	-.33	-.54
159	-.07	-.04	-.02	-.02	-.02	-.02	-.02	-.08
160	.09	.09	.04	-.02	-.16	-.46	-.67	-.85
161	-.11	-.06	-.04	-.06	-.09	-.11	-.13	-.15
162	.04	.02	-.04	-.46	-.74	-.83	-.83	-.92
163	-.13	-.06	-.04	-.06	-.07	-.02	-.04	-.03
164	-.02	-.13	-.54	-.54	-.59	-.67	-.69	-.79
165	-.13	0	.04	.02	.04	.07	.06	.05
166	-.16	-.28	-.46	-.46	-.54	-.59	-.67	-.77
167	.11	.13	.13	.13	.11	.16	.04	-.15
168	.13	.15	.18	.13	.09	.16	-.02	-.31
169	.09	.11	.11	.08	.02	-.13	-.29	-.46
170	.13	.11	.11	.08	0	-.26	-.48	-.49
171	.09	.11	.09	-.13	-.28	-.37	-.44	-.54
172	.11	.11	.09	-.31	-.54	-.65	-.73	-.85
173	.11	.11	-.04	-.15	-.20	-.24	-.31	-.38
174	.09	.06	-.22	-.35	-.44	-.54	-.65	-.72
175	0	-.04	-.11	-.21	-.24	-.28	-.35	-.41
176	.07	-.15	-.48	-.33	-.37	-.46	-.58	-.67

Note: A line has been drawn through the pressure coefficients for which the data are doubtful.

TABLE 11.– CONTINUED

(b) Vertical tail

Orifice No. \ α	4.09	8.21	12.43	16.63	20.79	24.95	29.04	33.06
201	0	-0.09	-0.09	-0.15	-0.22	-0.33	-0.39	-0.58
202	-.11	-.11	-.16	-.19	-.24	-.35	-.37	-.50
203	-.09	-.16	-.16	-.21	-.30	-.39	-.48	-.68
204	~~-.18~~	~~-.18~~	~~-.18~~	~~-.17~~	~~-.18~~	~~-.13~~	~~-.08~~	~~-.08~~
205	-.07	-.13	-.16	-.19	-.28	-.39	-.48	-.71
206	~~-.13~~	~~-.16~~	~~-.18~~	~~-.21~~	~~-.24~~	~~-.20~~	~~-.17~~	~~-.16~~
207	-.07	-.16	-.16	-.19	-.28	-.39	-.44	-.66
208	-.11	-.16	-.20	-.23	-.33	-.41	-.44	-.66
209	-.11	-.20	-.20	-.23	-.30	-.41	-.48	-.63
210	-.11	-.13	-.16	-.19	-.28	-.37	-.42	-.61
211	-.13	-.20	-.20	-.25	-.30	-.44	-.50	-.66
212	-.16	-.20	-.20	-.25	-.33	-.44	-.48	-.71
213	-.16	-.22	-.22	-.25	-.35	-.48	-.56	-.79
214	-.16	-.20	-.20	-.25	-.33	-.46	-.52	-.79
215	-.09	-.16	-.16	-.19	-.28	-.39	-.48	-.68
216	~~-.18~~	~~-.22~~	~~-.24~~	~~-.27~~	~~-.35~~	~~-.48~~	~~-.56~~	~~-.84~~
217	-.11	-.18	-.18	-.19	-.26	-.35	-.44	-.53
218	-.11	-.13	-.16	-.17	-.24	-.30	-.38	-.53
219	-.16	-.20	-.20	-.23	-.30	-.44	-.56	-.71
220	-.16	-.20	-.20	-.23	-.30	-.44	-.54	-.74
221	-.18	-.22	-.24	-.27	-.37	-.52	-.69	-.89
222	-.18	-.22	-.22	-.27	-.35	-.50	-.65	-.89
223	-.18	-.22	-.22	-.27	-.35	-.52	-.67	-.82
224	-.18	-.22	-.22	-.27	-.35	-.52	-.69	-.87
225	-.16	-.20	-.18	-.17	-.22	-.30	-.38	-.47
226	-.13	-.13	-.13	-.13	-.18	-.24	-.33	-.45
227	-.07	-.09	-.09	-.08	-.16	-.24	-.38	-.50
228	-.04	-.07	-.07	-.06	-.13	-.22	-.35	-.53
229	~~-.13~~	~~-.16~~	~~-.18~~	~~-.21~~	~~-.24~~	~~-.22~~	~~-.19~~	~~-.16~~
230	-.02	-.04	-.04	-.06	-.13	-.26	-.42	-.63
231	-.02	-.04	-.07	-.08	-.16	-.28	-.46	-.58
232	-.02	-.04	-.04	-.08	-.16	-.28	-.46	-.63
233	-.16	-.18	-.16	-.15	-.20	-.26	-.33	-.42
234	-.13	-.16	-.13	-.13	-.16	-.22	-.31	-.42
235	-.04	-.07	-.07	-.06	-.11	-.20	-.31	-.39

Note: Lines have been drawn through the pressure coefficients for which the data are doubtful.

TABLE 11. CONTINUED

(b) Vertical tail (Concluded)

Orifice No. \ α	4.09	8.21	12.43	16.63	20.79	24.95	29.04	33.06
236	-0.11	-0.13	-0.13	-0.15	-0.20	-0.26	-0.35	-0.50
237	.04	0	-.02	-.02	-.09	-.18	-.35	-.47
238	.04	.02	0	0	-.07	-.16	-.33	-.53
239	0	-.02	-.02	-.04	-.11	-.24	-.38	-.50
240	-.02	-.04	-.04	-.04	-.11	-.26	-.42	-.55
341	-.13	-.16	-.16	-.15	-.20	-.24	-.25	-.39
342	-.11	-.13	-.11	-.13	-.16	-.20	-.27	-.39
243	-.02	-.04	-.04	-.04	-.09	-.16	-.25	-.32
244	-.02	-.04	-.04	-.06	-.09	-.18	-.25	-.37
245	.02	.02	0	0	-.07	-.18	-.33	-.47
246	.04	.02	.02	.02	-.04	-.16	-.29	-.47
247	.02	.02	.02	0	-.07	-.18	-.33	-.45
248	.02	.02	.02	0	-.07	-.18	-.33	-.47
249	-.07	-.09	-.09	-.08	-.13	-.20	-.25	-.34
250	-.07	-.11	-.09	-.11	-.16	-.20	-.27	-.37
251	.09	.07	.07	.06	.02	-.04	-.15	-.26
252	.09	.07	.09	.06	.02	-.04	-.15	-.26
253	.09	.07	.07	.06	0	-.09	-.23	-.37
254	.11	.11	.11	.08	.04	-.04	-.17	-.32
255	.09	.07	.07	.06	-.02	-.11	-.25	-.39
256	.11	.09	.09	.08	.02	-.09	-.23	-.37

TABLE 11.- CONTINUED

(c) Fuselage

Orifice No. \ α	4.09	8.21	12.43	16.63	20.79	24.95	29.04	33.06
301	0.16	0.07	-0.04	-0.19	-0.54	-0.85	-1.04	-1.10
302	.20	.11	0	-.15	-.39	-.64	-.96	-1.10
303	.26	.19	.13	.02	-.18	-.30	-.50	-.67
304	.35	.40	.40	.44	.44	.43	.38	.36
305	.39	.47	.55	.65	.72	.79	.85	.92
306	~~.28~~	~~.32~~	~~.32~~	~~.33~~	~~.30~~	~~.28~~	~~.21~~	~~.15~~
307	.28	.26	.38	.08	-.09	-.21	-.40	-.56
308	.20	.09	-.02	-.17	-.41	-.77	-1.15	-1.18
309	.07	.02	-.04	-.11	-.18	-.19	-.25	-.33
310	.07	0	-.06	-.17	-.30	-.38	-.52	-.64
311	.09	.02	-.04	-.17	-.35	-.51	-.75	-.97
312	.16	.17	.17	.17	.13	.11	.04	-.05
313	.20	.28	.32	.42	.48	.55	.61	.67
314	.16	.17	.38	.15	.04	0	.13	-.23
315	.13	.09	.02	-.08	-.26	-.40	-.63	-.85
316	.09	.02	-.04	-.17	-.30	-.43	-.61	-.92
317	0	-.04	-.11	-.21	-.35	-.43	-.56	-.67
318	.20	-.04	-.11	-.23	-.41	-.53	-.54	-.97
319	.04	.04	.06	.04	-.02	-.02	-.11	-.18
320	.07	.13	.17	.25	.33	.40	.48	.56
321	.04	.09	.09	.08	.02	0	-.06	-.10
322	0	-.02	-.09	-.19	-.33	-.45	-.67	-.87
323	-.02	-.06	-.13	-.23	-.35	-.45	-.61	-.69
324	-.16	-.19	-.21	-.27	-.35	-.35	-.50	-.56
325	-.02	.02	.06	.13	.18	.26	.29	.41
326	-.07	-.04	-.04	-.06	-.09	-.13	-.19	-.23
327	-.33	-.36	-.40	-.44	-.48	-.49	-.52	-.51
328	-.07	-.15	-.23	-.35	-.50	-.60	-.79	-.90
329	.02	.06	.11	.19	.24	.36	.42	.51
330	0	.02	.02	.02	-.02	-.04	-.15	-.10
331	.07	.04	.02	-.04	-.11	-.13	-.21	-.33
332	-.13	-.19	-.26	-.42	-.65	-.89	-.98	-1.21
333	-.18	-.11	-.02	.04	.11	.21	.27	.31
334	-.11	-.04	.04	.13	.18	.28	.31	.36
335	-.13	-.17	-.23	-.31	-.46	-.55	-.77	-1.03
336	-.04	-.06	-.09	-.13	-.22	-.28	-.61	-.85
337	-.13	-.11	-.04	0	.04	.13	.15	.18
338	-.13	-.09	-.02	.02	.07	.15	.17	.18
339	-.02	-.02	-.02	-.06	-.16	-.26	-.52	-.72
340	~~2.72~~	~~2.68~~	~~2.64~~	~~2.65~~	~~2.70~~	~~2.66~~	~~2.63~~	~~3.10~~

Note: Lines have been drawn through the pressure coefficients for which the data are doubtful.

TABLE 11.- CONTINUED

(c) Fuselage (Concluded)

Orifice No. \ α	4.09	8.21	12.43	16.63	20.79	24.95	29.04	33.06
341	-0.04	0	0.02	0.04	0.07	0.11	0.11	0.08
342	-.04	-.02	0	.04	.04	.11	.08	.05
343	-.04	-.06	-.06	-.17	-.33	-.32	-.50	-.67
344	-.02	-.04	-.04	-.06	-.18	-.26	-.50	-.69
345	-.04	-.02	0	0	0	.04	0	-.05
346	-.02	0	.02	.04	.04	.09	.04	0
347	.02	.02	.04	.06	.07	.11	.08	.05
348	0	0	.02	.04	.04	.09	.04	0
349	-.02	0	0	.02	.02	.06	.02	-.03
350	.07	.09	.09	.06	.02	.02	-.08	-.21
351	.07	.06	.06	.06	.04	.02	-.08	-.21
352	.07	.06	.09	.08	.07	.09	-.04	-.18
353	-.04	.04	.06	.06	.04	.09	.02	-.05
354	-.04	.06	.06	.06	.04	.06	-.04	-.21
355	.07	.06	.06	.06	.04	.04	-.04	-.21
356	.09	.09	.06	.06	.02	.02	-.06	-.23
357	.09	.09	.09	.06	0	-.02	-.13	-.26
358	~~.37~~	~~.38~~	~~.36~~	~~.33~~	~~.30~~	~~.26~~	~~.17~~	~~.10~~
359	.07	.06	.06	.06	.02	0	-.08	-.18
360	.02	0	0	-.02	.04	-.06	-.19	-.36
361	-.13	-.15	-.17	-.21	-.22	-.21	-.27	-.36
362	0	0	-.02	-.04	-.09	-.11	-.25	-.44
363	.04	.04	.04	.04	.02	0	-.08	-.21
364	.11	.11	.11	.08	.07	0	-.04	-.13
365	.13	.13	.11	.11	.09	.11	.06	.05
366	-.09	-.15	-.21	-.31	-.52	-.79	-1.13	-1.38
367	.02	.06	.13	.21	.30	.38	.42	.46
368	.02	.04	.13	.21	.28	.38	.44	.49
369	.11	.15	.17	.21	.22	.26	.23	.21
370	.11	.15	.17	.21	.22	.26	.23	.21
371	.16	.17	.19	.21	.20	.21	.17	.10
372	.16	.17	.19	.21	.20	.21	.17	.10

Note: A line has been drawn through the pressure coefficients for which the data are doubtful.

TABLE 11.- CONCLUDED

(d) Fuselage-duct rakes

Tube No. \ α	4.09	8.21	12.43	16.63	20.79	24.95	29.04	33.06
401 T.H.[a]	0.98	0.98	0.98	0.98	0.94	0.87	0.78	0.62
402 St.H.[b]	.13	.13	.07	.11	.13	.13	.06	-.10
403 T.H.	.98	.98	.98	.98	.94	.89	.82	.69
404	- - -	- - -	- - -	- - -	- - -	- - -	- - -	- - -
405 St.H.	.18	.17	.09	.08	.09	.09	.04	-.15
406 T.H.	.98	.98	.98	.96	.91	.85	.76	.62
407 T.H.	.98	.98	.98	.96	.91	.85	.76	.62
408 St.H.	.22	.19	.13	.15	.19	.15	.04	-.10
409 T.H.	.98	.98	.98	.98	.91	.85	.78	.64
410 T.H.	.98	.98	.98	.98	.96	.91	.76	.74
411 St.H.	.18	.13	.13	.13	.11	.11	.04	-.21
412 T.H.	.98	.98	.98	.96	.91	.85	.73	.59
413 T.H.	.98	.98	.98	.98	.89	.88	.86	.69
414 St.H.	.09	.02	.02	-.02	-.11	-.26	-.49	-.77
415 T.H.	.98	.98	.96	.91	.83	.72	.57	.36
416 T.H.	.98	.96	.96	.93	.87	.77	.12	.05
417 St.H.	-.11	-.15	-.07	-.13	-.15	-.32	-.51	-.49
418 T.H.	.98	.91	.84	.70	.57	.51	.08	-.41
501 T.H.	.78	.79	.72	.61	.55	.47	.37	-.05
502 St.H.	.76	.72	.67	.61	.53	.45	.35	.21
503 T.H.	.80	.81	.74	.63	.55	.47	.37	-.03
504 T.H.	.80	.81	.76	.63	.55	.47	.39	-.03
505 St.H.	.76	.72	.67	.61	.53	.45	.35	.21
506 T.H.	.80	.81	.74	.63	.57	.49	.39	-.03
507 T.H.	.78	.79	.72	.63	.57	.49	.39	-.03
508 St.H.	.74	.72	.67	.61	.51	.45	.35	.21
509 T.H.	.82	.77	.72	.63	.57	.49	.39	-.03
510 T.H.	.84	.81	.74	.63	.55	.47	.37	-.05
511 St.H.	.76	.72	.67	.61	.53	.45	.35	.21
512 T.H.	.87	.85	.78	.65	.57	.49	.37	-.03
513	- - -	- - -	- - -	- - -	- - -	- - -	- - -	- - -
514 St.H.	.76	.72	.67	.61	.53	.45	.35	.21
515 T.H.	.93	.85	.78	.67	.60	.49	.39	-.03
516 T.H.	.91	.85	.78	.67	.60	.49	.39	-.03
517 St.H.	.74	.72	.67	.61	.53	.45	.35	.21
518	- - -	- - -	- - -	- - -	- - -	- - -	- - -	- - -
519 T.H.	.89	.85	.78	.67	.57	.49	.39	-.03
520 St.H.	.74	.72	.67	.61	.53	.45	.35	.21
521 T.H.	.82	.79	.72	.63	.55	.49	.37	-.05
522 St.H.	.74	.72	.67	.61	.51	.45	.35	.21
523 T.H.	.74	.72	.67	.59	.51	.43	.35	-.05

[a]Total-head tube (coefficient given as P_t).

[b]Static-head tube (coefficient given as P_s).

TABLE 12.– PRESSURE COEFFICIENTS FOR THE FLYING MOCK-UP OF THE XP-92 AIRPLANE, $\beta = 0.13^{\circ}$, $\delta_e = -10^{\circ}$, $\delta_a = 0^{\circ}$, $\delta_r = 0^{\circ}$

(a) Wing

Orifice No. \ α	8.15	12.32	16.51	20.69	24.86	28.96	33.01
101	0.11	0.23	0.33	0.47	0.56	0.63	0.67
102	-.21	-.31	-.48	-.68	-.90	-1.33	-1.82
103	–	–	–	–	–	–	–
104	–	–	–	–	–	–	–
105	.21	.29	.31	.38	.40	.41	.44
106	-.38	-.63	-.94	-2.17	-3.56	-2.74	-2.05
107	.26	.21	.08	-.09	-.17	-.22	-.23
108	-.72	-1.19	-2.36	-3.49	-2.98	-2.39	-1.87
109	.04	.13	.23	.32	.40	.44	.49
110	-.19	-.25	-.33	-.47	-.67	-.85	-.92
111	.06	.17	.27	.36	.44	.50	.51
112	-.28	-.38	-.52	-.64	-1.59	-1.74	-1.56
113	.15	.23	.31	.36	.40	.41	.41
114	-.43	-.65	-1.79	-2.45	-1.98	-1.67	-1.44
115	.21	.21	.19	.15	.08	.07	.05
116	-.74	-1.25	-2.46	-1.89	-1.62	-1.43	-1.21
117	-.11	-.02	.06	.15	.21	.28	.33
118	-.17	-.19	-.25	-.38	-.58	-.65	-.82
119	-.06	.02	.11	.21	.29	.35	.38
120	-.19	-.25	-.33	-.51	-.69	-.93	-1.08
121	.02	.11	.21	.30	.35	.41	.46
122	-.26	-.35	-.40	-1.00	-1.46	-1.39	-1.31
123	.11	.19	.27	.32	.31	.35	.36
124	-.40	-.63	-2.15	-1.49	-1.38	-1.24	-1.18
125	.17	.21	.27	.28	.21	.20	.13
126	-.68	-1.25	-1.65	-1.19	-1.19	-1.09	-1.05
127	-.13	-.08	-.02	.04	.08	.13	.18
128	-.11	-.13	-.21	-.32	-.52	-.61	-.79
129	-.11	-.04	.02	.09	.13	.20	.21
130	-.11	-.15	-.25	-.38	-.65	-.83	-1.00
131	-.09	0	.06	.13	.17	.22	.23
132	-.17	-.25	-.38	-.96	-1.08	-1.09	-1.10
133	0	.11	.17	.21	.25	.30	.31
134	-.32	-.42	-1.04	-.89	-.96	-.96	-.97
135	.15	.25	.27	.28	.27	.26	.23
136	-.55	-2.04	-.79	-.77	-.85	-.83	-.95
137	-.21	-.17	-.13	-.11	-.08	-.09	-.10
138	.11	.11	.06	-.02	-.11	-.28	-.54
139	-.21	-.15	-.13	-.11	-.08	-.07	-.08
140	.15	.11	.06	-.11	-.38	-.63	-.85

TABLE 12.– CONTINUED

(a) Wing (Concluded)

Orifice No. \ α	8.15	12.32	16.51	20.69	24.86	28.96	33.01
141	-0.23	-0.19	-0.15	-0.13	-0.13	-0.13	-0.13
142	.13	.06	-.08	-.57	-.79	-.87	-.97
143	-.13	-.08	-.08	-.04	-.02	0	.03
144	-.06	-.42	-.56	-.60	-.71	-.78	-.85
145	-.06	0	0	.04	.06	.09	.10
146	-.21	-.54	-.46	-.53	-.65	-.72	-.79
147	-.43	-.40	-.35	-.32	-.29	-.30	-.33
148	.28	.27	.25	.17	.11	0	-.28
149	~~-.13~~	~~-.13~~	~~-.17~~	~~-.21~~	~~-.27~~	~~-.33~~	~~-.38~~
150	-.02	-.04	-.11	-.26	-.35	-.54	-.77
151	-.68	-.61	-.56	-.51	-.46	-.46	-.56
152	.34	-.19	-.15	-.55	-.73	-.80	-.92
153	-.64	-.52	-.52	-.49	-.44	-.35	-.15
154	.02	-.42	-.46	-.53	-.65	-.72	-.82
155	-.11	0	.04	-.04	-.17	-.16	-.13
156	-.21	-.42	-.40	-.47	-.58	-.74	-.87
157	-.15	-.13	-.11	-.11	-.11	-.11	-.15
158	.13	.13	.11	.04	.02	-.16	-.41
159	-.15	-.13	-.11	-.11	-.13	-.16	-.21
160	.17	.15	.11	-.02	-.33	-.61	-.79
161	-.17	-.15	-.15	-.17	-.21	-.22	-.23
162	.13	.08	-.31	-.62	-.75	-.80	-.90
163	-.19	-.13	-.17	-.15	-.15	-.13	-.15
164	0	-.46	-.40	-.49	-.58	-.67	-.74
165	-.13	-.08	-.08	-.02	-.02	-.02	-.03
166	-.15	-.31	-.33	-.43	-.54	-.65	-.72
167	.11	.11	.11	.11	.11	-.04	-.13
168	.15	.17	.17	.11	.17	-.04	-.21
169	.11	.11	.08	.04	-.13	-.28	-.49
170	.13	.13	.11	.04	-.21	-.46	-.69
171	.09	.08	-.11	-.26	-.38	-.46	-.54
172	.11	.08	-.21	-.43	-.58	-.67	-.79
173	.09	0	-.08	-.17	-.23	-.33	-.38
174	.09	-.13	-.21	-.32	-.44	-.57	-.67
175	0	-.04	-.11	-.19	-.27	-.35	-.41
176	.04	-.06	-.15	-.30	-.38	-.52	-.59

Note: A line has been drawn through the pressure coefficients for which the data are doubtful.

TABLE 12.– CONTINUED

(b) Vertical tail

Orifice No. \ α	8.15	12.32	16.51	20.69	24.86	28.96	33.01
201	-0.04	-0.06	-0.13	-0.20	-0.31	-0.35	-0.71
202	-.11	-.15	-.15	-.24	-.37	-.39	-.45
203	-.13	-.15	-.19	-.28	-.39	-.44	-.79
204	~~.17~~	~~.17~~	~~.17~~	~~.16~~	~~.08~~	~~.07~~	~~0~~
205	-.11	-.13	-.17	-.26	-.37	-.44	-.79
206	~~.13~~	~~.17~~	~~.19~~	~~.20~~	~~.15~~	~~.18~~	~~.08~~
207	-.11	-.13	-.17	-.28	-.37	-.41	-.76
208	-.15	-.17	-.19	-.30	-.41	-.46	-.63
209	-.13	-.15	-.19	-.28	-.39	-.46	-.68
210	-.15	-.15	-.15	-.26	-.37	-.44	-.61
211	-.15	-.17	-.21	-.30	-.41	-.48	-.71
212	-.17	-.19	-.21	-.30	-.43	-.52	-.71
213	-.17	-.19	-.23	-.33	-.47	-.54	-.82
214	-.17	-.19	-.21	-.30	-.45	-.54	-.79
215	-.11	-.13	-.15	-.26	-.37	-.46	-.71
216	~~-.19~~	~~-.21~~	~~-.23~~	~~-.35~~	~~-.47~~	~~-.59~~	~~-.84~~
217	-.09	-.13	-.15	-.24	-.35	-.37	-.55
218	-.11	-.15	-.13	-.22	-.33	-.41	-.55
219	-.15	-.17	-.19	-.28	-.43	-.52	-.74
220	-.15	-.17	-.19	-.28	-.41	-.54	-.74
221	-.19	-.19	-.21	-.33	-.51	-.65	-.89
222	-.19	-.19	-.21	-.33	-.49	-.65	-.89
223	-.17	-.17	-.21	-.33	-.51	-.65	-.84
224	-.17	-.19	-.21	-.33	-.51	-.70	-.89
225	-.15	-.15	-.15	-.20	-.29	-.35	-.47
226	-.11	-.13	-.11	-.18	-.27	-.33	-.45
227	-.04	-.04	-.04	-.13	-.27	-.33	-.50
228	-.04	-.04	-.04	-.11	-.27	-.33	-.50
229	~~-.15~~	~~.17~~	~~.19~~	~~.22~~	~~.15~~	~~.18~~	~~.08~~
230	-.02	-.02	-.04	-.11	-.25	-.37	-.61
231	-.02	-.02	-.04	-.11	-.27	-.39	-.55
232	-.02	-.02	-.04	-.11	-.27	-.41	-.58
233	-.13	-.13	-.13	-.18	-.27	-.28	-.42
234	-.13	-.13	-.11	-.16	-.25	-.30	-.42
235	-.04	-.04	-.04	-.09	-.19	-.26	-.39

Note: Lines have been drawn through the pressure coefficients for which the data are doubtful.

TABLE 12.- CONTINUED

(b) Vertical tail (Concluded)

Orifice No. \ α	8.15	12.32	16.51	20.69	24.86	28.96	33.01
236	-0.11	-0.13	-0.13	-0.20	-0.27	-0.35	-0.47
237	.02	.02	.02	-.04	-.17	-.28	-.47
238	.02	.02	.02	-.04	-.17	-.28	-.50
239	.02	.02	.02	-.07	-.21	-.28	-.47
240	0	0	-.02	-.09	-.23	-.37	-.50
241	-.13	-.13	-.13	-.18	-.25	-.28	-.42
242	-.11	-.11	-.11	-.16	-.23	-.26	-.39
243	0	0	-.02	-.07	-.17	-.20	-.34
244	-.04	-.04	-.04	-.09	-.17	-.22	-.37
245	.02	.02	.02	-.04	-.17	-.26	-.45
246	.04	.06	.04	-.02	-.17	-.26	-.45
247	.04	.06	.04	-.02	-.17	-.26	-.42
248	.04	.06	.04	-.02	-.17	-.28	-.45
249	-.06	-.06	-.06	-.11	-.19	-.24	-.34
250	-.09	-.09	-.08	-.13	-.21	-.26	-.37
251	.09	.09	.08	.04	-.06	-.11	-.24
252	.11	.09	.11	.04	-.06	-.11	-.24
253	.09	.09	.08	.02	-.11	-.20	-.34
254	.13	.11	.11	.07	-.06	-.16	-.32
255	.11	.09	.08	.02	-.11	-.20	-.34
256	.13	.13	.13	.04	-.08	-.18	-.34

TABLE 12.– CONTINUED

(c) Fuselage

Orifice No. \ α	8.15	12.32	16.51	20.69	24.06	28.96	33.01
301	0.06	-0.04	-0.19	-0.50	-0.87	-1.04	-1.13
302	.11	0	-.17	-.37	-.66	-.96	-1.13
303	.21	.13	-.02	-.16	-.32	-.50	-.68
304	.40	.42	.40	.41	.43	.39	.34
305	.46	.54	.62	.72	.81	.85	.92
306	~~.31~~	~~.33~~	~~.32~~	~~.30~~	~~.28~~	~~.22~~	~~.16~~
307	.25	.19	.06	-.07	-.23	-.39	-.58
308	.11	0	-.17	-.39	-.81	-1.15	-1.24
309	.02	-.04	-.13	-.18	-.23	-.26	-.32
310	.02	-.06	-.17	-.28	-.40	-.50	-.63
311	.04	-.04	-.15	-.35	-.53	-.74	-1.00
312	.19	.19	.15	.13	.09	.02	-.05
313	.27	.31	.38	.48	.55	.61	.68
314	.19	.17	.13	.07	-.02	-.11	-.21
315	.08	.02	-.09	-.26	-.43	-.63	-.84
316	.04	-.04	-.17	-.30	-.45	-.61	-.79
317	-.04	-.11	-.21	-.33	-.45	-.54	-.66
318	-.04	-.11	-.26	-.39	-.55	-.76	-.97
319	.06	.06	.02	0	-.04	-.11	-.18
320	.11	.19	.23	.33	.40	.50	.58
321	.08	.08	.06	.04	0	-.04	-.11
322	-.02	-.06	-.19	-.33	-.47	-.67	-.87
323	-.06	-.13	-.23	-.35	-.47	-.61	-.74
324	-.40	-.21	-.30	-.35	-.43	-.48	-.58
325	0	.06	.11	.18	.26	.33	.42
326	-.04	-.04	-.09	-.09	-.15	-.18	-.24
327	-.35	-.40	-.45	-.48	-.51	-.50	-.53
328	-.15	-.21	-.34	-.48	-.64	-.76	-.89
329	.06	.11	.17	.24	.34	.41	.50
330	.02	.04	0	-.02	-.09	-.09	-.11
331	.04	.02	-.04	-.09	-.15	-.20	-.32
332	-.15	-.23	-.40	-.61	-.89	-.93	-1.21
333	-.13	-.06	0	.09	.17	.24	.32
334	-.06	0	.06	.16	.23	.30	.34
335	-.13	-.19	-.28	-.39	-.51	-.72	-1.00
336	0	-.02	-.09	-.16	-.30	-.52	-.76
337	-.15	-.08	-.06	0	.06	.11	.16
338	-.15	-.08	-.04	.02	.09	.13	.16
339	.02	.02	-.02	-.11	-.21	-.39	-.61
340	~~2.65~~	~~2.65~~	~~2.66~~	~~2.67~~	~~2.68~~	~~2.67~~	~~3.16~~

Note: Lines have been drawn through the pressure coefficients for which the data are doubtful.

TABLE 12.- CONTINUED

(c) Fuselage (Concluded)

Orifice No. \ α	8.15	12.32	16.51	20.69	24.06	28.96	33.01
341	-0.06	-0.04	-0.02	0.02	0.04	0.07	0.05
342	-.11	-.06	-.04	-.02	0	0	0
343	.02	0	-.04	-.22	-.19	-.30	-.53
344	.02	0	-.02	-.11	-.21	-.39	-.58
345	-.11	-.08	-.11	-.09	-.06	-.11	-.16
346	-.06	-.04	-.04	-.04	0	-.02	-.05
347	-.02	0	0	.02	.04	.04	.05
348	-.06	-.06	-.04	-.02	0	-.02	-.05
349	-.11	-.08	-.09	-.04	-.02	-.07	-.11
350	.08	.08	.06	.04	.02	-.04	-.16
351	.04	.04	.02	.04	.04	-.04	-.13
352	.04	.04	.02	.02	.02	-.04	-.16
353	.02	.02	.02	.04	.06	.04	0
354	.02	.02	0	.02	.02	-.04	-.18
355	.02	.04	.02	.04	.02	-.02	-.16
356	.08	.08	.04	.02	.02	-.04	-.16
357	.11	.11	.06	.02	0	-.07	-.18
358	~~.40~~	~~.38~~	~~.32~~	~~.28~~	~~.26~~	~~.16~~	~~.05~~
359	.06	.04	.04	.02	.06	-.07	-.16
360	0	-.02	-.04	-.07	-.11	-.24	-.32
361	-.19	-.21	-.23	-.24	-.47	-.30	-.34
362	-.02	-.04	-.09	-.09	-.13	-.26	-.42
363	.04	.04	.02	.02	0	-.09	-.16
364	.08	.08	.06	.06	.02	-.02	-.08
365	.13	.11	.09	.09	.11	.07	-.03
366	-.13	-.19	-.34	-.50	-.79	-1.13	-1.37
367	.04	.11	.19	.28	.38	.41	.47
368	.02	.11	.17	.26	.38	.41	.47
369	.15	.17	.17	.20	.23	.22	.21
370	.15	.17	.17	.20	.23	.22	.21
371	.15	.17	.17	.18	.19	.28	.11
372	.15	.17	.17	.18	.19	.28	.08

Note: A line has been drawn through the pressure coefficients for which the data are doubtful.

TABLE 12.– CONCLUDED

(d) Fuselage-duct rakes

Tube No. \ α	8.15	12.32	16.51	20.69	24.66	28.96	33.01
401 T. H.[a]	0.98	0.98	.96	0.94	0.89	0.78	0.63
402 St. H.[b]	.06	.06	.11	.11	.09	.02	.03
403 T. H.	.98	.98	.96	.94	.91	.80	.74
404	---	---	---	---	---	---	---
405 St. H.	.13	.08	.08	.09	.06	0	-.05
406 T. H.	.98	.98	.96	.94	.87	.70	.66
407 T. H.	.98	.98	.96	.91	.85	.70	.66
408 St. H.	.17	.12	.13	.19	.09	.02	0
409 T. H.	.98	.98	.96	.94	.87	.78	.68
410 T. H.	.98	.98	.96	.96	.94	.84	.79
411 St. H.	.11	.12	.13	.11	.06	-.07	-.08
412 T. H.	.98	.98	.96	.91	.85	.72	.63
413 T. H.	.98	.98	.96	.94	.89	.84	.71
414 St. H.	-.02	0	-.04	-.11	-.30	-.50	-.68
415 T. H.	.98	.96	.92	.83	.72	.56	.39
416 T. H.	.96	.94	.92	.87	.74	.09	.11
417 St. H.	-.21	-.08	-.15	-.17	-.36	-.54	-.66
418 T. H.	.92	.75	.71	.57	.49	.07	-.37
501 T. H.	.77	.71	.60	.55	.47	.35	.26
502 St. H.	.71	.67	.52	.53	.43	.33	.34
503 T. H.	.79	.75	.62	.55	.47	.35	.26
504 T. H.	.79	.75	.62	.55	.47	.37	.26
505 St. H.	.71	.67	.58	.53	.43	.33	.32
506 T. H.	.79	.73	.62	.55	.49	.37	.26
507 T. H.	.77	.71	.62	.57	.49	.37	.26
508 St. H.	.69	.67	.58	.53	.43	.33	.32
509 T. H.	.77	.71	.65	.57	.49	.37	.26
510 T. H.	.79	.73	.65	.55	.47	.35	.24
511 St. H.	.71	.67	.58	.53	.43	.33	.34
512 T. H.	.83	.77	.67	.57	.49	.37	.26
513	---	---	---	---	---	---	---
514 St. H.	.71	.67	.58	.53	.43	.33	.34
515 T. H.	.85	.77	.67	.60	.49	.37	.26
516 T. H.	.85	.77	.67	.60	.49	.37	.26
517 St. H.	.69	.67	.58	.53	.43	.33	.34
518	---	---	---	---	---	---	---
519 T. H.	.83	.79	.67	.60	.49	.37	.26
520 St. H.	.69	.67	.58	.53	.45	.33	.34
521 T. H.	.77	.73	.62	.55	.47	.37	.24
522 St. H.	.69	.67	.58	.53	.43	.33	.32
523 T. H.	.71	.67	.60	.51	.45	.33	.21

[a]Total-head tube (coefficient given as P_t).

[b]Static-head tube (coefficient given as P_s).

TABLE 13.- PRESSURE COEFFICIENTS FOR THE FLYING MOCK-UP OF THE XP-92 AIRPLANE, $\beta = 0.13^{\circ}$, $\delta_e = -20^{\circ}$, $\delta_a = 0^{\circ}$, $\delta_r = 0^{\circ}$

(a) Wing

Orifice No. \ α	12.09	16.22	20.48	24.66	28.78	32.86
101	0.21	0.32	0.45	0.54	0.63	0.68
102	-.29	-.43	-.62	-.80	-1.31	-1.62
103	—	—	—	—	—	—
104	—	—	—	—	—	—
105	.27	.32	.40	.44	.44	.43
106	-.54	-.87	-1.94	-3.00	-2.19	-1.73
107	.23	.11	-.02	-.09	-.11	-.14
108	-1.08	-1.98	-3.23	-2.54	-1.96	-1.86
109	.11	.19	.30	.37	.44	.49
110	-.21	-.28	-.40	-.57	-.71	-.81
111	.15	.23	.34	.41	.48	.51
112	-.31	-.47	-.57	-1.39	-1.46	-1.32
113	.21	.30	.36	.41	.42	.43
114	-.56	-1.21	-2.17	-1.59	-1.36	-1.22
115	.23	.19	.19	.16	.13	.08
116	-1.08	-2.34	-1.72	-1.33	-1.56	-1.05
117	-.08	0	.09	.18	.23	.30
118	-.13	-.19	-.32	-.50	-.52	-.73
119	-.02	.06	.15	.24	.31	.38
120	-.17	-.26	-.43	-.59	-.77	-.95
121	.06	.17	.26	.33	.40	.43
122	-.27	-.34	-.85	-1.17	-1.13	-1.11
123	.17	.23	.28	.30	.33	.35
124	-.50	-1.77	-1.26	-1.09	-1.00	-1.00
125	.21	.26	.28	.24	.23	.19
126	-.96	-1.49	-1.02	-.93	-.85	-.89
127	-.19	-.11	-.07	0	.04	.08
128	-.02	-.09	-.21	-.39	-.50	-.68
129	-.15	-.09	-.02	.04	.11	.14
130	-.02	-.11	-.06	-.52	-.69	-.86
131	-.11	-.02	.02	.11	.15	.16
132	-.11	-.23	-.77	-.85	-.85	-.92
133	.04	.09	.15	.20	.23	.27
134	-.29	-.74	-.70	-.74	-.73	-.81
135	.21	.21	.26	.26	.25	.24
136	-1.11	-.57	-.60	-.65	-.65	-.78
137	-.46	-.40	-.38	-.33	-.33	-.32
138	.29	.26	.19	.11	-.11	-.38
139	-.42	-.38	-.36	-.33	-.33	-.32
140	.31	.26	.13	-.18	-.48	-.68

TABLE 13.- CONTINUED

(a) Wing (Concluded)

Orifice No. \ α	12.09	16.22	20.48	24.66	28.78	32.86
141	-0.48	-0.43	-0.43	-0.39	-0.40	-0.38
142	.29	.13	-.36	-.57	-.69	-.81
143	-.23	-.26	-.26	-.22	-.21	-.19
144	.13	-.38	-.45	-.54	-.61	-.73
145	-.17	-.15	-.11	-.07	-.04	-.02
146	-.31	-.28	-.38	-.26	-.56	-.68
147	-1.31	-1.26	-1.23	-1.17	-1.25	-1.30
148	.17	.13	.13	.09	.02	-.08
149	~~-.40~~	~~-.43~~	~~-.49~~	~~-.52~~	~~-.63~~	~~-.73~~
150	-.31	-.36	-.53	-.57	-.63	-.70
151	-1.52	-1.57	-1.62	-1.61	-1.71	-1.73
152	-.54	-.68	-.49	-.54	-.63	-.78
153	-1.25	-1.32	-1.36	-1.30	-1.36	-1.35
154	-.52	-.43	-.45	-.50	-.56	-.65
155	-.31	-.40	-.36	-.28	-.31	-.35
156	-.11	-.23	-.32	-.44	-.54	-.65
157	-.42	-.40	-.38	-.37	-.40	-.46
158	.31	.32	.23	.24	.02	-.24
159	-.42	-.38	-.36	-.37	-.42	-.49
160	.33	.28	.21	-.13	-.46	-.68
161	-.42	-.43	-.45	-.44	-.48	-.51
162	-.27	-.09	-.43	-.57	-.65	-.76
163	-.46	-.45	-.40	-.39	-.40	-.41
164	-.02	-.21	-.32	-.44	-.54	-.65
165	-.33	-.30	-.26	-.22	-.23	-.24
166	-.04	-.15	-.26	-.41	-.50	-.59
167	0	.06	.06	.11	0	-.11
168	.21	.21	.17	.24	.11	-.11
169	.04	.06	.04	-.13	-.31	-.49
170	.15	.15	.11	-.16	-.40	-.62
171	0	-.06	-.23	-.30	-.42	-.51
172	.08	-.11	-.32	-.44	-.56	-.70
173	.02	-.04	-.09	-.16	-.29	-.41
174	0	-.06	-.15	-.28	-.44	-.54
175	-.06	-.09	-.11	-.18	-.40	-.41
176	.11	.06	-.04	-.18	-.46	-.54

Note: A line has been drawn through the pressure coefficients for which the data are doubtful.

TABLE 13.– CONTINUED

(b) Vertical tail

Orifice No. \ α	12.09	16.22	20.48	24.66	28.78	32.86
201	-0.04	-0.09	-0.17	-0.24	-0.30	-0.64
202	-.08	-.13	-.19	-.27	-.33	-.44
203	-.11	-.16	-.23	-.31	-.39	-.72
204	~~.04~~	~~.13~~	~~.13~~	~~.11~~	~~.04~~	~~-.03~~
205	-.08	-.13	-.21	-.31	-.37	-.72
206	~~.02~~	~~.16~~	~~.17~~	~~.18~~	~~.13~~	~~.06~~
207	-.08	-.16	-.21	-.29	-.37	-.67
208	-.13	-.18	-.26	-.33	-.39	-.61
209	-.11	-.16	-.23	-.31	-.48	-.61
210	-.08	-.13	-.19	-.27	-.37	.31
211	-.11	-.16	-.23	-.33	-.44	-.64
212	-.13	-.18	-.23	-.33	-.44	-.64
213	-.13	-.18	-.28	-.38	-.48	-.75
214	-.13	-.18	-.26	-.36	-.48	-.72
215	-.06	-.11	-.19	-.29	-.39	-.64
216	~~-.15~~	~~-.20~~	~~-.28~~	~~-.40~~	~~-.52~~	~~-.78~~
217	-.06	-.11	-.17	-.24	-.35	-.53
218	-.08	-.11	-.15	-.21	-.35	-.50
219	-.08	-.13	-.21	-.31	-.48	-.69
220	-.08	-.13	-.19	-.31	-.48	-.69
221	-.11	-.16	-.23	-.38	-.59	-.81
222	-.11	-.16	-.23	-.38	-.59	-.81
223	-.08	-.13	-.23	-.38	-.59	-.75
224	-.11	-.16	-.23	-.40	-.61	-.78
225	-.08	-.13	-.15	-.20	-.30	-.44
226	-.08	-.09	-.11	-.18	-.28	-.39
227	0	-.02	-.06	-.16	-.28	-.47
228	.02	.02	-.04	-.13	-.28	-.44
229	~~.13~~	~~.16~~	~~.17~~	~~.18~~	~~.13~~	~~.08~~
230	.04	.02	-.04	-.13	-.33	-.53
231	.06	.04	-.02	-.13	-.30	-.47
232	.06	.04	-.02	-.13	-.33	-.50
233	-.08	-.09	-.13	-.18	-.26	-.39
234	-.08	-.09	-.11	-.16	-.24	-.36
235	.02	-.02	-.04	-.11	-.22	-.36
236	-.08	-.11	-.15	-.18	-.30	-.42

Note: Lines have been drawn through the pressure coefficients for which the data are doubtful.

TABLE 13.- CONTINUED

(b) Vertical tail (Concluded)

Orifice No. \ α	12.09	16.22	20.48	24.66	28.78	32.86
237	0.08	0.06	0.02	-0.07	-0.24	-0.44
238	.08	.09	.02	-.07	-.24	-.42
239	.11	.09	.02	-.07	-.22	-.39
240	.08	.06	0	-.09	-.26	-.42
241	-.08	-.09	-.13	-.18	-.24	-.36
242	-.06	-.06	-.09	-.16	-.22	-.33
243	.04	.02	-.02	-.07	-.18	-.31
244	0	-.04	-.06	-.11	-.20	-.31
245	.08	.07	.02	-.07	-.22	-.42
246	.11	.09	.04	-.04	-.20	-.39
247	.13	.11	.06	-.02	-.18	-.33
248	.13	.11	.06	-.02	-.20	-.36
249	-.02	-.04	-.09	-.11	-.20	-.31
250	-.04	-.07	-.09	-.13	-.22	-.31
251	.13	.11	.06	.02	-.09	-.22
252	.13	.11	.06	.02	-.09	-.22
253	.13	.11	.06	0	-.16	-.31
254	.17	.13	.11	.04	-.09	-.25
255	.15	.13	.09	.02	-.11	-.28
256	.19	.17	.13	.04	-.09	-.25

TABLE 13.– CONTINUED

(c) Fuselage

Orifice No. \ α	12.09	16.22	20.48	24.66	28.78	32.86
301	-0.06	-0.18	-0.44	-0.76	-1.04	-1.11
302	-.02	-.16	-.35	-.59	-.89	-1.08
303	.13	0	-.13	-.28	-.48	-.64
304	.29	.44	.44	.39	.39	.36
305	.42	.63	.72	.76	.87	.89
306	~~.31~~	~~.30~~	~~.30~~	~~.26~~	~~.22~~	~~.14~~
307	.19	.09	-.04	-.20	-.39	-.56
308	-.02	-.16	-.37	-.63	-1.13	-1.19
309	-.04	-.11	-.16	-.20	-.24	-.33
310	-.08	-.16	-.28	-.37	-.52	-.64
311	-.06	-.18	-.33	-.48	-.74	-.94
312	.17	.16	.13	.09	.04	-.06
313	.33	.39	.48	.52	.61	.67
314	.19	.13	.07	0	-.11	-.19
315	.02	-.09	-.24	-.39	-.63	-.83
316	-.06	-.18	-.28	-.41	-.59	-.75
317	-.13	-.22	-.30	-.41	-.54	-.64
318	-.13	-.24	-.37	-.52	-.74	-.94
319	.04	-.20	0	-.04	-.09	-.17
320	.17	.24	.33	.39	.48	.56
321	.06	.07	.04	0	-.04	-.11
322	-.08	-.18	-.30	-.46	-.65	-.83
323	-.15	-.24	-.35	-.46	-.59	-.69
324	-.23	-.28	-.33	-.39	-.48	-.56
325	.04	.09	.18	.24	.33	.39
326	-.06	-.07	-.09	-.13	-.18	-.22
327	-.42	-.44	-.24	-.46	-.50	-.50
328	-.23	-.30	-.24	-.54	-.72	-.81
329	.08	.16	.24	.30	.41	.50
330	.02	0	-.02	-.07	-.09	-.11
331	.02	-.02	-.07	-.11	-.18	-.31
332	-.17	-.33	-.52	-.80	-.83	-1.08
333	-.13	-.04	.02	.11	.20	.25
334	-.06	.02	.11	.18	.26	.31
335	-.08	-.18	-.30	-.39	-.59	-.89

Note: A line has been drawn through the pressure coefficients for which the data are doubtful.

TABLE 13.– CONTINUED

(c) Fuselage (Concluded)

Orifice No. \ α	12.09	16.22	20.48	24.66	28.78	32.86
336	0.08	0.04	-0.02	-0.16	-0.41	-0.61
337	-.19	-.16	-.09	-.02	.04	.08
338	-.19	-.13	-.09	-.02	.04	.08
339	.11	.07	.02	-.09	-.26	-.47
340	~~2.63~~	~~2.70~~	~~2.70~~	~~2.67~~	~~2.70~~	~~3.28~~
341	-.15	-.13	-.09	-.04	-.04	-.03
342	-.25	-.24	-.20	-.16	-.13	-.14
343	.13	.11	.07	.04	-.13	-.39
344	.08	.07	.02	-.09	-.26	-.44
345	-.29	-.30	-.30	-.28	-.33	-.33
346	-.23	-.22	-.20	-.18	-.22	-.22
347	-.13	-.11	-.09	-.04	-.04	-.06
348	-.23	-.22	-.20	-.18	-.20	-.22
349	-.29	-.28	-.26	-.24	-.26	-.31
350	.08	.07	.04	.02	-.02	-.11
351	-.02	-.02	.02	.02	-.02	-.06
352	-.06	-.09	-.09	-.07	-.16	-.22
353	-.02	0	.02	.02	.02	-.03
354	-.08	-.09	-.07	-.07	-.13	-.22
355	-.02	-.02	.02	0	-.02	-.11
356	.08	.07	.04	.02	-.04	-.11
357	.13	.09	.07	.07	-.02	-.11
358	~~.33~~	~~.28~~	~~.26~~	~~.20~~	~~.13~~	~~.03~~
359	.02	0	0	-.02	-.07	-.11
360	-.11	-.13	-.13	-.16	-.26	-.31
361	-.23	-.26	-.26	-.24	-.28	-.31
362	-.15	-.18	-.16	-.20	-.30	-.36
363	-.02	-.02	-.02	-.02	-.07	-.11
364	.02	.02	.02	0	-.02	-.08
365	.08	.07	.07	.09	.04	-.03
366	-.17	-.26	-.41	-.63	-1.04	-1.19
367	.06	.16	.24	.30	.39	.44
368	.06	.13	.22	.30	.39	.44
369	.13	.16	.18	.20	.20	.17
370	.13	.16	.18	.20	.20	.17
371	.13	.13	.13	.13	.09	.03
372	.13	.13	.13	.13	.09	.03

Note: Lines have been drawn through the pressure coefficients for which the data are doubtful.

TABLE 13.- CONCLUDED

(d) Fuselage-duct rakes

Tube No. \ α	12.09	16.22	20.84	24.66	28.78	32.86
401 T.H.[a]	0.98	0.94	0.94	0.89	0.81	0.61
402 St.H.[b]	0	.02	.06	.07	.02	-.08
403 T.H.	.98	.94	.94	.89	.81	.42
404	- - -	- - -	- - -	- - -	- - -	- - -
405 St.H.	.06	.02	.25	.07	.02	-.14
406 T.H.	.98	.94	.92	.87	.77	.64
407 T.H.	.98	.94	.92	.87	.77	.61
408 St.H.	.11	.11	.15	.13	.02	-.08
409 T.H.	.98	.94	.94	.87	.79	.64
410 T.H.	.98	.96	.96	.93	.85	.75
411 St.H.	.11	.09	.08	.07	-.09	-.19
412 T.H.	.98	.94	.92	.87	.74	.58
413 T.H.	.98	.94	.92	.89	.87	.67
414 St.H.	-.04	-.09	-.15	-.29	-.51	-.78
415 T.H.	.96	.91	.81	.73	.55	.36
416 T.H.	.94	.91	.85	.80	.06	.06
417 St.H.	-.15	-.21	-.21	-.38	-.53	-.50
418 T.H.	.83	.68	.54	.49	.04	-.39
501 T.H.	.71	.66	.52	.47	.36	.22
502 St.H.	.65	.57	.50	.44	.34	.22
503 T.H.	.73	.62	.54	.47	.36	.22
504 T.H.	.73	.62	.54	.47	.36	.22
505 St.H.	.65	.60	.50	.44	.34	.22
506 T.H.	.71	.60	.54	.49	.36	.25
507 T.H.	.69	.60	.56	.49	.36	.25
508 St.H.	.65	.57	.50	.44	.34	.22
509 T.H.	.69	.62	.56	.49	.38	.25
510 T.H.	.73	.62	.54	.47	.36	.22
511 St.H.	.65	.57	.50	.44	.34	.25
512 T.H.	.75	.62	.56	.49	.36	.25
513	- - -	- - -	- - -	- - -	- - -	- - -
514 St.H.	.65	.60	.50	.44	.32	.22
515 T.H.	.77	.64	.56	.49	.38	.22
516 T.H.	.75	.64	.56	.49	.38	.25
517 St.H.	.65	.57	.50	.44	.34	.19
518	- - -	- - -	- - -	- - -	- - -	- - -
519 T.H.	.77	.64	.56	.49	.36	.22
520 St.H.	.65	.57	.50	.44	.32	.22
521 T.H.	.71	.60	.54	.44	.36	.22
522 St.H.	.65	.57	.50	.44	.32	.19
523 T.H.	.65	.57	.50	.42	.32	.17

[a]Total-head tube (coefficient given as P_t).

[b]Static-head tube (coefficient given as P_s).

TABLE 14.- PRESSURE COEFFICIENTS FOR THE FLYING MOCK-UP OF THE XP-92 AIRPLANE, $\beta = -10.06^{\circ}$, $\delta_e = -5^{\circ}$, $\delta_a = 0^{\circ}$, $\delta_r = 0^{\circ}$

(a) Wing

Orifice No. \ α	4.16	8.31	16.62	24.95	26.97	28.97	32.97
101	-0.02	0.16	0.38	0.62	0.62	0.67	0.70
102	-.08	-.24	-.53	-1.29	-1.22	-1.56	-1.08
103	-	-	-	-	-	-	-
104	-	-	-	-	-	-	-
105	.13	.27	.45	.60	.62	.62	.61
106	-.19	-.44	-1.19	-2.78	-2.47	-1.58	-1.11
107	.23	.40	.32	.18	.16	.22	.21
108	-.33	-.85	-2.02	-2.47	-2.22	-1.53	-1.08
109	-.02	.07	.26	.44	.49	.51	.53
110	-.04	-.16	-.34	-.78	-1.00	-1.24	-1.03
111	-.02	.09	.32	.51	.56	.58	.59
112	-.56	-.29	-.53	-1.67	-1.67	-1.47	-1.05
113	.06	.22	.45	.58	.60	.60	.59
114	-.23	-.51	-1.06	-1.53	-1.49	-1.33	-1.00
115	.21	.38	.36	.42	.38	.40	.35
116	-.33	-.87	-2.19	-1.38	-1.40	-1.29	-1.00
117	-.13	-.07	.11	.29	.33	.33	.38
118	-.02	-.11	-.23	-.67	-.78	-.73	-.95
119	-.11	-.04	.15	.31	.33	.38	.41
120	-.06	-.16	-.34	-.87	-1.00	-1.00	-.97
121	-.06	.04	.26	.42	.44	.49	.51
122	-.15	-.29	-.53	-1.31	-1.33	-1.22	-.97
123	.08	.22	.43	.51	.49	.56	.54
124	-.23	-.49	-1.23	-1.13	-1.16	-1.02	-.92
125	.13	.36	.47	.49	.44	.47	.65
126	-.31	-.80	-2.53	-1.04	-1.11	-.89	-.86
127	-.15	-.11	.02	.13	.16	.16	.16
128	-.02	-.09	-.19	-.62	-.62	-.67	-.86
129	-.13	-.07	.06	.16	.16	.20	.22
130	-.04	-.09	-.30	-.82	-.89	-.91	-.86
131	-.15	-.07	.11	.21	.27	.27	.30
132	-.13	-.24	.15	-1.00	-1.04	-.96	-.86
133	-.06	.07	.26	.36	.38	.40	.41
134	-.21	-.42	-1.17	-.87	-.89	-.82	-.78
135	.04	.24	.43	.44	.47	.47	.43
136	-.29	-.78	-1.02	-.82	-.85	-.78	-.68
137	-.11	-.11	-.04	0	0	-.04	-.08
138	.08	.04	0	-.33	-.38	-.51	-.76
139	-.08	-.07	0	0	0	0	-.02
140	.11	.07	-.11	-.67	-.71	-.80	-.81

TABLE 14.– CONTINUED

(a) Wing (Concluded)

Orifice No. \ α	4.16	8.31	16.62	24.95	26.97	28.97	32.97
141	-0.15	-0.11	-0.04	-0.02	0	0	-0.03
142	.04	0	-.32	-.85	-.87	-.85	-.81
143	-.11	-.02	.06	.13	.18	.18	.16
144	-.13	-.27	-.74	-.73	-.73	-.71	-.73
145	-.04	.11	.17	.22	.24	.27	.24
146	-.17	-.44	-.68	-.69	-.71	-.67	-.73
147	-.13	-.11	-.06	-.07	-.07	-.07	-.14
148	.17	.20	.17	-.16	-.20	-.44	-.78
149	~~-.02~~	~~-.02~~	~~-.09~~	~~-.18~~	~~-.18~~	~~-.20~~	~~-.30~~
150	.35	.29	-.06	.07	-.67	-.78	-.86
151	-.27	-.24	0	0	.02	0	0
152	.31	.22	-.49	-.80	-.85	-.82	-.81
153	-.33	-.27	.11	.33	.33	.33	.30
154	-.13	-.22	-.68	-.73	-.73	-.71	-.78
155	-.08	.07	.23	.27	.29	.29	.27
156	-.17	-.51	-.68	-.71	-.73	-.73	-.86
157	-.04	-.04	0	-.02	-.02	-.07	-.16
158	.08	.07	.04	-.24	-.29	-.44	-.73
159	-.04	-.07	0	-.07	-.07	-.11	-.14
160	.13	.09	-.04	-.62	-.69	-.78	-.78
161	-.08	-.07	-.06	-.11	-.09	-.11	-.14
162	.06	0	-.49	-.76	-.78	-.78	-.76
163	-.15	-.07	0	0	.02	0	0
164	-.04	-.18	-.60	-.62	-.67	-.62	-.73
165	-.15	0	.11	.16	.18	.18	.14
166	-.15	-.40	-.60	-.62	-.60	-.62	-.73
167	.13	.11	.15	.02	0	-.16	-.43
168	.15	.16	.17	-.02	-.07	-.29	-.68
169	.08	.11	.06	-.29	-.33	-.49	-.59
170	.15	.11	.06	-.44	-.53	-.71	-.78
171	.06	.07	-.17	-.38	-.38	-.42	-.49
172	.11	.07	-.36	-.62	-.64	-.69	-.76
173	.08	.07	-.11	-.22	-.22	-.24	-.35
174	.08	.04	-.38	-.49	-.51	-.56	-.70
175	-.02	-.07	-.23	-.27	-.24	-.29	-.41
176	.04	-.11	-.70	-.47	-.47	-.51	-.68

Note: A line has been drawn through the pressure coefficients for which the data are doubtful.

TABLE 14.– CONTINUED

(b) Vertical tail

Orifice No. \ α	4.16	8.31	16.62	24.95	26.97	28.97	32.97
201	-1.32	-1.15	-.98	-1.02	-1.04	-1.06	-.63
202	.09	.02	-.04	.04	0	-.11	-1.34
203	-.68	-.60	-.63	-.74	-.78	-.81	-.63
204	~~.15~~	~~.19~~	~~.19~~	~~.16~~	~~.13~~	~~.09~~	~~-.08~~
205	-.43	-.43	-.48	-.61	-.62	-.68	-.63
206	~~.11~~	~~.13~~	~~.17~~	~~.18~~	~~.16~~	~~.13~~	~~.08~~
207	-.38	-.40	-.48	-.59	-.62	-.66	-.63
208	.19	.09	-.21	-.76	-.82	-.62	-1.03
209	-1.21	-1.17	-1.67	-1.67	-1.53	-1.49	-.95
210	.11	.04	-.11	-.24	-.24	-.17	-.74
211	-.60	-.60	-.71	-.87	-.91	-1.00	-.87
212	.15	.11	-.04	-.11	-.13	-.19	-.84
213	-.43	-.43	-.61	-.76	-.82	-.85	-.87
214	.11	.06	.02	-.18	-.24	-.43	-.89
215	-.32	-.34	-.46	-.65	-.69	-.72	-.74
216	~~.06~~	~~.04~~	~~-.17~~	~~-.61~~	~~-.62~~	~~-.51~~	~~-.87~~
217	-1.74	-2.19	-1.71	-2.17	-2.43	-3.04	-1.61
218	.13	.11	0	-.13	-.16	-.17	-.47
219	-.43	-.45	-.52	-.72	-.80	-.85	-.95
220	.09	.06	0	-.16	-.18	-.28	-.74
221	-.32	-.36	-.52	-.70	-.78	-.83	-.92
222	.02	0	-.06	-.28	-.36	-.53	-.53
223	-.32	-.36	-.48	-.70	-.76	-.81	-.89
224	-.02	-.04	-.15	-.35	-.36	-.53	-.74
225	-1.06	-.94	-.75	-.91	-1.04	-1.13	-.95
226	.13	.11	.04	-.02	-.04	-.06	-.32
227	-.17	-.06	-.17	-.30	-.38	-.47	-.74
228	.06	.04	.02	-.09	-.11	-.23	-.63
229	~~.11~~	~~.13~~	~~.17~~	~~.18~~	~~.18~~	~~.15~~	~~.11~~
230	.04	.04	0	-.18	-.24	-.43	-.71
231	-.06	-.09	-.15	-.28	-.33	-.43	-.63
232	.04	.04	-.02	-.24	-.33	-.45	-.66
233	-.62	-.62	-.56	-.70	-.80	-.85	-.87
234	.11	.09	.02	-.04	-.04	-.09	-.34
235	-.13	-.23	-.38	-.48	-.58	-.57	-.84

Note: Lines have been drawn through the pressure coefficients for which the data are doubtful.

TABLE 14.- CONTINUED

(b) Vertical tail (Concluded)

Orifice No. \ α	4.16	8.31	16.62	24.95	26.97	28.97	32.97
236	0	-0.04	-0.17	-0.18	-0.18	-0.21	-0.47
237	-.06	-.06	-.11	-.22	-.29	-.36	-.63
238	.09	.09	.02	-.09	-.16	-.36	-.71
239	-.02	-.02	-.06	-.22	-.27	-.36	-.58
240	.04	.02	.06	-.22	-.29	-.43	-.63
241	-.49	-.51	-.48	-.65	-.71	-.74	-.82
242	.02	0	-.04	-.11	-.11	-.15	-.39
243	-.09	-.15	-.25	-.37	-.44	-.45	-.76
244	0	-.02	-.08	-.13	-.16	-.19	-.50
245	-.02	-.04	-.06	-.18	-.24	-.32	-.61
246	.09	.09	.04	-.09	-.16	-.32	-.68
247	.02	.02	0	-.16	-.22	-.32	-.55
248	.06	.06	.02	-.16	-.22	-.36	-.63
249	-.40	-.38	-.40	-.54	-.60	-.64	-.76
250	-.15	-.17	-.19	-.28	-.31	-.36	-.50
251	.04	.04	.02	-.07	-.11	-.17	-.58
252	.09	.09	.08	0	-.04	-.11	-.53
253	.04	.04	.02	-.09	-.16	-.24	-.61
254	.11	.11	.11	0	-.07	-.19	-.66
255	.06	.09	.06	-.09	-.16	-.26	-.61
256	.11	.13	.08	-.07	-.11	-.26	-.63

TABLE 14.– CONTINUED

(c) Fuselage

Orifice No. \ α	4.16	8.31	16.62	24.95	26.97	28.97	32.97
301	0.06	-0.04	-0.25	-1.04	-1.11	-1.13	-1.13
302	.31	.17	-.13	-.51	-.63	-.74	-.87
303	.48	.45	.27	-.04	-.13	-.26	-.39
304	.48	.57	.71	.74	.74	.74	.74
305	.27	.36	.52	.64	.67	.72	.76
306	~~.02~~	~~.04~~	~~.02~~	~~-.06~~	~~-.11~~	~~-.11~~	~~-.21~~
307	0	-.04	-.25	-.53	-.59	-.62	-.71
308	0	-.11	-.50	-1.00	-1.07	-.98	-1.00
309	-.06	-.09	-.15	-.19	-.20	-.21	-.26
310	.08	-.02	-.27	-.60	-.67	-.79	-.95
311	.25	.17	-.04	-.36	-.48	-.62	-.84
312	.29	.34	.44	.45	.44	.45	.42
313	.04	.11	.19	.28	.28	.34	.37
314	-.04	-.09	-.21	-.43	-.50	-.55	-.68
315	-.04	-.09	-.27	-.57	-.65	-.57	-.95
316	-.04	-.04	-.15	-.26	-.33	-.36	-.45
317	.06	-.04	-.29	-.60	-.70	-.79	-.95
318	.15	.13	-.04	-.34	-.44	-.55	-.68
319	.17	.21	.29	.32	.30	.32	.29
320	0	.09	.23	.43	.46	.53	.61
321	-.13	-.15	-.25	-.40	-.44	-.47	-.58
322	-.13	-.19	-.35	-.64	-.74	-.83	-.97
323	-.11	-.13	-.19	-.32	-.37	-.40	-.50
324	-.08	-.15	-.31	-.51	-.57	-.60	-.66
325	-.08	0	.15	.32	.35	.43	.53
326	-.19	-.23	-.35	-.51	-.57	-.60	-.71
327	-.44	-.49	-.58	-.62	-.61	-.60	-.61
328	-.17	-.28	-.54	-.85	-.96	-1.04	-.95
329	-.08	-.04	.08	.21	.24	.30	.34
330	-.08	-.13	-.25	-.45	-.50	-.55	-.63
331	-.11	-.15	-.19	-.21	-.24	-.23	-.37
332	.02	-.04	-.13	-.51	-.70	-1.09	-1.00
333	-.25	-.17	0	.15	.18	.21	.26
334	-.11	-.04	.11	.23	.26	.28	.32
335	0	-.02	-.11	-.60	-.80	-.91	-.82
336	.02	.02	-.04	-.49	-.57	-.77	-.76

Note: A line has been drawn through the pressure coefficients for which the data are doubtful.

TABLE 14.– CONTINUED

(c) Fuselage (Concluded)

Orifice No. \ α	4.16	8.31	16.62	24.95	26.97	28.97	32.97
337	-0.21	-0.17	-0.06	0.04	0.07	0.06	0.11
338	-.11	-.06	.04	.15	.16	.17	.21
339	.02	.02	-.02	-.32	-.44	-.62	-.76
340	~~0~~	~~0~~	~~-.02~~	~~-.04~~	~~-.04~~	~~-.04~~	~~-.18~~
341	-.11	-.06	-.02	.04	.04	.04	.03
342	-.04	0	.06	.11	.11	.11	.08
343	-.11	-.13	-.19	-.26	-.30	-.36	-.53
344	-.11	-.11	-.15	-.26	-.33	-.40	-.58
345	-.04	-.02	.02	.02	0	-.04	-.11
346	-.04	-.02	.02	.04	.04	.02	-.05
347	-.06	-.04	0	.02	.04	.02	0
348	0	0	.04	.09	.09	.06	.03
349	-.02	0	.04	.06	.09	.04	.03
350	.06	.09	.08	0	-.02	-.13	-.55
351	.04	.06	.06	.02	-.02	-.13	-.61
352	.08	.11	.13	.09	.07	0	-.32
353	-.06	-.06	-.04	-.04	-.07	-.11	-.13
354	.04	.04	.04	.02	0	-.04	-.18
355	.04	.04	.04	0	0	-.04	-.18
356	.04	.04	.04	-.04	-.07	-.15	-.37
357	.08	.09	.06	-.04	-.04	-.17	-.50
358	~~.31~~	~~.32~~	~~.27~~	~~.21~~	~~.18~~	~~.13~~	~~.03~~
359	.04	.04	.04	.02	0	-.04	-.08
360	-.02	-.02	-.02	-.04	-.07	-.13	-.39
361	-.23	-.26	-.27	-.26	-.26	-.28	-.34
362	-.11	-.13	-.15	-.15	-.16	-.21	-.37
363	-.04	-.04	-.04	-.06	-.09	-.13	-.26
364	.02	.02	.04	-.04	-.07	-.11	-.26
365	.13	.11	.11	.09	.07	.02	-.16
366	0	-.06	-.19	-.43	-.63	-1.28	-1.05
367	-.04	.04	.17	.30	.33	.34	.37
368	-.11	-.04	.13	.26	.28	.32	.37
369	.06	.09	.15	.17	.18	.15	.11
370	.06	.09	.15	.17	.18	.15	.11
371	.11	.13	.17	.17	.18	.15	.08
372	.11	.13	.17	.17	.18	.15	.08

Note: Lines have been drawn through the pressure coefficients for which the data are doubtful.

TABLE 14.– CONCLUDED

(d) Fuselage-duct rakes

Tube No. \ α	4.16	8.31	16.62	24.95	26.97	28.97	32.97
401 T.H.[a]	0.83	0.83	0.82	0.70	0.69	0.63	0.46
402 St.H.[b]	-.21	-.25	-.35	-.44	-.51	-.61	-.92
403 T.H.	.94	.89	.86	.83	.69	.63	.43
404	-	-	-	-	-	-	-
405 St.H.	.06	.02	-.02	-.08	-.11	-.22	-.41
406 T.H.	.96	.94	.88	.70	.71	.61	.43
407 T.H.	.96	.94	.92	.74	.73	.67	.49
408 St.H.	.15	.13	.14	.06	.07	0	-.14
409 T.H.	.96	.94	.92	.77	.73	.67	.51
410 T.H.	.96	.94	.92	.79	.78	.74	.57
411 St.H.	.13	.13	.06	-.04	-.07	-.16	-.35
412 T.H.	.96	.94	.88	.72	.71	.63	.41
413 T.H.	.96	.94	.92	.72	.60	.24	.41
414 St.H.	.06	.02	-.14	-.42	-.56	-.76	-1.08
415 T.H.	.96	.94	.86	.62	.53	.41	0
416 T.H.	.96	.92	.69	.26	.42	.13	-.41
417 St.H.	-.08	-.17	-.37	-.52	-.60	-.61	-.68
418 T.H.	.96	.92	.67	.40	.42	-.02	-.57
501 T.H.	.71	.69	.61	.43	.42	.35	.19
502 St.H.	.67	.61	.53	.38	.38	.30	.27
503 T.H.	.73	.71	.61	.43	.40	.35	.19
504 T.H.	.73	.71	.61	.43	.40	.35	.19
505 St.H.	.65	.63	.53	.38	.38	.30	.19
506 T.H.	.73	.69	.59	.43	.40	.33	.16
507 T.H.	.71	.67	.57	.43	.40	.33	.16
508 St.H.	.65	.63	.53	.38	.38	.30	.16
509 T.H.	.69	.65	.57	.43	.40	.33	.16
510 T.H.	.81	.77	.65	.47	.42	.35	.19
511 St.H.	.61	.63	.53	.38	.38	.30	.08
512 T.H.	.89	.83	.69	.47	.44	.37	.22
513	-	-	-	-	-	-	-
514 St.H.	.61	.63	.53	.38	.36	.30	.19
515 T.H.	.83	.83	.71	.49	.44	.37	.22
516 T.H.	.77	.77	.69	.49	.47	.37	.22
517 St.H.	.65	.63	.53	.38	.36	.30	.16
518	-	-	-	-	-	-	-
519 T.H.	.89	.83	.71	.49	.47	.37	.22
520 St.H.	.65	.63	.53	.38	.36	.30	.16
521 T.H.	.77	.69	.61	.45	.42	.33	.14
522 St.H.	.65	.63	.53	.38	.36	.30	.16
523 T.H.	.69	.62	.53	.36	.36	.30	.11

[a]Total-head tube (coefficient given as P_t).

[b]Total-head tube (coefficient given as P_s).

TABLE 15.– PRESSURE COEFFICIENTS FOR THE FLYING MOCK-UP OF THE XP-92 AIRPLANE, $\beta = 9.98^{\circ}$, $\delta_e = -5^{\circ}$, $\delta_a = 0^{\circ}$, $\delta_r = 0^{\circ}$

(a) Wing

Orifice No. \ α	4.16	8.31	16.62	24.95	26.97	28.97	32.97
101	0.06	0.15	0.35	0.54	0.60	0.61	0.66
102	-.15	-.23	-.48	-.83	-1.02	-1.26	-1.37
103	–	–	–	–	–	–	–
104	–	–	–	–	–	–	–
105	.08	.15	.21	.22	.22	.20	.21
106	-.19	-.40	-.65	-3.98	-3.80	-3.35	-2.58
107	.11	.08	-.17	-.52	-.58	-.63	-.61
108	-.31	-.73	-3.18	-3.24	-3.07	-2.89	-1.71
109	0	.06	.15	.33	.36	.30	.37
110	-.21	-.31	-.50	-.76	-.80	-.85	-.89
111	.02	.08	.23	.37	.42	.44	.45
112	-.23	-.33	-.54	-1.30	-1.62	-1.80	-1.61
113	.04	.08	.19	.22	.24	.22	.24
114	-.25	-.48	-2.88	-2.46	-2.25	-2.02	-1.68
115	.08	.04	-.06	-.22	-.24	-.26	-.29
116	-.38	-.85	-2.06	-1.91	-1.84	-1.72	-1.47
117	-.11	-.11	.02	.16	.18	.18	.24
118	-.25	-.31	-.48	-.67	-.69	-.78	-.74
119	-.06	0	.15	.35	.38	.37	.42
120	-.25	-.31	-.48	-.85	-.91	-1.04	-1.00
121	0	.04	.19	.33	.38	.37	.39
122	-.23	-.33	-.42	-1.85	-1.53	-1.52	-1.34
123	0	.04	.11	.16	.16	.13	.16
124	-.27	-.48	-2.46	-1.74	-1.67	-1.52	-1.26
125	.04	.04	.04	-.06	-.07	-.13	-.13
126	-.38	-1.00	-1.42	-1.43	-1.40	-1.35	-1.13
127	-.11	-.08	0	.11	.11	.13	.16
128	-.21	-.27	-.38	-.52	-.58	-.70	-.76
129	-.06	-.02	.08	.22	.22	.24	.26
130	-.17	-.23	-.38	-.63	-.73	-.46	-.87
131	-.06	-.02	.08	.20	.20	.20	.24
132	-.19	-.27	-.44	-1.20	-1.22	-1.24	-1.13
133	-.02	.04	.13	.18	.18	.18	.18
134	-.21	-.33	-1.25	-1.24	-1.22	-1.22	-1.05
135	.04	.11	.13	.09	.09	.02	.03
136	-.35	-1.77	-.96	-1.04	-1.02	-1.04	-.95
137	-.08	-.08	-.02	.04	.04	.02	.03

TABLE 15.- CONTINUED

(a) Wing (Concluded)

Orifice No. \ α	4.16	8.31	16.62	24.95	26.97	28.97	32.97
138	0	-0.04	-0.08	-0.18	-0.24	-0.37	-0.50
139	-.06	-.06	.02	.07	.09	.07	.05
140	.04	0	-.08	-.28	-.40	-.54	-.68
141	-.11	-.11	-.04	0	0	.02	0
142	0	-.02	-.13	-.57	-.71	-.85	-1.00
143	-.06	-.06	-.02	.04	.04	.02	.05
144	-.06	-.11	-.77	-.89	-.91	-.96	-.87
145	-.04	-.02	.02	.02	.02	.02	0
146	-.15	-.79	-.58	-.72	-.78	-.85	-.82
147	-.06	-.08	0	.04	.04	.04	.16
148	.08	.11	.08	.04	0	-.11	-.29
149	~~0~~	~~-.02~~	~~-.06~~	~~-.13~~	~~-.13~~	~~-.16~~	~~-.21~~
150	.31	.23	-.06	-.20	-.31	-.48	-.63
151	-.25	-.25	-.02	0	.02	.07	.05
152	.27	.19	-.17	-.87	-.93	-1.00	-.95
153	-.29	-.27	-.11	.07	.09	.09	.08
154	-.08	-.13	-.69	-.83	-.87	-.91	-.87
155	0	-.04	0	-.02	-.02	-.04	-.03
156	-.17	-.42	-.54	-.72	-.73	-.80	-.82
157	-.02	-.02	.02	.09	.09	.04	.05
158	.04	0	-.02	-.09	-.13	-.26	-.42
159	-.04	-.02	0	.04	.04	.02	-.03
160	.08	.02	-.04	-.18	-.29	-.48	-.63
161	-.08	-.08	-.06	.07	-.07	-.09	-.11
162	.06	0	-.27	-.83	-.89	-.93	-.89
163	-.08	-.08	-.06	-.07	-.07	-.09	-.08
164	-.04	-.13	-.65	-.74	-.71	-.85	-.82
165	-.08	-.02	-.02	-.02	-.04	-.04	-.05
166	-.15	-.33	-.48	-.61	-.67	-.74	-.76
167	.13	.11	.13	.16	.16	.09	0
168	.13	.13	.13	.13	.11	.07	-.11
169	.11	.11	.08	.04	-.02	-.09	-.26
170	.13	.13	.08	0	-.07	-.22	-.42
171	.11	.06	-.06	-.35	-.40	-.46	-.50
172	.11	.06	-.15	-.61	-.69	-.76	-.79
173	.13	.04	-.17	-.26	-.29	-.35	-.37
174	.08	-.13	-.38	-.54	-.62	-.70	-.74
175	0	-.06	-.19	-.30	-.36	-.41	-.42
176	.06	-.02	-.27	-.48	-.51	-.61	-.68

Note: A line has been drawn through the pressure coefficients for which the data are doubtful.

TABLE 15.- CONTINUED

(b) Vertical tail

Orifice No. \ α	4.16	8.31	16.62	24.95	26.97	28.97	32.97
201	0	-0.06	-0.11	0.02	-0.04	-0.13	-1.50
202	-1.23	-1.06	-.93	-.93	-.98	-1.02	-.61
203	.19	.13	.07	-.16	-.20	-.30	-1.28
204	~~.08~~	~~.09~~	~~.09~~	~~.07~~	~~.04~~	~~.02~~	~~-.06~~
205	.21	.13	-.18	-.80	-.80	-.65	-1.14
206	~~.11~~	~~.11~~	~~.16~~	~~.18~~	~~.16~~	~~.13~~	~~.04~~
207	.21	.09	-.22	-.76	-.78	-.65	-1.17
208	.40	-.45	-.51	-.64	-.69	-.74	-.69
209	.13	.04	-.11	-.24	-.24	-.24	-.81
210	-1.17	-1.17	-1.44	-1.47	-1.40	-1.43	-1.03
211	.15	.09	0	-.13	-.18	-.26	-.92
212	-.58	-.64	-.85	-.89	-.93	-1.00	-.94
213	.08	.04	0	-.22	-.31	-.50	-.94
214	-.40	-.45	-.60	-.76	-.80	-.89	-.94
215	.13	.06	-.13	-.53	-.53	-.48	-.89
216	~~-.38~~	~~-.47~~	~~-.58~~	~~-.78~~	~~-.82~~	~~-.91~~	~~-.94~~
217	.13	.04	-.02	-.16	-.16	-.22	-.39
218	-1.77	-2.13	-1.89	-2.49	-2.71	-3.13	-1.86
219	.06	.02	-.02	-.20	-.24	-.33	-.81
220	-.42	-.47	-.53	-.76	-.80	-.91	-1.03
221	0	-.04	-.09	-.38	-.47	-.63	-.89
222	-.35	-.38	-.51	-.71	-.80	-.89	-1.03
223	-.02	-.04	-.13	-.38	-.40	-.57	-.81
224	-.33	-.40	-.51	-.73	-.80	-.89	-1.03
225	.08	.06	0	-.09	-.09	-.16	-.33
226	-.90	-1.00	-.73	-.87	-1.09	-1.17	-1.22
227	.04	0	-.02	-.13	-.18	-.28	-.67
228	-.17	-.09	-.18	-.31	-.40	-.48	-.75
229	~~.11~~	~~.11~~	~~.16~~	~~.18~~	~~.16~~	~~.13~~	~~.06~~
230	-.11	-.13	-.18	-.33	-.40	-.48	-.75
231	.04	0	.02	-.27	-.36	-.48	-.72
232	-.06	-.11	-.16	-.31	-.38	-.48	-.72
233	.11	.09	.02	-.04	-.04	-.09	-.28
234	-.67	-.72	-.56	-.71	-.85	-.96	-1.03
235	.06	.04	.02	-.09	-.11	-.18	-.50

Note: Lines have been drawn through the pressure coefficients for which the data are doubtful.

TABLE 15.– CONTINUED

(b) Vertical tail (Concluded)

Orifice No. \ α	4.16	8.31	16.62	24.95	26.97	28.97	32.97
236	-0.29	-0.32	-0.78	-0.78	-0.60	-0.63	-1.00
237	.08	.06	.04	-.13	-.20	-.39	-.75
238	-.04	-.06	-.09	-.24	-.29	-.39	-.69
239	.06	.04	0	-.22	-.29	-.44	-.69
240	-.02	-.06	-.11	-.27	-.33	-.44	-.69
241	.02	-.02	-.07	-.16	-.16	-.20	-.39
242	-.48	-.53	-.44	-.62	-.71	-.80	-.94
243	.06	.02	0	-.09	-.11	-.18	-.47
244	-.13	-.13	-.07	-.20	-.38	-.39	-.75
245	.04	.04	.02	-.13	-.20	-.37	-.75
246	-.02	-.04	-.07	-.20	-.24	-.35	-.67
247	.06	.06	0	-.20	-.27	-.39	-.67
248	.02	0	-.02	-.20	-.24	-.35	-.64
249	-.13	-.15	-.18	-.29	-.31	-.37	-.53
250	-.38	-.38	-.38	-.53	-.62	-.70	-.89
251	.08	.06	.04	-.04	-.09	-.16	-.53
252	.06	.04	.02	-.09	-.11	-.20	-.53
253	.06	.04	.02	-.09	-.16	-.28	-.67
254	.06	.06	.04	-.09	-.13	-.24	-.61
255	.08	.06	.04	-.11	-.18	-.33	-.67
256	.11	.11	.07	-.09	-.13	-.26	-.58

TABLE 15.- CONTINUED

(c) Fuselage

Orifice No. \ α	4.16	8.31	16.62	24.95	26.97	28.97	32.97
301	.06	-.04	-.33	-1.02	-1.13	-1.11	-1.21
302	-.02	-.13	-.39	-1.11	-1.18	-1.04	-1.05
303	-.04	-.11	-.28	-.60	-.71	-.69	-.79
304	.06	.08	-.07	-.02	-.07	-.08	-.16
305	.29	.38	.57	.72	.76	.79	.84
306	.38	.42	.50	.51	.49	.48	.45
307	.52	.48	.33	.06	-.04	-.11	-.26
308	.27	.13	-.20	-.60	-.76	-.81	-1.00
309	0	-.08	-.24	-.36	-.44	-.44	-.55
310	-.04	-.06	-.16	-.26	-.33	-.33	-.45
311	-.04	-.11	-.26	-.57	-.71	-.77	-.97
312	-.06	-.08	-.18	-.32	-.40	-.44	-.58
313	.17	.25	.41	.60	.62	.67	.74
314	.31	.35	.39	.36	.33	.33	.26
315	.31	.27	.11	-.19	-.29	-.35	-.58
316	.15	.04	-.24	-.57	-.73	-.79	-1.00
317	-.08	-.11	-.18	-.30	-.38	-.40	-.50
318	-.13	-.17	-.33	-.64	-.76	-.79	-1.00
319	-.13	-.15	-.26	-.43	-.51	-.52	-.66
320	-.08	-.02	.07	.19	.20	.25	.29
321	-.15	.21	.30	.34	.33	.35	.32
322	.17	.15	.04	-.21	-.31	-.35	-.55
323	-.04	-.06	-.30	-.62	-.76	-.79	-1.00
324	-.23	-.23	-.28	-.53	-.62	-.63	-.71
325	-.17	-.13	-.09	0	.02	.06	.08
326	0	.06	.16	.19	.18	.19	.21
327	-.42	-.46	-.54	-.55	-.60	-.56	-.61
328	-.02	-.08	-.26	-.57	-.67	-.65	-.74
329	-.06	0	.11	.28	.29	.35	.39
330	.02	.11	.20	.26	.24	.29	.32
331	-.15	-.19	-.22	-.26	-.29	-.27	-.42
332	-.27	-.31	-.46	-.66	-.78	-.83	-1.08
333	-.21	-.15	-.02	.15	.16	.21	.24
334	-.13	-.04	.13	.28	.31	.35	.37
335	-.23	-.27	-.37	-.57	-.69	-.73	-.92
336	-.11	-.13	-.20	-.34	-.42	-.50	-.74
337	-.21	-.17	-.07	.04	.04	.08	.08

Note: A line has been drawn through the pressure coefficients for which the data are doubtful.

TABLE 15.- CONTINUED

(c) Fuselage (Concluded)

Orifice No. \ α	4.16	8.31	16.62	24.95	26.97	28.97	32.97
338	-0.17	-0.11	0	0.11	0.13	0.15	0.16
339	-.08	-.08	-.13	-.23	-.33	-.40	-.63
340	~~1.69~~	~~1.69~~	~~1.76~~	~~1.72~~	~~1.78~~	~~1.71~~	~~2.03~~
341	-.11	-.08	-.02	.02	.02	.04	0
342	-.08	-.04	.02	.06	.07	.06	0
343	-.04	-.04	-.07	-.36	-.49	-.56	-.74
344	.02	.02	-.02	-.32	-.47	-.63	-.82
345	-.04	-.02	0	.02	.02	.02	-.05
346	0	0	.04	.06	.07	.06	0
347	-.04	-.04	0	.04	.02	.06	0
348	-.02	0	.07	.06	.04	.04	-.05
349	-.04	-.02	.04	.04	.02	.02	-.08
350	.04	.06	.07	-.02	-.09	-.15	-.37
351	.04	.04	.02	0	-.02	-.04	-.21
352	.04	.04	.04	.02	0	-.02	-.21
353	.19	.23	.02	.19	.18	.17	0
354	.08	.11	.11	.09	.04	-.02	-.32
355	.06	.06	.07	.02	-.07	-.15	-.61
356	.08	.08	.07	0	-.07	-.15	-.55
357	.08	.08	.07	-.04	-.09	-.15	-.50
358	~~.35~~	~~.33~~	~~.30~~	~~.21~~	~~.18~~	~~.15~~	~~0~~
359	.02	.02	0	-.04	-.09	-.11	-.29
360	-.04	-.06	-.07	-.09	-.13	-.17	-.37
361	-.19	-.23	-.24	-.26	-.31	-.31	-.37
362	-.04	-.02	-.02	-.09	-.13	-.21	-.58
363	.02	.02	.02	0	-.04	-.04	-.26
364	.08	.11	.11	.06	.02	0	-.16
365	.13	.13	.13	.09	.07	.02	-.18
366	-.23	-.27	-.39	-.79	-1.02	-1.11	-1.32
367	-.02	.06	.26	.40	.44	.48	.50
368	-.11	-.04	.13	.28	.31	.35	.39
369	.06	.11	.18	.19	.18	.17	.11
370	.06	.11	.18	.19	.18	.17	.11
371	.11	.15	.18	.17	.16	.15	.05
372	.11	.15	.18	.17	.16	.15	.05

Note: Lines have been drawn through the pressure coefficients for which the data are doubtful.

TABLE 15.– CONCLUDED

(d) Fuselage-duct rakes

Tube No. \ α	4.16	8.31	16.62	24.95	26.97	28.97	32.97
401 T.H.[a]	1.00	0.98	0.89	0.45	0.56	0.50	0.39
402 St.H.[b]	.49	.47	.39	.30	.28	.23	.13
403 T.H.	1.00	1.00	.93	.83	.80	.75	.68
404	- - -	- - -	- - -	- - -	- - -	- - -	- - -
405 St.H.	.30	.28	.20	.15	.18	.08	-.08
406 T.H.	1.00	1.00	.96	.83	.80	.75	.68
407 T.H.	.98	.98	.93	.81	.78	.73	.66
408 St.H.	.17	.06	.13	.11	.09	.04	-.08
409 T.H.	.98	.98	.96	.85	.80	.75	.68
410 T.H.	.98	.98	.93	.87	.82	.79	.71
411 St.H.	.09	.06	.02	-.13	-.16	-.21	-.34
412 T.H.	.98	.98	.91	.77	.72	.62	.47
413 T.H.	.98	.98	.91	.68	.59	.46	.26
414 St.H.	0	-.04	-.16	-.32	-.37	-.48	-.82
415 T.H.	.98	.94	.22	.60	.54	.42	.16
416 T.H.	.96	.91	.68	.15	.20	.15	-.29
417 St.H.	-.13	-.19	-.41	.55	-.59	-.56	-.39
418 T.H.	.94	.83	.56	.43	.30	-.13	-.53
501 T.H.	.66	.64	.56	.40	.37	.31	.16
502 St.H.	.64	.62	.52	.38	.35	.29	.13
503 T.H.	.68	.66	.59	.40	.37	.31	.16
504 T.H.	.68	.66	.56	.40	.37	.31	.16
505 St.H.	.64	.62	.52	.38	.35	.27	.13
506 T.H.	.66	.64	.56	.40	.37	.31	.16
507 T.H.	.66	.64	.56	.40	.37	.31	.18
508 St.H.	.64	.60	.52	.38	.35	.27	.13
509 T.H.	.72	.68	.56	.43	.39	.33	.18
510 T.H.	.66	.64	.53	.38	.35	.27	.13
511 St.H.	.64	.62	.52	.38	.35	.27	.13
512 T.H.	.68	.64	.55	.38	.35	.27	.13
513	- - -	- - -	- - -	- - -	- - -	- - -	- - -
514 St.H.	.64	.60	.52	.38	.35	.27	.13
515 T.H.	.70	.64	.55	.38	.35	.27	.13
516 T.H.	.70	.64	.55	.38	.35	.27	.13
517 St.H.	.64	.60	.52	.38	.41	.27	.13
518							
519 T.H.	.70	.64	.55	.38	.35	.27	.13
520 St.H.	.64	.60	.52	.38	.35	.27	.13
521 T.H.	.66	.64	.55	.36	.35	.27	.13
522 St.H.	.64	.60	.52	.38	.35	.27	.13
523 T.H.	.66	.64	.52	.36	.33	.25	.13

[a]Total-head tube (coefficient given as P_t).

[b]Static-head tube (coefficient given as P_s).

TABLE 16. PRESSURE COEFFICIENTS FOR THE FLYING MOCK-UP OF THE XP-92 AIRPLANE, $\beta = -10.06^{\circ}$, $\delta_e = -10^{\circ}$, $\delta_a = 0^{\circ}$, $\delta_r = 0^{\circ}$

(a) Wing

Orifice No. \ α	4.08	8.23	16.52	24.84	26.89	28.89	32.90
101	0	0.15	0.38	0.60	0.62	0.60	0.55
102	-.11	-.21	-.48	-1.04	-1.23	-1.38	-.85
103	—	—	—	—	—	—	—
104	—	—	—	—	—	—	—
105	.09	.25	.44	.57	.60	.62	.51
106	-.19	-.42	-.90	-2.47	-2.15	-1.38	-.35
107	.19	.35	.31	.21	.19	.26	.19
108	-.30	-.73	-1.88	-2.21	-2.15	-1.36	-.85
109	-.06	.04	.25	.43	.47	.49	.43
110	-.04	-.13	-.31	-.72	-.96	-1.13	-.79
111	-.06	.08	.31	.49	.51	.55	.49
112	-.15	-.25	-.48	-1.49	-1.53	-1.09	-.81
113	.02	.19	.42	.55	.57	.58	.49
114	-.21	-.44	-.94	-1.34	-1.34	-1.17	-.77
115	.15	.31	.35	.43	.38	.40	.30
116	-.09	-.75	-1.98	-1.23	-1.26	-1.11	-.77
117	-.19	-.11	.08	.23	.28	.29	.28
118	-.02	-.06	-.17	-.60	-.72	-.88	-.72
119	-.17	-.06	.11	.28	.32	.33	.32
120	-.04	-.11	-.29	-.79	-.94	-.88	-.74
121	-.13	0	.25	.38	.47	.44	.38
122	-.13	-.23	-.46	-1.15	-1.21	-1.04	-.74
123	.04	.17	.40	.47	.49	.50	.43
124	-.21	-.40	-.98	-1.00	-1.02	-.90	-.68
125	.06	.27	.44	.47	.47	.44	.36
126	-.28	-.67	-2.27	-.91	-.96	-.79	-.68
127	-.21	-.15	-.02	.06	.11	.11	.11
128	0	-.04	-.13	-.53	-.57	-.63	-.60
129	-.21	-.13	0	.11	.15	.15	.15
130	0	-.02	-.21	-.74	-.81	-.79	-.64
131	-.23	-.13	.06	.17	.21	.21	.21
132	-.11	-.15	-.42	-.87	-.94	-.81	-.66
133	-.15	0	.21	.32	.36	.35	.32
134	-.17	-.31	-1.06	-.74	-.81	-.71	-.60
135	-.04	.17	.38	.43	.43	.44	.36
136	-.23	-.58	-.92	-.70	-.74	-.69	-.57
137	-.26	-.21	-.15	-.15	-.11	-.17	-.15
138	.17	.17	.13	-.21	-.28	-.48	-.55

TABLE 16.– CONTINUED

(a) Wing (Concluded)

Orifice No. \ α	4.08	8.23	16.52	24.84	26.89	28.89	32.90
139	-0.26	-0.21	-0.13	-0.13	-0.11	-0.13	-0.13
140	.19	.19	.02	-.57	-.64	-.71	-.62
141	-.30	-.25	-.15	-.17	-.13	-.17	-.13
142	.17	.13	-.17	-.70	-.79	-.73	-.60
143	-.23	-.15	-.04	0	.04	.04	.04
144	.02	-.11	-.65	-.62	-.64	-.63	-.55
145	-.17	-.04	.06	.11	.15	.15	.13
146	-.02	-.25	-.56	-.57	-.62	-.63	-.53
147	-.43	-.40	-.35	-.40	-.38	-.46	-.40
148	.21	.15	.11	0	-.11	-.35	-.53
149	~~-.17~~	~~-.15~~	~~-.19~~	~~-.34~~	~~-.34~~	~~-.40~~	~~-.36~~
150	0	0	-.17	-.49	-.55	-.67	-.62
151	-.77	-.69	-.58	-.60	-.51	-.52	-.43
152	.40	.33	-.29	-.68	-.72	-.71	-.62
153	-.79	-.63	-.48	-.47	-.36	-.38	-.26
154	.15	-.02	-.54	-.60	-.64	-.63	-.55
155	-.32	-.08	.06	.15	.19	.21	.04
156	.02	-.23	-.56	-.55	-.57	-.58	-.62
157	-.17	-.15	-.11	-.15	-.15	-.21	-.23
158	.17	.15	.15	-.13	-.21	-.40	-.55
159	-.19	-.17	-.13	-.19	-.19	-.23	-.23
160	.19	.17	.08	-.53	-.62	-.69	-.60
161	-.23	-.19	-.17	-.23	-.21	-.25	-.21
162	.15	.11	-.31	-.66	-.70	-.67	-.57
163	-.32	-.21	-.13	-.15	-.11	-.13	-.11
164	.06	0	-.44	-.55	-.57	-.58	-.53
165	-.38	-.19	-.02	0	.04	.04	.02
166	0	-.19	-.42	-.57	-.57	-.61	-.53
167	.09	.29	.11	0	-.04	-.19	-.36
168	.15	.17	.19	0	-.06	-.29	-.49
169	.06	.08	.11	-.28	-.36	-.48	-.47
170	.13	.15	.11	-.38	-.51	-.65	-.60
171	.02	.04	-.15	-.36	-.40	-.44	-.40
172	.09	.08	-.25	-.55	-.57	-.63	-.55
173	.04	.06	-.11	-.21	-.21	-.27	-.32
174	.11	.06	-.27	-.47	-.47	-.52	-.53
175	-.11	-.04	-.13	-.26	-.28	-.31	-.34
176	.06	.02	-.31	-.62	-.49	-.52	-.53

Note: A line has been drawn through the pressure coefficients for which the data are doubtful.

TABLE 16.- CONTINUED

(b) Vertical tail

Orifice No. \ α	4.08	8.23	16.52	24.84	26.89	28.89	32.90
201	-1.28	-1.11	-0.94	-0.96	-0.94	-0.91	-1.00
202	.09	.04	0	.06	.04	-.13	-1.17
203	-.66	-.57	-.60	-.68	-.70	-.74	-.45
204	~~.17~~	~~.19~~	~~.17~~	~~.13~~	~~.11~~	~~.06~~	~~-.09~~
205	-.38	-.40	-.45	-.55	-.60	-.60	-.47
206	~~-.09~~	~~.11~~	~~.13~~	~~-.15~~	~~.15~~	~~.11~~	~~.02~~
207	-.36	-.38	-.43	-.55	-.57	-.62	-.49
208	.21	.11	-.19	-.70	-.77	-.55	-.83
209	-1.17	-1.11	-1.64	-1.66	-1.45	-1.36	-.70
210	.13	.06	-.09	-.21	-.23	-.17	-.64
211	-.55	-.57	-.66	-.47	-.83	-.87	-.66
212	.17	.15	.04	-.09	-.11	-.21	-.68
213	-.38	-.43	-.55	-.72	-.74	-.79	-.66
214	.13	.11	.04	-.15	-.21	-.43	-.72
215	-.28	-.32	-.40	-.60	-.64	-.68	-.60
216	~~-.09~~	~~.06~~	~~.13~~	~~-.55~~	~~-.53~~	~~-.53~~	~~-.72~~
217	-1.79	-2.09	-1.62	-2.04	-2.34	-2.87	-1.17
218	.15	.11	0	-.11	.13	-.17	-.38
219	-.38	-.40	-.47	-.66	-.72	-.81	-.72
220	.11	.09	.04	-.11	-.17	-.28	-.60
221	-.28	-.32	-.47	-.64	-.70	-.79	-.72
222	.04	.02	-.02	-.26	-.34	-.55	-.66
223	-.28	-.34	-.43	-.64	-.68	-.77	-.68
224	.02	0	-.11	-.32	-.34	-.53	-.57
225	-1.04	-.89	-.70	-.85	-.96	-1.13	-.77
226	.15	.11	.04	0	-.02	-.06	-.23
227	-.15	-.13	-.15	-.28	-.32	-.45	-.55
228	.09	.06	.04	-.06	-.11	-.26	-.49
229	~~-.09~~	~~.11~~	~~.15~~	~~.15~~	~~.15~~	~~.11~~	~~.02~~
230	.06	.06	.02	-.15	-.23	-.45	-.57
231	-.02	-.04	-.09	-.21	-.28	-.38	-.49
232	.06	.06	.02	-.21	-.30	-.45	-.51
233	-.60	-.62	-.53	-.66	-.74	-.85	-.66
234	.11	.11	.04	-.02	-.02	-.06	-.23
235	-.09	-.19	-.30	-.43	-.47	-.51	-.62

Note: Lines have been drawn through the pressure coefficients for which the data are doubtful.

TABLE 16.– CONTINUED

(b) Vertical tail (Concluded)

Orifice No. \ α	4.08	8.23	16.52	24.84	26.89	28.89	32.90
236	0	-0.04	-0.17	-0.17	-0.17	-0.34	-0.34
237	-.02	-.04	-.06	-.17	-.25	-.34	-.49
238	.13	.11	.09	-.06	-.15	-.36	-.55
239	.04	.02	-.02	-.15	-.21	-.32	-.45
240	.06	.06	.02	-.19	-.28	-.38	-.51
241	-.47	-.49	-.45	-.81	-.66	-.74	-.62
242	.04	.02	-.02	-.09	-.11	-.15	-.28
243	-.04	-.11	-.19	-.34	-.36	-.38	-.55
244	.02	0	-.06	-.13	-.13	-.17	-.38
245	0	0	-.04	-.15	-.21	-.32	-.49
246	.11	.11	.06	-.06	-.13	-.34	-.55
247	.06	.06	.02	-.11	-.17	-.28	-.43
248	.11	.11	.17	-.13	-.19	-.34	-.51
249	-.38	-.36	-.36	-.51	-.57	-.64	-.60
250	-.13	-.15	-.17	-.26	-.28	-.34	-.38
251	.06	.04	.04	-.06	-.11	-.15	-.43
252	.11	.11	.09	0	-.02	-.11	-.40
253	.06	.06	.04	-.06	-.11	-.26	-.49
254	.13	.17	.11	0	-.04	-.21	-.51
255	.11	.11	.09	-.06	-.11	-.26	-.47
256	.17	.17	.11	-.02	-.09	-.26	-.49

TABLE 16.- CONTINUED

(c) Fuselage

Orifice No. \ α	4.08	8.23	16.52	24.84	26.89	28.89	32.90
301	0.06	-0.04	-0.25	-1.04	-1.11	-1.17	-1.19
302	.33	.19	-.11	-.54	-.62	-.76	-.92
303	.50	.44	.06	-.09	-.11	-.24	-.43
304	.48	.58	.69	.74	.74	.76	.73
305	.27	.35	.50	.65	.68	.72	.76
306	~~.04~~	~~-.04~~	~~.02~~	~~-.09~~	~~-.11~~	~~-.16~~	~~-.24~~
307	0	-.04	-.23	-.54	-.57	-.67	-.76
308	0	-.11	-.44	-1.11	-1.02	-1.04	-1.03
309	-.06	-.08	-.15	-.24	-.21	-.24	-.30
310	.08	-.02	-.25	-.63	-.68	-.83	-1.00
311	.25	.19	.02	-.44	-.47	-.65	-.89
312	.27	.35	.42	.44	.45	.46	.41
313	.04	.11	.19	.28	.30	.30	.35
314	-.04	-.08	-.21	-.46	-.49	-.59	-.73
315	-.04	-.08	-.25	-.61	-.68	-.80	-1.00
316	-.02	-.06	-.15	-.30	-.30	-.39	-.49
317	.06	-.08	-.27	-.65	-.68	-.83	-1.00
318	.15	.11	-.06	-.41	-.43	-.57	-.78
319	.15	.21	.29	.28	.32	.30	.27
320	0	.08	.23	.41	.45	.50	.59
321	-.13	-.15	-.23	-.44	-.45	-.52	-.62
322	-.13	-.19	-.33	-.67	-.72	-.87	-1.05
323	-.13	-.13	-.19	-.35	-.36	-.44	-.54
324	-.08	-.15	-.29	-.54	-.55	-.63	-.68
325	-.08	0	.13	.33	.36	.41	.49
326	-.21	-.23	-.33	-.54	-.55	-.65	-.76
327	-.44	-.48	-.56	-.63	-.62	-.65	-.65
328	-.17	-.27	-.52	-.89	-.94	-1.07	-.97
329	-.08	-.04	.08	.22	.26	.28	.32
330	-.08	-.13	-.25	-.48	-.51	-.59	-.68
331	-.11	-.13	-.17	-.24	-.23	-.26	-.43
332	.04	0	-.11	-.54	-.72	-1.11	-1.03
333	-.29	-.21	-.08	.11	.15	.16	.22
334	-.15	-.08	.06	.20	.23	.24	.27
335	.04	.02	-.06	-.61	-.77	-.91	-.84
336	.08	.06	.02	-.46	-.57	-.74	-.81
337	-.25	-.21	-.11	-.02	.02	.02	.02
338	-.17	-.11	0	.07	.11	.11	.14
339	.08	.08	.04	-.28	-.43	-.61	-.78
340	~~.13~~	~~.11~~	~~.06~~	~~0~~	~~0~~	~~-.02~~	~~-.19~~

Note; Lines have been drawn through the pressure coefficients for which the data are doubtful.

TABLE 16.– CONTINUED

(c) Fuselage (Concluded)

Orifice No. \ α	4.08	8.23	16.52	24.84	26.89	28.89	32.90
341	−0.17	−0.13	−0.06	0.02	0	−0.02	−0.02
342	−.11	−.08	−.02	0	0.04	0	0
343	−.02	−.04	−.08	−.18	−.17	−.26	−.41
344	−.06	−.06	−.08	−.22	−.26	−.35	−.54
345	−.13	−.11	−.06	−.11	−.11	−.16	−.24
346	−.11	−.08	−.02	−.04	−.02	−.09	−.11
347	−.13	−.11	−.06	−.04	−.02	−.04	−.08
348	−.11	−.08	−.04	−.04	0	−.04	−.08
349	−.13	−.11	−.06	−.07	−.02	−.07	−.11
350	−.11	.11	.11	0	0	−.09	−.57
351	.04	.04	.04	0	−.04	−.13	−.68
352	.06	.08	.08	.04	−.02	−.04	−.35
353	−.13	−.15	−.11	−.13	−.11	−.18	−.22
354	0	−.02	−.04	−.09	−.11	−.16	−.30
355	0	0	.02	−.02	−.02	−.09	−.22
356	.06	.06	.06	−.04	−.09	−.18	−.43
357	.11	.11	.08	−.02	−.04	−.16	−.51
358	~~.33~~	~~.31~~	~~.27~~	~~.18~~	~~.17~~	~~.11~~	~~−.02~~
359	.02	.02	.02	0	0	−.04	−.14
360	−.04	−.02	−.02	−.07	−.09	−.16	−.46
361	−.25	−.27	−.29	−.30	−.30	−.33	−.41
362	−.13	−.15	−.13	−.20	−.19	−.26	−.43
363	−.08	−.08	−.08	−.13	−.13	−.20	−.30
364	.02	.02	.02	−.07	−.06	−.13	−.27
365	.13	.11	.11	.07	.09	0	−.14
366	.02	−.04	−.17	−.48	−.68	−1.28	−1.11
367	−.06	.02	.15	.28	.32	.33	.35
368	−.13	−.08	.11	.24	.28	.28	.32
369	.04	.08	.13	.13	.15	.11	.08
370	.04	.08	.13	.13	.15	.11	.08
371	.08	.11	.15	.13	.09	.09	.02
372	.08	.11	.15	.13	.09	.09	.02

Note: A line has been drawn through the pressure coefficient for which the data are doubtful.

TABLE 18.- CONCLUDED

(d) Fuselage-duct rakes

Tube No. \ α	3.75	7.94	16.30	24.65	26.70	28.71	32.75
401 T.H.[a]	0.85	0.85	0.81	0.74	0.71	0.62	0.51
402 St.H.[b]	-.29	-.38	-.44	-.54	-.64	-.77	-1.00
403 T.H.	.94	.94	.83	.72	.67	.62	.46
404	- - -	- - -	- - -	- - -	- - -	- - -	- - -
405 St.H.	0	-.02	-.08	-.13	-.20	-.28	-.46
406 T.H.	.96	.98	.88	.74	.69	.62	.49
407 T.H.	.98	.98	.92	.76	.73	.66	.54
408 St.H.	.08	.08	.08	.02	0	-.04	-.19
409 T.H.	.98	.98	.94	.78	.76	.68	.54
410 T.H.	.98	.98	.94	.80	.80	.72	.65
411 St.H.	.06	.06	.02	-.09	-.13	-.21	-.41
412 T.H.	.98	.98	.89	.74	.69	.62	.46
413 T.H.	.98	.98	.92	.74	.62	.30	.32
414 St.H.	.02	-.04	-.21	-.50	-.64	-.85	-1.16
415 T.H.	.96	.96	.83	.63	.56	.40	.05
416 T.H.	.96	.94	.67	.41	.44	.15	-.41
417 St.H.	-.17	-.27	-.46	-.65	-.73	-.77	-.76
418 T.H.	.96	.89	.67	.41	.38	-.02	-.57
501 T.H.	.69	.69	.58	.41	.38	.30	.22
502 St.H.	.65	.63	.52	.39	.33	.28	.16
503 T.H.	.71	.73	.58	.41	.38	.30	.19
504 T.H.	.71	.73	.58	.41	.38	.30	.19
505 St.H.	.65	.65	.50	.37	.33	.26	.14
506 T.H.	.71	.69	.56	.41	.38	.30	.19
507 T.H.	.67	.67	.56	.41	.38	.30	.19
508 St.H.	.65	.65	.50	.37	.33	.26	.14
509 T.H.	.67	.65	.56	.41	.38	.30	.19
510 T.H.	.81	.79	.62	.43	.40	.32	.22
511 St.H.	.65	.63	.52	.39	.33	.26	.14
512 T.H.	.87	.83	.67	.46	.42	.34	.24
513	- - -	- - -	- - -	- - -	- - -	- - -	- - -
514 St.H.	.65	.63	.52	.37	.33	.26	.14
515 T.H.	.83	.85	.69	.50	.42	.36	.24
516 T.H.	.77	.79	.67	.50	.42	.36	.24
517 St.H.	.65	.63	.52	.37	.33	.26	.14
518	- - -	- - -	- - -	- - -	- - -	- - -	- - -
519 T.H.	.89	.83	.69	.48	.42	.36	.24
520 St.H.	.65	.63	.52	.35	.33	.26	.14
521 T.H.	.77	.71	.58	.41	.38	.32	.19
522 St.H.	.65	.61	.50	.37	.33	.28	.14
523 T.H.	.67	.62	.52	.41	.33	.26	.16

[a]Total-head tube (coefficient given as P_t).

[b]Static-head tube (coefficient given as P_s).

TABLE 17.- PRESSURE COEFFICIENTS FOR THE FLYING MOCK-UP OF THE XP-92 AIRPLANE, $\beta = 9.98^{\circ}$, $\delta_e = -10^{\circ}$, $\delta_a = 0^{\circ}$, $\delta_r = 0^{\circ}$

(a) Wing

Orifice No. \ α	4.08	8.23	16.52	24.84	26.89	28.89	32.90
101	0.04	0.15	0.37	0.51	0.57	0.62	0.65
102	-.12	-.23	-.46	-.79	-.96	-1.15	-1.38
103	-	-	-	-	-	-	-
104	-	-	-	-	-	-	-
105	.06	.13	.22	.21	.24	.23	.24
106	-.20	-.38	-.63	-3.75	-3.41	-3.25	-2.59
107	.14	.11	-.13	-.49	-.52	-.55	-.59
108	-.33	-.69	-2.96	-3.15	-2.85	-2.73	-2.27
109	-.02	.06	.16	.28	.30	.32	.38
110	-.20	-.27	-.48	-.74	-.76	-.77	-.89
111	-.02	.06	.24	.36	.40	.43	.46
112	-.22	-.31	-.52	-1.21	-1.54	-1.70	-1.62
113	0	.08	.20	.21	.24	.23	.24
114	-.24	-.44	-2.67	-2.36	-2.04	-1.96	-.70
115	.06	.08	-.04	-.19	-.20	-.21	-.27
116	-.35	-.75	-2.06	-1.83	-1.72	-1.62	-1.51
117	-.16	-.13	0	.11	.16	.19	.22
118	-.22	-.27	-.46	-.64	-.63	-.70	-.70
119	-.12	-.02	.16	.30	.35	.38	.41
120	-.22	-.27	-.46	-.81	-.83	-.96	-1.00
121	-.06	.04	.20	.30	.35	.38	.38
122	-.22	-.29	-.39	-1.32	-1.37	-1.43	-1.35
123	-.02	.02	.11	.13	.16	.36	.16
124	-.24	-.42	-2.52	-1.64	-1.48	-1.47	-1.32
125	0	.06	.07	-.04	-.04	-.09	-.11
126	-.33	-.73	-1.39	-1.36	-1.24	-1.28	-1.14
127	-.16	-.13	-.04	.04	.09	.09	.11
128	-.14	-.21	-.28	-.47	-.50	-.55	-.70
129	-.12	-.06	.06	.15	.20	.19	.22
130	-.12	-.17	-.33	-.57	-.65	-.74	-.84
131	-.12	-.06	.06	.13	.18	.19	.19
132	-.12	-.21	-.39	-1.09	-1.11	-1.13	-1.11
133	-.08	0	.09	.15	.18	.17	.16
134	-.16	-.29	-1.22	-1.15	-1.07	-1.09	-1.05
135	-.02	.08	.11	.06	.09	.06	.03
136	-.27	-1.21	-.85	-.96	-.89	-.94	-.92
137	-.20	-.19	-.13	-.09	-.07	-.06	-.08
138	.08	.06	.04	-.04	-.09	-.13	-.32
139	-.22	-.17	-.11	-.06	-.04	-.04	-.05
140	.14	.13	.04	-.15	-.24	-.34	-.57

TABLE 17.– CONTINUED

(a) Wing (Concluded)

Orifice No. \ α	4.08	8.23	16.52	24.84	26.89	28.89	32.90
141	-0.24	-0.21	-0.16	-0.13	-0.11	-0.11	-0.14
142	.14	.11	-.02	-.64	-.76	-.81	-.86
143	-.16	-.13	-.11	-.09	-.07	-.06	-.03
144	.04	0	-.67	-.79	-.78	-.83	-.84
145	-.14	-.11	-.02	-.02	-.02	-.02	-.03
146	-.02	-.63	-.46	-.62	-.67	-.72	-.76
147	-.43	-.40	-.35	-.32	-.33	-.32	-.32
148	.18	.21	.22	.09	.09	.04	-.11
149	~~-.14~~	~~-.15~~	~~-.13~~	~~-.23~~	~~-.24~~	~~-.28~~	~~-.38~~
150	-.02	-.04	-.07	-.32	-.37	-.38	-.49
151	-.65	-.65	-.57	-.49	-.50	-.28	-.49
152	.39	.31	.16	-.72	-.76	-.81	-.84
153	-.63	-.56	-.52	-.47	-.44	-.45	-.43
154	.22	.04	-.50	-.66	-.70	-.74	-.78
155	-.20	-.08	-.37	-.30	-.28	-.28	-.27
156	-.02	-.27	-.37	-.57	-.61	-.68	-.78
157	-.14	-.15	-.11	-.06	-.07	-.06	-.14
158	.12	.11	.09	.04	.02	-.02	-.22
159	-.16	-.15	-.11	-.09	-.09	-.11	-.16
160	.18	.15	.09	-.04	-.16	-.26	-.54
161	-.18	-.17	-.13	-.19	-.20	-.19	-.22
162	.14	.11	-.11	-.72	-.78	-.83	-.84
163	-.20	-.15	-.16	-.19	-.20	-.19	-.22
164	.06	.06	-.52	-.64	-.65	-.70	-.73
165	-.20	-.13	-.07	-.15	-.13	-.13	-.16
166	-.02	-.17	-.35	-.49	-.54	-.60	-.68
167	.08	.08	.11	.11	.11	.09	-.03
168	.14	.13	.16	.15	.13	.11	-.03
169	.08	.08	.09	.04	-.02	-.06	-.24
170	.12	.13	.11	.04	-.04	-.13	-.38
171	.06	.06	-.02	-.36	-.39	-.43	-.49
172	.10	.08	-.07	-.57	-.61	-.66	-.73
173	.10	.08	-.13	-.26	-.28	-.30	-.38
174	.08	-.02	-.28	-.45	-.50	-.55	-.68
175	-.02	-.02	-.16	-.28	-.30	-.34	-.43
176	.08	.08	-.16	-.36	-.41	-.47	-.59

Note: A line has been drawn through the pressure coefficients for which the data are doubtful.

TABLE 17.– CONTINUED

(b) Vertical tail

Orifice No. \ α	4.08	8.23	16.52	24.84	26.89	28.89	32.90
201	0.02	-0.04	-0.06	0.04	0	-0.06	-1.41
202	-1.16	-1.04	-.85	-.87	-.89	-.94	-.54
203	.22	.17	.11	.11	-.17	-.23	-1.16
204	~~.08~~	~~.11~~	~~.11~~	~~.06~~	~~.04~~	~~0~~	~~-.08~~
205	.24	.19	-.13	-.70	-.74	-.64	-1.05
206	~~.08~~	~~.13~~	~~.17~~	~~.15~~	~~.16~~	~~.13~~	~~.03~~
207	.22	.17	-.15	-.68	-.72	-.64	-1.00
208	-.34	-.40	-.45	-.57	-.61	-.66	-.59
209	.14	.06	-.06	-.21	-.22	-.21	-.70
210	-1.10	-1.08	-1.40	-1.36	-1.30	-1.36	-.95
211	.18	.15	.06	-.09	-.13	-.21	-.84
212	-.54	-.56	-.66	-.81	-.83	-.91	-.86
213	.12	.11	.04	-.17	-.13	-.38	-.89
214	-.34	-.38	-.51	-.70	-.72	-.81	-.84
215	.16	.15	-.06	-.49	-.48	-.36	-.84
216	~~-.34~~	~~-.40~~	~~-.49~~	~~-.70~~	~~-.74~~	~~-.83~~	~~-.89~~
217	.16	.13	.02	-.11	-.13	-.17	-.38
218	-1.88	-2.17	-.57	-2.28	-2.57	-2.83	-1.62
219	.08	.11	.04	-.15	-.20	-.28	-.76
220	-.36	-.40	-.45	-.66	-.72	-.81	-.89
221	.04	.02	-.02	-.32	-.41	-.57	-.81
222	-.30	-.31	-.43	-.64	-.72	-.79	-.89
223	.04	.04	-.06	-.32	-.35	-.51	-.76
224	-.26	-.31	-.40	-.64	-.72	-.79	-.89
225	.14	.11	.04	-.04	-.07	-.11	-.32
226	-.88	-.85	-.62	-.79	-.93	-1.17	-1.08
227	.08	.06	.04	-.09	-.16	-.21	-.62
228	-.14	-.13	-.11	-.26	-.33	-.43	-.65
229	~~.16~~	~~.13~~	~~-.17~~	~~.15~~	~~.16~~	~~.13~~	~~.03~~
230	-.06	-.06	-.09	-.26	-.33	-.40	-.62
231	.08	.08	.04	-.21	-.30	-.40	-.62
232	-.02	-.04	-.06	-.23	-.30	-.40	-.62
233	.14	.13	.06	-.02	-.02	-.06	-.27
234	-.64	-.61	-.47	-.66	-.76	-.87	-.92
235	.12	.11	.06	-.04	-.07	-.11	-.43

Note: Lines have been drawn through the pressure coefficients for which the data are doubtful.

TABLE 17.– CONTINUED

(b) Vertical tail (Concluded)

Orifice No. \ α	4.08	8.23	16.52	24.84	26.89	28.89	32.90
236	-0.28	-0.35	-0.70	-0.70	-0.59	-0.57	-0.81
237	.12	.13	.09	-.09	-.16	-.28	-.68
238	-.02	-.02	-.04	-.17	-.24	-.32	-.59
239	.10	.11	.06	-.15	-.26	-.32	-.62
240	.04	0	-.04	-.19	-.26	-.32	-.59
241	.04	.02	-.02	-.11	-.13	-.15	-.35
242	-.46	-.46	-.40	-.57	-.67	-.74	-.84
243	.10	.08	.04	-.04	-.07	-.13	-.43
244	-.06	-.13	-.02	-.13	-.30	-.34	-.68
245	.10	.11	.09	-.09	-.18	-.28	-.68
246	.02	.02	-.02	-.13	-.20	-.28	-.59
247	.12	.13	.06	-.13	-.22	-.30	-.62
248	.06	.06	.02	-.11	-.18	-.26	-.54
249	-.08	-.11	-.15	-.26	-.28	-.32	-.43
250	-.34	-.31	-.32	-.49	-.57	-.64	-.76
251	.12	.13	.06	-.02	-.04	-.11	-.46
252	.10	.08	.06	-.04	-.07	-.13	-.46
253	.10	.11	.06	-.06	-.11	-.21	-.59
254	.10	.13	.09	-.04	-.09	-.17	-.54
255	.12	.15	.11	-.06	-.11	-.21	-.59
256	.14	.17	.13	-.02	-.09	-.17	-.49

TABLE 17.- CONTINUED

(c) Fuselage

Orifice No. \ α	4.08	8.23	16.52	24.84	26.89	28.89	32.90
301	0.06	-0.04	-0.33	-1.02	-1.11	-1.13	-1.18
302	-.04	-.13	-.35	-1.15	-1.13	-1.11	-.89
303	-.04	-.13	-.30	-.62	-.67	-.71	-.76
304	.06	.06	.07	-.02	-.06	-.06	-.16
305	.29	.38	.54	.72	.76	.77	.82
306	~~.37~~	~~.42~~	~~.50~~	~~.51~~	~~.50~~	~~.46~~	~~.42~~
307	.51	.48	.30	.06	-.04	-.13	-.26
308	.27	.13	-.20	-.60	-.74	-.81	-.97
309	-.02	-.11	-.26	-.38	-.41	-.44	-.76
310	-.06	-.08	-.16	-.26	-.30	-.33	-.39
311	-.06	-.11	-.28	-.57	-.70	-.77	-.92
312	-.06	-.08	-.18	-.34	-.39	-.42	-.53
313	.14	.23	.39	.60	.63	.65	.71
314	.29	.35	.39	.36	.35	.29	.26
315	.29	.27	.09	-.19	-.30	-.38	-.55
316	.12	.02	-.26	-.60	-.72	-.77	-.95
317	-.10	-.11	-.18	-.32	-.37	-.40	-.47
318	-.12	-.17	-.35	-.64	-.74	-.79	-.95
319	-.14	-.17	-.26	-.45	-.48	-.52	-.63
320	-.10	-.04	.06	.17	.20	.23	.29
321	.14	.21	.30	.34	.33	.31	.32
322	.16	.15	.02	-.21	-.30	-.38	-.53
323	.02	-.06	-.33	-.64	-.74	-.79	-.97
324	-.24	-.25	-.30	-.53	-.59	-.61	-.68
325	-.18	-.15	-.09	0	.02	.04	.08
326	0	.06	.16	.21	.20	.19	.21
327	-.43	-.48	-.57	-.55	-.57	-.56	-.58
328	-.04	-.06	-.26	-.55	-.63	-.67	-.71
329	-.08	-.02	.09	.28	.30	.33	.39
330	0	.08	.20	.28	.24	.27	.34
331	-.16	-.19	-.22	-.26	-.26	-.27	-.37
332	-.27	-.31	-.41	-.64	-.72	-.79	-.97
333	-.27	-.21	-.04	.11	.13	.17	.21
334	-.18	-.08	.09	.26	.28	.29	.34
335	-.20	-.23	-.33	-.53	-.61	-.67	-.84
336	-.06	-.06	-.13	-.26	-.33	-.40	-.61
337	-.27	-.23	-.11	0	.02	.04	.05
338	-.24	-.17	-.04	.09	.09	.08	.11
339	-.04	-.06	-.09	-.19	-.26	-.29	-.53
340	~~2.20~~	~~2.23~~	~~2.31~~	~~2.26~~	~~2.31~~	~~2.21~~	~~2.66~~

Note: Lines have been drawn through the pressure coefficients for which the data are doubtful.

TABLE 17.- CONTINUED

(c) Fuselage (Concluded)

Orifice No. \ α	4.08	8.23	16.52	24.84	26.89	28.89	32.90
341	-0.18	-0.15	-0.09	-0.02	-0.02	0	-0.03
342	-.14	-.13	-.04	-.02	-.02	-.02	-.08
343	.02	.02	0	-.26	-.35	-.44	-.68
344	.06	.06	.02	-.28	-.41	-.52	-.74
345	-.14	-.13	-.11	-.09	-.09	-.11	-.16
346	-.10	-.08	-.04	-.02	-.02	-.04	-.11
347	-.14	-.11	-.06	-.02	0	0	-.05
348	-.10	-.06	-.02	0	-.02	-.04	-.13
349	-.12	-.11	-.04	-.04	-.07	-.08	-.18
350	.04	.04	.04	-.04	-.07	-.11	-.34
351	0	0	0	0	-.02	-.04	-.18
352	-.04	-.04	-.06	-.09	-.09	-.13	-.29
353	.10	.15	.20	.21	.20	.17	.05
354	.06	.08	.09	.09	.04	0	-.29
355	.02	.04	.02	.02	-.02	-.08	-.55
356	.08	.11	.09	.02	0	-.04	-.45
357	.10	.11	.06	-.02	-.04	-.08	-.39
358	~~.33~~	~~.31~~	~~.28~~	~~.17~~	~~.13~~	~~.11~~	~~-.05~~
359	-.04	-.02	-.04	-.09	-.11	-.13	-.29
360	-.04	-.06	-.11	-.19	-.22	-.25	-.39
361	-.18	-.27	-.35	-.34	-.33	-.33	-.45
362	-.04	-.06	-.09	-.11	-.18	-.25	-.58
363	-.02	-.02	.02	.02	-.02	-.04	-.24
364	.06	.08	.07	.04	.02	0	-.16
365	.10	.15	.11	.09	.07	.04	-.11
366	-.20	-.25	-.37	-.77	-.98	-1.11	-1.24
367	-.06	.02	.22	.38	.44	.44	.50
368	-.12	-.06	.09	.26	.30	.33	.37
369	.02	.06	.16	.17	.18	.17	.11
370	.02	.06	.16	.17	.18	.17	.11
371	.08	.11	.16	.15	.13	.11	.03
372	.08	.11	.16	.15	.13	.11	.03

Note: A line has been drawn through the pressure coefficients for which the data are doubtful.

TABLE 17.- CONCLUDED

(d) Fuselage-duct rakes

Tube No. \ α	4.08	8.23	16.52	24.84	26.89	28.89	32.90
401 T.H.[a]	0.98	0.98	0.91	0.67	0.57	0.52	0.39
402 St.H.[b]	.48	.46	.39	.29	.26	.23	.13
403 T.H.	.98	.98	.98	.83	.79	.75	.68
404	- - -	- - -	- - -	- - -	- - -	- - -	- - -
405 St.H.	.29	.27	.09	.13	.11	.06	-.08
406 T.H.	.98	.98	.96	.83	.79	.75	.66
407 T.H.	.98	.98	.96	.81	.77	.73	.63
408 St.H.	.15	.17	.11	.08	.06	.04	-.08
409 T.H.	.98	.98	.96	.83	.79	.75	.66
410 T.H.	.98	.96	.93	.85	.81	.79	.71
411 St.H.	.13	.08	0	-.15	-.17	-.19	-.37
412 T.H.	.98	.96	.91	.75	.68	.65	.47
413 T.H.	.98	.96	.91	.69	.55	.50	.29
414 St.H.	-.08	-.04	-.17	-.38	-.43	-.46	-.82
415 T.H.	.98	.94	.84	.58	.49	.44	.16
416 T.H.	.96	.89	.67	.12	.17	.12	-.29
417 St.H.	-.17	-.19	-.44	-.61	-.64	-.58	-.68
418 T.H.	.92	.81	.56	.39	.19	-.11	-.58
501 T.H.	.67	.60	.56	.37	.34	.29	.16
502 St.H.	.67	.61	.52	.35	.32	.27	.13
503 T.H.	.69	.62	.59	.39	.34	.29	.16
504 T.H.	.69	.62	.56	.39	.34	.29	.16
505 St.H.	.67	.58	.52	.35	.32	.29	.13
506 T.H.	.67	.60	.56	.39	.34	.31	.16
507 T.H.	.67	.60	.56	.39	.34	.31	.16
508 St.H.	.67	.58	.52	.35	.32	.27	.13
509 T.H.	.73	.65	.56	.42	.34	.33	.18
510 T.H.	.67	.58	.52	.35	.30	.27	.87
511 St.H.	.67	.61	.52	.35	.32	.27	.13
512 T.H.	.69	.58	.52	.35	.32	.27	.13
513	- - -	- - -	- - -	- - -	- - -	- - -	- - -
514 St.H.	.65	.61	.52	.38	.32	.27	.13
515 T.H.	.71	.60	.54	.35	.32	.27	.13
516 T.H.	.69	.60	.54	.35	.32	.27	.13
517 St.H.	.67	.58	.52	.35	.32	.27	.13
518	- - -	- - -	- - -	- - -	- - -	- - -	- - -
519 T.H.	.69	.60	.52	.35	.32	.27	.13
520 St.H.	.67	.58	.52	.35	.32	.27	.13
521 T.H.	.67	.58	.52	.35	.32	.27	.13
522 St.H.	.67	.58	.52	.35	.32	.27	.13
523 T.H.	.62	.56	.50	.33	.30	.23	.11

[a]Total-head tube (coefficient given as P_t).

[b]Static-head tube (coefficient given as P_s).

TABLE 18.– PRESSURE COEFFICIENTS FOR THE FLYING MOCK-UP OF THE XP-92 AIRPLANE, $\beta = -10.06^{\circ}$, $\delta_e = -20^{\circ}$, $\delta_a = 0^{\circ}$, $\delta_r = 0^{\circ}$

(a) Wing

Orifice No. \ α	3.75	7.94	16.30	24.65	26.70	28.71	32.75
101	0	0.11	0.34	0.54	0.60	0.62	0.68
102	-.04	-.17	-.43	-.96	-1.29	-1.17	-1.05
103	- - -	- - -	- - -	- - -	- - -	- - -	- - -
104	- - -	- - -	- - -	- - -	- - -	- - -	- - -
105	.06	.21	.43	.57	.58	.60	.65
106	-.11	-.34	-.85	-2.22	-1.67	-1.17	-1.03
107	.17	.34	.34	.26	.27	.32	.27
108	-.21	-.66	-1.77	-2.02	-1.56	-1.17	-1.00
109	-.08	0	.21	.39	.44	.45	.54
110	.02	-.09	-.26	-.67	-.96	-1.04	-.95
111	-.08	.02	.28	.46	.49	.53	.59
112	-.08	-.21	-.43	-1.35	-1.27	-1.13	-.97
113	0	.15	.40	.54	.56	.57	.59
114	-.11	-.36	-.85	-1.22	-1.16	-1.02	-.95
115	.13	.32	.38	.44	.42	.43	.41
116	-.19	-.62	-1.77	-1.11	-1.09	-.96	-.95
117	-.23	-.17	.02	.20	.22	.26	.32
118	.06	0	-.11	-.54	-.67	-.64	-.86
119	-.19	-.13	.06	.22	.27	.30	.35
120	.04	-.04	-.21	-.74	-.89	-.79	-.92
121	-.17	-.06	.19	.33	.38	.40	.46
122	-.02	-.15	-.34	-1.02	-1.02	-.94	-.89
123	.02	.11	.34	.46	.47	.28	.54
124	-.09	-.30	-.74	-.91	-.89	-.77	-.81
125	.02	.21	.43	.46	.44	.47	.43
126	-.11	-.53	-1.57	-.83	-.85	-.72	-.81
127	-.29	-.28	-.11	0	0	0	.05
128	.13	.09	0	-.46	-.51	-.60	-.68
129	-.27	-.23	-.11	.02	.04	.06	.11
130	.13	.11	-.11	-.65	-.76	-.74	-.76
131	-.29	-.23	-.02	.11	.11	.11	.16
132	.06	-.04	-.26	-.76	-.80	-.72	-.76
133	-.23	-.11	.15	.26	.29	.30	.35
134	0	-.15	-.85	-.65	-.71	-.64	-.68
135	-.17	.09	.32	.39	.40	.40	.41
136	-.02	-.34	-.85	-.63	-.67	-.64	-.68
137	-.46	-.49	-.40	-.37	-.38	-.43	-.46
138	.38	.31	.32	-.04	-.22	-.45	-.65
139	-.44	-.45	-.36	-.35	-.36	-.40	-.41
140	.42	.36	.23	-.41	-.56	-.64	-.70

TABLE 18.– CONTINUED

(a) Wing (Concluded)

Orifice No. \ α	3.75	7.94	16.30	24.65	26.70	28.71	32.75
141	-0.54	-0.53	-0.43	-0.44	-0.44	-0.47	-0.46
142	.40	.34	.11	-.61	-.44	-.66	-.68
143	-.38	-.32	-.21	-.22	-.22	-.21	-.19
144	.31	.21	-.47	-.52	-.56	-.55	-.65
145	-.50	-.32	-.11	-.02	0	0	.03
146	.31	.11	-.40	-.48	-.51	-.53	-.65
147	-1.00	-1.06	-1.04	-1.11	-1.20	-1.26	-1.46
148	.15	.11	.04	.04	0	-.11	-.27
149	~~-.35~~	~~-.38~~	~~-.43~~	~~-.61~~	~~-.69~~	~~-.74~~	~~-.89~~
150	-.27	-.28	-.43	-.61	-.64	-.66	-.73
151	-1.52	-1.57	-1.60	-1.78	-1.87	-1.89	-2.00
152	-.50	-.49	-.79	-.57	-.60	-.64	-.68
153	-1.59	-1.51	-1.32	-1.39	-1.42	-1.47	-1.49
154	-.54	-.51	-.43	-.52	-.53	-.55	-.65
155	-.81	-.55	-.32	-.22	-.22	-.21	-.16
156	.44	.21	-.30	-.48	-.51	-.53	-.65
157	-.33	-.36	-.34	-.37	-.42	-.51	-.65
158	.33	.32	.32	.06	-.13	-.34	-.65
159	-.44	-.43	-.36	-.44	-.47	-.53	-.65
160	.42	.36	.28	-.39	-.53	-.64	-.70
161	-.50	-.51	-.38	-.48	-.53	-.53	-.59
162	.35	.32	0	-.54	-.58	-.60	-.68
163	-.56	-.51	-.40	-.39	-.40	-.43	-.43
164	.31	.21	-.21	-.46	-.49	-.51	-.65
165	-.90	-.53	-.30	-.22	-.22	-.26	-.27
166	.29	.17	-.15	-.48	-.53	-.53	-.65
167	.04	.06	.09	0	-.07	-.21	-.54
168	.17	.19	.21	.07	-.04	-.26	-.59
169	.04	.06	.09	-.26	-.42	-.53	-.62
170	.15	.15	.15	-.33	-.51	-.60	-.70
171	-.17	-.09	-.04	-.33	-.40	-.47	-.59
172	.06	.09	-.04	-.44	-.47	-.53	-.68
173	-.27	.02	-.04	-.20	-.22	-.32	-.41
174	0	.11	-.11	-.33	-.38	-.47	-.65
175	-.83	-.47	-.09	-.16	-.18	-.23	-.38
176	-.15	-.04	.02	-.11	-.18	-.26	-.38

Note: A line has been drawn through the pressure coefficients for which the data are doubtful.

TABLE 16.– CONTINUED

(b) Vertical tail.

Orifice No. \ α	3.75	7.94	16.30	24.65	26.70	28.71	32.75
201	-1.28	-1.06	-0.85	-0.87	-0.91	-0.69	-0.53
202	.11	.06	.02	.07	.07	-.25	-1.32
203	-.62	-.52	-.53	-.63	-.65	-.63	-.53
204	.15	.15	.15	.11	.07	0	-.13
205	-.36	-.35	-.40	-.50	-.54	-.52	-.53
206	.04	.06	.11	.11	.11	.06	0
207	-.32	-.31	-.38	-.50	-.52	-.52	-.53
208	.23	.15	-.13	-.65	-.74	-.56	-.97
209	-1.11	-1.04	-1.60	-1.65	-1.35	-1.11	-.82
210	.17	.11	-.06	-.20	-.20	-.15	-.66
211	-.49	-.50	-.57	-.74	-.76	-.73	-.76
212	.21	.19	.11	-.04	-.11	-.27	-.74
213	-.32	-.35	-.49	-.65	-.65	-.69	-.76
214	.19	.15	.11	-.11	-.22	-.50	-.79
215	-.21	-.25	-.32	-.52	-.54	-.58	-.63
216	.15	.11	-.04	-.50	-.43	-.54	-.79
217	-1.98	-2.04	-1.45	-1.83	-2.11	-2.52	-1.29
218	.19	.15	.02	-.06	-.11	-.15	-.39
219	-.32	-.31	-.38	-.54	-.63	-.69	-.79
220	.17	.15	.11	-.04	-.16	-.31	-.66
221	-.21	-.23	-.36	-.52	-.59	-.67	-.76
222	.11	.11	.06	-.20	-.33	-.52	-.76
223	-.19	-.23	-.32	-.50	-.59	-.65	-.74
224	.11	.06	0	-.24	-.35	-.50	-.66
225	-.89	-.73	-.64	-.76	-.87	-1.13	-.76
226	.17	.13	.09	.02	0	-.02	-.26
227	-.09	-.06	-.09	-.20	-.26	-.19	-.58
228	.13	.11	.11	0	-.07	-.21	-.53
229	.04	.06	.11	.11	.09	.06	0
230	.11	.11	.11	-.09	-.20	-.42	-.66
231	.06	.06	.02	-.11	-.18	-.27	-.45
232	.15	.15	.11	-.11	-.24	-.38	-.58
233	-.53	-.52	-.49	-.61	-.67	-.81	-.66
234	.15	.13	.06	.02	0	-.02	-.26
235	-.11	-.17	-.23	-.28	-.30	-.38	-.66

Note: Lines have been drawn through the pressure coefficients for which the data are doubtful.

TABLE 18.– CONTINUED

(b) Vertical tail (Concluded)

Orifice No. \ α	3.75	7.94	16.30	24.65	26.70	28.71	32.75
236	0.04	0	-0.17	-0.11	-0.11	-0.19	-0.37
237	.02	.02	0	-.11	-.16	-.27	-.47
238	.17	.15	.13	0	-.11	-.31	-.61
239	.13	.13	.09	-.02	-.11	-.21	-.39
240	.15	.13	.11	-.09	-.20	-.31	-.55
241	-.43	-.44	-.38	-.52	-.59	-.69	-.66
242	.06	.06	0	-.04	-.07	-.11	-.26
243	-.02	-.11	-.13	-.22	-.22	-.29	-.32
244	.04	.02	0	-.07	-.09	-.11	-.39
245	.04	.04	.02	-.07	-.16	-.25	-.47
246	.13	.17	.13	0	-.11	-.29	-.58
247	.15	.17	.11	0	-.07	-.19	-.39
248	.19	.19	.15	-.02	-.13	-.27	-.55
249	-.32	-.31	-.28	-.44	-.50	-.58	-.58
250	-.09	-.11	-.13	-.22	-.22	-.27	-.39
251	.11	.11	.06	0	-.02	-.15	-.45
252	.15	.15	.11	.07	.02	-.09	-.42
253	.11	.11	.09	0	.04	-.21	-.50
254	.19	.17	.15	.07	0	-.19	-.53
255	.19	.19	.17	.07	-.02	-.21	-.47
256	.21	.21	.19	.07	-.02	-.21	-.53

TABLE 18.– CONTINUED

(c) Fuselage

Orifice No. \ α	3.75	7.94	16.30	24.65	26.70	28.71	32.75
301	0.06	-0.04	-0.25	-0.94	-1.04	-1.08	-1.16
302	.33	.19	-.11	-.49	-.59	-.67	-.84
303	.50	.44	.27	-.04	-.09	-.19	-.39
304	.48	.58	.69	.74	.76	.77	.74
305	.27	.38	.50	.64	.67	.71	.76
306	~~-.02~~	~~.06~~	~~.02~~	~~-.06~~	~~-.11~~	~~-.15~~	~~-.18~~
307	0	-.04	-.23	-.49	-.57	-.63	-.71
308	0	-.08	-.38	-1.00	-1.07	-1.06	-.97
309	-.04	-.08	-.15	-.19	-.20	-.19	-.26
310	.08	-.02	-.25	-.57	-.65	-.73	-.92
311	.25	.19	-.04	-.36	-.46	-.56	-.82
312	.27	.35	.42	.45	.46	.48	.45
313	.04	.11	.19	.28	.28	.33	.37
314	-.04	-.06	-.21	-.40	-.48	-.52	-.68
315	-.04	-.08	-.25	-.55	-.63	-.73	-.95
316	-.02	-.04	-.15	-.26	-.28	-.33	-.45
317	.06	-.04	-.25	-.57	-.67	-.75	-.95
318	.17	.11	-.04	-.34	-.41	-.48	-.71
319	.17	.21	.29	.30	.33	.33	.29
320	0	.06	.23	.40	.46	.50	.61
321	-.13	-.15	-.25	-.38	-.44	-.46	-.58
322	-.13	-.19	-.35	-.64	-.70	-.77	-.97
323	-.13	-.13	-.19	-.30	-.33	-.38	-.50
324	-.06	-.15	-.29	-.47	-.52	-.56	-.63
325	-.08	-.02	.15	.32	.37	.40	.50
326	-.19	-.25	-.33	-.49	-.54	-.58	-.71
327	-.44	-.46	-.54	-.57	-.59	-.56	-.61
328	-.15	-.25	-.48	-.79	-.89	-.92	-.89
329	-.11	-.04	.06	.21	.26	.27	.34
330	-.08	-.15	-.25	-.43	-.48	-.50	-.58
331	-.08	-.13	-.15	-.19	-.20	-.19	-.34
332	-.08	.06	-.04	-.40	-.85	-.88	-.95
333	-.33	-.25	-.11	.06	.11	.13	.21
334	-.21	-.15	.02	.17	.18	.21	.24
335	.13	.11	.04	-.47	-.70	-.75	-.76
336	.17	.17	.15	-.28	-.48	-.63	-.68
337	-.35	-.31	-.19	-.06	-.04	-.04	0
338	-.25	-.23	-.11	0	.02	.02	.08
339	.17	.17	.15	-.13	-.35	-.50	-.68
340	~~0~~	~~.02~~	~~0~~	~~-.02~~	~~-.02~~	~~-.02~~	~~-.13~~

Note: Lines have been drawn through the pressure coefficients for which the data are doubtful.

TABLE 19.– CONTINUED

(c) Fuselage (Concluded)

Orifice No. \ α	3.72	7.94	16.30	24.65	26.70	28.71	32.75
337	-0.34	-0.30	-0.20	-0.07	-0.04	-0.04	-0.03
338	.32	-.26	-.13	-.02	0	.02	.05
339	.04	.04	.02	-.04	-.11	-.17	-.34
340	---	---	---	---	---	---	---
341	-.28	-.28	-.22	-.13	-.11	-.11	-.11
342	-.28	-.26	-.20	-.13	-.11	-.15	-.18
343	.15	.15	.13	-.04	-.20	-.38	-.63
344	.15	.15	.11	-.16	-.31	-.47	-.68
345	-.36	-.36	-.35	-.33	-.31	-.34	-.39
346	-.30	-.28	-.26	-.24	-.24	-.26	-.29
347	-.23	-.23	-.18	-.11	-.11	-.11	-.13
348	-.19	-.17	-.13	-.09	-.11	-.15	-.21
349	-.26	-.23	-.20	-.18	-.18	-.19	-.32
350	.06	.06	.07	-.04	-.09	-.15	-.34
351	-.11	-.11	-.07	-.09	-.07	-.11	-.21
352	-.15	-.19	-.24	-.26	-.27	-.32	-.68
353	.19	.23	.20	.20	.20	.17	.08
354	.04	.06	.07	.07	.04	-.02	-.24
355	-.11	-.11	-.04	.04	0	-.04	-.34
356	.13	.11	.11	.07	.04	-.04	-.32
357	.15	.13	.11	.02	0	-.06	-.32
358	~~.30~~	~~.30~~	~~.26~~	~~.18~~	~~.13~~	~~.06~~	~~-.05~~
359	-.13	-.11	-.07	-.13	-.13	-.17	-.26
360	-.23	-.21	-.18	-.24	-.24	-.28	-.37
361	-.28	-.32	-.30	-.35	-.38	-.36	-.71
362	-.09	-.11	-.13	-.11	-.13	-.19	-.53
363	0	0	-.02	0	-.02	-.04	-.13
364	.02	0	0	.02	0	-.02	-.13
365	.11	.09	.07	.04	.04	-.02	-.13
366	-.17	-.21	-.30	-.63	-.82	-.96	-1.21
367	-.09	0	.18	.37	.40	.43	.47
368	-.17	-.11	.07	.22	.29	.30	.37
369	.02	.04	.11	.16	.16	.13	.08
370	.02	.04	.11	.16	.13	.13	.08
371	.02	.06	.13	.13	.09	.06	-.03
372	.02	.06	.11	.11	.07	.06	-.03

Note: A line has been drawn through the pressure coefficients for which the data are doubtful.

TABLE 18.- CONCLUDED

(d) Fuselage-duct rakes

Tube No. \ α	3.75	7.94	16.30	24.65	26.70	28.71	32.75
401 T.H.[a]	0.85	0.85	0.81	0.74	0.71	0.62	0.51
402 St.H.[b]	-.29	-.38	-.44	-.54	-.64	-.77	-1.00
403 T.H.	.94	.94	.83	.72	.67	.62	.46
404	- - -	- - -	- - -	- - -	- - -	- - -	- - -
405 St.H.	0	-.02	-.08	-.13	-.20	-.28	-.46
406 T.H.	.96	.98	.88	.74	.69	.62	.49
407 T.H.	.98	.98	.92	.76	.73	.66	.54
408 St.H.	.08	.08	.08	.02	0	-.04	-.19
409 T.H.	.98	.98	.94	.78	.76	.68	.54
410 T.H.	.98	.98	.94	.80	.80	.72	.65
411 St.H.	.06	.06	.02	-.09	-.13	-.21	-.41
412 T.H.	.98	.98	.89	.74	.69	.62	.46
413 T.H.	.98	.98	.92	.74	.62	.30	.32
414 St.H.	.02	-.04	-.21	-.50	-.64	-.85	-1.16
415 T.H.	.96	.96	.83	.63	.56	.40	.05
416 T.H.	.96	.94	.67	.41	.44	.15	-.41
417 St.H.	-.17	-.27	-.46	-.65	-.73	-.77	-.76
418 T.H.	.96	.89	.67	.41	.38	-.02	-.57
501 T.H.	.69	.69	.58	.41	.38	.30	.22
502 St.H.	.65	.63	.52	.39	.33	.28	.16
503 T.H.	.71	.73	.58	.41	.38	.30	.19
504 T.H.	.71	.73	.58	.41	.38	.30	.19
505 St.H.	.65	.65	.50	.37	.33	.26	.14
506 T.H.	.71	.69	.56	.41	.38	.30	.19
507 T.H.	.67	.67	.56	.41	.38	.30	.19
508 St.H.	.65	.65	.50	.37	.33	.26	.14
509 T.H.	.67	.65	.56	.41	.38	.30	.19
510 T.H.	.81	.79	.62	.43	.40	.32	.22
511 St.H.	.65	.63	.52	.39	.33	.26	.14
512 T.H.	.87	.83	.67	.46	.42	.34	.24
513	- - -	- - -	- - -	- - -	- - -	- - -	- - -
514 St.H.	.65	.63	.52	.37	.33	.26	.14
515 T.H.	.83	.85	.69	.50	.42	.36	.24
516 T.H.	.77	.79	.67	.50	.42	.36	.24
517 St.H.	.65	.63	.52	.37	.33	.26	.14
518	- - -	- - -	- - -	- - -	- - -	- - -	- - -
519 T.H.	.89	.83	.69	.48	.42	.36	.24
520 St.H.	.65	.63	.52	.35	.33	.26	.14
521 T.H.	.77	.71	.58	.41	.38	.32	.19
522 St.H.	.65	.61	.50	.37	.33	.28	.14
523 T.H.	.67	.62	.52	.41	.33	.26	.16

[a]Total-head tube (coefficient given as P_t).

[b]Static-head tube (coefficient given as P_s).

CONFIDENTIAL

TABLE 19.– PRESSURE COEFFICIENTS FOR THE FLYING MOCK-UP OF THE XP-92 AIRPLANE, $\beta = 9.98^{\circ}$, $\delta_e = -20^{\circ}$, $\delta_a = 0^{\circ}$, $\delta_r = 0^{\circ}$

(a) Wing

Orifice No. \ α	3.75	7.94	16.30	24.65	26.70	28.71	32.75
101	0	0.11	0.34	0.51	0.53	0.59	0.63
102	-.11	-.19	-.38	-.72	-.93	-1.11	-1.32
103	---	---	---	---	---	---	---
104	---	---	---	---	---	---	---
105	.06	.13	.21	.36	.24	.24	.21
106	-.13	-.33	-.55	-3.37	-3.07	-2.93	-2.53
107	.09	.11	-.11	-.38	-.44	-.50	-.58
108	-.23	-.60	-2.68	-2.77	-2.60	-2.52	-2.21
109	-.06	0	.13	.28	.29	.28	.34
110	-.15	-.23	-.40	-.66	-.69	-.74	-.84
111	-.06	.04	.21	.34	.36	.41	.42
112	-.15	-.25	-.45	-1.09	-1.42	-1.57	-1.55
113	-.02	.06	.19	.23	.22	.24	.21
114	-.17	-.35	-2.36	-1.98	-1.80	-1.76	-1.61
115	.04	.08	0	-.13	-.16	-.18	-.26
116	-.26	-.61	-1.81	-1.57	-1.42	-1.46	-1.39
117	-.23	-.17	-.04	.09	.07	.11	.16
118	-.13	-.19	-.28	-.53	-.58	-.63	-.68
119	-.15	-.08	.09	.28	.29	.33	.34
120	-.15	-.19	-.28	-.68	-.76	-.87	-.95
121	-.11	-.02	.15	.30	.29	.33	.34
122	-.13	-.21	-.32	-1.13	-1.24	-1.28	-1.26
123	-.04	0	.11	.15	.13	-.13	.11
124	-.15	-.31	-1.89	-1.33	-1.27	-1.28	-1.26
125	-.02	.04	.09	0	-.02	-.04	-.11
126	-.21	-.52	-1.09	-1.13	-1.07	-1.13	-.82
127	-.25	-.23	-.13	-.02	-.04	-.02	.03
128	-.04	-.06	-.15	-.32	-.42	-.48	-.63
129	-.23	-.17	-.04	.09	.07	.09	.13
130	-.02	-.04	-.17	-.43	-.58	-.65	-.79
131	-.21	-.15	-.02	.09	.07	.09	.11
132	-.02	-.06	-.28	-.89	-.96	-1.00	-1.03
133	-.17	-.06	.06	.11	.11	.11	.11
134	-.04	-.15	-.83	-.87	-.89	-.93	-.87
135	-.11	.02	.11	.09	.07	.07	.03
136	-.09	-.29	-.60	-.72	-.76	-.80	-.84
137	-.49	-.46	-.38	-.32	-.36	-.35	-.34
138	.30	.27	.26	.19	.13	.07	-.39

TABLE 19.– CONTINUED

(a) Wing (Concluded)

Orifice No. \ α	3.75	7.94	16.30	24.65	26.70	28.71	32.75
139	-0.45	-0.42	-0.34	-0.28	-0.31	-0.30	-0.32
140	-.36	.31	.21	.09	-.09	-.20	-.45
141	-.53	-.48	-.40	-.36	-.38	-.39	-.37
142	.36	.31	.19	-.45	-.62	-.67	-.76
143	-.32	-.27	-.26	-.23	-.27	-.26	-.24
144	.30	.25	-.36	-.55	-.62	-.70	-.63
145	-.38	-.23	-.13	-.09	-.09	-.09	-.05
146	.28	.11	-.23	-.45	-.56	-.61	-.71
147	-1.23	-1.21	-1.19	-1.15	-1.22	-1.24	-1.26
148	.15	.13	.09	0	-.04	-.11	-.18
149	~~-.40~~	~~-.40~~	~~-.38~~	~~-.47~~	~~-.58~~	~~-.59~~	~~-.68~~
150	-.34	-.33	-.26	-.55	-.60	-.65	-.68
151	-1.43	-1.46	-1.53	-1.51	-1.60	-1.65	-1.37
152	-.60	-.56	-.64	-.53	-.60	-.65	-.74
153	-1.19	-1.15	-1.23	-1.26	-1.29	-1.30	-1.29
154	-.45	-.42	-.40	-.49	-.58	-.59	-.68
155	-.66	-.56	-.60	-.83	-1.02	-1.07	-1.11
156	.40	.11	-.13	-.34	-.49	-.54	-.66
157	-.45	-.44	-.38	-.34	-.38	-.37	-.45
158	.30	.29	.30	.30	.24	.20	.05
159	-.43	-.40	-.34	-.30	-.36	-.37	-.42
160	.38	.35	.26	.19	-.02	-.13	-.39
161	-.43	-.38	-.28	-.38	-.44	-.48	-.50
162	.34	.31	.09	-.55	-.64	-.70	-.76
163	-.55	-.44	-.36	-.36	-.40	-.41	-.45
164	.28	.21	-.28	-.45	-.53	-.59	-.71
165	-.53	-.35	-.26	-.23	-.27	-.26	-.29
166	.23	.06	-.13	-.30	-.40	-.48	-.58
167	.04	.04	.06	.06	.04	0	-.08
168	.19	.17	.19	.19	.18	.16	.03
169	.02	.06	.09	.06	-.04	-.11	-.24
170	.13	.15	.15	.11	-.02	-.11	-.32
171	-.09	-.02	-.02	-.34	-.40	-.46	-.53
172	.09	.08	0	-.45	-.56	-.59	-.68
173	.04	.08	-.13	-.19	-.27	-.33	-.42
174	.11	.11	-.15	-.30	-.38	-.44	-.58
175	-.49	-.04	-.13	-.19	-.27	-.33	-.42
176	.06	.11	-.06	-.17	-.29	-.37	-.47

Note: A line has been drawn through the pressure coefficients for which the data are doubtful.

TABLE 19.- CONTINUED

(b) Vertical tail

Orifice No. \ α	3.75	7.94	16.30	24.65	26.70	28.71	32.75
201	0.06	0.02	-0.04	0.07	0.04	-0.15	-1.30
202	-1.08	-0.94	-0.79	-0.72	-0.80	-0.77	-0.54
203	.25	.19	.15	-.07	-.16	-.34	-1.08
204	~~.06~~	~~.06~~	~~.09~~	~~.07~~	~~0~~	~~-.02~~	~~-.08~~
205	.27	.20	-.06	-.64	-.73	-.60	-1.00
206	~~.06~~	~~.08~~	~~.13~~	~~.13~~	~~.11~~	~~.09~~	~~0~~
207	.25	.17	-.09	-.60	-.69	-.57	-.95
208	-.29	-.33	-.38	-.47	-.53	-.60	-.59
209	.17	.13	-.02	-.16	-.18	-.15	-.73
210	-.98	-.96	-1.40	-1.19	-1.18	-1.13	-.57
211	.21	.17	-.13	-.04	-.11	-.23	-.78
212	-.46	-.46	-.57	-.68	-.76	-.79	-.76
213	.17	.13	.11	-.13	-.20	-.49	-.84
214	-.27	-.29	-.45	-.57	-.64	-.70	-.76
215	.19	.17	0	-.40	-.38	-.47	-.78
216	~~-.25~~	~~-.31~~	~~-.43~~	~~-.60~~	~~-.67~~	~~-.72~~	~~-.81~~
217	.19	.17	.06	-.04	-.09	-.13	-.43
218	-1.79	-1.92	-1.47	-2.00	-2.33	-2.55	-1.27
219	.17	.15	.11	-.06	-.20	-.28	-.73
220	-.27	-.31	-.34	-.53	-.62	-.70	-.81
221	.11	.08	.06	-.26	-.40	-.57	-.76
222	-.21	-.21	-.32	-.50	-.62	-.68	-.81
223	.11	.08	.02	-.26	-.33	-.49	-.70
224	-.17	-.21	-.30	-.50	-.60	-.68	-.81
225	.15	.13	.06	0	-.04	-.06	-.30
226	-.77	-.77	-.53	-.70	-.89	-1.13	-.86
227	.11	.11	.09	-.04	-.11	-.21	-.59
228	-.04	-.04	-.04	-.16	-.27	-.36	-.59
229	~~.06~~	~~.08~~	~~.13~~	~~.16~~	~~.11~~	~~.09~~	~~0~~
230	0	0	-.02	-.16	-.27	-.34	-.57
231	.15	.17	.13	-.11	-.27	-.36	-.62
232	.08	.06	.06	-.11	-.20	-.28	-.49
233	.17	.15	.09	.04	0	-.04	-.24
234	-.56	-.56	-.43	-.59	-.71	-.85	-.76
235	.15	.13	.09	.02	-.04	-.09	-.43

Note: Lines have been drawn through the pressure coefficients for which the data are doubtful.

TABLE 19.- CONTINUED

(b) Vertical tail (Concluded)

Orifice No. \ α	3.75	7.94	16.30	24.65	26.70	28.71	32.75
236	-0.23	0.25	-0.66	-0.52	-0.47	-0.49	-0.73
237	.17	.17	.15	-.02	-.13	-.30	-.65
238	.06	.06	.02	-.09	-.18	-.26	-.51
239	.17	.17	.15	-.04	-.20	-.30	-.59
240	.13	.13	.09	-.04	-.16	-.85	-.46
241	.06	.06	.02	-.04	-.07	-.11	-.32
242	-.40	-.40	-.34	-.48	-.60	-.68	-.68
243	.13	.13	.09	.02	-.04	-.09	-.43
244	-.04	-.06	.02	-.04	-.22	-.30	-.62
245	.15	.15	.13	-.02	-.13	-.28	-.65
246	.06	.08	.06	-.04	-.16	-.23	-.51
247	.17	.17	.15	-.02	-.18	-.28	-.59
248	.17	.17	.13	0	-.29	-.17	-.41
249	-.04	-.06	.09	-.18	-.22	-.28	-.38
250	-.25	-.25	-.26	-.36	-.51	-.60	-.65
251	.15	.15	.13	.07	0	-.06	-.43
252	.13	.13	.11	.04	-.04	-.09	-.43
253	.13	.15	.11	.02	-.07	-.19	-.59
254	.15	.17	.13	.04	-.04	-.13	-.51
255	.17	.19	.17	.04	-.07	-.21	-.57
256	.21	.21	.19	.09	-.02	-.13	-.46

TABLE 19.— CONTINUED

(c) Fuselage

Orifice No. \ α	3.75	7.94	16.30	24.65	26.70	28.71	32.75
301	0.06	-0.04	-0.28	-0.96	-1.09	-0.89	-1.21
302	-.02	-.11	-.26	-1.09	-1.16	-.91	-1.00
303	-.04	-.11	-.26	-.59	-.67	-.68	-.76
304	.06	.09	.07	.02	-.04	-.02	-.13
305	.28	.38	.54	.72	.76	.79	.84
306	~~.34~~	~~.43~~	~~.50~~	~~.50~~	~~.49~~	~~.49~~	~~.42~~
307	.51	.49	.33	.09	-.02	-.06	-.26
308	.26	.15	-.18	-.52	-.69	-.79	.97
309	-.02	-.09	-.26	-.37	-.40	-.43	-.47
310	-.06	-.09	-.16	-.24	-.27	-.32	-.39
311	-.06	-.11	-.26	-.54	-.67	-.79	-.92
312	-.06	-.09	-.18	-.33	-.38	-.45	-.53
313	.15	.23	.39	.57	.62	.64	.74
314	.30	.34	.39	.37	.36	.32	.24
315	.30	.28	.11	-.16	-.27	-.34	-.58
316	.15	.04	-.24	-.54	-.69	-.74	-.95
317	-.09	-.11	-.16	-.30	-.36	-.36	-.45
318	-.13	-.17	-.35	-.61	-.71	-.74	-.95
319	-.15	-.17	-.26	-.44	-.49	-.53	-.61
320	-.09	-.04	.04	.18	.20	.21	.29
321	.15	.21	.30	.33	.33	.77	.34
322	.17	.15	.04	-.20	-.27	-.34	-.53
323	.04	-.04	-.30	-.61	-.71	-.77	-.97
324	-.23	-.23	-.28	-.48	-.60	-.64	-.68
325	-.19	-.17	-.09	.02	0	.06	.11
326	0	.06	.18	.20	.20	.21	.21
327	-.43	-.47	-.52	-.57	-.56	-.55	-.58
328	-.02	-.06	-.26	-.52	-.60	-.64	-.71
329	-.09	-.04	.09	.24	.29	.32	.39
330	0	.09	.18	.24	.29	.28	.34
331	-.13	-.17	-.22	-.24	-.24	-.26	-.34
332	-.19	-.21	-.35	-.57	-.64	-.72	-.87
333	-.32	-.26	-.11	.04	.09	.13	.18
334	-.21	-.13	.04	.20	.24	.28	.34
335	-.09	-.11	-.22	-.41	-.49	-.57	-.76
336	.06	.04	0	-.09	-.18	-.26	-.45

Note: A line has been drawn through the pressure coefficients for which the data are doubtful.

TABLE 19.– CONTINUED

(c) Fuselage (Concluded)

Orifice No. \ α	3.72	7.94	16.30	24.65	26.70	28.71	32.75
337	-0.34	-0.30	-0.20	-0.07	-0.04	-0.04	-0.03
338	.32	-.26	-.13	-.02	0	.02	.05
339	.04	.04	.02	-.04	-.11	-.17	-.34
340	---	---	---	---	---	---	---
341	-.28	-.28	-.22	-.13	-.11	-.11	-.11
342	-.28	-.26	-.20	-.13	-.11	-.15	-.18
343	.15	.15	.13	-.04	-.20	-.38	-.63
344	.15	.15	.11	-.16	-.31	-.47	-.68
345	-.36	-.36	-.35	-.33	-.31	-.34	-.39
346	-.30	-.28	-.26	-.24	-.24	-.26	-.29
347	-.23	-.23	-.18	-.11	-.11	-.11	-.13
348	-.19	-.17	-.13	-.09	-.11	-.15	-.21
349	-.26	-.23	-.20	-.18	-.18	-.19	-.32
350	.06	.06	.07	-.04	-.09	-.15	-.34
351	-.11	-.11	-.07	-.09	-.07	-.11	-.21
352	-.15	-.19	-.24	-.26	-.27	-.32	-.68
353	.19	.23	.20	.20	.20	.17	.08
354	.04	.06	.07	.07	.04	-.02	-.24
355	-.11	-.11	-.04	.04	0	-.04	-.34
356	.13	.11	.11	.07	.04	-.04	-.32
357	.15	.13	.11	.02	0	-.06	-.32
358	.30	.30	.26	.18	.13	.06	-.05
359	-.13	-.11	-.07	-.13	-.13	-.17	-.26
360	-.23	-.21	-.18	-.24	-.24	-.28	-.37
361	-.28	-.32	-.30	-.35	-.38	-.36	-.71
362	-.09	-.11	-.13	-.11	-.13	-.19	-.53
363	0	0	-.02	0	-.02	-.04	-.13
364	.02	0	0	.02	0	-.02	-.13
365	.11	.09	.07	.04	.04	-.02	-.13
366	-.17	-.21	-.30	-.63	-.82	-.96	-1.21
367	-.09	0	.18	.37	.40	.43	.47
368	-.17	-.11	.07	.22	.29	.30	.37
369	.02	.04	.11	.16	.16	.13	.08
370	.02	.04	.11	.16	.13	.13	.08
371	.02	.06	.13	.13	.09	.06	-.03
372	.02	.06	.11	.11	.07	.06	-.03

Note: A line has been drawn through the pressure coefficients for which the data are doubtful.

TABLE 19.- CONCLUDED

(d) Fuselage duct rakes

Tube No. \ α	3.75	7.94	16.30	24.65	26.70	28.71	32.75
401 T.H.[a]	0.98	1.00	0.91	0.70	0.61	0.57	0.42
402 St.H.[b]	.45	.43	.36	.28	.26	.21	.13
403 T.H.	.98	1.00	.98	.85	.80	.79	.71
404	—	—	—	—	—	—	—
405 St.H.	.26	.23	.15	.11	.07	.04	-.08
406 T.H.	.98	1.00	.98	.85	.80	.79	.68
407 T.H.	.98	1.00	.96	.81	.78	.77	.66
408 St.H.	.11	.13	.09	.07	.04	0	-.08
409 T.H.	.98	.98	.96	.85	.80	.81	.68
410 T.H.	.98	.98	.94	.87	.82	.83	.71
411 St.H.	.04	.04	-.02	-.17	-.22	-.36	-.34
412 T.H.	.96	.96	.91	.74	.70	.66	.50
413 T.H.	.96	.96	.91	.70	.61	.53	.32
414 St.H.	-.04	-.06	-.21	-.36	-.44	-.53	-1.39
415 T.H.	.96	.94	.83	.60	.50	.45	.16
416 T.H.	.94	.89	.66	.09	.15	.13	-.24
417 St.H.	-.19	-.26	-.51	-.64	-.67	-.68	-.68
418 T.H.	.91	.83	.55	.38	.24	-.13	-.58
501 T.H.	.62	.62	.53	.38	.33	.26	.13
502 St.H.	.60	.57	.49	.36	.30	.17	.13
503 T.H.	.64	.62	.55	.38	.33	.28	.13
504 T.H.	.64	.60	.55	.38	.33	.28	.13
505 St.H.	.60	.57	.49	.36	.28	.17	.13
506 T.H.	.62	.62	.53	.38	.33	.26	.16
507 T.H.	.62	.62	.53	.40	.33	.28	.16
508 St.H.	.60	.57	.49	.36	.28	.17	.13
509 T.H.	.70	.66	.53	.40	.33	.28	.16
510 T.H.	.62	.66	.49	.36	.28	.28	.11
511 St.H.	.60	.57	.49	.36	.30	.17	.16
512 T.H.	.64	.60	.49	.34	.28	.23	.13
513	—	—	—	—	—	—	—
514 St.H.	.62	.57	.51	.36	.30	.17	.16
515 T.H.	.66	.62	.49	.34	.28	.23	.13
516 T.H.	.66	.62	.51	.34	.28	.23	.13
517 St.H.	.60	.57	.49	.36	.30	.17	.16
518	—	—	—	—	—	—	—
519 T.H.	.66	.60	.51	.34	.28	.23	.13
520 St.H.	.60	.57	.49	.36	.30	.17	.16
521 T.H.	.62	.60	.51	.34	.28	.23	.13
522 St.H.	.60	.57	.49	.36	.30	.17	.16
523 T.H.	.60	.57	.47	.34	.28	.23	.13

[a]Total head tube (coefficient given as P_t).

[b]Static head tube (coefficient given as P_s).

TABLE 20.– PRESSURE COEFFICIENTS FOR THE FLYING MOCK-UP OF THE XP-92 AIRPLANE, $\beta = 0.13^{\circ}$, $\delta_e = 0^{\circ}$, $\delta_a = \pm 10^{\circ}$, $\delta_r = 0^{\circ}$

(a) Wing

Orifice No. \ α	4.21	8.39	16.70	25.02	27.07	29.08	33.06
101	0.02	0.13	0.38	0.57	0.61	0.65	0.69
102	–.16	–.25	–.52	–.93	–1.09	–1.39	–1.95
103	– –	– –	– –	– –	– –	– –	– –
104	– –	– –	– –	– –	– –	– –	– –
105	.11	.21	.33	.41	.41	.44	.41
106	–.24	–.42	–1.04	–3.04	–3.13	–2.76	–2.13
107	.18	.25	.04	–.41	–.22	–.22	–.28
108	–.37	–.75	–2.84	–2.50	–2.67	–2.36	–1.97
109	–.02	.06	.27	.41	.44	.48	.49
110	–.16	–.21	–.38	–.74	–.85	–.87	–.92
111	0	.11	.29	.44	.50	.52	.54
112	–.24	–.31	–.52	–1.70	–1.85	–1.80	–1.64
113	.07	.17	.31	.41	.44	.44	.41
114	–.28	–.46	–2.61	–1.96	–1.87	–1.74	–1.54
115	.16	.23	.17	.09	.07	.07	0
116	–.41	–.81	–2.34	–1.65	–1.63	–1.50	–1.31
117	–.13	–.06	.11	.22	.28	.33	.33
118	–.13	–.19	–.29	–.65	–.63	–.67	–.85
119	–.11	–.02	.15	.30	.35	.39	.41
120	–.16	–.21	–.40	–.78	–.87	–.98	–1.13
121	–.04	.06	.25	.39	.44	.46	.46
122	–.20	–.29	–.42	–1.48	–1.50	–1.43	–1.38
123	.07	.13	.27	.30	.35	.35	.33
124	–.26	–.44	–1.98	–1.41	–1.41	–1.30	–1.23
125	.11	.19	.27	.20	.20	.20	.10
126	–.39	–.73	–1.50	–1.22	–1.20	–1.13	–1.13
127	–.13	–.11	.04	.11	.18	.18	.18
128	–.11	–.13	–.25	–.57	–.52	–.59	–.82
129	–.11	–.08	.06	.16	.20	.22	.23
130	–.11	–.11	–.29	–.74	–.78	–.85	–1.05
131	–.11	–.04	.11	.20	.22	.24	.23
132	–.13	–.21	–.56	–1.15	–1.15	–1.09	–1.18
133	–.07	.04	.19	.26	.30	.30	.28
134	–.22	–.33	–1.00	–1.00	–.98	–.96	–1.03
135	.04	.17	.27	.26	.28	.28	.21
136	–.37	–.63	–.79	–.89	–.87	–.85	–.95
137	–.20	–.15	–.11	–.07	–.02	–.04	–.10
138	.11	.11	.02	–.13	–.16	–.30	–.56

TABLE 20.– CONTINUED

(a) Wing (Concluded)

Orifice No. \ α	4.21	8.39	16.70	25.02	27.07	29.08	33.06
139	−0.20	−0.15	−0.11	−0.06	−0.02	−0.04	−0.10
140	.26	.13	.02	−.46	−.54	−.65	−.90
141	−.26	−.21	−.13	−.13	−.11	−.11	−.13
142	.16	.11	−.25	−.85	−.85	−.87	−1.03
143	−.18	−.11	−.06	−.02	0	.02	0
144	.02	−.08	−.61	−.78	−.76	−.76	−.92
145	−.13	−.04	0	.07	.09	.11	.05
146	−.04	−.29	−.50	−.67	−.65	−.74	−.87
147	−.35	−.33	−.29	−.28	−.24	−.28	−.33
148	.24	.27	.21	.09	.11	0	−.31
149	−.13	−.11	−.15	−.28	−.26	−.30	−.41
150	0	0	−.08	−.37	−.46	−.54	−.79
151	−.72	−.63	−.50	−.46	−.44	−.44	−.49
152	.39	.31	−.31	−.78	−.80	−.83	−.97
153	−.70	−.61	−.50	−.39	−.32	−.30	−.23
154	.18	−.02	−.48	−.67	−.76	−.74	−.90
155	−.22	−.04	.06	−.22	−.16	−.13	−.15
156	0	−.29	−.42	−.63	−.63	−.74	−.92
157	−.13	−.11	−.08	−.09	−.07	−.09	−.18
158	.13	.13	.08	−.02	−.04	−.18	−.44
159	−.16	−.13	−.11	−.13	−.11	−.13	−.21
160	.18	.17	.08	−.41	−.50	−.63	−.85
161	−.20	−.15	−.15	−.22	−.20	−.22	−.28
162	.13	−.11	−.44	−.78	−.80	−.83	−.95
163	−.24	−.17	−.15	−.16	−.13	−.13	−.18
164	.09	−.02	−.42	−.63	−.63	−.67	−.79
165	−.26	−.11	−.06	−.02	0	−.04	−.08
166	−.02	−.19	−.38	−.57	−.57	−.65	−.79
167	.11	.11	.11	.09	.11	.04	−.15
168	.13	.15	.17	.13	.11	.04	−.26
169	.11	.11	.08	−.18	−.22	−.30	−.54
170	.13	.13	.11	−.28	−.33	−.48	−.74
171	.07	.08	−.15	−.39	−.41	−.46	−.33
172	.11	.11	−.29	−.61	−.65	.72	−.64
173	.11	.11	−.13	−.26	−.26	−.32	−.41
174	.11	.08	−.06	−.50	−.52	−.59	−.72
175	−.04	0	−.15	−.30	−.30	−.35	−.44
176	.11	.04	−.25	−.22	−.44	−.54	−.67

Note: A line has been drawn through the pressure coefficients for which the data are doubtful.

TABLE 20.– CONTINUED

(b) Vertical Tail

Orifice No. \ α	4.21	8.39	16.70	25.02	27.07	29.08	33.06
201	-0.09	-0.15	-0.23	-0.35	-0.37	-0.41	-0.74
202	-.09	-.08	-.19	-.33	-.37	-.31	-.44
203	-.16	-.19	-.28	-.41	-.44	-.48	-.79
204	~~.20~~	~~.19~~	~~.19~~	~~.16~~	~~.13~~	~~.13~~	~~.03~~
205	-.13	-.17	-.26	-.39	-.41	-.48	-.79
206	~~.16~~	~~.17~~	~~.23~~	~~.24~~	~~.20~~	~~.18~~	~~.13~~
207	-.13	-.17	-.28	-.39	-.41	-.46	-.74
208	-.11	-.15	-.26	-.41	-.46	-.46	-.62
209	-.22	-.27	-.34	-.46	-.48	-.52	-.69
210	-.09	-.08	-.19	-.37	-.39	-.44	-.62
211	-.22	-.25	-.32	-.46	-.50	-.52	-.72
212	-.13	-.19	-.26	-.44	-.46	-.52	-.72
213	-.24	-.27	-.34	-.52	-.54	-.61	-.85
214	-.13	-.17	-.28	-.46	-.50	-.54	-.79
215	-.18	-.21	-.30	-.44	-.48	-.52	-.74
216	~~-.18~~	~~-.19~~	~~-.30~~	~~-.50~~	~~-.52~~	~~-.59~~	~~-.87~~
217	-.26	-.29	-.34	-.41	-.41	-.46	-.59
218	-.07	-.06	-.15	-.30	-.32	-.39	-.59
219	-.28	-.29	-.34	-.50	-.52	-.59	-.77
220	-.13	-.15	-.23	-.41	-.46	-.52	-.77
221	-.30	-.33	-.40	-.61	-.65	-.74	-.92
222	-.18	-.19	-.28	-.50	-.54	-.65	-.90
223	-.30	-.31	-.40	-.61	-.63	-.72	-.87
224	-.18	-.19	-.28	-.52	-.59	-.70	-.87
225	-.26	-.29	-.30	-.35	-.37	-.41	-.54
226	-.09	-.08	-.13	-.24	-.26	-.32	-.49
227	-.13	-.13	-.17	-.30	-.33	-.41	-.59
228	-.04	-.04	-.09	-.24	-.26	-.35	-.56

Note: Lines have been drawn through the pressure coefficients for which the data are doubtful.

TABLE 20.– CONTINUED

(b) Vertical tail (Concluded)

Orifice No. \ α	4.21	8.39	16.70	25.02	27.07	24.08	33.06
229	~~0.16~~	~~0.17~~	~~0.21~~	~~0.24~~	~~0.20~~	~~0.18~~	~~0.13~~
230	–.02	–.02	–.09	–.26	–.30	–.41	–.64
231	–.13	–.15	–.21	–.41	–.46	–.54	–.69
232	–.02	–.02	–.09	–.30	–.35	–.46	–.67
233	–.26	–.27	–.30	–.30	–.33	–.37	–.49
234	–.09	–.09	–.13	–.22	–.24	–.30	–.49
235	–.11	–.13	–.15	–.24	–.26	–.33	–.49
236	–.11	–.11	–.17	–.26	–.30	–.37	–.54
237	–.07	–.08	–.11	–.26	–.30	–.41	–.59
238	.02	.02	–.02	–.18	–.24	–.33	–.56
239	–.09	–.13	–.17	–.35	–.39	–.48	–.62
240	–.02	–.02	–.09	–.26	–.30	–.41	–.59
241	–.24	–.23	–.23	–.30	–.30	–.35	–.49
242	–.09	–.08	–.13	–.22	–.24	–.28	–.46
243	–.07	–.06	–.09	–.20	–.20	–.28	–.44
244	–.02	–.02	–.09	–.18	–.20	–.26	–.44
245	–.04	–.04	–.09	–.24	–.26	–.37	–.59
246	.02	.02	–.02	–.16	–.20	–.30	–.51
247	–.07	–.06	–.09	–.28	–.30	–.41	–.59
248	.02	.02	–.02	–.20	–.24	–.35	–.51
249	–.13	–.13	–.17	–.22	–.24	–.28	–.41
250	–.09	–.11	–.15	–.22	–.24	–.28	–.41
251	.07	.06	.02	–.09	–.09	–.18	–.33
252	.09	.06	.04	–.07	–.09	–.16	–.33
253	.04	.04	0	–.11	–.18	–.24	–.51
254	.09	.11	.04	–.09	–.11	–.20	–.38
255	.02	.02	–.02	–.20	–.22	–.30	–.49
256	.09	.06	.02	–.13	–.18	–.26	–.44

Note: A line has been drawn through the pressure coefficients for which the data are doubtful.

TABLE 20.– CONTINUED

(c) Fuselage

Orifice No. \ α	4.21	8.39	16.70	25.02	27.07	29.08	33.06
301	0.15	0.06	-0.19	-0.83	-0.96	-1.07	-1.13
302	.19	.11	-.15	-.65	-.76	-.96	-1.13
303	.26	.21	0	-.33	-.39	-.50	-.67
304	.36	.40	.45	.41	.41	.37	.31
305	.38	.48	.64	.78	.83	.85	.92
306	~~.28~~	~~.33~~	~~.34~~	~~.26~~	~~.26~~	~~.22~~	~~.15~~
307	.28	.25	.09	-.24	-.30	-.39	-.54
308	.19	.11	-.17	-.74	-.98	-1.11	-1.21
309	.06	0	-.11	-.22	-.22	-.26	-.33
310	.06	0	-.17	-.41	-.46	-.52	-.62
311	.09	.02	-.17	-.33	-.63	-.74	-.97
312	.15	.17	.17	.09	.07	.02	-.05
313	.19	.27	.40	.54	.59	.61	.67
314	.15	.17	.13	-.04	-.07	-.11	-.21
315	.13	.08	-.09	-.44	-.52	-.63	-.82
316	.11	.02	-.17	-.46	-.50	-.61	-.77
317	0	-.06	-.21	-.46	-.50	-.57	-.64
318	0	-.06	-.23	-.57	-.65	-.76	-.97
319	.04	.06	.04	-.07	-.07	-.11	-.18
320	.06	.13	.26	.41	.46	.48	.56
321	.02	.06	.06	-.02	-.02	-.07	-.10
322	0	-.04	-.19	-.50	-.57	-.67	-.85
323	-.02	-.08	-.23	-.48	-.52	-.61	-.72
324	-.17	-.21	-.28	-.41	-.44	-.50	-.56
325	-.04	.02	.13	.26	.30	.33	.38
326	-.06	-.06	-.06	-.16	-.16	-.20	-.23
327	-.34	-.38	-.45	-.52	-.50	-.52	-.51
328	-.09	-.17	-.36	-.65	-.70	-.78	-.90
329	.02	.06	.19	.35	.39	.44	.49
330	0	.04	.02	-.09	-.09	-.13	-.10
331	.06	.04	-.06	-.18	-.18	-.22	-.33
332	-.13	-.17	-.43	-.96	-.91	-.96	-1.21
333	-.13	-.06	.09	.20	.26	.28	.33
334	-.06	0	.15	.28	.35	.35	.38
335	-.11	-.15	-.32	-.52	-.63	-.76	-1.05
336	0	-.02	-.09	-.35	-.44	-.59	-.82
337	-.09	-.06	.04	.13	.18	.18	.18
338	-.04	0	.11	.20	.24	.24	.26
339	.02	0	-.06	-.28	-.33	-.46	-.64
340	~~2.66~~	~~2.61~~	~~2.64~~	~~2.65~~	~~2.65~~	~~2.63~~	~~3.03~~

Note: Lines have been drawn through the pressure coefficients for which the data are doubtful.

TABLE 20.– CONTINUED

(c) Fuselage (Concluded)

Orifice No. \ α	4.21	8.39	16.70	25.02	27.07	29.08	33.06
341	0	0.04	0.09	0.11	0.16	0.13	0.10
342	.09	.13	.17	.22	.24	.24	.21
343	-.34	-.35	-.60	-.83	-.85	-.96	-1.00
344	-.17	-.17	-.23	-.50	-.54	-.67	-.87
345	-.06	-.06	-.04	-.07	-.04	-.09	-.15
346	-.04	-.02	0	0	.02	-.02	-.10
347	.04	.06	.09	.11	.13	.11	.05
348	.11	.13	.15	.20	.22	.18	.15
349	.13	.15	.17	.18	.20	.16	.13
350	.04	.06	.04	-.04	-.07	-.13	-.26
351	.02	.02	.02	-.02	0	-.09	-.23
352	-.02	-.02	-.04	-.09	-.09	-.18	-.33
353	.15	.19	.21	.18	.18	.13	.03
354	.11	.13	.11	.07	.07	0	-.15
355	.04	.06	-.06	-.07	-.07	-.16	-.33
356	.02	.04	0	-.11	-.11	-.20	-.36
357	.04	.04	0	-.09	-.11	-.18	-.33
358	~~.36~~	~~.38~~	~~.34~~	~~.24~~	~~.22~~	~~.16~~	~~.08~~
359	0	0	0	-.09	-.09	-.18	-.26
360	-.06	-.08	-.11	-.20	-.20	-.28	-.38
361	-.21	-.23	-.23	-.28	-.26	-.30	-.46
362	-.06	-.06	-.09	-.16	-.16	-.22	-.36
363	.06	.06	.04	-.09	-.07	-.11	-.18
364	.09	.11	.11	.04	.04	-.02	-.13
365	.11	.11	.06	.04	.04	-.02	-.13
366	-.09	-.15	-.34	-.83	-1.00	-1.15	-1.13
367	.02	.11	.26	.37	.44	.46	.49
368	0	.08	.23	.37	.41	.46	.49
369	.13	.15	.21	.24	.26	.24	.21
370	.13	.15	.21	.24	.26	.24	.21
371	.17	.21	.23	.22	.22	.18	.13
372	.17	.21	.23	.22	.22	.18	.13

Note: A line has been drawn through the pressure coefficients for which the data are doubtful.

TABLE 20.– CONCLUDED

(d) Fuselage-duct rakes

Tube No. \ α	4.21	8.39	16.70	25.02	27.07	29.08	33.06
401 T.H.[a]	1.00	1.00	0.96	0.89	0.82	0.80	0.62
402 St.H.[b]	.08	.06	.06	.07	.02	0	-.13
403 T.H.	1.00	1.00	.96	.89	.84	.82	.69
404	-	-	-	-	-	-	-
405 St.H.	.17	.13	.06	.07	.02	-.02	-.18
406 T.H.	1.00	1.00	.96	.87	.80	.76	.62
407 T.H.	1.00	1.00	.94	.84	.80	.76	.62
408 St.H.	.19	.17	.13	.13	.07	0	-.13
409 T.H.	1.00	.98	.96	.87	.82	.78	.64
410 T.H.	1.00	.98	.96	.93	.89	.87	.74
411 St.H.	.15	.11	.11	.04	-.04	-.09	-.21
412 T.H.	1.00	1.00	.94	.84	.78	.73	.56
413 T.H.	1.00	.98	.94	.89	.89	.87	.62
414 St.H.	.04	-.02	-.04	-.33	-.44	-.51	-.79
415 T.H.	1.00	.98	.89	.72	.62	.56	.36
416 T.H.	.98	.98	.92	.70	-.02	.04	.03
417 St.H.	-.15	-.19	-.17	-.41	-.53	-.56	-.54
418 T.H.	.98	.92	.69	.48	.29	.02	-.44
501 T.H.	.78	.77	.62	.46	.38	.33	.21
522 St.H.	.76	.73	.58	.44	.38	.31	.18
503 T.H.	.80	.81	.62	.48	.40	.33	.21
504 T.H.	.82	.81	.62	.48	.40	.36	.21
505 St.H.	.74	.73	.58	.44	.36	.31	.18
506 T.H.	.82	.79	.62	.48	.40	.36	.28
507 T.H.	.80	.77	.62	.48	.40	.36	.28
508 St.H.	.74	.71	.58	.44	.36	.31	.18
509 T.H.	.82	.77	.62	.48	.42	.36	.28
510 T.H.	.84	.79	.62	.46	.40	.33	.15
511 St.H.	.74	.73	.58	.44	.38	.31	.18
512 T.H.	.89	.83	.67	.48	.40	.36	.21
513	-	-	-	-	-	-	-
514 St.H.	.76	.73	.58	.44	.36	.31	.18
515 T.H.	.93	.87	.67	.48	.40	.36	.21
516 T.H.	.91	.85	.67	.48	.42	.36	.21
517 St.H.	.74	.71	.58	.44	.36	.31	.18
518	-	-	-	-	-	-	-
519 T.H.	.89	.85	.67	.48	.40	.36	.21
520 St.H.	.74	.71	.58	.44	.38	.31	.18
521 T.H.	.80	.77	.62	.46	.40	.33	.21
522 St.H.	.74	.71	.58	.44	.36	.31	.18
523 T.H.	.74	.71	.58	.43	.36	.31	.18

[a]Total-head tube (coefficient given as P_t).

[b]Static-head tube (coefficient given as P_s).

TABLE 21.– PRESSURE COEFFICIENTS FOR THE FLYING MOCK-UP OF THE XP-92 AIRPLANE, $\beta = 0.13^{\circ}$, $\delta_e = 0^{\circ}$, $\delta_a = \mp 10^{\circ}$, $\delta_r = 0^{\circ}$

(a) Wing

Orifice No. \ α	4.21	8.39	16.70	25.02	27.07	29.08	33.06
101	0.04	0.14	0.38	0.56	0.63	0.67	0.68
102	-.15	-.27	-.53	-.94	-1.07	-1.40	-1.79
103	--	--	--	--	--	--	--
104	--	--	--	--	--	--	--
105	.11	.20	.34	.40	.41	.44	.42
106	-.23	-.45	-1.06	-3.81	-3.33	-2.91	-1.89
107	.17	.24	.04	-.23	-.24	-.24	-.21
108	-.38	-.82	-2.85	-3.19	-2.85	-2.56	-1.74
109	0	.10	.27	.42	.46	.51	.50
110	-.19	-.27	-.42	-.73	-.87	-.87	-.95
111	.02	.12	.32	.46	.52	.56	.55
112	-.26	-.37	-.59	-1.67	-1.93	-1.89	-1.82
113	.09	.20	.34	.40	.41	.44	.42
114	-.32	-.53	-2.64	-2.17	-2.00	-1.78	-1.42
115	.17	.22	.15	.06	.07	.07	.03
116	-.47	-.94	-2.60	-1.81	-1.74	-1.56	-1.24
117	-.11	0	.13	.27	.30	.36	.37
118	-.21	-.27	-.36	-.69	-.67	-.67	-.82
119	-.04	.02	.19	.33	.37	.42	.42
120	-.26	-.31	-.47	-.79	-.89	-1.00	-1.08
121	.02	.10	.30	.42	.46	.49	.50
122	-.30	-.39	-.49	-1.59	-1.57	-1.44	-1.29
123	.11	.16	.32	.35	.37	.40	.37
124	-.36	-.57	-2.43	-1.57	-1.59	-1.33	-1.16
125	.13	.20	.28	.19	.20	.22	.13
126	-.51	-.94	-1.79	-1.36	-1.26	-1.16	-1.05
127	-.02	.02	.13	.21	.24	.29	.26
128	-.32	-.33	-.43	-.71	-.67	-.67	-.82
129	0	.06	.17	.27	.30	.33	.32
130	-.32	-.33	-.47	-.83	-.89	-.91	-1.03
131	.04	.10	.21	.29	.33	.36	.34
132	-.36	-.43	-.66	-1.44	-1.20	-1.16	-1.13
133	.09	.18	.30	.33	.37	.40	.37
134	-.43	-.59	-1.23	-1.15	-1.09	-1.02	-.97
135	.17	.29	.32	.29	.30	.29	.26
136	-.66	-.92	-1.00	-1.00	-.98	-1.00	-1.34
137	.17	.20	.26	.27	.30	-1.02	.26
138	-.32	-.33	-.43	-.63	.67	-.76	-.82

TABLE 21.- CONTINUED

(a) Wing (Concluded)

Orifice No. \ α	4.21	8.39	16.70	25.02	27.07	29.08	33.06
139	0.21	0.24	0.30	0.31	0.33	0.36	0.32
140	-.34	-.37	-.49	-.81	-.87	-.87	-.95
141	.21	.24	.30	.31	.30	.33	.32
142	-.38	-.45	-.60	-1.00	-1.00	-.98	-1.00
143	.23	.29	.32	.35	.37	.38	.37
144	-.57	-.69	-.83	-.94	-.89	-.87	-.89
145	.28	.31	.32	.29	.30	.31	.26
146	-1.00	-.92	-.72	-.81	-.83	-.80	-.87
147	.30	.29	.26	.19	.18	.16	.05
148	-.87	-.92	-1.06	-1.36	-1.48	-1.53	-1.26
149	~~-.11~~	~~-.10~~	~~-.15~~	~~-.31~~	~~-.33~~	~~-.33~~	~~.39~~
150	-.85	-.86	-.98	-1.48	-1.41	-1.36	-1.21
151	-.23	-.27	-.40	-.54	-.52	-.73	-.55
152	-1.02	-1.10	-1.26	-1.25	-1.17	-1.11	-1.05
153	-.40	-.43	-.40	-.46	-.46	-.44	-.47
154	-1.38	-1.12	-.87	-.96	-.93	-.89	-.95
155	.49	.51	.53	.50	.52	.51	.47
156	-.91	-.88	-.74	-.83	-.83	-.80	-.82
157	.21	.22	.28	.29	.30	.31	.24
158	-.23	-.24	-.32	-.56	-.63	-.69	-.76
159	.23	.27	.30	.29	.30	.31	.24
160	-.23	-.27	-.36	-.73	-.78	-.80	-.89
161	.21	.20	.21	.21	.22	.22	.21
162	-.30	-.41	-.70	-.94	-.91	-.89	-.92
163	.21	.21	.26	.27	.28	.31	.32
164	-.51	-.84	-.70	-.79	-.80	-.78	-.82
165	.23	.24	.30	.29	.30	.33	.32
166	-1.13	-.82	-.64	-.75	-.78	-.76	-.82
167	.13	.14	.17	.40	.13	.11	-.13
168	.06	.08	.06	.04	-.04	-.11	-.42
169	.11	.10	.06	-.13	-.13	-.22	-.39
170	.09	.06	-.04	-.35	-.46	-.56	-.76
171	.13	.06	-.19	-.33	-.37	-.38	-.42
172	.06	-.08	-.53	-.75	-.78	-.80	-.87
173	.06	-.22	-.19	-.23	-.24	-.22	-.26
174	-.17	-.69	-.60	-.73	-.74	-.76	-.82
175	-.30	-.31	-.26	-.27	-.30	-.31	-.32
176	-.47	-.59	-.55	-.65	-.67	-.71	-.76

Note: A line has been drawn through the pressure coefficients for which the data are doubtful.

TABLE 21.- CONTINUED

(b) Vertical tail

Orifice No. \ α	4.21	8.39	16.70	25.02	27.07	29.08	33.06
201	0	-0.04	-0.13	-0.30	-0.35	-0.37	-0.68
202	-.18	-.19	-.26	-.38	-.37	-.39	-.57
203	-.09	-.11	-.22	-.38	-.41	-.46	-.78
204	~~.18~~	~~.19~~	~~.18~~	~~.15~~	~~.13~~	~~.11~~	~~.03~~
205	-.09	-.11	-.20	-.38	-.41	-.46	-.81
206	~~.16~~	~~.19~~	~~.22~~	~~.23~~	~~.20~~	~~.18~~	~~.14~~
207	-.09	-.13	-.20	-.38	-.41	-.44	-.78
208	-.18	-.19	-.30	-.45	-.46	-.46	-.73
209	-.09	-.11	-.24	-.40	-.46	-.48	-.73
210	-.22	-.25	-.30	-.40	-.41	-.46	-.62
211	-.09	-.15	-.24	-.43	-.48	-.50	-.76
212	-.22	-.27	-.33	-.49	-.50	-.52	-.70
213	-.13	-.17	-.28	-.49	-.52	-.57	-.86
214	-.22	-.27	-.33	-.51	-.52	-.57	-.81
215	-.09	-.11	-.20	-.40	-.44	-.50	-.76
216	~~-.26~~	~~-.29~~	~~-.35~~	~~-.53~~	~~-.54~~	~~-.61~~	~~-.84~~
217	-.04	-.08	-.16	-.32	-.35	-.41	-.65
218	-.28	-.29	-.30	-.38	-.41	-.41	-.54
219	-.13	-.15	-.24	-.43	-.50	-.52	-.78
220	-.28	-.29	-.33	-.49	-.52	-.57	-.78
221	-.16	-.19	-.28	-.51	-.59	-.67	-.92
222	-.30	-.33	-.39	-.60	-.63	-.70	-.92
223	-.13	-.17	-.26	-.51	-.59	-.65	-.89
224	-.30	-.33	-.37	-.62	-.67	-.74	-.89
225	-.11	-.11	-.18	-.30	-.33	-.37	-.54
226	-.26	-.23	-.24	-.30	-.33	-.37	-.51
227	-.11	-.06	-.11	-.26	-.30	-.37	-.57
228	-.11	-.13	-.16	-.30	-.33	-.39	-.59

Note: Lines have been drawn through the pressure coefficients for which the data are doubtful.

TABLE 21.- CONTINUED

(b) Vertical tail (Concluded)

Orifice No. \ α	4.21	8.39	16.70	25.02	27.07	29.08	33.06
229	~~0.16~~	~~0.19~~	~~0.22~~	~~0.23~~	~~0.20~~	~~0.16~~	~~0.14~~
230	-.11	-.11	-.18	-.32	-.39	-.48	-.70
231	-.02	-.02	-.09	-.30	-.35	-.44	-.62
232	-.16	-.17	-.22	-.40	-.48	-.54	-.70
233	-.09	-.08	-.11	-.23	-.26	-.30	-.49
234	-.26	-.25	-.24	-.30	-.30	-.35	-.49
235	-.04	-.04	-.09	-.19	-.24	-.28	-.46
236	-.18	-.19	-.22	-.30	-.35	-.39	-.57
237	.02	.02	-.04	-.19	-.24	-.33	-.54
238	-.06	-.27	-.09	-.23	-.30	-.37	-.62
239	.02	.02	-.27	-.23	-.30	-.37	-.54
240	-.11	-.13	-.18	-.36	-.44	-.50	-.65
241	-.11	-.13	-.13	-.26	-.28	-.30	-.49
242	-.22	-.21	-.20	-.26	-.28	-.30	-.46
243	-.02	-.02	-.04	-.15	-.20	-.24	-.41
243	-.09	-.08	-.11	-.19	-.24	-.28	-.43
245	.02	.02	-.02	-.19	-.24	-.30	-.51
246	-.02	-.02	-.07	-.19	-.26	-.35	-.59
247	.02	.02	-.02	-.19	-.24	-.33	-.51
248	-.07	-.06	-.09	-.28	-.13	-.41	-.59
249	-.09	-.08	-.11	-.19	-.22	-.26	-.38
250	-.13	-.13	-.13	-.23	-.26	-.28	-.41
251	.07	.06	.02	-.06	-.09	-.16	-.32
252	.04	.04	.02	-.06	-.11	-.16	-.35
253	.04	.04	.02	-.11	-.16	-.24	-.43
254	.07	.06	.04	-.09	-.13	-.20	-.41
255	.04	.04	0	-.15	-.20	-.28	-.46
256	.04	.04	.02	-.13	-.20	-.28	-.46

Note: A line has been drawn through the pressure coefficients for which the data are doubtful.

TABLE 21.- CONTINUED

(c) Fuselage

Orifice No.	4.21	8.39	16.70	25.02	27.07	29.08	33.06
301	0.15	0.04	-0.19	-0.81	-0.94	-1.00	-1.16
302	.19	.10	-.15	-.61	-.74	-.87	-1.14
303	.26	.20	0	-.29	-.38	-.48	-.68
304	.36	.39	.45	.44	.40	.39	.32
305	.36	.47	.64	.79	.83	.85	.92
306	.28	.33	.34	.27	.26	.22	.16
307	.30	.24	.09	-.23	-.30	-.39	-.57
308	.19	.08	-.17	-.77	-.91	-1.11	-1.22
309	.06	0	-.11	-.21	-.21	-.24	-.32
310	.06	0	-.17	-.38	.45	-.50	-.38
311	.09	.04	-.17	-.50	-.62	-.93	-1.00
312	.15	.16	.17	.13	.06	.04	.04
313	.19	.29	.40	.56	.57	.61	.68
314	.15	.16	.15	-.02	-.04	-.11	-.24
315	.13	.08	-.09	-.42	-.49	-.61	-.86
316	.11	.04	-.17	-.42	-.49	-.57	-.78
317	0	-.06	-.21	-.44	-.49	-.54	-.68
318	0	-.06	-.23	-.54	-.64	-.72	-.97
319	.04	.06	-.04	-.04	-.06	-.07	-.16
320	.06	.14	.26	.42	.45	.50	.57
321	.06	.08	.06	0	-.02	-.07	-.14
322	0	-.04	-.17	-.48	-.53	-.65	-.89
323	-.02	-.06	-.23	-.46	-.51	-.57	-.70
324	-.17	-.20	-.28	-.42	-.43	-.48	-.57
325	-.02	.02	.13	.25	.30	.37	.43
326	-.06	-.06	-.06	-.13	-.13	-.18	-.24
327	-.32	-.37	-.45	-.48	-.49	-.50	-.51
328	-.09	-.16	-.36	-.63	-.70	-.76	-.92
329	.04	.08	.17	.35	.38	.41	.49
330	.04	.04	.02	-.06	-.06	-.11	-.14
331	.06	.04	-.04	-.15	-.17	-.18	-.38
332	-.23	-.27	-.53	-.96	-.91	-.98	-1.24
333	-.13	-.06	.06	.23	.26	.30	.35
334	-.09	-.02	.13	.27	.32	.33	.38
335	-.28	-.33	-.45	-.65	-.68	-.78	-1.05
336	-.26	-.27	-.34	-.58	-.66	-.76	-.97

Note: A line has been drawn through the pressure coefficient for which the data are doubtful.

TABLE 21.– CONTINUED

(c) Fuselage (Concluded)

Orifice No. \ α	4.21	8.39	16.70	25.02	27.07	29.08	33.06
337	-0.09	-0.06	0.04	0.15	0.17	0.18	0.19
338	-.11	-.06	.04	.15	.15	.16	.16
339	-.17	-.16	-.21	-.48	-.53	-.67	-.89
340	~~2.62~~	~~2.53~~	~~2.60~~	~~2.55~~	~~2.60~~	~~2.63~~	~~3.14~~
341	.02	.04	-.09	.15	.15	.16	.11
342	-.06	-.04	0	.06	.06	.07	.02
343	.02	0	-.06	-.21	-.23	-.33	-.57
344	0	0	-.06	-.25	-.32	-.44	-.65
345	.09	.10	.15	.17	.17	.16	.11
346	.09	.10	.15	.19	.17	.16	.14
347	.04	.04	.11	.13	.13	.11	.05
348	-.04	-.02	0	.04	.04	0	-.08
349	-.06	-.06	.02	0	0	-.02	-.11
350	.04	.04	0	-.11	-.13	-.18	-.35
351	.04	.06	-.09	-.04	-.06	-.16	-.32
352	.11	.12	.13	.09	.06	0	-.16
353	-.06	-.04	-.02	-.04	-.06	-.11	-.16
354	-.04	-.04	-.06	-.04	-.09	-.16	-.30
355	.02	.02	.02	0	-.02	-.07	-.19
356	.04	.04	.04	-.04	-.06	-.11	-.24
357	.04	.04	.02	-.09	-.11	-.18	-.32
358	~~.36~~	~~.37~~	~~.34~~	~~.25~~	~~.21~~	~~.16~~	~~.08~~
359	.09	.08	.04	-.02	-.04	-.07	-.14
360	-.02	-.04	-.06	-.11	-.15	-.18	-.32
361	.19	-.27	-.28	-.29	-.32	-.35	-.43
362	-.11	-.14	-.19	-.25	-.30	-.39	-.51
363	-.02	-.04	-.04	-.06	-.09	-.18	-.27
364	.02	0	.02	-.04	-.06	-.11	-.22
365	.09	.08	.09	.04	.04	-.02	-.11
366	-.15	-.18	-.38	-.83	-1.04	-1.15	-1.41
367	0	.08	.23	.38	.40	-.41	-.46
368	0	.08	.23	.38	.43	-.46	-.51
369	.13	.14	.23	.25	.26	.24	.19
370	.13	.16	.23	.25	.26	.24	.19
371	.17	.20	.23	.25	.21	.18	.14
372	.17	.20	.23	.25	.21	.18	.14

Note: Lines have been drawn through the pressure coefficients for which the data are doubtful.

TABLE 21.- CONCLUDED

(d) Fuselage-duct rakes

Tube No. \ α	4.21	8.39	16.70	25.02	27.07	29.08	33.06
401 T.H.[a]	1.00	0.98	0.96	0.87	0.83	0.80	0.62
402 St.H.[b]	.09	.06	.06	.04	.04	-.02	-.11
403 T.H.	.98	.98	.94	.87	.85	.80	.70
404	-	-	-	-	-	-	-
405 St.H.	.17	.12	.06	.04	.04	0	-.05
406 T.H.	1.00	.98	.98	.85	.81	.76	.62
407 T.H.	1.00	.98	.98	.83	.79	.78	.62
408 St.H.	.19	.16	.11	.13	.09	0	-.11
409 T.H.	1.00	.98	.94	.85	.83	.76	.65
410 T.H.	1.00	.98	.96	.89	.89	.84	.76
411 St.H.	.15	.10	.08	.04	-.02	-.09	-.22
412 T.H.	.98	.98	.94	.83	.79	.78	.57
413 T.H.	.98	.98	.94	.87	.87	.87	.68
414 St.H.	.06	-.02	-.04	-.35	-.40	-.50	-.81
415 T.H.	.98	.98	.89	.69	.62	.54	.35
416 T.H.	.98	.96	.89	.65	.62	.09	.03
417 St.H.	-.15	-.18	-.19	-.42	-.51	-.57	-.54
418 T.H.	.96	.90	.67	.44	.30	0	-.46
501 T.H.	.77	.76	.60	.48	.40	.33	.22
502 St.H.	.72	.71	.58	.42	.38	.33	.19
503 T.H.	.79	.80	.62	.44	.40	.33	.22
504 T.H.	.81	.80	.62	.44	.40	.35	.22
505 St.H.	.72	.71	.58	.42	.38	.30	.19
506 T.H.	.79	.80	.60	.44	.43	.37	.22
507 T.H.	.79	.76	.60	.44	.43	.37	.22
508 St.H.	.72	.69	.58	.42	.38	.30	.19
509 T.H.	.83	.76	.60	.44	.43	.37	.22
510 T.H.	.83	.80	.60	.44	.40	.33	.24
511 St.H.	.72	.69	.58	.42	.38	.30	.19
512 T.H.	.87	.84	.65	.44	.43	.35	.22
513	-	-	-	-	-	-	-
514 St.H.	.72	.69	.58	.44	.38	.30	.19
515 T.H.	.91	.86	.67	.46	.40	.37	.22
516 T.H.	.89	.84	.67	.46	.40	.37	.22
517 St.H.	.72	.69	.58	.44	.38	.30	.19
518	-	-	-	-	-	-	-
519 T.H.	.89	.84	.67	.44	.43	.37	.22
520 St.H.	.72	.69	.58	.42	.38	.30	.19
521 T.H.	.81	.76	.62	.44	.40	.33	.22
522 St.H.	.72	.69	.56	.46	.38	.30	.19
523 T.H.	.72	.69	.56	.56	.36	.30	.24

[a]Total-head tube (coefficient given as P_t).

[b]Static-head tube (coefficient given as P_s).

TABLE 22.– PRESSURE COEFFICIENTS FOR THE FLYING MOCK-UP OF THE XP-92 AIRPLANE, $\beta = 0.13^{\circ}$, $\delta_e = -10^{\circ}$, $\delta_a = \pm 10^{\circ}$, $\delta_r = 0^{\circ}$

(a) Wing

Orifice No. \ α	3.99	8.15	16.50	24.85	26.91	28.95	33.00
101	0	0.11	0.36	0.58	0.59	0.65	0.69
102	-.11	-.21	-.47	-.88	-1.11	-1.40	-1.79
103	–	–	–	–	–	–	–
104	–	–	–	–	–	–	–
105	.06	.19	.34	.44	.22	.45	.44
106	-.17	-.38	-.98	-3.12	-2.67	-2.28	-1.90
107	.15	.26	.06	-.08	-.16	-.13	-.18
108	-.30	-.68	-2.53	-2.59	-2.33	-2.06	-1.77
109	-.06	.04	.23	.40	.41	.45	.49
110	-.11	-.17	-.32	-2.73	-.83	-.77	-.87
111	-.04	.06	.24	.44	.46	.50	.54
112	-.15	-.26	-.47	-1.52	-1.65	-1.54	-1.46
113	.02	.15	.32	.42	.41	.44	.44
114	-.19	-.40	-2.06	-1.65	-1.59	-1.38	-1.36
115	.11	.21	.19	.17	.11	.11	.08
116	-.28	-.68	-2.28	-1.40	-1.39	-1.22	-1.15
117	-.21	-.13	.04	.21	.22	.26	.31
118	.06	-.11	-.21	-.56	-.57	-.59	-.74
119	.17	-.09	.11	.27	.30	.35	.38
120	.09	-.15	-.32	-.67	-.80	-.87	-1.03
121	-.11	0	.21	.35	.37	.41	.46
122	-.13	-.19	-.34	-1.25	-1.28	-1.20	-1.23
123	0	.11	.26	.33	.33	.35	.33
124	-.17	-.34	-1.64	-1.15	-1.15	-1.07	-1.05
125	.02	.17	.28	.25	.22	.22	.15
126	-.23	-.57	-1.26	-.98	-1.00	-.91	-.97
127	-.26	-.19	-.04	.04	.04	.09	.13
128	.02	0	-.13	-.44	-.50	-.54	-.72
129	-.23	-.17	-.04	.06	.09	.13	.15
130	.04	0	-.15	-.61	-.72	-.76	-.95
131	-.23	-.19	0	.13	.13	.16	.18
132	0	-.06	-.45	-.92	-.96	-.91	-1.03
133	-.17	-.06	.11	.21	.22	.24	.26
134	-.04	-.17	-.51	-.79	-.83	-.78	-.90
135	-.09	.09	.23	.25	.24	.24	.23
136	-.13	-.40	-.57	-.71	-.74	-.70	-.87
137	-.45	-.43	-.36	-.31	-.33	-.30	-.31

TABLE 22.– CONTINUED

(a) Wing (Concluded)

Orifice No. \ α	3.99	8.15	16.50	24.85	26.91	28.95	33.00
138	0.30	0.30	0.23	0.06	-0.02	-0.16	-0.41
139	-.43	-.40	-.34	-.31	-.33	-.30	-.33
140	.36	.34	.23	-.25	-.44	-.54	-.74
141	-.53	-.47	-.43	-.40	-.41	-.39	-.38
142	.40	.34	-.04	-.63	-.70	-.72	-.62
143	-.28	-.26	-.26	-.23	-.24	-.20	-.18
144	.51	.23	-.38	-.58	-.63	-.67	-.77
145	-.40	-.26	-.15	-.04	-.07	-.04	-.03
146	.28	.13	-.32	-.52	-.59	-.61	-.72
147	-1.13	-1.17	-1.17	-1.17	-1.26	-1.26	-1.31
148	.19	.21	.17	.11	.07	.04	-.05
149	-.40	-.36	-.23	-.56	-.63	-.65	-.74
150	-.26	-.26	-.34	-.56	-.63	-.63	-.72
151	-1.47	-1.51	-1.60	-1.69	-1.74	-1.74	-1.77
152	-.55	-.53	-.60	-.60	-.65	-.70	-.85
153	-1.32	-1.30	-1.38	-1.40	-1.46	-1.43	-1.44
154	-.49	-.43	-.43	-.54	-.59	-.63	-.69
155	-.68	-.53	-.40	-.31	-.35	-.37	-.38
156	.38	.17	-.28	-.48	-.54	-.61	-.69
157	-.19	-.40	-.38	-.38	-.39	-.41	-.46
158	.32	.30	.30	.23	.13	-.02	-.26
159	-.45	-.43	-.36	-.38	-.44	-.44	-.49
160	.38	.36	.28	-.23	-.41	-.54	-.72
161	-.51	-.43	-.43	-.46	-.50	-.50	-.54
162	.36	.32	-.26	-.63	-.70	-.70	-.82
163	-.60	-.47	.45	-.40	-.44	-.41	-.44
164	.30	.23	-.23	-.46	-.54	-.59	-.69
165	-.57	-.45	-.30	-.25	-.26	-.24	-.23
166	.23	.13	-.19	-.44	-.50	-.54	-.64
167	.04	.04	.06	.08	.02	-.02	-.13
168	.17	.17	.21	.42	.16	.04	-.13
169	.02	.04	.07	-.17	-.28	-.37	-.51
170	.15	.15	.17	-.21	-.35	-.46	-.67
171	.17	-.06	-.11	-.35	-.44	-.46	-.54
172	.04	.09	-.19	-.48	-.57	-.61	-.74
173	0	.06	-.04	-.40	-.28	-.35	-.41
174	.11	.11	-.09	-.33	-.41	-.48	-.56
175	.66	.11	-.09	-.21	-.28	-.33	-.41
176	.06	.09	.04	-.21	-.35	-.44	-.56

Note: A line has been drawn through the pressure coefficient for which the data are doubtful.

TABLE 22.- CONTINUED

(b) Vertical tail

Orifice No. \ α	3.99	8.15	16.50	24.85	26.91	28.95	33.00
201	-0.06	-0.11	-0.19	-0.35	-0.38	-0.40	-0.67
202	-.02	-.02	-.13	-.25	-.28	-.26	-.41
203	-.13	-.15	-.26	-.40	-.43	-.36	-.74
204	~~.17~~	~~.17~~	~~.17~~	~~.13~~	~~.11~~	~~.09~~	~~.03~~
205	-.11	-.13	-.23	-.38	-.40	-.43	-.74
206	~~.11~~	~~.13~~	~~.17~~	~~.19~~	~~.19~~	~~.11~~	~~.10~~
207	-.11	-.15	-.23	-.38	-.40	-.43	-.69
208	.06	-.11	-.19	-.35	-.38	-.40	-.59
209	-.19	-.21	-.30	-.46	-.49	-.51	-.64
210	.02	-.04	-.13	-.27	-.30	-.36	-.54
211	-.17	-.19	-.28	-.44	-.47	-.51	-.67
212	-.06	-.11	-.17	-.33	-.38	-.43	-.64
213	-.19	-.21	-.30	-.48	-.53	-.57	-.77
214	-.06	-.11	-.19	-.38	-.43	-.49	-.74
215	-.13	-.15	-.23	-.40	-.45	-.47	-.67
216	~~-.11~~	~~-.13~~	~~-.21~~	~~-.40~~	~~-.45~~	~~-.53~~	~~-.77~~
217	-.23	-.26	-.30	-.42	-.45	-.45	-.56
218	.02	0	-.09	-.21	-.23	-.32	-.49
219	-.21	-.21	-.28	-.44	-.49	-.55	-.74
220	-.04	-.06	-.15	-.33	-.38	-.47	-.69
221	-.23	-.23	-.32	-.50	-.57	-.68	-.87
222	-.09	-.09	-.19	-.42	-.49	-.60	-.82
223	-.21	-.23	-.32	-.52	-.57	-.66	-.79
224	-.06	-.09	-.19	-.44	-.51	-.62	-.79
225	-.21	-.21	-.23	-.31	-.34	-.38	-.49
226	-.04	-.04	-.09	-.19	-.21	-.28	-.41
227	-.09	-.09	-.11	-.23	-.28	-.36	-.51
228	0	0	-.04	-.17	-.21	-.32	-.46

Note: Lines have been drawn through the pressure coefficients for which the data are doubtful.

TABLE 22.– CONTINUED

(b) Vertical tail (Concluded)

Orifice No. \ α	3.99	8.15	16.50	24.85	26.91	28.95	33.00
229	~~0.11~~	~~0.13~~	~~0.17~~	~~0.19~~	~~0.19~~	~~0.19~~	~~0.10~~
230	.04	.02	–.02	–.19	–.26	–.36	–.54
231	–.06	–.06	–.11	–.29	–.34	–.45	–.74
232	.06	.06	.02	–.19	–.21	–.36	–.51
233	0	–.21	–.21	–.29	–.30	–.34	–.44
234	–.04	–.04	–.09	–.15	–.19	–.26	–.38
235	–.06	–.09	–.11	–.19	–.21	–.28	–.41
236	–.06	–.09	–.11	–.21	–.26	–.32	–.46
237	0	0	–.04	–.17	–.21	–.32	–.51
238	.09	.09	.04	–.11	–.19	–.28	–.46
239	–.02	–.02	–.06	–.21	–.28	–.38	–.54
240	.09	.06	.02	–.15	–.21	–.32	–.46
241	–.19	–.19	–.19	–.25	–.28	–.32	–.41
242	–.04	–.04	–.09	–.17	–.19	–.23	–.36
243	–.02	–.02	–.04	–.13	–.17	–.21	–.36
244	.02	0	–.06	–.13	–.17	–.21	–.36
245	.02	.02	–.02	–.15	–.19	–.30	–.49
246	.08	.09	.04	–.11	–.15	–.23	–.44
247	.02	.02	–.02	–.17	–.21	–.34	–.46
248	.11	.11	.06	–.11	–.15	–.26	–.38
249	–.11	–.09	–.09	–.08	–.11	–.11	–.23
250	–.04	–.09	–.11	–.17	–.19	–.23	–.33
251	.11	.09	.06	–.02	–.07	–.13	–.26
252	.11	.11	.09	0	–.04	–.11	–.26
253	.09	.09	.04	–.06	–.11	–.19	–.36
254	.13	.13	.11	0	–.06	–.15	–.31
255	.09	.09	.04	–.08	–.19	–.23	–.38
256	.13	.13	.09	–.02	–.09	–.17	–.31

Note: A line has been drawn through the pressure coefficients for which the data are doubtful.

TABLE 22.- CONTINUED

(c) Fuselage

Orifice No. \ α	3.99	8.15	16.50	24.85	26.91	28.95	33.00
301	0.16	0.06	-0.19	-0.81	-0.98	-1.04	-1.11
302	.20	.11	.06	-.63	-.77	-.96	-1.11
303	.24	.21	0	-.31	-.40	-.50	-.66
304	.35	.40	.45	.42	.40	.39	.34
305	.39	.48	.64	.79	.83	.87	.92
306	~~.28~~	~~.31~~	~~.32~~	~~.27~~	~~.23~~	~~.22~~	~~.16~~
307	.30	.25	.09	-.23	-.34	-.40	-.58
308	.20	.11	-.17	-.73	-.98	-1.13	-1.24
309	.07	.02	-.11	-.21	-.26	-.26	-.32
310	.07	.02	-.19	-.19	-.47	-.52	-.66
311	.09	.04	-.19	-.54	-.66	-.76	-.97
312	.13	.19	.15	.08	.04	.02	.11
313	.20	.27	.38	.54	.60	.61	.68
314	.16	.19	.11	-.02	-.09	-.11	-.22
315	.11	.08	-.11	-.44	-.55	-.63	-.86
316	.09	.02	-.17	-.44	-.53	-.61	-.78
317	0	-.02	-.21	-.46	-.51	-.57	-.68
318	0	-.02	-.23	-.56	-.68	-.76	-1.00
319	.02	.06	.02	-.04	-.09	-.11	-.19
320	.04	.13	.23	.42	.45	.50	.57
321	.02	.06	-.15	-.02	-.04	-.26	-.11
322	-.02	-.02	-.19	-.48	-.60	-.70	-.86
323	-.02	-.06	-.23	-.46	-.55	-.61	-.73
324	-.18	-.19	-.30	-.42	-.47	-.48	-.55
325	-.04	.02	.11	.27	.30	.35	.42
326	-.09	-.04	-.06	-.15	-.17	-.20	-.24
327	-.35	-.35	-.47	-.48	-.51	-.50	-.50
328	-.09	-.15	-.36	-.61	-.70	-.74	-.89
329	-.02	.06	.17	.33	.38	.41	.50
330	-.02	.04	0	-.06	-.13	-.13	-.11
331	.07	.04	-.04	-.15	-.17	-.20	-.32
332	-.09	-.11	-.32	-.90	-.89	-.89	-1.19
333	-.22	-.13	0	.17	.21	.24	.29
334	-.13	-.04	.09	.25	.30	.33	.37
335	-.02	-.02	-.21	-.46	-.57	-.74	-.97
336	.11	.13	0	-.23	-.32	-.50	-.68
337	-.20	-.15	-.04	.06	.09	.11	.13
338	-.16	-.08	0	.13	.17	.18	.21
339	.11	.11	.04	-.15	-.21	-.37	-.53
340	~~2.65~~	~~2.57~~	~~2.58~~	~~2.52~~	~~2.58~~	~~2.61~~	~~.42~~

Note: Lines have been drawn through the pressure coefficients for which the data are doubtful.

TABLE 22.- CONTINUED

(c) Fuselage (Concluded)

Orifice No. \ α	3.99	8.15	16.50	24.85	26.95	28.95	33.00
341	-0.11	-0.06	-0.04	0.02	0.04	0.04	0.05
342	-.07	-.02	.04	.11	.13	.13	.11
343	-.13	-.15	-.34	-.48	-.51	-.63	-.79
344	-.09	-.06	-.13	-.33	-.40	-.52	-.71
345	-.24	-.25	-.28	-.27	-.26	-.30	-.37
346	-.22	-.19	-.19	-.19	-.17	-.20	-.24
347	-.09	-.02	-.02	.02	.04	.02	0
348	-.02	.02	.06	.11	.11	.09	.08
349	-.02	.04	.04	.08	.11	.09	.08
350	.02	.06	.04	-.04	-.09	-.13	-.16
351	0	0	-.02	-.02	-.04	-.07	-.16
352	-.13	-.13	-.17	-.19	-.19	-.26	-.37
353	.13	.15	.17	.19	.17	.18	.11
354	.09	.11	.09	.11	.06	.04	-.05
355	.04	.06	.04	-.04	-.04	-.09	-.21
356	.07	.06	.04	-.02	-.04	-.09	-.18
357	.09	.08	.04	-.02	-.04	-.11	-.21
358	~~-.35~~	~~-.35~~	~~-.30~~	~~-.21~~	~~-.19~~	~~-.07~~	~~.08~~
359	-.04	-.02	-.04	-.06	-.09	-.11	-.16
360	-.16	-.15	-.19	-.19	-.21	-.24	-.29
361	-.28	-.23	-.26	-.27	-.30	-.33	-.37
362	-.09	-.06	-.09	-.08	-.11	-.16	-.29
363	.02	.04	.02	-.04	-.04	-.09	-.13
364	.07	.08	.06	.04	.04	0	-.08
365	.07	.08	.06	.04	.04	0	-.05
366	-.07	-.08	-.28	-.73	-.96	-1.07	-1.32
367	-.07	.04	.19	.38	.40	.41	.47
368	-.07	.04	.17	.35	.40	.41	.47
369	.09	.15	.17	.21	.21	.22	.21
370	.09	.15	.17	.21	.23	.22	.21
371	.09	.15	.17	.17	.17	.16	.11
372	.09	.15	.17	.17	.17	.16	.11

Note: A line has been drawn through the pressure coefficients for which the data are doubtful.

TABLE 22.- CONCLUDED

(d) Fuselage duct rakes

Tube No. \ α	3.99	8.15	16.50	24.85	26.91	28.95	33.00
401 T.H.[a]	1.00	0.98	0.98	0.89	0.85	0.78	0.69
402 St.H.[b]	.04	-.02	-.02	.06	.04	-.02	-.08
403 T.H.	1.00	.98	.96	.89	.85	.78	.77
404	- - -	- - -	- - -	- - -	- - -	- - -	- - -
405 St.H.	.13	.08	.02	.04	.04	-.02	-.13
406 T.H.	1.00	.98	.96	.85	.81	.74	.71
407 T.H.	1.00	.98	.96	.85	.81	.74	.69
408 St.H.	.17	.11	.11	.13	.08	0	-.08
409 T.H.	1.00	.98	.96	.87	.81	.74	.73
410 T.H.	1.00	.98	.98	.91	.89	.84	.81
411 St.H.	.11	.06	.08	.04	-.02	-.09	-.15
412 T.H.	1.00	.98	.96	.83	.79	.72	.69
413 T.H.	1.00	.98	.96	.89	.87	.84	.77
414 St.H.	.02	-.08	-.08	-.34	-.42	-.50	-.58
415 T.H.	1.00	.98	.94	.70	.62	.54	.50
416 T.H.	1.00	.98	.94	.70	-.02	.07	.23
417 St.H.	-.19	-.23	-.21	-.45	-.44	-.50	-.40
418 T.H.	.98	.92	.69	.45	.33	-.02	-.11
501 T.H.	.79	.77	.60	.64	.39	.35	.39
502 St.H.	.74	.69	.56	.43	.38	.33	.19
503 T.H.	.83	.77	.62	.43	.52	.35	.39
504 T.H.	.83	.77	.62	.45	.52	.35	.39
505 St.H.	.72	.67	.56	.45	.38	.30	.17
506 T.H.	.81	.77	.62	.45	.52	.35	.39
507 T.H.	.79	.75	.62	.45	.52	.35	.39
508 St.H.	.72	.67	.56	.45	.38	.30	.17
509 T.H.	.81	.75	.62	.45	.52	.35	.39
510 T.H.	.79	.79	.62	.43	.39	.33	.39
511 St.H.	.72	.67	.58	.45	.38	.30	.19
512 T.H.	.87	.81	.65	.45	.52	.35	.39
513	- - -	- - -	- - -	- - -	- - -	- - -	- - -
514 St.H.	.72	.67	.56	.43	.38	.30	.17
515 T.H.	.70	.83	.67	.45	.52	.35	.39
516 T.H.	.70	.83	.67	.45	.52	.35	.39
517 St.H.	.89	.67	.56	.43	.38	.30	.17
518	- - -	- - -	- - -	- - -	- - -	- - -	- - -
519 T.H.	.72	.83	.67	.45	.52	.35	.39
520 St.H.	.74	.67	.56	.45	.38	.30	.17
521 T.H.	.79	.77	.60	.43	.39	.33	.39
522 St.H.	.72	.67	.56	.45	.38	.33	.17
523 T.H.	.72	.71	.58	.40	.37	.30	.37

[a]Total-head tube (coefficient given as P_t).

[b]Static-head tube (coefficient given as P_s).

TABLE 23.– PRESSURE COEFFICIENTS FOR THE FLYING MOCK-UP OF THE XP-92 AIRPLANE, $\beta = 0.13^{\circ}$, $\delta_e = -10^{\circ}$, $\delta_a = \mp 10^{\circ}$, $\delta_r = 0^{\circ}$

(a) Wing

Orifice No. \ α	3.99	8.15	16.50	24.85	26.91	28.95	33.00
101	0	0.13	0.35	0.56	0.60	0.64	0.68
102	-.13	-.23	-.52	-.85	-.96	-1.23	-1.76
103	- - -	- - -	- - -	- - -	- - -	- - -	- - -
104	- - -	- - -	- - -	- - -	- - -	- - -	- - -
105	.06	.19	.35	.42	.43	.43	.47
106	-.21	-.40	-1.04	-3.85	-3.32	-2.94	-1.95
107	.15	.32	.07	-.19	-.21	-.21	-.18
108	-.32	-.74	-2.72	-3.23	-2.79	-2.53	-1.79
109	-.04	.04	.24	.42	.43	.47	.53
110	-.06	-.21	-.39	-.65	-.79	-.83	-.87
111	-.04	.09	.30	.46	.49	.53	.55
112	-.21	-.32	-.57	-1.50	-1.81	-1.83	-1.55
113	.02	.15	.33	.42	.43	.45	.45
114	-.26	-.49	-2.35	-2.19	-1.96	-1.79	-1.39
115	.13	.23	.18	.11	.06	.06	.08
116	-.36	-.81	-2.59	-1.81	-1.66	-1.53	-1.18
117	-.17	-.09	.09	.23	.28	.32	.34
118	-.17	-.21	-.33	-.61	-.64	-.64	-.76
119	-.13	-.04	.16	.31	.34	.38	.42
120	-.19	-.26	-.44	-.69	-.85	-.94	-1.03
121	-.06	-.04	.24	.40	.43	.45	.50
122	-.23	-.32	-.46	-1.54	-1.51	-1.47	-1.26
123	.04	.13	.28	.35	.36	.38	.39
124	-.28	-.49	-2.67	-1.54	-1.45	-1.32	-1.11
125	.06	.19	.26	.23	.21	.21	.18
126	-.38	-.79	-1.96	-1.31	-1.26	-1.15	-1.00
127	-.15	-.09	.04	.15	.17	.19	.21
128	-.19	-.21	-.33	-.56	-.55	-.60	-.76
129	-.11	-.02	.09	.19	.21	.23	.26
130	-.19	-.21	-.37	-.69	-.81	-.85	-.95
131	-.09	0	.16	.25	.28	.30	.32
132	-.23	-.30	-.44	-1.17	-1.17	-1.11	-1.08
133	-.04	.06	.24	.31	.32	.36	.37
134	-.28	-.45	-1.43	-1.08	-1.04	-.98	-.95
135	.04	.19	.30	.31	.30	.30	.26
136	-.23	-.77	-1.00	-.94	-.91	-.85	-.92
137	-.04	-.02	.04	.11	.11	.11	.11
138	-.09	-.09	-.16	-.29	-.34	-.45	-.63
139	-.02	.02	.09	.13	.13	.15	.13
140	-.06	-.09	-.18	-.52	-.64	-.72	-.87

TABLE 23.– CONTINUED

(a) Wing (Concluded)

Orifice No. \ α	3.99	8.15	16.50	24.85	26.91	28.95	33.00
141	–0.04	0	0.09	0.11	0.13	0.13	0.13
142	–.11	–.13	–.28	–.88	–.89	–.91	–.95
143	–.02	.06	.16	.19	.21	.23	.24
144	–.23	–.36	–.89	–.81	–.81	–.79	–.82
145	.02	.13	.20	.23	.23	.23	.21
146	–.32	–.60	–.63	–.73	–.74	–.72	–.79
147	.04	.09	.16	.19	.15	.17	.39
148	–.06	–.06	–.13	–.25	–.30	–.40	–.58
149	~~0~~	~~0~~	~~.07~~	~~.02~~	~~.06~~	~~.06~~	~~.13~~
150	–.06	–.09	–.18	–.56	–.68	–.77	–.92
151	.13	.26	.35	.44	.45	.45	.45
152	–.06	–.15	–.54	–.98	–.98	–.96	–.97
153	–.15	–.15	.63	.65	.64	.62	.66
154	–.32	–.45	–.83	–.79	–.79	–.79	–.84
155	.11	.19	.28	.29	.28	.28	.29
156	–.36	–.53	–.70	–.71	–.70	–.72	–.76
157	0	.02	.09	.13	.13	.11	.08
158	–.04	–.04	–.09	–.21	–.28	–.40	–.55
159	.02	.04	.09	.11	.11	.09	.05
160	–.02	–.04	–.11	–.44	–.57	–.68	–.82
161	0	.02	.04	.02	.02	.02	0
162	–.06	–.11	–.48	–.83	–.85	–.83	–.87
163	–.09	.04	.04	.08	.09	.11	.11
164	–.17	–.26	–.70	–.69	–.68	–.70	–.76
165	–.02	.11	.13	.15	.17	.17	.16
166	–.30	–.36	–.57	–.65	–.64	–.68	–.71
167	.11	.11	.16	.17	.13	.09	–.11
168	.11	.13	.13	.15	.09	0	–.26
169	.09	.11	.09	–.08	–.15	–.21	–.39
170	.11	.11	.07	–.21	–.32	–.43	–.68
171	.11	.11	–.09	–.33	–.36	–.38	–.45
172	.09	.06	–.30	–.65	–.68	–.72	–.79
173	.11	.09	–.18	–.23	–.23	–.26	–.29
174	.06	0	–.48	–.58	–.60	–.64	–.71
175	–.02	–.21	–.22	–.27	–.30	–.32	–.34
176	–.09	–.53	–.38	–.50	–.53	–.60	–.66

Note: A line has been drawn through the pressure coefficients for which the data are doubtful.

TABLE 23.– CONTINUED

(b) Vertical tail.

Orifice No. \ α	3.99	8.15	16.50	24.85	26.91	28.95	33.00
201	0.04	0.02	-0.09	-0.23	-0.28	-0.30	-0.63
202	-.15	-.17	-.23	-.38	-.39	-.39	-.47
203	-.04	-.06	-.17	-.32	-.37	-.41	-.68
204	~~.15~~	~~.15~~	~~.15~~	~~.13~~	~~.11~~	~~.07~~	~~0~~
205	-.04	-.06	-.17	-.32	-.37	-.41	-.71
206	~~.11~~	~~.13~~	~~.19~~	~~.19~~	~~.18~~	~~.16~~	~~.11~~
207	-.04	-.09	-.17	-.34	-.37	-.41	-.66
208	-.13	-.17	-.26	-.40	-.44	-.46	-.63
209	-.04	-.06	-.15	-.32	-.37	-.44	-.63
210	-.17	-.21	-.28	-.40	-.44	-.44	-.58
211	-.06	-.09	-.17	-.36	-.39	-.46	-.66
212	-.19	-.21	-.30	-.45	-.48	-.50	-.66
213	-.09	-.11	-.19	-.40	-.45	-.54	-.76
214	-.19	-.21	-.30	-.47	-.49	-.52	-.76
215	-.04	-.06	-.13	-.32	-.39	-.48	-.66
216	~~-.19~~	~~-.23~~	~~-.32~~	~~-.49~~	~~-.54~~	~~-.57~~	~~-.82~~
217	.02	0	-.09	-.23	-.28	-.37	-.55
218	-.23	-.26	-.28	-.38	-.41	-.41	-.53
219	-.06	-.09	-.15	-.34	-.41	-.52	-.71
220	-.19	-.21	-.28	-.43	-.48	-.52	-.74
221	-.06	-.09	-.17	-.43	-.52	-.65	-.84
222	-.21	-.23	-.32	-.51	-.59	-.65	-.87
223	-.06	-.09	-.17	-.43	-.52	-.63	-.79
224	-.21	-.23	-.32	-.53	-.63	-.67	-.84
225	-.06	-.06	-.11	-.21	-.26	-.33	-.45
226	-.19	-.19	-.21	-.30	-.30	-.35	-.47
227	0	0	-.04	-.17	-.24	-.33	-.47
228	-.06	-.09	-.11	-.21	-.28	-.35	-.50
229	~~.11~~	~~.13~~	~~.17~~	~~.19~~	~~.18~~	~~.16~~	~~.11~~
230	-.04	-.06	-.11	-.23	-.30	-.41	-.61
231	.06	.06	.02	-.17	-.24	-.37	-.50
232	-.06	-.09	-.13	-.30	-.37	-.46	-.63
233	-.04	-.04	-.09	-.15	-.20	-.26	-.39
234	-.21	-.21	-.21	-.28	-.30	-.33	-.42
235	.02	.02	-.02	-.13	-.18	-.24	-.37

Note: Lines have been drawn through the pressure coefficients for which the data are doubtful.

TABLE 23.- CONTINUED

(b) Vertical tail (Concluded)

Orifice No. \ α	3.99	8.15	16.50	24.85	26.91	28.95	33.00
236	-0.15	-0.15	-0.19	-0.28	-0.30	-0.37	-0.50
237	.09	.09	.04	-.13	-.18	-.28	-.45
238	.02	0	-.04	-.17	-.24	-.33	-.53
239	.09	.09	.04	-.13	-.20	-.30	-.42
240	-.04	-.04	-.09	-.23	-.30	-.41	-.55
241	-.06	-.06	-.09	-.17	-.22	-.28	-.39
242	-.17	-.19	-.17	-.23	-.26	-.30	-.39
243	.04	.04	0	-.09	-.13	-.20	-.32
244	-.04	-.04	-.09	-.15	-.20	-.24	-.37
245	.06	.06	.04	-.11	-.18	-.26	-.42
246	.02	.02	0	-.13	-.20	-.28	-.47
247	.11	.09	.09	-.09	-.16	-.24	-.37
248	.02	.02	-.02	-.17	-.24	-.33	-.47
249	-.32	-.32	-.30	-.32	-.35	-.35	-.55
250	-.11	-.11	-.13	-.19	-.22	-.26	-.37
251	.11	.11	.09	-.02	-.07	-.13	-.24
252	.09	.09	.06	-.02	-.07	-.13	-.26
253	.11	.11	.09	-.06	-.11	-.20	-.34
254	.13	.13	.09	-.02	-.09	-.16	-.32
255	.11	.11	.06	-.06	-.16	-.20	-.34
256	.11	.11	.09	-.04	-.11	-.20	-.34

TABLE 23.- CONTINUED

(c) Fuselage

Orifice No. \ α	3.99	3.15	16.50	24.85	26.91	28.95	33.00
301	0.17	0.06	-0.19	-0.83	-0.96	-1.07	-1.21
302	.19	.11	-.17	-.66	-.76	-.93	-1.03
303	.26	.21	0	-.32	-.41	-.50	-.63
304	.36	.40	.43	.40	.39	.39	.34
305	.38	.48	.64	.81	.83	.87	.89
306	.28	.31	.32	.28	.24	.22	.16
307	.32	.27	.06	-.23	-.30	-.39	-.55
308	.21	.11	-.19	-.70	-.89	-1.11	-1.21
309	.09	.02	-.11	-.21	-.24	-.26	-.32
310	.09	0	-.19	-.40	-.46	-.52	-.62
311	.09	.02	-.19	-.55	-.63	-.76	-.95
312	.15	.17	.15	.06	.04	.02	-.03
313	.21	.27	.40	.55	.57	.61	.66
314	.17	.19	.13	0	-.04	-.11	-.21
315	.13	.08	-.09	-.43	-.50	-.63	-.82
316	.11	.04	-.19	-.45	-.50	-.61	-.74
317	0	-.04	-.21	-.45	-.48	-.57	-.63
318	0	-.04	-.26	-.57	-.65	-.76	-.92
319	.04	.04	.02	-.06	-.09	-.11	-.16
320	.06	.13	.23	.40	.44	.50	.55
321	.06	.08	.06	0	-.02	-.04	-.13
322	0	-.02	-.19	-.49	-.57	-.67	-.84
323	-.02	-.06	-.23	-.49	-.54	-.61	-.68
324	-.15	-.19	-.30	-.43	-.46	-.48	-.55
325	-.02	0	.11	.26	.28	.33	.39
326	-.06	-.02	-.09	-.13	-.16	-.20	-.24
327	-.32	-.35	-.45	-.51	-.50	-.50	-.50
328	-.06	-.13	-.36	-.62	-.70	-.78	-.87
329	0	.06	.17	.34	.37	.41	.47
330	0	.04	.02	-.06	-.09	-.11	-.11
331	.09	.04	-.04	-.15	-.18	-.20	-.29
332	-.15	-.21	-.49	-.91	-.89	-.96	-1.16
333	-.17	-.13	.02	.17	.22	.24	.29
334	-.15	-.08	.06	.21	.24	.28	.32
335	-.17	-.21	-.34	-.55	-.63	-.76	-1.00
336	-.11	-.13	-.19	-.45	-.44	-.67	-.84

Note: A line has been drawn through the pressure coefficients for which the data are doubtful.

TABLE 23.- CONTINUED

(c) Fuselage (Concluded)

Orifice No. \ α	3.99	8.15	16.50	24.85	26.91	28.95	33.00
337	-0.19	-0.15	-0.06	0.06	0.09	0.11	0.13
338	-.23	-.17	-.09	.04	.07	.07	.08
339	-.04	-.06	-.13	-.34	-.39	-.54	-.71
340	~~2.60~~	~~2.55~~	~~2.58~~	~~2.55~~	~~2.59~~	~~2.59~~	~~3.00~~
341	-.09	-.06	-.02	.02	.04	.02	.03
342	-.21	-.21	-.15	-.13	-.11	-.11	-.13
343	.15	.13	.09	.02	-.04	-.20	-.45
344	.11	.11	.02	-.13	.20	-.33	-.50
345	-.02	.02	.04	.09	.09	.07	.03
346	-.02	0	.04	.09	.09	.07	.03
347	-.04	-.04	-.02	.02	.02	.02	0
348	-.19	-.19	-.19	-.17	-.18	-.22	-.24
349	-.23	-.23	-.23	-.23	-.24	-.26	-.32
350	.06	.06	.04	-.02	-.04	-.09	-.21
351	.04	.06	.04	-.04	-.07	-.13	-.24
352	.11	.11	.11	.11	.09	.02	-.11
353	-.09	-.06	-.09	-.13	-.13	-.18	-.21
354	-.11	-.13	-.15	-.19	-.22	-.26	-.37
355	0	0	-.02	-.02	-.04	-.07	-.18
356	.04	.06	.02	-.04	-.11	-.16	-.21
357	.09	.08	.04	-.04	-.07	-.13	-.24
358	~~.36~~	~~.35~~	~~.30~~	~~.21~~	~~.20~~	~~.16~~	~~.05~~
359	.06	.06	.02	-.04	-.07	-.09	-.16
360	-.02	-.04	-.06	-.09	-.09	-.13	-.26
361	-.23	-.27	-.32	-.34	-.35	-.37	-.42
362	-.15	-.21	-.26	-.30	-.35	-.37	-.45
363	-.02	-.02	-.06	-.11	-.13	-.16	-.21
364	0	0	-.02	-.06	-.09	-.13	-.21
365	.09	.08	.04	.02	.02	-.02	-.11
366	-.09	-.15	-.38	-.87	-1.02	-1.15	-1.35
367	-.02	.04	.19	.34	.37	.39	.45
368	-.02	.04	.17	.34	.39	.41	.47
369	.11	.15	.17	.21	.22	.22	.18
370	.11	.15	.17	.21	.22	.22	.18
371	.13	.15	.17	.17	.18	.16	.08
372	.13	.15	.17	.17	.18	.16	.08

Note: Lines have been drawn through the pressure coefficients for which the data are doubtful.

TABLE 23.- CONCLUDED

(d) Fuselage-duct rakes

Tube No. \ α	3.99	8.15	16.50	24.85	26.91	28.95	33.00
401 T.H.[a]	1.00	1.00	0.96	0.89	0.82	0.78	0.71
402 St.H.[b]	.06	0	0	.04	.02	-.02	-.11
403 T.H.	1.00	1.00	.96	.89	.84	.80	.75
404	- - -	- - -	- - -	- - -	- - -	- - -	- - -
405 St.H.	.13	.09	.02	.04	.02	-.02	-.13
406 T.H.	.98	1.00	.96	.85	.80	.76	.69
407 T.H.	.98	1.00	.96	.85	.78	.74	.69
408 St.H.	.17	.13	.11	.13	.06	-.02	-.11
409 T.H.	1.00	1.00	.96	.87	.82	.78	.73
410 T.H.	1.00	1.00	.98	.92	.89	.84	.79
411 St.H.	.13	.09	.08	.02	-.04	-.11	-.17
412 T.H.	1.00	1.00	.96	.85	.78	.72	.67
413 T.H.	1.00	1.00	.96	.89	.87	.84	.77
414 St.H.	.02	-.04	-.08	-.31	-.44	-.48	-.63
415 T.H.	1.00	1.00	.92	.71	.63	.54	.50
416 T.H.	1.00	1.00	.92	.73	.07	.07	.23
417 St.H.	-.19	-.21	-.23	-.42	-.48	-.57	-.42
418 T.H.	.96	.91	.67	.48	.30	-.02	-.13
501 T.H.	.79	.79	.60	.46	.39	.33	.37
502 St.H.	.72	.70	.56	.42	.37	.33	.17
503 T.H.	.81	.79	.60	.46	.39	.35	.37
504 T.H.	.81	.79	.60	.46	.39	.35	.37
505 St.H.	.72	.70	.56	.42	.37	.30	.17
506 T.H.	.81	.79	.60	.46	.39	.35	.39
507 T.H.	.79	.77	.60	.46	.41	.35	.39
508 St.H.	.70	.70	.56	.42	.37	.30	.17
509 T.H.	.81	.77	.60	.46	.41	.35	.39
510 T.H.	.83	.81	.60	.46	.39	.33	.39
511 St.H.	.77	.70	.56	.42	.37	.30	.17
512 T.H.	.85	.83	.62	.46	.31	.35	.37
513	- - -	- - -	- - -	- - -	- - -	- - -	- - -
514 St.H.	.72	.70	.56	.42	.37	.30	.17
515 T.H.	.91	.85	.65	.46	.31	.35	.37
516 T.H.	.89	.85	.67	.46	.31	.35	.39
517 St.H.	.72	.70	.56	.42	.37	.30	.17
518	- - -	- - -	- - -	- - -	- - -	- - -	- - -
519 T.H.	.87	.83	.65	.46	.31	.35	.39
520 St.H.	.72	.70	.56	.42	.37	.30	.17
521 T.H.	.83	.74	.60	.46	.39	.33	.37
522 St.H.	.72	.70	.56	.42	.37	.30	.17
523 T.H.	.72	.70	.56	.42	.37	.30	.37

[a]Total-head tube (coefficient given as P_t).

[b]Static-head tube (coefficient given as P_s).

TABLE 24.– PRESSURE COEFFICIENTS FOR THE FLYING MOCK-UP OF THE XP-92 AIRPLANE, $\beta = 0.13^{\circ}$, $\delta_e = -20^{\circ}$, $\delta_a = \pm 10^{\circ}$, $\delta_r = 0^{\circ}$

(a) Wing

Orifice No. \ α	3.86	8.02	16.34	24.65	26.74	28.77	32.86
101	-0.02	0.09	0.33	0.53	0.57	0.62	0.66
102	-.09	-.17	-.42	-.85	-1.02	-1.38	-1.68
103	---	---	---	---	---	---	---
104	---	---	---	---	---	---	---
105	.04	.17	.33	.42	.43	.45	.45
106	-.13	-.32	-.85	-2.49	-2.31	-2.04	-1.74
107	.13	.23	.11	.04	-.06	-.09	-.16
108	-.23	-.60	-1.94	-2.17	-2.02	-1.83	-1.11
109	-.09	0	.21	.34	.39	.43	.45
110	-.06	-.13	-.27	-.60	-.73	-.70	-.87
111	-.06	.04	.25	.38	.43	.47	.50
112	-.11	-.21	-.44	-1.32	-1.47	-1.40	-1.42
113	0	.11	.31	.38	.39	.43	.42
114	-.15	-.34	-1.11	-1.32	-1.39	-1.28	-1.29
115	.09	.21	.21	.17	.14	.15	.08
116	-.21	-.57	-2.34	-1.15	-1.20	-1.11	-1.11
117	-.23	-.15	.02	.13	.16	.21	.26
118	-.02	-.06	-.15	-.51	-.47	-.51	-.74
119	-.19	-.11	.06	.19	.24	.30	.34
120	-.04	-.11	-.23	-.62	-.69	-.77	-.97
121	-.13	-.02	.17	.30	.33	.36	.39
122	-.06	-.15	-.31	-1.02	-1.12	-1.09	-1.18
123	-.02	.09	.25	.30	.31	.32	.32
124	-.11	-.28	-1.61	-.94	-.98	-.94	-1.03
125	0	.15	.27	.23	.22	.23	.16
126	-.15	-.47	-1.38	-.83	-.84	-.81	-.96
127	-.28	-.23	-.11	-.06	-.04	-.02	.03
128	.09	.06	-.02	-.36	-.37	-.49	-.68
129	-.26	-.19	-.08	-.02	0	.02	.05
130	.11	.06	-.06	-.53	-.59	-.70	-.89
131	-.23	-.15	0	.02	.04	.06	.11
132	.09	.02	-.23	-.74	-.80	-.83	-.97
133	-.19	-.06	.11	.13	.16	.17	.21
134	.04	-.09	-.67	-.66	-.65	-.70	-.84
135	-.11	.06	.23	.21	.22	.21	.21
136	.02	-.26	-.52	-.60	-.57	-.64	-.82
137	-.53	-.49	-.52	-.60	-.57	-.60	-.55
138	.40	.40	.38	.19	.14	-.04	-.34

TABLE 24.– CONTINUED

(a) Wing (Concluded)

Orifice No. \ α	3.86	8.02	16.34	24.65	26.74	28.77	32.86
139	-0.36	-0.32	-0.31	-0.53	-0.53	-0.55	-0.55
140	.47	.43	.38	-.13	-.27	-.43	-.68
141	-.36	-.30	-.27	-.62	-.65	-.68	-.68
142	.49	.45	.21	-.51	-.55	-.64	-.84
143	-.26	-.23	-.23	-.38	-.39	-.43	-.42
144	.47	.40	-.29	-.49	-.49	-.57	-.84
145	-.45	-.32	-.19	-.19	-.20	-.19	-.16
146	.47	.36	-.21	-.43	-.43	-.53	-.66
147	-1.38	-1.43	-1.81	-2.23	-2.27	-2.34	-2.24
148	.19	.19	.13	.04	.02	-.02	-.11
149	~~-.26~~	~~-.21~~	~~-.29~~	~~-.70~~	~~-.30~~	~~-.87~~	~~-1.00~~
150	-.15	-.15	-.25	-.81	-.86	-.91	-1.00
151	-.64	-.55	-.69	-2.13	-2.37	-2.53	-2.66
152	-.23	-.21	-.38	-.68	-.71	-.77	-.58
153	-1.17	-1.43	-1.50	-2.15	-2.20	-2.21	-2.21
154	-.32	-.26	-.38	-.60	-.61	-.68	-.76
155	-.81	-.70	-.79	-.94	-.98	-.98	-.95
156	.66	.47	.31	-.38	-.39	-.49	-.61
157	-.53	-.57	-.63	-.70	-.71	-.74	-.74
158	.45	.40	.46	.34	.35	.13	-.16
159	-.51	-.47	-.63	-1.00	-.92	-.89	-.87
160	.49	.47	.38	-.13	-.27	-.45	-.68
161	-.45	-.40	-.48	-.94	-.92	-.91	-.89
162	.47	.45	0	-.49	-.53	-.62	-.79
163	-.68	-.57	-.52	-.77	-.78	-.77	-.74
164	.43	.38	-.11	-.36	-.39	-.51	-.63
165	-.91	-.62	-.46	-.51	-.51	-.51	-.50
166	.40	.32	.02	-.34	-.37	-.47	-.58
167	-.32	-.32	-.17	0	0	-.09	-.21
168	.06	.04	.15	.23	.22	.04	-.08
169	-.45	-.43	-.46	-.19	-.27	-.38	-.61
170	-.11	-.11	-.08	-.19	-.29	-.43	-.68
171	-.43	-.43	-.38	-.38	-.41	-.49	-.61
172	-.13	-.15	-.23	-.38	-.45	-.55	-.71
173	-.34	-.11	-.06	-.19	-.22	-.28	-.37
174	-.04	.06	-.02	-.23	-.29	-.38	-.50
175	-.79	-.74	-.08	-.23	-.27	-.34	-.42
176	-.04	-.06	.06	-.13	-.18	-.28	-.45

Note: A line has been drawn through the pressure coefficients for which the data are doubtful.

TABLE 24.- CONTINUED

(b) Vertical tail

Orifice No. \ α	3.86	8.02	16.34	24.65	26.74	28.77	32.86
201	-0.04	-0.07	-0.15	-0.35	-0.35	-0.36	-0.61
202	.02	-.02	-.09	-.18	-.22	-.26	-.47
203	-.09	-.13	-.21	-.37	-.39	-.43	-.68
204	.16	.16	.15	.11	.09	.06	-.03
205	-.07	-.11	-.17	-.35	-.37	-.40	-.71
206	.09	.11	.17	.16	.16	.13	.08
207	-.07	-.11	-.19	-.35	-.37	-.38	-.68
208	-.04	-.07	-.15	-.30	-.33	-.36	-.63
209	-.16	-.16	-.26	-.41	-.45	-.47	-.66
210	.02	-.02	-.09	-.22	-.24	-.30	-.50
211	-.13	-.16	-.21	-.38	-.43	-.47	-.71
212	-.04	-.07	-.13	-.28	-.31	-.38	-.63
213	-.13	-.16	-.23	-.41	-.47	-.51	-.76
214	-.04	-.07	-.13	-.30	-.35	-.43	-.71
215	-.09	-.11	-.17	-.35	-.39	-.45	-.68
216	-.07	-.09	-.15	-.35	-.37	-.47	-.76
217	-.18	-.18	-.23	-.37	-.39	-.43	-.58
218	.04	0	-.04	-.16	-.19	-.26	-.42
219	-.13	-.16	-.19	-.37	-.43	-.49	-.71
220	-.02	-.04	-.09	-.26	-.31	-.40	-.63
221	-.16	-.18	-.23	-.46	-.49	-.60	-.84
222	-.04	-.04	-.15	-.35	-.39	-.51	-.79
223	-.13	-.16	-.23	-.44	-.49	-.60	-.79
224	-.02	-.04	-.11	-.37	-.43	-.55	-.74
225	-.16	-.16	-.17	-.28	-.29	-.34	-.45
226	-.02	-.04	-.04	-.13	-.16	-.21	-.34
227	-.02	-.02	-.06	-.18	-.20	-.30	-.45
228	.02	.02	0	-.11	-.16	-.47	-.39

Note: Lines have been drawn through the pressure coefficients for which the data are doubtful.

TABLE 24.– CONTINUED

(b) Vertical tail (Concluded)

Orifice No. \ α	3.86	8.02	16.34	24.65	26.74	28.77	32.86
229	~~0.09~~	~~0.13~~	~~0.17~~	~~0.18~~	~~0.16~~	~~0.13~~	~~0.08~~
230	.07	.04	.04	-.13	-.18	-.30	-.47
231	0	0	-.02	-.18	-.22	-.34	-.50
232	.09	.09	.09	-.11	-.14	-.28	-.42
233	-.16	-.16	-.15	-.24	-.27	-.30	-.39
234	-.04	-.04	-.04	-.11	-.14	-.19	-.32
235	-.02	-.02	-.04	-.15	-.16	-.23	-.37
236	-.04	-.07	-.09	-.15	-.20	-.28	-.39
237	.04	.04	.02	-.11	-.14	-.26	-.42
238	.11	.09	.09	-.04	-.10	-.21	-.37
239	.04	.04	.02	-.13	-.16	-.28	-.39
240	.09	.09	.09	-.06	-.10	-.21	-.37
241	-.16	-.13	-.15	-.22	-.24	-.28	-.37
242	-.04	-.04	-.04	-.11	-.14	-.19	-.29
243	.02	.02	0	-.09	-.12	-.17	-.29
244	.02	0	-.02	-.11	-.12	-.17	-.29
245	.07	.07	.02	-.09	-.12	-.02	-.39
246	.11	.11	.09	-.04	-.08	-.19	-.34
247	.07	.07	.04	-.09	-.12	-.21	-.34
248	.13	.11	.11	-.02	-.06	-.15	-.32
249	-.36	-.34	-.34	-.35	-.33	-.34	-.55
250	-.04	-.07	-.09	-.13	-.16	-.19	-.29
251	.13	.11	.11	.02	-.02	-.06	-.21
252	.13	.13	.11	.02	0	-.06	-.21
253	.11	.11	.09	-.02	-.04	-.13	-.29
254	.15	.16	.13	.04	0	-.09	-.24
255	.11	.11	.11	0	-.04	-.13	-.26
256	.15	.16	.15	.04	.02	-.09	-.21

Note: A line has been drawn through the pressure coefficients for which the data are doubtful.

TABLE 24.– CONTINUED

(c) Fuselage

Orifice No. \ α	3.86	8.02	16.34	24.65	26.74	28.77	32.86
301	0.16	0.07	-0.17	-0.78	-0.94	-1.00	-1.11
302	.20	.11	-.15	-.59	.73	-.85	-1.05
303	.26	.20	.02	-.30	-.38	-.46	-.63
304	.35	.39	.43	.44	.42	.40	.34
305	.16	.46	.62	.78	.83	.83	.89
306	~~.26~~	~~.30~~	~~.32~~	~~.30~~	~~.23~~	~~.21~~	~~.16~~
307	.28	.24	.09	-.22	-.31	-.38	-.58
308	.20	.09	-.15	-.70	-.96	-1.11	-1.21
309	.07	0	-.11	-.20	-.23	-.23	-.32
310	.07	0	-.15	-.39	-.46	-.51	-.63
311	.07	.02	-.17	-.50	-.63	-.72	-.95
312	.16	.16	.15	.11	.06	.04	-.03
313	.20	.24	.38	.52	.58	.60	.63
314	.16	.16	.13	-.02	-.06	-.11	-.24
315	.11	.07	-.09	-.41	-.52	-.62	-.84
316	.09	.02	-.15	-.41	-.50	-.57	-.74
317	0	-.07	-.21	-.44	-.50	-.53	-.66
318	-.02	-.07	-.23	-.54	-.65	-.72	-.92
319	.02	.04	.02	-.04	-.06	-.09	-.16
320	.04	.11	.23	.39	.46	.49	.55
321	.02	.07	.06	-.02	-.02	-.04	-.13
322	-.02	-.04	-.17	-.48	-.56	-.66	-.84
323	-.04	-.09	-.23	-.46	-.52	-.57	-.66
324	-.18	-.20	-.28	-.39	-.44	-.45	-.55
325	-.07	-.02	.11	.24	.29	.34	.39
326	-.09	-.07	-.06	-.13	-.15	-.17	-.24
327	-.35	-.37	-.45	-.48	-.50	-.49	-.50
328	-.07	-.16	-.32	-.59	-.65	-.70	-.84
329	-.04	.04	.17	.33	.38	.40	.47
330	-.04	0	0	-.07	-.08	-.11	-.13
331	.07	.04	-.02	-.13	-.15	-.15	-.32
332	-.04	-.09	-.26	-.83	-.81	-.81	-1.11
333	-.26	-.20	-.04	.11	.17	.19	.26
334	-.20	-.11	.04	.20	.25	.28	.32
335	.04	0	-.15	-.37	-.50	-.64	-.89
336	.16	.16	.11	-.09	-.19	-.34	-.55

Note: A line has been drawn through the pressure coefficients for which the data are doubtful.

TABLE 24.– CONTINUED

(c) Fuselage (Concluded)

Orifice No. \ α	3.86	8.02	16.34	24.65	26.74	28.77	32.86
337	−0.26	−0.22	−0.13	−0.02	0.02	0.04	0.08
338	−.24	−.20	−.09	.02	.08	.09	.13
339	.11	.11	.11	0	−.06	−.17	−.39
340	~~2.61~~	~~2.81~~	~~2.55~~	~~.41~~	~~2.50~~	~~2.25~~	~~3.00~~
341	−.20	−.16	−.11	−.07	−.04	−.04	−.03
342	−.20	−.16	−.11	−.04	−.02	−.02	−.03
343	.02	−.02	−.09	−.18	−.17	−.29	−.47
344	.02	0	−.02	−.18	−.23	−.36	−.53
345	−.37	−.37	−.45	−.48	−.46	−.47	−.42
346	−.28	−.28	−.30	−.35	−.35	−.36	−.34
347	−.13	−.13	−.09	−.07	−.04	−.04	−.03
348	−.16	−.13	−.09	−.04	−.02	−.04	−.05
349	−.18	−.16	−.11	−.09	−.06	−.08	−.11
350	.02	.04	.02	−.02	−.06	−.11	−.16
351	−.04	−.04	−.06	−.04	−.06	−.09	−.11
352	−.16	−.18	−.23	−.26	−.29	−.32	−.32
353	.04	.07	.11	.16	.17	.15	.11
354	.02	.02	.02	.04	.04	0	−.05
355	0	0	.02	.02	.02	−.02	−.08
356	.07	.07	.06	.02	.02	−.02	−.11
357	.09	.09	.06	.02	0	−.06	−.13
358	~~.35~~	~~.35~~	~~.28~~	~~.20~~	~~.17~~	~~.13~~	~~.05~~
359	−.02	−.04	−.06	−.09	−.08	−.11	−.11
360	−.18	−.22	−.23	−.20	−.21	−.23	−.24
361	−.26	−.30	−.30	−.30	−.29	−.32	−.34
362	−.09	−.07	−.09	−.11	−.15	−.21	−.32
363	−.02	−.02	−.02	−.02	−.02	−.06	−.13
364	.04	.04	.02	−.02	−.02	−.04	−.08
365	.07	.07	.04	.07	.04	.02	−.03
366	−.04	−.09	−.26	−.63	−.88	−.98	−1.29
367	−.07	0	.17	.33	.38	.40	.47
368	−.07	0	.15	.33	.38	.40	.47
369	.07	.11	.17	.20	.21	.19	.18
370	.07	.11	.17	.20	.21	.19	.18
371	.07	.11	.15	.13	.13	.09	.03
372	.07	.11	.15	.13	.13	.09	.03

Note: Lines have been drawn through the pressure coefficients for which the data are doubtful.

TABLE 24.– CONCLUDED

(d) Fuselage-duct rakes

Tube No. \ α	3.86	8.02	16.34	24.65	26.74	28.77	32.86
401 T.H.[a]	1.00	0.98	0.96	0.89	0.87	0.79	0.63
402 St.H.[b]	.02	0	-.02	0	0	-.02	-.11
403 T.H.	1.00	.98	.96	.89	.87	.81	.68
404	- - -	- - -	- - -	- - -	- - -	- - -	- - -
405 St.H.	.13	.11	0	0	.02	-.02	-.03
406 T.H.	1.00	.98	.96	.87	.77	.77	.61
407 T.H.	1.00	.98	.96	.84	.75	.77	.61
408 St.H.	.17	.13	.08	.09	.06	0	-.08
409 T.H.	1.00	.98	.96	.87	.79	.77	.66
410 T.H.	1.00	.98	.96	.93	.85	.85	.74
411 St.H.	.13	.09	.06	0	-.04	-.11	-.16
412 T.H.	1.00	.98	.96	.84	.75	.72	.58
413 T.H.	1.00	.98	.96	.89	.83	.87	.74
414 St.H.	.02	-.06	-.11	-.37	-.44	-.49	-.79
415 T.H.	1.00	.98	.92	.72	.60	.55	.39
416 T.H.	1.00	.96	.92	.74	-.06	.09	.03
417 St.H.	-.17	-.23	-.23	-.46	-.56	-.32	-.47
418 T.H.	.98	.91	.69	.46	.27	0	-.37
501 T.H.	.80	.77	.60	.43	.35	.34	.21
502 St.H.	.72	.70	.56	.41	.38	.32	.21
503 T.H.	.80	.79	.60	.43	.35	.34	.24
504 T.H.	.82	.79	.60	.46	.35	.36	.24
505 St.H.	.72	.70	.56	.41	.38	.34	.24
506 T.H.	.82	.79	.60	.46	.37	.34	.24
507 T.H.	.78	.77	.60	.46	.37	.34	.24
508 St.H.	.72	.70	.56	.41	.38	.30	.24
509 T.H.	.82	.74	.60	.46	.37	.34	.24
510 T.H.	.84	.81	.60	.46	.33	.34	.21
511 St.H.	.72	.70	.58	.41	.38	.32	.24
512 T.H.	.87	.83	.65	.46	.35	.34	.29
513	- - -	- - -	- - -	- - -	- - -	- - -	- - -
514 St.H.	.72	.70	.58	.41	.38	.32	.24
515 T.H.	.93	.85	.67	.46	.37	.36	.29
516 T.H.	.91	.83	.67	.46	.37	.36	.29
517 St.H.	.72	.70	.56	.41	.38	.30	.21
518	- - -	- - -	- - -	- - -	- - -	- - -	- - -
519 T.H.	.89	.83	.67	.46	.37	.34	.29
520 St.H.	.72	.70	.56	.41	.38	.32	.24
521 T.H.	.80	.77	.60	.46	.33	.34	.29
522 St.H.	.72	.70	.56	.41	.38	.36	.24
523 T.H.	.72	.70	.54	.46	.33	.30	.21

[a]Total-head tube (coefficient given as P_t).

[b]Static-head tube (coefficient given as P_s).

TABLE 25.– PRESSURE COEFFICIENTS FOR THE FLYING MOCK-UP OF THE XP-92 AIRPLANE, $\beta = 0.13^{\circ}$, $\delta_e = -20^{\circ}$, $\delta_a = \mp 10^{\circ}$, $\delta_r = 0^{\circ}$

(a) Wing

Orifice No. \ α	3.86	8.02	16.34	24.65	26.71	28.77	32.86
101	0	0.11	0.33	0.55	0.61	0.62	0.68
102	-.10	-.21	-.46	-.81	-.91	-1.19	-1.84
103	- -	- -	- -	- -	- -	- -	- -
104	- -	- -	- -	- -	- -	- -	- -
105	.04	.19	.33	.40	.44	.43	.43
106	-.18	-.38	-.92	-3.49	-3.28	-2.89	-2.00
107	.14	.23	.08	-.15	-.20	-.21	-.22
108	-.27	-.67	-2.31	-2.96	-2.74	-2.47	-1.86
109	-.06	.02	.21	.38	.44	.43	.49
110	-.12	-.19	-.33	-.57	-.74	.79	-.86
111	-.04	.06	.25	.43	.48	.49	.51
112	-.16	-.27	-.50	-1.38	-1.76	-1.77	-1.54
113	0	.15	.31	.40	.44	.43	.43
114	-.22	-.42	-1.77	-1.89	-1.91	-1.72	-1.11
115	.10	.21	.19	.13	.09	.09	.05
116	-.31	-.71	-2.38	-1.60	-1.63	-1.47	-1.19
117	-.20	-.13	.04	.19	.24	.26	.30
118	-.12	-.15	-.25	-.53	-.57	-.60	-.78
119	-.16	-.08	.11	.26	.33	.32	.38
120	-.14	-.19	-.33	-.62	-.76	-.87	-1.03
121	-.10	0	.21	.36	.39	.40	.43
122	-.16	-.25	-.38	-1.32	-1.48	-1.38	-1.27
123	0	.11	.27	.32	.35	.36	.35
124	-.20	-.38	-2.21	-1.30	-1.37	-1.26	-1.14
125	.04	.17	.27	.23	.22	.21	.16
126	-.27	-.63	-1.67	-1.11	-1.17	-1.06	-1.00
127	-.22	-.17	.04	.06	.11	.09	.14
128	-.08	-.11	-.21	-.45	-.44	-.55	-.76
129	-.20	-.15	0	.11	.16	.15	.16
130	-.06	-.11	-.23	-.57	-.70	-.79	-.95
131	-.18	-.11	.04	.17	.22	.21	.22
132	-.10	-.17	-.33	-1.00	-1.09	-1.02	-1.05
133	-.14	0	.17	.26	.28	.30	.30
134	-.14	-.29	-1.06	-.89	-.96	-.89	-.95
135	-.04	.13	.27	.28	.28	.28	.24
136	-.22	-.52	-.83	-.77	-.83	-.79	-.89
137	-.27	-.23	-.19	-.11	-.09	-.13	-.14
138	.12	.11	.06	-.04	-.07	-.23	-.51

TABLE 25.– CONTINUED

(a) Wing (Concluded)

Orifice No. \ α	3.86	8.02	16.34	24.65	26.74	28.77	32.86
139	-0.27	-0.21	-0.15	-0.11	-0.07	-0.11	-0.11
140	.16	.15	.06	-.30	-.44	-.57	-.81
141	-.31	-.25	-.17	-.13	-.11	-.13	-.14
142	.16	.13	-.04	-.72	-.78	-.81	-.92
143	-.22	-.15	-.08	-.02	.02	.02	.02
144	.04	-.04	-.58	-.66	-.70	-.74	-.81
145	-.20	-.08	0	.06	.11	.09	.08
146	.02	-.21	-.44	-.57	-.61	-.70	-.78
147	-.45	-.44	-.42	-.36	-.33	-.36	-.41
148	.24	.25	.23	.11	.09	0	-.50
149	-.16	-.15	-.19	-.28	-.28	-.34	-.41
150	-.04	-.02	-.11	-.36	-.39	-.49	-.73
151	-.78	-.69	-.58	-.49	-.44	-.47	-.46
152	.41	.33	-.04	-.64	-.72	-.77	-.92
153	-.80	-.67	-.54	-.47	-.39	-.38	-.27
154	.22	.04	-.46	-.57	-.61	-.70	-.78
155	-.31	-.11	.04	-.17	-.13	-.17	-.11
156	.06	-.21	-.38	-.53	-.57	-.68	-.84
157	-.20	-.19	-.15	-.11	-.09	-.13	-.19
158	.14	.13	.11	.06	.04	-.13	-.41
159	-.20	-.19	-.15	-.13	-.13	-.17	-.22
160	.18	.17	.11	-.26	-.39	-.55	-.76
161	-.22	-.19	-.17	-.21	-.20	-.23	-.24
162	.14	.11	-.25	-.70	-.74	-.77	-.86
163	-.29	-.21	-.17	-.15	-.11	-.15	-.10
164	.10	0	-.40	-.53	-.57	-.64	-.73
165	-.33	-.15	-.08	-.02	.02	-.02	-.03
166	.02	-.15	-.33	-.49	-.50	-.62	-.70
167	.06	.08	.11	.13	.11	.04	-.14
168	.14	.15	.17	.19	.16	.13	-.19
169	.06	.08	.08	-.11	-.13	-.26	-.49
170	.12	.13	.11	-.15	-.24	-.38	-.68
171	.04	.06	-.06	-.32	-.37	-.43	-.51
172	.10	.11	-.19	-.51	-.59	-.66	-.78
173	.10	.08	-.06	-.21	-.22	-.30	-.35
174	.10	.06	-.21	-.40	-.44	-.55	-.65
175	-.06	-.02	-.11	-.23	-.26	-.34	-.38
176	.08	.04	-.13	-.31	-.37	-.49	-.57

Note: A line has been drawn through the pressure coefficients for which the data are doubtful.

TABLE 25.– CONTINUED

(b) Vertical tail

Orifice No. \ α	3.86	8.02	16.34	24.65	26.74	28.77	32.86
201	0.06	0.04	-0.06	-0.16	-0.18	-0.23	-0.65
202	–.11	–.13	–.21	–.35	–.41	–.38	–.38
203	–.02	–.04	–.13	–.26	–.26	–.32	–.70
204	.15	.15	.15	.09	.09	.04	0
205	–.02	–.04	–.13	–.26	–.28	–.34	–.70
206	.08	.13	.17	.18	.16	.13	.08
207	–.02	–.04	–.13	–.26	–.28	–.34	–.65
208	–.11	–.13	–.21	–.37	–.41	–.40	–.54
209	0	–.02	–.11	–.26	–.26	–.34	–.59
210	–.13	–.15	–.21	–.37	–.44	–.45	–.51
211	–.02	–.04	–.13	–.28	–.30	–.38	–.62
212	–.15	–.17	–.23	–.39	–.44	–.47	–.65
213	–.04	–.06	–.15	–.35	–.37	–.47	–.73
214	–.13	–.15	–.23	–.39	–.46	–.49	–.73
215	0	–.02	–.08	–.26	–.28	–.40	–.65
216	–.15	–.17	–.25	–.41	–.48	–.53	–.78
217	.04	.02	–.04	–.18	–.20	–.06	–.49
218	–.17	–.17	–.21	–.33	–.39	–.40	–.49
219	–.02	–.04	–.11	–.28	–.33	–.45	–.65
220	–.15	–.15	–.19	–.37	–.41	–.49	–.70
221	–.02	–.04	–.11	–.35	–.44	–.57	–.78
222	–.15	–.17	–.23	–.44	–.50	–.57	–.84
223	–.02	–.04	–.11	–.35	–.44	–.57	–.70
224	–.15	–.17	–.23	–.46	–.52	–.62	–.81
225	–.06	–.04	–.08	–.18	–.20	–.26	–.65
226	–.15	–.15	–.17	–.24	–.28	–.32	–.70
227	.02	.02	–.02	–.13	–.18	–.26	–.68
228	–.02	–.02	–.06	–.18	–.22	–.30	–.73

Note: Lines have been drawn through the pressure coefficients for which the data are doubtful.

TABLE 25.– CONTINUED

(b) Vertical tail (Concluded)

Orifice No. \ α	3.86	8.02	16.34	24.65	26.74	28.77	32.86
229	~~0.11~~	~~0.13~~	~~0.17~~	~~0.18~~	~~0.16~~	~~0.13~~	~~0.08~~
230	0	0	–.04	–.18	–.24	–.34	–.54
231	.11	.09	.06	–.09	–.18	–.28	–.41
232	0	0	–.04	–.20	–.24	–.36	–.51
233	–.02	–.02	–.04	–.11	–.13	–.19	–.32
234	–.17	–.17	–.17	–.22	–.26	–.30	–.38
235	.02	.02	0	–.09	–.13	–.19	–.32
236	–.11	–.11	–.15	–.22	–.26	–.32	–.46
237	.11	.09	.06	–.04	–.13	–.21	–.38
238	.04	.04	.02	–.11	–.16	–.26	–.46
239	.13	.11	.08	–.02	–.11	–.21	–.32
240	.02	.02	–.02	–.16	–.20	–.30	–.49
241	–.06	–.04	–.06	–.13	–.16	–.21	–.32
242	–.13	–.13	–.13	–.20	–.22	–.26	–.35
243	.06	.04	.02	–.04	–.09	–.15	–.27
244	0	–.02	–.04	–.11	–.16	–.19	–.32
245	.08	.09	06	–.04	–.11	–.21	–.35
246	.06	.06	.04	–.09	–.13	–.21	–.41
247	.13	.11	.11	0	–.09	– 17	–.30
248	.06	.06	.04	–.09	–.13	–.23	–.38
249	–.33	–.34	–.36	–.39	–.41	–.49	–.65
250	–.08	–.09	–.09	–.16	–.18	–.21	–.32
251	.13	.13	.11	.02	–.02	–.06	–.19
252	.13	.11	.11	.02	–.02	–.09	–.22
253	.13	.11	.11	0	–.07	–.13	–.27
254	.15	.15	.13	.02	–.02	–.19	–.24
255	.13	.11	.11	.02	–.04	–.13	–.24
256	.15	.13	.13	.02	–.02	–.11	–.24

Note: A line has been drawn through the pressure coefficients for which the data are doubtful.

TABLE 25.– CONTINUED

(c) Fuselage

Orifice No. \ α	3.86	8.02	16.34	24.65	26.74	28.77	32.86
301	0.16	0.06	-0.15	-0.78	-0.96	-1.02	-1.05
302	.20	.11	-.13	-.61	-.76	-.89	-1.03
303	.27	.21	.02	-.30	-.41	-.49	-.62
304	.37	.40	.44	.41	.39	.38	.34
305	.39	.48	.65	.78	.61	.85	.92
306	~~.47~~	~~.31~~	~~.33~~	~~.26~~	~~.24~~	~~.23~~	~~.18~~
307	.31	.27	.11	-.22	-.33	-.38	-.53
308	.20	.11	-.15	-.65	-.93	-1.09	-1.13
309	.08	.02	-.08	-.22	-.22	-.26	-.29
310	.08	.02	-.15	-.39	-.46	-.49	-.58
311	.08	.04	-.17	-.52	-.63	-.72	-.92
312	.16	.17	.17	.09	.07	.02	0
313	.20	.27	.40	.54	.59	.62	-.66
314	.16	.17	.15	0	-.07	-.09	-.18
315	.12	.08	-.08	-.41	-.52	-.60	-.64
316	.10	.02	-.15	-.44	-.52	-.57	-.71
317	.02	-.04	-.19	-.44	-.50	-.53	-.61
318	0	-.04	-.21	-.57	-.65	-.74	-.89
319	.04	.06	.04	-.04	-.09	-.11	-.13
320	.06	.13	.25	.39	.44	.49	.55
321	.06	.06	.08	0	-.02	-.04	-.08
322	0	-.02	-.17	-.46	-.57	-.64	-.79
323	0	-.06	-.21	-.46	-.54	-.57	-.66
324	-.14	-.19	-.25	-.39	-.44	-.47	-.53
325	-.04	.02	.13	.23	.28	.32	.39
326	-.06	-.04	.04	-.13	-.13	-.17	-.21
327	-.31	-.35	-.42	-.48	-.48	-.49	-.47
328	-.06	-.13	-.31	-.59	-.67	-.72	-.82
329	0	.06	.19	.33	.37	.40	.50
330	0	.02	.02	-.04	-.07	-.09	-.08
331	.10	.06	0	-.11	-.16	-.17	-.26
332	-.10	-.15	-.38	-.85	-.85	-.89	-1.05
333	-.20	-.15	-.02	.13	.18	.21	.29
334	-.16	-.11	.06	.18	.22	.23	.32
335	-.08	-.13	-.23	-.44	-.54	-.68	-.89
336	.02	0	-.04	-.26	-.35	-.49	-.68
337	-.22	-.19	-.08	0	.02	.04	.11
338	-.24	-.21	-.11	-.04	-.02	0	.05
339	.04	.02	0	-.18	-.24	-.36	-.53
340	~~2.45~~	~~2.48~~	~~2.46~~	~~2.52~~	~~2.50~~	~~2.47~~	~~2.92~~

Note: Lines have been drawn through the pressure coefficients for which the data are doubtful.

TABLE 25.- CONTINUED

(c) Fuselage (Concluded)

Orifice No. \ α	3.86	8.02	16.34	24.65	26.74	28.77	32.86
341	-0.14	-0.13	-0.08	-0.04	-0.04	-0.02	-0.02
342	-.27	-.25	-.25	-.28	-.26	-.26	-.21
343	.16	.15	.17	.16	.07	-.09	-.26
344	.12	.11	.11	0	-.07	-.19	-.32
345	-.14	-.13	-.13	-.11	-.09	-.11	-.13
346	-.12	-.11	-.06	-.04	-.04	-.04	-.05
347	-.12	-.08	-.06	-.07	-.04	-.06	-.02
348	-.24	-.23	-.27	-.35	-.37	-.38	-.32
349	-.31	-.29	-.38	-.44	-.46	-.47	-.39
350	.08	.08	.08	.04	.02	-.02	-.11
351	.02	.02	.04	.02	.02	-.02	-.11
352	.04	.04	.06	.04	.04	.02	-.08
353	-.06	-.04	-.08	-.13	-.16	-.19	-.13
354	-.14	-.13	-.21	-.26	-.30	-.34	-.29
355	-.04	-.02	-.04	-.04	-.07	-.11	-.13
356	.04	.04	.02	-.02	-.07	-.11	-.16
357	.10	.08	.08	0	-.02	-.06	-.13
358	~~-.37~~	~~.35~~	~~.31~~	~~.18~~	~~.16~~	~~.13~~	~~.05~~
359	0	0	0	-.02	-.04	-.06	-.11
360	-.04	-.04	-.04	-.09	-.13	-.17	-.26
361	-.24	-.25	-.29	-.33	-.35	-.36	-.34
362	-.16	-.19	-.27	-.30	-.30	-.30	-.29
363	0	0	-.04	-.11	-.13	-.13	-.11
364	.02	.02	0	-.07	-.09	-.11	-.11
365	.08	.08	.06	.04	.04	0	-.03
366	-.06	-.11	-.31	-.76	-.98	-1.09	-1.24
367	-.06	.02	.19	.33	.35	.38	.45
368	-.06	.02	.19	.33	.37	.40	.47
369	.08	.13	.19	.20	.20	.19	.18
370	.08	.13	.19	.20	.20	.19	.18
371	.10	.13	.17	.13	.13	.11	.05
372	.10	.13	.17	.13	.13	.11	.05

Note: A line has been drawn through the pressure coefficients for which the data are doubtful.

TABLE 25.– CONCLUDED

(d) Fuselage-duct rakes

Tube No. \ α	3.86	8.02	16.34	24.65	26.74	28.77	32.86
401 T.H.[a]	0.98	0.98	0.98	0.87	0.82	0.79	0.62
402 St.H.[b]	.02	0	.02	.04	-.02	-.02	-.08
403 T.H.	.98	.98	.98	.87	.82	.81	.70
404	-	-	-	-	-	-	-
405 St.H.	.10	.08	0	.02	0	-.02	-.16
406 T.H.	.98	.98	.98	.85	.78	.77	.62
407 T.H.	.98	.98	.96	.83	.78	.77	.62
408 St.H.	.14	.13	.08	.11	.04	0	-.08
409 T.H.	.98	.98	.98	.83	.80	.77	.65
410 T.H.	.98	.98	.98	.91	.87	.85	.76
411 St.H.	.10	.08	.06	.02	-.07	-.11	-.19
412 T.H.	.98	.98	.98	.83	.76	.72	.59
413 T.H.	.98	.98	.98	.87	.87	.85	.70
414 St.H.	0	-.06	-.11	-.34	-.48	-.55	-.76
415 T.H.	.98	.98	.92	.70	.61	.55	.38
416 T.H.	.98	.96	.94	.70	-.07	.04	.03
417 St.H.	-.18	-.23	-.25	-.43	-.57	-.60	-.49
418 T.H.	.96	.89	.69	.47	.24	0	-.35
501 T.H.	.78	.69	.60	.43	.37	.34	.19
502 St.H.	.73	.69	.56	.40	.35	.30	.22
503 T.H.	.80	.77	.60	.45	.37	.34	.22
504 T.H.	.80	.79	.60	.45	.39	.34	.22
505 St.H.	.73	.69	.56	.40	.35	.30	.22
506 T.H.	.80	.77	.60	.45	.39	.34	.24
507 T.H.	.78	.75	.62	.45	.39	.34	.24
508 St.H.	.71	.69	.56	.40	.35	.30	.22
509 T.H.	.80	.75	.62	.47	.39	.34	.24
510 T.H.	.82	.79	.62	.43	.37	.32	.22
511 St.H.	.73	.69	.56	.40	.35	.30	.22
512 T.H.	.86	.81	.65	.45	.39	.34	.22
513	-	-	-	-	-	-	-
514 St.H.	.71	.69	.56	.40	.35	.30	.22
515 T.H.	.90	.83	.67	.47	.39	.34	.24
516 T.H.	.90	.83	.67	.47	.39	.34	.24
517 St.H.	.71	.69	.56	.40	.35	.30	.22
518	-	-	-	-	-	-	-
519 T.H.	.88	.81	.65	.47	.39	.34	.24
520 St.H.	.71	.69	.56	.40	.35	.30	.22
521 T.H.	.88	.73	.60	.43	.37	.32	.22
522 St.H.	.71	.69	.56	.40	.35	.30	.22
523 T.H.	.71	.69	.62	.40	.35	.30	.19

[a]Total-head tube (coefficient given as P_t).

[b]Static-head tube (coefficient given as P_s).

TABLE 26.- PRESSURE COEFFICIENTS FOR THE FLYING MOCK-UP OF THE XP-92 AIRPLANE, $\beta = -10.06^{\circ}$, $\delta_e = -10^{\circ}$, $\delta_a = \pm 10^{\circ}$, $\delta_r = 0^{\circ}$

(a) Wing

Orifice No. \ α	4.02	8.18	16.54	24.87	26.90	28.89	32.93
101	0.02	0.15	0.37	0.57	0.60	0.64	0.69
102	-.06	-.61	-.45	-1.09	-1.32	-1.11	-1.11
103	-	-	-	-	-	-	-
104	-	-	-	-	-	-	-
105	.08	.27	.43	.60	.60	.62	.64
106	-.15	-.40	-.88	-2.09	-1.34	-1.11	-1.11
107	.21	.40	.33	.26	.30	.32	.25
108	-.27	-.71	-1.84	-1.92	-1.32	-1.11	-1.08
109	-.04	.06	.24	.43	.45	.49	.56
110	0	-.08	-.27	-2.96	-1.06	-1.09	-1.03
111	-.04	.08	.31	.47	.51	.53	.58
112	-.11	-.21	-.43	-1.36	-1.15	-1.11	-1.06
113	.04	.21	.43	.53	.55	.57	.61
114	-.17	-.40	-.90	-1.23	-1.11	-1.02	-1.03
115	.17	.35	.39	.40	.40	.40	.36
116	-.23	-.69	-1.90	-1.13	-1.09	-.98	-1.03
117	-.19	-.11	.08	.23	.26	.28	.33
118	.04	0	-.12	-.64	-.77	-.74	-.94
119	-.15	-.06	.12	.26	.30	.32	.39
120	.02	-.02	-.22	-.83	-.98	-.83	-.97
121	-.13	0	.24	.36	.40	.43	.47
122	-.06	-.15	-.39	-1.06	-1.06	-.94	-.97
123	-.17	.17	.39	.47	.47	.49	.53
124	-.15	-.31	-.94	-.96	-.94	-.79	-.92
125	.06	.27	.47	.45	.45	.55	.42
126	-.19	-.56	-2.00	-.89	-.85	-.74	-.86
127	-.23	-.19	-.06	.04	.04	.06	.08
128	.11	.08	-.02	-.51	-.57	-.64	-.78
129	-.23	-.17	-.02	.06	.06	.09	.11
130	.13	.08	-.06	-.70	-.79	-.74	-.83
131	-.27	-.17	.02	.11	.13	.15	.19
132	.04	-.02	-.31	-.83	-.85	-.74	-.83
133	-.19	-.04	.18	.28	.28	.30	.33
134	-.23	-.19	-.84	-.70	-.68	-.65	-.75
135	-.11	.13	.35	.38	.40	.40	.42
136	-.06	-.40	-.73	-.68	-.66	-.64	-.72
137	-.42	-.40	-.33	-.34	-.36	-.38	-.44
138	.35	.33	.33	-.13	-.38	-.55	-.72
139	-.40	-.38	-.31	-.32	-.36	-.38	-.42
140	.40	.35	.22	-.49	-.64	-.68	-.78

TABLE 26.- CONTINUED

(a) Wing (Concluded)

Orifice No. \ α	4.02	8.18	16.54	24.87	26.90	28.89	32.93
141	-0.52	-0.46	-0.39	-0.43	-0.43	-0.45	-0.47
142	.40	.35	-.04	-.66	-.70	-.68	-.78
143	-.33	-.25	-.20	-.21	-.21	-.21	-.22
144	.29	.21	-.45	-.55	-.57	-.60	-.75
145	-.44	-.25	-.06	-.02	-.02	-.02	0
146	.27	.08	-.41	-.51	-.51	-.53	-.69
147	-.98	-.98	-.98	-1.11	-1.17	-1.32	-1.50
148	.19	.15	.10	.06	-.04	-.15	-.25
149	~~-.35~~	~~-.33~~	~~-.41~~	~~-.64~~	~~-.74~~	~~-.81~~	~~-.92~~
150	-.25	-.21	-.41	-.62	-.66	-.70	-.81
151	-1.46	-1.53	-1.57	-1.79	-1.87	-1.96	-2.05
152	-.46	-.42	-.49	-.62	-.64	-.64	-.78
153	-1.54	-1.42	-1.33	-1.38	-1.47	-1.51	-1.56
154	-.52	-.44	-.43	-.53	-.55	-.60	-.72
155	-.71	-.46	-.29	-.23	-.23	-.23	-.19
156	.40	.17	-.31	-.51	-.51	-.55	-.69
157	-.33	-.33	-.31	-.38	-.43	-.53	-.64
158	.33	.31	.33	-.04	-.26	-.49	-.72
159	-.42	-.38	-.33	-.43	-.49	-.57	-.64
160	.40	.35	-.29	-.47	-.64	-.66	-.81
161	-.50	-.44	-.37	-.47	-.53	-.57	-.64
162	.33	.31	-.18	-.60	-.64	-.64	-.78
163	-.50	-.44	-.37	-.38	-.43	-.45	-.50
164	.29	.21	-.24	-.47	-.49	-.57	-.72
165	-.65	-.48	-.27	-.23	-.26	-.28	-.28
166	.27	.15	-.16	-.53	-.53	-.53	-.72
167	.06	.06	.08	-.02	-.15	-.38	-.56
168	.17	.19	.22	.02	-.15	-.45	-.64
169	.06	.08	.08	-.34	-.51	-.57	-.67
170	.17	.17	.18	-.43	-.62	-.66	-.78
171	-.15	-.06	-.08	-.38	-.47	-.53	-.67
172	.06	.08	-.12	-.47	-.55	-.62	-.81
173	-.15	.06	-.04	-.21	-.28	-.36	-.50
174	-.58	.13	-.10	-.38	-.43	-.53	-.75
175	-.13	-.27	-.06	-.17	-.21	-.30	-.42
176	0	.02	.02	-.17	-.21	-.32	-.42

Note: A line has been drawn through the pressure coefficients for which the data are doubtful.

TABLE 26.- CONTINUED

(b) Vertical tail

Orifice No. \ α	4.02	8.18	16.54	24.87	26.90	28.89	32.93
201	-1.45	-1.06	-1.10	-1.06	-1.00	-0.73	-0.62
202	.06	-.02	-.06	.04	-.11	-.46	-1.32
203	-.72	-.68	-.67	-.77	-.77	-.71	-.62
204	~~.17~~	~~.17~~	~~.16~~	~~.13~~	~~.09~~	~~0~~	~~0~~
205	-.45	-.45	-.31	-.62	-.63	-.63	-.65
206	~~.09~~	~~.11~~	~~.14~~	~~.15~~	~~.13~~	~~.08~~	~~.05~~
207	-.40	-.43	-.49	-.60	-.63	-.63	-.65
208	.23	.15	-.14	-.74	-.75	-.77	-1.03
209	-1.36	-1.36	-1.98	-1.92	-1.46	-1.33	-.97
210	.09	.02	-.12	-.26	-.19	-.29	-.76
211	-.64	-.68	-.75	-.91	-.90	-.92	-.87
212	.19	.15	.06	-.09	-.19	-.44	-.81
213	-.47	-.49	-.63	-.79	-.79	-.85	-.87
214	.17	.15	.06	-.15	-.44	-.54	-.87
215	-.34	-.38	-.49	-.66	-.69	-.73	-.76
216	~~.13~~	~~.11~~	~~-.06~~	~~-.57~~	~~-.52~~	~~-.63~~	~~-.37~~
217	-.57	-2.21	-1.84	-2.26	-2.90	-2.77	-1.49
218	.15	.09	-.04	-.15	-.13	-.19	-.51
219	-.51	-.51	-.55	-.74	-.81	-.90	-.95
220	.17	.13	.06	-.11	-.17	-.40	-.76
221	-.38	-.43	-.55	-.74	-.77	-.85	-.89
222	.11	.09	.02	-.26	-.44	-.61	-.81
223	-.38	-.45	-.53	-.72	-.77	-.85	-.87
224	.09	.06	-.04	-.30	-.44	-.56	-.76
225	-.83	-.83	-.75	-.96	-1.06	-1.04	-.87
226	.13	.11	.04	-.02	-.02	-.08	-.30
227	-.21	-.21	-.20	-.34	-.42	-.50	-.70
228	.09	.09	.04	-.06	-.13	-.31	-.62
229	~~.09~~	~~.11~~	~~.12~~	~~.13~~	~~.13~~	~~.08~~	~~.05~~
230	.09	.09	.04	-.15	-.29	-.50	-.73
231	-.11	-.13	-.16	-.32	-.40	-.48	-.62
232	.13	.11	.06	-.21	-.29	-.44	-.68
233	-.55	-.62	-.61	-.74	-.81	-.81	-.81
234	.11	.09	.02	-.02	-.02	-.11	-.27
235	-.57	-.60	-.63	-.68	-.58	-.75	-.76

Note: Lines have been drawn through the pressure coefficients for which the data are doubtful.

TABLE 26.- CONTINUED

(b) Vertical tail (Concluded)

Orifice No. \ α	4.02	8.18	16.54	24.87	26.90	28.89	32.93
236	-0.02	0.09	-0.22	-0.15	-0.15	-0.25	-0.43
237	-.09	-.11	-.12	-.26	-.31	-.42	-.59
238	.13	.13	.10	-.09	-.21	-.42	-.70
239	-.06	-.06	-.10	-.23	-.31	-.42	-.57
240	.11	.11	.06	-.19	-.27	-.38	-.62
241	-.49	-.53	-.55	-.68	-.71	-.73	-.78
242	.02	0	-.04	-.11	-.11	-.19	-.32
243	-.04	-.47	-.49	-.53	-.48	-.61	-.43
244	-.02	-.04	-.08	-.13	-.15	-.21	-.46
245	-.06	-.06	-.08	-.21	-.27	-.40	-.59
246	.11	.11	.08	-.06	-.21	-.40	-.68
247	-.02	-.02	-.06	-.19	-.27	-.38	-.54
248	.13	.13	.08	-.13	-.21	-.35	-.62
249	-.40	-.43	-.47	-.57	-.61	-.67	-.73
250	-.15	-.15	-.22	-.30	-.31	-.38	-.43
251	.02	0	-.04	-.09	-.13	-.25	-.54
252	.09	.09	.06	0	-.06	-.19	-.51
253	.04	.02	0	-.09	-.17	-.33	-.59
254	.11	.11	.08	-.02	-.11	-.31	-.62
255	.06	.06	.06	-.11	-.19	-.35	-.57
256	.13	.15	.10	-.06	-.15	-.33	-.59

TABLE 26.- CONTINUED

(c) Fuselage

Orifice No. \ α	4.02	8.18	16.54	24.87	26.90	28.89	32.93
301	0.04	-0.04	-0.24	-1.04	-1.11	-1.17	-1.13
302	.29	.19	-.12	-.54	-.64	-.72	-.87
303	.69	.44	.24	-.04	-.15	-.24	-.42
304	.69	.56	.67	.73	.74	.74	.71
305	.27	.33	.51	.65	.68	.72	.74
306	~~.02~~	~~.04~~	~~.02~~	~~-.08~~	~~-.11~~	~~-.13~~	~~-.18~~
307	0	-.06	-.24	-.52	-.57	-.65	-.71
308	0	-.11	-.47	-1.04	-1.09	-1.13	-.97
309	-.06	-.08	-.16	-.21	-.21	-.24	-.29
310	.08	-.02	-.27	-.61	-.68	-.78	-.92
311	.25	.19	-.04	-.40	-.51	-.63	-.82
312	.27	.33	.43	.46	.45	.44	.42
313	.04	.08	.18	.27	.30	.33	.37
314	-.04	-.08	-.22	-.42	-.49	-.57	-.68
315	-.04	-.08	-.27	-.58	-.68	-.78	-.92
316	-.02	-.06	-.14	-.27	-.32	-.37	-.45
317	.06	-.04	-.29	-.61	-.70	-.80	-.95
318	.15	.11	-.06	-.35	-.47	-.57	-.74
319	.17	.21	.29	.31	.30	.30	.29
320	0	.06	.24	.42	.47	.50	.58
321	-.13	-.15	-.24	-.40	-.45	-.50	-.58
322	-.13	-.19	-.35	-.65	-.74	-.85	-.97
323	-.13	-.13	-.41	-.33	-.36	-.44	-.47
324	-.08	-.15	-.31	-.50	-.55	-.61	-.66
325	-.08	-.02	.14	.33	.38	.41	.50
326	-.21	-.23	-.35	-.52	-.57	-.63	-.71
327	-.44	-.48	-.57	-.61	-.60	-.63	-.61
328	-.17	-.27	-.53	-.87	-.94	-1.04	-.95
329	-.08	-.04	.08	.21	.26	.28	.34
330	-.11	-.13	-.27	-.46	-.51	-.54	-.66
331	-.11	-.15	-.16	-.21	-.23	-.24	-.39
332	.08	.04	-.06	-.56	-1.02	-1.04	-1.00
333	-.25	-.19	-.04	.13	.17	.18	.24
334	-.13	-.04	.08	.23	.26	.26	.32
335	.11	.08	0	-.61	-.77	-.85	-.79
336	.17	.17	.10	-.35	-.60	-.70	-.74

Note: A line has been drawn through the pressure coefficients for which the data are doubtful.

TABLE 26.- CONTINUED

(c) Fuselage (Concluded)

Orifice No. \ α	4.02	8.18	16.54	24.87	26.90	28.89	32.93
337	-0.23	-0.19	-0.08	0.04	0.04	0.04	0.08
338	-.13	-.06	.04	.15	.17	.18	.21
339	.15	.13	.10	-.23	-.47	-.59	-.71
340	0	.02	.02	0	.02	.02	.16
341	-.11	-.06	-.02	.04	.04	.04	.05
342	0	.02	.08	.15	.15	.13	.16
343	-.19	-.23	-.29	-.40	-.47	-.59	-.61
344	-.15	-.15	-.18	-.31	-.40	-.50	-.58
345	-.23	-.23	-.18	-.21	-.23	-.28	-.39
346	-.15	-.13	-.08	-.08	-.11	-.13	-.21
347	-.04	-.02	.02	.06	.06	.04	.05
348	.02	.04	.10	.15	.15	.13	.11
349	.02	.04	.08	.13	.13	.13	.11
350	.06	.06	.06	0	-.04	-.09	-.47
351	-.04	-.02	-.02	.02	-.02	-.09	-.53
352	.02	.02	0	-.02	-.04	-.13	-.42
353	.08	.08	.10	.13	.09	.07	.05
354	.08	.08	.10	.11	.09	.04	-.03
355	.02	.02	.02	-.02	-.04	-.09	-.16
356	.06	.06	.06	-.02	-.06	-.11	-.26
357	.11	.11	.08	-.02	-.09	-.15	-.34
358	.31	.31	.27	.21	.15	.13	0
359	.02	.02	0	.04	0	-.04	-.13
360	-.04	-.06	-.10	-.08	-.11	-.17	-.39
361	-.15	-.15	-.18	-.17	-.19	-.23	-.32
362	-.08	-.08	-.06	-.08	-.13	-.15	-.26
363	0	.02	0	-.04	-.06	-.09	-.16
364	.08	.08	.08	.02	-.04	-.09	-.21
365	.11	.11	.10	.06	.04	0	-.13
366	.04	-.02	-.16	-.48	-1.02	-1.20	-1.05
367	-.04	.02	.16	.29	.30	.35	.37
368	-.11	-.04	.10	.25	.28	.30	.34
369	.04	.06	.12	.15	.13	.13	.11
370	.04	.06	.12	.15	.13	.13	.11
371	.08	.11	.14	.15	.11	.09	.05
372	.08	.11	.14	.15	.11	.09	.05

Note: Lines have been drawn through the pressure coefficients for which the data are doubtful.

TABLE 26.– CONCLUDED

(d) Fuselage-duct rakes

Tube No. \ α	4.02	8.18	16.54	24.87	26.90	28.89	32.93
401 T.H.[a]	0.87	0.87	0.83	0.72	0.68	0.63	0.49
402 St.H.[b]	-.23	-.26	-.35	-.47	-.51	-.65	-.86
403 T.H.	.96	.94	.85	.72	.70	.65	.46
404	-	-	-	-	-	-	-
405 St.H.	.04	.04	-.02	-.11	-.13	-.22	-.41
406 T.H.	.98	.98	.89	.72	.70	.63	.46
407 T.H.	.98	.98	.94	.77	.74	.70	.51
408 St.H.	.13	.13	.13	.06	.06	-.02	-.14
409 T.H.	.98	.98	.96	.77	.74	.70	.54
410 T.H.	.98	.98	.94	.81	.79	.74	.59
411 St.H.	.11	.13	.06	-.04	-.09	-.20	-.35
412 T.H.	.98	.98	.92	.72	.70	.63	.46
413 T.H.	.98	.98	.94	.72	.60	.39	.38
414 St.H.	.04	.02	-.17	-.45	-.57	-.78	-1.05
415 T.H.	.98	.96	.87	.64	.55	.65	.03
416 T.H.	.98	.94	.71	.32	.49	.26	-.35
417 St.H.	-.11	-.17	-.40	-.57	-.62	-.74	-.65
418 T.H.	.96	.92	.69	.40	.38	.11	-.51
501 T.H.	.72	.70	.62	.43	.40	.33	.22
502 St.H.	.68	.64	.54	.38	.36	.30	.16
503 T.H.	.72	.72	.62	.45	.40	.33	.22
504 T.H.	.74	.72	.60	.43	.40	.33	.22
505 St.H.	.68	.64	.54	.43	.36	.28	.16
506 T.H.	.74	.72	.60	.43	.38	.33	.22
507 T.H.	.70	.68	.58	.43	.38	.33	.22
508 St.H.	.66	.64	.54	.38	.36	.30	.16
509 T.H.	.70	.66	.58	.43	.40	.33	.24
510 T.H.	.83	.79	.67	.47	.43	.35	.22
511 St.H.	.68	.66	.54	.38	.36	.30	.16
512 T.H.	.89	.87	.71	.49	.45	.39	.24
513	-	-	-	-	-	-	-
514 St.H.	.68	.66	.54	.40	.36	.28	.16
515 T.H.	.85	.85	.73	.51	.47	.41	.24
516 T.H.	.79	.79	.71	.51	.47	.41	.24
517 St.H.	.66	.64	.54	.38	.36	.28	.16
518	-	-	-	-	-	-	-
519 T.H.	.89	.87	.73	.51	.45	.39	.24
520 St.H.	.68	.64	.54	.38	.36	.30	.16
521 T.H.	.79	.72	.62	.45	.40	.35	.19
522 St.H.	.66	.64	.54	.38	.36	.28	.16
523 T.H.	.70	.64	.54	.38	.36	.30	.14

[a]Total-head tube (coefficient given as P_t).

[b]Static-head tube (coefficient given as P_s).

TABLE 27.– PRESSURE COEFFICIENTS FOR THE FLYING MOCK-UP OF THE XP-92 AIRPLANE, $\beta = 9.98^{\circ}$; $\delta_e = -10^{\circ}$, $\delta_a = \mp 10^{\circ}$, $\delta_r = 0^{\circ}$

(a) Wing

Orifice No. \ α	4.02	8.18	16.54	24.87	26.90	28.89	32.93
101	0.04	0.15	0.36	0.50	0.56	0.59	0.64
102	-.15	-.23	-.49	-.81	-.98	-1.17	-1.44
103	–	–	–	–	–	–	–
104	–	–	–	–	–	–	–
105	.06	.13	.21	.19	.21	.20	.19
106	-.19	-.40	-.66	-4.09	-3.92	-3.40	-2.97
107	.09	.11	-.17	-.57	-.56	-.61	-.69
108	-.34	-.72	-3.13	-3.41	-3.10	-2.85	-2.58
109	0	.06	.17	.30	.38	.30	.36
110	-.23	-.30	-.53	-.80	-.79	-.80	-.97
111	0	.09	.26	.37	.40	.41	.44
112	-.26	-.34	-.57	-1.26	-1.56	-1.76	-1.81
113	.02	.09	.19	.22	.21	.22	.22
114	-.28	-.49	-3.04	-2.70	-2.38	-2.06	-1.92
115	.06	.06	-.06	-.24	.25	-.24	-.33
116	-.40	-.83	-2.19	-2.00	-1.88	-1.72	-1.64
117	-.15	-.11	.02	.13	.17	.18	.22
118	-.28	-.34	-.53	-.70	-.71	-.76	-.83
119	-.09	0	.17	.33	.35	.37	.42
120	-.30	-.34	-.53	-.89	-.92	-1.02	-1.11
121	-.02	.06	.23	.33	.35	.37	.39
122	-.28	-.36	-.45	-1.41	-1.50	-1.50	-1.50
123	0	.04	.13	.16	.17	.16	.14
124	-.30	-.49	-2.89	-1.87	-1.71	-1.57	-1.50
125	.02	.04	.04	-.09	-.08	-.11	-.17
126	-.40	-.89	-1.66	-1.50	-1.40	-1.33	-1.31
127	-.11	-.09	.02	.11	.13	.13	.17
128	-.28	-.32	-.43	-.59	-.63	-.67	-.81
129	-.06	0	.13	.22	.23	.24	.28
130	-.26	-.30	-.45	-.70	-.75	-.85	-.97
131	-.04	0	.13	.20	.21	.22	.25
132	-.26	-.34	-.45	-1.26	-1.25	-1.22	-1.25
133	-.02	.06	.15	.18	.19	.20	.17
134	-.30	-.40	-1.55	-1.35	-1.25	-1.20	-1.19
135	.04	.11	.15	.07	.06	.07	0
136	-.40	-1.87	-1.02	-1.09	-1.04	-1.02	-1.03
137	-.02	0	.06	.11	.11	.11	.11
138	-.13	-.15	-.19	-.33	-.38	-.46	-.61
139	0	.04	.11	.13	.15	.16	.14
140	-.11	-.13	-.21	-.41	-.50	-.59	-.78

TABLE 27.- CONTINUED

(a) Wing (Concluded)

Orifice No. \ α	4.02	8.18	16.54	24.87	26.90	28.89	32.93
141	-0.02	0	0.09	0.09	0.11	0.11	0.11
142	-.13	-.15	-.28	-.83	-.92	-.96	-1.03
143	0	.04	.09	.11	.13	.13	.11
144	-.23	-.26	-.98	-1.02	-.98	-.96	-1.00
145	.02	.06	.11	.07	.06	.07	.03
146	-.30	-1.26	-.74	-.85	-.83	.83	-.92
147	.11	.13	.17	.20	.31	.50	.64
148	-.13	-.13	-.15	-.26	-.29	-.39	-.53
149	~~0~~	~~0~~	~~-.02~~	~~.04~~	~~-.02~~	~~.09~~	~~-.17~~
150	-.11	-.13	-.19	-.41	-.52	-.63	-.81
151	.15	.30	.34	.37	.38	.37	.39
152	-.11	-.17	-.40	-1.07	-1.06	-1.07	-1.11
153	-.13	-.19	.51	.44	.44	.46	.47
154	-.30	-.30	-.89	-.96	-.94	-.93	-1.00
155	.09	.15	.17	.11	.11	.09	.03
156	-.38	-.89	-.79	-.85	-.81	-.83	-.92
157	.04	.06	.13	.18	.17	.16	.14
158	-.06	-.09	-.13	-.22	-.27	-.37	-.50
159	.04	.06	.11	.13	.13	.11	-.08
160	-.04	-.06	-.13	-.30	-.40	-.52	-.69
161	0	.02	.04	.02	.02	0	0
162	-.06	-.13	-.34	-.89	-.90	-.91	-1.00
163	-.02	.02	.02	.02	.02	0	0
164	-.19	-.23	-.81	-.85	-.83	-.83	-.89
165	0	.04	.06	.02	.04	.02	0
166	-.28	-.64	-.64	-.74	-.73	-.76	-.83
167	.13	.13	.17	.18	.17	.13	.06
168	.11	.11	.13	.11	.11	.04	-.08
169	.09	.09	.09	.02	0	-.09	-.22
170	.11	.09	.06	-.04	-.11	-.22	-.42
171	.09	.09	-.02	-.35	-.38	-.44	-.50
172	.09	.06	-.13	-.65	-.71	-.76	-.83
173	.11	.04	-.17	-.28	-.29	-.33	-.39
174	.04	-.19	-.51	-.65	-.67	-.72	-.78
175	-.02	-.17	-.21	-.33	-.35	-.39	-.44
176	-.02	-.34	-.36	-.54	-.58	-.63	-.72

Note: A line has been drawn through the pressure coefficients for which the data are doubtful.

TABLE 27.– CONTINUED

(b) Vertical tail

Orifice No. \ α	4.02	8.18	16.54	24.87	26.90	28.89	32.93
201	-0.02	-0.09	-0.13	0.02	0.02	-0.39	-1.39
202	-1.32	-1.17	-1.00	-.98	-1.04	-.80	-.61
203	.21	.15	.09	-.13	-.17	-.61	-1.17
204	~~-.06~~	~~-.06~~	~~-.09~~	~~-.04~~	~~-.04~~	~~0~~	~~-.08~~
205	.23	.19	-.16	-.76	-.85	-.80	-1.06
206	~~-.09~~	~~-.11~~	~~-.16~~	~~-.16~~	~~-.15~~	~~-.11~~	~~-.03~~
207	.21	.15	-.18	-.72	-.79	-.76	-1.03
208	-.43	-.45	-.52	-.63	-.66	-.67	-.67
209	.11	.02	-.13	-.24	-.26	-.22	-.78
210	-1.28	-1.28	-1.91	-1.54	-1.57	-1.33	-.92
211	.19	.15	.07	-.09	-.13	-.37	-.86
212	-.66	-.68	-.80	-.89	-.96	-.93	-.86
213	.15	.11	.07	-.18	-.26	-.65	-.89
214	-.45	-.47	-.63	-.76	-.81	-.85	-.86
215	.19	.15	.04	-.48	-.43	-.61	-.83
216	~~-.43~~	~~-.45~~	~~-.61~~	~~-.78~~	~~-.85~~	~~-.87~~	~~-.89~~
217	.13	.09	.04	-.13	-.15	-.18	-.50
218	-2.62	-2.66	-1.91	-2.57	-2.83	-2.87	-1.47
219	.13	.11	.07	-.13	-.19	-.37	-.78
220	-.49	-.53	-.57	-.76	-.81	-.87	-.92
221	.09	.06	.02	-.30	-.43	-.67	-.83
222	-.43	-.43	-.54	-.74	-.81	-.87	-.92
223	.09	.06	-.04	-.30	-.38	-.57	-.78
224	-.38	-.45	-.54	-.74	-.81	-.87	-.92
225	.11	.06	0	-.07	-.06	-.11	-.33
226	-.81	-.74	-.70	-.87	-.89	-1.11	-.97
227	.06	.06	.02	-.11	-.15	-.28	-.64
228	-.19	-.19	-.20	-.33	-.28	-.48	-.69
229	~~.09~~	~~.11~~	~~.16~~	~~.16~~	~~.15~~	~~.11~~	~~.03~~
230	-.15	-.15	-.20	-.33	-.40	-.50	-.67
231	.11	.11	.07	-.20	-.30	-.41	-.67
232	-.11	-.13	-.18	-.35	-.40	-.50	-.64
233	.11	.09	.02	-.02	-.04	-.07	-.28
234	-.53	-.53	-.57	-.67	-.70	-.85	-.86
235	.06	.06	.02	-.04	-.09	-.16	-.47

Note: Lines have been drawn through the pressure coefficients for which the data are doubtful.

TABLE 27.- CONTINUED

(b) Vertical tail (Concluded)

Orifice No. \ α	4.02	8.18	16.54	24.87	26.90	28.89	32.93
236	-0.68	-0.81	-1.02	-0.98	-0.96	-0.70	-0.81
237	.13	.11	.09	-.09	-.17	-.39	-.72
238	-.09	-.09	-.11	-.24	-.30	-.41	-.61
239	.13	.13	.09	-.16	-.26	-.35	-.67
240	-.06	-.09	-.13	-.28	-.34	-.46	-.64
241	-.02	-.02	-.07	-.13	-.15	-.18	-.33
242	-.45	-.45	-.50	-.59	-.62	-.74	-.81
243	.04	.04	0	-.07	-.11	-.16	-.47
244	-.26	-.26	-.61	-.35	-.40	-.39	-.69
245	.09	.09	.07	-.11	-.17	-.39	-.69
246	-.04	-.06	-.07	-.20	-.26	-.37	-.61
247	.13	.13	.09	-.13	-.21	-.33	-.64
248	-.02	-.02	-.07	-.20	-.26	-.37	-.58
249	-.17	-.17	-.22	-.28	-.32	-.35	-.44
250	-.38	-.38	-.44	-.52	-.55	-.65	-.75
251	.06	.06	.02	-.04	-.06	-.16	-.47
252	.02	.02	-.02	-.09	-.11	-.18	-.50
253	.06	.06	.04	-.09	-.13	-.30	-.64
254	.04	.04	.04	-.07	-.11	-.26	-.58
255	.09	.09	.07	-.09	-.15	-.30	-.61
256	.09	.09	.07	-.07	-.13	-.26	-.56

TABLE 27.– CONTINUED

(c) Fuselage

Orifice No. \ α	4.02	8.18	16.54	24.87	26.90	28.89	32.93
301	0.04	-0.06	-0.34	-1.04	-1.11	-1.16	-1.17
302	-.04	-.13	-.40	-1.15	-1.15	-1.16	-1.06
303	-.04	-.13	-.32	-.63	-.69	-.73	-.81
304	.06	.06	.04	-.04	-.06	-.07	-.14
305	.28	.38	.55	.72	.75	.80	.86
306	~~.36~~	~~.43~~	~~.49~~	~~.50~~	~~.50~~	~~.47~~	~~.44~~
307	.51	.47	.32	.07	-.02	-.13	-.31
308	.26	.13	-.21	-.61	-.71	-.82	-1.03
309	-.02	-.11	-.26	-.39	-.42	-.44	-.53
310	-.06	-.09	-.15	-.26	-.29	-.36	-.44
311	-.06	-.11	-.28	-.59	-.67	-.80	-1.00
312	-.06	-.11	-.19	-.35	-.40	-.44	-.56
313	.15	.23	.40	.59	.63	.67	.75
314	.30	.34	.38	.35	.33	.31	.25
315	.30	.26	.11	-.20	-.27	-.40	-.61
316	.13	.02	-.26	-.59	-.69	-.80	-1.00
317	-.11	-.11	-.17	-.33	-.35	-.40	-.50
318	-.13	-.17	-.34	-.65	-.73	-.82	-1.00
319	-.15	-.17	-.28	-.46	-.48	-.53	-.64
320	-.09	-.04	.04	.18	.21	.24	.31
321	.15	.21	.30	.30	.33	.33	.33
322	.15	.15	.02	-.22	-.29	-.38	-.56
323	.04	-.06	-.32	-.63	-.71	-.82	-1.00
324	-.26	-.26	-.30	-.54	-.61	-.64	-.69
325	-.19	-.15	-.11	-.02	.02	.07	.08
326	0	.06	.15	.20	.19	.20	.19
327	-.43	-.47	-.55	-.59	-.58	-.58	-.61
328	-.04	-.09	-.28	-.59	-.63	-.69	-.72
329	-.09	-.02	.09	.24	.29	.33	.42
330	.02	.09	.19	.24	.25	.29	.33
331	-.04	-.19	-.21	-.26	-.25	-.27	-.42
332	-.32	-.36	-.49	-.70	-.75	-.87	-1.06
333	-.26	-.19	-.04	.11	.15	.18	.25
334	-.17	-.09	.09	.24	.27	.29	.36
335	-.30	-.34	-.43	-.65	-.69	-.80	-.94
336	-.17	-.19	-.26	-.44	-.48	-.60	-.75
337	-.23	-.19	-.09	.02	.04	.07	.11
338	-.26	-.21	-.06	.04	.06	.07	.11
339	-.15	-.15	-.17	-.33	-.38	-.49	-.64
340	–	–	–	–	–	–	–

Note: A line has been drawn through the pressure coefficients for which the data are doubtful.

TABLE 27.– CONTINUED

(c) Fuselage (Concluded)

Orifice No. \ α	4.02	8.18	16.54	24.87	26.90	28.89	32.93
341	-0.11	-0.09	-0.02	0.04	0.04	0.04	0.06
342	-.23	-.19	-.13	-.09	-.11	-.13	-.14
343	.13	.13	.11	-.11	-.25	-.49	-.72
344	.13	.11	.09	-.22	-.35	-.58	-.78
345	0	0	.06	.11	.11	.07	.08
346	0	.02	.09	.13	.13	.09	.11
347	-.04	-.02	.02	.07	.06	.04	.03
348	-.15	-.13	-.06	-.09	-.11	-.13	-.22
349	-.21	-.19	-.15	-.16	-.17	-.22	-.33
350	.04	.06	.04	-.02	-.04	-.13	-.25
351	0	0	0	-.04	-.06	-.11	-.19
352	.04	.06	.09	.09	.08	.04	-.06
353	.11	.15	.15	.18	.15	.09	-.06
354	.02	.04	.02	0	-.04	-.11	-.39
355	-.06	-.04	-.02	0	-.02	-.11	-.39
356	.04	.06	.04	-.02	-.04	-.11	-.39
357	.09	.09	.09	-.02	-.06	-.16	-.36
358	~~.32~~	~~.32~~	~~.28~~	~~.20~~	~~.17~~	~~.09~~	~~-.03~~
359	.04	.02	.02	-.04	-.06	-.13	-.22
360	-.04	-.04	-.04	-.07	-.11	-.16	-.31
361	-.15	-.19	-.21	-.26	-.27	-.31	-.42
362	-.11	-.13	-.17	-.22	-.27	-.31	-.50
363	0	0	-.04	0	-.04	-.07	-.19
364	0	0	.02	.02	0	-.04	-.22
365	.09	.09	.09	.07	.04	-.02	-.19
366	-.26	-.30	-.40	-.76	-.94	-1.11	-1.31
367	-.04	.04	.21	.39	.42	.44	.53
368	-.13	-.04	.11	.26	.29	.33	.39
369	.04	.09	.15	.17	.17	.13	.11
370	.04	.09	.15	.17	.17	.13	.11
371	.09	.11	.15	.15	.13	.09	.03
372	.09	.11	.15	.15	.13	.09	.03

Note: A line has been drawn through the pressure coefficients for which the data are doubtful.

TABLE 27.– CONCLUDED

(d) Fuselage-duct rakes

Tube No. \ α	4.02	8.18	16.54	24.87	26.90	28.89	32.93
401 T.H.[a]	0.98	0.98	0.91	0.67	0.79	0.54	0.39
402 St.H.[b]	.47	.47	.38	.30	.27	.22	.11
403 T.H.	.98	.98	.96	.84	.81	.78	.67
404	–	–	–	–	–	–	–
405 St.H.	.28	.26	.19	.16	.11	.04	-.11
406 T.H.	.98	.98	.96	.84	.81	.76	.67
407 T.H.	.98	.98	.96	.82	.79	.76	.64
408 St.H.	.15	.17	.13	.11	.06	.02	-.11
409 T.H.	.98	.98	.96	.87	.81	.76	.67
410 T.H.	.98	.98	.94	.89	.79	.80	.72
411 St.H.	.09	.09	0	-.11	-.17	-.24	-.36
412 T.H.	.98	.96	.91	.78	.71	.65	.47
413 T.H.	.98	.96	.91	.72	.60	.50	.25
414 St.H.	-.02	-.04	-.28	-.35	-.40	-.50	-.36
415 T.H.	.98	.94	.83	.63	.54	.43	.14
416 T.H.	.96	.89	.66	.15	.15	.11	-.31
417 St.H.	-.15	-.19	-.47	-.61	-.63	-.65	-.64
418 T.H.	.91	.83	.55	.41	.31	-.17	-.53
501 T.H.	.66	.66	.55	.41	.35	.30	.17
502 St.H.	.64	.60	.51	.39	.33	.26	.11
503 T.H.	.66	.66	.57	.41	.35	.30	.17
504 T.H.	.66	.66	.57	.41	.35	.30	.17
505 St.H.	.64	.60	.51	.37	.33	.26	.11
506 T.H.	.66	.62	.55	.41	.35	.28	.17
507 T.H.	.66	.62	.55	.41	.35	.30	.17
508 St.H.	.64	.60	.51	.37	.31	.26	.11
509 T.H.	.72	.66	.55	.43	.37	.30	.19
510 T.H.	.66	.62	.51	.37	.35	.26	.11
511 St.H.	.64	.60	.51	.39	.33	.26	.14
512 T.H.	.68	.62	.51	.37	.33	.26	.14
513	–	–	–	–	–	–	–
514 St.H.	.64	.60	.51	.39	.33	.26	.11
515 T.H.	.68	.64	.51	.37	.33	.26	.14
516 T.H.	.68	.64	.53	.37	.33	.26	.14
517 St.H.	.64	.60	.51	.39	.33	.26	.11
518	–	–	–	–	–	–	–
519 T.H.	.68	.57	.53	.37	.33	.26	.14
520 St.H.	.64	.60	.51	.39	.33	.26	.11
521 T.H.	.66	.62	.51	.37	.33	.26	.14
522 St.H.	.64	.60	.51	.37	.33	.26	.11
523 T.H.	.62	.57	.49	.35	.31	.24	.11

[a]Total-head tube (coefficient given as P_t).

[b]Static-head tube (coefficient given as P_s).

TABLE 28.– PRESSURE COEFFICIENTS FOR THE FLYING MOCK-UP OF THE XP-92 AIRPLANE, $\beta = 0.13^{\circ}$, $\delta_e = -10^{\circ}$, $\delta_a = 0^{\circ}$, $\delta_r = -10^{\circ}$

(a) Wing

Orifice No. \ α	3.98	8.15	16.51	24.86	26.94	28.95	33.00
101	0	0.11	0.30	0.55	0.59	0.65	0.68
102	-.13	-.23	-.49	-.87	-1.02	-1.36	-1.62
103	---	---	---	---	---	---	---
104	---	---	---	---	---	---	---
105	.06	.19	.32	.40	.41	.45	.46
106	-.19	-.40	-.98	-3.34	-2.96	-2.43	-1.65
107	.15	.23	.06	.15	.20	-.17	-.14
108	-.31	-.71	-2.49	-2.92	-2.52	-2.17	-1.57
109	-.06	.04	.23	.38	.41	.45	.51
110	-.15	-.21	-.36	-.64	-.78	-.83	-.86
111	-.04	.06	.28	.45	.41	.49	.54
112	-.19	-.29	-.53	-1.53	-1.76	-1.64	-1.35
113	.02	.15	.32	.40	.26	.43	.46
114	-.23	-.44	-1.98	-1.89	-1.76	-1.53	-1.27
115	.13	.21	.17	.11	.07	.09	.08
116	-.33	-.75	-2.49	-1.60	-1.52	-1.34	-1.08
117	-.19	-.11	.06	.21	.24	.26	.32
118	-.15	-.19	-.28	-.60	-.63	-.62	-.81
119	-.15	-.06	.11	.28	.30	.15	.41
120	-.17	-.23	-.38	-.68	-.87	-.89	-1.00
121	-.09	.02	.21	.28	.39	.43	.46
122	-.19	-.27	-.43	-1.38	-1.43	-1.30	-1.16
123	.02	.11	.28	.32	.33	.36	.35
124	-.23	-.42	-2.19	-1.32	-1.28	-1.17	-1.05
125	.06	.17	.26	.21	.20	.21	.16
126	-.32	-.69	-1.64	-1.15	-1.13	-1.02	-.97
127	-.19	-.15	-.02	.09	.11	.15	.16
128	-.13	-.17	-.26	-.53	-.57	-.60	-.76
129	-.17	-.13	.02	.13	.16	.17	.22
130	-.11	-.15	-.30	-.47	-.78	-.81	-.95
131	-.17	-.08	.06	.17	.18	.21	.24
132	-.15	-.21	-.45	-1.02	-1.07	-1.00	-1.00
133	-.11	0	.17	.26	.26	.28	.30
134	-.19	-.33	-1.04	-.94	-.96	-.89	-.62
135	0	.13	.26	.28	.26	.28	.24
136	-.30	-.58	-.83	-.81	-.83	-.79	-.89
137	-.23	-.21	-.15	-.09	-.09	-.09	-.11
138	.09	.06	0	-.15	-.22	-.32	-.57
139	-.23	-.21	-.13	-.09	-.09	-.09	-.11
140	.15	.11	0	-.40	-.57	-.64	-.81

TABLE 28.- CONTINUED

(a) Wing (Concluded)

Orifice No. \ α	3.98	8.15	16.51	24.86	26.94	28.95	33.00
141	-0.30	-0.23	-0.15	-0.15	-0.13	-0.11	-0.11
142	.13	.11	-.15	-.77	-.83	-.81	-.92
143	-.21	-.15	-.06	-.02	-.02	0	.02
144	.02	-.08	-.60	-.72	-.74	-.74	-.81
145	-.17	-.08	0	.06	.07	.06	.08
146	-.02	-.25	-.49	-.66	-.67	-.68	-.78
147	-.43	-.42	-.36	-.32	-.35	-.34	-.38
148	.21	.23	.19	.09	.04	-.04	-.38
149	~~-.15~~	~~-.15~~	~~-.17~~	~~-.32~~	~~-.30~~	~~-.32~~	~~-.41~~
150	-.02	-.02	-.11	-.36	-.48	-.53	-.76
151	-.74	-.67	-.55	-.47	-.48	-.47	-.46
152	.40	.31	-.23	-.70	-.78	-.79	-.86
153	-.74	-.65	-.53	-.47	-.41	-.40	-.27
154	.19	0	-.49	-.64	-.70	-.70	-.81
155	-.26	-.11	.04	-.21	-.20	-.17	-.14
156	0	-.25	-.43	-.60	-.65	-.70	-.84
157	-.19	-.17	-.13	-.11	-.11	-.13	-.19
158	.11	.08	.04	-.04	-.13	-.21	-.49
159	-.19	-.17	-.13	-.13	-.18	-.17	-.22
160	.15	.15	.06	-.36	-.52	-.62	-.78
161	-.21	-.19	-.17	-.21	-.24	-.23	-.24
162	.13	.11	-.38	-.74	-.78	-.77	-.84
163	-.28	-.19	-.17	-.15	-.18	-.15	-.16
164	.09	-.02	-.45	-.60	-.20	-.66	-.73
165	-.28	-.13	.06	-.02	-.04	-.04	.05
166	-.02	-.19	-.38	-.55	-.57	-.64	-.73
167	.06	.27	.09	.11	.04	0	-.19
168	.11	.11	.13	.13	.04	-.02	-.30
169	.06	.06	.06	-.17	-.26	-.32	-.51
170	.11	.11	.09	-.23	-.38	-.47	-.70
171	.04	.06	-.13	-.36	-.40	-.45	-.51
172	.11	.08	-.26	-.55	-.62	-.68	-.78
173	.06	.06	-.11	-.23	-.30	-.32	-.35
174	.11	.04	-.26	-.47	-.53	-.57	-.68
175	.04	.02	-.15	-.30	-.34	-.36	-.41
176	.09	.04	-.23	-.43	-.47	-.53	-.59

Note: A line has been drawn through the pressure coefficients for which the data are doubtful.

TABLE 28.– CONTINUED

(b) Vertical Tail

Orifice No. \ α	3.98	8.15	16.51	24.86	26.94	28.95	33.00
201	0.04	0	-0.11	-0.02	-0.33	-0.38	-0.57
202	-.13	-.15	-.21	-.55	-.35	-.32	-.68
203	-.04	-.09	-.19	-.55	-.30	-.47	-.70
204	~~.15~~	~~.19~~	~~.15~~	~~.13~~	~~.13~~	~~.09~~	~~0~~
205	-.04	-.09	-.17	-.55	-.39	-.45	-.76
206	~~.11~~	~~.15~~	~~.19~~	~~.19~~	~~.20~~	~~.17~~	~~-.08~~
207	-.04	-.09	-.17	-.34	-.39	-.45	-.73
208	-.09	-.15	-.23	-.38	-.44	-.43	-.76
209	-.09	-.09	-.19	-.38	-.41	-.47	-.65
210	-.15	-.17	-.23	-.36	-.39	-.38	-.62
211	-.06	-.11	-.19	-.36	-.44	-.47	-.70
212	-.17	-.19	-.26	-.40	-.46	-.47	-.73
213	-.11	-.13	-.21	-.40	-.48	-.53	-.78
214	-.15	-.19	-.26	-.43	-.48	-.51	-.81
215	-.04	-.09	-.15	-.34	-.41	-.47	-.70
216	~~-.17~~	~~-.21~~	~~-.28~~	~~-.47~~	~~-.57~~	~~-.55~~	~~-.84~~
217	0	-.02	-.09	-.23	-.28	-.34	-.51
218	-.21	-.21	-.23	-.34	-.37	-.38	-.51
219	-.06	-.09	-.15	-.32	-.39	-.47	-.70
220	-.19	-.21	-.26	-.43	-.48	-.53	-.78
221	-.09	-.11	-.19	-.38	-.48	-.60	-1.38
222	-.21	-.23	-.09	-.51	-.59	-.66	-.92
223	-.09	-.11	-.19	-.38	-.50	-.57	-.78
224	-.21	-.23	-.09	-.53	-.61	-.68	-.84
225	.15	.13	.11	-.02	0	-.04	-.14
226	-.47	-.47	-.26	-.55	-.59	-.64	-.78
227	.19	.19	.15	.06	.02	-.02	-.16
228	-.30	-.30	-.34	-.49	-.54	-.62	-.78
229	~~.11~~	~~.13~~	~~.19~~	~~.19~~	~~.20~~	~~.17~~	~~.11~~
230	-.28	-.30	-.34	-.51	-.61	-.70	-.86
231	.19	.19	.15	0	-.02	-.13	-.30
232	-.19	-.21	-.26	-.47	-.52	-.62	-.70
233	.17	.17	.13	.09	.04	.02	-.11
234	-.45	-.47	-.45	-.53	-.57	-.62	-.76
235	.28	.28	.19	.19	.16	.11	.03

Note: Lines have been drawn through the pressure coefficients for which the data are doubtful.

TABLE 28.- CONTINUED

(b) Vertical tail (Concluded)

Orifice No. \ α	3.98	8.15	16.51	24.86	26.94	28.95	33.00
236	-0.47	-0.47	-0.45	-0.62	-0.67	-0.72	-0.92
237	.34	.32	.28	.19	.18	.11	- 03
238	-.30	-.30	-.32	-.53	-.59	-.68	-.86
239	.26	.28	.23	.09	.02	.04	-.19
240	-.28	-.30	-.34	-.49	-.52	-.60	-.68
241	.09	.09	.02	-.02	-.04	-.09	-.16
242	-.30	-.30	-.30	-.60	-.41	-.45	-.59
243	.17	.17	.13	.06	.04	0	-.11
244	-.23	-.26	-.30	-.40	-.41	-.49	-.65
245	.21	.21	.19	.09	.04	-.02	-.19
246	-.11	-.13	-.16	-.53	-.37	-.47	-.62
247	-.21	.21	.19	.04	0	-.09	-.24
248	-.11	-.11	-.16	-.30	-.30	-.43	-.54
249	-.40	-.40	-.38	-.43	-.44	-.43	-.65
250	-.49	-.38	-.23	-.30	-.35	-.38	-.54
251	.11	.11	.09	0	-.02	-.09	-.22
252	0	0	-.02	-.13	-.16	-.21	-.35
253	.13	.13	.09	0	-.07	-.13	-.30
254	.09	.09	.04	-.06	-.11	-.19	-.38
255	.13	.13	.09	-.04	-.09	-.17	-.30
256	.06	.06	.04	-.11	-.16	-.23	-.38

TABLE 28.– CONTINUED

(c) Fuselage

Orifice No. \ α	3.98	8.15	16.51	24.86	26.94	28.95	33.00
301	0.15	0.06	-0.17	-0.81	-1.02	-1.02	-1.08
302	.21	.11	-.15	-.62	-.76	-.91	-1.05
303	.25	.21	.02	-.30	-.39	-.47	-.62
304	.35	.40	.42	.43	.41	.40	.35
305	.38	.48	.61	.79	.83	.87	.95
306	~~.27~~	~~.31~~	~~.31~~	~~.28~~	~~.26~~	~~.21~~	~~.16~~
307	.29	.25	.09	-.21	-.28	-.40	-.57
308	.19	0	-.15	-.77	-.93	-1.13	-1.19
309	.06	0	-.09	-.19	-.22	-.21	-.30
310	.06	-.02	-.17	-.38	-.44	-.51	-.59
311	.08	.02	-.17	-.51	-.61	-.94	-1.22
312	.15	.17	.17	.11	.07	.06	0
313	.19	.27	.40	.55	.59	.62	.68
314	.17	.17	.13	0	-.04	-.11	-.22
315	.13	.08	-.09	-.40	-.50	-.64	-.84
316	.08	.02	-.15	-.43	-.50	-.57	-.76
317	0	-.04	-.19	-.40	-.50	-.55	-.62
318	0	-.04	-.21	-.53	-.65	-.72	-.92
319	.04	.04	.04	-.04	-.07	-.09	-.19
320	.06	.13	.26	.40	.44	-.49	.57
321	.04	.06	.06	0	-.02	-.04	-.19
322	0	-.02	-.17	-.47	-.57	-1.09	-.86
323	-.02	-.06	-.21	-.45	-.52	-1.00	-.68
324	-.17	-.19	-.28	-.40	-.44	-.47	-.51
325	-.04	0	.11	.26	.30	.34	.43
326	-.06	-.04	-.07	-.13	-.16	-.17	-.24
327	-.33	-.17	-.42	-.47	-.48	-.26	-.49
328	-.06	-.15	-.34	-.60	-.72	-.72	-.81
329	0	.06	.17	.34	.37	.43	.51
330	0	.02	0	-.04	-.09	-.11	-.16
331	.06	.04	-.02	-.13	-.16	-.17	-.32
332	-.15	-.19	-.42	-.87	-.89	-.89	-1.16
333	-.19	-.13	.02	.19	.22	.26	.32
334	-.13	-.06	.09	.26	.28	.32	.35
335	-.13	-.06	.30	-.53	-.61	-.70	-1.00
336	-.06	-.08	-.13	-.38	-.46	-.57	-.78

Note: A line has been drawn through the pressure coefficients for which the data are doubtful.

TABLE 28.- CONTINUED

(c) Fuselage (Concluded)

Orifice No. \ α	3.98	8.15	16.51	24.86	26.94	28.95	33.00
337	-0.19	-0.15	-0.04	0.09	0.11	0.13	0.16
338	-.19	-.15	-.02	.11	.13	.15	.19
339	-.06	-.08	-.13	-.32	-.39	-.49	-.65
340	~~2.42~~	~~2.42~~	~~2.43~~	~~2.47~~	~~2.50~~	~~2.47~~	~~3.00~~
341	-.08	-.06	0	.06	.07	.06	.08
342	-.11	-.08	-.02	.04	.04	.04	.05
343	.11	.08	0	-.09	-.09	-.17	-.38
344	.13	.11	.09	-.09	-.13	-.23	-.46
345	-.13	-.13	-.11	-.06	-.09	-.11	-.16
346	-.08	-.08	-.04	0	-.02	-.02	-.08
347	-.04	-.02	.02	.06	.07	-.04	.05
348	-.06	-.04	-.02	.02	.02	.02	-.03
349	-.08	-.08	-.04	0	0	-.02	-.05
350	.04	.04	.02	0	-.02	-.09	-.19
351	0	0	0	0	-.24	-.06	-.19
352	0	0	0	-.02	-.26	-.11	-.24
353	.06	.08	.09	.11	.11	.11	.05
354	.06	.06	0	.06	.04	.02	-.08
355	.06	.06	0	.06	.04	.04	-.05
356	.11	.11	.09	.06	.04	0	-.08
357	.06	.06	.04	0	-.02	-.06	-.16
358	~~.38~~	~~.38~~	~~.32~~	~~.26~~	~~.22~~	~~.17~~	~~.05~~
359	.02	.02	0	-.02	-.04	.09	-.11
360	-.06	-.06	-.13	-.15	-.22	-.26	-.32
361	-.17	-.21	-.21	-.21	-.24	-.26	-.32
362	-.02	-.02	-.02	-.06	-.11	-.19	-.32
363	.04	.04	.04	.02	0	-.04	-.14
364	.08	.08	.09	.04	0	-.02	-.08
365	.13	.11	.09	.11	.11	.06	-.03
366	-.08	-.15	-.34	-.77	-.98	-1.06	-1.30
367	-.04	.04	.21	.36	.41	.43	.49
368	-.04	.02	.19	.36	.41	.45	.49
369	.11	.13	.19	.23	.24	.21	.19
370	.11	.13	.19	.23	.24	.21	.19
371	.11	.15	.19	.19	.20	.15	.08
372	.11	.15	.19	.19	.20	.15	.08

Note: Lines have been drawn through the pressure coefficients for which the data are doubtful.

TABLE 28.– CONCLUDED

(d) Fuselage-duct rakes

Tube No. \ α	3.98	8.15	16.51	24.86	26.94	28.95	33.00
401 T.H.[a]	1.00	0.98	0.96	0.89	0.81	0.79	0.61
402 St.H.[b]	.11	.06	.04	.09	.06	.02	.11
403 T.H.	1.00	.98	.96	.89	.83	.79	.69
404	-	-	-	-	-	-	-
405 St.H.	.17	.13	.06	.09	.06	.02	.17
406 T.H.	1.00	.98	.96	.85	.79	.74	.61
407 T.H.	1.00	.98	.96	.85	.79	.72	.61
408 St.H.	.19	.15	.11	.13	.11	.02	-.11
409 T.H.	1.00	.98	.96	.85	.81	.77	.64
410 T.H.	1.00	.98	.96	.91	.87	.83	.75
411 St.H.	.15	.11	.11	.06	0	-.04	-.19
412 T.H.	1.00	.98	.74	.85	.79	.72	.58
413 T.H.	1.00	.98	.74	.89	.87	.87	.64
414 St.H.	.04	-.02	-.02	-.30	-.36	-.49	-.83
415 T.H.	1.00	.98	.91	.72	.64	.55	.36
416 T.H.	1.00	.98	.91	.74	.11	.13	.06
417 St.H.	.06	-.19	-.15	-.36	-.45	-.47	-.50
418 T.H.	.98	.89	.89	.49	.36	0	-.42
501 T.H.	.79	.77	.62	.47	.40	.36	.22
502 St.H.	.74	.71	.60	.45	.38	.34	.19
503 T.H.	.81	.79	.64	.47	.43	.36	.22
504 T.H.	.83	.79	.64	.47	.43	.36	.22
505 St.H.	.74	.71	.57	.45	.38	.34	.19
506 T.H.	.81	.79	.62	.47	.43	.36	.22
507 T.H.	.79	.77	.64	.47	.43	.36	.22
508 St.H.	.74	.71	.54	.45	.38	.34	.19
509 T.H.	.83	.77	.64	.47	.43	.36	.22
510 T.H.	.85	.79	.64	.47	.40	.36	.19
511 St.H.	.74	.71	.51	.45	.38	.34	.19
512 T.H.	.89	.83	.66	.49	.43	.36	.22
513	-	-	-	-	-	-	-
514 St.H.	.74	.71	.53	.45	.38	.34	.19
515 T.H.	.94	.85	.68	.49	.43	.36	.22
516 T.H.	.91	.85	.68	.49	.43	.38	.22
517 St.H.	.74	.71	.53	.43	.38	.34	.19
518	-	-	-	-	-	-	-
519 T.H.	.89	.83	.68	.49	.43	.36	.22
520 St.H.	.74	.71	.53	.43	.38	.34	.19
521 T.H.	.81	.77	.62	.47	.40	.36	.22
522 St.H.	.74	.71	.53	.45	.38	.34	.19
523 T.H.	.74	.71	.57	.43	.38	.32	.19

[a]Total-head tube (coefficient given as P_t).

[b]Static-head tube (coefficient given as P_s).

TABLE 29.- PRESSURE COEFFICIENTS FOR THE FLYING MOCK-UP OF THE XP-92 AIRPLANE, $\beta = -10.06^{\circ}$, $\delta_e = -10^{\circ}$, $\delta_a = 0^{\circ}$, $\delta_r = -10^{\circ}$

(a) Wing

Orifice No. \ α	4.00	8.15	16.51	24.84	26.90	28.87	32.90
101	0	0.13	0.36	0.58	0.62	0.63	0.70
102	-.11	-.31	-.49	-.98	-1.28	-1.15	-1.08
103	-	-	-	-	-	-	-
104	-	-	-	-	-	-	-
105	.08	.25	.45	.58	.60	.63	.65
106	-.21	-.42	-.94	-2.80	-2.13	-1.15	-1.05
107	.21	.35	.32	.19	.21	.31	.24
108	-.33	-.75	-1.92	-2.44	-2.13	-1.15	-1.03
109	-.06	.04	.23	.42	.47	.48	.54
110	-.06	-.15	-.32	-.71	-.96	-1.11	-.97
111	-.06	-.08	.32	.50	.53	.52	.57
112	-.17	-.27	-.51	-1.63	-1.53	-1.15	-1.03
113	.02	.19	.43	.56	.57	.58	.59
114	-.25	-.46	-1.00	-1.52	-1.36	-1.04	-.97
115	.17	.33	.36	.42	.38	.42	.35
116	-.33	-.77	-2.02	-1.36	-1.28	-1.00	-.97
117	-.19	-.11	.09	.23	.32	.29	.35
118	-.04	-.11	-.21	-.58	-.74	-.71	-.92
119	-.17	-.06	.11	.29	.32	.31	.41
120	-.06	-.13	-.32	-.77	-.96	-.83	-.95
121	-.13	0	.23	.42	.43	.02	.49
122	-.15	-.25	-.49	-1.25	-1.21	-.98	-.95
123	.04	.17	.38	.50	.51	.11	.54
124	-.23	-.42	-1.00	-1.08	-1.06	-.83	-.89
125	.08	.27	.45	.44	.47	.04	.41
126	-.31	-.71	-2.32	-1.00	-.98	-.77	-.86
127	-.21	-.17	-.02	.08	.11	.11	.14
128	-.04	-.08	-.15	-.58	-.60	-.65	-.76
129	-.21	-.15	0	.11	.13	.11	.16
130	-.04	-.06	-.28	-.75	-.85	-.77	-.84
131	-.23	-.15	.06	.17	.21	.21	.24
132	-.13	-.19	-.45	-.94	-.96	-.77	-.84
133	-.13	0	.21	.33	.36	.35	.41
134	-.19	-.35	-1.13	-.81	-.81	-.69	-.76
135	-.04	.17	.38	.44	.45	.44	.43
136	-.27	-.63	-.98	-.77	-.77	-.69	-.73
137	-.27	-.23	-.17	-.15	-.15	-.19	-.19
138	.13	.11	.09	-.23	-.32	-.54	-.70

TABLE 29.- CONTINUED

(a) Wing (Concluded)

Orifice No. \ α	4.00	8.15	16.51	24.84	26.90	28.87	32.90
139	-0.27	-0.21	-0.13	-0.11	-0.11	-0.17	-0.14
140	.17	.15	0	-.56	-.66	-.69	-.76
141	-.32	-.25	-.17	-.15	-.15	-.17	-.16
142	.17	.11	-.17	-.77	-.79	-.73	-.76
143	-.32	-.15	.04	0	.04	.02	.05
144	0	-.11	-.70	-.67	-.68	-.63	-.70
145	-.19	-.02	.06	.13	.15	.15	.16
146	-.06	-.29	-.62	-.65	-.64	-.63	-.70
147	-.42	-.40	-.36	-.38	-.40	-.48	-.51
148	.21	.21	.13	0	-.13	-.46	-.68
149	~~-.19~~	~~-.17~~	~~-.21~~	~~-.33~~	~~-.36~~	~~-.42~~	~~-.46~~
150	-.02	-.02	-.19	-.48	-.57	-.67	-.78
151	-.79	-.73	-.60	-.54	-.53	-.56	-.54
152	.42	.33	-.32	-.73	-.74	-.69	-.78
153	-.81	-.67	-.53	-.44	-.40	-.42	-.35
154	.15	-.04	-.60	-.65	-.66	-.63	-.70
155	-.31	-.08	.06	.17	.21	.19	.08
156	0	-.27	-.62	-.61	-.62	-.61	-.78
157	-.19	-.17	-.13	-.15	-.17	-.25	-.30
158	.13	.11	.11	-.15	-.28	-.50	-.68
159	-.21	-.17	-.13	-.19	-.21	-.27	-.30
160	.17	.15	.04	-.52	-.64	-.67	-.76
161	-.25	-.21	-.17	-.21	-.23	-.27	-.27
162	.13	.11	-.36	-.71	-.72	-.67	-.73
163	-.31	-.21	-.15	-.13	-.11	-.15	-.14
164	.06	-.04	-.51	-.61	-.62	-.58	-.70
165	-.38	-.19	-.04	0	.04	.02	.03
166	-.02	-.21	-.49	-.61	-.60	-.61	-.70
167	.06	.06	.11	0	-.09	-.29	-.49
168	.11	.13	.15	0	-.11	-.40	-.65
169	.06	.06	.04	-.27	-.38	-.50	-.59
170	.13	.11	.11	-.40	-.53	-.65	-.73
171	.02	.04	-.15	-.40	-.43	-.46	-.51
172	.08	.08	-.26	-.58	-.62	-.63	-.73
173	.04	.06	-.11	-.23	-.26	-.29	-.11
174	.11	.06	-.32	-.52	-.49	-.54	-.68
175	-.11	-.04	-.15	-.29	-.32	-.35	-.43
176	.06	0	-.36	-.63	-.53	-.56	-.68

Note; A line has been drawn through the pressure coefficients for which the data are doubtful.

TABLE 29.– CONTINUED

(b) Vertical tail

Orifice No. \ α	4.00	8.15	16.51	24.84	26.90	28.87	32.90
201	-1.18	-1.02	-0.85	-0.94	-0.96	-0.74	-0.55
202	.10	.04	0	.06	.02	-.45	-1.39
203	-.61	-.53	-.53	-.67	-.72	-.72	-.55
204	~~.18~~	~~.18~~	~~.19~~	~~.13~~	~~.11~~	~~0~~	~~-.11~~
205	-.37	-.37	-.43	-.54	-.57	-.64	-.55
206	~~-.08~~	~~.10~~	~~.15~~	~~.15~~	~~.15~~	~~.09~~	~~.03~~
207	-.35	-.35	-.40	-.52	-.57	-.64	-.55
208	.20	.10	-.21	-.71	-.79	-.74	-1.00
209	-1.06	-1.02	-1.17	-1.56	-1.38	-1.23	-.82
210	.14	.08	-.06	-.21	-.21	-.23	-.74
211	-.51	-.51	-.57	-.77	-.83	-.87	-.79
212	.16	.12	.04	-.08	-.13	-.40	-.82
213	-.33	-.37	-.53	-.67	-.74	-.81	-.79
214	.10	.10	.04	-.15	-.21	-.64	-.87
215	-.24	-.27	-.36	-.56	-.62	-.68	-.68
216	~~-.08~~	~~.04~~	~~-.15~~	~~-.56~~	~~-.57~~	~~-.68~~	~~-.84~~
217	-1.20	-1.61	-1.38	-1.77	-2.13	-2.68	-1.34
218	.16	.10	.02	-.11	-.11	-.17	-.47
219	-.31	-.31	-.40	-.58	-.64	-.77	-.82
220	.08	.04	0	-.17	-.21	-.38	-.71
221	-.20	-.24	-.40	-.54	-.62	-.74	-.79
222	0	0	-.06	-.29	-.38	-.66	-.79
223	-.20	-.27	-.36	-.54	-.64	-.74	-.79
224	-.02	-.06	-.15	-.54	-.38	-.57	-.74
225	-.55	-.45	-.32	-.48	-.60	-.79	-.74
226	-.06	-.10	-.11	-.21	-.21	-.30	-.42
227	.10	.08	.11	0	-.04	-.21	-.53
228	-.16	-.18	-.21	-.33	-.40	-.51	-.66

Note: Lines have been drawn through the pressure coefficients for which the data are doubtful.

TABLE 29.- CONTINUED

(b) Vertical tail (Concluded)

Orifice No. \ α	4.00	8.15	16.51	24.84	26.90	28.87	32.90
229	~~0.10~~	~~0.10~~	~~0.15~~	~~0.15~~	~~0.15~~	~~0.09~~	~~0.03~~
230	-.20	-.20	-.26	-.44	-.53	-.66	-.71
231	.14	.14	.11	0	-.04	-.19	-.37
232	-.14	-.12	-.17	-.40	-.51	-.77	-.66
233	-.24	-.20	-.19	-.31	-.38	-.74	-.63
234	-.10	-.10	-.15	-.21	-.21	-.34	-.47
235	.18	.14	-.04	-.17	-.13	-.19	-.58
236	-.33	-.37	-.45	-.52	-.55	-.66	-.61
237	.24	.24	.21	.15	.11	-.04	-.37
238	-.22	-.22	-.28	-.46	-.53	-.66	-.71
239	.24	.27	.21	.15	.11	-.04	-.26
240	-.27	-.24	-.26	-.44	-.53	-.51	-.63
241	-.16	-.14	-.15	-.27	-.32	-.68	-.61
242	-.08	-.10	-.15	-.21	-.23	-.34	-.45
243	.14	.10	0	-.11	-.11	-.19	-.53
244	-.16	-.20	-.26	-.35	-.38	-.45	-.55
245	.16	.18	.13	.04	0	-.15	-.45
246	-.08	-.08	-.11	-.27	-.32	-.51	-.66
247	.22	.24	.21	.11	.04	-.11	-.34
248	-.08	-.08	-.11	-.25	-.32	-.43	-.63
249	-.10	-.08	-.13	-.23	-.28	-.43	-.55
250	-.10	-.12	-.17	-.25	-.28	-.40	-.50
251	.10	.10	.11	.02	-.02	-.15	-.47
252	.08	.08	.04	-.02	-.06	-.21	-.53
253	.10	.10	.09	0	-.06	-.26	-.53
254	.10	.10	.06	-.04	-.11	-.32	-.61
255	.16	.18	.15	0	-.06	-.26	-.53
256	.10	.10	.09	-.04	-.11	-.34	-.61

Note: A line has been drawn through the pressure coefficients for which the data are doubtful.

TABLE 29.– CONTINUED

(c) Fuselage

Orifice No. \ α	4.00	8.15	16.51	24.84	26.90	28.87	32.90
301	0.06	-0.04	-0.24	-1.02	-1.11	-1.15	-1.16
302	.31	.16	-.12	-.54	-.64	-.68	-.87
303	.49	.45	.24	-.04	-.15	-.19	-.39
304	.49	.57	.65	.75	.77	.77	.74
305	.27	.35	.49	.65	.68	.70	.74
306	.02	.04	.02	-.08	-.11	-.15	-.21
307	0	-.04	-.22	-.52	-.60	-.66	-.71
308	0	-.10	-.43	-1.06	-1.06	-1.09	-.97
309	-.06	-.08	-.14	-.21	-.21	-.23	-.26
310	.08	-.02	-.27	-.61	-.68	-.77	-.95
311	.24	.18	-.04	-.40	-.51	-.57	-.82
312	.29	.35	.41	.46	.45	.45	.42
313	.04	.08	.18	.29	.30	.32	.34
314	-.04	-.08	-.20	-.44	-.51	-.57	-.68
315	-.04	-.08	-.24	-.58	-.68	-.77	-.95
316	-.02	-.06	-.14	-.27	-.34	-.36	-.45
317	.06	-.04	-.27	-.61	-.70	-.79	-.95
318	.16	.10	-.06	-.35	-.47	-.53	-.74
319	.16	.20	.29	.33	.30	.32	.29
320	0	.08	.22	.42	.47	.51	.61
321	-.12	-.16	-.22	-.40	-.45	-.51	-.58
322	-.12	-.18	-.33	-.67	-.74	-.85	-.97
323	-.12	-.12	-.18	-.33	-.38	-.43	-.50
324	-.08	-.14	-.31	-.50	-.57	-.60	-.63
325	-.08	0	.12	.33	.38	.40	.24
326	-.08	-.22	-.33	-.50	-.57	-.64	-.71
327	-.43	-.49	-.55	-.61	-.62	-.64	-.61
328	-.16	-.29	-.51	-.85	-.94	-1.02	-.92
329	-.08	-.04	.06	.23	.28	.30	.34
330	-.08	-.12	-.24	-.44	-.51	-.57	-.66
331	-.10	-.12	-.16	-.21	-.23	-.26	-.37
332	.02	-.02	-.10	-.50	-.81	-1.04	-.97
333	-.27	-.20	-.04	.13	.15	.17	.21
334	-.14	-.08	.06	.21	.23	.26	.26

Note: A line has been drawn through the pressure coefficients for which the data are doubtful.

TABLE 29.- CONTINUED

(c) Fuselage (Concluded)

Orifice No. \ α	4.00	8.15	16.51	24.84	26.90	28.87	32.90
335	0	-0.04	-0.10	-0.56	-0.83	-0.87	-0.79
336	0	0	-.06	-.50	-.57	-.74	-.74
337	-.24	-.20	-.10	0	.02	.04	.05
338	-.16	-.10	0	.11	.13	.13	.16
339	-.04	-.04	-.08	-.33	-.45	-.64	-.71
340	.06	.06	.04	.04	.04	.04	-.08
341	-.14	-.12	-.06	0	0	0	-.03
342	-.10	-.08	-.02	.04	.04	.02	0
343	.04	.02	-.04	-.06	-.09	-.15	-.34
344	.06	.06	.02	-.06	-.11	-.21	-.39
345	-.12	-.12	-.08	-.11	-.11	-.15	-.21
346	-.12	-.08	-.04	-.02	-.02	-.06	-.11
347	-.12	-.10	-.06	0	0	-.02	-.05
348	-.08	-.06	-.02	0	0	-.02	-.05
349	-.10	-.08	-.04	-.02	-.02	-.04	-.08
350	.04	.04	.04	-.02	-.04	-.15	-.53
351	0	0	0	-.02	-.06	-.19	-.63
352	.06	.06	.08	.04	.02	-.11	-.32
353	-.06	-.06	-.06	-.04	-.06	-.09	-.16
354	.04	.04	0	-.02	-.02	-.09	-.26
355	.04	.04	.04	.02	.02	-.04	-.18
356	.10	.10	.08	.02	0	-.11	-.37
357	.08	.08	.06	-.02	-.04	-.15	-.53
358	.33	.31	.27	.19	.17	-.11	-.02
359	-.02	0	0	0	-.02	-.06	-.18
360	-.04	-.04	-.06	-.08	-.11	-.21	-.45
361	-.27	-.27	-.27	-.27	-.28	-.30	-.37
362	-.14	-.16	-.16	-.15	-.15	-.26	-.37
363	-.06	-.06	-.06	-.08	-.09	-.17	-.29
364	.06	.06	.06	-.02	-.04	-.11	-.26
365	.12	.12	.10	.06	.06	-.02	-.13
366	0	-.06	-.16	-.42	-.66	-1.21	-1.03
367	-.04	0	.14	.29	.17	.34	.37
368	-.12	-.04	.08	.27	.06	.32	.34
369	.04	.08	.12	.15	.15	.11	.08
370	.04	.08	.12	.15	.15	.11	.08
371	.08	.10	.14	.15	.15	.11	.03
372	.08	.10	.14	.15	.15	.11	.03

Note: Lines have been drawn through the pressure coefficients for which the data are doubtful.

TABLE 29.– CONCLUDED

(d) Fuselage-duct rakes

Tube No. \ α	4.00	8.15	16.51	24.84	26.90	28.87	32.90
401 T.H.[a]	0.88	0.86	0.85	0.75	0.70	0.62	0.46
402 St.H.[b]	-.22	-.27	-.13	-.46	-.51	-.74	-1.00
403 T.H.	.94	.92	.85	.73	.68	.62	.46
404	-	-	-	-	-	-	-
405 St.H.	.02	.02	-.02	-.08	-.11	-.26	-.73
406 T.H.	.98	.96	.89	.75	.68	.62	.46
407 T.H.	.98	.96	.94	.79	.74	.66	.51
408 St.H.	.12	.12	.13	.08	.06	-.04	-.19
409 T.H.	.98	.96	.94	.81	.74	.68	.54
410 T.H.	.98	.96	.94	.83	.79	.72	.62
411 St.H.	.10	.10	.04	-.02	-.06	-.15	-.65
412 T.H.	.98	.96	.89	.75	.68	.62	.43
413 T.H.	.98	.98	.94	.75	.58	.38	.38
414 St.H.	.06	-.08	-.17	-.44	-.57	-.81	-1.14
415 T.H.	.96	.96	.87	.65	.56	.43	.03
416 T.H.	.96	.92	.70	.33	.46	.19	-.43
417 St.H.	-.10	-.18	-.38	-.56	-.83	-.77	-.73
418 T.H.	.96	.92	.68	.42	.42	.09	-.57
501 T.H.	.71	.69	.62	.44	.42	.32	.19
502 St.H.	.67	.63	.55	.40	.36	.28	.16
503 T.H.	.73	.71	.62	.44	.42	.32	.19
504 T.H.	.73	.71	.62	.44	.42	.32	.19
505 St.H.	.67	.63	.55	.40	.36	.28	.14
506 T.H.	.73	.69	.60	.44	.42	.32	.19
507 T.H.	.69	.65	.60	.44	.42	.32	.19
508 St.H.	.65	.63	.55	.40	.36	.28	.14
509 T.H.	.71	.65	.57	.44	.42	.32	.24
510 T.H.	.82	.80	.64	.48	.44	.34	.19
511 St.H.	.67	.63	.55	.42	.36	.28	.14
512 T.H.	.90	.86	.68	.50	.46	.36	.22
513	-	-	-	-	-	-	-
514 St.H.	.67	.63	.55	.40	.36	.28	.14
515 T.H.	.86	.84	.70	.52	.48	.38	.24
516 T.H.	.80	.80	.70	.52	.46	.38	.24
517 St.H.	.65	.63	.55	.40	.36	.28	.14
518	-	-	-	-	-	-	-
519 T.H.	.90	.86	.72	.52	.46	.38	.22
520 St.H.	.67	.63	.53	.40	.36	.28	.14
521 T.H.	.78	.71	.62	.46	.44	.32	.18
522 St.H.	.65	.63	.53	.40	.36	.28	.14
523 T.H.	.69	.61	.53	.39	.34	.28	.14

[a]Total head tube (coefficient given as P_t).

[b]Static head tube (coefficient given as P_s).

TABLE 30.– PRESSURE COEFFICIENTS FOR THE FLYING MOCK-UP OF THE XP-92 AIRPLANE, $\beta = 9.98^{\circ}$, $\delta_e = -10^{\circ}$, $\delta_a = 0^{\circ}$, $\delta_r = -10^{\circ}$

(a) Wing

Orifice No. \ α	4.00	8.15	16.51	24.84	26.90	28.87	32.90
101	0.02	0.26	0.35	0.53	0.55	0.60	0.66
102	-.13	-.02	-.48	-.83	-.98	-1.17	-1.37
103	–	–	–	–	–	–	–
104	–	–	–	–	–	–	–
105	.04	.13	.22	.20	.23	.23	.24
106	-.20	-.38	-.65	-3.96	-3.27	-2.98	-2.55
107	.09	.11	-.16	-.48	-.52	-.51	-.58
108	-.30	-.70	-3.04	-3.06	-2.75	-2.53	-2.21
109	-.02	.04	.16	.13	.30	.32	.37
110	-.22	-.30	-.50	-.74	-.74	-.77	-.89
111	-.02	.06	.24	.37	.38	.45	.47
112	-.22	-.34	-.57	-1.26	-1.51	-1.62	-1.61
113	0	.09	.18	.24	.24	.26	.24
114	-.26	-.47	-2.72	-2.31	-1.96	-1.79	-1.66
115	.04	.06	-.06	-.18	-.19	-.26	-.26
116	-.37	-.79	-2.11	-1.80	-1.64	-1.49	-1.45
117	-.18	-.13	0	.13	.15	.17	.24
118	-.24	-.30	-.50	-.65	-.66	-.70	-.74
119	-.11	-.02	.16	.30	.34	.36	.42
120	-.24	-.30	-.50	-.83	-.83	-.94	-1.00
121	-.28	.02	.22	.33	.34	.36	.39
122	-.24	-.32	-.41	-1.33	-1.34	-1.49	-1.34
123	-.02	.02	.11	.15	.15	.17	.16
124	-.26	-.45	-2.52	-1.59	-1.40	-1.36	-1.32
125	0	.02	.04	-.04	-.04	-.06	-.11
126	-.35	-.81	-1.41	-1.33	-1.21	-1.19	-1.16
127	-.18	-.13	-.04	.04	.06	.09	.11
128	-.20	-.23	-.35	-.52	-.55	-.62	-.74
129	-.13	-.06	.04	.16	.19	.19	.24
130	-.13	-.21	-.35	-.61	-.70	-.77	-.87
131	-.13	-.06	.04	.16	.15	.17	.18
132	-.18	-.23	-.41	-1.11	-1.09	-1.09	-1.08
133	-.07	0	.11	.16	.15	.15	.16
134	-.20	-.32	-1.22	-1.13	-1.04	-1.02	-1.03
135	-.02	.09	.11	.09	.06	.06	.03
136	-.24	-1.06	-.85	-.91	-.87	-.85	-.92
137	-.24	-.21	-.13	-.07	-.06	-.06	-.08
138	-.13	-.17	0	-.11	-.17	-.23	-.39

TABLE 30.- CONTINUED

(a) Wing (Concluded)

Orifice No. \ α	4.00	8.15	16.51	24.84	26.90	28.87	32.90
139	-0.22	-0.19	-0.11	-0.04	-0.04	-0.04	-0.05
140	.11	.09	0	-.20	-.34	-.66	-.63
141	-.28	-.19	-.16	-.13	-.11	-.11	-.11
142	.13	.09	-.07	-.67	-.77	-.85	-.89
143	-.20	-.15	-.11	-.07	-.06	-.06	-.05
144	.04	-.02	-.70	-.78	-.81	-.85	-.87
145	-.18	-.32	-.04	-.02	-.02	-.02	-.05
146	0	-.64	-.50	-.63	-.68	-.72	-.82
147	-.46	-.43	-.35	-.28	-.28	-.30	-.29
148	.16	.19	.20	.13	.09	.04	-.16
149	~~-.18~~	~~-.17~~	~~-.18~~	~~-.24~~	~~-.28~~	~~-.30~~	~~-.37~~
150	-.09	-.30	-.09	-.33	-.36	-.40	-.55
151	-.70	-.68	-.59	-.46	-.45	-.45	-.45
152	.35	.30	.07	-.72	-.74	-.79	-.87
153	-.67	-.60	-.54	-.41	-.40	-.40	-.37
154	.16	-.26	-.52	-.70	-.72	-.77	-.84
155	-.22	-.30	-.39	-.24	-.23	-.26	-.24
156	-.02	-.28	-.41	-.61	-.64	-.72	-.82
157	-.18	-.17	-.11	-.07	-.06	-.09	-.11
158	.09	.06	.04	-.02	-.06	-.13	-.29
159	-.18	-.17	-.11	-.09	-.11	-.13	-.16
160	.16	.13	.04	-.11	-.26	-.40	-.58
161	-.20	-.19	-.15	-.20	-.19	-.21	-.21
162	.13	.11	-.15	-.74	-.81	-.81	-.87
163	-.20	-.17	-.17	-.20	-.19	-.21	-.21
164	.04	.04	-.54	-.67	-.68	-.70	-.76
165	-.22	-.13	-.07	-.13	-.13	-.13	-.16
166	-.04	-.19	-.37	-.54	-.57	-.62	-.68
167	.07	.06	.09	.09	.09	.04	-.03
168	.11	.11	.13	.11	.09	.04	-.08
169	.07	.06	.04	0	-.06	-.17	-.29
170	.13	.13	.09	0	-.13	-.23	-.42
171	.04	.04	-.04	-.37	-.40	-.45	-.50
172	.09	.09	-.11	-.59	-.62	-.68	-.76
173	.09	.06	-.16	-.28	-.30	-.34	-.39
174	.09	-.04	-.30	-.50	-.55	-.62	-.68
175	-.02	-.04	-.18	-.30	-.34	-.38	-.45
176	.09	.06	-.20	-.41	-.47	-.53	-.63

Note: A line has been drawn through the pressure coefficients for which the data are doubtful.

TABLE 30.– CONTINUED

(b) Vertical tail

Orifice No. \ α	4.00	8.15	16.51	24.84	26.90	28.87	32.90
201	-0.02	-0.06	-0.11	-0.02	.0	-0.06	-1.45
202	-1.30	-1.13	-.91	-.91	-.89	-.91	-.53
203	.22	.15	.09	-.13	-.20	-.21	-1.21
204	~~.04~~	~~.06~~	~~.09~~	~~.04~~	~~.04~~	~~0~~	~~-.08~~
205	.24	.19	-.13	-.78	-.76	-.60	-1.08
206	~~.07~~	~~.09~~	~~.13~~	~~-.13~~	~~.13~~	~~.11~~	~~.03~~
207	.21	.15	-.17	-.70	-.74	-.60	-1.03
208	-.40	-.43	-.49	-.59	-.63	-.66	-.61
209	.11	.04	-.11	-.22	-.24	-.21	-.71
210	-1.21	-1.21	-1.60	-1.44	-1.33	-1.32	-.97
211	.19	.13	.06	-.09	-.13	-.21	-.82
212	-.60	-.64	-.74	-.87	-.87	-.91	-.87
213	.13	.09	.04	-.20	-.24	-.36	-.89
214	-.38	-.43	-.59	-.73	-.54	-.70	-.87
215	.17	.13	-.06	-.51	-.48	-.34	-.82
216	~~-.38~~	~~-.45~~	~~-.55~~	~~-.76~~	~~-.78~~	~~-.83~~	~~-.89~~
217	.13	.11	-.02	-.11	-.13	-.17	-.39
218	-2.45	-2.49	-1.89	-2.59	-2.87	-2.96	-1.71
219	.13	.11	.06	-.13	-.20	-.28	-.74
220	-.45	-.49	-.51	-.76	-.80	-.85	-.97
221	.06	.06	0	-.31	-.39	-.55	-.82
222	-.38	-.40	-.51	-.73	-.78	-.85	-.97
223	.06	.04	-.04	-.29	-.33	-.51	-.74
224	-.34	-.30	-.49	-.73	-.78	-.83	-.92
225	.26	.21	.15	.13	.09	.06	-.16
226	-.85	-.87	-.85	-.98	-1.07	-1.19	-1.16
227	.26	.26	.21	.13	.11	.04	-.55
228	-.40	-.43	-.40	-.62	-.70	-.77	-.89
229	~~.06~~	~~.09~~	~~.15~~	~~.13~~	~~.13~~	~~.11~~	~~.03~~
230	-.34	-.36	-.40	-.62	-.70	-.77	-.87
231	.23	.23	.17	-.04	-.11	-.26	-.63
232	-.21	-.23	-.30	-.51	-.57	-.64	-.82
233	.28	.23	.17	.13	.13	.11	-.08
234	-.68	-.77	-.81	-.93	-1.00	-.87	-1.05
235	.30	.30	.26	.22	.22	.19	-.29

Note: Lines have been drawn through the pressure coefficients for which the data are doubtful.

TABLE 30.- CONTINUED

(b) Vertical tail (Concluded)

Orifice No. \ α	4.00	8.15	16.51	24.84	26.90	28.87	32.90
236	-0.70	-0.85	-1.17	-1.11	-1.07	-1.00	-1.03
237	.36	.36	.34	.24	.20	.09	-.63
238	-.32	-.36	-.36	-.58	-.65	-.72	-.87
239	.32	.32	.23	.07	-.02	-.15	-.61
240	-.26	-.34	-.34	-.58	-.63	-.70	-.89
241	.11	-.02	.04	-.02	-.02	-.04	-.18
242	-.55	-.64	-.70	-.82	-.87	-.91	-.97
243	.17	.17	.15	.11	.09	.06	-.34
244	-.49	-.60	-.23	-.73	-.78	-.74	-.89
245	.23	.23	.21	.11	.04	-.06	-.66
246	-.17	-.17	-.19	-.36	-.41	-.49	-.74
247	.23	.23	.21	-.02	-.11	-.21	-.58
248	-.11	-.15	-.19	-.36	-.41	-.49	-.74
249	-.13	-.15	-.19	-.29	-.28	-.32	-.39
250	-.53	-.57	-.64	-.73	-.78	-.85	-.92
251	.06	.06	.06	-.02	-.04	-.11	-.45
252	-.06	-.06	-.06	-.18	-.22	-.28	-.58
253	.09	.11	.06	-.04	-.09	-.17	-.61
254	0	.02	0	-.11	-.16	-.21	-.61
255	.13	.13	.09	-.09	-.16	-.23	-.58
256	.02	.04	.02	-.13	-.20	-.26	-.58

TABLE 30.– CONTINUED

(c) Fuselage

Orifice No. \ α	4.00	8.15	16.51	24.84	26.90	28.87	32.90
301	0.07	-0.04	-0.30	-1.00	-1.09	-1.15	-1.18
302	-.02	-.13	-.30	-1.13	-1.20	-1.11	-1.03
303	-.04	-.11	-.28	-.61	-.70	-.72	-.79
304	.04	.06	.07	-.02	-.04	-.09	-.11
305	.22	.38	.57	.72	.70	.79	.84
306	~~.35~~	~~.42~~	~~.50~~	~~.50~~	~~.48~~	~~.51~~	~~.42~~
307	.50	.48	.33	.07	-.02	-.11	-.29
308	.26	.13	-.20	-.59	-.70	-.83	-1.00
309	-.02	-.04	-.26	-.39	-.41	-.45	-.50
310	-.04	-.08	-.16	-.26	-.30	-.34	-.42
311	-.07	-.11	-.28	-.59	-.67	-.79	-.95
312	-.07	-.08	-.18	-.35	-.39	-.43	-.53
313	.13	.23	.39	.59	.63	.66	.74
314	.28	.35	.39	.35	.33	.32	.24
315	.30	.27	.09	-.20	-.28	-.38	-.58
316	.16	.02	-.24	-.59	-.70	-.79	-.97
317	-.11	-.11	-.18	-.33	-.37	-.40	-.47
318	-.13	-.17	-.35	-.63	-.74	-.83	-.97
319	-.16	-.17	-.28	-.46	-.50	-.53	-.61
320	-.09	-.04	.04	.18	.22	.23	.29
321	.13	.21	.30	.35	.33	.34	.32
322	.18	.15	.02	-.22	-.35	-.38	-.55
323	.04	-.06	-.30	-.65	-.72	-.81	-.97
324	-.24	-.25	-.30	-.52	-.61	-.62	-.68
325	-.18	-.17	-.09	0	.02	.04	.11
326	0	.06	.16	.20	.20	.19	.21
327	-.41	-.46	-.54	-.59	-.59	-.57	-.58
328	-.04	-.08	-.28	-.59	-.63	-.66	-.74
329	-.09	-.02	.09	.26	.30	.34	.39
330	0	.08	.20	.24	.26	.28	.34
331	-.16	-.19	-.22	-.26	-.26	-.28	-.37
332	-.28	-.31	-.46	-.65	-.74	-.83	-1.03
333	-.26	-.19	-.04	.11	.16	.17	.21
334	-.18	-.08	.09	.26	.28	.32	.37
335	-.26	-.27	-.39	-.61	-.67	-.74	-.89
336	-.13	-.15	-.22	-.37	-.44	-.51	-.66

Note: A line has been drawn through the pressure coefficients for which the data are doubtful.

TABLE 30.– CONTINUED

(c) Fuselage (Concluded)

Orifice No. \ α	4.00	8.15	16.51	24.84	26.90	28.87	32.90
337	-0.28	-0.23	-0.11	0	0.02	0.04	0.05
338	-.24	-.19	-.04	.07	.11	.13	.13
339	-.18	-.19	-.20	-.37	-.39	-.45	-.61
340	~~-2.50~~	~~-2.40~~	~~-2.46~~	~~-2.46~~	~~-2.46~~	~~-2.41~~	~~-2.34~~
341	-.18	-.17	-.11	-.02	-.02	0	-.03
342	-.16	-.13	-.04	.02	.02	.02	-.05
343	.11	.11	.07	-.22	-.30	-.40	-.68
344	.18	.17	.13	-.22	-.35	-.49	-.76
345	-.16	-.15	-.11	-.09	-.09	-.11	-.13
346	-.11	-.11	-.07	-.02	-.02	-.04	-.08
347	-.16	-.11	-.07	-.02	0	0	-.05
348	-.09	-.06	0	.02	.02	0	-.11
349	-.11	-.08	-.04	-.02	-.02	-.04	-.16
350	0	-.02	0	-.11	-.13	-.19	-.37
351	-.02	-.04	0	-.04	-.04	-.09	-.18
352	-.04	-.06	-.09	-.13	-.16	-.17	-.32
353	.24	.21	.24	.24	.24	.21	.11
354	.11	.11	.11	.11	.09	.04	-.24
355	.07	.08	.07	.07	.02	-.04	-.47
356	.13	.13	.11	.02	.02	-.02	-.42
357	.07	.06	.04	-.04	-.07	-.11	-.39
358	~~.33~~	~~.31~~	~~.28~~	~~.18~~	~~.16~~	~~.09~~	~~-.03~~
359	-.07	-.08	-.09	-.13	-.13	-.17	-.26
360	-.11	-.13	-.16	-.22	-.22	-.26	-.37
361	-.26	-.27	-.28	-.30	-.30	-.32	-.39
362	-.07	-.06	-.04	-.09	-.13	-.19	-.53
363	.02	0	0	.02	-.02	-.06	-.21
364	.09	.08	.09	.04	0	-.02	-.13
365	.11	.08	.09	.07	.07	.04	-.05
366	-.22	-.27	-.39	-.74	-.91	-1.11	-1.32
367	-.04	.02	.22	.39	.44	.47	.53
368	-.13	-.06	.11	.26	.30	.34	.39
369	.04	.06	.13	.16	.16	.13	.11
370	.04	.06	.13	.16	.16	.13	.11
371	.07	.11	.16	.13	.13	.13	.03
372	.07	.11	.16	.13	.13	.13	.03

Note: Lines have been drawn through the pressure coefficients for which the data are doubtful.

TABLE 30.– CONCLUDED

(d) Fuselage-duct rakes

Tube No. \ α	4.00	8.15	16.51	24.84	26.90	28.87	32.90
401 T.H.[a]	0.98	0.98	0.93	0.70	0.61	0.52	0.41
402 St.H.[b]	.46	.46	.37	.28	.26	.21	.11
403 T.H.	.98	.98	.98	.84	.80	.75	.68
404	-	-	-	-	-	-	-
405 St.H.	.26	.26	.18	.11	.09	.04	-.11
406 T.H.	1.00	.98	.98	.84	.80	.75	.68
407 T.H.	.98	.98	.96	.82	.80	.73	.62
408 St.H.	.13	.16	.09	.07	.07	.02	-.11
409 T.H.	.98	.98	.96	.84	.82	.75	.65
410 T.H.	.98	.96	.93	.87	.84	.79	.70
411 St.H.	.09	.04	-.02	-.18	-.22	-.23	-.38
412 T.H.	.96	.96	.93	.89	.72	.65	.49
413 T.H.	.96	.96	.93	.70	.61	.48	.27
414 St.H.	-.02	-.07	-.20	-.39	-.44	-.50	-.86
415 T.H.	.96	.91	.84	.61	.54	.42	.14
416 T.H.	.96	.89	.67	.08	.13	.08	-.27
417 St.H.	-.16	-.24	-.50	-.67	-.67	-.63	-.68
418 T.H.	.93	.80	.56	.39	.28	-.20	-.59
501 T.H.	.63	.59	.56	.39	.35	.29	.14
502 St.H.	.63	.61	.50	.30	.33	.25	.11
503 T.H.	.65	.61	.56	.39	.35	.29	.14
504 T.H.	.65	.61	.56	.39	.35	.29	.14
505 St.H.	.63	.61	.50	.30	.33	.25	.11
506 T.H.	.63	.59	.54	.39	.35	.29	.14
507 T.H.	.63	.59	.54	.39	.37	.29	.16
508 St.H.	.61	.61	.50	.30	.33	.25	.11
509 T.H.	.72	.63	.56	.41	.37	.31	.16
510 T.H.	.65	.76	.52	.35	.33	.27	.08
511 St.H.	.61	.61	.52	.37	.33	.27	.11
512 T.H.	.65	.59	.52	.35	.33	.27	.11
513	-	-	-	-	-	-	-
514 St.H.	.61	.61	.52	.35	.33	.27	.11
515 T.H.	.67	.59	.52	.35	.33	.27	.11
516 T.H.	.67	.59	.52	.35	.33	.27	.11
517 St.H.	.63	.61	.50	.35	.33	.27	.11
518	-	-	-	-	-	-	-
519 T.H.	.67	.59	.52	.35	.33	.27	.08
520 St.H.	.63	.61	.50	.37	.33	.27	.11
521 T.H.	.63	.56	.52	.37	.30	.25	.11
522 St.H.	.61	.61	.50	.37	.33	.27	.11
523 T.H.	.61	.54	.50	.35	.30	.25	.08

[a]Total-head tube (coefficient given as P_t).

[b]Static-head tube (coefficient given as P_s).

TABLE 31.- PRESSURE COEFFICIENTS FOR THE FLYING MOCK-UP OF THE XP-92 AIRPLANE, $\beta = -10.06^{\circ}$, $\delta_e = -10^{\circ}$, $\delta_a = 0^{\circ}$, $\delta_r = -20^{\circ}$

(a) Wing

Orifice No. \ α	4.00	8.16	16.53	24.86	26.91	28.88	32.91
101	-0.02	0.13	0.35	0.58	0.63	0.64	0.69
102	-.11	-.19	-.50	-1.00	-1.23	-1.34	-1.03
103	---	---	---	---	---	---	---
104	---	---	---	---	---	---	---
105	.08	.23	.44	.58	.58	.62	.64
106	-.19	-.45	-.96	-2.61	-2.61	-1.36	-1.03
107	.21	.36	.30	.19	.19	.26	.26
108	-.31	-.79	-1.96	-2.32	-1.96	-1.34	-1.00
109	-.04	.02	.24	.42	.46	.49	.54
110	-.06	-.17	-.33	-.73	-.98	-1.17	-.95
111	-.04	.06	.30	.48	.52	.53	.56
112	-.15	-.30	-.54	-1.56	-1.54	-1.28	-.97
113	.04	.19	.41	.54	.56	.60	.59
114	-.23	-.49	-1.02	-1.42	-1.38	-1.19	-.95
115	.17	.34	.35	.40	.38	.40	.36
116	-.31	-.83	-2.09	-1.29	-1.29	-1.13	-.92
117	-.17	-.11	.06	.23	.27	.30	.33
118	-.04	-.13	-.24	-.63	-.73	-.72	-.90
119	-.15	-.09	.11	.27	.31	.34	.38
120	-.08	-.17	-.35	-.79	-.96	-.91	-.92
121	-.11	0	.24	.38	.42	.45	.49
122	-.15	-.28	-.52	-1.21	-1.23	-1.11	-.90
123	.06	.17	.39	.48	.48	.57	.51
124	-.23	-.47	-1.09	-1.04	-1.06	-.94	-1.08
125	.08	.28	.46	.44	.44	.47	.44
126	-.29	-.77	-2.44	-.96	-1.00	-.83	-1.08
127	-.19	-.17	-.04	.11	.11	.11	.13
128	-.06	-.13	-.22	-.61	-.61	-.66	-.74
129	-.19	-.15	0	.11	.13	.13	.15
130	-.04	-.11	-.33	-.77	-.85	-.83	-.79
131	-.21	-.13	.04	.17	.21	.21	.23
132	-.15	-.23	-.50	-.94	-.96	-.85	-.77
133	-.15	0	.22	.31	.33	.36	.38
134	-.19	-.40	-1.15	-.81	-.83	-.74	-.72
135	-.02	.19	.37	.42	.44	.45	.44
136	-.27	-.70	-1.02	-.77	-.77	-.70	-.69

TABLE 31.– CONTINUED

(a) Wing (Concluded)

Orifice No. \ α	4.00	8.16	16.53	24.86	26.91	28.88	32.91
137	-0.23	-0.21	-0.17	-0.15	-0.15	-0.17	-0.21
138	.11	.06	.02	-.27	-.33	-.53	-.59
139	-.23	-.21	-.15	-.13	-.13	-.15	-.15
140	-.15	.11	-.06	-.61	-.67	-.74	-.74
141	-.27	-.26	-.17	-.17	-.15	-.17	-.15
142	.13	.06	-.26	-.77	-.79	-.77	-.74
143	-.21	-.15	-.06	0	.04	-.02	.05
144	-.02	-.17	-.72	-.69	-.71	-.68	-.69
145	-.15	-.02	.04	.13	.15	.15	.15
146	-.06	-.36	-.65	-.65	-.67	-.68	-.69
147	-.40	-.40	-.35	-.40	-.40	-.47	-.49
148	.19	.21	-.02	-.04	-.13	-.43	-.69
149	~~.04~~	~~-.17~~	~~-.22~~	~~-.35~~	~~-.35~~	~~-.43~~	~~-.46~~
150	.04	0	-.19	-.50	-.56	-.70	-.77
151	-.73	-.70	-.59	-.56	-.52	-.57	-.54
152	.42	.32	-.39	-.73	-.77	-.74	-.77
153	-.75	-.64	-.50	-.44	-.38	-.43	-.31
154	.17	-.09	-.63	-.67	-.69	-.68	-.72
155	-.27	-.06	.06	.15	.19	.17	.08
156	-.02	-.32	-.65	-.64	-.63	-.68	-.77
157	-.17	-.17	-.13	-.17	-.19	-.26	-.05
158	.08	.04	.06	-.21	-.27	-.49	-.69
159	-.19	-.17	-.15	-.21	-.21	-.28	-.05
160	.17	.11	0	-.58	-.58	-.72	-.74
161	-.23	-.19	-.19	-.25	-.23	-.28	-.28
162	.13	.06	-.40	-.71	-.75	-.72	-.72
163	-.29	-.21	-.15	-.15	-.13	-.15	-.15
164	.04	-.06	-.54	-.64	-.63	-.64	-.69
165	-.33	-.17	-.04	0	.04	0	.03
166	-.02	-.28	-.52	-.64	-.63	.64	-.69
167	.06	.04	.06	-.04	-.11	-.28	-.49
168	.08	.09	.11	-.06	-.13	-.38	-.64
169	.06	.04	.02	-.31	-.40	-.53	-.56
170	.13	.11	.04	-.44	-.52	-.68	-.72
171	.04	.02	-.19	-.42	-.42	-.47	-.51
172	.08	.06	-.30	-.61	-.63	-.68	-.72
173	.06	.04	-.13	-.25	-.25	-.32	-.38
174	.11	.04	-.35	-.54	-.52	-.60	-.69
175	-.08	-.06	-.17	-.31	-.31	-.38	-.44
176	.06	-.02	-.41	-.67	-.52	-.60	-.69

Note: A line has been drawn through the pressure coefficients for which the data are doubtful.

TABLE 31.– CONTINUED

(b) Vertical tail

Orifice No. \ α	4.00	8.16	16.53	24.86	26.91	28.88	32.91
201	-1.13	-0.96	-0.79	-0.87	-0.94	-0.83	-0.62
202	.13	.06	0	.02	.02	-.28	-1.33
203	-.56	-.50	-.53	-.66	-.70	-.72	-.59
204	~~.17~~	~~.17~~	~~.17~~	~~.13~~	~~.11~~	~~.04~~	~~-.10~~
205	-.35	-.35	-.40	-.53	-.57	-.62	-.59
206	~~.08~~	~~.11~~	~~.13~~	~~.15~~	~~.13~~	~~.09~~	~~.03~~
207	-.33	-.33	-.38	-.53	-.57	-.62	-.62
208	.17	.06	-.21	-.72	-.79	-.64	-1.00
209	-.98	-.94	-1.19	-1.38	-1.32	-1.26	-.87
210	.15	.08	-.06	-.19	-.21	-.15	-.77
211	-.46	-.46	-.55	-.74	-.79	-.83	-.79
212	.13	.11	.02	-.11	-.15	-.28	-.82
213	-.31	-.33	-.49	-.66	-.70	-.77	-.79
214	.08	.04	0	-.19	-.23	-.53	-.85
215	-.23	-.25	-.34	-.53	-.60	-.66	-.69
216	~~.04~~	~~0~~	~~-.19~~	~~-.60~~	~~-.57~~	~~-.60~~	~~-.87~~
217	-.98	-.94	-1.21	-1.62	-1.92	-2.51	-1.08
218	.17	.11	.02	-.09	-.11	-.15	-.54
219	-.25	-.25	-.32	-.51	-.57	-.66	-.77
220	.02	0	-.06	-.19	-.21	-.32	-.74
221	-.17	-.19	-.32	-.49	-.55	-.64	-.77
222	-.06	-.08	-.13	-.34	-.40	-.60	-.77
223	-.19	-.21	-.30	-.51	-.55	-.66	-.74
224	-.08	-.11	-.19	-.38	-.38	-.53	-.72
225	-.08	-.15	-.09	-.23	-.31	-.49	-.59
226	-.21	-.23	-.28	-.36	-.38	-.43	-.54
227	.35	.27	.28	.21	.17	.09	-.51
228	-.38	-.42	-.47	-.62	-.66	-.70	-.69
229	~~.13~~	~~.11~~	~~.13~~	~~.15~~	~~.13~~	~~.11~~	~~.03~~
230	-.46	-.48	-.53	-.74	-.79	-.81	-.72
231	.25	.25	.21	.15	.11	.04	-.26
232	-.29	-.31	-.36	-.53	-.57	-.81	-.67
233	.02	.02	0	-.13	-.17	-.28	-.54
234	-.35	-.38	-.40	-.47	-.49	-.55	-.62
235	.35	.33	.19	.11	.11	.09	-.54

Note: Lines have been drawn through the pressure coefficients for which the data are doubtful.

TABLE 31.– CONTINUED

(b) Vertical tail (Concluded)

Orifice No. \ α	4.00	8.16	16.53	24.86	26.91	28.88	32.91
236	-0.52	-0.56	-0.68	-0.85	-0.89	-0.98	-0.72
237	.40	.46	.36	.36	.34	.28	-.36
238	-.56	-.56	-.62	-.85	-.91	-.91	-.72
239	.35	.42	.34	.32	.28	.21	-.13
240	-.52	-.54	-.55	-.60	-.66	-.57	-.64
241	0	0	-.04	-.15	-.17	-.28	-.51
242	-.27	-.27	-.30	-.38	-.40	-.47	-.59
243	.23	.23	.15	.09	-.06	.02	-.51
244	-.40	-.40	-.45	-.56	-.81	-.68	-.64
245	.31	.31	.28	.21	.19	.11	-.38
246	-.25	-.27	-.30	-.49	-.53	-.57	-.69
247	.33	.40	.34	.23	.19	.13	-.23
248	-.40	-.42	-.40	-.56	-.62	-.49	-.64
249	-.02	-.04	-.11	-.21	-.21	-.32	-.51
250	-.15	-.17	-.23	-.32	-.36	-.43	-.56
251	.08	.08	.11	.04	0	-.09	-.49
252	-.06	-.06	-.06	-.15	-.17	-.26	-.56
253	.13	.13	.11	0	-.04	-.15	-.54
254	.02	.02	0	-.15	-.17	-.32	-.67
255	.17	.21	.17	-.02	-.06	-.26	-.46
256	-.04	-.06	-.09	-.32	-.34	-.32	-.62

TABLE 31.--CONTINUED

(c) Fuselage

Orifice No.	4.00	8.16	16.53	24.86	26.91	28.88	32.91
301	0.04	-0.04	-0.26	-1.00	-1.08	-1.33	-0.96
302	.31	.19	-.13	-.52	-.63	-.69	-.72
303	.50	.44	.26	-.04	-.15	-.21	-.32
304	.50	.58	.68	.75	.75	.75	.62
305	.27	.35	.51	.65	.69	.71	.64
306	~~-.02~~	~~.04~~	~~.02~~	~~-.08~~	~~-.11~~	~~-.15~~	~~-.17~~
307	0	-.04	-.23	-.52	-.58	-.63	-.60
308	0	-.11	-.45	-1.04	-1.06	-1.04	-.83
309	-.06	-.08	-.15	-.21	-.21	-.21	-.21
310	.08	-.02	-.28	-.68	-.67	-.75	-.79
311	.25	.19	-.04	-.38	-.50	-.58	-.68
312	.29	.35	.43	.46	.44	.46	.36
313	.04	.11	.19	.27	.31	.33	.32
314	-.04	-.08	-.21	-.21	-.48	-.54	-.57
315	-.04	-.08	-.26	-.56	-.67	-.75	-.79
316	-.04	-.04	-.15	-.27	-.31	-.33	-.36
317	.06	-.04	-.28	-.61	-.69	-.77	-.79
318	.17	.11	-.06	-.35	-.46	-.54	-.62
319	.17	.23	.28	.31	.31	.33	.28
320	0	.08	.23	.42	.46	.52	.49
321	-.13	-.15	-.23	-.40	-.44	-.48	-.49
322	-.13	-.19	-.36	-.65	-.73	-.81	-.83
323	-.13	-.13	-.19	-.31	-.35	-.40	-.40
324	-.13	-.15	-.32	-.50	-.56	-.58	-.53
325	-.13	0	.15	.31	.38	.42	.43
326	-.21	-.23	-.34	-.50	-.56	-.61	-.60
327	-.23	-.48	-.55	-.61	-.58	-.58	-.51
328	-.17	-.27	-.53	-.83	-.92	-.98	-.74
329	-.08	-.04	.09	.23	.25	.29	.30
330	-.08	-.13	-.23	-.44	-.48	-.54	-.55
331	-.08	-.13	-.17	-.21	-.21	-.19	-.30
332	0	-.04	-.15	-.46	-.67	-.98	-.77
333	-.27	-.21	-.04	.13	.15	.17	.19
334	-.15	-.08	.06	.21	.25	.27	.23
335	-.04	-.08	-.15	-.56	-.31	-.35	-.64
336	-.04	-.08	-.13	-.54	-.56	-.73	-.60

Note: A line has been drawn through the pressure coefficients for which the data are doubtful.

TABLE 31.- CONTINUED

(c) Fuselage (Concluded)

Orifice No. \ α	4.00	8.16	16.53	24.86	26.91	28.88	32.91
337	-0.25	-0.21	-0.11	0	0.02	0.04	0.06
338	-.15	-.11	0	.11	.13	.15	.13
339	-.15	-.15	-.19	-.38	-.46	-.63	-.57
340	~~.11~~	~~.11~~	~~.09~~	~~.08~~	~~.08~~	~~.11~~	~~0~~
341	-.15	-.13	-.06	0	0	0	0
342	-.08	-.08	-.02	.04	.04	.04	.02
343	.08	.08	.02	0	-.02	-.06	-.21
344	.13	.15	.13	.04	0	-.06	-.28
345	-.13	-.13	-.09	-.11	-.11	-.19	-.19
346	-.11	-.08	-.04	-.02	-.02	-.08	-.11
347	-.11	-.11	-.04	0	0	0	-.04
348	-.06	-.06	-.02	0	0	0	-.04
349	-.11	-.08	-.04	-.02	-.02	-.02	-.06
340	-.02	-.02	-.04	-.04	-.08	-.25	-.47
351	-.02	-.04	-.02	-.06	-.11	-.27	-.57
352	.04	.06	.06	.02	-.02	-.15	-.30
353	-.04	-.06	-.04	-.04	-.04	-.04	-.15
354	.04	.04	.04	.02	0	-.06	-.21
355	.04	.04	.06	.04	.04	-.04	-.17
356	.11	.08	.06	.04	.02	-.11	-.36
357	.04	.04	0	-.04	-.08	-.23	-.47
358	~~.31~~	~~.31~~	~~.28~~	~~.19~~	~~.17~~	~~.11~~	~~-.02~~
359	-.02	-.02	-.02	-.02	-.04	-.13	-.30
360	-.06	-.06	-.09	-.11	-.15	-.29	-.45
361	-.25	-.27	-.28	-.25	-.27	-.31	-.34
362	-.13	-.15	-.15	-.15	-.15	-.25	-.38
363	-.06	-.04	-.04	-.06	-.08	-.15	-.26
364	.06	.04	.04	.02	-.02	-.15	-.26
365	.11	.11	.09	.06	.02	-.08	-.19
366	0	-.06	-.19	-.40	-.61	-1.15	-.81
367	-.04	.02	.15	.29	.31	.35	.32
368	-.11	-.06	.11	.25	.29	.31	.30
369	.04	.08	.13	.15	.15	.13	.06
370	.04	.08	.13	.15	.15	.13	.06
371	.08	.11	.15	.15	.15	.11	.02
372	.08	.11	.15	.15	.15	.11	.02

Note: Lines have been drawn through the pressure coefficients for which the data are doubtful.

TABLE 31.- CONCLUDED

(d) Fuselage-duct rakes

Tube No. \ α	4.00	8.16	16.53	24.86	26.91	28.88	32.91
401 T.H.[a]	0.89	0.87	0.85	0.72	0.70	0.60	0.44
402 St.H.[b]	-.23	-.29	-.36	-.49	-.51	-.67	-1.03
403 T.H.	.96	.94	.85	.72	.70	.60	.44
404	- - -	- - -	- - -	- - -	- - -	- - -	- - -
405 St.H.	.04	.02	-.04	-.11	-.13	-.27	-.46
406 T.H.	.98	.96	.89	.74	.70	.60	.46
407 T.H.	.98	.98	.91	.77	.74	.67	.51
408 St.H.	.13	.13	.13	.06	.06	-.04	-.21
409 T.H.	.98	.98	.91	.79	.74	.67	.54
410 T.H.	.98	.98	.91	.83	.79	.71	.62
411 St.H.	.11	.11	.04	-.06	-.09	-.21	-.38
412 T.H.	.98	.96	.89	.72	.70	.60	.54
413 T.H.	.98	.98	.91	.72	.60	.31	.31
414 St.H.	.06	0	-.17	-.46	-.57	-.83	-1.15
415 T.H.	.98	.96	.85	.64	.55	.39	.03
416 T.H.	.98	.94	.70	.32	.59	.17	-.44
417 St.H.	-.11	-.19	-.38	-.58	-.62	-.75	-.74
418 T.H.	.96	.92	.68	.43	.53	.39	-.62
501 T.H.	.71	.69	.60	.43	.40	.29	.15
502 St.H.	.67	.65	.53	.38	.36	.27	.13
503 T.H.	.73	.73	.60	.43	.40	.29	.18
504 T.H.	.73	.73	.60	.43	.40	.29	.18
505 St.H.	.67	.65	.55	.38	.36	.27	.13
506 T.H.	.73	.71	.57	.43	.40	.29	.15
507 T.H.	.69	.67	.57	.43	.40	.29	.15
508 St.H.	.67	.63	.53	.38	.36	.25	.13
509 T.H.	.69	.67	.57	.43	.40	.29	.15
510 T.H.	.83	.81	.66	.45	.43	.31	.18
511 St.H.	.67	.65	.55	.38	.36	.25	.13
512 T.H.	.89	.87	.68	.49	.45	.33	.21
513	-	-	-	-	-	-	-
514 St.H.	.69	.65	.55	.38	.36	.27	.13
515 T.H.	.85	.87	.70	.51	.47	.35	.23
516 T.H.	.79	.77	.70	.51	.47	.35	.23
517 St.H.	.67	.63	.55	.38	.36	.25	.13
518	-	-	-	-	-	-	-
519 T.H.	.89	.85	.70	.51	.45	.35	.23
520 St.H.	.67	.63	.55	.38	.34	.25	.13
521 T.H.	.79	.73	.62	.43	.40	.29	.15
522 St.H.	.67	.63	.52	.38	.36	.25	.13
523 T.H.	.69	.62	.53	.38	.36	.25	.10

[a]Total-head tube (coefficient given as P_t).

[b]Static-head tube (coefficient given as P_s).

TABLE 32.– PRESSURE COEFFICIENTS FOR THE FLYING MOCK-UP OF THE XP-92 AIRPLANE, $\beta = 9.98^{\circ}$, $\delta_e = -10^{\circ}$, $\delta_a = 0^{\circ}$, $\delta_r = -20^{\circ}$

(a) Wing

Orifice No. \ α	4.00	8.16	16.53	24.86	26.91	28.88	32.91
101	0.04	0.12	0.34	0.53	0.54	0.60	0.63
102	-.13	-.22	-.49	-.85	-1.00	-1.24	-1.37
103	--	--	--	--	--	--	--
104	--	--	--	--	--	--	--
105	.04	.12	.19	.21	.22	.22	.21
106	-.19	-.37	-.66	-3.75	-3.12	-2.91	-2.55
107	.08	.10	-.17	-.49	-.50	-.56	-.61
108	-.31	-.65	-2.96	-3.00	-2.67	-2.51	-1.71
109	-.02	.04	.13	.28	.28	.31	.34
110	-.23	-.31	-.53	-.79	-.76	-.80	-.92
111	-.02	.06	.21	.36	.39	.31	.45
112	-.23	-.33	-.57	-1.32	-1.54	-1.64	-1.63
113	0	.08	.17	.21	.22	.22	.21
114	-.27	-.45	-2.80	-2.19	-1.91	-1.78	-1.71
115	.04	.06	-.09	-.19	-.20	-.22	-.29
116	-.38	-.78	-2.13	-1.77	-1.61	-1.49	-1.50
117	-.19	-.12	-.02	.11	.13	.18	.21
118	-.25	-.33	-.53	-.68	-.67	-.73	-.76
119	-.11	-.02	.13	.30	.33	.36	.39
120	-.27	-.33	-.53	-.85	-.87	-1.00	-1.03
121	-.27	.02	.17	.30	.33	.36	.39
122	-.25	-.33	-.45	-1.32	-1.35	-1.36	-1.37
123	-.02	.02	.09	.13	.13	.13	.13
124	-.27	-.45	-2.60	-1.35	-1.37	-1.36	-1.37
125	0	.02	.02	-.04	-.07	-.11	-.16
126	-.38	-.80	-1.47	-1.32	-1.17	-1.18	-1.18
127	-.17	-.14	-.06	.04	.04	.07	.08
128	-.23	-.27	-.40	-.57	-.63	-.69	-.76
129	-.13	-.08	.02	.15	.17	.18	.21
130	-.19	-.24	-.40	-.66	-.74	-.82	-.92
131	-.13	-.08	.04	.13	.13	.16	.18
132	-.19	-.27	-.45	-1.09	-1.07	-1.11	-1.13
133	-.08	0	.09	.13	.13	.13	.13
134	-.21	-.33	-1.26	-1.11	-1.02	-1.04	-1.08
135	0	.08	.09	.06	.04	.02	0
136	-.27	-1.12	-.87	-.91	-.89	-.91	-.92
137	-.23	-.20	-.15	-.11	-.11	-.11	-.11
138	.02	0	-.06	-.17	-.24	-.31	-.45

TABLE 32.– CONTINUED

(a) Wing (Concluded)

Orifice No. \ α	4.00	8.16	16.53	24.86	26.91	28.88	32.91
139	-0.21	-0.18	-0.13	-0.09	-0.09	-0.07	-0.08
140	.08	.06	-.06	-.28	-.41	-.53	-.66
141	-.25	-.22	-.17	-.15	-.16	-.16	-.13
142	.11	.06	-.11	-.72	-.80	-.87	-.92
143	-.19	-.14	-.13	-.11	-.11	-.11	-.08
144	.02	-.04	-.74	-.81	-.83	-.87	-.89
145	-.17	-.10	-.06	-.04	-.04	-.04	-.05
146	-.04	-.67	-.53	-.70	-.74	-.78	-.84
147	-.42	-.39	-.36	-.32	-.33	-.33	-.32
148	.13	.14	.15	.09	.07	0	-.18
149	~~-.17~~	~~-.14~~	~~-.19~~	~~-.28~~	~~-.30~~	~~-.33~~	~~-.39~~
150	.04	-.04	-.11	-.38	-.41	-.41	-.55
151	-.65	-.61	-.57	-.51	-.50	-.49	-.47
152	.35	.29	.06	-.74	-.76	-.82	-.89
153	-.63	-.55	-.53	-.47	-.46	-.44	-.39
154	.21	-.04	-.57	-.72	-.76	-.80	-.84
155	-.19	-.08	-.36	-.30	-.30	-.29	-.26
156	-.06	-.33	-.45	-.66	-.70	-.78	-.84
157	-.17	-.16	-.13	-.11	-.11	-.11	-.13
158	.04	.02	-.02	-.09	-.13	-.20	-.34
159	-.17	-.14	-.13	-.13	-.13	-.16	-.18
160	.13	.08	-.02	-.19	-.35	-.47	-.61
161	-.21	-.18	-.17	-.23	-.24	-.24	-.24
162	.11	.08	-.21	-.77	-.80	-.85	-.89
163	-.21	-.16	-.19	-.21	-.24	-.24	-.24
164	.02	.04	-.57	-.68	-.72	-.76	-.82
165	-.19	-.12	-.11	-.15	-.16	-.18	-.18
166	-.06	-.22	-.40	-.57	-.63	-.67	-.74
167	.04	.04	.06	.06	.04	0	-.06
168	.08	.06	.08	.06	.04	0	-.11
169	.06	.06	.04	-.06	-.13	-.20	-.32
170	.11	.10	.06	-.06	-.20	-.31	-.45
171	.04	.04	-.06	-.40	-.44	-.49	-.55
172	.08	.08	-.15	-.62	-.65	-.71	-.79
173	.11	.04	-.19	-.32	-.35	-.38	-.45
174	.08	-.08	-.34	-.55	-.61	-.64	-.71
175	-.02	-.04	-.19	-.36	-.39	-.42	-.47
176	.08	.04	-.23	-.47	-.54	-.60	-.66

Note: A line has been drawn through the pressure coefficients for which the data are doubtful.

TABLE 32.- CONTINUED

(b) Vertical tail

Orifice No. \ α	4.00	8.16	16.53	24.86	26.91	28.88	32.91
201	-0.04	-0.06	-0.13	0.06	0	-0.07	-1.39
202	-.33	-1.16	-1.00	-.91	-.93	-.87	-.61
203	.21	.16	.09	-.13	-.18	-.24	-1.18
204	~~.04~~	~~.06~~	~~.06~~	~~.04~~	~~.02~~	~~.02~~	~~-.08~~
205	.25	.18	-.13	-.72	-.74	-.62	-1.08
206	~~.06~~	~~.10~~	~~.15~~	~~.13~~	~~.13~~	~~.11~~	~~.03~~
207	.23	.16	-.15	-.70	-.72	-.62	-1.03
208	-.42	-.43	-.51	-.60	-.63	-.64	-.66
209	.11	.04	-.11	-.23	-.24	-.22	-.71
210	-1.29	-1.27	-1.89	-1.49	-1.40	-1.31	-1.03
211	.19	.14	.09	-.09	-.13	-.20	-.82
212	-.65	-.65	-.79	-.87	-.91	-.91	-.92
213	.15	.12	.06	-.17	-.24	-.33	-.87
214	-.44	-.45	-.62	-.74	-.78	-.82	-.89
215	.19	.14	-.02	-.49	-.51	-.36	-.82
216	~~-.42~~	~~-.47~~	~~-.60~~	~~-.77~~	~~-.82~~	~~-.85~~	~~-.92~~
217	.15	.10	-.02	-.13	-.13	-.18	-.34
218	-2.75	-2.73	-2.02	-2.68	-3.09	-3.07	-1.92
219	.17	.14	.11	-.09	-.13	-.22	-.76
220	-.52	-.55	-.57	-.79	-.85	-.89	-1.03
221	.11	.08	.06	-.28	-.36	-.49	-.84
222	-.46	-.45	-.57	-.77	-.85	-.91	-1.03
223	.11	.08	0	-.28	-.31	-.44	-.76
224	-.38	-.43	-.53	-.74	-.82	-.89	-.97
225	.35	.33	.23	.19	.20	.20	-.32
226	-.79	-.80	-.81	-.91	-.96	-1.04	-1.14
227	.41	.41	.38	.34	.31	.29	-.49
228	-.63	-.63	-.66	-.85	-.93	-1.00	-1.03
229	~~.06~~	~~.08~~	~~.15~~	~~.13~~	~~.13~~	~~.11~~	~~.02~~
230	-.58	-.61	-.62	-.89	-.98	-1.07	-1.11
231	.38	.37	.30	.13	.07	-.04	-.62
232	-.38	-.39	-.40	-.66	-.73	-.80	-.97
233	.40	.35	.26	.23	.24	.24	.08
234	-.69	-.75	-.87	-.91	-.96	-1.02	-1.05

Note: Lines have been drawn through the pressure coefficients for which the data are doubtful.

TABLE 32.- CONTINUED

(b) Vertical tail (Concluded)

Orifice No. \ α	4.00	8.16	16.53	24.86	26.91	28.88	32.91
235	0.48	0.47	0.43	0.43	0.44	0.42	-0.14
236	-.75	-.84	-1.19	-1.13	-1.09	-1.16	-1.05
237	.54	.55	.53	.49	.47	.40	-.59
238	-.61	-.61	-.60	-.87	-.96	-1.04	-1.14
239	.52	.51	.38	.23	.18	.07	-.62
240	-.44	-.47	-.45	.70	-.73	-.85	-1.19
241	.21	.18	.13	.08	.07	.07	-.05
242	-.67	-.67	-.77	-.83	-.87	-.91	-1.03
243	.27	.27	.26	.23	.22	.22	-.27
244	-.69	-.69	-.77	-.87	-.89	-.91	-1.03
245	.35	.37	.36	.28	.22	.16	-.65
246	-.38	-.39	-.38	-.60	-.69	-.76	-.89
247	.35	.35	.26	.09	0	-.07	-.62
248	-.35	-.41	-.43	-.68	-.76	-.82	-.97
249	-.08	-.10	-.17	-.23	-.24	-.24	-.30
250	-.67	-.67	-.74	-.81	-.82	-.89	-1.03
251	-.06	-.02	0	-.06	-.11	-.13	-.27
252	-.40	-.35	-.32	-.45	-.47	-.53	-.81
253	.06	.08	.06	-.04	-.11	-.18	-.65
254	-.19	-.16	-.17	-.32	-.40	-.47	-.68
255	.08	.08	.04	-.21	-.27	-.33	-.70
256	-.17	-.20	-.28	-.49	-.56	-.60	-.68

TABLE 32.– CONTINUED
(c) Fuselage

Orifice No. \ α	4.00	8.16	16.53	24.86	26.91	28.88	32.91
301	0.06	-0.04	-0.32	-1.00	-1.06	-1.13	-1.21
302	-.02	-.12	-.32	-1.13	-1.15	-1.11	-1.03
303	-.04	-.10	-.30	-.58	-.66	-.72	-.77
304	.04	.06	.06	-.02	-.04	-.07	-.10
305	.27	.37	.55	.71	.72	.78	.85
306	~~.35~~	~~.41~~	~~.49~~	~~.50~~	~~.47~~	~~.46~~	~~.41~~
307	.52	.49	.32	.04	-.02	-.11	-.28
308	.27	.12	-.19	-.61	-.68	-.78	-1.00
309	-.02	-.10	-.26	-.38	-.40	-.44	-.51
310	-.06	-.08	-.15	-.25	-.30	-.35	-.41
311	-.06	-.10	-.28	-.58	-.66	-.76	-.95
312	-.06	-.10	-.17	-.33	-.57	-.44	-.51
313	.15	.22	.40	.38	.60	.65	.72
314	.29	.35	.40	.35	.34	.30	.26
315	.29	.27	.11	-.19	-.28	-.39	-.56
316	.15	.04	-.26	-.58	-.68	-.78	-.97
317	-.11	-.12	-.17	-.31	-.34	-.39	-.46
318	-.13	-.18	-.36	-.65	-.70	-.80	-.97
319	-.15	-.18	-.28	-.44	-.47	-.54	-.62
320	-.11	-.04	.06	.19	.19	.24	.32
321	.15	.20	.30	.33	.32	.35	.33
322	.17	-.06	.04	-.23	-.28	-.39	-.54
323	.02	-.06	-.32	-.44	-.70	-.80	-.97
324	-.25	-.24	-.30	-.31	-.57	-.63	-.67
325	-.19	-.16	-.09	0	.02	.04	.10
326	0	.06	.15	.19	.19	.20	.21
327	-.44	-.47	-.55	-.56	-.55	-.59	-.59
328	-.02	-.08	-.23	-.56	-.62	-.67	-.69
329	-.08	-.04	.09	.27	.28	.35	.41
330	0	.08	.19	.25	.23	.26	.33
331	-.15	-.18	-.23	-.25	-.23	-.26	-.36
332	-.29	-.35	-.47	-.67	-.70	-.83	-1.00
333	-.25	-.20	-.04	.11	.15	.18	.23
334	-.17	-.08	-.08	.25	.30	.33	.36
335	-.29	-.33	-.43	-.63	-.63	-.73	-.90
336	-.19	-.20	-.26	-.42	-.47	-.59	-.72

Note: A line has been drawn through the pressure coefficient for which the data are doubtful.

TABLE 32.– CONTINUED

(c) Fuselage (Concluded)

Orifice No. \ α	4.00	8.16	16.53	24.86	26.91	28.88	32.91
337	-0.27	-0.22	-0.13	-0.02	0.02	0.04	0.04
338	-.23	-.16	-.04	.06	.11	.13	.15
339	-.27	-.27	-.38	-.44	-.47	-.52	-.64
340	~~2.36~~	~~2.36~~	~~2.38~~	~~2.38~~	~~2.36~~	~~2.36~~	~~2.87~~
341	-.17	-.16	-.11	-.04	-.02	-.02	-.02
342	-.15	-.12	-.04	0	.02	.02	-.04
343	.15	.14	.11	-.15	-.23	-.28	-.67
344	.25	.24	.19	-.15	-.26	-.37	-.77
345	-.17	-.14	-.13	-.11	-.11	-.13	-.15
346	-.15	-.10	-.06	-.04	-.04	-.07	-.10
347	-.15	-.12	-.06	-.04	-.02	-.02	-.05
348	-.08	-.06	0	.04	.02	0	-.10
349	-.11	-.08	-.02	0	0	-.02	-.15
350	-.04	-.06	-.02	-.17	-.19	-.24	-.38
351	-.04	-.04	-.04	-.08	-.09	-.13	-.21
352	-.08	-.10	-.11	-.19	-.21	-.24	-.33
353	.21	.22	.26	.25	.23	.24	.10
354	.08	.10	.13	.13	.11	.09	-.21
355	.08	.10	.09	.08	.04	0	-.44
356	.11	.12	.11	.02	0	0	-.38
357	.08	.06	.04	-.06	-.11	-.13	-.38
358	~~.31~~	~~.29~~	~~.15~~	~~.17~~	~~.13~~	~~.09~~	~~-.05~~
359	-.11	-.12	-.13	-.15	-.15	-.18	-.26
360	-.15	-.18	-.21	-.25	-.26	-.28	-.36
361	-.25	-.27	-.32	-.35	-.36	-.37	-.38
362	-.11	-.08	-.28	-.11	-.15	-.18	-.54
363	0	0	-.02	-.02	-.06	-.09	-.26
364	.06	.06	.06	0	-.04	-.07	-.15
365	.08	.08	.09	.06	.04	.04	-.05
366	-.23	-.29	-.40	-.75	-.89	-1.11	-1.32
367	-.06	.04	.21	.40	.43	.46	.50
368	-.15	-.06	.09	.25	.27	.39	.39
369	.02	.06	.13	.15	.15	.13	.08
370	.02	.06	.13	.15	.15	.13	.08
371	.06	.10	.15	.13	.11	.11	.02
372	.06	.10	.15	.13	.11	.11	.02

Note: A line has been drawn through the pressure coefficients for which the data are doubtful.

TABLE 32.– CONCLUDED

(d) Fuselage-duct rakes

Tube No. \ α	4.00	8.16	16.53	24.86	26.91	28.88	32.91
401 T. H.[a]	0.98	1.00	0.91	0.71	0.63	0.54	0.32
402 St. H.[b]	.46	.44	.36	.25	.24	.22	.10
403 T. H.	.98	1.00	.96	.85	.82	.76	.64
404	---	---	---	---	---	---	---
405 St. H.	.25	.23	.15	.08	.07	.04	-.10
406 T. H.	.98	1.00	.96	.85	.82	.78	.64
407 T. H.	.98	1.00	.96	.83	.80	.74	.59
408 St. H.	.13	.13	.09	.06	.04	.02	-.10
409 T. H.	.98	.98	.96	.85	.82	.76	.64
410 T. H.	.98	.98	.94	.83	.84	.80	.67
411 St. H.	.06	.04	-.04	-.85	-.87	-.22	-.36
412 T. H.	.96	.98	.91	.75	.72	.63	.46
413 T. H.	.96	.98	.91	.69	.61	.72	.26
414 St. H.	-.04	-.11	-.23	-.42	-.46	-.48	-.85
415 T. H.	.96	.94	.83	.60	.54	.43	.13
416 T. H.	.94	.89	.66	.06	.11	.13	-.28
417 St. H.	-.17	-.25	-.55	-.69	-.72	-.65	-.64
418 T. H.	.92	.81	.53	.29	.26	-.13	-.59
501 T. H.	.60	.60	.53	.39	.30	.28	.13
502 St. H.	.61	.58	.49	.33	.30	.26	.10
503 T. H.	.65	.62	.55	.37	.35	.28	.13
504 T. H.	.65	.62	.55	.37	.35	.28	.13
505 St. H.	.61	.56	.49	.33	.30	.26	.10
506 T. H.	.62	.60	.55	.35	.35	.30	.13
507 T. H.	.62	.60	.55	.37	.35	.30	.15
508 St. H.	.58	.56	.49	.33	.30	.26	.10
509 T. H.	.69	.65	.55	.39	.35	.30	.15
510 T. H.	.60	.56	.49	.33	.30	.26	.08
511 St. H.	.61	.58	.49	.35	.30	.26	.10
512 T. H.	.65	.60	.51	.33	.33	.26	.10
513	---	---	---	---	---	---	---
514 St. H.	.61	.58	.49	.33	.30	.26	.10
515 T. H.	.65	.60	.51	.33	.30	.26	.10
516 T. H.	.65	.60	.51	.33	.30	.26	.10
517 St. H.	.61	.58	.49	.33	.30	.26	.10
518	---	---	---	---	---	---	---
519 T. H.	.65	.58	.51	.33	.30	.26	.10
520 St. H.	.61	.56	.49	.33	.30	.26	.08
521 T. H.	.65	.58	.49	.32	.30	.26	.08
522 St. H.	.61	.56	.28	.33	.30	.26	.10
523 T. H.	.58	.56	.26	.32	.28	.24	.08

[a]Total-head tube (coefficient given as P_t).

[b]Static-head tube (coefficient given as P_s).

TABLE 33.– PRESSURE COEFFICIENTS FOR THE FLYING MOCK-UP OF THE XP-92 AIRPLANE, $\beta = -10.06^{\circ}$, $\delta_e = -10^{\circ}$, $\delta_a = 0^{\circ}$, $\delta_r = 10^{\circ}$

(a) Wing

Orifice No. \ α	4.07	8.17	16.52	24.86	26.92	28.91	32.74
101	0.02	0.13	0.38	0.61	0.65	0.66	0.69
102	-.09	-.19	-.47	-1.07	-1.28	-1.68	-1.17
103	--	--	--	--	--	--	--
104	--	--	--	--	--	--	--
105	.11	.26	.47	.59	.61	.60	.64
106	-.17	-.38	-.91	-2.44	-2.24	-1.77	-1.17
107	.19	.38	.34	.22	.20	.19	.22
108	-.26	-.72	-1.88	-2.24	-2.02	-1.70	-1.11
109	-.04	.06	.26	.44	.48	.49	.56
110	-.02	-.11	-.28	-.78	-1.00	-1.13	-1.03
111	-.04	.11	.32	.50	.50	.55	.61
112	-.11	-.23	-.47	-1.50	-1.59	-1.49	-1.08
113	.04	.21	.45	.57	.59	.60	.61
114	-.17	-.40	-.96	-1.37	-1.41	-1.34	-1.03
115	.17	.36	.40	.44	.39	.36	.36
116	-.26	-.72	-1.96	-1.24	-1.30	-1.28	-1.03
117	-.17	-.09	.09	.24	.28	.32	.36
118	.02	-.04	-.57	-.65	-.78	-.68	-.97
119	-.13	-.06	.13	.28	.33	.34	.39
120	0	-.06	-.26	-.83	-1.00	-1.00	-1.00
121	-.11	.02	.26	.39	.44	.47	.50
122	-.09	-.19	-.42	-1.17	-1.26	-1.26	-1.00
123	.06	.19	.40	.50	.52	.53	.56
124	-.17	-.36	-.92	-1.02	-1.09	-1.04	-.94
125	.09	.30	.46	.46	.46	.45	.44
126	-.23	-.64	-2.17	-.96	-1.02	-.94	-.92
127	-.19	-.13	0	.07	.11	.13	.14
128	.06	.02	-.06	-.54	-.59	-.60	-.78
129	-.17	-.11	.02	.11	.16	.15	.17
130	.06	.02	-.17	-.76	-.87	-.87	-.86
131	-.19	-.11	-.08	.18	.22	.23	.25
132	-.04	-.13	-.35	-.91	-.98	-.96	-.86
133	-.13	.02	.25	.30	.37	.38	.42
134	-.13	-.28	-1.06	-.78	-.85	-.79	-.81
135	-.02	.19	.40	.44	.46	.45	.44
136	-.19	-.55	-.94	-.74	-.80	-.72	-.75
137	-.21	-.19	-.13	-.13	-.11	-.11	-.19
138	.23	.21	.19	-.18	-.26	-.40	-.72

TABLE 33.– CONTINUED

(a) Wing (Concluded)

Orifice No. \ α	4.07	8.17	16.52	24.86	26.92	28.91	32.74
139	-0.21	-0.19	-0.11	-0.11	-0.11	-0.11	-0.14
140	.23	.23	.08	-.13	-.65	-.74	-.81
141	-.28	-.23	-.13	-.18	-.11	-.13	-.14
142	.21	.17	-.08	-.74	-.83	-.81	-.81
143	-.19	-.11	-.02	.02	.07	.06	.06
144	.04	-.06	-.63	-.63	-.67	-.64	-.72
145	-.15	0	.11	.13	.18	.17	.17
146	.02	-.21	-.56	-.59	-.65	-.62	-.69
147	-.36	-.34	-.29	-.37	-.37	-.38	-.50
148	.21	.13	.08	0	-.09	-.23	-.69
149	~~-.15~~	~~-.13~~	~~-.17~~	~~-.33~~	~~-.33~~	~~-.36~~	~~-.47~~
150	.02	.04	-.13	-.46	-.57	-.70	-.81
151	-.72	-.66	-.56	-.59	-.50	-.49	-.53
152	.45	.36	-.23	-.70	-.74	-.74	-.81
153	-.77	-.62	-.46	-.46	-.33	-.34	-.31
154	.19	.02	-.31	-.59	-.65	-.62	-.72
155	-.30	-.06	.08	.18	.22	.21	.08
156	.04	-.19	-.54	-.54	-.59	-.57	-.78
157	-.13	-.11	-.08	-.13	-.13	-.15	-.31
158	.23	.21	.23	-.11	-.18	-.30	-.69
159	-.15	-.13	-.08	-.18	-.18	-.21	-.28
160	.23	.23	.13	-.54	-.63	-.72	-.78
161	-.19	-.15	-.13	-.22	-.22	-.23	-.28
162	.17	.15	-.25	-.67	-.72	-.72	-.75
163	-.28	-.19	-.11	-.13	-.11	-.11	-.11
164	.11	0	-.40	-.54	-.59	-.57	-.69
165	-.34	-.17	0	.02	.07	.06	.03
166	.04	.15	-.38	-.57	-.59	-.57	-.67
167	.13	.13	.17	.04	.02	-.06	-.44
168	.17	.21	.25	.04	.02	.11	-.61
169	.11	.13	.11	-.28	-.37	-.47	-.61
170	.17	.17	.15	-.39	-.54	-.66	-.78
171	.06	.09	-.11	-.37	-.39	-.43	-.53
172	.13	.13	-.21	-.52	-.57	-.62	-.75
173	.09	.09	-.06	-.20	-.20	-.21	-.39
174	.13	.11	-.23	-.44	-.44	-.49	-.69
175	-.09	-.02	-.08	-.24	-.24	-.28	-.42
176	.09	.04	-.29	-.57	-.44	-.45	-.67

Note: A line has been drawn through the pressure coefficients for which the data are doubtful.

TABLE 33.- CONTINUED

(b) Vertical tail

Orifice No. \ α	4.07	8.17	16.52	24.86	26.92	28.91	32.74
201	-1.39	-1.21	-1.02	-1.02	-0.94	-0.96	-0.54
202	.09	.02	-.04	.04	.02	-.02	-1.41
203	-.70	-.63	-.64	-.72	-.72	-.73	-.57
204	~~.18~~	~~.17~~	~~.17~~	~~.11~~	~~.11~~	~~.08~~	~~-.11~~
205	-.44	-.42	-.49	-.60	-.60	-.61	-.59
206	~~.07~~	~~.09~~	~~.13~~	~~.13~~	~~.13~~	~~.11~~	~~.05~~
207	-.39	-.40	-.47	-.57	-.57	-.61	-.62
208	.22	.13	-.17	-.72	-.79	-.63	-1.03
209	-1.28	-1.23	-1.87	-1.83	-1.40	-1.38	-.97
210	.11	.04	-.11	-.26	-.23	-.21	-.73
211	-.61	-.62	-.72	-.66	-.85	-.88	-.86
212	.20	.15	.06	-.09	-.13	-.17	-.81
213	-.44	-.45	-.62	-.74	-.77	-.81	-.86
214	.16	.11	.06	-.17	-.23	-.29	-.89
215	-.33	-.34	-.45	-.64	-.64	-.69	-.76
216	~~.11~~	~~.09~~	~~-.09~~	~~-.59~~	~~-.60~~	~~-.40~~	~~-.86~~
217	-2.57	-2.55	-1.87	-2.23	-2.55	-2.92	-1.84
218	.16	.11	-.02	-.13	-.15	-.17	-.41
219	-.48	-.49	-.55	-.74	-.81	-.87	-.97
220	.22	.13	.09	-.09	-.15	-.21	-.73
221	-.35	-.40	-.53	-.72	-.77	-.85	-.95
222	.09	.09	.02	-.23	-.34	-.47	-.81
223	-.35	-.40	-.49	-.70	-.74	-.83	-.89
224	.07	.04	-.04	-.30	-.32	-.51	-.73
225	-.67	-.98	-1.06	-1.06	-1.15	-1.23	-1.08
226	.30	.23	.17	.13	.13	.11	-.14
227	-.44	-.43	-.43	-.60	-.68	-.77	-.86
228	.28	.28	.26	.19	.15	.09	-.51

Note: Lines have been drawn through the pressure coefficients for which the data are doubtful.

TABLE 33.- CONTINUED

(b) Vertical tail (Concluded)

Orifice No. \ α	4.07	8.17	16.52	24.86	26.92	28.91	32.74
229	~~0.07~~	~~0.11~~	~~0.13~~	~~0.13~~	~~0.13~~	~~0.11~~	~~0.06~~
230	.30	-.28	.26	.11	.04	-.11	-.68
231	-.22	-.23	-.30	-.47	-.51	-.64	-.78
232	.24	.23	.19	-.02	-.11	-.23	-.62
233	-.72	-.81	-.94	-.98	-1.02	-1.00	-1.00
234	.28	.26	.21	.15	.15	.13	-.08
235	-.67	-.77	-.72	-.91	-.96	-.98	-.97
236	.24	.21	.02	.13	.15	.13	-.24
237	-.35	-.38	-.40	-.60	-.68	-.77	-.86
238	.37	.36	.36	.26	.21	.08	-.62
239	-.24	-.28	-.32	-.49	-.60	-.65	-.84
240	.33	.32	.04	.04	-.04	-.17	-.57
241	-.65	-.70	-.79	-.89	-.91	-.90	-.95
242	.13	.11	.09	.02	0	-.02	-.19
243	-.57	-.55	-.47	-.68	-.70	-.75	-.86
244	.18	.15	.19	.09	.09	.06	-.35
245	-.20	-.19	-.19	-.34	-.43	-.50	-.73
246	.26	-.26	.23	.13	.06	-.04	-.62
247	-.13	-.15	-.19	-.32	-.43	-.48	-.70
248	.24	.23	.19	0	-.11	-.21	-.57
249	-.61	-.64	-.68	-.79	-.83	-.83	-.92
250	-.16	-.17	-.17	-.28	-.30	-.33	-.38
251	-.11	-.09	-.04	-.17	-.21	-.27	-.59
252	.07	.09	.11	.02	0	-.04	-.49
253	0	0	-.02	-.13	-.19	-.25	-.62
254	.13	.13	.13	.02	-.02	-.11	-.59
255	.02	.04	0	-.17	-.21	-.29	-.62
256	.18	.17	.13	-.06	-.13	-.21	-.57

Note: A line has been drawn through the pressure coefficients for which the data are doubtful.

TABLE 33.- CONTINUED

(c) Fuselage

Orifice No. \ α	4.07	8.17	16.52	24.86	26.92	28.91	32.74
301	0.06	-0.04	-0.25	-1.00	-1.11	-1.15	-1.11
302	.32	.17	-.11	-.53	-.63	-.71	-.89
303	.49	.43	.25	-.04	-.13	-.23	-.41
304	.49	.60	.69	.77	.76	.75	.73
305	.26	.36	.58	.66	.70	.71	.76
306	~~.02~~	~~.04~~	~~.02~~	~~-.09~~	~~-.11~~	~~-.15~~	~~-.22~~
307	0	-.04	-.23	-.53	-.61	-.63	-.70
308	0	-.11	-.40	-1.06	-1.11	-1.04	-.97
309	-.06	-.09	-.15	-.21	-.22	-.23	-.27
310	.09	-.02	-.27	-.62	-.70	-.77	-.97
311	.26	.17	-.04	-.38	-.52	-.61	-.86
312	.28	.36	.42	.47	.46	.44	.43
313	.04	.09	.19	.28	.30	.31	.38
314	-.04	-.09	-.21	-.43	-.48	-.54	-.70
315	-.04	-.09	-.25	-.57	-.67	-.75	-.97
316	-.02	-.06	-.15	-.28	-.33	-.35	-.46
317	.06	-.04	-.29	-.62	-.72	-.77	-.97
318	.15	.11	-.06	-.36	-.48	-.54	-.76
319	.15	.21	.29	.32	.30	.29	.30
320	0	.09	.23	.43	.48	.50	.59
321	-.13	-.15	-.25	-.43	-.46	-.48	-.59
322	-.13	-.19	-.35	-.66	-.74	-.81	-1.00
323	-.13	-.13	-.21	-.34	-.39	-.42	-.51
324	-.09	-.15	-.31	-.51	-.59	-.61	-.68
325	-.09	0	.15	.32	.37	.42	.51
326	-.21	-.23	-.33	-.53	-.59	-.61	-.70
327	-.45	-.49	-.56	-.64	-.63	-.61	-.62
328	-.15	-.28	-.54	-.87	-.96	-1.04	-.97
329	-.11	-.04	.06	.21	.26	.29	.35
330	-.11	-.13	-.25	-.45	-.50	-.52	-.62
331	-.11	-.13	-.17	-.21	-.24	-.23	-.41
332	.06	.02	-.08	-.53	-.72	-1.04	-1.03
333	-.28	-.21	-.04	.11	.16	.17	.22
334	-.15	-.09	.06	.19	.22	.25	.27
335	.09	.06	0	-.60	-.83	-.83	-.81
336	.15	.15	.11	-.40	-.52	-.65	-.78
337	-.26	-.21	-.11	-.02	.02	.04	.05
338	-.17	-.13	-.02	.09	.11	.13	.14

Note: A line has been drawn through the pressure coefficients for which the data are doubtful.

TABLE 33.- CONTINUED

(c) Fuselage (Concluded)

Orifice No. \ α	4.07	8.17	16.52	24.86	26.92	28.91	32.74
339	0.17	0.17	0.15	-0.23	-0.35	-0.48	-0.76
340	~~.13~~	~~.13~~	~~.15~~	~~.17~~	~~.22~~	~~.21~~	~~.14~~
341	-.17	-.15	-.08	-.02	0	0	.03
342	-.13	-.09	-.04	0	.02	.02	0
343	-.09	-.11	-.17	-.23	-.28	-.33	-.46
344	-.19	-.19	-.21	-.34	-.41	-.46	-.59
345	-.11	-.09	-.04	-.06	-.07	-.11	-.22
346	-.11	-.09	-.02	0	0	0	-.11
347	-.15	-.11	-.08	-.04	-.02	-.04	-.05
348	-.11	-.09	-.06	-.04	-.04	-.04	-.08
349	-.13	-.11	-.08	-.06	-.04	-.06	-.11
350	.11	.13	.11	.04	.04	0	-.46
351	.06	.09	.08	.06	.02	-.04	-.54
352	.09	.09	.13	.11	.09	.04	-.27
353	-.15	-.15	-.13	-.15	-.18	-.21	-.22
354	-.04	-.06	-.11	-.15	-.16	-.21	-.30
355	-.02	-.02	-.02	-.04	-.07	-.11	-.19
356	0	-.02	0	-.13	-.13	-.21	-.41
357	.06	.06	.06	-.04	-.07	-.11	-.43
358	~~.32~~	~~.30~~	~~.27~~	~~.17~~	~~.18~~	~~.11~~	~~0~~
359	.02	.04	.02	.02	0	-.04	-.11
360	-.06	-.06	-.04	-.06	-.07	-.13	-.38
361	-.30	-.32	-.35	-.36	-.37	-.35	-.38
362	-.19	-.21	-.23	-.30	-.28	-.33	-.41
363	-.13	-.15	-.17	-.19	-.18	-.21	-.27
364	-.04	-.04	-.04	-.11	-.11	-.15	-.27
365	.09	.09	.08	.06	.07	.04	-.05
366	.02	-.04	-.17	-.45	-.67	-1.02	-1.08
367	-.06	.02	.15	.28	.33	.33	.38
368	-.13	-.06	.08	.23	.28	.31	.35
369	.04	.06	.13	.13	.13	.13	.11
370	.04	.06	.13	.13	.13	.13	.11
371	.09	.11	.13	.13	.13	.11	.05
372	.09	.11	.13	.13	.13	.11	.05

Note: Lines have been drawn through the pressure coefficients for which the data are doubtful.

TABLE 33.- CONCLUDED

(d) Fuselage-duct rakes

Tube No. \ α	4.07	8.17	16.52	24.86	26.92	28.91	32.74
401 T. H.[a]	0.85	0.85	0.81	0.72	0.66	0.64	0.47
402 St. H.[b]	-.26	-.32	-.40	-.55	-.53	-.64	-.94
403 T. H.	.94	.91	.83	.72	.68	.64	.44
404	---	---	---	---	---	---	---
405 St. H.	0	0	-.06	-.13	-.15	-.21	-.44
406 T. H.	.98	.96	.89	.74	.70	.64	.44
407 T. H.	.98	.98	.92	.79	.74	.68	.53
408 St. H.	.11	.11	.11	.06	.04	0	-.17
409 T. H.	.98	.98	.94	.79	.74	.68	.53
410 T. H.	.98	.98	.94	.83	.79	.74	.61
411 St. H.	.09	.11	.02	-.06	-.09	-.15	-.39
412 T. H.	.98	.96	.89	.74	.68	.64	.44
413 T. H.	.98	.98	.94	.74	.60	.34	.50
414 St. H.	.02	-.02	-.21	-.49	-.57	-.77	-1.11
415 T. H.	.98	.96	.85	.64	.55	.43	0
416 T. H.	.98	.91	.69	.34	.47	.21	-.42
417 St. H.	-.15	-.23	-.23	-.64	-.66	-.68	-.72
418 T. H.	.96	.89	.67	.40	.38	.09	-.56
501 T. H.	.68	.68	.58	.43	.38	.34	.19
502 St. H.	.66	.64	.52	.38	.36	.30	.14
503 T. H.	.70	.70	.60	.43	.38	.34	.19
504 T. H.	.70	.70	.58	.43	.38	.34	.19
505 St. H.	.64	.62	.52	.38	.34	.30	.14
506 T. H.	.70	.68	.56	.43	.38	.34	.19
507 T. H.	.68	.66	.54	.43	.38	.34	.19
508 St. H.	.64	.62	.52	.38	.36	.30	.14
509 T. H.	.68	.64	.56	.43	.38	.34	.19
510 T. H.	.81	.79	.65	.45	.43	.34	.22
511 St. H.	.66	.64	.52	-.38	.36	.30	.14
512 T. H.	.87	.83	.69	.47	.43	.38	.25
513	---	---	---	---	---	---	---
514 St. H.	.66	.64	.52	.38	.34	.30	.14
515 T. H.	.85	.85	.69	.49	.45	.40	.25
516 T. H.	.77	.79	.67	.49	.45	.40	.25
517 St. H.	.64	.62	.52	.38	.34	.30	.14
518	---	---	---	---	---	---	---
519 T. H.	.89	.83	.71	.49	.45	.38	.25
520 St. H.	.66	.62	.52	.38	.34	.30	.14
521 T. H.	.77	.70	.58	.43	.38	.34	.19
522 St. H.	.64	.62	.52	.36	.36	.30	.14
523 T. H.	.68	.62	.52	.36	.34	.32	.14

[a]Total-head tube (coefficient given as P_t).

[b]Static-head tube (coefficient given as P_s).

TABLE 34.- PRESSURE COEFFICIENTS FOR THE FLYING MOCK-UP OF THE XP-92 AIRPLANE, $\beta = 9.98^{\circ}$, $\delta_e \doteq -10^{\circ}$, $\delta_a = 0^{\circ}$, $\delta_r = 10^{\circ}$

(a) Wing

Orifice No. \ α	4.07	8.17	16.52	24.86	26.92	28.91	32.74
101	0.02	0.15	0.35	0.73	0.57	0.60	0.63
102	-.13	-.21	-.46	-.80	-.98	-1.11	-1.39
103	—	—	—	—	—	—	—
104	—	—	—	—	—	—	—
105	.06	.13	.23	.22	.23	.21	.21
106	-.19	-.36	-.63	-3.77	-3.68	-3.45	-2.66
107	.09	.11	-.13	-.47	-.55	-.60	-.63
108	-.30	-.68	-.90	-3.08	-2.98	-2.87	-2.32
109	-.02	.04	.15	.29	.32	.32	.37
110	-.19	-.26	-.46	-.77	-.77	-.77	-.92
111	-.02	.06	.25	.37	.62	.45	.45
112	-.19	-.30	-.52	-1.18	-1.55	-1.74	-1.66
113	.02	.09	.19	.22	.23	.23	.21
114	-.23	-.43	-2.73	-2.33	-2.19	-2.11	-1.74
115	.06	.06	-.04	-.18	-.21	-.23	-.32
116	-.34	-.74	-2.02	-1.80	-1.79	-1.72	-1.53
117	-.17	-.13	0	.14	.15	.19	.24
118	-.19	-.26	-.42	-.59	-.62	-.66	-.71
119	-.11	-.02	.15	.31	.36	.38	.42
120	-.19	-.26	-.42	-.75	-.81	-.91	-1.03
121	-.06	.04	.21	.33	.34	.36	.39
122	-.19	-.28	-.38	-1.29	-1.45	-1.53	-1.37
123	-.02	.02	.13	.16	.17	.17	.16
124	-.23	-.40	-2.38	-1.63	-1.57	-1.55	-1.37
125	0	.04	.06	-.02	-.04	-.09	-.13
126	-.32	-.74	-1.33	-1.33	-1.27	-1.30	-1.21
127	-.17	-.13	-.04	.06	.08	.11	.13
128	-.13	-.15	-.25	-.39	-.44	-.49	-.68
129	-.13	-.06	.06	.16	.19	.17	.24
130	-.09	-.13	-.27	-.51	-.60	-.68	-.84
131	-.13	-.06	.06	.16	.19	.19	.21
132	-.11	-.17	-.35	-1.08	-1.15	-1.17	-1.13
133	-.09	0	.11	.16	.19	.19	.16
134	-.15	-.26	-1.17	-1.12	-1.13	-1.13	-1.08
135	-.02	.09	.13	.10	.09	.09	.03
136	-.19	-1.00	-.77	-.88	-.91	-.94	-.95
137	-.21	-.19	-.11	-.06	-.04	-.04	-.02
138	.13	.11	.08	.02	-.04	-.09	-.32

TABLE 34.- CONTINUED

(a) Wing (Concluded)

Orifice No. \ α	4.07	8.17	16.52	24.86	26.92	28.91	32.74
139	-0.19	-0.17	-0.06	-0.02	-0.02	0	-0.03
140	.17	.15	.04	.10	-.21	-.26	-.55
141	-.26	-.21	-.13	-.10	-.09	-.06	.08
142	.15	.13	0	-.59	-.72	-.81	-.89
143	-.17	-.13	-.08	-.04	-.02	-.02	-.02
144	.06	.02	-.65	-.73	-.81	-.79	-.87
145	-.15	.09	-.02	.02	-.02	.02	-.03
146	.02	-.62	-.44	-.59	-.64	-.70	-.79
147	-.19	-.36	-.31	-.24	-.23	-.21	-.24
148	.23	.23	.23	.08	.06	0	-.11
149	~~-.13~~	~~-.13~~	~~-.13~~	~~-.18~~	~~-.21~~	~~-.23~~	~~-.34~~
150	-.21	-.02	-.04	-.24	-.30	-.34	-.50
151	-.64	-.62	-.52	-.41	-.38	-.36	-.39
152	.38	.34	.15	-.71	-.79	-.81	-.87
153	-.58	-.55	-.48	-.39	-.34	-.32	-.29
154	.02	.06	-.48	-.63	-.64	-.72	-.82
155	-.19	-.06	-.33	-.22	-.19	-.17	-.21
156	.02	-.26	-.33	-.51	-.60	.45	-.79
157	-.15	-.11	-.08	-.02	-.02	-.02	-.11
158	.17	.15	.15	.10	.06	.04	-.18
159	-.15	-.13	-.08	-.06	-.04	-.04	-.11
160	.19	.17	.11	0	-.11	-.17	-.50
161	-.19	-.15	-.13	-.14	-.15	-.15	-.18
162	.15	.13	-.08	-.69	-.81	-.83	-.89
163	-.19	-.15	-.15	-.14	-.15	-.15	-.18
164	.06	.09	-.50	-.59	-.66	-.66	-.79
165	-.19	-.11	-.06	-.08	-.09	-.09	-.13
166	-.02	-.15	-.31	-.45	-.53	-.55	-.68
167	.11	.11	.15	.14	.15	.13	0
168	.17	.17	.19	.18	.17	.15	0
169	.09	.09	.08	.06	.04	0	-.21
170	.15	.15	.11	.08	.02	-.02	-.32
171	.06	.06	0	-.31	-.38	-.40	-.50
172	.11	.09	-.06	-.53	-.62	-.66	-.76
173	.11	.06	-.13	-.22	-.26	-.26	-.37
174	.09	0	-.27	-.41	-.47	-.49	-.66
175	0	-.02	-.13	-.22	-.28	-.28	-.42
176	.09	.06	-.15	-.31	-.40	-.40	.71

Note: A line has been drawn through the pressure coefficients for which the data are doubtful.

TABLE 34.– CONTINUED

(b) Vertical tail

Orifice No. \ α	4.07	8.17	16.52	24.86	26.92	28.77	32.74
201	0.02	-0.02	-0.08	-0.02	0	-0.28	-1.38
202	-1.17	-1.00	-.83	-.85	-.89	-.81	-.57
203	.20	.16	.08	-.13	-.20	-.49	-1.13
204	.07	.09	.08	.06	.04	0	-.08
205	.22	.16	-.17	-.72	-.74	-.74	-1.05
206	.07	.11	.15	.15	.13	.11	0
207	.20	.11	-.21	-.70	-.72	-.70	-1.03
208	-.37	-.39	-.44	-.57	-.63	-.64	-.62
209	.13	.07	-.06	-.21	-.22	-.17	-.78
210	-1.04	-1.02	-1.23	-1.32	-1.26	-1.23	-.92
211	.15	.11	.02	-.11	-.16	-.30	-.84
212	-.52	-.54	-.65	-.79	-.83	-.85	-.86
213	.09	.04	0	-.19	-.26	-.60	-.89
214	-.35	-.37	-.52	-.68	-.72	-.77	-.84
215	.13	.09	-.13	-.51	-.46	-.55	-.81
216	-.33	-.39	-.48	-.70	-.76	-.79	-.69
217	-.16	.11	.02	-.11	-.13	-.15	-.49
218	-1.17	-1.57	-1.50	-2.00	-2.24	-2.55	-1.35
219	.04	.02	-.02	-.19	-.24	-.36	-.78
220	-.30	-.33	-.40	-.60	-.65	-.70	-.89
221	-.02	-.04	-.11	-.38	-.44	-.64	-.81
222	-.26	-.26	-.38	-.57	-.65	-.70	-.89
223	-.02	-.04	-.15	-.38	-.37	-.55	-.76
224	-.24	-.28	-.38	-.60	-.65	-.72	-.86
225	-.11	-.13	-.19	-.28	-.30	-.34	-.49
226	-.44	-.41	-.29	-.45	-.55	-.70	-.81
227	-.20	-.22	-.25	-.40	-.43	-.49	-.70
228	.07	.09	.11	.02	-.04	-.13	-.51
229	.09	.11	.15	.15	.13	.11	0
230	.15	.16	.11	.02	-.02	-.13	-.49

Note: Lines have been drawn through the pressure coefficients for which the data are doubtful.

TABLE 34.– CONTINUED

(b) Vertical tail (Concluded)

Orifice No. \ α	4.07	8.17	16.52	24.86	26.92	28.77	32.74
231	-0.15	-0.16	-0.19	-0.43	-0.52	-0.51	-0.68
232	.13	.13	.08	-.02	-.09	-.15	-.43
233	-.09	-.09	-.15	-.21	-.24	-.28	-.73
234	-.22	-.20	-.19	-.30	-.37	-.45	-.70
235	-.28	-.28	-.31	-.45	-.48	-.55	-.68
236	.02	.02	-.29	-.38	-.28	-.28	-.65
237	-.28	-.30	-.33	-.57	-.63	-.68	-.76
238	.22	.24	.21	.13	.09	0	-.43
239	-.24	-.24	-.25	-.47	-.52	-.47	-.65
240	.22	.24	.21	.13	.07	-.02	-.35
241	-.11	-.13	-.17	-.26	-.26	-.32	-.51
242	-.16	-.16	-.15	-.26	-.30	-.38	-.65
243	-.11	-.11	-.15	-.26	-.28	-.34	-.59
244	.09	.11	.13	.13	.04	-.02	-.57
245	-.11	-.11	-.15	-.34	-.39	-.49	-.73
246	.16	.18	.15	.02	0	-.11	-.49
247	-.09	-.11	-.13	-.30	-.35	-.38	-.65
248	.20	.22	.19	.28	0	-.09	-.41
249	-.09	-.13	-.17	-.26	-.28	-.34	-.51
250	-.09	-.11	-.13	-.21	-.26	-.34	-.62
251	.07	.04	.02	-.06	-.09	-.17	-.51
252	.09	.11	.11	.02	0	-.04	-.49
253	.04	.04	.02	.11	-.16	-.30	-.65
254	.11	.13	.11	0	-.26	-.15	-.54
255	.07	.07	.02	-.11	-.18	-.30	-.65
256	.18	.20	.15	.02	.04	-.15	-.49

TABLE 34.– CONTINUED

(c) Fuselage

Orifice No. \ α	4.07	8.17	16.52	24.86	26.92	28.91	32.74
301	-0.04	-0.04	-0.33	-1.06	-1.11	-1.15	-1.18
302	-.04	-.13	-.38	-1.15	-1.17	-1.15	-1.00
303	-.07	-.11	-.29	-.64	-.70	-.72	-.78
304	.04	.06	.06	-.02	-.07	-.09	-.13
305	.29	.15	.13	.71	.74	.78	.84
306	~~.36~~	~~.40~~	~~.50~~	~~.53~~	~~.48~~	~~.46~~	~~.42~~
307	.56	.47	.31	.06	-.02	-.09	-.29
308	.27	.11	-.21	-.62	-.72	-.78	-1.00
309	-.20	-.11	-.25	-.43	-.44	-.41	-.53
310	-.07	-.09	-.15	-.26	-.30	-.33	-.42
311	-.07	-.11	-.27	-.60	-.70	-.76	-.95
312	-.07	-.09	-.19	-.34	-.41	-.44	-.53
313	.13	.23	.40	.60	.63	.67	.74
314	.31	.36	.40	.36	.35	.33	.24
315	.31	.26	.11	-.19	-.30	-.37	-.58
316	.13	.02	-.25	-.62	-.70	-.78	-.97
317	-.11	-.11	-.19	-.32	-.37	-.41	-.47
318	-.13	-.17	-.35	-.66	-.74	-.83	-.97
319	-.16	-.17	-.27	-.47	-.50	-.54	-.63
320	-.09	-.04	.06	.17	.20	.24	.26
321	.13	.19	.29	.13	.35	.35	.32
322	.16	.15	.02	-.23	-.30	-.37	-.55
323	.04	-.06	-.31	-.66	-.74	-.79	-.97
324	-.27	-.26	-.29	-.53	-.65	-.64	-.68
325	-.18	-.15	-.08	0	.02	.04	.11
326	-.02	.04	.15	.19	.20	.21	.21
327	-.44	-.47	-.56	-.60	-.59	-.57	-.58
328	-.02	-.09	-.27	-.60	-.67	-.68	-.74
329	-.09	-.02	.11	.25	.30	.34	.39
330	.02	.09	.19	.25	.26	.30	.34
331	-.16	-.19	-.23	-.25	-.26	-.26	-.39
332	-.24	-.26	-.40	-.63	-.70	-.79	-1.00
333	-.26	-.19	-.04	.11	.16	.17	.21
334	-.18	-.06	.11	.25	.28	.28	.11
335	-.16	-.17	-.28	-.49	-.63	-.66	-.84
336	.02	.02	-.06	-.19	-.26	-.32	-.58

Note: A line has been drawn through the pressure coefficients for which the data are doubtful.

TABLE 34.- CONTINUED

(c) Fuselage (Concluded)

Orifice No. \ α	4.07	8.17	16.52	24.86	26.92	28.91	32.74
337	-0.27	-0.23	-0.09	0	0.02	0.04	0.08
338	-.24	-.19	-.04	.06	.09	.09	.13
339	.04	.06	.02	-.04	-.13	-.24	-.45
340	~~2.46~~	~~2.43~~	~~2.40~~	~~2.40~~	~~2.43~~	~~2.43~~	~~2.37~~
341	-.18	-.15	-.08	-.02	0	0	-.03
342	-.18	-.15	-.06	-.02	0	-.04	-.05
343	-.04	-.04	-.08	-.32	-.39	-.59	-.68
344	-.07	-.06	-.11	-.36	-.46	-.65	-.74
345	-.13	-.13	-.08	-.04	-.06	-.07	-.11
346	-.09	-.06	-.04	-.02	0	-.02	-.05
347	-.13	-.11	-.06	-.02	0	-.02	-.03
348	-.11	-.09	-.02	-.02	-.02	-.07	-.11
349	-.13	-.11	-.06	-.04	-.04	-.13	-.18
350	.11	.09	.08	.02	-.02	-.13	-.37
351	.24	.02	.04	.02	.02	-.04	-.18
352	0	0	0	-.02	-.04	-.09	-.24
353	.22	.23	.23	.21	.22	.13	.04
354	.09	.09	.08	.06	.24	-.13	-.32
355	-.02	0	-.04	-.02	-.04	-.22	-.61
356	.02	.02	.02	-.02	-.04	-.18	-.50
357	.07	.09	.06	-.02	-.04	-.18	-.50
358	~~.33~~	~~.32~~	~~.29~~	~~.17~~	~~.15~~	~~.09~~	~~-.05~~
359	-.02	.02	0	-.06	-.09	-.16	-.32
360	-.11	-.11	-.06	-.13	-.19	-.28	-.42
361	-.29	-.26	-.25	-.32	-.32	-.35	-.39
362	-.04	-.09	-.13	-.17	-.23	-.46	-.63
363	-.02	-.02	-.02	-.02	-.06	-.13	-.37
364	.02	0	0	0	-.02	-.07	-.18
365	.11	.11	.11	.06	.04	-.04	-.18
366	-.20	-.23	-.35	-.77	-.91	-1.04	-1.29
367	-.07	.02	.21	.40	.44	.46	.50
368	-.13	-.04	.13	.26	.30	.39	.39
369	.02	.06	.15	.17	.16	.13	.08
370	.02	.06	.15	.17	.16	.13	.08
371	.09	.11	.15	.15	.13	.09	0
372	.09	.11	.15	.15	.13	.09	0

Note: Lines have been drawn through the pressure coefficients for which the data are doubtful.

TABLE 34.- CONCLUDED

(d) Fuselage-duct rakes

Tube No. \ α	4.07	8.17	16.52	24.86	26.92	28.91	32.74
401 T. H.[a]	0.98	0.98	0.92	0.67	0.60	0.56	0.38
402 St. H.[b]	.46	.45	.40	.29	.26	.20	.11
403 T. H.	.98	.98	.96	.85	.79	.78	.62
404	---	---	---	---	---	---	---
405 St. H.	.27	.26	.19	.13	.09	0	-.11
406 T. H.	.98	.98	.96	.85	.79	.78	.66
407 T. H.	.98	.98	.96	.83	.79	.75	.61
408 St. H.	.15	.15	.13	.08	.06	-.02	-.13
409 T. H.	.98	.98	.96	.85	.81	.80	.66
410 T. H.	.98	.96	.94	.87	.83	.82	.71
411 St. H.	.06	.06	0	-.15	-.19	-.28	-.39
412 T. H.	.96	.96	.92	.77	.70	.65	.47
413 T. H.	.96	.96	.92	.71	.62	.50	.24
414 St. H.	-.02	-.04	-.17	-.35	-.43	-.57	-.92
415 T. H.	.96	.94	.85	.62	.53	.65	.08
416 T. H.	.85	.89	.69	.12	.15	.11	-.37
417 St. H.	-.15	-.19	-.44	-.63	-.64	-.74	-.71
418 T. H.	.91	.81	.57	.42	.28	-.15	-.66
501 T. H.	.64	.62	.56	.39	.34	.26	.11
502 St. H.	.65	.58	.52	.38	.32	.24	.11
503 T. H.	.66	.64	.58	.39	.34	.28	.11
504 T. H.	.66	.62	.56	.39	.34	.28	.11
505 St. H.	.64	.58	.52	.38	.32	.24	.11
506 T. H.	.64	.62	.56	.43	.36	.26	.13
507 T. H.	.66	.62	.54	.40	.36	.26	.13
508 St. H.	.61	.57	.52	.38	.32	.24	.08
509 T. H.	.70	.66	.54	.43	.36	.28	.13
510 T. H.	.66	.62	.50	.34	.32	.28	.08
511 St. H.	.61	.60	.52	.38	.32	.24	.08
512 T. H.	.66	.62	.52	.36	.32	.24	.08
513	---	---	---	---	---	---	---
514 St. H.	.61	.60	.52	.38	.32	.24	.08
515 T. H.	.68	.62	.54	.37	.32	.24	.08
516 T. H.	.66	.62	.54	.37	.32	.24	.08
517 St. H.	.64	.60	.52	.38	.32	.24	.08
518	---	---	---	---	---	---	---
519 T. H.	.68	.62	.54	.37	.32	.24	.08
520 St. H.	.61	.60	.52	.38	.32	.24	.08
521 T. H.	.64	.62	.50	.37	.28	.24	.08
522 St. H.	.61	.60	.52	.38	.32	.24	.08
523 T. H.	.62	.56	.52	.35	.28	.22	.05

[a]Total-head tube (coefficient given as P_t).

[b]Static-head tube (coefficient given as P_s).

TABLE 35.- PRESSURE COEFFICIENTS FOR THE FLYING MOCK-UP OF THE XP-92 AIRPLANE, LANDING GEAR EXTENDED, $\beta = 0.13^{\circ}$, $\delta_e = -10^{\circ}$, $\delta_a = 0^{\circ}$, $\delta_r = 0^{\circ}$

(a) Wing

Orifice No. \ α	4.01	8.17	16.52	24.84	26.90	28.94	32.95
101	0.04	0.13	0.37	0.54	0.61	0.63	0.63
102	-.16	-.26	-.48	-.87	-1.17	-1.63	-1.82
103	--	--	--	--	--	--	--
104	--	--	--	--	--	--	--
105	.11	.19	.33	.44	.46	.46	.45
106	-.22	-.43	-.96	-3.15	-2.87	-2.39	-1.63
107	.18	.23	.02	-.16	-.20	-.20	-.24
108	-.37	-.77	-2.11	-2.59	-2.52	-2.20	-1.82
109	.04	.11	.26	.39	.44	.48	.24
110	-.16	-.21	-.39	-.70	-.87	-.93	-.97
111	.02	.09	.28	.44	.48	.50	.53
112	-.22	-.32	-.57	-1.65	-1.85	-1.76	-1.63
113	-.04	.13	.28	.39	.39	.41	.39
114	-.28	-.47	-1.15	-1.87	-1.80	-1.65	-1.45
115	.13	.19	.09	.07	.04	.02	0
116	-.41	-.81	-.91	-1.57	-1.57	-1.41	-1.26
117	-.57	-.43	-.16	-.02	.02	.07	.11
118	-.16	-.19	-.61	-.61	-.70	-.70	-.79
119	-.44	-.38	-.18	-.02	0	.04	.11
120	-.18	-.21	-.37	-.72	-.89	-.93	-1.11
121	-.09	-.04	.07	.11	.11	.09	.08
122	-.41	-.30	-.50	-1.41	-1.50	-1.39	-1.34
123	-.02	.04	.20	.28	.30	.30	.32
124	-.26	-.45	-2.00	-1.30	-1.35	-1.22	-1.16
125	.02	.13	.24	.24	.24	.22	.18
126	-.37	-.72	-1.80	-1.13	-1.17	-1.07	-1.05
127	-.41	-.15	-.02	.07	.09	.11	.13
128	-.13	-.15	-.24	-.50	-.61	-.61	-.76
129	-.41	-.15	0	.09	.11	.13	.16
130	-.11	-.15	-.26	-.65	-.78	-.89	-1.00
131	-.41	-.11	.04	.13	.16	.18	.18
132	-.16	-.21	-.37	-1.07	-1.13	-1.09	-1.11
133	-.13	-.02	.16	.26	.30	.30	.34
134	-.41	-.34	-1.15	-.91	-.96	-.93	-.97
135	-.04	.11	.26	.28	.30	.28	.26
136	-.28	-.57	-.91	-.83	-.87	-.85	-.89
137	-.18	-.15	-.09	-.04	-.04	-.04	-.08
138	.09	.09	.02	-.13	-.20	-.30	-.53

TABLE 35.- CONTINUED

(a) Wing (Concluded)

Orifice No. \ α	4.01	8.17	16.52	24.84	26.90	28.94	32.95
139	-0.22	-0.19	-0.11	-0.09	-0.07	-0.07	-0.08
140	.13	.11	.13	-.39	-.54	-.65	-.84
141	-.28	-.23	-.16	-.13	-.11	-.13	-.13
142	.13	.09	-.09	-.78	-.87	-1.09	-.97
143	-.24	-.15	-.09	-.02	0	0	.03
144	0	-.09	-.65	-.70	-.74	-.98	-.84
145	-.41	-.09	0	.07	.07	.07	.08
146	-.04	-.26	-.52	-.63	-.70	-.72	-.82
147	-.28	-.26	-.22	-.22	-.22	-.22	-.29
148	.22	.23	.18	.07	.04	-.04	-.34
149	~~-.18~~	~~-.15~~	~~-.13~~	~~-.26~~	~~-.30~~	~~-.30~~	~~-.37~~
150	-.04	-.04	-.11	-.37	-.48	-.57	-.79
151	-.78	-.70	-.61	-.52	-.48	-.44	-.42
152	.39	.32	-.07	-.72	-.80	-.85	-.95
153	-.78	-.64	-.52	-.46	-.44	-.39	-.29
154	.22	0	-.54	-.63	-.70	-.72	-.84
155	-.28	-.11	.04	-.18	-.18	-.16	-.11
156	0	-.26	-.50	-.59	-.63	-.70	-.84
157	-.13	-.13	-.07	-.07	-.07	-.09	-.16
158	.11	.11	.07	-.04	-.09	-.18	-.42
159	-.18	-.15	-.13	-.13	-.13	-.20	-.21
160	.16	.15	.07	-.35	-.48	-.63	-.82
161	-.22	-.19	-.18	-.20	-.22	-.20	-.24
162	.13	.09	-.26	-.74	-.80	-.83	-.89
163	-.28	-.21	-.18	-.18	-.16	-.16	-.16
164	.07	-.04	-.48	-.59	-.63	-.67	-.76
165	-.33	-.15	-.09	-.02	-.02	-.04	-.05
166	-.04	-.19	-.46	-.54	-.59	-.65	-.74
167	0	.02	.07	.07	.02	0	-.18
168	.09	.09	.11	.09	.09	.02	-.24
169	.07	.06	.04	-.16	-.24	-.33	-.50
170	.11	.11	.07	-.24	-.37	-.48	-.71
171	.04	.06	-.09	-.37	-.41	-.44	-.53
172	.09	.09	-.20	-.59	-.67	-.70	-.82
173	.07	.06	-.13	-.24	-.23	-.30	-.37
174	.09	.06	-.30	-.44	-.52	-.57	-.66
175	-.07	-.04	-.16	-.26	-.52	-.57	-.39
176	.09	.02	-.26	-.39	-.46	-.54	-.61

Note: A line has been drawn through the pressure coefficients for which the data are doubtful.

TABLE 35.– CONTINUED

(b) Vertical tail

Orifice No. \ α	4.01	8.17	16.52	24.84	26.90	28.94	32.95
201	0	-0.04	-0.13	-0.26	-0.31	-0.45	-0.64
202	-.06	-.08	-.18	-.34	-.42	-.39	-.51
203	-.06	-.11	-.22	-.36	-.44	-.57	-.74
204	~~.09~~	~~.11~~	~~.13~~	~~.21~~	~~.21~~	~~.19~~	~~.15~~
205	-.06	-.11	-.20	-.38	-.48	-.60	-.74
206	~~.15~~	~~.21~~	~~.30~~	~~.36~~	~~.56~~	~~.36~~	~~.38~~
207	-.06	-.11	-.22	-.38	-.48	-.60	-.72
208	-.09	-.13	-.26	-.45	-.52	-.53	.59
209	-.09	-.13	-.24	-.34	-.40	-.47	-.64
210	-.09	-.11	-.20	-.32	-.40	-.45	-.59
211	-.11	-.13	-.24	-.36	-.44	-.51	-.69
212	-.13	-.15	-.24	-.38	-.46	-.51	-.69
213	-.13	-.17	-.26	-.43	-.50	-.60	-.82
214	-.13	-.15	-.24	-.40	-.50	-.55	-.77
215	-.06	-.11	-.20	-.36	-.44	-.51	-.72
216	~~-.15~~	~~-.17~~	~~-.26~~	~~-.45~~	~~-.52~~	~~-.57~~	~~-.82~~
217	-.09	-.11	-.20	-.28	-.33	-.39	-.54
218	-.09	-.11	-.16	-.26	-.33	-.39	-.51
219	-.13	-.15	-.22	-.36	-.46	-.53	-.74
220	-.13	-.13	-.20	-.36	-.44	-.53	-.72
221	-.15	-.17	-.26	-.47	-.56	-.66	-.87
222	-.15	-.17	-.24	-.43	-.52	-.64	-.85
223	-.13	-.15	-.24	-.43	-.54	-.62	-.79
224	-.15	-.17	-.26	-.45	-.54	-.66	-.82
225	-.13	-.13	-.18	-.23	-.29	-.34	-.49
226	-.11	-.11	-.13	-.19	-.25	-.30	-.41
227	-.04	-.04	-.09	-.19	-.27	-.34	-.51
228	-.02	-.02	-.07	-.17	-.23	-.30	-.46

Note: Lines have been drawn through the pressure coefficients for which the data are doubtful.

TABLE 35.– CONTINUED

(b) Vertical tail (Concluded)

Orifice No. \ α	4.01	8.17	16.52	24.84	26.90	28.94	32.95
229	~~0.15~~	~~0.19~~	~~0.28~~	~~0.36~~	~~0.35~~	~~0.39~~	~~0.38~~
230	0	0	–.07	–.19	–.27	–.36	–.56
231	0	0	–.07	–.21	–.29	–.39	–.56
232	0	0	–.07	–.21	–.29	–.39	–.54
233	–.11	–.11	–.16	–.21	–.25	–.21	–.41
234	–.11	–.11	–.13	–.19	–.23	–.21	–.38
235	–.02	–.02	–.07	–.15	–.21	–.26	–.41
236	–.09	–.11	–.16	–.21	–.27	–.32	–.44
237	.04	–.04	–.02	–.13	–.21	–.30	–.49
238	.06	–.04	0	–.11	–.19	–.21	–.46
239	.04	.02	–.02	–.15	–.23	–.32	–.49
240	.02	.02	–.04	–.17	–.25	–.34	–.49
241	–.11	–.13	–.16	–.19	–.25	–.28	–.41
242	–.11	–.11	–.13	–.17	–.23	–.26	–.36
243	.02	0	–.04	–.11	–.17	–.21	–.36
244	.02	–.02	–.07	–.13	–.17	–.23	–.33
245	.04	.04	–.02	–.13	–.19	–.28	–.46
246	.06	.06	.02	–.09	–.17	–.26	–.41
247	.04	.04	0	–.13	–.19	–.28	–.44
248	.06	.04	0	–.11	–.19	–.26	–.41
249	–.06	–.06	–.09	–.15	–.19	–.21	–.33
250	–.06	–.08	–.11	–.17	–.21	–.23	–.33
251	.09	.11	.07	–.02	–.06	–.11	–.26
252	.11	.11	.07	0	–.06	–.11	–.26
253	.09	.08	.04	–.04	–.13	–.21	–.36
254	.13	.13	.09	–.02	–.08	–.15	–.31
255	.09	.08	.04	–.06	–.13	–.19	–.36
256	.13	.11	.09	–.02	–.11	–.17	–.33

Note: A line has been drawn through the pressure coefficients for which the data are doubtful.

TABLE 35.– CONTINUED

(c) Fuselage

Orifice No. \ α	4.01	8.17	16.52	24.84	26.90	28.94	32.95
301	0.17	0.04	-0.17	-0.81	-0.98	-1.04	-1.11
302	.21	.11	-.15	-.64	-.79	-.96	-1.08
303	.26	.21	.02	-.30	-.40	-.51	-.68
304	.36	.42	.43	.43	.42	.38	.32
305	.40	.50	.64	.79	.83	.87	.92
306	~~.30~~	~~.33~~	~~.36~~	~~.34~~	~~.33~~	~~.32~~	~~.29~~
307	.30	.25	.09	-.21	-.31	-.43	-.61
308	.19	.08	-.17	-.77	-1.02	-1.19	-1.24
309	.06	0	-.11	-.19	-.21	-.26	-.34
310	.06	0	-.17	-.38	-.44	-.53	-.63
311	.09	.02	-.17	-.51	-.63	-.77	-1.00
312	.17	.19	.15	.06	.04	0	-.11
313	.28	.33	.47	.60	.63	.66	.71
314	.17	.19	.13	-.04	-.11	-.17	-.26
315	.13	.08	-.09	-.43	-.52	-.66	-.89
316	.09	-.02	-.17	-.43	-.50	-.62	-.79
317	0	-.06	-.19	-.43	-.48	-.57	-.63
318	0	-.06	-.21	-.57	-.58	-.66	-.89
319	.04	.04	.17	.21	.23	.23	.29
320	.02	0	-.19	-.62	-.65	-.68	-.61
321	.06	.08	.15	.15	.17	.15	.13
322	0	-.02	-.17	-.40	-.48	-.62	-.82
323	-.02	-.06	-.23	-.45	-.50	-.60	-.71
324	-.17	-.19	-.28	-.40	-.44	-.49	-.53
325	-.11	-.08	0	.04	.06	.04	.08
326	-.06	-.06	-.02	-.26	-.27	-.23	-.34
327	-.34	-.38	-.43	-.43	-.42	-.45	-.47
328	-.06	-.15	-.32	-.60	-.69	-.77	-.87
329	0	.04	.15	.28	.31	.34	.42
330	.02	.04	0	0	-.02	-.04	-.05
331	.06	.04	-.02	-.15	-.17	-.23	-.34
332	-.13	-.17	-.32	-.77	-.88	-1.04	-1.21
333	-.23	-.17	0	.13	.17	.17	.21
334	-.40	-.39	-.11	.02	.04	.06	.08
335	-.11	-.15	-.28	-.53	-.61	-.77	-1.00
336	0	-.02	-.11	-.30	-.40	-.55	-.79

Note: A line has been drawn through the pressure coefficients for which the data are doubtful.

TABLE 35.-- CONTINUED

(c) Fuselage (Concluded)

Orifice No. \ α	4.01	8.17	16.52	24.84	26.90	28.94	32.95
337	-0.17	-0.13	-0.04	0.04	0.06	0.06	0.11
338	-.17	-.13	-.04	.04	.06	.06	.08
339	.02	.11	-.04	-.21	-.27	-.43	-.63
340	~~2.43~~	~~2.41~~	~~2.36~~	~~2.32~~	~~2.27~~	~~2.32~~	~~2.71~~
341	-.09	-.06	0	.04	.04	.02	.03
342	-.11	-.08	-.04	0	.02	0	-.03
343	0	.11	-.06	-.19	-.21	-.32	-.55
344	0	.08	-.04	-.21	-.29	-.43	-.61
345	-.09	-.06	-.04	.04	-.02	-.09	-.13
346	-.06	-.06	-.02	-.02	0	-.04	-.11
347	-.06	-.04	0	.04	.04	.02	0
348	-.06	-.06	-.02	0	-.02	-.04	-.11
349	-.09	-.06	-.04	-.02	-.04	-.06	-.13
350	.06	.06	.06	.02	0	-.04	-.16
351	.02	.02	.02	.02	0	-.09	-.18
352	.02	.02	.02	0	0	-.09	-.21
353	-.02	0	.02	.04	.04	.02	-.05
354	0	.02	.02	0	-.02	-.09	-.21
355	0	.02	.02	0	-.02	-.09	-.18
356	.06	.06	.04	.02	0	-.06	-.18
357	.09	.06	.06	-.02	-.04	-.09	-.18
358	~~.36~~	~~.35~~	~~.32~~	~~.26~~	~~.23~~	~~-.04~~	~~.05~~
359	.02	.02	.04	0	-.02	-.09	-.16
360	0	0	-.02	-.06	-.13	-.21	-.34
361	-.09	-.11	-.19	-.23	-.27	-.30	-.37
362	0	-.02	-.02	-.09	-.15	-.26	-.42
363	.02	0	.04	0	-.02	-.09	-.16
364	.06	.06	.04	.02	0	-.04	-.11
365	.11	.11	.09	.09	.08	.04	-.08
366	-.09	-.13	-.28	-.66	-.83	-1.00	-1.45
367	.19	.23	.26	.38	.42	.43	.68
368	.02	.10	.06	.47	.50	.51	.58
369	.13	.21	.36	.53	.58	.62	.68
370	.17	.25	.38	.55	.58	.64	.68
371	-.15	-.17	.04	.30	.35	.45	.58
372	-.13	-.04	.15	.28	.31	.32	.37

Note: Lines have been drawn through the pressure coefficients for which the data are doubtful.

TABLE 35.- CONCLUDED

(d) Fuselage-duct rakes

Tube No. \ α	4.01	8.17	16.52	24.84	26.90	28.94	32.95
401 T. H.[a]	0.98	0.98	0.98	0.87	0.83	0.75	0.57
402 St. H.[b]	.06	.04	.02	.11	.08	.04	-.08
403 T. H.	.98	.98	.98	.87	.83	.79	.68
404	---	---	---	---	---	---	---
405 St. H.	.15	.13	.07	.09	.06	.02	-.16
406 T. H.	.98	.98	.98	.85	.81	.75	.59
407 T. H.	.98	.98	.98	.83	.79	.73	.59
408 St. H.	.17	.15	.13	.15	.11	.04	-.08
409 T. H.	.98	.98	.98	.85	.81	.77	.62
410 T. H.	.98	.98	.98	.91	.87	.83	.73
411 St. H.	.15	.11	.11	.06	0	-.04	-.19
412 T. H.	.98	.98	.98	.85	.79	.71	.54
413 T. H.	.98	.98	.98	.89	.87	.85	.54
414 St. H.	.02	-.04	-.04	-.06	-.35	-.48	-.81
415 T. H.	.98	.98	.93	.70	.62	.56	.35
416 T. H.	.98	.96	.93	.70	.02	.15	.08
417 St. H.	-.15	-.19	-.16	-.36	-.46	-.46	-.49
418 T. H.	.96	.92	.70	.49	.33	.02	-.43
501 T. H.	.79	.77	.63	.47	.42	.35	.19
502 St. H.	.74	.71	.61	.45	.40	.33	.22
503 T. H.	.79	.77	.63	.47	.42	.35	.19
504 T. H.	.77	.79	.63	.47	.44	.35	.28
505 St. H.	.72	.69	.61	.45	.40	.33	.22
506 T. H.	.81	.77	.63	.47	.44	.37	.28
507 T. H.	.79	.75	.63	.47	.44	.37	.28
508 St. H.	.72	.69	.59	.43	.38	.33	.22
509 T. H.	.81	.75	.63	.47	.44	.37	.28
510 T. H.	.83	.79	.63	.47	.42	.35	.19
511 St. H.	.72	.71	.61	.43	.40	.33	.22
512 T. H.	.85	.83	.67	.47	.42	.35	.19
513	---	---	---	---	---	---	---
514 St. H.	.72	.71	.61	.43	.40	.33	.22
515 T. H.	.89	.85	.67	.49	.44	.37	.28
516 T. H.	.89	.83	.67	.49	.44	.37	.28
517 St. H.	.72	.69	.61	.43	.40	.33	.22
518	---	---	---	---	---	---	---
519 T. H.	.87	.83	.67	.47	.44	.37	.19
520 St. H.	.72	.69	.61	.45	.40	.33	.22
521 T. H.	.79	.75	.65	.47	.42	.35	.19
522 St. H.	.72	.69	.59	.45	.40	.33	.22
523 T. H.	.72	.69	.59	.45	.37	.33	.16

[a]Total head tube (coefficient given as P_t).

[b]Static head tube (coefficient given as P_s).

TABLE 36.- PRESSURE COEFFICIENTS FOR THE FLYING MOCK-UP OF THE XP-92 AIRPLANE, LANDING GEAR EXTENDED, $\beta = 0.13^{\circ}$, $\delta_e = -10^{\circ}$, $\delta_a = \pm 10^{\circ}$, $\delta_r = 0^{\circ}$

(a) Wing

Orifice No. \ α	4.02	8.17	16.51	24.83	26.83	28.92	32.90
101	0.04	0.09	0.38	0.52	0.57	0.62	0.63
102	-.13	-.23	-.46	-.88	-1.30	-1.64	-1.53
103	--	--	--	--	--	--	--
104	--	--	--	--	--	--	--
105	.09	.21	.33	.42	.45	.45	.47
106	-.20	-.40	-.94	-2.73	-2.23	-2.04	-1.61
107	.18	.23	.02	.08	-.13	-.13	-.18
108	-.33	-.72	-2.00	-2.30	-2.02	-1.92	-1.55
109	.04	.11	.27	.38	.43	.45	.47
110	-.13	-.19	-.35	-.67	-.81	-.94	-.95
111	.02	.09	.27	.42	.45	.49	.50
112	-.18	-.26	-.52	-1.56	-1.55	-1.62	-1.42
113	.04	.13	.27	.38	.38	.40	.37
114	-.24	-.43	-1.02	-1.59	-1.43	-1.45	-1.29
115	.13	.19	.08	.11	.09	.06	0
116	-.36	-.74	-2.90	-1.38	-1.26	-1.28	-1.16
117	-.60	-.45	-.19	-.04	0	.02	.08
118	-.09	-.13	-.25	-.56	-.60	-.64	-.79
119	-.47	-.38	-.19	-.06	-.02	0	.05
120	-.11	-.15	-.31	-.67	-.81	-.89	-1.03
121	-.11	-.04	.04	.11	.09	.09	.05
122	-.16	-.23	-.44	-1.25	-1.21	-1.26	-1.21
123	-.04	.04	.17	.25	.28	.30	.29
124	-.20	-.36	-1.73	-1.13	-1.06	-1.09	-1.05
125	0	.11	.25	.23	.23	.23	.18
126	-.29	-.60	-1.63	-.98	-.94	-.98	-.97
127	-.24	-.19	-.08	.02	.04	.06	.08
128	0	-.04	-.15	-.42	-.47	-.55	-.74
129	-.24	-.19	-.06	.04	.04	.06	.08
130	0	-.02	-.15	-.58	-.70	-.79	-.95
131	-.27	-.17	-.02	.06	.09	.11	--
132	-.02	-.09	-.31	-.92	-.91	-1.00	-1.03
133	-.20	-.09	.11	.21	.23	.26	.26
134	-.03	-.19	-.83	-.77	-.77	-.83	-.89
135	-.09	.06	.23	.25	.26	.26	.24
136	-.18	-.43	-.67	-.67	-.70	-.77	-.87
137	-.33	-.30	-.23	-.21	-.23	-.26	-.29
138	.29	.28	.21	.21	-.09	-.19	-.47
139	-.40	-.36	-.29	-.27	-.28	-.30	-.32
140	.36	.32	.21	-.25	-.45	-.57	-.76

TABLE 36.– CONTINUED

(a) Wing (Concluded)

Orifice No. \ α	4.02	8.17	16.51	24.83	26.88	28.92	32.90
141	-0.53	-0.49	-0.40	-0.35	-0.36	-0.36	-0.39
142	.38	.32	.06	-.65	-.70	-.79	-.87
143	-.38	-.30	-.25	-.23	-.23	-.21	-.21
144	.29	.21	-.46	-.56	-.62	-.66	-.76
145	-.44	-.28	-.15	-.08	-.06	-.04	-.05
146	.27	.11	-.38	-.48	-.55	-.62	-.97
147	-.76	-.68	-.67	-.71	-.77	-.33	-.97
148	.16	.17	.17	.15	.11	.06	-.08
149	~~-.40~~	~~-.36~~	~~-.40~~	~~-.52~~	~~-.57~~	~~-.64~~	~~-.76~~
150	-.31	-.26	-.30	-.52	-.57	-.62	-.61
151	-1.56	-1.51	-1.63	-1.54	-1.77	-1.81	-1.79
152	-.20	-.57	-.65	-.61	-.66	-.72	-.87
153	-1.49	-1.40	-1.40	-1.44	-1.45	-1.49	-1.50
154	-.60	-.26	-.25	-.54	-.57	-.62	-.71
155	-.76	-.55	-.40	-.33	-.34	-.34	-.39
156	.40	.15	-.33	-.46	-.53	-.57	-.45
157	-.29	-.28	-.23	-.25	-.28	-.32	-.39
158	.31	.28	.25	.15	.06	-.02	-.34
159	-.38	-.36	-.31	-.33	-.36	-.40	-.47
160	.38	.34	.25	-.25	-.45	-.57	-.74
161	-.51	-.43	-.42	-.48	-.49	-.51	-.55
162	.33	.30	-.15	-.50	-.68	-.74	-.84
163	-.62	-.49	-.44	-.42	-.43	-.45	-.45
164	.29	.19	-.31	-.46	-.53	-.57	-.71
165	-.62	-.47	-.31	-.27	-.28	-.26	-.29
166	.24	.11	-.25	-.40	-.47	-.51	-.66
167	.04	-.02	0	0	-.02	-.06	-.21
168	.11	.11	.13	.13	.08	.04	-.21
169	.02	.06	.06	-.19	-.30	-.38	-.58
170	.13	.13	.13	-.21	-.36	-.49	-.71
171	.11	-.04	-.08	-.17	-.40	-.47	-.58
172	.07	.09	-.13	-.50	-.57	-.64	-.76
173	0	.06	-.08	-.19	-.26	-.32	-.45
174	.09	.09	-.15	-.31	-.40	-.47	-.58
175	-.69	-.11	-.13	-.23	-.28	-.32	-.45
176	-.09	.06	.02	-.23	-.32	-.40	-.58

Note: A line has been drawn through the pressure coefficients for which the data are doubtful.

TABLE 36.– CONTINUED

(b) Vertical tail

Orifice No. \ α	4.02	8.17	16.51	24.83	26.88	28.92	32.90
201	-0.04	-0.11	-0.19	-0.32	-0.38	-0.45	-0.65
202	0	-.02	-.08	-.32	-.34	-.38	-.62
203	-.11	-.15	-.23	-.40	-.47	-.55	-.78
204	~~.09~~	~~.11~~	~~.17~~	~~.19~~	~~.19~~	~~.19~~	~~.14~~
205	-.09	-.13	-.21	-.40	-.49	-.57	-.78
206	~~.15~~	~~.21~~	~~.31~~	~~.34~~	~~.36~~	~~.36~~	~~.38~~
207	-.04	-.13	-.23	-.43	-.49	-.55	-.76
208	-.06	-.09	-.19	-.45	-.49	-.53	-.78
209	-.17	-.17	-.29	-.45	-.49	-.51	-.70
210	0	-.04	-.11	-.28	-.32	-.38	-.59
211	-.15	-.17	-.27	-.43	-.49	-.53	-.76
212	-.06	-.09	-.15	-.57	-.40	-.47	-.73
213	-.17	-.21	-.29	-.47	-.53	-.62	-.84
214	-.06	-.09	-.17	-.38	-.45	-.53	-.84
215	-.11	-.15	-.21	-.40	-.45	-.53	-.73
216	~~-.09~~	~~-.11~~	~~-.19~~	~~-.45~~	~~-.47~~	~~-.53~~	~~-.84~~
217	-.21	-.23	-.29	-.40	-.45	-.47	-.62
218	.04	0	-.04	-.21	-.23	-.32	-.49
219	-.19	-.21	-.27	-.45	-.49	-.57	-.78
220	-.04	-.06	-.13	-.32	-.40	-.49	-.73
221	-.21	-.23	-.29	-.51	-.60	-.68	-.89
222	-.06	-.09	-.15	-.40	-.51	-.62	-.86
223	-.21	-.23	-.29	-.51	-.55	-.66	-.84
224	-.06	-.09	-.15	-.40	-.51	-.62	-.81
225	-.21	-.21	-.23	-.32	-.36	-.38	-.54
226	-.02	-.04	-.06	-.17	-.21	-.26	-.41
227	-.06	-.06	-.11	-.23	-.28	-.36	-.57
228	-.02	0	-.02	-.17	-.23	-.30	-.51

Note: Lines have been drawn through the pressure coefficients for which the data are doubtful.

TABLE 36.- CONTINUED

(b) Vertical tail (Concluded)

Orifice No. \ α	4.02	8.17	16.51	24.83	26.88	28.92	32.90
229	~~0.15~~	~~0.19~~	~~0.29~~	~~0.34~~	~~0.34~~	~~0.36~~	~~0.38~~
230	.04	.04	0	-.19	-.28	-.36	-.59
231	-.06	-.06	-.11	-.28	-.34	-.43	-.62
232	.06	.06	.02	-.19	-.28	-.36	-.54
233	-.20	-.19	-.21	-.28	-.30	-.34	-.46
234	-.04	-.04	-.04	-.17	-.19	-.23	-.38
235	-.06	-.06	-.08	-.19	-.23	-.28	-.46
236	-.04	-.06	-.11	-.21	-.26	-.30	-.46
237	.02	0	-.02	-.17	-.23	-.32	-.57
238	.09	.09	.04	-.11	-.19	-.26	-.49
239	-.02	-.02	-.06	-.21	-.28	-.36	-.57
240	.06	.06	.02	-.15	-.23	-.30	-.49
241	-.19	-.17	-.17	-.26	-.28	-.32	-.46
242	-.04	-.04	-.06	-.17	-.19	-.23	-.38
243	-.02	-.02	-.04	-.15	-.19	-.23	-.41
244	.02	0	-.04	-.15	-.17	-.21	-.35
245	.02	.02	.02	-.15	-.21	-.30	-.51
246	.11	.09	.06	-.11	-.17	-.23	-.46
247	0	0	-.02	-.17	-.26	-.30	-.51
248	.11	.11	.06	-.11	-.17	-.23	-.41
249	-.09	-.09	-.11	-.19	-.21	-.23	-.38
250	-.06	-.06	-.08	-.17	-.19	-.23	-.38
251	.11	.11	.06	-.04	-.09	-.13	-.30
252	.13	.13	.08	-.02	-.06	-.11	-.27
253	.04	.09	.06	-.06	-.13	-.19	-.41
254	.15	.15	.11	-.02	-.09	-.15	-.35
255	.09	.06	.06	-.09	-.15	-.19	-.41
256	.15	.15	.11	-.04	-.11	-.17	-.35

Note: A line has been drawn through the pressure coefficients for which the data are doubtful.

TABLE 36.- CONTINUED

(c) Fuselage

Orifice No. \ α	4.02	8.17	16.51	24.83	26.88	28.92	32.90
301	0.16	0.06	-0.19	-0.83	-1.00	-1.04	-1.08
302	.20	.11	-.17	-.63	-.80	-.94	-1.11
303	.26	.21	-.02	-.33	-.41	-.51	-.66
304	.37	.40	.42	.40	.39	.38	.34
305	.39	.51	.65	.79	.85	.87	.89
306	~~.28~~	~~.34~~	~~.35~~	~~.34~~	~~.33~~	~~.32~~	~~-.29~~
307	.28	.28	.06	-.23	-.33	-.40	-.55
308	.18	.11	-.19	-.72	-1.02	-1.15	-1.16
309	.04	0	-.13	-.21	-.24	-.26	-.32
310	.04	0	-.19	-.40	-.48	-.51	-.63
311	.07	.04	-.21	-.55	-.67	-.74	-.95
312	.16	.19	.13	.04	.02	0	-.11
313	.26	.34	.44	.60	.63	.87	.68
314	.16	.19	.11	-.04	-.11	-.15	-.24
315	.11	.09	-.13	-.45	-.54	-.64	-.84
316	.07	.02	-.19	-.45	-.52	-.62	-.76
317	-.02	-.04	-.23	-.45	-.50	-.55	-.63
318	-.02	-.04	-.23	-.60	-.59	-.64	-.84
319	.02	.04	.17	.19	.22	.23	.26
320	.02	0	-.23	-.64	-.70	-.68	-.61
321	.02	.09	.15	.15	.16	.15	.16
322	-.04	-.02	-.19	-.40	-.52	-.60	-.76
323	-.07	-.06	-.25	-.47	-.52	-.60	-.68
324	-.18	-.19	-.29	-.43	-.46	-.47	-.50
325	-.13	-.06	0	.02	.02	.06	.08
326	-.09	-.04	-.04	-.26	-.30	-.21	-.29
327	-.35	-.36	-.42	-.45	-.46	-.45	-.45
328	-.09	-.15	-.35	-.64	-.72	-.53	-.84
329	-.02	.04	.13	.28	.30	.34	.42
330	0	.04	0	0	-.04	-.04	0
331	.07	.04	-.04	-.15	-.20	-.21	-.32
332	-.09	-.11	-.25	-.77	-.87	-.98	-1.16
333	-.26	-.17	-.02	.11	.13	.17	.21
334	-.41	-.28	-.11	.02	.07	.09	.11
335	-.02	-.04	-.21	-.53	-.39	-.77	-.97
336	.09	.11	-.02	-.26	-.33	-.47	-.68

Note: A line has been drawn through the pressure coefficients for which the data are doubtful.

TABLE 36.– CONTINUED

(c) Fuselage (Concluded)

Orifice No. \ α	4.02	8.17	16.51	24.83	26.88	28.92	32.90
337	-0.20	-0.13	-0.04	0.02	0.07	0.09	0.08
338	-.18	-.09	-.02	.06	.09	.11	.13
339	.09	.11	.02	-.15	-.22	-.32	-.50
340	~~2.35~~	~~2.32~~	~~2.23~~	~~2.26~~	~~2.26~~	~~2.26~~	~~2.66~~
341	-.11	-.06	-.04	.02	.02	.02	0
342	-.07	-.02	.02	.06	.09	.09	.05
343	-.20	-.17	-.35	-.47	-.52	-.57	-.71
344	-.11	-.09	-.15	-.34	-.44	-.53	-.71
345	-.22	-.17	-.17	-.19	-.20	-.23	-.32
346	-.18	-.15	-.15	-.15	-.18	-.17	-.24
347	-.09	-.04	-.02	0	0	.02	-.03
348	-.04	0	.02	.06	.07	.06	0
349	-.04	0	.02	.06	.07	.06	0
350	.02	.04	.02	-.04	-.09	-.11	-.21
351	-.04	-.02	-.04	-.04	-.04	-.09	-.18
352	-.09	-.06	-.13	-.17	-.20	-.23	-.34
353	.02	.04	.06	.13	.13	.11	.03
354	0	.04	.02	.04	.02	-.02	-.16
355	0	.02	.02	-.04	-.07	-.09	-.24
356	.02	.04	.02	-.04	-.07	-.09	-.24
357	.04	.06	.02	-.04	-.07	-.11	-.24
358	~~.33~~	~~.34~~	~~.29~~	~~.21~~	~~.20~~	~~.17~~	~~.05~~
359	-.02	0	-.02	-.04	-.09	-.11	-.16
360	-.07	-.06	-.11	-.15	-.20	-.26	-.34
361	-.13	-.11	-.19	-.23	-.26	-.26	-.32
362	-.04	-.02	-.04	-.09	-.11	-.17	-.32
363	0	.02	.02	-.02	-.04	-.09	-.13
364	.02	.04	.04	.04	.02	0	-.11
365	.04	.06	.04	.04	.02	0	-.11
366	-.07	-.11	-.25	-.70	-.80	-1.13	-1.39
367	.18	.23	.25	.38	.41	.43	.45
368	0	.09	.27	.45	.50	.51	.55
369	.13	.21	.35	.53	.57	.62	.68
370	.16	.23	.38	.55	.59	.62	.68
371	-.18	-.17	-.02	.26	.30	.40	.55
372	-.18	-.06	.13	.23	.28	.32	.34

Note: A line has been drawn through the pressure coefficients for which the data are doubtful.

TABLE 36.– CONCLUDED

(d) Fuselage-duct rakes

Tube No. \ α	4.02	8.17	16.51	24.83	26.88	28.92	32.90
401 T. H.[a]	0.98	1.00	0.98	0.87	0.83	0.75	0.66
402 St. H.[b]	-.02	-.02	0	.08	.09	.02	-.08
403 T. H.	.98	1.00	.98	.87	.83	.81	.74
404	---	---	---	---	---	---	---
405 St. H.	.11	.09	.02	.06	.06	.02	-.13
406 T. H.	.98	1.00	.96	.85	.81	.75	.69
407 T. H.	.98	1.00	.96	.83	.79	.75	.69
408 St. H.	.15	.11	.11	.13	.11	.02	-.08
409 T. H.	.98	1.00	.96	.85	.83	.77	.71
410 T. H.	.98	1.00	.98	.92	.89	.85	.80
411 St. H.	.11	.06	.08	.06	0	-.04	-.16
412 T. H.	.98	1.00	.96	.83	.79	.73	.63
413 T. H.	.98	1.00	.96	.87	.89	.87	.71
414 St. H.	-.02	-.06	-.08	-.31	-.38	-.46	-.74
415 T. H.	.98	.98	.92	.71	.62	.56	.40
416 T. H.	.98	.98	.92	.69	.02	.12	.09
417 St. H.	-.21	-.26	-.23	-.40	-.43	-.46	-.47
418 T. H.	.96	.89	.67	.48	.30	0	-.43
501 T. H.	.77	.77	.60	.46	.40	.35	.23
502 St. H.	.72	.70	.56	.42	.40	.33	.21
503 T. H.	.79	.79	.60	.46	.40	.35	.23
504 T. H.	.79	.79	.60	.46	.40	.35	.26
505 St. H.	.72	.70	.56	.42	.40	.33	.21
506 T. H.	.79	.79	.60	.46	.43	.35	.26
507 T. H.	.77	.74	.60	.46	.43	.37	.26
508 St. H.	.70	.70	.56	.42	.40	.33	.21
509 T. H.	.79	.74	.60	.46	.43	.37	.26
510 T. H.	.81	.79	.60	.46	.40	.35	.23
511 St. H.	.72	.70	.56	.42	.40	.33	.24
512 T. H.	.85	.83	.62	.46	.40	.35	.26
513	---	---	---	---	---	---	---
514 St. H.	.72	.70	.56	.42	.40	.33	.21
515 T. H.	.89	.83	.65	.48	.43	.37	.26
516 T. H.	.89	.83	.65	.48	.43	.37	.26
517 St. H.	.70	.70	.56	.42	.40	.33	.21
518	---	---	---	---	---	---	---
519 T. H.	.87	.83	.65	.46	.43	.37	.26
520 St. H.	.70	.70	.56	.42	.40	.33	.21
521 T. H.	.79	.74	.60	.46	.40	.35	.26
522 St. H.	.70	.68	.56	.42	.40	.33	.24
523 T. H.	.70	.70	.56	.42	.38	.33	.23

[a]Total head tube (coefficient given as P_t).

[b]Static head tube (coefficient given as P_s).

TABLE 37.– PRESSURE COEFFICIENTS FOR THE FLYING MOCK-UP OF THE XP-92 AIRPLANE, LANDING GEAR EXTENDED, $\beta = 0.13^{\circ}$, $\delta_e = -10^{\circ}$, $\delta_a = \mp 10^{\circ}$, $\delta_r = 0^{\circ}$

(a) Wing

Orifice No. \ α	4.02	8.17	16.51	24.83	26.88	28.92	32.90
101	0.09	0.15	0.38	0.54	0.57	0.62	0.67
102	-.13	-.26	-.51	-.88	-1.02	-1.47	-1.67
103	– –	– –	– –	– –	– –	– –	– –
104	– –	– –	– –	– –	– –	– –	– –
105	.13	.21	.34	.43	.43	.45	.44
106	-.21	-.43	-1.00	-3.42	-3.28	-2.51	-1.67
107	.19	.23	-.02	-.19	-.21	-.19	-.19
108	-.34	-.77	-2.19	-2.81	-2.62	-2.26	-1.64
109	.06	.13	.04	.40	.45	.26	.50
110	-.17	-.26	-.43	-.70	-.81	-.91	-1.06
111	.04	.13	.30	.45	.47	.51	.56
112	-.21	-.34	-.62	-1.74	-1.89	-1.77	-1.53
113	.09	.15	.28	.38	.38	.40	.42
114	-.30	-.51	-1.21	-2.04	-1.92	-1.64	-1.36
115	.15	.19	.04	.04	.02	.02	0
116	-.40	-.85	-3.38	-1.72	-1.66	-1.45	-1.25
117	-.51	-.40	-.13	.02	.04	.06	.14
118	-.17	-.23	-.38	-.64	-.68	-.68	-.83
119	-.38	-.36	-.15	0	.02	.06	.11
120	-.19	-.28	-.43	-.74	-.85	-.94	-1.08
121	-.06	-.02	.06	.13	.11	.13	.11
122	-.28	-.34	-.55	-1.53	-1.53	-1.40	-1.31
123	0	.06	.21	.30	.32	.34	.36
124	-.30	-.51	-2.34	-1.45	-1.40	-1.26	-1.19
125	.09	.13	.21	.23	.21	.21	.22
126	-.40	-.81	-2.21	-1.26	-1.21	-1.11	-1.08
127	-.13	-.13	.02	.11	.13	.13	.17
128	-.19	-.26	-.34	-.57	-.60	-.62	-.81
129	-.13	-.09	.04	.13	.17	.17	.19
130	-.17	-.26	-.36	-.70	-.79	-.85	-1.00
131	-.09	-.04	.11	.19	.21	.23	.22
132	-.23	-.21	-.45	-1.15	-1.17	-1.11	-1.11
133	-.04	.04	.21	.32	.34	.36	.39
134	-.30	-.47	-1.47	-1.02	-1.02	-.96	-.97
135	.04	.17	.28	.32	.32	.34	-.02
136	-.47	-.79	-1.13	-.89	-.89	-.85	-.94
137	-.04	-.04	.02	.09	.09	.06	.02
138	-.09	-.13	-.17	-.33	-.36	-.47	-.67

TABLE 37.- CONTINUED

(a) Wing (Concluded)

Orifice No. \ α	4.02	8.17	16.51	24.83	26.88	28.92	32.90
139	-0.04	-0.02	0.06	0.11	0.11	0.11	0.11
140	-.06	-.11	-.21	-.54	-.64	-.72	-.92
141	-.06	-.02	.06	.04	.11	.11	.08
142	-.09	-.13	-.30	-.88	-.91	-.89	-.97
143	-.02	.04	.13	.19	.19	.19	.22
144	-.26	-.38	-.81	-.79	-.81	-.79	-.83
145	.02	.11	.17	.21	.21	.21	.22
146	-.11	-.60	-.72	-.69	-.74	-.72	-.81
147	-.02	0	.09	.13	.13	.11	.08
148	-.09	-.11	-.15	-.29	-.34	-.43	-.67
149	~~-.02~~	~~-.04~~	~~-.06~~	~~-.04~~	~~-.04~~	~~-.04~~	~~.14~~
150	-.09	-.11	-.21	-.61	-.68	-.79	-.94
151	.21	.26	.36	.44	.47	.47	.50
152	-.06	-.17	-.51	-.94	-.98	-.94	-1.00
153	-.15	-.19	.57	.63	.64	.62	.67
154	-.11	-.47	-.83	-.77	-.81	-.81	.86
155	.11	.17	.21	.27	.28	.28	.31
156	-.15	-.57	-.68	-.67	-.70	-.72	-.78
157	-.02	-.02	.04	.06	.06	.06	0
158	-.04	-.06	-.11	-.27	-.30	-.40	-.61
159	0	.02	.06	.06	.06	.06	0
160	-.02	-.06	-.15	-.50	-.60	-.70	-.86
161	0	-.02	.02	.02	.02	.02	0
162	-.06	-.09	-.26	-.81	-.85	-.83	-.92
163	-.02	.02	.02	.06	.06	.09	.08
164	-.17	-.28	-.70	-.67	-.72	-.70	-.78
165	-.02	.06	.11	.15	.15	.15	.17
166	-.30	-.40	-.60	-.63	-.66	-.68	-.78
167	.06	.06	.09	.08	.06	.02	-.47
168	.09	.09	.09	.06	.02	.04	-.39
169	.09	.06	.04	-.13	-.19	-.28	-.50
170	.09	.09	.02	-.27	-.34	-.49	-.75
171	.11	.09	-.11	-.33	-.36	-.36	-.61
172	.09	.04	-.11	-.67	-.70	-.72	-.83
173	.11	.09	-.21	-.25	-.26	-.28	-.33
174	.06	0	-.51	-.58	-.62	-.62	-.75
175	-.04	-.21	-.26	-.29	-.30	-.32	-.39
176	-.11	-.57	-.23	-.52	-.55	-.60	-.69

Note: A line has been drawn through the pressure coefficients for which the data are doubtful.

TABLE 37.– CONTINUED

(b) Vertical tail

Orifice No. \ α	4.02	8.17	16.51	24.83	26.88	28.92	32.90
201	0.04	-0.02	-0.11	-0.23	-0.30	-0.49	-0.70
202	-.16	-.17	-.23	-.42	-.45	-.38	-.59
203	-.04	-.09	-.17	-.25	-.43	-.55	-.81
204	~~.04~~	~~.09~~	~~.17~~	~~.19~~	~~.19~~	~~.18~~	~~.14~~
205	-.09	-.09	-.17	-.40	-.47	-.62	-.81
206	~~.13~~	~~.40~~	~~.30~~	~~.33~~	~~.36~~	~~.38~~	~~.38~~
207	-.04	-.09	-.19	-.40	-.47	-.60	-.78
208	-.13	-.17	-.28	-.48	-.53	-.53	-.81
209	-.04	-.06	-.17	-.33	-.36	-.47	-.73
210	-.20	-.21	-.28	-.40	-.43	-.47	-.54
211	-.07	-.11	-.19	-.35	-.40	-.51	-.73
212	-.20	-.21	-.30	-.44	-.49	-.53	-.70
213	-.11	-.13	-.21	-.42	-.49	-.58	-.84
214	-.20	-.21	-.30	-.46	-.51	-.58	-.81
215	-.04	-.06	-.15	-.35	-.43	-.49	-.73
216	~~-.22~~	~~-.23~~	~~-.32~~	~~-.50~~	~~-.53~~	~~-.62~~	~~-.81~~
217	0	-.02	-.11	-.23	-.28	-.36	-.59
218	-.24	-.23	-.32	-.35	-.38	-.42	-.49
219	.09	-.09	-.17	-.35	-.43	-.53	-.73
220	-.22	-.23	-.28	-.44	-.47	-.56	-.73
221	-.09	-.11	-.19	-.42	-.53	-.64	-.86
222	-.24	-.26	-.32	-.50	-.55	-.22	-.89
223	-.09	-.11	-.15	-.42	-.49	-.60	-.78
224	-.24	-.26	-.32	-.52	-.57	-.71	-.81
225	-.09	-.09	-.13	-.23	-.28	-.33	-.49
226	-.22	-.21	-.21	-.27	-.28	-.33	-.46
227	-.02	-.04	-.06	-.19	-.26	-.33	-.49
228	-.09	-.09	-.11	-.23	-.26	-.36	-.54

Note: Lines have been drawn through the pressure coefficients for which the data are doubtful.

TABLE 37.– CONTINUED

(b) Vertical tail (Concluded)

Orifice No. \ α	4.02	8.17	16.51	24.83	26.88	28.92	32.90
229	~~0.13~~	~~0.19~~	~~0.30~~	~~0.33~~	~~0.36~~	~~0.38~~	~~0.38~~
230	-.07	-.06	-.11	-.25	-.30	-.42	-.65
231	.04	.04	-.02	-.19	-.26	-.36	-.51
232	-.09	-.09	-.04	-.29	-.34	-.47	-.62
233	-.07	-.04	-.09	-.17	-.21	-.27	-.41
234	-.22	-.21	-.21	-.25	-.28	-.31	-.43
235	0	-.02	-.04	-.15	-.19	-.24	-.41
236	-.13	-.15	-.17	-.25	-.28	-.36	-.49
237	.07	.06	.02	-.13	-.21	-.29	-.46
238	0	-.02	-.04	-.17	-.21	-.31	-.54
239	.07	.09	.02	-.13	-.21	-.36	-.70
240	-.07	-.04	-.09	-.25	-.30	-.42	-.57
241	-.09	-.09	-.11	-.19	-.21	-.27	-.41
242	-.20	-.19	-.17	-.23	-.23	-.29	-.41
243	0	0	-.02	-.11	-.15	-.22	-.35
244	-.04	-.04	-.09	-.17	-.19	-.24	-.38
245	.07	.04	.02	-.13	-.19	-.27	-.46
246	.02	.02	-.02	-.15	-.19	-.29	-.49
247	.07	.06	.04	-.11	-.17	-.24	-.41
248	0	0	-.04	-.19	-.21	-.33	-.49
249	-.07	-.06	-.09	-.17	-.19	-.22	-.32
250	-.11	-.13	-.13	-.19	-.21	-.24	-.38
251	.09	.09	.28	-.04	-.06	-.13	-.27
252	.09	.09	.06	-.04	-.06	-.13	-.27
253	.09	.09	.06	-.06	-.13	-.20	-.38
254	.11	.11	.09	-.04	-.09	-.16	-.35
255	.09	.09	.06	-.08	-.13	-.20	-.38
256	.09	.09	.06	-.06	-.13	-.20	-.38

Note: A line has been drawn through the pressure coefficients for which the data are doubtful.

TABLE 37.– CONTINUED

(c) Fuselage

Orifice No. \ α	4.02	8.17	16.51	24.83	26.88	28.92	32.90
301	0.17	0.04	-0.17	-0.81	-0.98	-1.07	-1.11
302	.21	.09	-.15	-.63	-.80	-.96	-1.08
303	.28	.20	0	-.31	-.44	-.50	-.68
304	.38	.38	.44	.42	.39	.39	.32
305	.43	.49	.65	.83	.85	.87	.92
306	~~.32~~	~~.32~~	~~.38~~	~~.35~~	~~.33~~	~~.30~~	~~.27~~
307	.32	.26	.08	-.21	-.35	-.41	-.59
308	.19	.13	-.17	-.71	-1.00	-1.15	-2.32
309	.06	0	-.11	-.21	-.24	-.26	-.30
310	.06	0	-.17	-.38	-.46	-.52	-.62
311	.09	0	-.19	-.52	-.67	-.76	-.97
312	.17	.16	.17	.06	.02	-.02	-.11
313	.28	.33	.46	.61	.63	.65	.70
314	.17	.18	.13	-.02	-.11	-.13	-.27
315	.13	.04	-.11	-.42	-.57	-.65	-.86
316	.11	0	-.17	-.42	-.54	-.59	-1.05
317	0	-.07	-.21	-.42	-.50	-.57	-.92
318	0	-.07	-.21	-.60	-.59	-.65	-.86
319	.04	.02	.17	.21	.22	.20	.27
320	.02	-.02	-.21	-.66	-.68	-.70	-.59
321	.06	.09	.17	.17	.15	.16	.14
322	0	-.04	-.19	-.40	-.52	-.59	-.78
323	.02	-.09	-.23	-.47	-.54	-.59	-.70
324	-.15	-.22	-.27	-.40	-.46	-.48	-.54
325	-.11	-.11	0	.04	.02	.04	.05
326	-.06	-.07	-.02	-.21	-.28	-.24	-.32
327	-.32	-.39	-.40	-.45	-.46	-.46	-.46
328	-.06	-.18	-.33	-.64	-.50	-.78	-.86
329	0	.02	.15	.30	.30	.35	.43
330	.02	.02	.02	.02	-.02	-.04	-.04
331	.06	.02	-.02	-.11	-.18	-.22	-.32
332	-.17	-.24	-.40	-.81	-.93	-1.07	-1.22
333	-.23	-.18	0	.13	.16	.18	.19
334	-.43	-.35	-.13	-.02	-.02	.04	.05
335	-.19	-.24	-.38	-.60	-.67	-.80	-1.03
336	-.15	-.16	-.21	-.43	-.54	-.67	-.86

Note: A line has been drawn through the pressure coefficients for which the data are doubtful.

TABLE 37.– CONTINUED

(c) Fuselage (Concluded)

Orifice No. \ α	4.02	8.17	16.51	24.83	26.88	28.92	32.90
337	-0.17	-0.16	-0.02	0.04	0.04	0.04	0.08
338	-.21	-.20	-.09	0	0	.02	.03
339	-.06	-.09	-.11	-.32	-.41	-.57	-.68
340	~~2.28~~	~~2.31~~	~~2.23~~	~~2.23~~	~~2.28~~	~~2.28~~	~~2.70~~
341	-.06	-.09	0	.02	.02	.02	0
342	-.19	-.20	-.11	-.11	-.13	-.13	-.16
343	.13	.09	.08	0	-.13	-.22	-.46
344	.11	.07	.02	-.13	-.24	-.30	-.51
345	-.02	-.04	.04	.06	.04	.04	-.03
346	-.02	-.02	.04	.06	.04	.04	-.03
347	-.06	-.04	0	0	0	0	-.03
348	-.15	-.18	-.13	-.13	-.18	-.20	-.24
349	-.19	-.20	-.15	-.17	-.22	-.22	-.30
350	.04	.02	.04	-.02	-.07	-.09	-.22
351	.02	0	.04	-.02	-.09	-.13	.04
352	.04	.13	.06	.06	.04	-.07	-.16
353	-.09	-.11	-.06	-.08	-.13	-.13	-.19
354	-.06	-.11	-.08	-.13	-.22	-.24	-.32
355	-.04	-.04	-.02	-.02	-.06	-.09	.08
356	.04	.02	.04	-.04	-.09	-.13	-.22
357	.06	.04	.04	-.04	-.09	-.13	-.24
358	.34	.32	.30	.23	.20	.16	.05
359	~~.02~~	~~0~~	~~.02~~	~~-.02~~	~~-.07~~	~~-.06~~	~~-.14~~
360	-.04	-.04	-.04	-.06	-.13	-.18	-.30
361	-.11	-.18	-.23	-.34	-.39	-.39	-.43
362	-.06	-.11	-.15	-.23	-.30	-.35	-.43
363	0	-.04	-.02	-.09	-.13	-.13	-.19
364	0	-.04	0	-.02	-.09	-.11	-.19
365	.06	.04	.04	.04	0	-.02	-.11
366	-.11	-.20	-.32	-.74	-.91	-1.00	-1.41
367	.16	.20	.26	.38	.39	.41	.43
368	.02	.11	.30	.47	.50	.52	.57
369	.15	.20	.36	.55	.57	.61	.68
370	.17	.22	.40	.57	.59	.63	.70
371	-.13	-.22	.06	.34	.41	.48	.57
372	-.11	-.04	.15	.32	.33	.35	.38

Note: Lines have been drawn through the pressure coefficients for which the data are doubtful.

TABLE 37.- CONCLUDED

(d) Fuselage-duct rakes

Tube No. \ α	4.02	8.17	16.51	24.83	26.88	28.92	32.90
401 T. H.[a]	0.98	0.98	0.98	0.89	0.83	0.79	0.59
402 St. H.[b]	0	0	0	.06	.02	0	-.08
403 T. H.	.98	.98	.98	.89	.83	.81	.59
404	---	---	---	---	---	---	---
405 St. H.	.11	.09	.02	.04	.02	0	-.14
406 T. H.	.98	.98	.98	.85	.81	.74	.59
407 T. H.	.98	.98	.96	.85	.79	.74	.59
408 St. H.	.13	.11	.09	.13	.06	.02	-.08
409 T. H.	.98	.98	.98	.87	.83	.77	.62
410 T. H.	.98	.98	.98	.92	.89	.85	.73
411 St. H.	.09	.06	.06	.04	-.04	-.08	-.19
412 T. H.	.98	.98	.96	.85	.79	.72	.57
413 T. H.	.98	.98	.96	.87	.87	.85	.59
414 St. H.	-.02	-.09	-.09	-.33	-.45	-.51	-.76
415 T. H.	.98	.98	.91	.70	.62	.53	.38
416 T. H.	.98	.96	.94	.66	-.04	.11	.08
417 St. H.	-.23	-.23	-.26	-.46	-.53	-.53	-.49
418 T. H.	.96	.89	.66	.47	.26	-.02	-.43
501 T. H.	.77	.74	.60	.44	.40	.34	.22
502 St. H.	.72	.70	.55	.42	.34	.34	.19
503 T. H.	.79	.56	.62	.44	.40	.34	.22
504 T. H.	.79	.56	.62	.46	.40	.36	.22
505 St. H.	.70	.70	.55	.42	.34	.34	.19
506 T. H.	.79	.56	.62	.46	.40	.36	.24
507 T. H.	.77	.52	.62	.46	.40	.36	.22
508 St. H.	.70	.68	.55	.42	.34	.32	.19
509 T. H.	.79	.53	.62	.46	.40	.36	.24
510 T. H.	.81	.57	.62	.43	.38	.34	.22
511 St. H.	.70	.70	.55	.42	.34	.34	.19
512 T. H.	.85	.83	.64	.46	.40	.34	.22
513	---	---	---	---	---	---	---
514 St. H.	.70	.70	.55	.42	.34	.32	.19
515 T. H.	.89	.83	.66	.47	.40	.36	.22
516 T. H.	.89	.83	.66	.47	.40	.36	.22
517 St. H.	.70	.68	.55	.42	.34	.34	.19
518	---	---	---	---	---	---	---
519 T. H.	.85	.83	.64	.46	.40	.36	.22
520 St. H.	.70	.68	.57	.42	.34	.34	.19
521 T. H.	.79	.72	.62	.43	.40	.34	.22
522 St. H.	.70	.68	.55	.42	.34	.32	.22
523 T. H.	.70	.70	.60	.40	.36	.32	.22

[a]Total head tube (coefficient given as P_t).

[b]Static head tube (coefficient given as P_s).

TABLE 38.– PRESSURE COEFFICIENTS FOR THE FLYING MOCK-UP OF THE XP-92 AIRPLANE, LANDING GEAR EXTENDED, $\beta = -10.06^{\circ}$ $\delta_e = -10^{\circ}$, $\delta_a = \pm 10^{\circ}$, $\delta_r = -10^{\circ}$

(a) Wing

Orifice No. \ α	4.02	8.18	16.52	24.83	26.84	28.84	32.87
101	0.06	0.18	0.40	0.61	0.61	0.64	0.71
102	-.10	-.20	-.49	-1.09	-1.02	-.96	-1.03
103	-	-	-	-	-	-	-
104	-	-	-	-	-	-	-
105	.14	.29	.47	.59	.59	.62	.66
106	-.20	-.41	-.96	-2.20	-1.04	-.96	-1.03
107	.24	.39	.30	.22	.33	.32	.24
108	-.33	-.78	-1.98	-2.00	-1.04	-.96	-1.00
109	.08	.16	.32	.48	.48	.51	.58
110	-.04	-.10	-.32	-.85	-1.00	-.94	-.95
111	.04	.14	.34	.50	.50	.53	.58
112	-.14	-.24	-.51	-1.41	-1.00	-.96	-.97
113	.10	.22	.43	.54	.52	.55	.58
114	-.20	-.45	-1.00	-1.26	-1.00	-.89	-.95
115	.20	.37	.32	.39	.39	.40	.34
116	-.31	-.78	-2.06	-1.20	-.76	-.87	-.92
117	-.57	-.45	-.21	0	-.02	.04	.13
118	0	-.06	-.17	-.67	-.89	-.77	-.92
119	-.45	-.37	-.21	-.02	-.02	.04	.08
120	-.02	-.08	-.32	-.87	-.96	-.83	-.92
121	.02	.03	.28	.37	.35	.40	.42
122	-.10	-.20	-.47	-1.11	-.96	-.83	-.92
123	.04	.14	.34	.44	.41	.45	.50
124	-.18	-.39	-1.17	-.98	-.89	-.74	-.84
125	.06	.24	.43	.44	.41	.45	.42
126	-.27	-.65	-1.94	-.91	-.83	-.70	-.79
127	-.27	-.20	-.09	.02	.02	.02	.08
128	.06	.02	-.09	-.54	-.67	-.66	-.76
129	-.24	-.18	-.04	.04	0	.04	.11
130	.06	.04	-.19	-.74	-.83	-.70	-.82
131	-.29	-.20	-.02	.09	.09	.11	.16
132	-.02	-.10	-.40	-.87	-.78	-.70	-.79
133	-.22	-.08	.15	.26	.20	.28	.34
134	-.08	-.06	-.87	-.76	-.67	-.64	-.71
135	-.14	-.10	.32	.39	.39	.40	.39
136	-.14	-.45	-.77	-.72	-.67	-.62	-.71
137	-.39	-.37	-.30	-.28	-.38	-.38	-.39
138	.31	.27	.26	-.16	-.57	-.60	-.68

TABLE 38.- CONTINUED

(a) Wing (Concluded)

Orifice No. \ α	4.02	8.18	16.52	24.83	26.84	28.84	32.87
139	-0.41	-0.39	-0.32	-0.35	-0.44	-0.43	-0.39
140	.45	.31	.17	-.52	-.70	-.66	-.76
141	-.53	-.49	-.43	-.43	-.50	-.49	-.42
142	.35	.31	-.15	-.68	-.70	-.66	-.79
143	-.39	-.31	-.23	-.21	-.26	-.23	-.21
144	.24	.16	-.51	-.60	-.59	-.62	-.71
145	-.45	-.27	-.11	-.02	-.07	-.04	0
146	.24	.04	-.47	-.53	-.54	-.60	-.71
147	-.84	-.86	-.81	-.91	-1.15	-1.21	-1.26
148	.06	.06	.09	.09	-.11	-.13	-.21
149	~~-.39~~	~~-.37~~	~~-.45~~	~~-.62~~	~~-.80~~	~~-.81~~	~~-.87~~
150	-.31	-.27	-.43	-.60	-.72	-.68	-.76
151	-1.49	-1.51	-1.66	-1.81	-2.04	-2.02	-1.97
152	-.53	-.47	-.51	-.65	-.67	-.66	-.76
153	-1.61	-1.47	-1.38	-1.41	-1.59	-1.55	-1.47
154	-.59	-.49	-.47	-.57	-.61	-.64	-.71
155	-.73	-.49	-.32	-.24	-.30	-.26	-.18
156	.35	.13	-.38	-.54	-.54	-.60	-.71
157	-.31	-.30	-.28	-.33	-.48	-.53	-.58
158	.27	.24	.26	-.07	-.46	-.57	-.68
159	-.35	-.35	-.32	-.44	-.57	-.57	-.61
160	.35	.31	.21	-.50	-.67	-.66	-.76
161	-.49	-.47	-.43	-.52	-.63	-.62	-.61
162	.31	.29	-.26	-.65	-.67	-.66	-.79
163	-.55	-.47	-.40	-.41	-.52	-.49	-.47
164	.27	.18	-.32	-.54	-.57	-.60	-.71
165	-.63	-.51	-.32	-.24	-.35	-.32	-.26
166	.22	.10	-.23	-.57	-.59	-.60	-.71
167	-.02	-.02	0	-.07	-.35	-.45	-.53
168	.08	.10	.15	-.02	-.41	-.53	-.63
169	.02	.02	.04	-.37	-.57	-.57	-.66
170	.12	.12	.13	-.44	-.65	-.64	-.76
171	-.08	-.04	-.15	-.41	-.57	-.57	-.66
172	.06	.06	-.17	-.50	-.65	-.66	-.79
173	-.10	.02	-.09	-.22	-.39	-.43	-.47
174	.02	.10	-.15	-.41	-.57	-.60	-.74
175	-.61	-.20	-.11	-.20	-.33	-.32	-.39
176	-.14	.02	0	-.18	-.33	-.38	-.45

Note: A line has been drawn through the pressure coefficients for which the data are doubtful.

TABLE 38.– CONTINUED

(b) Vertical tail

Orifice No. \ α	4.02	8.18	16.52	24.83	26.84	28.84	32.87
201	-1.47	-1.27	-1.04	-1.33	-1.00	-0.70	-0.71
202	.04	0	-.02	-.02	-.41	-.79	-1.24
203	-.73	-.65	-.64	-.89	-.84	-.72	-.71
204	~~-.06~~	~~.10~~	~~.19~~	~~.22~~	~~.14~~	~~.13~~	~~.08~~
205	-.43	-.45	-.51	-.70	-.69	-.68	-.74
206	~~-.08~~	~~.14~~	~~.28~~	~~.33~~	~~.33~~	~~.34~~	~~.37~~
207	-.41	-.41	-.49	-.65	-.69	-.68	-.74
208	.22	.14	-.19	-.74	-.38	-.83	-1.00
209	-1.33	-1.29	-1.35	-2.00	-1.31	-1.15	-.97
210	.10	.02	-.11	-.26	-.31	-.53	-.82
211	-.61	-.65	-.72	-.91	-.88	-.91	-.89
212	.20	.14	.04	-.09	-.45	-.60	-.89
213	-.43	-.47	-.62	-.76	-.80	-.85	-.89
214	.16	.12	.04	-.18	-.61	-.68	-.89
215	-.31	-.37	-.43	-.63	-.65	-.72	-.79
216	~~.10~~	~~.08~~	~~-.11~~	~~-.57~~	~~-.67~~	~~-.70~~	~~-.89~~
217	-2.37	-2.20	-1.62	-2.00	-2.25	-1.66	-1.11
218	.16	.12	0	-.11	-.10	-.21	-.63
219	-.45	-.45	-.49	-.65	-.71	-.85	-.87
220	.10	.10	.02	-.13	-.37	-.55	-.82
221	-.33	-.34	-.49	-.65	-.67	-.77	-.84
222	.06	.04	-.02	-.28	-.57	-.70	-.82
223	-.33	-.39	-.47	-.63	-.65	-.74	-.82
224	.04	.02	-.11	-.35	-.55	-.64	-.79
225	-.49	-.42	-.45	-.59	-.67	-.62	-.66
226	-.06	-.08	-.13	-.20	-.20	-.30	-.47
227	.02	.04	.02	-.09	-.18	-.43	-.61
228	-.14	-.16	-.19	-.33	-.37	-.53	-.68

Note: Lines have been drawn through the pressure coefficients for which the data are doubtful.

TABLE 38.– CONTINUED

(b) Vertical tail (Concluded)

Orifice No. \ α	4.02	8.18	16.52	24.33	26.84	28.84	32.87
229	~~0.08~~	~~0.14~~	~~0.28~~	~~0.33~~	~~0.33~~	~~0.34~~	~~0.39~~
230	-.18	-.18	-.21	-.44	-.49	-.64	-.76
231	.04	.02	0	-.09	-.18	-.30	-.50
232	-.08	-.10	-.13	-.39	-.39	-.55	-.68
233	-.29	-.27	-.30	-.41	-.45	-.53	-.63
234	-.08	-.10	-.15	-.22	-.24	-.36	-.47
235	-.31	-.33	-.36	-.44	-.33	-.57	-.61
236	-.35	-.37	-.47	-.52	-.53	-.57	-.55
237	.16	.16	.17	.09	-.08	-.26	-.53
238	-.20	-.22	-.28	-.46	-.49	-.60	-.74
239	.12	.14	.13	.07	-.04	-.19	-.37
240	-.24	-.24	-.23	-.44	-.33	-.51	-.66
241	-.22	-.20	-.26	-.35	-.41	-.49	-.58
242	-.10	-.10	-.15	-.22	-.24	-.34	-.45
243	-.24	-.27	-.30	-.37	-.27	-.51	-.53
244	-.20	-.22	-.30	-.37	-.35	-.43	-.53
245	.10	.10	.09	0	-.12	-.30	-.53
246	-.06	-.08	-.11	-.26	-.37	-.53	-.71
247	.10	.14	.13	0	-.10	-.26	-.42
248	-.08	-.08	-.09	-.26	-.31	-.51	-.66
249	-.14	-.16	-.21	-.28	-.35	-.45	-.55
250	-.12	-.16	-.21	-.28	-.33	-.40	-.47
251	.10	.08	.06	0	-.08	-.30	-.53
252	.06	.06	.02	-.07	-.12	-.30	-.55
253	.08	.06	.06	-.04	-.18	-.36	-.58
254	.06	.06	.06	-.07	-.20	-.43	-.66
255	.08	.10	.09	-.04	-.20	-.38	-.53
256	.06	.08	.16	-.09	-.29	-.49	-.61

Note: A line has been drawn through the pressure coefficients for which the data are doubtful.

TABLE 38.– CONTINUED

(c) Fuselage

Orifice No. \ α	4.02	8.18	16.52	24.83	26.84	28.84	32.87
301	0.04	-0.04	-0.26	-1.04	-1.09	-1.13	-1.16
302	.34	.18	-.13	-.54	-.62	-.67	-.89
303	.53	.45	.26	-.07	-.15	-.21	-.42
304	.53	.61	.70	.76	.77	.77	.74
305	.30	.37	.53	.67	.70	.71	.79
306	~~.04~~	~~.06~~	~~.06~~	~~.02~~	~~.02~~	~~0~~	~~-.05~~
307	0	-.06	-.26	-.54	-.60	-.63	-.74
308	-.02	-.10	-.43	-1.07	-1.11	-1.06	-.97
309	-.06	-.10	-.17	-.20	-.21	-.21	-.29
310	.09	-.04	-.28	-.63	-.68	-.75	-.97
311	.28	.18	-.04	-.41	-.51	-.58	-.87
312	.34	.39	.45	.46	.45	.46	.42
313	.13	.16	.28	.37	.38	.38	.42
314	-.06	-.10	-.26	-.48	-.53	-.61	-.76
315	-.06	-.10	-.28	-.61	-.68	-.75	-.97
316	-.04	-.06	-.15	-.28	-.30	-.33	-.45
317	.06	-.04	-.30	-.63	-.70	-.77	-1.00
318	.17	.10	-.06	-.39	-.47	-.54	-.74
319	.19	.22	.30	.35	.36	.38	.39
320	.17	.22	.32	.41	.43	.42	.29
321	-.06	.02	.06	.07	.06	.08	.13
322	-.15	-.18	-.40	-.50	-.57	-.63	-.84
323	-.15	-.14	-.19	-.33	-.36	-.40	-.39
324	-.09	-.16	-.32	-.52	-.57	-.56	-.66
325	-.02	.06	.17	.28	.32	.35	.45
326	-.19	-.20	-.51	-.44	-.49	-.56	-.68
327	-.47	-.49	-.55	-.57	-.51	-.52	-.55
328	-.17	-.29	-.53	-.89	-.89	-.92	-.92
329	-.09	-.04	.06	.20	.23	.25	.34
330	-.09	-.06	-.15	-.46	-.51	-.52	-.58
331	-.11	-.14	-.15	-.24	-.19	-.21	-.37
332	.06	.02	-.09	-.59	-.96	-.85	-.97
333	-.34	-.24	-.09	.07	.11	.13	.21
334	-.38	-.35	-.21	-.11	-.09	-.08	-.05
335	.06	.04	-.04	-.63	-.77	-.71	-.76
336	.11	.08	.02	-.39	-.68	-.67	-.74
337	-.21	-.18	-.09	0	0	.02	.05
338	-.15	-.12	-.04	.04	.04	.04	.08

Note: A line has been drawn through the pressure coefficients for which the data are doubtful.

TABLE 38.- CONTINUED

(c) Fuselage (Concluded)

Orifice No. \ α	4.02	8.18	16.52	24.83	26.84	28.84	32.87
339	0	0	-0.04	-0.26	-0.55	-0.63	-0.71
340	~~-.60~~	~~-.57~~	~~-.60~~	~~-.59~~	~~-.60~~	~~-.58~~	~~-.61~~
341	-.11	-.08	-.04	.02	0	0	0
342	-.04	-.04	.02	.09	.09	.08	.11
343	-.17	-.18	-.23	-.28	-.36	-.42	-.53
344	-.09	-.06	-.09	-.18	-.26	-.35	-.53
345	-.21	-.18	-.15	-.18	-.26	-.33	-.37
346	-.15	-.12	-.09	-.09	-.15	-.19	-.21
347	-.06	-.04	0	.02	0	0	0
348	-.02	0	.04	.09	.06	.06	.08
349	-.02	0	.04	.09	.06	.06	.08
350	-.04	-.04	-.04	-.04	-.15	-.29	-.61
351	-.06	-.06	-.06	-.04	-.13	-.31	-.66
352	-.06	-.04	-.04	-.09	-.19	-.35	-.50
353	.02	.06	.11	.13	.13	.13	.03
354	.02	.04	.06	.07	.04	0	-.11
355	.02	.04	.04	.04	-.02	-.06	-.18
356	.06	.06	.04	.02	-.06	-.17	-.32
357	.04	.06	.04	-.04	-.13	-.25	-.47
358	~~.28~~	~~.27~~	~~.26~~	~~.20~~	~~.15~~	~~.08~~	~~.03~~
359	-.04	-.04	-.06	-.02	-.06	-.15	-.18
360	-.06	-.06	-.13	-.16	-.21	-.33	-.47
361	-.11	-.12	-.19	-.22	-.28	-.31	-.39
362	-.04	-.06	-.09	-.11	-.21	-.29	-.45
363	.02	.02	.02	-.04	-.09	-.17	-.29
364	.06	.08	.06	.02	-.09	-.17	-.26
365	.04	.04	.04	.02	-.04	-.15	-.21
366	.02	-.04	-.17	-.52	-.96	-.96	-1.00
367	.06	.29	.17	.24	.23	.25	.26
368	-.04	.06	.23	.39	.40	.42	.50
369	.08	.16	.34	.50	.55	.58	.66
370	.11	.22	.36	.54	.57	.61	.68
371	-.15	-.04	0	.16	.17	.21	.34
372	-.15	-.04	.15	.33	.32	.33	.42

Note: Lines have been drawn through the pressure coefficients for which the data are doubtful.

TABLE 38.- CONCLUDED

(d) Fuselage-duct rakes

Tube No. \ α	4.02	8.18	16.52	24.83	26.84	28.84	32.87
401 T.H.[a]	0.86	0.84	0.83	0.70	0.65	0.58	0.45
402 St. H.[b]	-.31	-.37	-.23	-.50	-.63	-.79	-.97
403 T. H.	.94	.92	.85	.72	.67	.60	.42
404	---	---	---	---	---	---	---
405 St. H.	-.02	-.02	-.09	-.11	-.19	-.29	-.45
406 T. H.	.98	.96	.89	.74	.69	.62	.45
407 T. H.	.98	.98	.91	.76	.71	.67	.50
408 St. H.	.08	.10	.09	.04	0	-.04	-.16
409 T. H.	.98	.98	.96	.76	.73	.69	.53
410 T. H.	.98	.98	.96	.80	.77	.73	.58
411 St. H.	.06	.08	.02	-.07	-.13	-.23	-.39
412 T. H.	.98	.96	.91	.70	.67	.62	.42
413 T. H.	.98	.98	.94	.70	.54	.27	.55
414 St. H.	0	-.02	-.21	-.50	-.67	-.88	-1.11
415 T. H.	.98	.96	.85	.61	.52	.37	-.03
416 T. H.	.98	.92	.68	.43	.42	.10	-.42
417 St. H.	-.18	-.27	-.23	-.63	-.71	-.75	-.71
418 T. H.	.96	.90	.64	.41	.29	-.11	-.58
501 T. H.	.71	.67	.57	.41	.35	.31	.18
502 St. H.	.61	.61	.51	.37	.31	.25	.16
503 T. H.	.69	.69	.57	.41	.35	.31	.18
504 T. H.	.69	.69	.57	.41	.35	.31	.18
505 St. H.	.61	.61	.51	.37	.31	.25	.13
506 T. H.	.67	.69	.55	.41	.35	.31	.18
507 T. H.	.65	.65	.55	.41	.35	.31	.18
508 St. H.	.61	.61	.51	.37	.31	.25	.13
509 T. H.	.65	.63	.55	.41	.35	.29	.18
510 T. H.	.82	.78	.64	.43	.37	.31	.18
511 St. H.	.61	.61	.51	.37	.31	.25	.13
512 T. H.	.88	.63	.68	.46	.39	.35	.24
513	---	---	---	---	---	---	---
514 St. H.	.61	.61	.51	.37	.31	.25	.16
515 T. H.	.86	.84	.70	.48	.42	.35	.24
516 T. H.	.76	.78	.70	.48	.42	.35	.24
517 St. H.	.61	.61	.51	.37	.31	.25	.13
518	---	---	---	---	---	---	---
519 T. H.	.90	.82	.70	.48	.42	.35	.24
520 St. H.	.61	.61	.51	.37	.31	.25	.13
521 T. H.	.73	.67	.60	.41	.35	.29	.16
522 St. H.	.59	.61	.51	.37	.31	.25	.13
523 T. H.	.63	.59	.51	.37	.31	.25	.13

[a]Total head tube (coefficient given as P_t).

[b]Static head tube (coefficient given as P_s).

TABLE 39.- PRESSURE COEFFICIENTS FOR THE FLYING MOCK-UP OF THE XP-92 AIRPLANE, LANDING GEAR EXTENDED, $\beta = 9.98^{\circ}$, $\delta_e = 10^{\circ}$, $\delta_a = \mp 10^{\circ}$, $\delta_r = -10^{\circ}$

(a) Wing

Orifice No. \ α	4.02	8.18	16.52	24.83	26.84	28.84	32.87
101	0.02	0.06	0.38	0.57	0.60	0.64	0.65
102	-.14	-.26	-.52	-.91	-.98	-1.19	-1.51
103	---	---	---	---	---	---	---
104	---	---	---	---	---	---	---
105	.10	.12	.17	.25	.26	.26	.22
106	-.18	-.40	-1.19	-3.79	-3.17	-2.60	-2.13
107	.12	.12	-.27	-.48	-.47	-.47	-.57
108	-.32	-.74	-2.25	-2.80	-2.55	-2.21	-2.13
109	-.02	.04	.27	.25	-.30	.30	.35
110	-.24	-.32	-.50	-.82	-.81	-.85	-.97
111	0	.04	.31	.36	.38	.38	.41
112	-.24	-.33	-.52	-1.41	-1.53	-1.55	-1.59
113	.02	.06	.21	.18	.19	.19	.19
114	-.28	-.52	-2.55	-2.32	-1.94	-1.23	-1.57
115	.04	.02	-.11	-.27	-.26	-.26	-.32
116	-.40	-.92	-1.90	-1.61	-1.60	-1.43	-1.38
117	-.40	-.32	-.21	-.16	-.11	-.09	-.03
118	-.28	-.36	-.46	-.68	-.66	-.68	-.78
119	-.48	-.34	-.15	-.11	-.06	-.04	.03
120	-.30	-.38	-.52	-.86	-.85	-.89	-.97
121	-.18	-.20	-.23	-.34	-.28	-.26	-.19
122	-.28	-.40	-.48	-1.89	-1.36	-1.28	-1.35
123	-.08	-.04	.06	-.09	-.06	-.06	-.05
124	-.30	-.52	-1.98	-1.61	-1.45	-1.28	-1.24
125	-.02	.02	.06	-.07	-.06	-.06	-.38
126	-.40	-.98	-1.33	-1.32	-1.19	-1.11	-1.11
127	-.10	-.08	.02	.07	.09	.11	.14
128	-.30	-.39	-.42	-.61	-.64	-.68	-.76
129	-.10	-.08	.02	.07	.09	.11	.14
130	-.28	-.33	-.42	-.73	-.74	-.79	-.89
131	-.08	-.06	.06	.09	.15	.15	.19
132	-.28	-.39	-.52	-1.16	-1.09	-1.06	-1.14
133	-.04	.04	.19	.25	.28	.30	.32
134	-.30	-.47	-1.27	-1.13	-1.04	-1.00	-1.03
135	.02	.10	.17	.14	.15	.13	.14
136	-.40	-1.59	-.90	-1.00	-.89	-.89	-.92
137	-.04	-.02	.06	.07	.09	.09	.11
138	-.18	-.20	-.27	-.39	-.43	-.51	-.59

TABLE 39.– CONTINUED

(a) Wing (Concluded)

Orifice No. \ α	4.02	8.18	16.52	24.83	26.84	28.84	32.87
139	-0.02	-0.02	0.06	0.05	0.09	0.09	0.11
140	.06	-.18	-.27	-.48	-.53	-.64	-.76
141	-.04	-.02	.02	.02	.09	.09	.14
142	-.14	-.20	-.27	-.84	-.81	-.85	-.97
143	0	.04	.11	.11	.15	.15	.19
144	-.24	-.29	-.85	-.91	-.85	-.83	-.89
145	.02	.04	.13	.09	.11	.11	.11
146	-.32	-1.25	-.67	-.77	-.74	-.74	-.81
147	0	-.02	.06	.09	.13	.19	.32
148	-.14	-.20	-.19	-.32	-.40	-.47	-.59
149	~~-.04~~	~~-.04~~	~~-.04~~	~~-.07~~	~~-.06~~	~~-.09~~	~~-.14~~
150	-.14	-.18	-.19	-.48	-.57	-.68	-.81
151	.22	.24	.38	.07	.32	.30	.30
152	-.12	-.20	-.48	-1.00	-.96	-.96	-1.03
153	-.14	-.16	.54	.55	.55	.55	.51
154	-.30	-.37	-.81	-.89	-.85	-.85	-.92
155	.10	.14	.17	.11	.15	.15	.14
156	-.40	-.98	-.69	-.77	-.74	-.74	-.81
157	0	0	.06	.07	.09	.09	.05
158	-.12	-.14	-.15	-.30	-.34	-.43	-.51
159	0	0	.06	.05	.09	.04	.03
160	-.08	-.12	-.15	-.39	-.47	-.57	-.70
161	0	0	.02	-.02	0	0	0
162	-.08	-.35	-.42	-.86	-.81	-.81	-.89
163	-.02	0	.02	0	.04	.04	.05
164	-.18	-.24	-.71	-.80	-.74	-.74	-.81
165	0	.04	.06	.02	.04	.04	.05
166	-.23	-.69	-.58	-.70	-.68	-.68	-.76
167	.04	.02	.06	.05	.04	.02	-.05
168	.06	.02	.06	0	-.02	-.06	-.19
169	.06	.04	.06	-.05	-.09	-.15	-.30
170	.06	.04	.04	-.14	-.21	-.32	-.49
171	.10	.08	-.11	-.32	-.32	-.36	-.46
172	.08	.06	-.21	-.66	-.66	-.70	-.81
173	.12	.04	-.17	-.27	-.26	-.28	-.32
174	.06	-.22	-.46	-.66	-.64	-.66	-.73
175	-.02	-.18	-.21	-.36	-.34	-.38	-.38
176	-.06	-.37	-.38	-.57	-.57	-.62	-.68

Note: A line has been drawn through the pressure coefficients for which the data are doubtful.

TABLE 39.- CONTINUED

(b) Vertical tail

Orifice No. \ α	4.02	8.18	16.52	24.83	26.84	28.84	32.87
201	-0.08	-0.15	-0.15	0.02	-0.39	-0.80	-1.42
202	-1.45	-1.29	-1.06	-1.24	-1.15	-.72	-.57
203	.22	.17	.09	-.09	-.52	-.87	-1.17
204	~~-.04~~	~~-.02~~	~~.09~~	~~.13~~	~~.09~~	~~.09~~	~~.08~~
205	.27	.19	-.15	-.76	-1.02	-.91	-1.06
206	~~.10~~	~~.15~~	~~.30~~	~~.35~~	~~.33~~	~~.35~~	~~.33~~
207	.27	.17	-.15	-.74	-.96	-.89	-1.03
208	-.45	-.50	-.55	-.70	-.78	-.74	-.75
209	.08	-.02	-.13	-.24	-.33	-.54	-.78
210	-1.45	-1.46	-2.13	-1.67	-1.48	-1.13	-.97
211	.20	.15	.09	-.07	-.48	-.65	-.86
212	-.73	-.77	-.85	-.96	-1.00	-.93	-.94
213	.18	.13	.06	-.16	-.70	-.74	-.89
214	-.67	-.52	-.66	-.76	-.91	-.85	-.92
215	.20	.17	.02	-.41	-.67	-.74	-.86
216	~~-.65~~	~~-.54~~	~~-.64~~	~~-.76~~	~~-.87~~	~~-.85~~	~~-.94~~
217	.16	.06	-.06	-.13	-.13	-.24	-.53
218	-2.90	-3.00	-2.06	-2.70	-2.59	-2.17	-2.31
219	.18	.15	.11	-.09	-.39	-.54	-.81
220	-.59	-.65	-.62	-.80	-.87	-.93	-1.00
221	.12	.11	.06	-.26	-.65	-.70	-.83
222	-.51	-.54	-.60	-.76	-.87	-.91	-1.00
223	.12	.06	0	-.26	-.61	-.70	-.75
224	-.45	-.54	-.57	-.74	-.83	-.87	-.97
225	.24	.19	.13	.11	.09	.02	-.28
226	-.69	-.77	-.83	-.89	-1.13	-1.09	-.97
227	.24	.23	.21	.16	.02	-.30	-.61
228	-.49	-.52	-.49	-.63	-.76	-.78	-.89

Note: Lines have been drawn through the pressure coefficients for which the data are doubtful.

TABLE 39.– CONTINUED

(b) Vertical tail (Concluded)

Orifice No. \ α	4.02	8.18	16.52	24.83	26.84	28.84	32.87
229	~~0.10~~	~~0.15~~	~~0.30~~	~~0.35~~	~~0.33~~	~~0.33~~	~~0.33~~
230	-.45	-.46	-.47	-.65	-.76	-.78	-.86
231	.29	.27	.21	-.02	-.30	-.52	-.67
232	-.33	-.35	-.36	-.54	-.67	-.74	-.83
233	.24	.21	.15	.13	.13	.09	-.17
234	-.63	-.69	-.77	-.78	-.98	-.96	-.92
235	.29	.27	.26	.24	.20	-.04	-.42
236	-.78	-.94	-1.19	-1.07	-1.02	-1.07	-.89
237	.39	.38	.34	.26	-.09	-.41	-.69
238	-.43	-.46	-.43	-.59	-.72	-.74	-.81
239	.37	.33	.28	.07	-.26	-.46	-.64
240	-.33	-.40	-.40	-.59	-.74	-.80	-.89
241	.08	.04	0	-.02	-.02	-.09	-.25
242	-.63	-.67	-.68	-.70	-.87	-.87	-.86
243	.14	.13	.11	.09	.07	-.13	-.44
244	-.73	-.77	-.74	-.70	-.76	-.83	-.83
245	.24	.23	.21	.11	-.18	-.46	-.69
246	-.24	-.27	-.23	-.59	-.50	-.61	-.72
247	.27	.25	.21	0	-.26	-.44	-.64
248	-.18	-.23	-.23	-.39	-.52	-.61	-.72
249	-.16	-.21	-.23	-.28	-.30	-.33	-.39
250	-.63	-.67	-.63	-.70	-.80	-.83	-.86
251	-.06	-.04	0	-.04	-.09	-.26	-.53
252	-.35	-.25	-.17	-.24	-.48	-.41	-.64
253	.06	.06	.08	-.04	-.20	-.41	-.64
254	-.06	-.06	-.02	-.16	-.26	-.44	-.64
255	.10	.06	.11	-.09	-.26	-.41	-.61
256	0	-.04	0	-.16	-.30	-.41	-.58

Note: A line has been drawn through the pressure coefficients for which the data are doubtful.

TABLE 39.– CONTINUED

(c) Fuselage

Orifice No. \ α	4.02	8.18	16.52	24.83	26.84	28.84	32.87
301	0.02	-0.04	-0.34	-1.07	-1.11	-1.11	-1.22
302	-.06	-.12	-.45	-1.18	-1.13	-1.06	-1.06
303	-.08	-.08	-.32	-.64	-.68	-.72	-.81
304	.02	.08	.06	-.04	-.06	-.09	-.14
305	.06	.40	.60	.73	.77	.81	.83
306	.14	.54	.57	.60	.62	.62	.56
307	.49	.50	.32	.02	-.02	-.11	-.31
308	.24	.12	-.21	-.64	-.68	-.79	-1.03
309	-.04	-.10	-.26	-.40	-.43	-.45	-.53
310	-.08	-.08	-.15	-.29	-.30	-.32	-.44
311	-.10	-.10	-.30	-.62	-.68	-.77	-.97
312	-.10	-.10	-.21	-.42	-.47	-.53	-.61
313	.18	.32	.49	.64	.68	.74	.78
314	.33	.40	.43	.33	.34	.32	.19
315	.29	.28	.11	-.22	-.28	-.38	-.61
316	.12	.02	-.26	-.62	-.70	-.79	-1.00
317	-.14	-.10	-.17	-.33	-.34	-.38	-.42
318	-.16	-.16	-.36	-.53	-.53	-.60	-.78
319	-.20	-.02	.13	.13	.11	.11	-.22
320	-.55	-.72	-1.11	-1.16	-1.04	-.96	-.86
321	.14	.24	.32	.33	.36	.36	.33
322	.14	.16	.02	-.27	-.30	-.36	-.56
323	0	.06	-.32	-.67	-.72	-.79	-.97
324	-.29	-.14	-.28	-.36	-.36	-.38	-.47
325	-.27	-.28	-.51	-.71	-.72	-.66	-.69
326	-.02	.06	.13	.13	.15	.17	.14
327	-.45	-.52	-.51	-.56	-.51	-.49	-.50
328	-.06	-.08	-.26	-.56	-.60	-.64	-.72
329	-.08	0	.11	.22	.28	.34	.42
330	0	.10	.21	.27	.32	.34	.33
331	-.20	-.18	-.19	-.27	-.26	-.26	-.36
332	-.39	-.38	-.51	-.85	-.87	-.98	-1.06
333	-.33	-.22	-.06	.04	.06	.09	.14
334	-.43	-.30	-.15	.02	.02	.06	.14
335	-.39	-.38	-.45	-.69	-.72	-.81	-.94
336	-.31	-.28	-.30	-.49	-.55	-.64	-.72

Note: A line has been drawn through the pressure coefficients for which the data are doubtful.

TABLE 39.– CONTINUED

(c) Fuselage (Concluded)

Orifice No. \ α	4.02	8.18	16.52	24.83	26.84	28.84	32.87
337	-0.24	-0.16	-0.06	-0.02	0	0	0.03
338	-.24	-.14	-.04	.02	.02	.02	.06
339	-.33	-.28	-.26	-.42	-.51	-.60	-.69
340	~~1.41~~	~~1.42~~	~~1.49~~	~~1.51~~	~~1.47~~	~~1.45~~	~~1.72~~
341	-.14	-.08	-.04	-.02	-.02	-.02	-.03
342	-.20	-.14	-.09	-.04	-.11	-.15	-.17
343	.14	.20	.16	-.11	-.40	-.57	-.69
344	.18	.24	.19	-.18	-.51	-.64	-.75
345	-.06	0	.04	.04	.04	.02	.02
346	-.06	.02	-.02	-.04	.04	.02	0
347	-.08	-.04	0	0	-.02	-.02	-.06
348	-.12	-.08	-.02	-.07	-.13	-.19	-.22
349	-.20	-.14	-.09	-.11	-.19	-.26	-.33
350	-.02	.02	.02	-.07	-.15	-.19	-.31
351	-.04	0	.02	-.02	-.09	-.13	-.22
352	-.04	0	.02	-.02	-.04	-.09	-.19
353	-.04	.02	.04	.07	.02	-.06	-.11
354	-.02	.02	.04	.02	-.09	-.26	-.42
355	-.06	-.02	.02	.02	-.06	-.23	-.47
356	.08	.12	.13	.02	-.09	-.21	-.42
357	0	.06	.06	-.07	-.15	-.21	-.31
358	~~.24~~	~~.30~~	~~.30~~	~~.20~~	~~.13~~	~~.09~~	~~0~~
359	0	.04	.02	-.04	-.11	-.15	-.25
360	-.02	.02	0	-.11	-.19	-.28	-.39
361	-.08	-.06	-.09	-.22	-.30	-.34	-.42
362	-.04	0	0	-.02	-.15	-.38	-.53
363	0	.04	.04	.02	-.06	-.13	-.14
364	0	.04	.04	.02	-.04	-.15	-.14
365	.06	.12	.11	.06	-.02	-.09	-.14
366	-.29	-.30	-.49	-.85	-.91	-1.00	-1.22
367	.24	.32	.45	.53	.53	.55	.58
368	-.06	.06	.23	.38	.40	.43	.50
369	.06	.18	.36	.51	.55	.60	.67
370	.08	.20	.36	.51	.55	.60	.67
371	-.41	-.16	.02	.49	.55	.64	.69
372	-.16	-.08	.13	.22	.23	.28	.31

Note: Lines have been drawn through the pressure coefficients for which the data are doubtful.

TABLE 39.– CONCLUDED

(d) Fuselage-duct rakes

Tube No. \ α	4.02	8.18	16.52	24.83	26.84	28.84	32.87
401 T. H.[a]	0.98	1.00	1.00	0.65	0.58	0.51	0.38
402 St. H.	.47	.45	.38	.30	.25	.19	.14
403 T. H.	.98	1.00	.96	.84	.79	.77	.65
404	---	---	---	---	---	---	---
405 St. H.	.27	.24	.19	.16	.10	.02	-.05
406 T. H.	.98	1.00	.96	.84	.79	.74	.65
407 T. H.	.98	1.00	.94	.82	.77	.72	.62
408 St. H.	.14	.16	.11	.11	.06	0	-.05
409 T. H.	.98	1.00	.96	.84	.79	.77	.65
410 T. H.	.98	.98	.94	.87	.83	.79	.70
411 St. H.	.10	.08	0	-.11	-.19	-.28	-.24
412 T. H.	.96	.96	.91	.76	.69	.62	.49
413 T. H.	.96	.96	.91	.70	.56	.43	.24
414 St. H.	-.02	-.06	-.19	-.33	-.43	-.60	-.78
415 T. H.	.96	.94	.81	.61	.50	.38	.16
416 T. H.	.94	.87	.62	.22	.23	.06	-.24
417 St. H.	-.14	-.22	-.49	-.54	-.66	-.66	-.57
418 T. H.	.90	.81	.53	.43	.19	-.30	-.49
501 T. H.	.61	.61	.53	.41	.33	.26	.16
502 St. H.	.57	.59	.51	.37	.31	.23	.16
503 T. H.	.63	.65	.55	.41	.33	.26	.16
504 T. H.	.63	.63	.55	.41	.33	.26	.19
505 St. H.	.59	.57	.51	.37	.31	.23	.16
506 T. H.	.61	.61	.53	.41	.33	.26	.19
507 T. H.	.61	.61	.53	.41	.35	.28	.19
508 St. H.	.59	.57	.49	.37	.31	.21	.14
509 T. H.	.67	.65	.55	.41	.35	.28	.19
510 T. H.	.61	.55	.53	.38	.31	.21	.14
511 St. H.	.59	.57	.49	.39	.31	.23	.16
512 T. H.	.61	.61	.51	.38	.31	.23	.16
513	---	---	---	---	---	---	---
514 St. H.	.59	.57	.51	.37	.31	.23	.16
515 T. H.	.63	.61	.51	.38	.31	.23	.16
516 T. H.	.63	.61	.51	.40	.31	.23	.16
517 St. H.	.59	.57	.51	.37	.31	.23	.16
518	---	---	---	---	---	---	---
519 T. H.	.63	.61	.51	.38	.31	.23	.16
520 St. H.	.59	.57	.51	.37	.31	.23	.16
521 T. H.	.61	.59	.49	.37	.31	.23	.16
522 St. H.	.59	.59	.49	.37	.31	.23	.16
523 T. H.	.59	.57	.49	.35	.29	.21	.14

[a]Total head tube (coefficient given as P_t).

[b]Static head tube (coefficient given as P_s).

TABLE 40.– PRESSURE COEFFICIENTS FOR THE FLYING MOCK-UP OF THE XP-92 AIRPLANE, LANDING GEAR EXTENDED, $\beta = -10.06^{\circ}$, $\delta_e = -10^{\circ}$, $\delta_a = \pm 10^{\circ}$, $\delta_r = 10^{\circ}$

(a) Wing

Orifice No. \ α	4.02	8.18	16.52	24.83	26.84	28.84
101	0.08	0.19	0.40	0.60	0.62	0.64
102	-.08	-.21	-.51	-1.13	-1.00	-1.04
103	---	---	---	---	---	---
104	---	---	---	---	---	---
105	.16	.29	.47	.60	.62	.64
106	-.18	-.42	-.96	-1.85	-1.00	-1.04
107	.27	.40	.31	.26	.34	.32
108	-.33	-.79	-2.00	-1.70	-.96	-1.04
109	.12	.17	.33	.47	.49	.53
110	0	-.52	-.31	-.87	-.94	-1.00
111	.08	.15	.36	.49	.51	.53
112	-.08	-.23	-.49	-1.28	-.96	-1.02
113	.12	.23	.44	.53	.53	.34
114	-.18	-.42	-1.00	-1.15	-.94	-.94
115	.24	.35	.33	.40	.40	.40
116	-.31	-.77	-2.05	-1.09	-.94	-.91
117	-.53	-.46	-.20	0	0	.04
118	.04	0	-.16	-.66	-.87	-.74
119	-.43	-.38	-.22	-.02	0	.02
120	.02	-.04	-.27	-.85	-.91	-.81
121	.04	.11	.29	.36	.38	.38
122	-.06	-.17	-.44	-1.00	-.91	-.87
123	.06	.15	.36	.43	.43	.45
124	-.14	-.35	-1.09	-.89	-.85	-.74
125	.10	.25	.44	.43	.43	.45
126	-.22	-.63	-2.00	-.83	-.79	-.72
127	-.20	-.19	-.07	.02	.02	.02
128	.12	.11	0	-.51	-.64	-.64
129	-.20	-.17	-.04	.04	.04	.04
130	.12	.11	-.13	-.72	-.77	-.70
131	-.24	-.19	0	.11	.11	.11
132	.04	-.04	-.36	-.79	-.77	-.68
133	-.18	-.06	.16	.26	.26	.30
134	-.04	-.19	-.85	-.68	-.64	-.64
135	-.08	.11	.33	.38	.38	.40
136	-.08	-.42	-.73	-.66	-.62	-.62
137	-.33	-.33	-.27	-.26	-.32	-.36
138	.37	.33	.33	-.17	-.49	-.36

TABLE 40.– CONTINUED

(a) Wing (Concluded)

Orifice No. \ α	4.02	8.18	16.52	24.83	26.84	28.84
139	-0.35	-0.35	-0.31	-0.32	-0.36	-0.40
140	.39	.35	.22	-.51	-.64	-.66
141	-.47	-.48	-.40	-.40	-.45	-.47
142	.39	.33	-.09	-.64	-.66	-.66
143	-.33	-.27	-.22	-.19	-.23	-.23
144	.29	.19	-.47	-.53	-.53	-.57
145	-.41	-.25	-.09	0	-.04	-.02
146	.27	.06	-.40	-.51	-.47	-.53
147	-.75	-.79	-.78	-.85	-.98	-1.15
148	.10	.06	.07	.06	-.09	-.13
149	~~-.33~~	~~-.31~~	~~-.42~~	~~-.60~~	~~-.74~~	~~-.79~~
150	-.29	-.25	-.42	-.55	-.64	-.68
151	-1.39	-1.48	-1.60	-1.74	-1.89	-1.94
152	-.47	-.44	-.49	-.60	-.62	-.64
153	-1.53	-1.48	-1.33	-.70	-1.49	-1.49
154	-.55	-.48	-.44	-.51	-.53	-.60
155	-.69	-.48	-.29	-.21	-.26	-.23
156	.39	.15	-.31	-.51	-.47	-.55
157	-.24	-.27	-.22	-.26	-.40	-.49
158	.35	.31	.36	-.09	-.40	-.53
159	-.31	-.31	-.29	-.38	-.49	-.55
160	.39	.35	.24	-.49	-.62	-.66
161	-.45	-.44	-.38	-.47	-.57	-.57
162	.35	.31	-.22	-.57	-.62	-.64
163	-.49	-.46	-.40	-.38	-.47	-.47
164	.29	.19	-.22	-.47	-.49	-.55
165	-.59	-.48	-.29	-.21	-.30	-.28
166	.27	.13	-.18	-.51	-.51	-.55
167	.04	.04	.09	0	-.26	-.38
168	.16	.19	.22	.02	-.30	-.45
169	.06	.06	.09	-.36	-.49	-.53
170	.16	.15	.16	-.45	-.60	-.64
171	-.06	-.02	-.11	-.36	-.53	-.53
172	.08	.11	-.16	-.43	-.62	-.62
173	-.08	.04	-.07	-.19	-.32	-.36
174	.06	.11	-.11	-.36	-.51	-.53
175	-.57	-.23	-.09	-.15	-.26	-.30
176	-.10	.02	.02	-.15	-.26	-.32

Note: A line has been drawn through the pressure coefficients for which the data are doubtful.

TABLE 40.– CONTINUED

(b) Vertical tail

Orifice No. \ α	4.02	8.18	16.52	24.83	26.84	28.84
201	-1.61	-1.42	-1.20	-1.34	-1.17	-0.68
202	0	-.04	-.11	-.02	-.36	-.74
203	-.81	-.73	-.72	-.91	-.94	-.72
204	~~.08~~	~~.11~~	~~.20~~	~~.21~~	~~.17~~	~~.13~~
205	-.50	-.50	-.54	-.70	-.74	-.68
206	~~.11~~	~~.17~~	~~.26~~	~~.32~~	~~.34~~	~~.34~~
207	-.44	-.48	-.54	-.68	-.74	-.68
208	.23	.17	-.13	-.77	-.91	-.83
209	-1.54	-1.42	-2.35	-2.09	-1.55	-1.30
210	.06	-.02	-.18	-.28	-.32	-.43
211	-.73	-.75	-.85	-.98	-.98	-.94
212	.21	.17	.09	-.11	-.43	-.53
213	-.52	-.56	-.70	-.83	-.87	-.87
214	.19	.17	.09	-.17	-.64	-.64
215	-.40	-.44	-.54	-.68	-.72	-.74
216	~~.15~~	~~.13~~	~~-.04~~	~~-.53~~	~~-.70~~	~~-.68~~
217	-3.00	-2.34	-2.04	-2.41	-2.83	-2.36
218	.15	.08	-.09	-.15	-.13	-.21
219	-.61	-.61	-.63	-.81	-.87	-.94
220	.21	.17	.11	-.11	-.34	-.49
221	-.48	-.52	-.63	-.79	-.85	-.87
222	.15	.13	.07	-.26	-.55	-.66
223	-.46	-.52	-.59	-.74	-.79	-.83
224	.13	.11	0	-.32	-.53	-.60
225	-.85	-.98	-1.00	-1.06	-1.13	-.98
226	-.27	.23	.16	.11	.13	0
227	-.50	-.52	-.54	-.68	-.74	-.77
228	.29	.27	.24	.17	.02	-.36

Note: Lines have been drawn through the pressure coefficients for which the data are doubtful.

TABLE 40.- CONTINUED

(b) Vertical tail (Concluded)

Orifice No. \ α	4.02	8.18	16.52	24.83	26.84	28.84
229	~~0.11~~	~~0.15~~	~~0.28~~	~~0.32~~	~~0.34~~	~~0.34~~
230	.31	.29	.26	.06	-.26	-.47
231	-.31	-.35	-.39	-.55	-.66	-.68
232	.27	.27	.22	-.06	-.32	-.47
233	-.73	-.81	-.93	-.91	-.96	-.87
234	.25	.23	.18	.13	.15	.04
235	-.85	-.96	-1.04	-1.02	-.98	-.98
236	.21	.15	-.04	.11	.15	-.04
237	-.42	-.44	-.44	-.64	-.72	-.77
238	.38	.38	.35	.21	-.11	-.38
239	-.29	-.35	-.35	-.57	-.68	-.72
240	.33	.33	.24	0	-.26	-.43
241	-.67	-.73	-.83	-.83	-.87	-.83
242	.11	.11	.04	0	0	-.09
243	-.70	-.69	-.78	-.79	-.79	-.83
244	.13	.13	.13	.06	.09	-.11
245	-.25	-.25	-.24	-.40	-.49	-.62
246	.25	.25	.24	.11	-.17	-.43
247	-.19	-.21	-.22	-.40	-.49	-.57
248	.27	.25	.22	-.04	-.26	-.43
249	.63	-.65	-.72	-.74	-.83	-.77
250	-.19	-.19	-.24	-.30	-.32	-.34
251	-.29	-.19	-.18	-.23	-.28	-.43
252	0	.04	.04	0	-.06	-.26
253	-.06	-.04	-.07	-.19	-.28	-.43
254	.11	.11	.09	0	-.17	-.38
255	-.04	-.02	-.02	-.19	-.32	-.43
256	.13	.13	.11	-.09	-.23	-.38

Note: A line has been drawn through the pressure coefficients for which the data are doubtful.

TABLE 40.– CONTINUED

(c) Fuselage

Orifice No. \ α	4.02	8.18	16.52	24.83	26.84	28.84
301	0.02	–0.06	–0.26	–1.04	–1.11	–1.13
302	.31	.17	–.16	–.51	–.62	–.68
303	.52	.44	.24	–.04	–.13	–.19
304	.52	.61	.70	.77	.77	.75
305	.27	.38	.52	.64	.68	.71
306	~~.25~~	~~.06~~	~~.07~~	~~.02~~	~~0~~	~~0~~
307	–.02	–.06	–.26	–.53	–.60	–.63
308	–.02	–.13	–.52	–1.04	–1.09	–1.06
309	–.08	–.11	–.18	–.21	–.23	–.23
310	.08	–.04	–.30	–.62	–.68	–.54
311	.25	.17	–.07	–.40	–.49	–.58
312	.33	.40	.44	.47	.47	.44
313	.13	.17	.26	.34	.36	.38
314	–.08	–.13	–.26	–.47	–.55	–.58
315	–.06	–.13	–.30	–.60	–.68	–.75
316	–.04	–.06	–.16	–.28	–.32	–.33
317	.04	–.06	–.30	–.64	–.70	–.77
318	.15	.11	–.08	–.36	–.45	–.54
319	.19	.23	.30	.34	.36	.35
320	.15	.21	.33	.40	.43	.40
321	–.06	.04	.04	.04	.06	.08
322	–.15	–.19	–.41	–.47	–.57	–.63
323	–.15	–.15	–.22	–.34	–.36	–.38
324	–.11	–.17	–.33	–.51	–.55	–.58
325	–.02	.04	.18	.28	.30	.35
326	–.19	–.21	–.52	–.43	–.49	–.54
327	–.46	–.50	–.52	–.55	–.53	–.50
328	–.17	–.29	–.54	–.87	–.89	.90
329	–.08	–.04	.07	.19	.21	.27
330	–.08	–.08	–.20	–.45	–.51	–.50
331	–.17	–.15	–.18	–.23	.21	–.21
332	.08	.06	–.04	–.62	–.91	–.88
333	–.33	–.25	–.09	.06	.09	.13
334	–.35	–.38	–.24	–.11	–.11	–.08
335	.13	.13	.04	–.62	–.77	–.73
336	.21	.21	.18	–.36	–.62	–.69
337	–.21	–.19	–.08	–.02	–.02	0
338	–.27	–.13	–.04	.02	.02	.04

Note: A line has been drawn through the pressure coefficients for which the data are doubtful.

TABLE 40.— CONTINUED

(c) Fuselage (Concluded)

Orifice No. \ α	4.02	8.18	16.52	24.83	26.84	28.84
339	0.21	0.21	0.18	-0.21	-0.53	-0.63
340	~~.65~~	~~.65~~	~~.65~~	~~.64~~	~~.66~~	~~.67~~
341	-.11	-.08	-.04	0	-.02	-.02
342	-.04	-.04	.02	.06	.06	.06
343	-.27	-.31	-.35	-.45	-.51	-.56
344	-.31	-.31	-.33	-.43	-.49	-.56
345	-.17	-.15	-.13	-.13	-.23	-.29
346	-.13	-.08	-.04	-.04	-.13	-.17
347	-.06	-.06	0	.02	-.02	-.02
348	-.02	-.02	.04	.06	.06	.04
349	-.02	-.02	.04	.06	.06	.04
350	.08	.08	.09	.02	-.09	-.19
351	-.04	-.04	0	.02	-.06	-.19
352	0	0	.04	.02	-.09	-.25
353	0	.02	.04	.04	.04	.06
354	0	.02	.02	0	-.04	-.04
355	0	0	0	-.02	-.04	-.11
356	0	0	.02	-.06	-.13	-.17
357	.04	.04	.04	-.04	-.15	-.19
358	~~.27~~	~~.27~~	~~.26~~	~~.19~~	~~.13~~	~~.11~~
359	.25	.25	.04	.02	-.02	-.08
360	.23	0	-.02	-.02	-.09	-.27
361	-.06	-.08	-.13	-.23	-.28	-.31
362	-.02	-.04	-.07	-.15	-.26	-.31
363	.02	0	-.02	-.04	-.11	-.17
364	.04	.04	.04	-.02	-.09	-.13
365	.11	.13	.09	.06	-.02	-.08
366	.02	-.04	-.18	-.53	-.94	-1.06
367	.06	.08	.18	.23	.23	.26
368	-.04	.04	.22	.36	.38	.43
369	.08	.17	.33	.49	.53	.57
370	.11	.19	.35	.51	.55	.62
371	-.15	-.04	0	.15	.17	.19
372	-.15	-.04	.16	.30	.32	.34

Note: Lines have been drawn through the pressure coefficients for which the data are doubtful.

TABLE 40.– CONCLUDED

(d) Fuselage–duct rakes

Tube No. \ α	4.02	8.18	16.52	24.83	26.84	28.84
401 T. H.[a]	0.87	0.84	0.82	0.72	0.65	0.59
402 St. H.[b]	-.25	-.31	-.39	-.48	-.63	-.69
403 T. H.	.94	.92	.82	.72	.65	.61
404	---	---	---	---	---	---
405 St. H.	.02	0	-.04	-.11	-.20	-.22
406 T. H.	.98	.96	.87	.74	.70	.61
407 T. H.	.98	.96	.91	.76	.72	.65
408 St. H.	.10	.10	.13	.06	0	0
409 T. H.	.98	.96	.94	.78	.74	.67
410 T. H.	.98	.96	.94	.80	.76	.71
411 St. H.	.08	.08	.04	-.04	-.13	-.16
412 T. H.	.98	.94	.89	.72	.67	.61
413 T. H.	.98	.96	.91	.72	.54	.35
414 St. H.	.02	-.02	-.20	-.46	-.70	-.78
415 T. H.	.96	.94	.84	.63	.52	.41
416 T. H.	.96	.92	.67	.33	.41	.18
417 St. H.	-.13	-.22	-.41	-.57	-.70	-.75
418 T. H.	.96	.88	.65	.41	.33	0
501 T. H.	.69	.67	.59	.41	.37	.31
502 St. H.	.65	.61	.52	.39	.33	.29
503 T. H.	.71	.69	.59	.43	.37	.31
504 T. H.	.71	.69	.59	.41	.37	.31
505 St. H.	.65	.61	.52	.37	.33	.29
506 T. H.	.69	.67	.56	.41	.37	.31
507 T. H.	.67	.65	.56	.41	.37	.31
508 St. H.	.65	.61	.52	.37	.33	.29
509 T. H.	.67	.63	.56	.41	.37	.41
510 T. H.	.81	.78	.63	.46	.39	.33
511 St. H.	.65	.61	.54	.39	.33	.29
512 T. H.	.87	.84	.67	.48	.41	.35
513	---	---	---	---	---	---
514 St. H.	.65	.61	.52	.39	.33	.29
515 T. H.	.85	.84	.70	.50	.43	.37
516 T. H.	.77	.78	.67	.50	.41	.37
517 St. H.	.65	.61	.52	.39	.30	.29
518	---	---	---	---	---	---
519 T. H.	.89	.82	.70	.50	.41	.37
520 St. H.	.65	.61	.52	.39	.30	.29
521 T. H.	.75	.90	.61	.43	.37	.31
522 St. H.	.63	.61	.52	.39	.30	.29
523 T. H.	.67	.61	.52	.39	.30	.27

[a]Total head tube (coefficient given as P_t).

[b]Static head tube (coefficient given as P_s).

TABLE 41.– PRESSURE COEFFICIENTS FOR THE FLYING MOCK-UP OF THE XP-92 AIRPLANE, LANDING GEAR EXTENDED, $\beta = 9.98^{\circ}$, $\delta_e = -10^{\circ}$, $\delta_a = \mp 10^{\circ}$, $\delta_r = 10^{\circ}$

(a) Wing

Orifice No. \ α	4.02	8.18	16.52	24.83	26.84	28.84	32.87
101	-0.06	0	0.36	0.57	0.60	0.66	0.68
102	-.04	-.15	-.55	-.83	-1.00	-1.21	-1.59
103	--	--	--	--	--	--	--
104	--	--	--	--	--	--	--
105	-.04	.09	.15	.26	.26	.26	.22
106	-.06	-.21	-1.66	-3.85	-3.70	-3.19	-2.49
107	-.04	.11	-.30	-.45	-.53	-.57	-.65
108	-.06	-.34	-2.26	-3.23	-2.83	-2.66	-2.19
109	-.06	-.04	.26	.28	.30	.32	.35
110	-.17	-.23	-.51	-.74	-.81	-.89	-1.05
111	-.09	0	.30	.36	.38	.43	.43
112	-.17	-.23	-.55	-1.30	-1.57	-1.77	-1.76
113	-.09	0	.19	.19	.19	.19	.19
114	-.13	-.30	-2.53	-2.34	-2.23	-2.04	-1.76
115	-.06	.04	-.13	-.23	-.28	-.30	-.38
116	-.13	-.40	-1.87	-1.79	-1.79	-1.70	-1.54
117	-.57	-.45	-.21	-.11	-.11	-.09	-.03
118	-.19	-.26	-.45	-.60	-.45	-.70	-.81
119	-.49	-.51	-.17	-.06	-.06	-.04	.05
120	-.19	-.28	-.49	-.77	-.85	-.94	-1.03
121	-.26	-.21	-.23	-.28	-.04	-.23	-.19
122	-.17	-.26	-.47	-1.38	-1.49	-1.51	-1.51
123	-.17	-.09	.04	-.04	-.06	-.02	-.08
124	-.17	-.30	-1.96	-1.68	-1.64	-1.55	-1.43
125	-.17	-.02	.04	-.04	-.06	-.09	-.19
126	-.15	-.38	-1.32	-1.34	-1.34	-1.32	-1.24
127	-.17	-.13	.02	.09	.11	.13	.16
128	-.21	-.26	-.38	-.49	-.55	-.62	-.76
129	-.17	-.13	.02	.11	.11	.13	.16
130	-.19	-.23	-.38	-.60	-.70	-.79	-.89
131	-.17	-.13	.06	.13	.17	.19	.22
132	-.17	-.23	-.51	-1.17	-1.21	-1.21	-1.22
133	-.15	-.06	.17	.28	.30	.32	.32
134	-.15	-.28	-1.28	-1.21	-1.19	-1.17	-1.14
135	-.13	0	.17	.15	.15	.15	.14
136	-.13	-.38	-.87	-.98	-1.00	-1.00	-.97
137	-.09	-.06	.04	.11	.11	.11	.14
138	-.09	-.11	-.17	-.23	-.28	-.36	-.54

TABLE 41.– CONTINUED

(a) Wing (Concluded)

Orifice No. \ α	4.02	8.18	16.52	24.83	26.84	28.84	32.87
139	-0.06	-0.04	0.06	0.11	0.11	0.11	0.11
140	-.06	-.09	-.19	-.36	-.45	-.55	-.70
141	-.09	-.04	.02	.09	.11	.11	.14
142	-.06	-.11	-.26	-.77	-.85	-.89	-1.00
143	-.09	-.02	.11	.17	.19	.19	.19
144	-.13	-.21	-.87	-.89	-.91	-.94	-.95
145	-.11	0	.11	.15	.15	.13	.11
146	-.11	-.28	-.66	-.74	-.77	-.79	-.84
147	-.04	0	.09	.15	.15	.26	.38
148	-.06	-.09	-.15	-.19	-.26	-.34	-.49
149	~~-.04~~	~~-.04~~	~~-.04~~	~~0~~	~~-.02~~	~~-.06~~	~~-.14~~
150	-.06	-.09	-.17	-.38	-.49	-.60	-.76
151	.02	.15	.40	.36	.34	.32	.32
152	.04	-.06	-.47	-.98	-1.04	-1.04	-1.11
153	-.17	-.15	.53	.57	.57	.57	.49
154	-.19	-.28	-.81	-.85	-.87	-.91	-.95
155	-.06	.09	.19	.19	.17	.17	.14
156	-.13	-.36	-.45	-.72	-.77	-.79	-.84
157	-.04	-.02	.06	.11	.11	.09	.11
158	-.04	-.06	-.11	-.15	-.19	-.28	-.43
159	-.02	0	.06	.11	.11	.09	.08
160	-.02	-.04	-.11	-.28	-.34	-.47	-.62
161	-.06	-.02	.04	.04	.04	.04	.05
162	-.04	-.06	-.40	-.79	-.85	-.89	-.97
163	-.11	-.04	.04	.06	.06	.09	.05
164	-.09	-.17	-.72	-.72	-.77	-.68	-.84
165	-.15	-.02	.06	.09	.09	.09	.05
166	-.13	-.26	-.57	-.62	-.66	-.70	-.76
167	.04	.04	.09	.11	.11	.06	.03
168	.09	.06	.09	.09	.06	.02	-.08
169	.11	.06	.04	.02	-.02	-.06	-.16
170	.09	.09	.04	-.04	-.09	-.17	-.35
171	.09	.09	-.02	-.26	-.30	-.34	-.46
172	.09	.09	-.19	-.57	-.64	-.72	-.84
173	.11	.11	-.17	-.19	-.21	-.26	-.30
174	.06	.04	-.47	-.55	-.60	-.66	-.73
175	-.02	-.02	-.21	-.26	-.28	-.32	-.38
176	.06	.04	-.36	-.47	-.53	-.57	-.65

Note: A line has been drawn through the pressure coefficients for which the data are doubtful.

TABLE 41.– CONTINUED

(b) Vertical tail

Orifice No. \ α	4.02	8.18	16.52	24.83	26.84	28.84	32.87
201	0.04	-0.02	-0.11	0.02	-0.34	-0.75	-1.32
202	-1.40	-1.29	-.98	-1.19	-1.13	-.79	-.62
203	.28	.21	.09	-.11	-.47	-.81	-1.11
204	~~-.06~~	~~-.04~~	~~.09~~	~~.15~~	~~.11~~	~~.09~~	~~.08~~
205	.28	.23	-.15	-1.83	-1.02	-.88	-1.03
206	~~.04~~	~~.11~~	~~.28~~	~~.34~~	~~.34~~	~~.33~~	~~.35~~
207	.28	.21	-.17	-.74	-.96	-.85	-1.00
208	-.38	-.42	-.51	-.68	-.77	-.73	-.76
209	.17	.11	-.11	-.23	-.30	-.52	-.78
210	-1.28	-1.21	-1.70	-1.55	-1.40	-1.13	-.97
211	.23	.17	.04	-.09	-.43	-.63	-.84
212	-.62	-.63	-.74	-.89	-.94	-.90	-.92
213	.17	.13	.04	-.19	-.68	-.71	-.89
214	-.38	-.40	-.60	-.72	-.81	-.83	-.89
215	.19	.17	-.07	-.47	-.66	-.71	-.84
216	~~-.36~~	~~-.38~~	~~-.57~~	~~-.72~~	~~-.81~~	~~-.83~~	~~-.92~~
217	.19	.15	0	-.09	-.11	-.17	-.54
218	-1.96	-2.30	-1.66	-2.32	-2.19	-1.81	-1.30
219	.13	.08	0	-.15	-.33	-.54	-.78
220	-.40	-.44	-.47	-.66	-.70	-.79	-.89
221	.06	.04	-.04	-.34	-.66	-.71	-.81
222	-.34	-.35	-.47	-.64	-.70	-.77	-.39
223	.06	.04	-.11	-.32	-.57	-.65	-.76
224	-.28	-.33	-.47	-.64	-.70	-.75	-.89
225	-.09	-.11	-.17	-.26	-.28	-.35	-.46
226	-.49	-.44	-.38	-.51	-.68	-.65	-.73
227	-.15	-.17	-.23	-.36	-.38	-.50	-.68
228	.04	.06	.04	-.02	-.13	-.29	-.57

Note: Lines have been drawn through the pressure coefficients for which the data are doubtful.

TABLE 41– CONTINUED

(b) Vertical tail (Concluded)

Orifice No. \ α	4.02	8.18	16.52	24.83	26.84	28.84	32.87
229	~~0.04~~	~~0.11~~	~~0.28~~	~~0.34~~	~~0.34~~	~~0.33~~	~~0.35~~
230	.09	.08	.06	−.02	−.13	−.29	−.49
231	−.09	−.11	−.15	−.38	−.43	−.50	−.68
232	.06	.04	0	−.11	−.19	−.31	−.46
233	−.06	−.08	−.13	−.19	−.23	−.33	−.46
234	−.28	−.25	−.26	−.34	−.45	−.52	−.68
235	−.26	−.25	−.30	−.43	−.47	−.54	−.62
236	−.34	−.40	−.62	−.57	−.28	−.58	−.68
237	−.26	−.27	−.30	−.53	−.57	−.61	−.70
238	.17	.17	.17	.09	−.02	−.23	−.46
239	−.21	−.21	−.21	−.43	−.36	−.44	−.65
240	.15	.13	.15	.04	−.06	−.21	−.38
241	−.11	−.13	−.17	−.26	−.26	−.35	−.46
242	−.26	−.21	−.23	−.28	−.36	−.48	−.62
243	.11	−.11	−.15	−.26	−.28	−.38	−.54
244	−.15	−.08	−.47	−.28	−.02	−.40	−.57
245	−.09	−.11	−.15	−.30	−.40	−.50	−.68
246	.11	.11	.11	.02	−.09	−.25	−.49
247	−.09	−.08	−.11	−.28	−.32	−.44	−.62
248	.11	.11	.11	−.02	−.11	−.25	−.43
249	−.13	−.13	−.19	−.28	−.30	−.37	−.46
250	−.19	−.19	−.19	−.26	−.32	−.46	−.59
251	.04	.04	.02	−.06	−.11	−.25	−.49
252	.11	.11	.06	.02	−.04	−.21	−.49
253	.04	.04	0	−.11	−.21	−.38	−.62
254	.11	.11	.06	−.02	−.11	−.27	−.54
255	.02	.04	0	−.13	−.28	−.40	−.59
256	.11	.11	.11	−.02	−.17	−.29	−.49

Note: A line has been drawn through the pressure coefficients for which the data are doubtful.

TABLE 41.– CONTINUED

(c) Fuselage

Orifice No. \ α	4.02	8.18	16.52	24.83	26.84	28.84	32.87
301	0.17	0.06	-0.31	-1.02	-1.11	-1.13	-1.16
302	.02	-.02	-.33	-1.11	-1.17	-1.08	-1.00
303	0	-.04	-.27	-.62	-.70	-.71	-.76
304	.04	.06	.06	-.04	-.06	-.08	-.16
305	.21	.31	.58	.72	.77	.81	.84
306	~~.31~~	~~.40~~	~~.56~~	~~.62~~	~~.60~~	~~.61~~	~~.67~~
307	.54	.54	.31	.06	-.04	-.13	-.24
308	.40	.27	-.21	-.57	-.72	-.79	-.95
309	.08	0	-.25	-.38	-.43	-.44	-.53
310	-.04	-.04	-.15	-.26	-.32	-.33	-.39
311	-.04	-.06	-.29	-.57	-.70	-.79	-.92
312	-.04	-.06	-.21	-.43	-.47	-.50	-.61
313	.17	.25	.48	.66	.68	.73	.55
314	.29	.35	.42	.38	.32	.29	.29
315	.33	.31	.03	-.19	-.32	-.40	-.55
316	.25	.15	-.25	-.57	-.74	-.79	-.95
317	-.11	-.11	-.15	-.30	-.36	-.40	-.39
318	-.13	-.13	-.33	-.49	-.55	-.61	-.71
319	-.21	-.15	.15	.13	.11	.11	-.47
320	-.40	-.52	-1.04	-1.11	-1.06	-1.00	-.82
321	.13	.19	.31	.36	.36	.35	.37
322	-.04	.17	.02	-.21	-.32	-.38	-.50
323	-.08	.04	-.33	-.64	-.74	-.81	-.95
324	-.25	-.25	-.25	-.34	-.38	-.40	-.39
325	-.21	-.23	.50	-.72	-.74	-.67	-.66
326	-.04	.02	.13	.15	.17	.17	.18
327	-.35	-.42	-.50	-.51	-.51	-.48	-.50
328	.02	-.02	-.25	-.53	-.64	-.67	-.71
329	-.06	-.04	.11	.26	.28	.33	.42
330	-.04	.04	.23	.28	.30	.33	.37
331	-.11	-.15	-.17	-.28	-.28	-.27	-.34
332	-.25	-.27	-.44	-.79	-.87	-.94	-1.03
333	-.33	-.27	-.06	.06	.06	.11	.18
334	-.48	-.40	-.15	.04	.04	.06	.16
335	-.23	-.25	-.35	-.57	-.64	-.71	-.84
336	-.13	-.11	-.15	-.30	-.38	-.48	-.63

Note: A line has been drawn through the pressure coefficients for which the data are doubtful.

TABLE 41.– CONTINUED

(c) Fuselage (Concluded)

Orifice No. \ α	4.02	8.18	16.52	24.83	26.84	28.34	32.87
337	-0.19	-0.19	-0.06	0.02	0	0.02	0.08
338	-.25	-.21	-.04	.04	.02	.02	.08
339	-.02	-.04	-.04	-.17	-.28	-.38	-.50
340	~~1.48~~	~~1.50~~	~~1.52~~	~~1.55~~	~~1.53~~	~~1.50~~	~~1.79~~
341	-.11	-.11	-.02	.02	0	0	.03
342	-.21	-.19	-.08	-.06	-.13	-.17	-.39
343	.08	.06	.02	-.15	-.47	-.61	-.66
344	.02	0	-.04	-.28	-.55	-.67	-.68
345	-.02	0	.06	.11	.06	.06	.05
346	-.04	-.02	.04	.11	.06	.06	.05
347	-.06	-.04	0	.04	0	-.02	0
348	-.13	-.13	-.06	-.06	-.15	-.21	-.21
349	-.21	-.19	-.13	-.13	-.21	-.31	-.32
350	.04	.06	.06	.02	-.06	-.17	-.29
351	.02	.04	.06	.02	-.04	-.11	-.18
352	.02	.04	.06	.06	.02	-.04	-.08
353	-.04	-.02	0	.04	-.04	-.13	-.16
354	-.04	-.04	-.04	-.06	-.19	-.38	-.47
355	-.04	-.06	-.06	-.04	-.36	-.33	-.55
356	-.04	-.04	-.04	-.06	-.17	-.33	-.50
357	.02	.04	.04	-.04	-.17	-.29	-.42
358	~~.27~~	~~.27~~	~~.27~~	~~.23~~	~~.15~~	~~.08~~	~~.05~~
359	.04	.04	.04	-.02	-.11	-.19	-.29
360	0	-.02	-.02	-.06	-.17	-.27	-.37
361	-.06	-.08	-.15	-.23	-.32	-.38	-.39
362	-.06	-.08	-.15	-.19	-.30	-.46	-.50
363	-.04	-.04	-.06	-.02	-.06	-.17	-.24
364	-.02	-.02	-.02	0	-.09	-.19	-.21
365	.02	.04	.04	.04	-.06	-.19	-.24
366	-.17	-.23	-.44	-.79	-.94	-1.02	-1.18
367	.23	.27	.44	.55	.55	.56	.61
368	-.08	-.02	.23	.40	.40	.46	.53
369	.02	.11	.33	.53	.55	.61	.66
370	.04	.11	.35	.53	.77	.61	.66
371	-.25	-.38	.25	.53	.62	.67	.76
372	-.17	-.13	.13	.26	.26	.27	.34

Note: Lines have been drawn through the pressure coefficients for which the data are doubtful.

TABLE 41.– CONCLUDED

(d) Fuselage-duct rakes

Tube No. \ α	4.02	8.18	16.52	24.83	26.84	28.84	32.87
401 T. H.[a]	1.00	0.98	0.91	0.66	0.60	0.54	0.35
402 St. H.[b]	.43	.42	.36	.30	.26	.19	.11
403 T. H.	1.00	.98	.96	.85	.81	.77	.65
404	---	---	---	---	---	---	---
405 St. H.	.21	.23	.15	.15	.09	.02	.11
406 T. H.	.98	.98	.96	.85	.81	.17	.65
407 T. H.	.91	.98	.94	.83	.79	.73	.59
408 St. H.	.04	.08	.09	.09	.04	-.02	-.11
409 T. H.	.87	.96	.96	.85	.85	.77	.59
410 T. H.	.98	.96	.94	.87	.87	.85	.68
411 St. H.	.04	.04	-.04	-.15	-.21	-.27	-.41
412 T. H.	.98	.96	.89	.77	.70	.62	.16
413 T. H.	.98	.96	.89	.68	.57	.48	.16
414 St. H.	-.04	-.06	-.23	-.36	-.47	-.58	-.92
415 T. H.	.98	.96	.81	.60	.51	.37	.05
416 T. H.	.98	.94	.62	.13	.21	.04	-.11
417 St. H.	-.06	-.21	-.53	-.62	-.68	-.67	-.65
418 T. H.	.96	.91	.51	.40	.11	-.36	-.59
501 T. H.	.62	.58	.51	.38	.34	.25	.11
502 St. H.	.57	.56	.49	.36	.30	.21	.11
503 T. H.	.62	.60	.53	.40	.34	.27	.11
504 T. H.	.62	.60	.53	.40	.34	.27	.14
505 St. H.	.57	.56	.47	.36	.30	.21	.08
506 T. H.	.60	.58	.51	.40	.34	.27	.14
507 T. H.	.60	.58	.51	.40	.34	.27	.14
508 St. H.	.57	.56	.47	.36	.30	.21	.08
509 T. H.	.66	.67	.53	.43	.34	.27	.16
510 T. H.	.62	.56	.51	.36	.30	.23	.08
511 St. H.	.57	.56	.49	.36	.30	.23	.11
512 T. H.	.64	.58	.49	.36	.30	.23	.11
513	---	---	---	---	---	---	---
514 St. H.	.57	.56	.49	.36	.30	.23	.11
515 T. H.	.62	.60	.49	.36	.30	.23	.11
516 T. H.	.62	.60	.49	.36	.30	.23	.11
517 St. H.	.57	.56	.47	.36	.30	.23	.11
518	---	---	---	---	---	---	---
519 T. H.	.64	.58	.49	.36	.30	.23	.08
520 St. H.	.57	.56	.49	.36	.30	.23	.11
521 T. H.	.60	.56	.49	.36	.30	.23	.08
522 St. H.	.57	.56	.47	.36	.30	.23	.11
523 T. H.	.57	.54	.47	.36	.28	.21	.08

[a]Total head tube (coefficient given as P_t).

[b]Static head tube (coefficient given as P_s).

TABLE 42.– CALIBRATION OF THE STANDARD KOLLSMAN AIRSPEED INDICATORS AS MOUNTED ON THE FLYING MOCK-UP OF THE XP-92 AIRPLANE

(a) $\beta = 0.13^{\circ}$, $\alpha = 0^{\circ}$, Controls Neutral

	Dynamic Pressure q_c pounds per square foot								
	9.88	14.35	22.89	31.98	45.50	63.42	80.85	98.80	125.60
Nose P_t	.97	.99	1.00	1.00	1.00	1.00	1.00	1.00	1.00
Nose P_{ss}	.06	.06	.07	.07	.07	.07	.07	.07	.07

(b) $\beta = 0.13^{\circ}$, Controls Neutral

	Angle of Attack α (deg)									
	0	4.2	8.3	12.5	16.7	20.9	25.0	29.1	33.1	37.1
Nose P_t	1.00	1.00	0.99	1.00	0.99	0.96	0.86	0.82	0.75	0.70
Nose P_s	.07	.06	.06	.07	.04	.04	.01	0	–.02	–.02
Fin P_t	1.00	.98	.98	.98	.98	.98	.96	.92	.97	.92
Fin P_s	0	–.02	–.04	–.11	–.14	–.18	–.21	–.31	–.43	–.55
Nose Shrouded P_t	1.00	.98	.98	.98	1.00	1.00	1.00	.98	1.00	.97

(c) $\beta = -5.00^{\circ}$, Controls Neutral

	Angle of Attack α (deg)									
	0.1	4.2	8.4	12.6	16.7	20.9	25.0	29.1	33.0	37.0
Nose P_t	1.00	1.00	1.01	1.00	0.98	0.96	0.84	0.86	0.77	0.69
Nose P_s	.02	.03	.02	.01	.01	–.01	–.01	–.03	–.05	–.03
Fin P_t	.92	.98	.98	.94	.91	.92	.91	.87	.84	.42
Fin P_s	–.08	–.13	–.15	–.17	–.23	–.29	–.35	–.42	–.57	–.78
Nose Shrouded P_t	.94	1.00	1.00	1.00	.98	.98	1.00	.98	.97	1.00

TABLE 42. – CONTINUED

(d) $\beta = 9.98^{\circ}$, Controls Neutral

	Angle of attack α (deg)									
	0.1	4.2	8.4	12.6	16.7	20.9	25.0	29.0	33.0	37.0
Nose P_t	1.00	1.00	1.00	0.99	0.97	0.93	0.82	0.82	0.73	0.62
Nose P_s	–.05	–.05	–.07	–.09	–.09	–.10	–.10	–.10	–.10	–.15
Fin P_t	.87	.85	.83	.79	.74	.73	.68	.64	.49	–.41
Fin P_s	–.21	–.23	–.25	–.26	–.30	–.35	–.43	–.53	–.78	–.92
Nose Shrouded P_t	.98	1.00	.98	1.00	1.00	.98	1.00	1.00	1.00	.98

(e) $\beta = -10.06^{\circ}$, Controls Neutral

	Angle of attack α (deg)									
	0.1	4.2	8.4	12.6	16.7	20.9	25.0	29.0	33.1	37.0
Nose P_t	0.99	0.99	0.99	0.98	0.97	0.90	0.86	0.81	0.75	0.65
Nose P_s	–.05	–.07	–.07	–.09	–.10	–.09	–.09	–.09	–.10	–.10
Fin P_t	.82	.79	.77	.72	.67	.63	.56	.53	.32	–.59
Fin P_s	–.24	–.25	–.27	–.28	–.33	–.39	–.48	–.62	–.82	–.97
Nose Shrouded P_t	1.00	.98	1.00	1.00	.98	.98	.98	1.00	.98	.98

(f) $\beta = -15.20^{\circ}$, Controls Neutral

	Angle of attack α (deg)									
	0	4.2	8.4	12.6	16.7	20.9	25.0	29.0	33.0	37.0
Nose P_t	0.98	0.98	0.96	0.96	0.88	0.82	0.85	0.79	0.70	0.59
Nose P_s	–.16	–.16	–.18	–.20	–.19	–.18	–.19	–.19	–.16	–.14

TABLE 42. – CONTINUED

(g) $\beta = -20.20^{\circ}$, Controls Neutral

	Angle of attack α (deg)									
	0	4.2	8.4	12.6	16.7	20.9	25.0	29.0	33.0	37.0
Nose P_t	0.95	0.89	0.86	0.84	0.82	0.82	0.77	0.68	0.59	0.47
Nose P_s	–.20	–.19	–.18	–.18	–.18	–.18	–.17	–.15	–.15	–.12
Fin P_t	.31	.15	.10	–.06	–.13	–.23	–.32	–.19	–.32	–.81
Fin P_s	–.35	–.47	–.48	–.58	–.65	–.65	–.70	–.75	–.84	–.95
Nose Shrouded P_t	1.00	.98	1.00	1.00	1.00	.98	1.00	1.00	1.00	1.00

(h) $\beta = 0.13^{\circ}$, $\delta_e = -10^{\circ}$, $\delta_a = 0^{\circ}$, $\delta_r = 0$

	Angle of attack α (deg)									
	–0.2	4.0	8.2	12.3	16.5	20.7	24.9	29.0	33.0	37.0
Nose P_t	0.99	1.00	0.99	1.00	0.98	0.96	0.87	–	–	–
Nose P_s	.09	.06	.06	.06	.04	.04	.04	–	–	–
Fin P_t	–	–	.98	.98	.96	.96	.98	.93	.95	.92
Fin P_s	–	–	–.04	–.06	–.11	–.15	–.21	–.26	–.26	–.50
Nose Shrouded P_t	–	–	.98	.98	.98	.98	1.00	1.00	1.00	.95

(i) $\beta = 0.13^{\circ}$, $\delta_e = -10^{\circ}$, $\delta_a = 0^{\circ}$, $\delta_r = -10^{\circ}$

	Angle of attack α (deg)								
	4.0	8.2	12.3	16.5	20.7	25.0	29.0	33.0	37.0
Fin P_t	0.98	0.98	0.98	0.98	0.98	0.96	0.91	0.92	0.92
Fin P_s	.02	–.02	–.06	–.11	–.13	–.19	–.26	–.38	–.49

TABLE 42.– CONCLUDED

(j) $\beta = -10.06^{\circ}$, $\delta_e = -10^{\circ}$, $\delta_a = 0^{\circ}$, $\delta_r = -10^{\circ}$

	Angle of attack α (deg)								
	4.0	8.2	12.3	16.5	20.7	24.8	28.9	32.9	36.9
Fin P_t	0.86	0.84	0.80	0.72	0.70	0.65	0.60	0.22	-0.37
Fin P_s	-.14	-.16	-.18	-.23	-.26	-.35	-.47	-.76	-.82

(k) $\beta = 9.98^{\circ}$, $\delta_e = -10^{\circ}$, $\delta_a = 0^{\circ}$, $\delta_r = -10^{\circ}$

	Angle of attack α (deg)								
	4.0	8.2	12.3	16.5	20.7	24.8	28.9	32.9	36.9
Fin P_t	0.78	0.77	0.72	0.65	0.62	0.61	0.60	0.47	-0.35
Fin P_s	-.20	-.21	-.28	-.30	-.36	-.41	-.48	-.71	-.86

(l) $\beta = -10.06^{\circ}$, $\delta_e = -10^{\circ}$, $\delta_a = 0^{\circ}$, $= \delta_r = -20^{\circ}$

	Angle of attack α (deg)								
	4.0	8.2	12.3	16.5	20.7	24.9	28.9	32.9	36.9
Fin P_t	0.90	0.87	0.85	0.81	0.78	0.72	0.62	0.10	-0.59
Fin P_s	-.10	-.11	-.15	-.19	-.22	-.32	-.45	-.72	-.82

(m) $\beta = 9.98^{\circ}$, $\delta_e = -10^{\circ}$, $\delta_a = 0^{\circ}$, $\delta_r = -20^{\circ}$

	Angle of attack α (deg)								
	4.0	8.2	12.3	16.5	20.7	24.9	28.9	32.9	36.9
Fin P_t	0.75	0.69	0.65	0.59	0.56	0.56	0.61	0.51	-0.26
Fin P_s	-.17	-.20	-.29	-.33	-.37	-.40	-.46	-.69	-.79

(n) $\beta = 0.13^{\circ}$, controls neutral, tail cone blocked

	Angle of attack α (deg)									
	0	4.2	8.4	12.5	16.7	20.9	25.0	29.1	33.1	37.1
Nose P_t	1.01	1.00	1.00	0.99	0.99	0.97	0.86	0.86	0.78	0.71
Nose P_s	.08	.08	.08	.08	.06	.06	.03	.01	0	.01

TABLE 43.- READINGS OF THE ANGLE-OF-ATTACK AND SIDESLIP ANGLE INDICATORS

(a) Angle-of-Attack Indicator Static Calibration

α	0	4	8	12	16	20	24	28	32	36
α Indicator[1]	258	277	303	334	368	39	61	81	105	132

(b) Sideslip Indicator Static Calibration

β	-20	-15	-10	-5	0	5	10	15	20
β Indicator[2]	94	117	148	180	212	240	277	309	342

(c) $\beta = 0.13^{\circ}$, Controls Neutral

α	0	4.2	8.3	12.5	16.7	20.9	25.0	29.1	33.1	37.1
α Indicator	269	285	315	348	30	53	77	115	135	135
β Indicator	210	207	206	206	211	211	215	217	220	230

(d) $\beta = -5.00^{\circ}$, Controls Neutral

α	0.1	4.2	8.4	12.6	16.7	20.9	25.0	29.1	33.0	37.0
α Indicator	270	288	320	354	30	50	78	115	138	138
β Indicator	178	178	179	180	180	179	177	175	175	178

(e) $\beta = -10.06^{\circ}$, Controls Neutral

α	0.1	4.2	8.4	12.6	16.7	20.9	25.0	29.0	33.1	37.0
α Indicator	272	285	320	352	28	54	75	115	140	142
β Indicator	146	146	146	148	146	140	138	135	135	132

(f) $\beta = -15.20^{\circ}$, Controls Neutral

α	0	4.2	8.4	12.6	16.7	20.9	25.0	29.0	33.0	37.0
α Indicator	270	285	322	355	30	55	80	110	146	147
β Indicator	127	128	128	129	128	125	123	118	116	118

[1]Magnesyn Indicator No. 320004.

[2]Magnesyn Indicator No. 230005.

TABLE 43.– CONCLUDED

(g) $\beta = -20.20^{\circ}$, Controls Neutral

α	0	4.2	8.4	12.6	16.7	20.9	25.0	29.0	33.0	37.0
α Indicator	271	285	317	0	35	55	80	110	140	146
β Indicator	118	119	121	121	119	119	115	114	111	111

(h) $\beta = 9.98^{\circ}$, Controls Neutral

α	0.1	4.2	8.4	12.6	16.7	20.9	25.0	29.0	33.0	37.0
α Indicator	265	282	323	10	50	75	90	126	142	142
β Indicator	304	300	300	300	304	308	310	317	322	325

(i) $\beta = 0.13^{\circ}$, $\delta_e = -10^{\circ}$, $\delta_a = 0$, $\delta_r = 0$

α	-0.2	4.0	8.2	12.3	16.5	20.7	24.9
α Indicator	270	287	320	352	30	55	78
β Indicator	213	212	213	213	216	216	218

(j) $\beta = 0.13^{\circ}$, Controls Neutral, Tail Cone Blocked

α	0	4.2	8.4	12.5	16.7	20.9	25.0	29.1	33.1	37.1
α Indicator	270	288	320	354	30	52	80	110	140	140
β Indicator	210	207	208	210	212	215	215	220	225	225

(k) $\alpha = 0^{\circ}$, $\beta = 0.13^{\circ}$, Controls Neutral

q	9.88	14.35	22.89	31.98	45.50	63.42	80.85	98.80	125.60
α Indicator	272	270	270	270	270	270	270	270	270
β Indicator	213	210	209	208	210	210	210	208	208

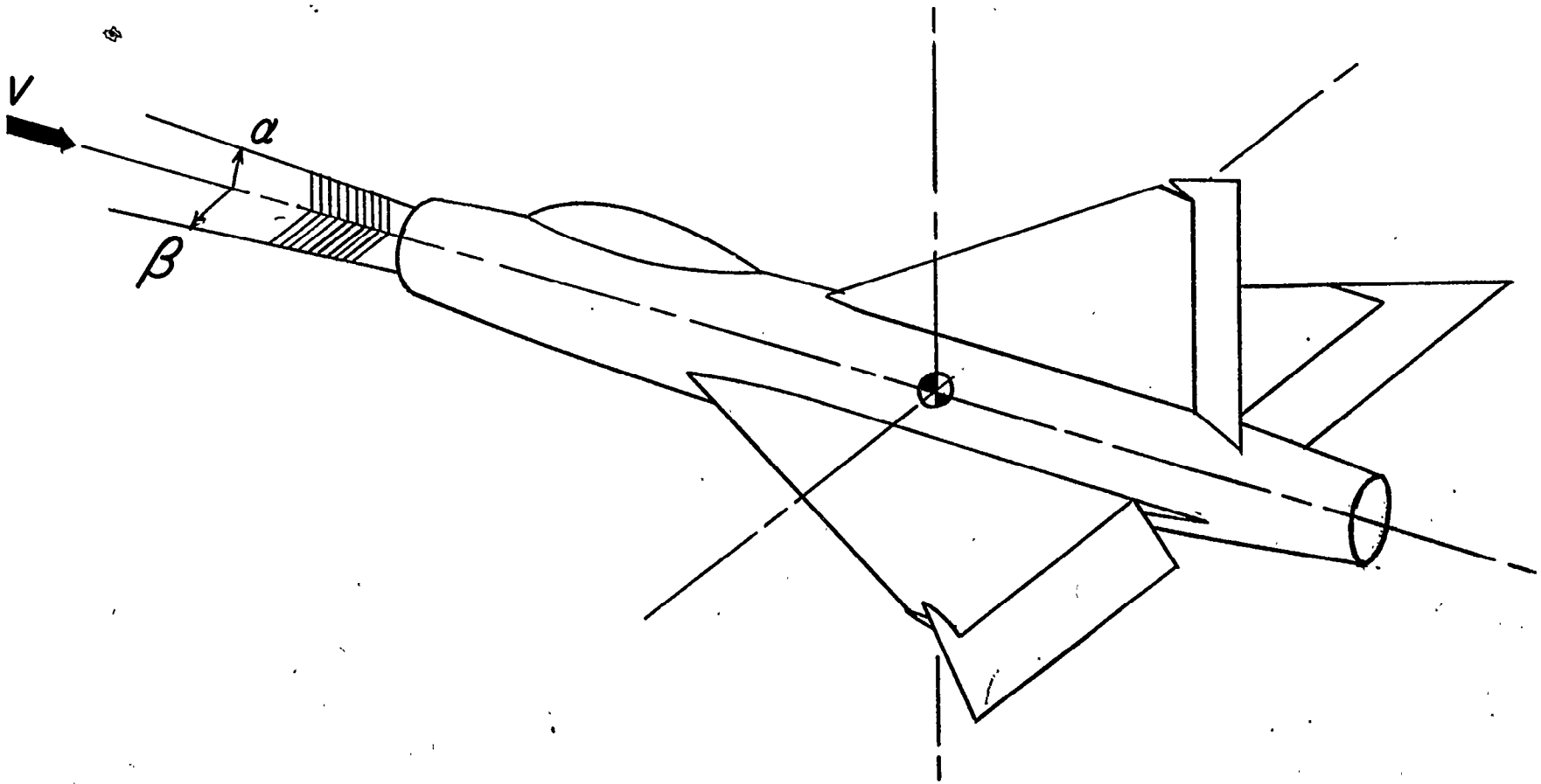

Figure 1.- Standard NACA convention for positive angles and control-surface deflections.

[redacted]

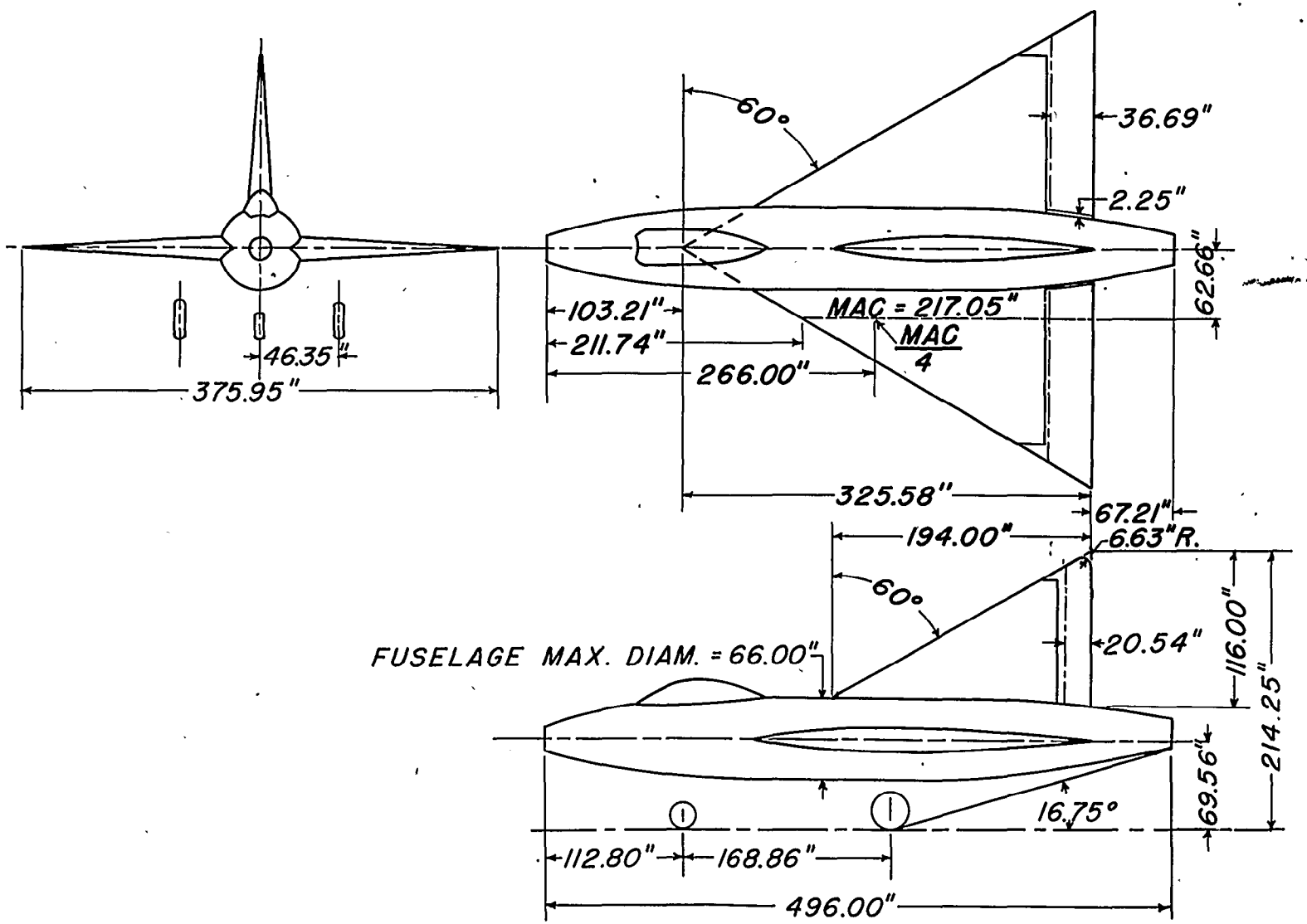

Figure 2.- Three-view drawing of the flying mock-up of the XP-92 airplane.

[redacted]

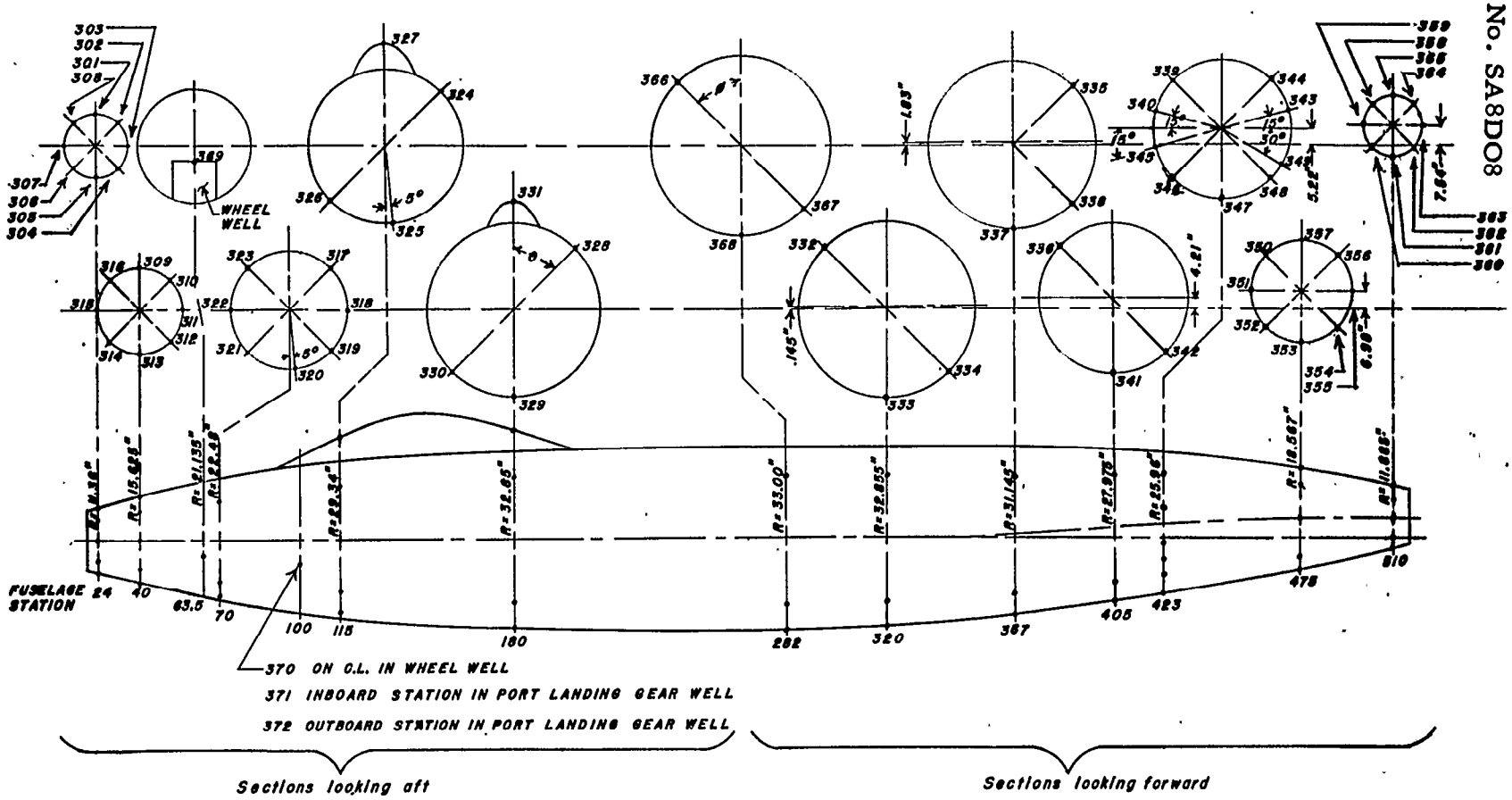

NOTE: $\theta = \phi = 45°$ except where otherwise noted

Figure 3.- Locations of static pressure orifices on the fuselage of the flying mock-up of the XP-92 airplane.

[redacted]

NATIONAL ADVISORY COMMITTEE FOR AERONAUTICS

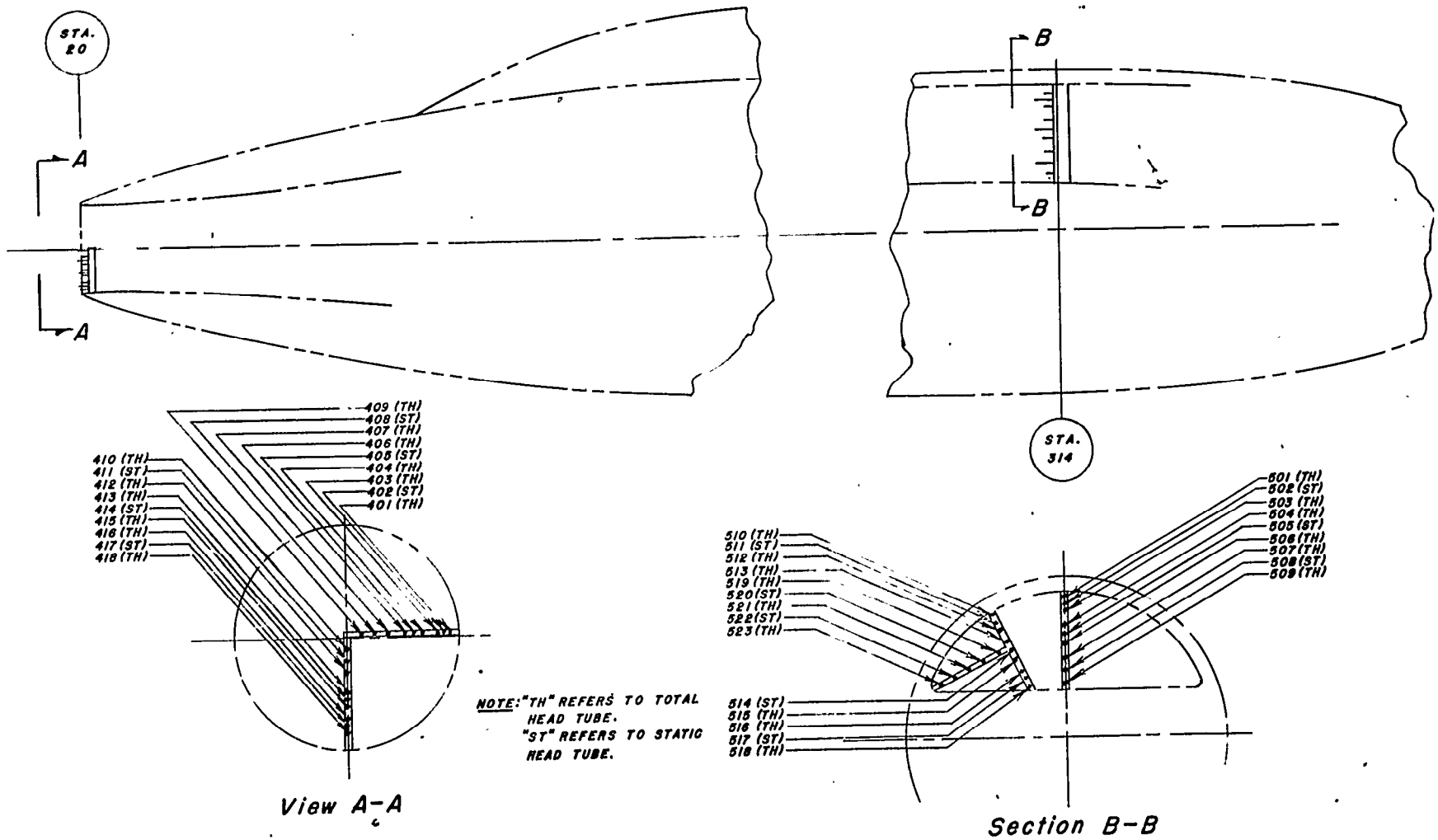

Figure 4.—Location of the pressure tubes in the fuselage-duct rakes.

[redacted]

NATIONAL ADVISORY COMMITTEE FOR AERONAUTICS

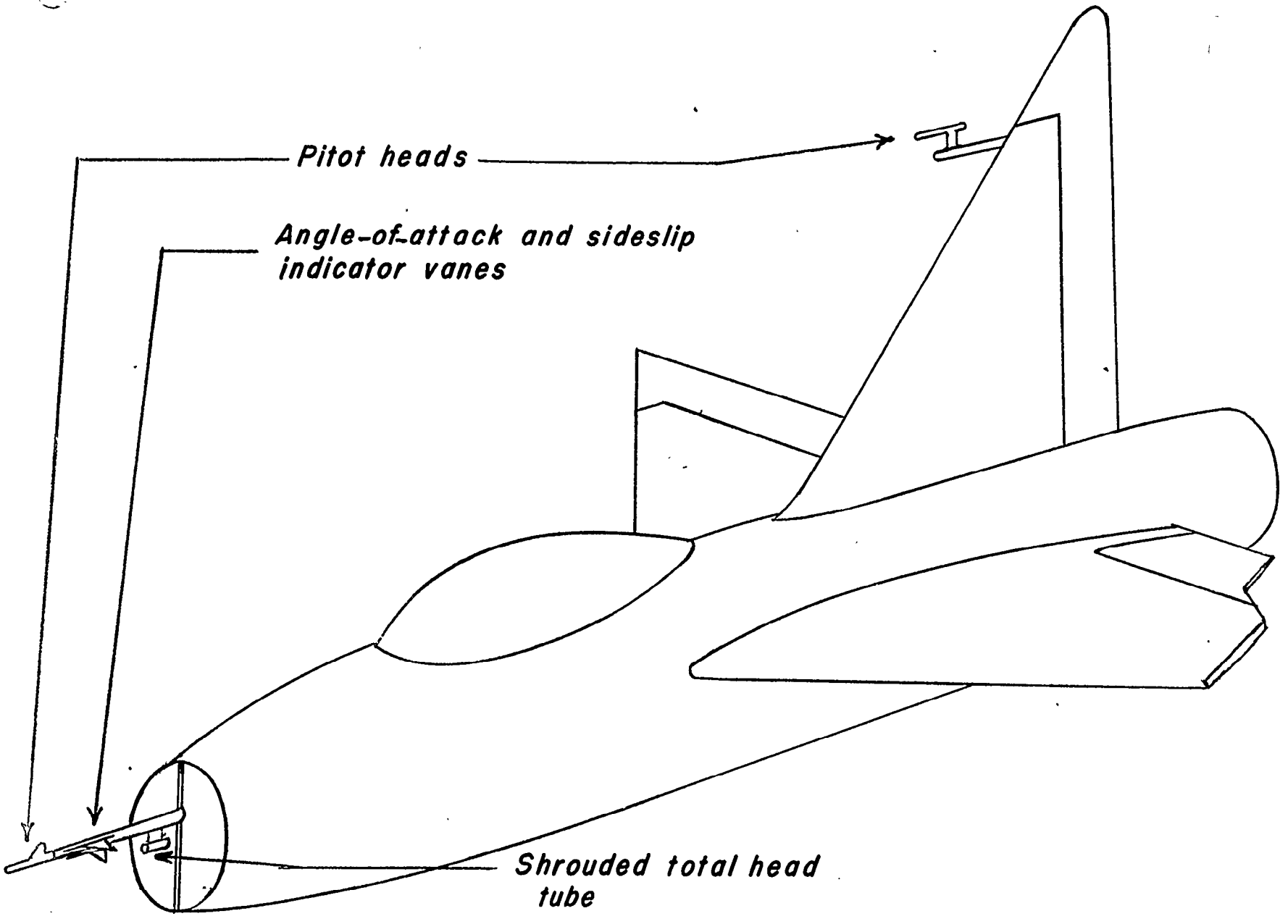

Figure 5.– Relative locations of the airspeed, angle-of-attack, and angle-of-sideslip indicators as installed on the flying mock-up of the XP-92 airplane.

[redacted]

NASA Technical Library
3 1176 01437 2800