RA. A19L88 R.O.1

CONFIDENTIAL

Copy 28
RM L55H09

UNCLASSIFIED

RESEARCH MEMORANDUM

CLASSIFICATION CHANGED
UNCLASSIFIED
UNAVAILABLE
To
By authority of TPA #39 Date 11/13/61
REVIEW COPY

COMPARISON OF THE DRAG OF A FIN-STABILIZED BODY OF REVOLUTION AND OF A COMPLETE AIRPLANE CONFIGURATION AS OBTAINED AT TRANSONIC SPEEDS IN A SLOTTED WIND TUNNEL AND IN FREE FLIGHT

By Robert R. Howell and Albert L. Braslow

Langley Aeronautical Laboratory
Langley Field, Va.

CLASSIFIED DOCUMENT

This document contains classified information affecting the National Defense of the United States within the meaning of the Espionage Act, USC 18:793 and 794. Its transmission or the revelation of its contents in any manner to an unauthorized person is prohibited by law.

NATIONAL ADVISORY COMMITTEE
FOR AERONAUTICS

WASHINGTON

UNCLASSIFIED

CONFIDENTIAL

NASA Technical Library
3 1176 01438 0530

NATIONAL ADVISORY COMMITTEE FOR AERONAUTICS

RESEARCH MEMORANDUM

COMPARISON OF THE DRAG OF A FIN-STABILIZED BODY OF REVOLUTION AND OF A COMPLETE AIRPLANE CONFIGURATION AS OBTAINED AT TRANSONIC SPEEDS IN A SLOTTED WIND TUNNEL AND IN FREE FLIGHT

By Robert R. Howell and Albert L. Braslow

SUMMARY

A comparison of the zero-lift drag coefficients at Mach numbers from 0.81 to 1.41 of a fin-stabilized parabolic body of revolution as measured in the Langley transonic blowdown tunnel has been made with measurements obtained in free flight on a larger but geometrically similar model. The absolute values of drag coefficient obtained in the slotted wind tunnel were equivalent to the free-flight drag-coefficient values up to a Mach number of 1.4 when adjustments were made for the effect on viscous drag of differences in Reynolds number between the two test conditions. Excellent agreement was obtained between the two tests for the pressure-drag variation with Mach number, regardless of whether the scale effect on skin friction was considered. Favorable agreement was also obtained between the pressure-drag increments due to the presence of the stabilizing fins as determined in the wind tunnel from fins-on and fins-off tests and as obtained by a different method in free flight.

Tests of a specific airplane configuration to obtain an indication of the problems involved in the construction and tests of small-scale (approximately 7-inch span) complete airplane configurations with internal air flow indicated that reliable zero-lift drag-coefficient measurements at Mach numbers up to 1.4 can be attained with such models, provided the model is constructed with a high but not an unreasonable degree of accuracy.

[redacted]

INTRODUCTION

Direct comparison of drag characteristics heretofore obtained in slotted wind tunnels with measurements made in free flight have been limited by the available Mach number range of the wind tunnels used to a Mach number of about 1.15. Inasmuch as the Langley transonic blowdown tunnel can be operated in the slotted condition to a Mach number of about 1.4, it was considered desirable to obtain a direct check of drag coefficients measured in this tunnel with free-flight results, especially in the range of Mach number between 1.15 and 1.4 because of the following reasons. First, it appeared possible that reflections of model disturbances from the tunnel walls might influence the model characteristics at these Mach numbers even when the reflections did not directly intersect the model because of a possible propagation of pressure impulses upstream through the model wake. Second, because a longitudinal variation of free-stream Mach number exists in the Langley transonic blowdown tunnel at Mach numbers from about 1.15 to 1.4, it is necessary to apply a correction to the drag data for this buoyancy effect, the magnitude of which is dependent upon the model size and location in the tunnel. A model of a low-drag fin-stabilized body of revolution was used to provide a careful evaluation of the drag characteristics. Zero-lift drag coefficients of this body were measured in the Langley transonic blowdown tunnel in the Mach number range between 0.81 and 1.41 and the results have been compared with data obtained on a larger but identically shaped configuration in free flight.

In addition, consideration had been given to the use of the Langley transonic blowdown tunnel as a relatively inexpensive, quick, and reliable method of obtaining the zero-lift pressure-drag variation with Mach number of specific complete aircraft configurations. Inasmuch as this wind tunnel is only 26 inches between the flats of the octagonal test section, an investigation was also made to determine the practical problems involved in construction, at the required small scale, of a typical airplane configuration having internal air flow and in making the desired measurements. These tests were made through a range of Mach number from 0.80 to 1.32.

SYMBOLS

A area

C_{D_T} total drag coefficient, $\dfrac{\text{Measured drag}}{q_o S}$

C_{D_b} base drag coefficient, $-\left(\frac{p_b - p_o}{q_o}\right)\frac{A_b}{S}$

C_{D_i} internal drag coefficient, $\frac{m(v_o - v_e)}{q_o S} - \frac{(p_e - p_o)}{q_o}\frac{A_e}{S}$

C_D net drag coefficient, $C_{D_T} - C_{D_b}$ for body of revolution or $C_{D_T} - C_{D_i} - C_{D_b}$ for the airplane configuration

ΔC_D pressure-drag coefficient rise, $C_D - C_{D_{M_o=0.9}}$

ΔC_{D_f} increment in pressure-drag coefficient rise due to the fins, $\left(C_D - C_{D_{M_o=0.9}}\right)_{\text{fins on}} - \left(C_D - C_{D_{M_o=0.9}}\right)_{\text{fins off}}$

S reference area; maximum body frontal area for the body of revolution (0.511 sq in.) or wing plan-form area for the airplane configuration (13 sq in.)

L total length of the body of revolution

m local mass flow, ρVA

$\frac{m_i}{m_o}$ mean inlet mass-flow ratio, $\frac{m_i}{\rho_o V_o A_i}$

M Mach number

p static pressure

q dynamic pressure, $0.7pM^2$

V velocity

r body radius

ρ mass density

R Reynolds number based on length of body of revolution or on wing mean aerodynamic chord of airplane model

x body longitudinal station

Subscripts:

b	base
i	inlet
e	exit
o	free stream
max	maximum

MODELS, APPARATUS, AND TESTS

Models

Fin-stabilized body.- The body shape tested is defined by the equation

$$r = r_{max} - a(0.6L - x)^2$$

where

$$a = \begin{Bmatrix} 0.01097 \text{ per in.}; & 0 < x < 0.6L \\ 0.01445 \text{ per in.}; & 0.6L < x < L \end{Bmatrix}$$

A sketch of the body tested is presented as figure 1 where the pertinent model body and fin dimensions are shown. A photograph of the model is presented as figure 2. All of the dimensions used in constructing the model were scaled down values of those presented in reference 1 which contains a description of the model used for the free flight tests.

The initial model was constructed of a polyester resin strengthened with glass fibers. The fins were lost, however, during the initial test run presumably due to flutter, and, subsequently, were reconstructed of a stiffer plastic material.

Airplane model.- The airplane model tested was a 1/52.6-scale model of a version of a specific airplane, a configuration which would provide a critical test of the construction problems involved. The ordinates

used to design the external shape of the model were scaled down from values measured on a larger model of the same airplane which was tested in free flight at zero lift by the Langley Pilotless Aircraft Research Division. A line drawing of the configuration is presented in figure 3, and the general dimensions are given in table 1.

The internal ducts aft of the twin air scoops were merged to a common duct of annular cross section which exited at the base of the model. The minimum duct area, which was located at the base of the model, amounted to 82.6 percent of the total inlet area.

The model was constructed of plastic cast around steel inserts in the wing and tail and with steel ducting and balance shield to provide the required stiffness and strength to avoid aeroelastic deflection and flutter. Photographs of the airplane model are presented as figure 4.

Apparatus

Both the body of revolution and the airplane model were mounted to single-component internal strain-gage balances which were sting supported in the wind tunnel (figs. 1 and 3). The body of revolution was set at zero angle of attack by use of a sensitive inclinometer. The airplane model was set at close to zero lift by adjusting the angle of attack until zero vertical aerodynamic moment was recorded by a strain gage attached to the sting some distance behind the model.

The base pressures for both models were measured by inserting an open end tube through the center of the sting into an open section of the balance. In the case of the airplane configuration, a total-pressure rake consisting of six total-pressure tubes (fig. 5) was used to measure the total pressure of the internal flow as it exited from the model. The average of these total pressures in conjunction with the measured static pressure was used to determine the inlet mass-flow ratio and the drag due to the internal flow at subsonic speeds. At supersonic speeds, the exit was choked, and the measured total pressures determined the static pressure that was used in the calculations.

All of the measured pressure data were recorded on quick-response flight-type pressure recorders. The drag force measurements were recorded by photographing self-balancing potentiometers.

Tests

The tests were made in the Langley transonic blowdown tunnel. This tunnel has a slotted test section of octagonal cross section with 26 inches between flats. Previous experience in testing models of the same size in

this wind tunnel has indicated that the model drag forces are affected by the intersection of wall-reflected model disturbances with the model in the Mach number range between about 1.04 and 1.13. Therefore, no drag data are presented for this Mach number range.

In order to avoid the effect on drag due to a possible variation in location of the boundary-layer transition point, both of the models were tested with transition fixed by roughness strips. These strips were constructed by blowing 0.001- to 0.002-inch-diameter carborundum particles on a strip of wet shellac. For the body of revolution, a 1/4-inch-wide roughness band was placed around the model 1 inch behind the nose of the body. Tests were also made with this model smooth to determine the effect of roughness on the drag level of the body. For the airplane model, 1/8-inch-wide roughness strips were placed on both wing surfaces 10 percent of the local chord behind the wing leading edge. There was also a 1/8-inch-wide band around the nose of the fuselage located 1/2 inch behind the nose boom-fuselage intersection (fig. 3). No roughness strips were applied to the tail surfaces of either model. Inasmuch as the wetted area of the tail surfaces influenced by possible changes in extent of laminar flow was small compared to the total wetted area of the entire configuration, differences in the extent of laminar flow on the tails would cause no significant change in the viscous drag of the models.

The major portion of the tests of the fin-body combination was run at a reduced stagnation pressure of 25 psia in an effort to avoid excessive fin loads and thereby insure retainment of the fins for the duration of the tests. After testing was completed at 25-psia stagnation pressure, some additional check test points were obtained at 50-psia stagnation pressure. This higher stagnation pressure afforded better accuracy and a higher ultimate test Mach number. All the tests of the body without fins were made at 50-psia stagnation pressure. The tests of the airplane configuration were made entirely at 25-psia stagnation pressure as a result of the stress limitations of the balance used.

The Reynolds number variation was between about 0.67×10^6 and 0.75×10^6 per inch for the 25-psia stagnation-pressure tests and between about 1.3×10^6 and 1.4×10^6 per inch for the 50-psia stagnation-pressure tests. The corresponding Mach number ranges were between 0.74 and 1.32 for the 25-psia stagnation pressure and between 0.8 and 1.4 for the 50-psia stagnation pressure.

The drag data measured at Mach numbers greater than about 1.15 were corrected for buoyancy effects resulting from longitudinal gradients in test section Mach number. This buoyancy correction was based on the model volume and the Mach number gradients measured in the test section with no model present.

Below is a table of the estimated maximum overall error in the faired curves for the indicated parameters:

C_D for -	
Body of revolution	±0.010
Airplane configuration	±0.0010
M_o	±0.01
C_{D_i}	±0.0005
C_{D_b} for -	
Body of revolution	±0.005
Airplane configuration	±0.0005
m_i/m_o	±0.01

RESULTS AND DISCUSSION

Fin-Stabilized Body

The drag data for the fin-stabilized body of revolution are presented in coefficient form in figure 6. Presented are total drag coefficient, base drag coefficient, and net drag coefficient as a function of the free-stream Mach number. The differences in drag coefficient due to placing the roughness band around the nose of the wind-tunnel model were small and generally within the scatter of test data.

For comparative purposes, the corresponding drag coefficients as obtained from free-flight tests (refs. 1 and 2) are also presented in figure 6. It should be pointed out that the free-flight base drag coefficients presented are not those actually measured on the present body shape. A comparison of base pressures measured on the present body shape in free flight with other free-flight base pressure measurements indicated that the present free-flight results were in error, probably due to the effect on the base pressure measurements of an unintentional burning of a residue of rocket propellant. Hence, the base pressure drag obtained from base pressures measured in free flight on another body having an identical afterbody and fin, and a different nose but with no apparent rocket propellant residue in the model (ref. 2) has been used in the present analysis. The difference in base drag measurements indicated in figure 6 between the wind-tunnel and free-flight tests is believed to be due primarily to the effect on the wind-tunnel results of the presence of the model support sting. This difference is not considered important, however, since its magnitude is generally small enough to be well within the combined accuracy of the two sets of measured results.

A comparison of the variation of the pressure-drag-coefficient increment with Mach number as obtained from the two test techniques is

presented in figure 7. This increment, as presented, is the drag-coefficient increase at Mach numbers greater than 0.8. As can be seen, very good agreement was obtained between the free-flight and wind-tunnel results.

The faired net drag coefficients of the fin-body combination as obtained from the basic data results of the two test techniques are replotted in figure 8. This figure indicates a large difference in the absolute level of the drag coefficient throughout the Mach number range. The Reynolds numbers for the free-flight tests, however, were much larger than for the wind-tunnel tests - 30×10^6 to 70×10^6 as compared with 6.8×10^6 to 7.6×10^6. Inasmuch as the flight Reynolds numbers were large enough to result in turbulent boundary-layer flow over the major part of the configuration and the transition strips insured turbulent flow over the wind-tunnel model, the difference in drag coefficient is attributed to the difference in turbulent skin friction between the two tests. The wind-tunnel results, therefore, were adjusted by decreasing the drag coefficients an amount equivalent to the decrease in turbulent skin-friction coefficient of the component parts of the configuration (body and fins) resulting from an increase in Reynolds number from the tunnel to flight values. The turbulent skin-friction data of reference 3 were used for this adjustment at each Mach number. As indicated in figure 8, the absolute values of the wind-tunnel drag coefficients adjusted to the free-flight Reynolds numbers agree very well with the free-flight measurements.

A further indication of the correctness of the measured absolute level of the wind-tunnel drag results and thereby the correctness of the Reynolds number adjustment can be obtained from a comparison of the total drag characteristics of the wind-tunnel model with those of a very similar configuration tested in free flight at Reynolds numbers about equal to the wind-tunnel values (fig. 9). This free-flight model (ref. 4) differed from the present configuration by only a negligible difference in forebody fineness ratio. The nose fineness ratio was 7.50 for the wind-tunnel model and 7.13 for the free-flight model. No base pressures were measured on this free-flight model, hence, the comparison of results from the two test techniques can be made on the basis of total drag coefficient only. Based on the previous comparison of base pressure drags (fig. 6), however, it would appear that the base pressure differences could be neglected for the present afterbody shape thereby justifying for this case the direct comparison of total drag coefficients. It should be mentioned that the surface condition of the free-flight model was such that any difference in drag coefficient due to possible laminar flow is believed to be negligible. The comparison presented in figure 9 substantiates the previous results in that agreement was obtained between the absolute values of drag coefficient measured in free flight and in the wind tunnel in addition to agreement in the values of pressure-drag coefficient if the Reynolds number effect is accounted for.

The increment in pressure-drag coefficient due to the presence of the fins ΔC_{D_f} is presented in figure 10 as a function of Mach number. Presented for comparison are some unpublished results as obtained in free flight by a somewhat different technique. This technique involved measurement of the drag of fin-stabilized cone-cylinder combinations and calculations of the pressure drag associated with the cone. Excellent agreement was obtained except in the speed range near Mach number 1.0 where some small differences in fin pressure drags are indicated.

Airplane Model

The results of the investigation of the 1/52.6-scale airplane model are presented in coefficient form as a function of Mach number in figure 11. The faired net-drag-coefficient curve is reproduced in figure 12 for comparative purposes. Presented also are the subsonic net drag coefficients of an earlier version of the airplane as measured in the Langley 8-foot transonic tunnel and in the Langley low-turbulence pressure tunnel. The low-turbulence pressure-tunnel results have been heretofore unpublished. All the wind-tunnel data have been adjusted as previously described for Reynolds number effects to correspond to the free-flight data, which are also presented in the same figure. The configuration used in these previous wind-tunnel tests had essentially the same wetted area as the present configuration but a somewhat different longitudinal area development. The subsonic or viscous drags should be comparable, therefore, whereas the pressure-drag variations with Mach number should not necessarily correspond.

All the wind-tunnel subsonic drag coefficients presented appear to be in agreement. The estimated value of subsonic skin-friction drag coefficient based on a flat plate area equivalent to the configuration wetted area is slightly lower than the measured wind-tunnel values as would be expected. The reason for the higher values of subsonic drags obtained in free flight as compared with the wind-tunnel and estimated results is not understood.

At supersonic speeds, the drag coefficients obtained from the wind-tunnel tests and adjusted to the free-flight values of Reynolds number were greater than those obtained in free flight. After the wind-tunnel tests were complete, measurements were made to check the area development of the configuration. A comparison of these measurements with the design area development as obtained from measurements of the free-flight model is presented in figure 13. The indicated increases in cross-sectional area of the wind-tunnel model were found to result from increased thickness of the wing and tail surfaces as well as from a slight oversize in fuselage diameter. An average difference of 0.006 inch in the ordinates of the two models is the error required to account for the measured differences in cross-sectional area. From a consideration of the transonic

pressure-drag correlation of reference 5 as well as the increased wing- and tail-thickness ratio, it can be concluded that the differences in model ordinates can easily account for the differences in supersonic drag levels obtained between the wind-tunnel and free-flight tests.

These results therefore indicate the necessity for maintaining the model ordinates to a tolerance of less than 0.006 inch. Such a tolerance appears entirely reasonable through the use of female templates during the final check of the model contour. It appears, then, that specific airplane models having wing spans of about 7 inches can be constructed in sufficient detail to permit reliable determination in the Langley transonic blowdown tunnel of the variation of zero-lift drag coefficient with Mach number up to a Mach number of about 1.4 with a relatively low cost.

CONCLUDING REMARKS

A comparison of the zero-lift drag coefficients at Mach numbers from 0.81 to 1.41 of a fin-stabilized parabolic body of revolution as measured in the Langley transonic blowdown tunnel has been made with measurements obtained in free flight on a larger but geometrically similar model. The absolute values of drag coefficient obtained in the slotted wind tunnel were equivalent to the free-flight drag-coefficient values up to a Mach number of 1.4 when adjustments were made for the effect on viscous drag of differences in Reynolds number between the two test conditions. Excellent agreement was obtained between the two tests for the pressure-drag variation with Mach number regardless of whether the scale effect on skin friction was considered. Favorable agreement was also obtained between the pressure-drag increments due to the presence of the stabilizing fins as determined in the wind tunnel from fins-on and fins-off tests and as obtained by a different method in free flight.

Tests of a specific airplane configuration to obtain an indication of the problems involved in the construction and tests of small-scale (approximately 7-inch span) complete airplane configurations with internal air flow indicated that reliable zero-lift drag-coefficient measurements

at Mach numbers up to 1.41 can be attained with such models, provided the model is constructed with a high but not an unreasonable degree of accuracy.

Langley Aeronautical Laboratory,
National Advisory Committee for Aeronautics,
Langley Field, Va., August 1, 1955.

Robert R. Howell
Aeronautical Research Scientist

Albert L. Braslow
Aeronautical Research Scientist

Approved:

Eugene C. Draley
Chief of Full-Scale Research Division

sam

[redacted]

1. Hart, Roger C., and Katz, Ellis R.: Flight Investigations at High-Subsonic, Transonic, and Supersonic Speeds To Determine Zero-Lift Drag of Fin-Stabilized Bodies of Revolution Having Fineness Ratios of 12.5, 8.91, and 6.04 and Varying Positions of Maximum Diameter. NACA RM L9I30, 1949.

2. Katz, Ellis R., and Stoney, William E., Jr.: Base Pressures Measured on Several Parabolic-Arc Bodies of Revolution in Free Flight at Mach Numbers From 0.8 to 1.4 and at Large Reynolds Numbers. NACA RM L51F29, 1951.

3. Rubesin, Morris W., Maydew, Randall C., and Varga, Steven A.: An Analytical and Experimental Investigation of the Skin Friction of the Turbulent Boundary Layer on a Flat Plate at Supersonic Speeds. NACA TN 2305, 1951.

4. Stoney, William E., Jr.: Some Experimental Effects of Afterbody Shape on the Zero-Lift Drag of Bodies for Mach Numbers Between 0.8 and 1.3. NACA RM L53I01, 1953.

5. Nelson, Robert L., and Stoney, William E., Jr.: Pressure Drag of Bodies at Mach Numbers up to 2.0. NACA RM L53I22c, 1953.

5146 1

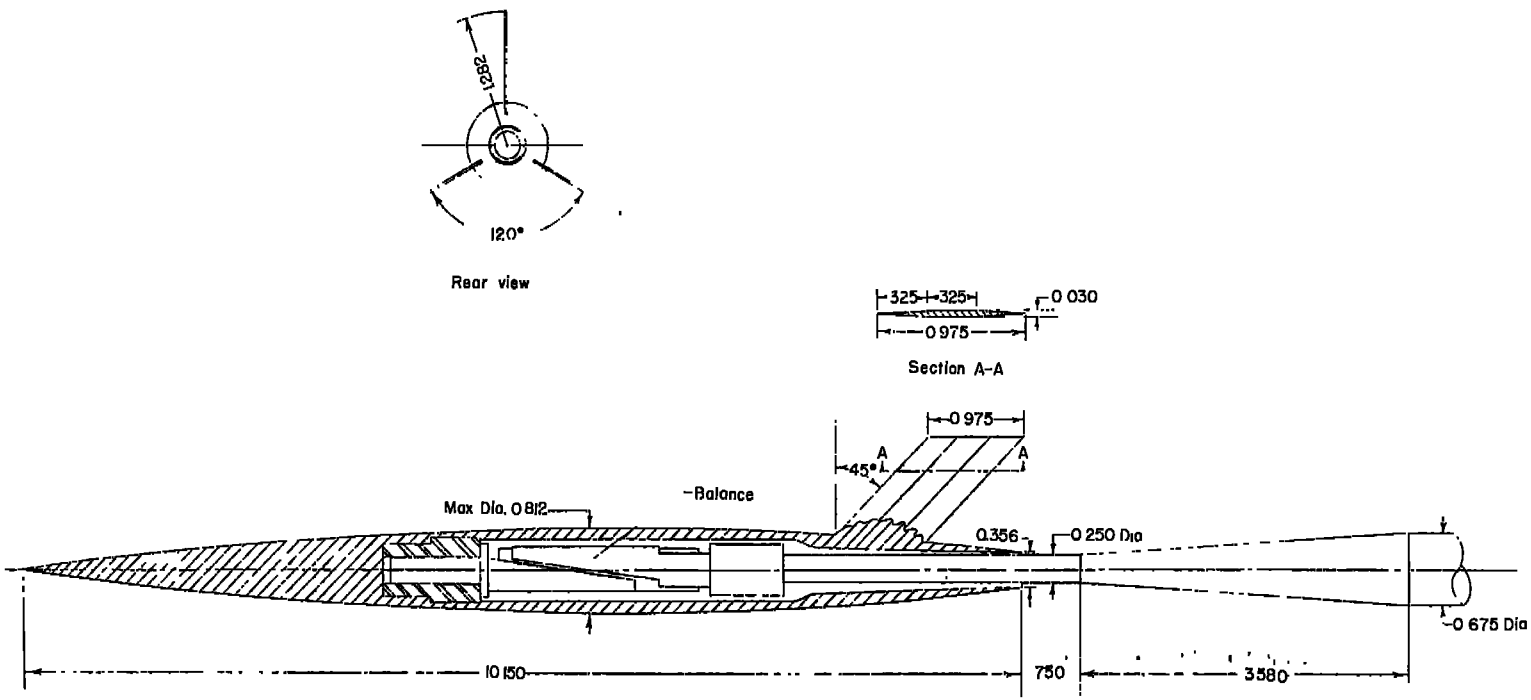

Figure 1.- Diagrammatic sketch showing model as mounted in wind tunnel. All dimensions are in inches.

Figure 2.- Photograph of the fin-stabilized model.

L-86628.1

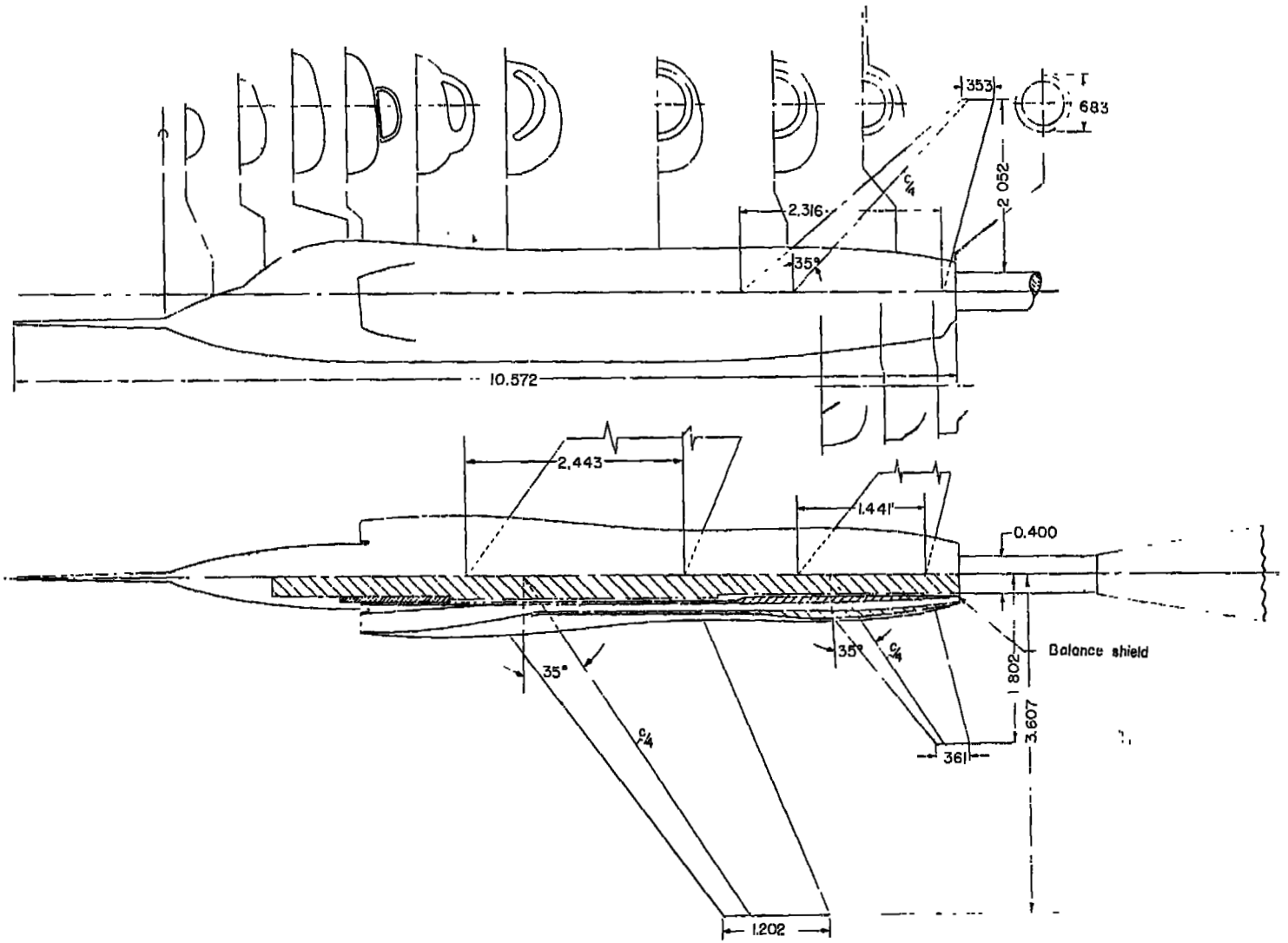

Figure 3.- Line drawing of the airplane configuration tested.

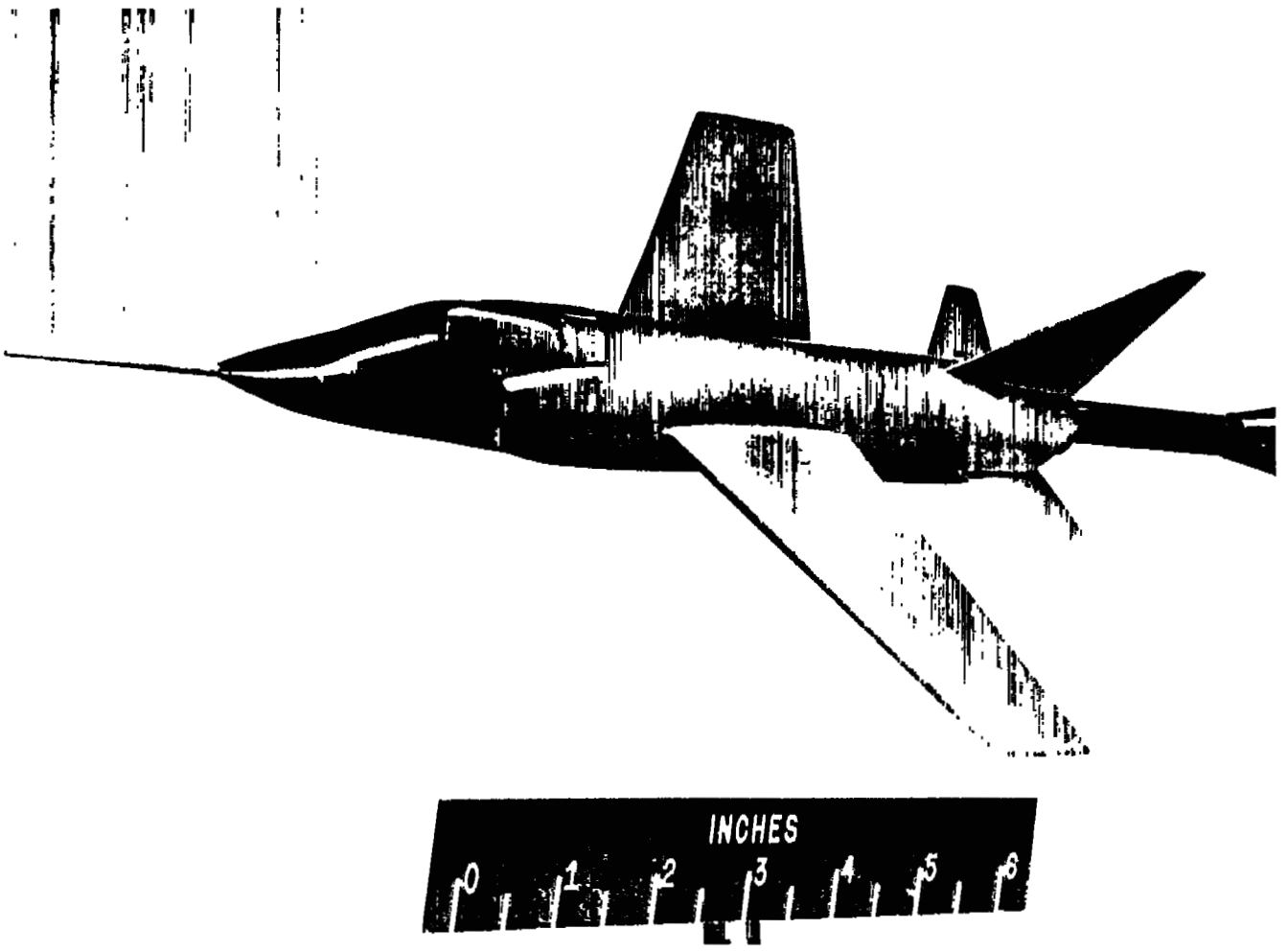

L-87296

(a) Three-quarter view from above model.

Figure 4.- Photographs of airplane model.

CONFIDENTIAL

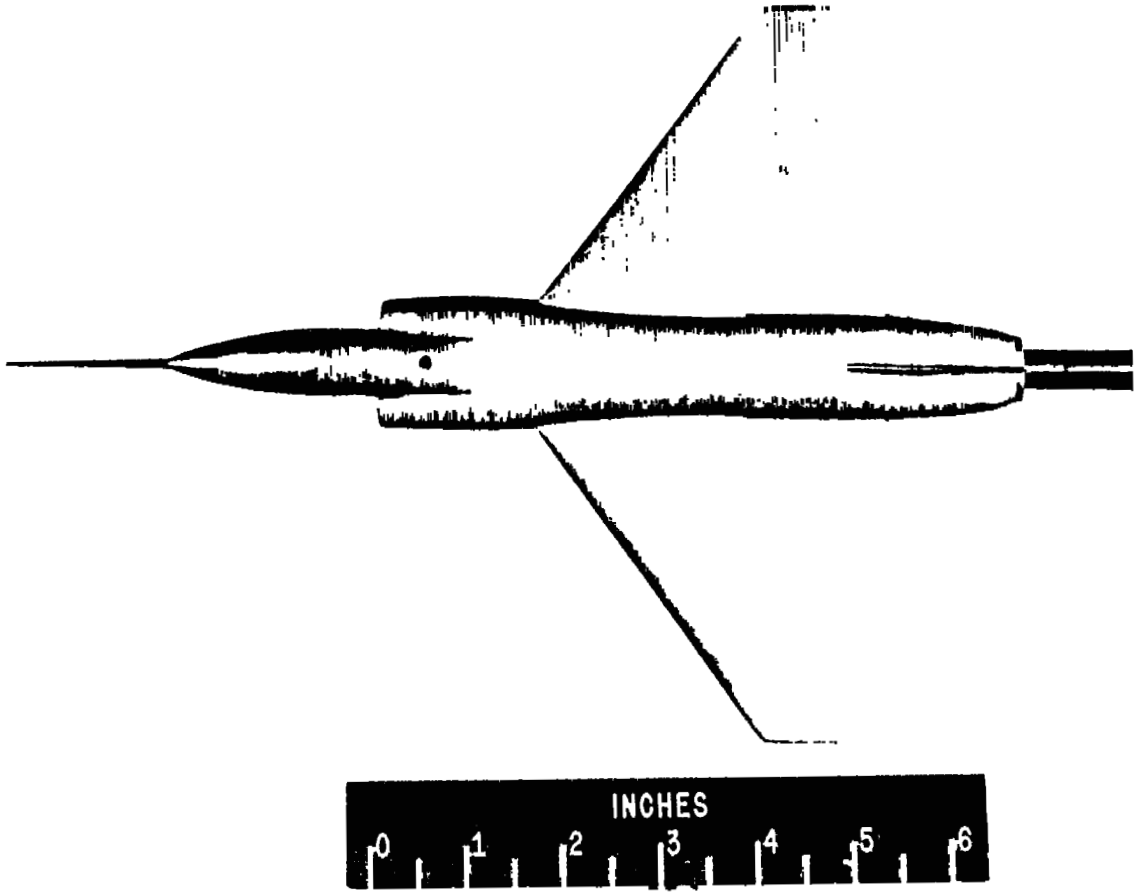

L-87295

(b) Plan view.

Figure 4.- Continued.

CONFIDENTIAL

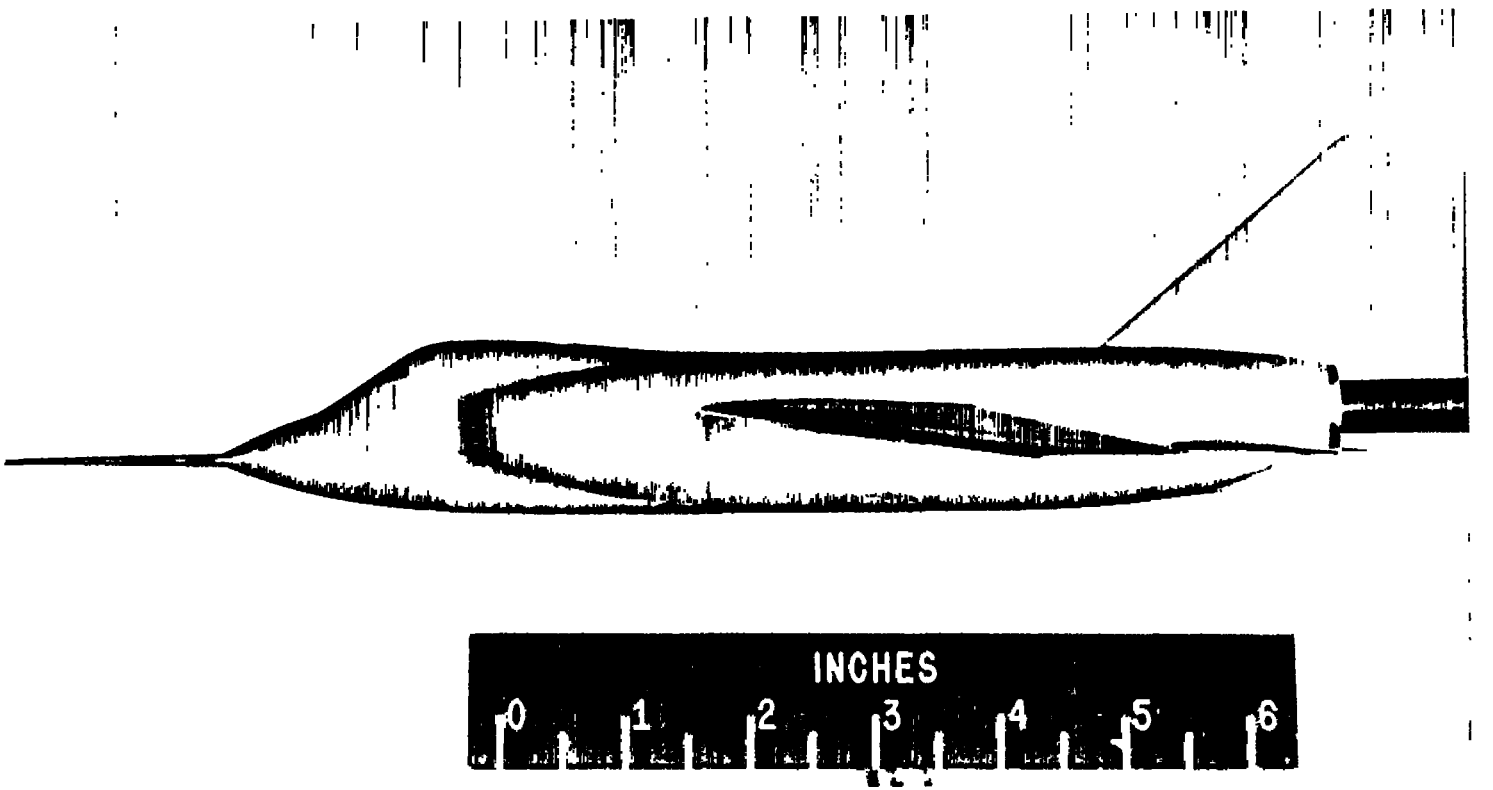

L-87294

(c) Side view.

Figure 4.- Concluded.

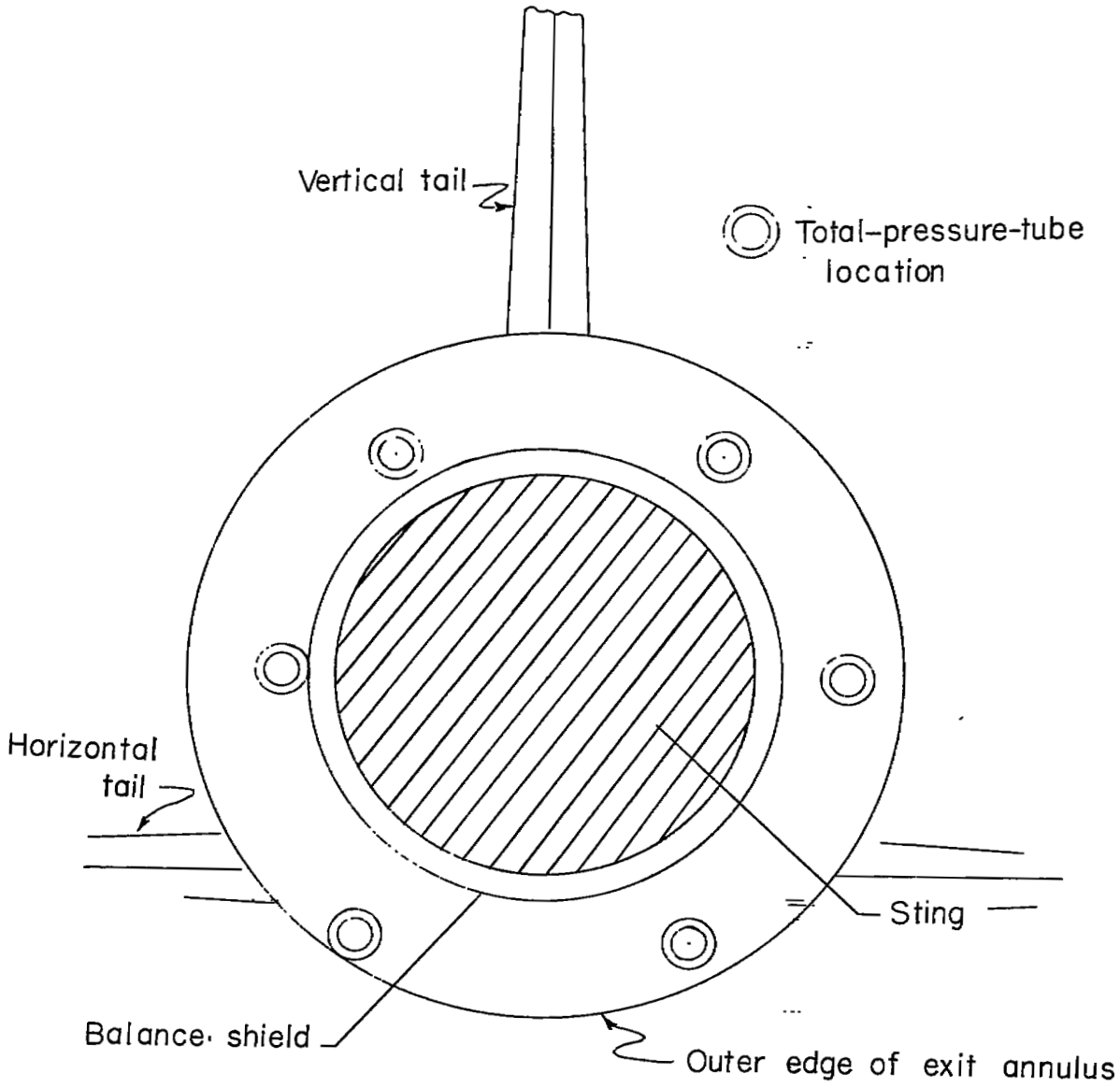

Figure 5.- Total-pressure-tube distribution at flow exit of airplane model.

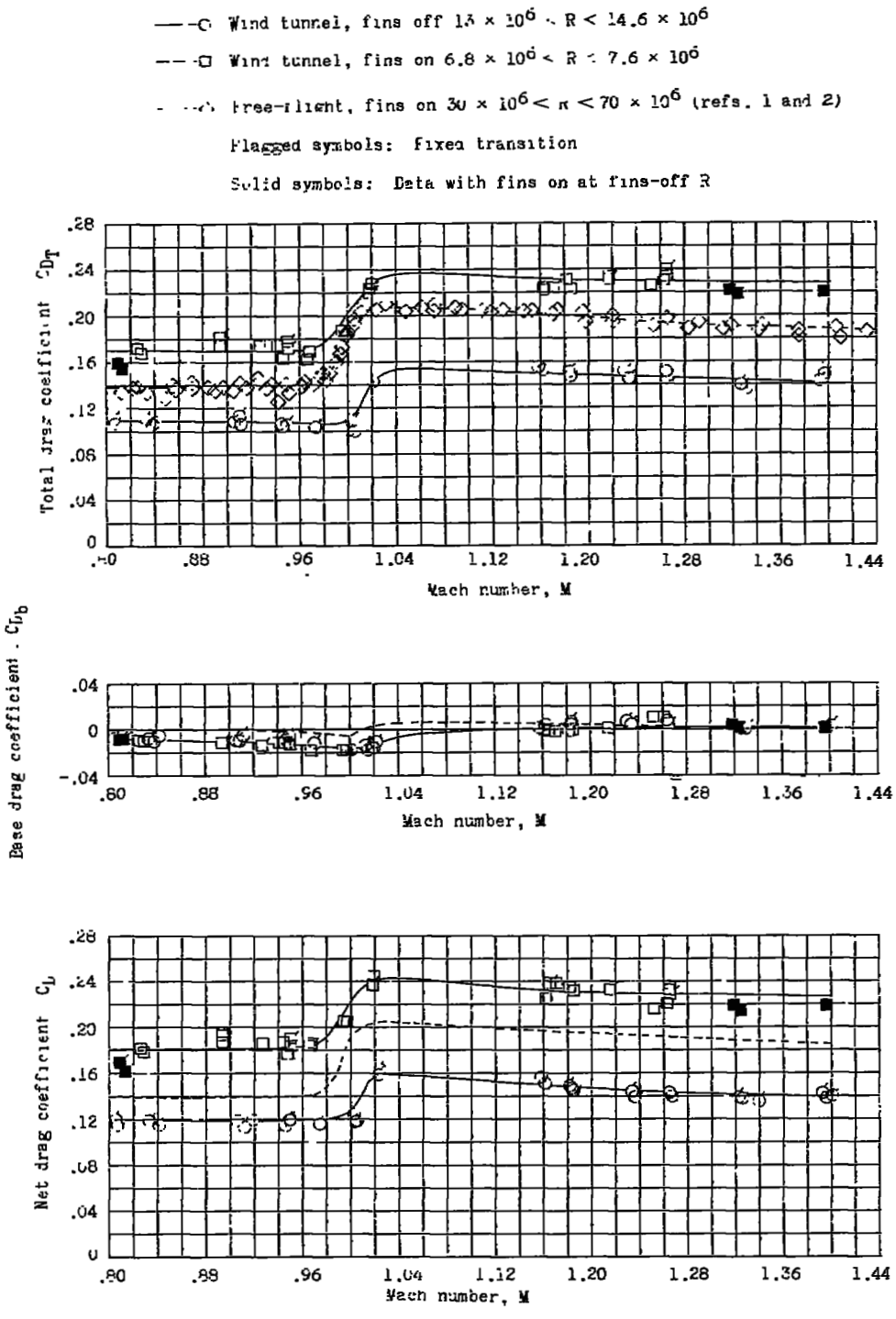

Figure 6.- Zero-lift drag-coefficient variation with Mach number for a fin-stabilized body of revolution as obtained from measurements in a slotted wind tunnel and in free flight.

5467

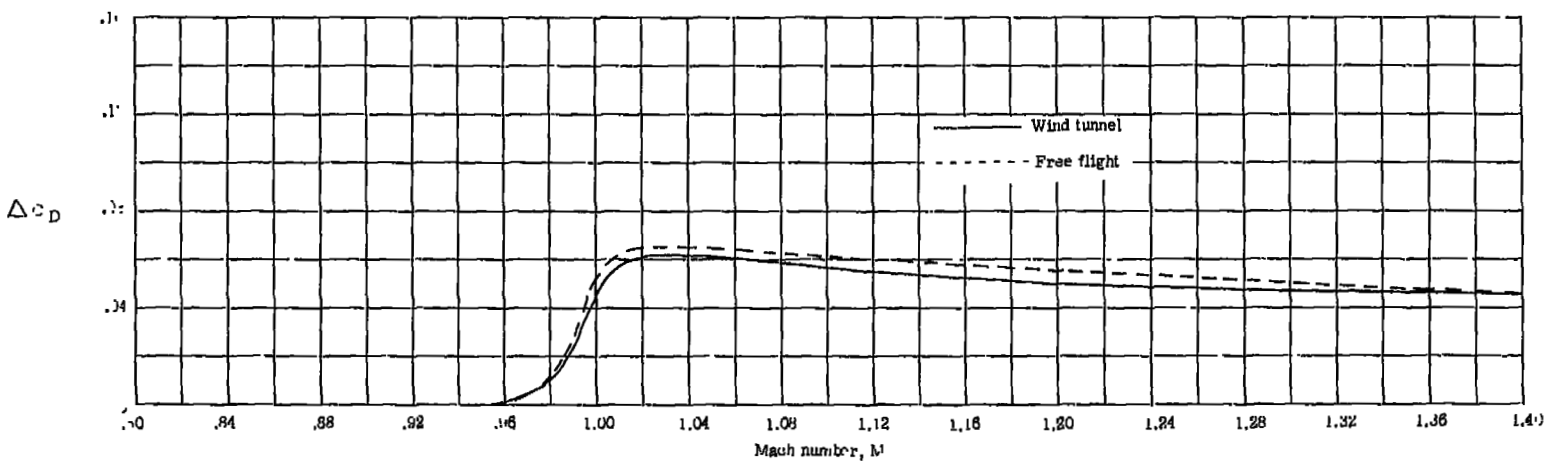

Figure 7.- Comparison of drag rise as obtained from wind-tunnel and free-flight data as a function of Mach number.

5146 8

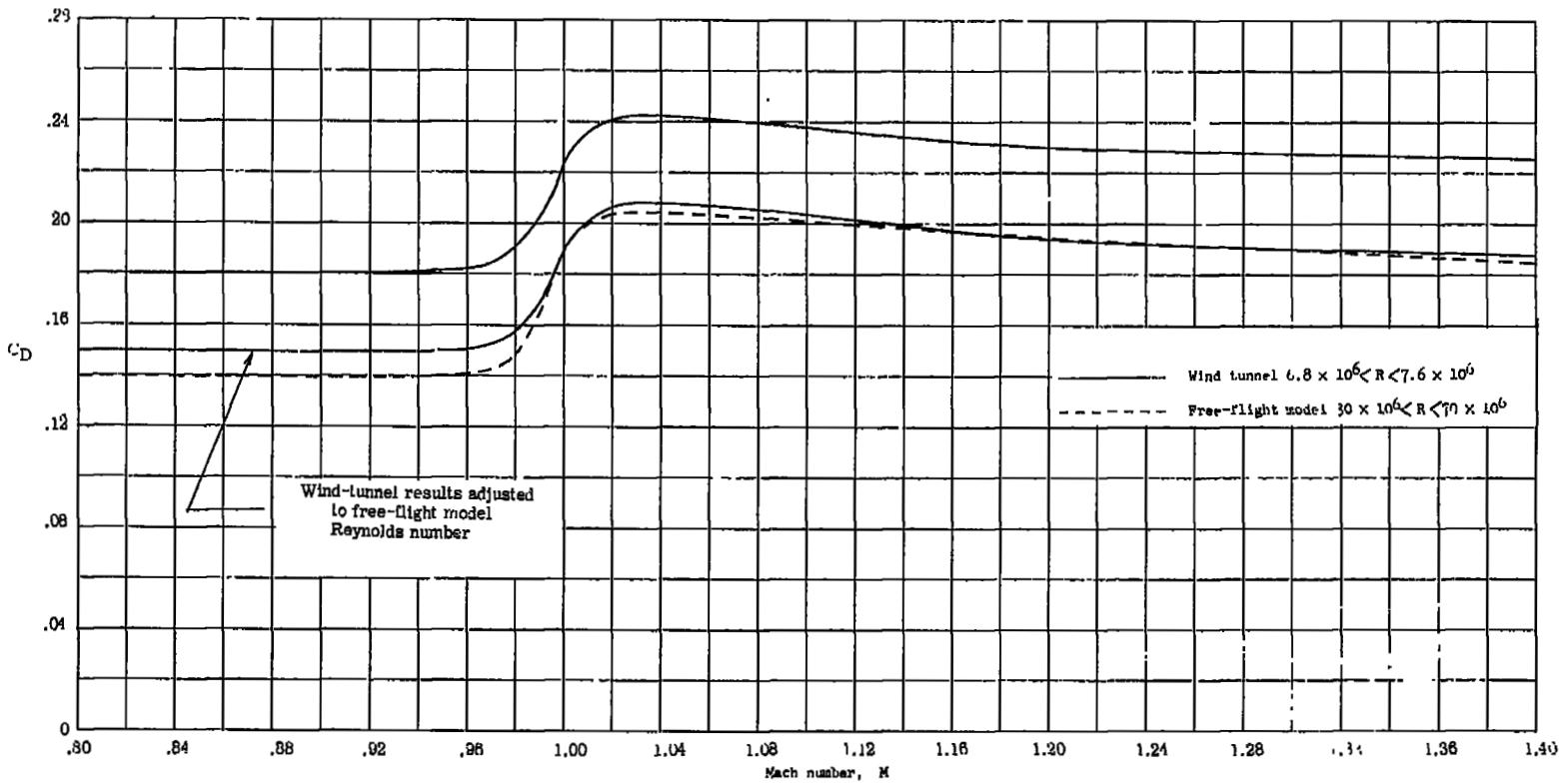

Figure 8.- Comparison of net drag coefficient as obtained from wind-tunnel and free-flight model tests.

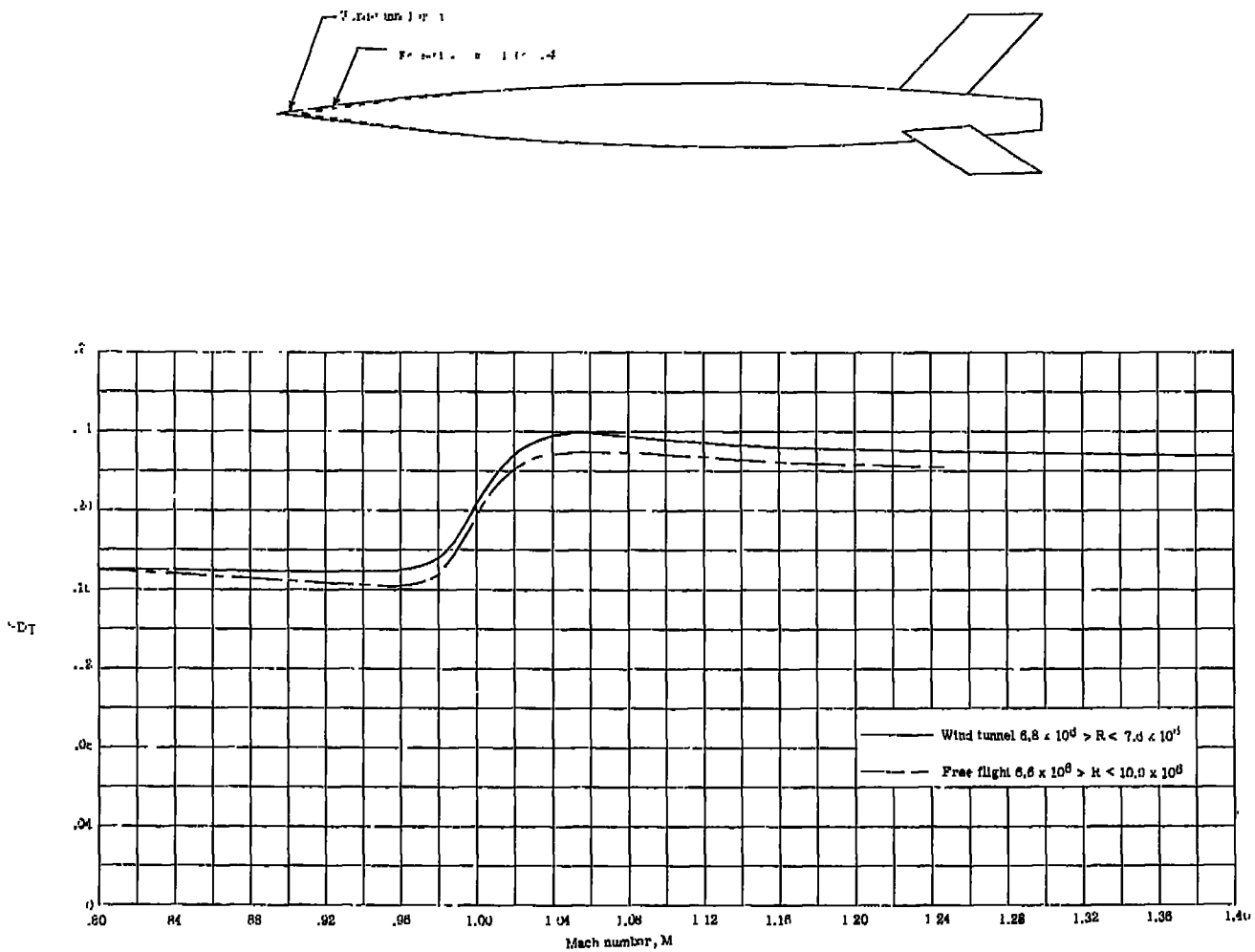

Figure 9.- Comparison of total drag coefficient as obtained from wind-tunnel and free-flight tests. Data unadjusted for base pressure differences.

514610

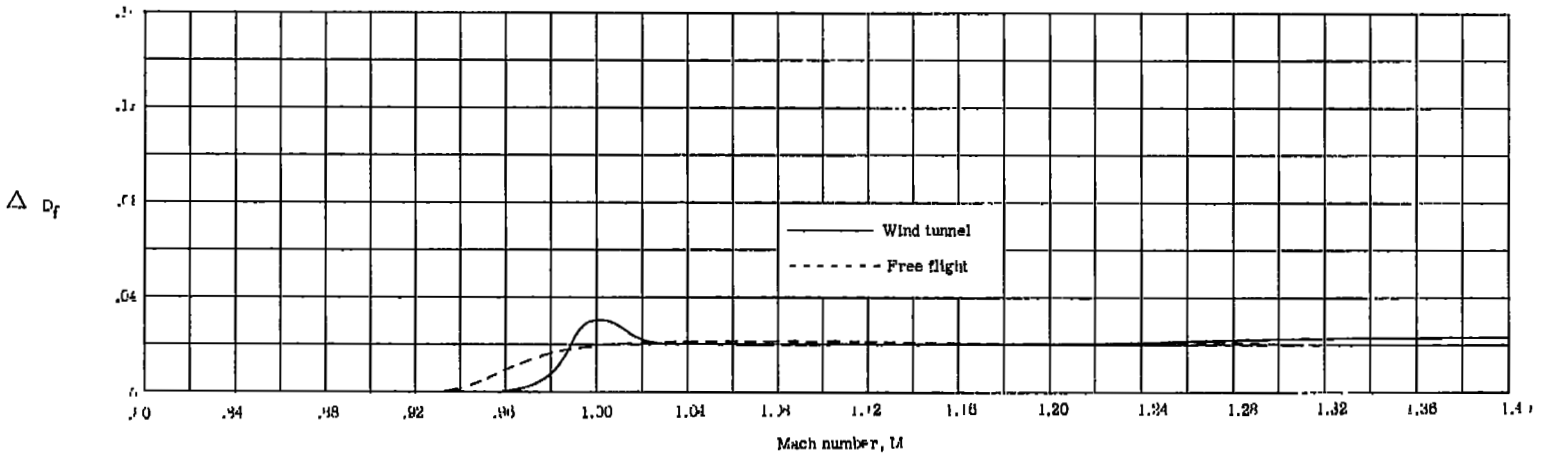

Figure 10.- Drag rise of fins and fin-body interference as a function of Mach number.

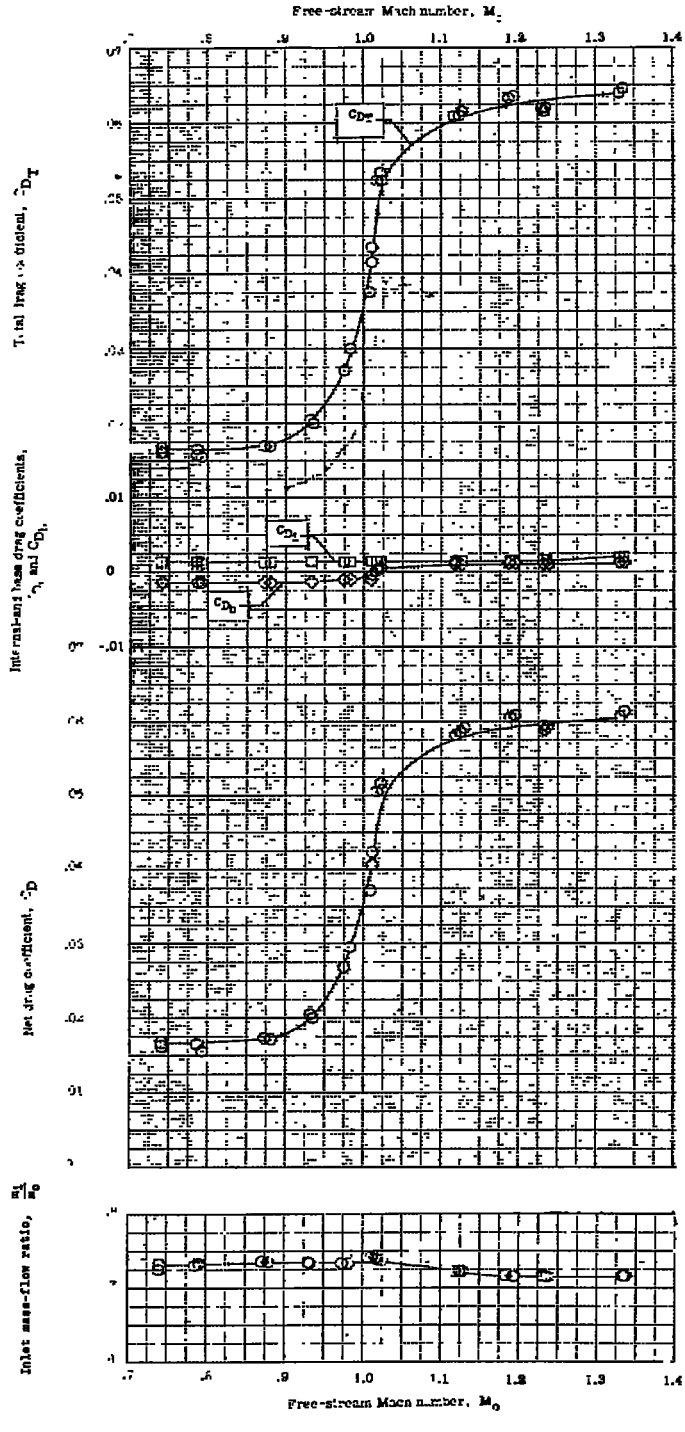

Figure 11.- The measured total, internal, base, and net drag coefficients and the measured inlet mass-flow ratios for the airplane configuration tested.

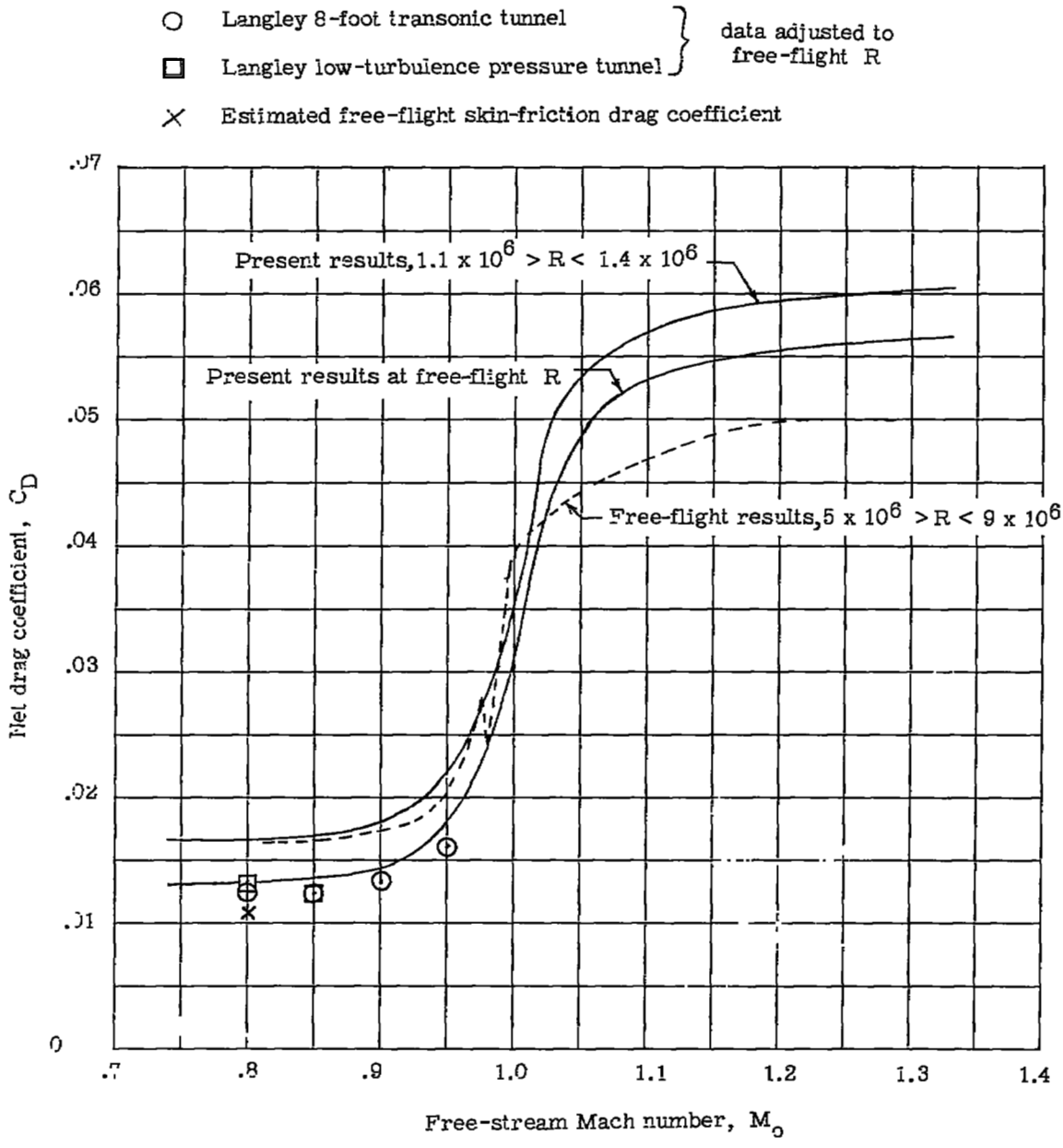

Figure 12.- Comparison of the net-drag-coefficient variation with Mach number of the airplane configuration as obtained with different test facilities.

51613

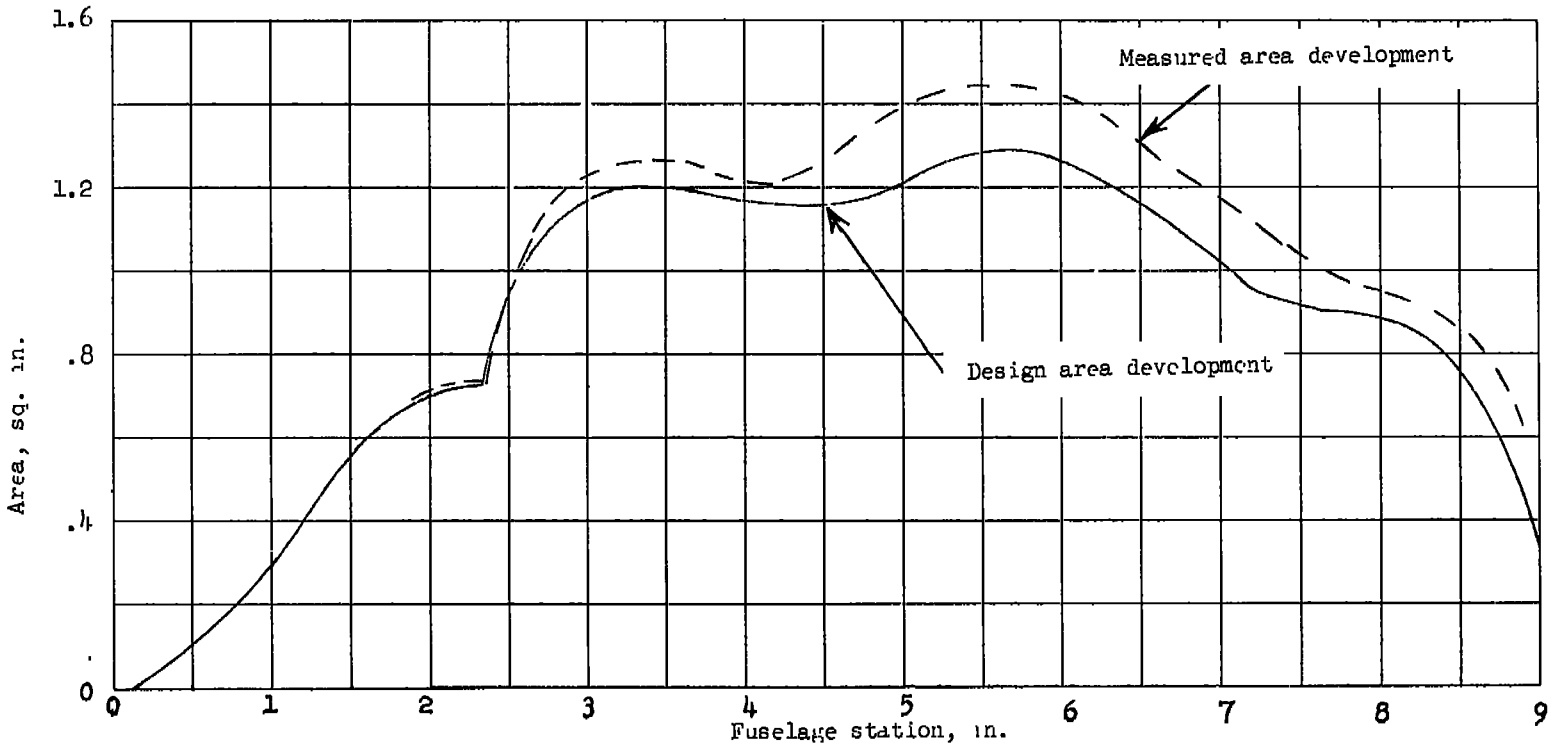

Figure 13.- Design and measured longitudinal area development of the airplane configuration tested.

INDEX

Subject	Number
Bodies	1.3
Tail-Wing-Fuselage Combinations - Airplanes	1.7.1.1.3
Airplanes - Specific Types	1.7.1.2

ABSTRACT

The zero-lift drag characteristics of a fin-stabilized body of revolution and of a specific airplane configuration as obtained in the Langley transonic blowdown tunnel at Mach numbers between 0.81 and 1.41 have been compared with the drag measurements of geometrically similar models obtained in free flight. The results obtained on the body of revolution indicated that agreement can be expected between the absolute values of drag coefficient measured in free flight and in the wind tunnel, in addition to agreement of the values of pressure drag if the effect on skin friction of any difference in Reynolds number between the two test methods is considered. The results also indicated that the variation of zero-lift drag coefficient with Mach number of specific airplanes can be determined reliably in the Langley transonic blowdown tunnel if the small (approximately 7-inch span) models required are constructed with a high but not an unreasonable degree of accuracy.

NASA Technical Library
3 1176 01438 0530