Copy No. 7

CONFIDENTIAL

RM No. L8H09

NACA RM No. L8H09

CLASSIFICATION CHANGED

UNCLASSIFIED

To

By authority of NACA Res abs RN-115 Date 5-3-57

al 5-23-57

RESEARCH MEMORANDUM

FLIGHT AND WIND-TUNNEL INVESTIGATION TO DETERMINE THE AILERON-VIBRATION CHARACTERISTICS OF $\frac{1}{4}$-SCALE WING PANELS OF THE DOUGLAS D-558-2 RESEARCH AIRPLANE

By

Ellwyn E. Angle and Reginald R. Lundstrom

Langley Aeronautical Laboratory
Langley Field, Va.

CLASSIFIED DOCUMENT

This document contains classified information affecting the National Defense of the United States within the meaning of the Espionage Act, USC 50:31 and 32. Its transmission or the revelation of its contents in any manner to an unauthorized person is prohibited by law. Information so classified may be imparted only to persons in the military and naval services of the United States, appropriate civilian officers and employees of the Federal Government who have a legitimate interest therein, and to United States citizens of known loyalty and discretion who of necessity must be informed thereof.

NATIONAL ADVISORY COMMITTEE FOR AERONAUTICS

WASHINGTON

November 30, 1948

CONFIDENTIAL

NASA Technical Library
3 1176 01436 6778

NATIONAL ADVISORY COMMITTEE FOR AERONAUTICS

RESEARCH MEMORANDUM

FLIGHT AND WIND-TUNNEL INVESTIGATION TO DETERMINE THE AILERON-VIBRATION CHARACTERISTICS OF $\frac{1}{4}$-SCALE WING PANELS OF THE DOUGLAS D-558-2 RESEARCH AIRPLANE

By Ellwyn E. Angle and Reginald R. Lundstrom

SUMMARY

A flight and wind-tunnel investigation was conducted by the NACA to determine the aerodynamic vibration characteristics of $\frac{1}{4}$-scale dynamically similar ailerons for the Douglas D-558-2 research airplane. The tests were conducted to investigate the possibilities of a single-degree-of-freedom flutter commonly known as aileron "buzz" or aileron compressibility flutter.

On one flight test (no external damping on one wing and 0.083 ft-lb per radian per sec external damping on the other wing) no vibrations occurred up to the maximum Mach number of the test (M = 1.03). On another test (no external damping on one wing and 0.016 ft-lb per radian per sec external damping on the other wing) an aileron oscillation of 50 cycles per second existed between a Mach number of 0.58 and a Mach number approximately of 0.73. Wind-tunnel tests later showed that this was flexure-aileron flutter. An aileron oscillation of 85 to 108 cycles per second occurred above a Mach number of 0.96 and is believed to be aileron buzz.

Since the first mode bending frequency of the $\frac{1}{4}$-scale wing panels corrected to full scale is 13 percent below the full-scale-airplane bending frequency and the torsional frequency is 22 percent above the full-scale-airplane torsional frequency, the possibility of the occurrence of flexure-aileron flutter on the actual airplane is believed to exist.

INTRODUCTION

At the request of the Bureau of Aeronautics, Navy Department, the NACA conducted flight and wind-tunnel tests on $\frac{1}{4}$-scale wing panels of

[redacted]

the Douglas D-558-2 research airplane. The original purpose of the tests was to investigate the possibility of the existence of single-degree-of-freedom aileron flutter known more commonly as aileron "buzz" or aileron compressibility flutter. The $\frac{1}{4}$-scale wing panels of the outer 55 percent of semispan, complete with ailerons, were built by Douglas Aircraft Company, Inc. Two of these wing panels were mounted on each of two low-acceleration rocket-propelled test vehicles and provided the stabilizing surface about the pitch axis. Provision was made for installing a damping mechanism in each of the wing panels so that a predetermined amount of damping could be added to the aileron system. By using different amounts of damping, it was believed possible to determine how much was necessary to minimize or eliminate aileron buzz.

Because a violent vibration developed at low speed, the program was expanded to include wind-tunnel tests in the Langley 7- by 10-foot high-speed tunnel for an additional investigation below a Mach number of 0.9. The wing panel was mounted from the tunnel ceiling and the damping was varied as in free-flight tests.

SYMBOLS

h	geometric altitude, feet
V_c	speed of sound at altitude h, feet per second
V	velocity of test vehicle, feet per second
M	Mach number
ρ	air density, slugs per cubic foot
t	time after take-off of test vehicle, seconds
δ_a	aileron deflection, degrees
f	frequency at which damper piston is oscillated, cycles per second
A	amplitude of oscillation of damper piston, feet

C' damping coefficient, pounds per foot per second

C damping coefficient of damper mechanism about aileron hinge line, foot-pounds per radian per second

APPARATUS AND METHODS

Test Vehicle

The test vehicle was of the FR-1 type configuration (reference 1) with minor modifications to facilitate a satisfactory mounting of wing aileron panels. Figure 1 shows the physical dimensions of the test vehicle and its physical characteristics are listed in table I. Two views of the test vehicle on its launching rack are shown in figure 2. The wing-aileron panels were mounted as the stabilizing surfaces in pitch.

Wing-Aileron Panels

The original test wing panels sent by Douglas Aircraft Company were of solid cast magnesium. It was necessary to reduce the weight of these panels to move the center of gravity of the test vehicle forward and to increase the maximum speed. These wing panels were $\frac{1}{4}$-scale models of the outer 55 percent semispan, station 67 to station 150 of the full-scale wing. A sketch of one modified test model showing comparison with complete wing plan form is shown in figure 3 and some of its physical characteristics, static and dynamic, are listed in table II, together with some of the vibration parameters of the airplane wing. Figure 4 shows a three-dimensional cutaway of part of wing and aileron.

Design conditions for the aileron were established to give results corresponding to airplane operation at an altitude of 20,000 feet while testing the model at sea level and while flying the model through the same Mach number range in which the airplane is designed to operate. The mass distribution of the model is like that of the full-scale aileron in a chordwise dimension and, whereas no attempt was made to distribute the mass spanwise as in the full-scale aileron, it is of necessity quite similar.

Aileron Damping

The hydraulic dampers used in these tests were designed, constructed, and calibrated by the Douglas Aircraft Company. The orifice used in these

dampers was made in a removable plug so that the amount of damping desired could be chosen by inserting a plug with an orifice size corresponding to the desired value of damping. The dampers were calibrated on a test setup which could oscillate the damper piston at various frequencies and amplitudes. The force required to move the piston was measured by a strain-gage link and was presented on the Y-axis of a cathode-ray oscilloscope. The displacement was measured with a slide-wire pickup and presented on the X-axis of the oscilloscope. The resulting pattern on the oscilloscope screen was an approximate ellipse whose area was a measure of the work absorbed per cycle by the damper. Knowing the work absorbed per cycle and the frequency and amplitude at which the damper piston is driven, it was possible to calculate the damping coefficient from the formula $C' = \frac{\text{Work}}{2\pi^2 f A^2}$ Knowing the distance from the aileron hinge to the pivot to be 0.75 inch, the coefficient C' may be converted to the coefficient C. The internal construction of the damper is shown in figure 5 and its installation in the wing panel is shown in figure 6(a). In tests where no external damping was desired, a dummy damper was used which was merely a piece of steel rod rigidly attached to the aileron rod and free to move in a brass guide. Installation of the dummy damper is shown in figure 6(b).

Instrumentation

Aileron deflections were measured by control-position indicators mounted at the opposite end of the damper piston rod from the aileron. This is shown in figure 6. A three-channel telemeter in the nose section of each test vehicle transmitted signals of both aileron deflections and of longitudinal acceleration from which the velocity of the test vehicle was obtained. As a check on velocity, a continuous-wave Doppler radar was used. The launching facilities and cameras were identical to those described in reference 1. Atmospheric conditions prevailing at the time of flight and the trajectory of test vehicle were obtained by a radiosonde and tracking radar, respectively.

Wind Tunnel

The values of damping and method of recording aileron deflections were similar to those used in the free-flight tests. Figure 7 shows the wing mounted from the tunnel ceiling and shows the fore and aft wing-tip restraints that were used on some of the tests largely to eliminate wing twist and flexure. Strain gages mounted inside the wing structure were used to give an indication of the magnitude of the wing

oscillations. Care was taken in both free-flight and tunnel tests to mount the wings rigidly so that there could be no movement between the wing and its mounting.

RESULTS

Free-Flight Tests

The aileron of the left wing in the initial free-flight test was undamped except for the friction of the dummy damper, and the damper of the right aileron was equipped with the proper orifice plug to give $C = 0.083$ foot-pounds per radian per second. It can be seen from the upper set of curves in figure 8 that no vibration of the aileron occurred up to a Mach number of 1.03, which was the maximum attained in the test.

Since no aileron buzz developed, the test was repeated to confirm the results of the first test. The second test was conducted with a dummy damper attached to the right aileron and a damper adjusted to give 0.016 foot-pounds per radian per second on the left aileron. During the flight a vibration of 50 cycles per second developed on the right aileron at a Mach number of 0.58 and continued to a Mach number of 0.73. Between a Mach number of 0.73 and a Mach number of 0.9 a 67-cycle-per-second vibration gradually became superimposed upon this 50-cycle-per-second vibration, becoming a pure 67-cycle-per-second vibration at a Mach number of 0.9. This gradually increased in frequency to 70 cycles per second at a Mach number of 0.96. Between 9.1 seconds ($M = 0.99$) and 9.4 seconds ($M = 1.00$) the right aileron trace shows a violent oscillation that ends abruptly at 9.4 seconds as shown in the lower curves of figure 8. Inspection of the deflection signal on the telemeter record after 9.4 seconds indicates the possibility of either a structural failure of the aileron or a failure of the control-position indicator. The left aileron developed a vibration at $M = 0.59$ having the same frequency variation as the right aileron with increase in speed. After the floating angle changed ($M = 0.96$), the frequency changed to 85 cycles per second and gradually increased to 108 cycles per second at a Mach number of 1.01 (Reynolds number is 10,500,000). During the decelerated flight the frequency again gradually decreased to 85 cycles per second until the floating angle again changed at a Mach number of 0.96. The vibration momentarily ceased as the floating angle changed and started again at 70 cycles per second, gradually decreasing to 67 cycles per second. At a Mach number of approximately 0.73, this vibration momentarily ceased and a 50-cycle-per-second vibration started and continued for the remainder of the flight.

Altitude of the missile as obtained from the tracking radar is shown in figure 9. Air density and velocity of sound as obtained from the radiosonde are also shown in figure 9.

Wind-Tunnel Tests

The results of the wind-tunnel investigation are listed in table III. Large wing-tip deflections were observed along with the aileron vibration that occurred in the initial test ($M = 0.58$ to $M = 0.70$) and indicated the possibility of flexure-aileron flutter. The aileron hinge was cracked and screws holding the wing skin to the wing framework were found to be loose when the tunnel was shut down. This might account for the low-vibration frequency at a Mach number of 0.70.

The second run was made with the wing tip restrained, thereby increasing the rigidity of the wing so as to isolate possible aileron buzz. Strain gages were mounted inside the wing so that wing vibration would be noted. Tests were run with a damper adjusted for 0.083 foot-pounds per radian per second and also with a dummy damper. No vibrations occurred in either test up to a Mach number of 0.85 which was the maximum that could be attained.

With the restraints removed and the damper adjusted to give 0.016 foot-pounds per radian per second, a vibration developed similar to the first run but at a higher Mach number and a smaller amplitude. The aileron hinge again failed and the aileron was destroyed.

DISCUSSION

Three Types of Aileron Vibration

The aileron vibrations which occurred during the second flight test seem to have three phases:

(1) The 50-cycle-per-second vibration ($M = 0.58$ to $M = 0.73$) which only changed by having another frequency superimposed upon it or by damping out and restarting at a different frequency. It might be noted that this is approximately the first bending frequency of the wing.

(2) The vibration ($M = 0.73$ to $M = 0.96$) which increased in frequency from 67 cycles per second to 70 cycles per second. This oscillation momentarily ceased on the right aileron during accelerated flight but the vibration of the left aileron continued on through the trim angle change with a momentary decrease in amplitude.

(3) The high-frequency vibration ($M = 0.96$ to $M = 1.01$) which varied from about 85 cycles per second at $M = 0.96$ to 108 cycles per second at the highest Mach number attained in the test ($M = 1.01$).

These three phases appear in both accelerated and decelerated flight and their transition points occur at approximately the same Mach number. Only the first of these vibration phases was able to be checked in wind-tunnel tests and it is apparently flexure-aileron flutter.

All that can be said about the second phase which occurred at approximately $M = 0.73$ to $M = 0.96$ is that wind-tunnel tests with the wing tip restrained failed to show any aileron flutter up to the highest Mach number of the test ($M = 0.85$) so it probably is not single-degree-of-freedom aileron flutter.

The change in floating angle of the ailerons occurs at approximately the same Mach number as the sharp drop in control effectiveness and increase in drag coefficient experienced by tests of this same wing. (See reference 2.) Calculations show that the critical Mach number of the wing is about 0.94. All these factors indicate that the Mach number was greater than the critical Mach number throughout the range of the high-frequency vibration ($M = 0.96$ to highest attained $M = 1.01$). Because the third type of vibration is different from the other two and because it occurs at a Mach number above the critical Mach number of the wing, it is possible that this vibration is aileron buzz. Although the aileron is statically mass-balanced at zero deflection, it is not mass-balanced when deflected because it is hinged to the lower surface of the wing. (See fig. 4.) This might be a contributing factor toward development of the vibration obtained.

Vibration Amplitudes

As may be seen in figure 8, the amplitude of the aileron vibrations during the low-speed phase ($M = 0.58$ to $M = 0.73$) and the high-speed phase ($M = 0.96$ to $M = 1.01$) increased with increasing Mach number. The amplitude of the second-phase vibration during decelerating flight was approximately constant, but during accelerated flight this phase was of such short duration and so near the floating-angle change that no amplitude variation could be determined.

Figure 8 also gives an indication of the effect of damping on the amplitude of the vibration. During the low-speed phase, which wind-tunnel tests showed to be flexure aileron flutter, the vibration amplitude of the undamped aileron was about twice that of the damped aileron. The data that were obtained from the undamped aileron during the high-speed phase ($M = 0.96$ to $M = 1.01$) indicate that the amplitude was approximately twice that of the damped aileron.

Critical-Vibration Characteristics

The discussion so far has mentioned nothing about the initial flight during which no aileron vibrations occurred. The difference in aileron-vibration characteristics encountered for similar models indicates that the susceptibility to flutter of free control surfaces (damped or undamped) is critical; that is, small variations in static and dynamic conditions may cause large variations in the free-flight characteristics.

It is important to note that the first mode bending frequency of the $\frac{1}{4}$-scale panel corrected to full scale is 13 percent below the full-scale-airplane bending frequency. The torsional frequency is 22 percent above the full-scale-airplane torsional frequency. Since these parameters are of the same order of magnitude and, if the model may be considered representative of the full-scale wing, the possibility of the occurrence of flexure-aileron flutter on the full-scale airplane does exist. It is therefore recommended that a further investigation of these flutter phenomena - flexure-aileron flutter and aileron "buzz" - be conducted on the D-558-2 wing.

CONCLUSIONS AND RECOMMENDATIONS

A flight and wind-tunnel investigation was made to determine the aileron-vibration characteristics of $\frac{1}{4}$-scale wing panels of the Douglas D-558-2 research airplane. In the first flight test no aileron vibrations occurred up to the maximum Mach number attained in the test ($M = 1.03$). In the second flight test three types of vibration occurred: (1) A vibration of 50 cycles per second at a Mach number of 0.58 to a Mach number of approximately 0.73 which later wind-tunnel tests showed to be flexure-aileron flutter, (2) a vibration of 67 to 70 cycles per second at a Mach number of 0.73 to a Mach number of 0.96 which could not be duplicated in the wind tunnel at a Mach number of 0.85 with wing-tip restraints in place, and (3) a high-frequency vibration at 85 to 108 cycles per second occurring above a Mach number of 0.96 which could possibly be aileron "buzz."

In view of these test results and the comparable torsion and bending frequencies between the $\frac{1}{4}$-scale models and the full-scale wings, it is

recommended that further investigation of these flutter phenomena (flexure-aileron flutter and aileron buzz) be conducted to eliminate the possible critical-flutter condition of the full-scale wings.

Langley Aeronautical Laboratory
National Advisory Committee for Aeronautics
Langley Field, Va.

REFERENCES

1. Angle, Ellwyn E.: Initial Flight Test of the NACA FR-1-A, a Low-Acceleration Rocket-Propelled Vehicle for Transonic Flutter Research. NACA RM No. L7J08, 1948.

2. Sandahl, Carl A.: Free-Flight Investigation at Transonic and Supersonic Speeds of a Wing-Aileron Configuration Simulating the D-558-2 Airplane. NACA RM No. L8E28, 1948.

TABLE I

TEST VEHICLE PARAMETERS

Weight, lb	270
Fuselage:	
Length, in.	95
Maximum diameter, in.	10.625
Vertical fins:	
Exposed area (total), sq ft	2.22
Span, ft	2.55
Airfoil section normal to leading edge	NACA 65-009
Sweepback angle, deg	60
Taper ratio	1:1

NACA

TABLE II

WING AND AILERON PARAMETERS

$\frac{1}{4}$-scale wing:	
Weight (each), lb	17.5
Moment of inertia of wing "with damper installed" about 35-percent-chord line, slug-ft^2	0.124
Center of gravity, percent of chord back from leading edge	44.9
Center of gravity, percent of span out from root chord	51
Exposed area (each), sq ft	2.66
Tip airfoil section (normal to 30 percent chord)	NACA 63-012
Torsional stiffness (couple applied normal to leading edge and 24 in. along leading edge from root chord, ft-lb per deg	6.7×10^6
Bending frequency, first mode (found by vibrating wing), cps	51
Torsional frequency, first mode (found by vibrating wing), cps	225
Aileron:	
Center-of-gravity position at 0° aileron deflection	At hinge line
Moment of inertia about hinge line, lb-in.^{2}	0.554
Spring constant of flexure hinge, in.-lb per radian	10.4
Natural frequency of aileron flexural hinge system (found by vibrating wing), cps	14
Weight of aileron, lb	1.47
Full-scale wing:	
Bending frequency, first mode, cps	15
Torsional frequency, first mode, cps	41.5
Scaled from model:	
Bending frequency, first mode, cps	13
Torsional frequency, first mode, cps	56

TABLE III

AILERON-VIBRATION CHARACTERISTICS AS DETERMINED BY WIND-TUNNEL TEST

[redacted]

Run	Amount damping, C (ft-lb/radian/sec)	Wing restrained at tip	Aileron vibration (cps)	Aileron amplitude (deg) (a)	M	Maximum M attained	Remarks
1	0	No	53.5 45.0	d, 1 u, 0 d, 5.6 u, 1.8	0.58 .70 (approx.)	0.70	Hinge cracked and screws holding wing skin to framework found to be loose after shutdown. Both aileron and wing vibrated. Wing-tip deflection of approximately $\frac{3}{8}$ inch.
2	.083	Yes	None	None		.85	Restraints restricted maximum M to 0.85.
3	0	Yes	None	None		.85	Same as run 2.
4	.016	No	53	d, 2.6 u, 1.7	.70	.70	Both wing and aileron vibrated. Wing-tip deflection somewhat smaller than run 1. Weakened aileron hinge is believed to be cause of aileron destruction.

[a] Letter "d" signifies down position, letter "u" signifies up position

[redacted]

NACA

[redacted]

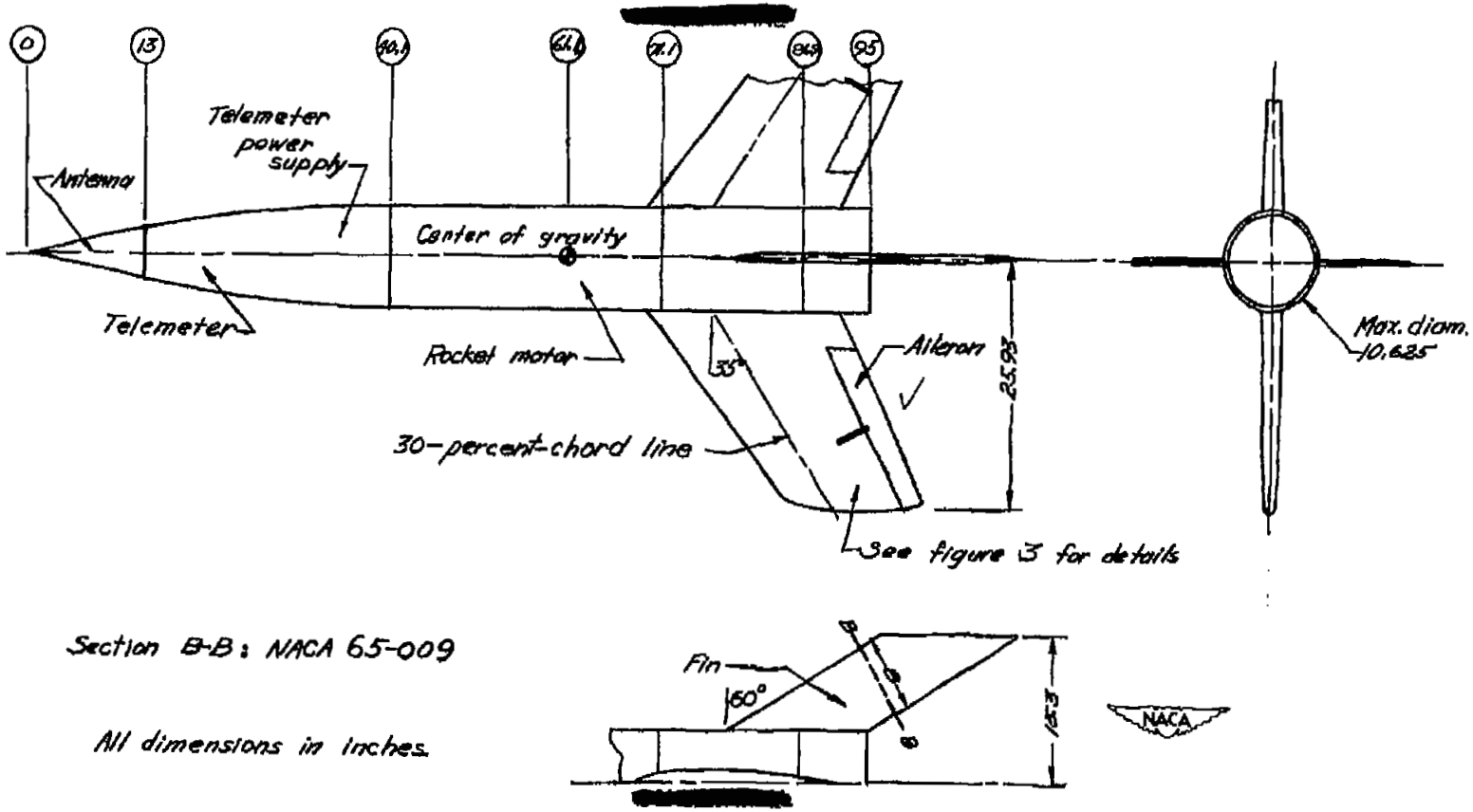

[redacted]

Figure 1.- Flutter test vehicle and test wing panels.

[redacted]

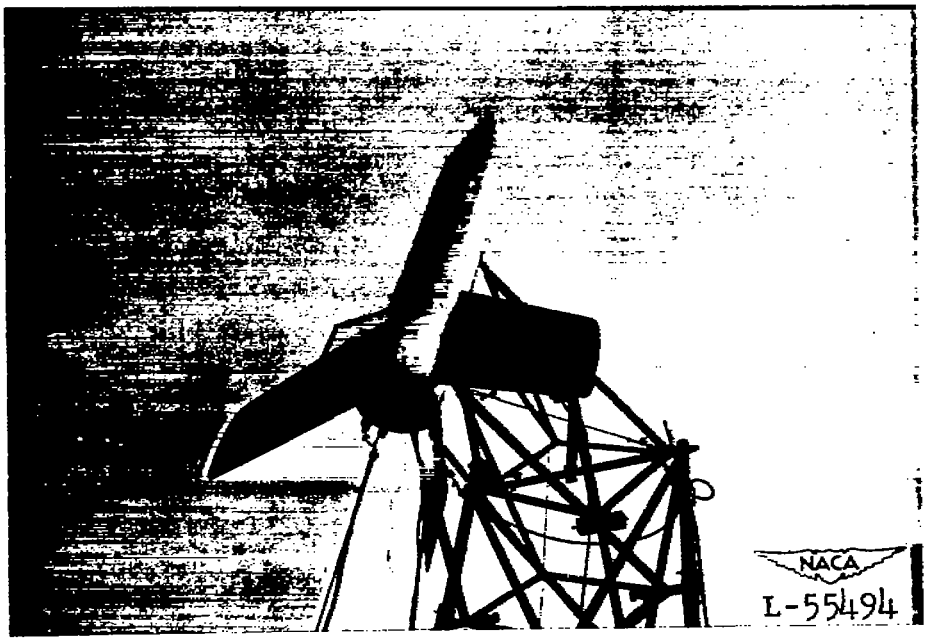

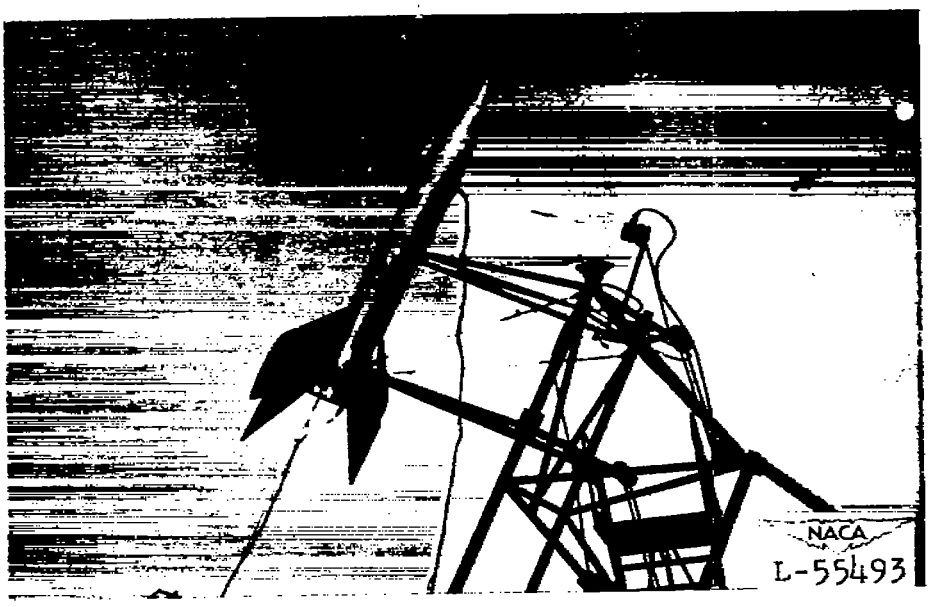

Figure 2.- Two views of test vehicle on launching rack.

[redacted]

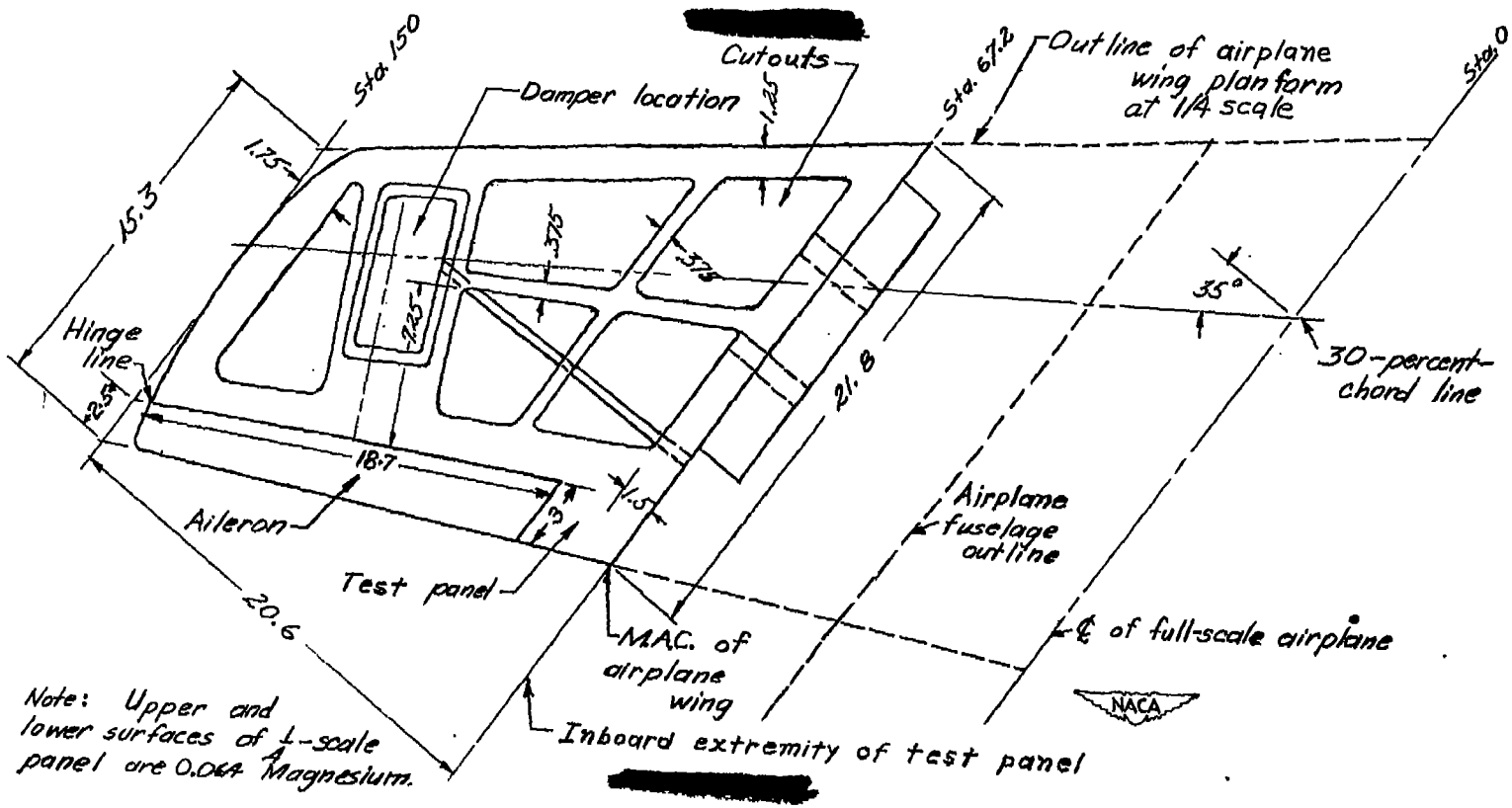

Figure 3.- Comparison of $\frac{1}{4}$-scale test panel with complete wing plan form D-558-2; all dimensions in inches.

[redacted]

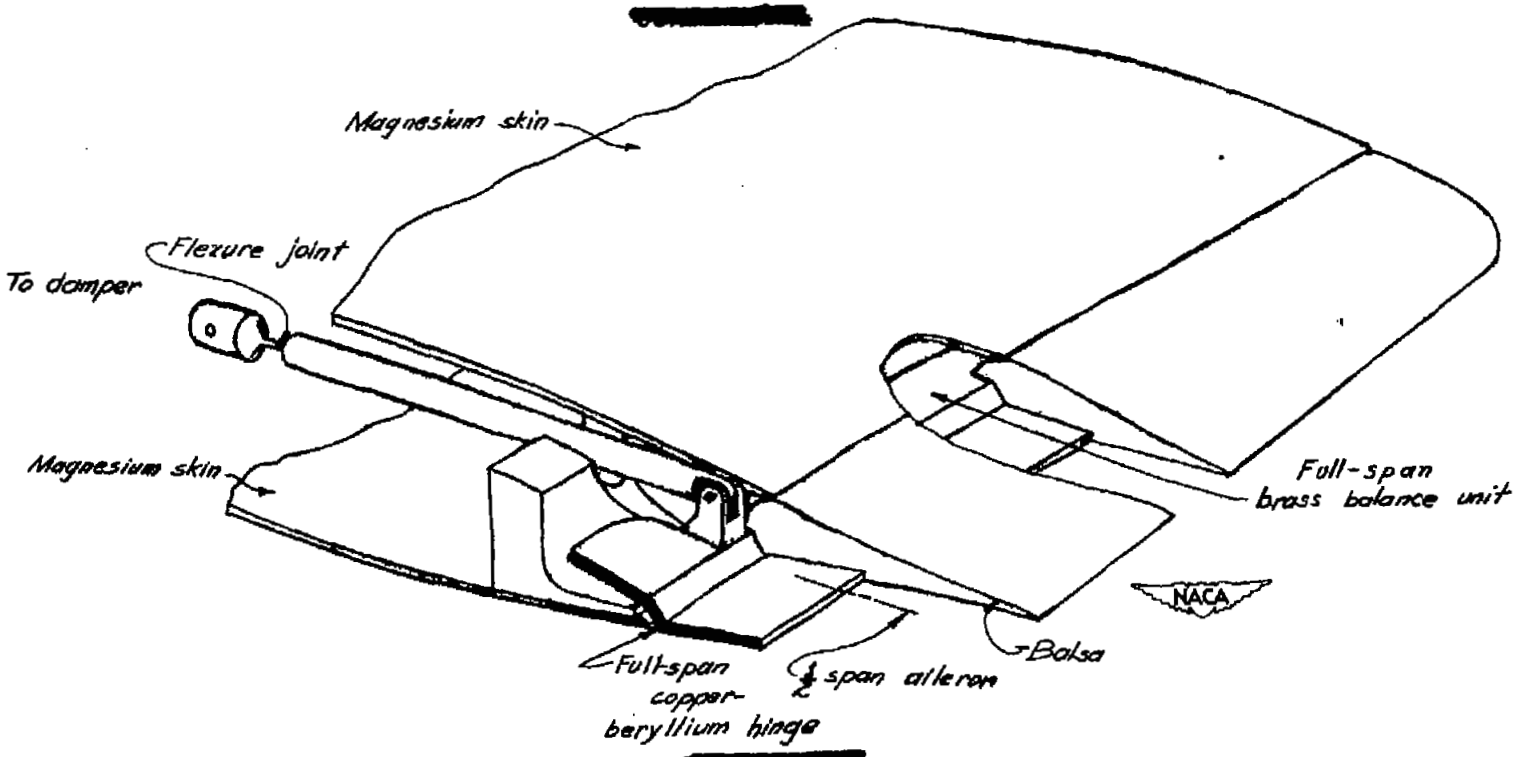

[redacted]

Figure 4.- Aileron details, $\frac{1}{4}$-scale aileron "buzz" models of Douglas D-558-2 research airplane.

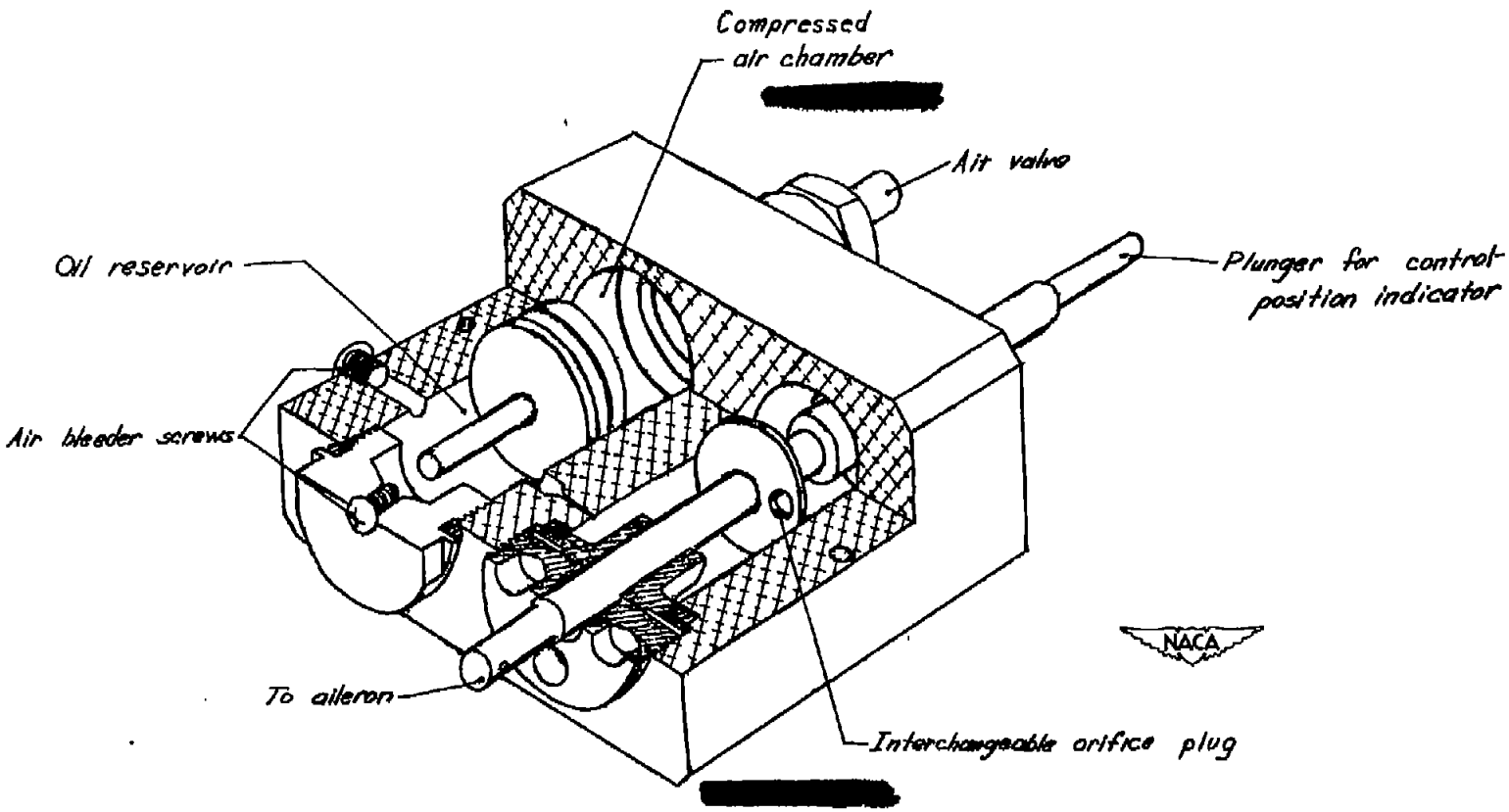

Figure 5.- Hydraulic damper, $\frac{1}{4}$-scale aileron "buzz" models of Douglas D-558-2 research airplane.

[redacted]

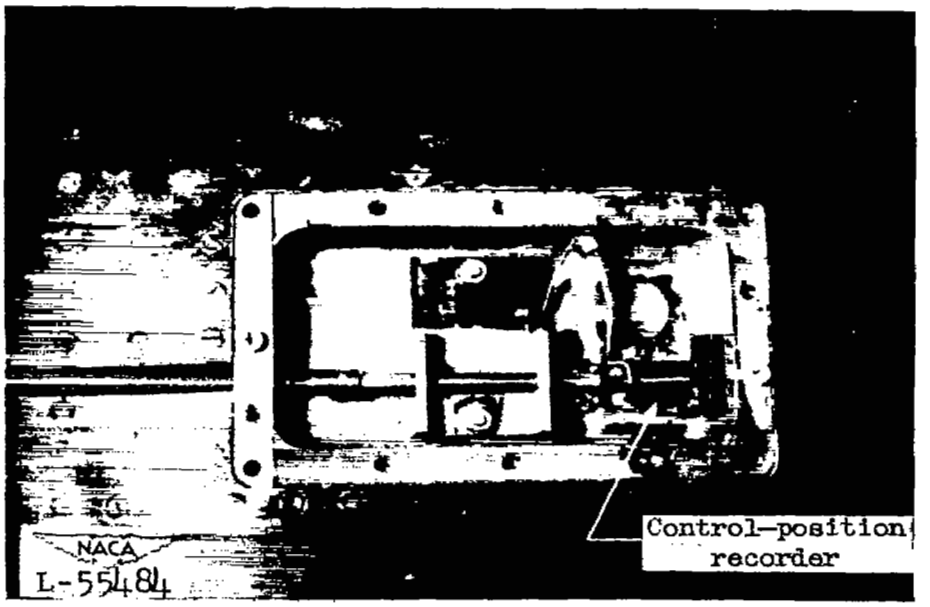

(a) Hydraulic damper with control-position recorder.

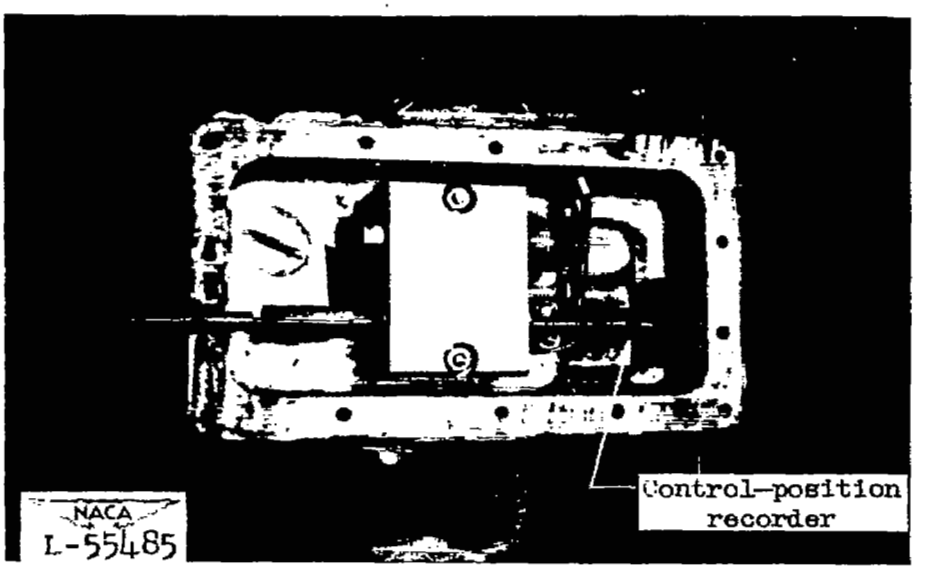

(b) Dummy damper with control-position recorder.

Figure 6.- Dampers and pickoffs assembled in wing panel.

[redacted]

[redacted]

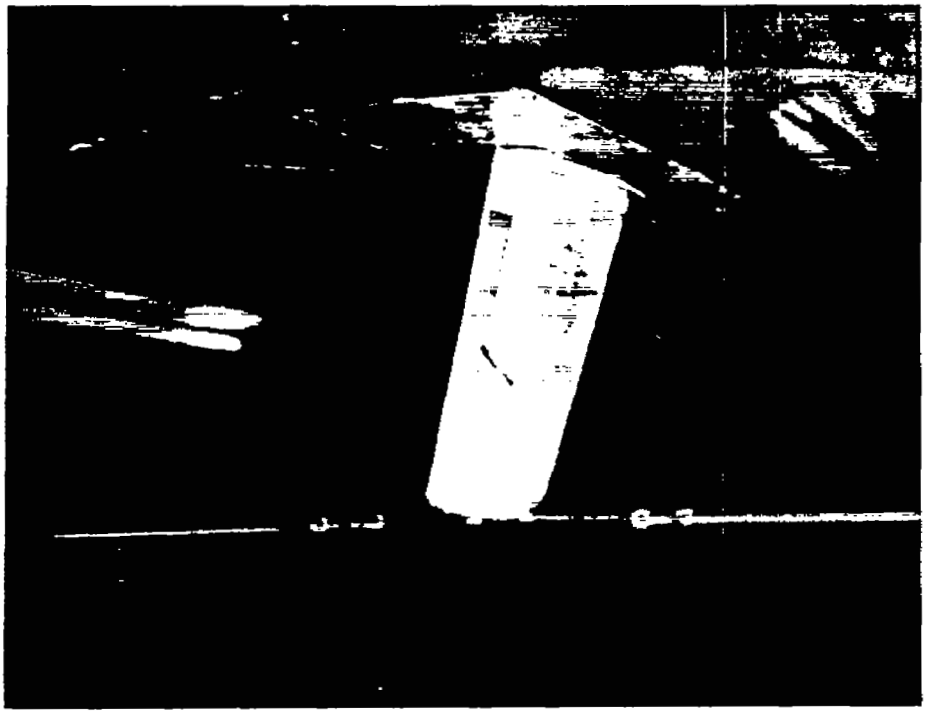

NACA
L-55975

Figure 7.- Test wing-aileron panel with tip restraints mounted on tunnel wall.

[redacted]

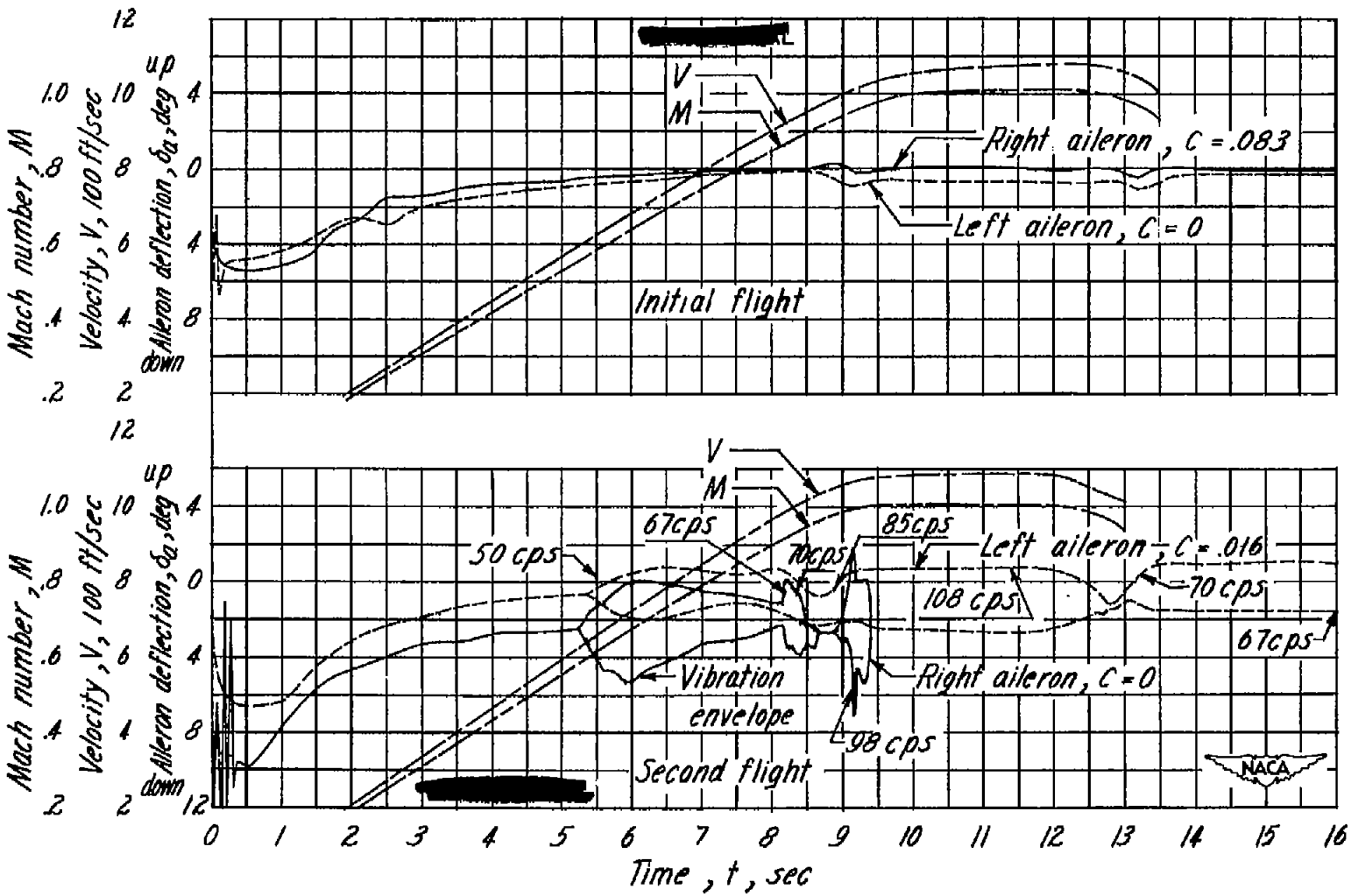

Figure 8.- Results of flight test of $\frac{1}{4}$-scale aileron "buzz" models.

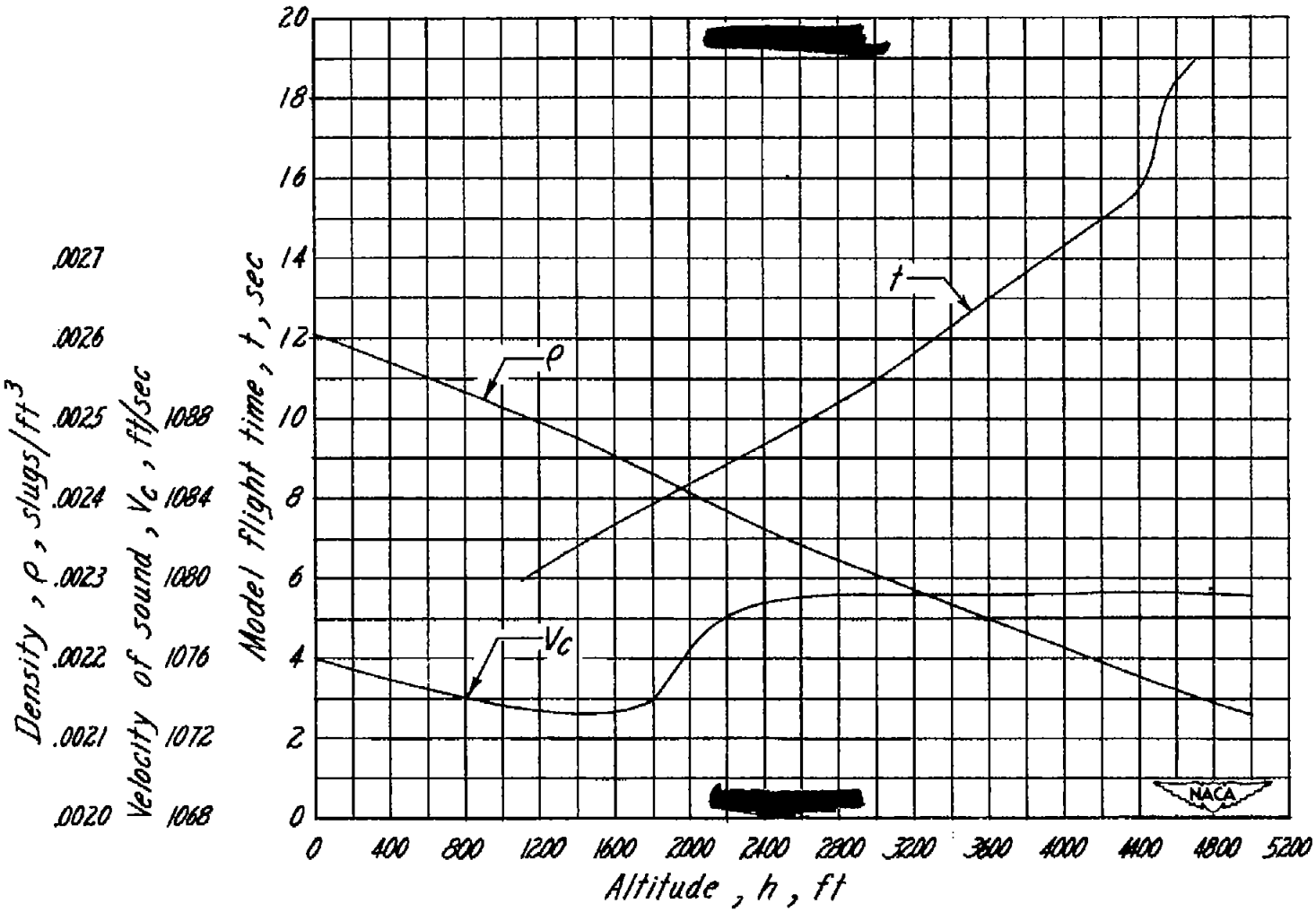

(a) Initial flight.

Figure 9.- Flight conditions of test vehicle.

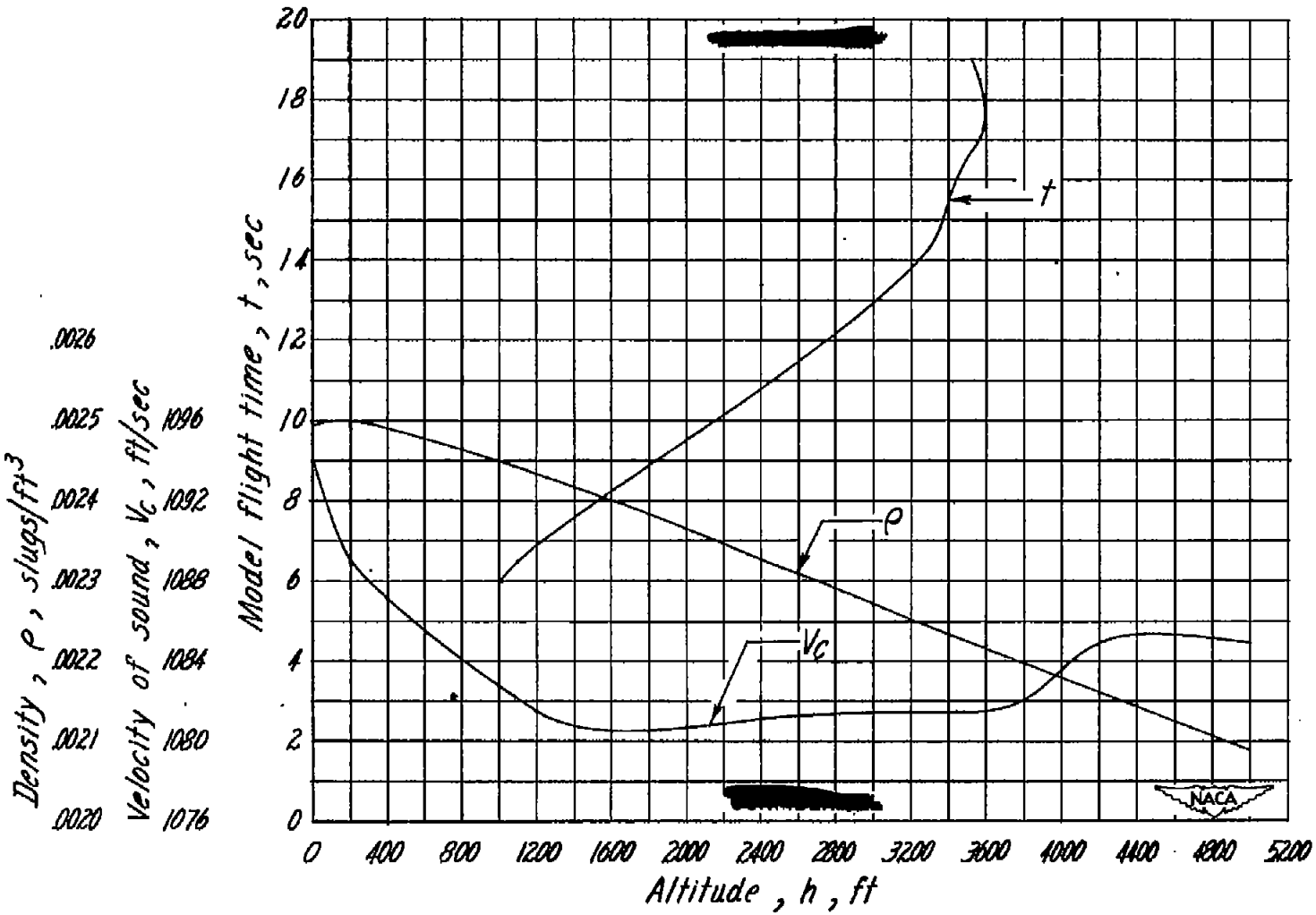

(b) Second flight.

Figure 9.- Concluded.

NASA Technical Library
3 1176 01436 6778