Copy 5
RM E57F13b

NACA RM E57F13b

c. 2

NACA

RESEARCH MEMORANDUM

ANALYTICAL STUDY OF THE EQUILIBRIUM THICKNESS OF BORIC OXIDE DEPOSITS ON JET-ENGINE SURFACES

By Paul C. Setze

Lewis Flight Propulsion Laboratory
Cleveland, Ohio

CLASSIFICATION CHANGED

To UNCLASSIFIED

By authority of Naca CA 3 Date 10-31-58
1-7-59 NA

OCT 10 1957
LANGLEY AERONAUTICAL LABORATORY
LANGLEY FIELD, VIRGINIA

CLASSIFIED DOCUMENT

This material contains information affecting the National Defense of the United States within the meaning of the espionage laws, Title 18, U.S.C., Secs. 793 and 794, the transmission or revelation of which in any manner to an unauthorized person is prohibited by law.

NATIONAL ADVISORY COMMITTEE
FOR AERONAUTICS

WASHINGTON
October 8, 1957

UNCLASSIFIED

UNCLASSIFIED

NASA Technical Library
3 1176 01435 8585

 [redacted]

4571

CP-1

NATIONAL ADVISORY COMMITTEE FOR AERONAUTICS

RESEARCH MEMORANDUM

ANALYTICAL STUDY OF THE EQUILIBRIUM THICKNESS OF BORIC OXIDE DEPOSITS ON JET-ENGINE SURFACES

By Paul C. Setze

SUMMARY

An analytical study is presented of a laminar liquid film flowing along a surface immersed in a gas stream. The results of the analysis indicate that: (1) The equilibrium film thickness is directly proportional to the square root of the liquid deposition rate; (2) the equilibrium film thickness is directly proportional to the square root of the liquid viscosity; and (3) the equilibrium film thickness is inversely proportional to the square root of the shear stress at the surface.

The results are intended to show the parameters affecting the thickness of this film, but are not intended to be quantitative. A calculation made from the analysis does appear reasonable, however, when compared with the scant experimental data available. The analysis indicates that the equilibrium film thickness will be less in regions of high liquid-film temperature (reduced viscosity) and high free-stream momentum.

INTRODUCTION

The presence of boric oxide on the surfaces of jet engines utilizing boron-containing fuels will probably necessitate a new design of some engine components in order to obtain the most efficient operation. If the thickness of the deposit on any surface could be calculated as a function of engine conditions, this new design could be made with greater confidence. Until recently, the two problem areas with regard to deposits were the primary combustor and the turbine of the turbojet engine. However, recent advances in the design of a primary combustor for pentaborane fuel (ref. 1) indicate that boric oxide deposits in the combustor can probably be greatly reduced. Therefore, the turbine is now the major problem area.

In the turbine, the flow-area relations are quite critical, and any change in these relations due to deposits on the blades should be

[redacted]

UNCLASSIFIED

considered during the turbine design. Either the flow-area relations or the operating conditions (temperature, pressure, and pressure ratio) of the turbine would have to be changed to obtain maximum efficiency with deposits.

The purpose of the analysis reported herein is to determine the parameters affecting the equilibrium thickness of boric oxide on jet-engine surfaces, so that the engine designer will have an indication of the optimum design conditions. This report does not intend to give a comprehensive analysis of the equilibrium thickness of the boric oxide film. The results of the analysis are semiquantitative and should be used only over the range of conditions included in the assumptions listed in the ANALYSIS section. Before the analysis, several experimental tests were conducted in which motion pictures were made of a boric oxide film on a flat plate. These tests were to determine the characteristics of such a film. The results of these tests and the methods by which they aided in the analytical model are also presented.

4571

The analysis is restricted to a laminar liquid film and assumes that the boric oxide in the free stream is in the form of liquid particles of near molecular-size.

EXPERIMENTAL APPARATUS AND PROCEDURE

The apparatus used in the photographic studies of boric oxide film on a flat plate was very similar to that reported in reference 2. Trimethyl borate - methyl alcohol azeotrope was burned in a single tubular combustor supplied with air from the central laboratory air supply. At the combustor exit a transition section reduced the flow area to a rectangular opening 3.7 by 4 inches wide. The jet emerging from this opening was allowed to enter the room and pass over a flat plate positioned on the centerline of the jet with the leading edge about 1/2 inch from the transition section exit. About 8 inches of free space was allowed for photographs. The free jet was then captured by a duct leading to water sprays and then to the building altitude exhaust system, which was maintained at as low a pressure as possible in order to ensure the exhausting of most of the combustion products. A diagram and a photograph of the apparatus are shown in figures 1 and 2, respectively. The fuel system was the same as that reported in reference 2.

The instrumentation used in the tests is summarized in the following table:

4571

CP-1 back

Combustion airflow	ASME orifice
Fuel flow	Rotating-vane flowmeter
Combustor-inlet temperature	Average of 3 thermocouples
Combustor-outlet temperature	Average of 6 thermocouples
Flat-plate surface temperatures	14 Thermocouples, 1 in. apart on plate centerline
Flat-plate static pressure	Assumed ambient

A preliminary test was conducted to determine the persistence of the potential core of the free jet. In this test, a movable total-pressure probe was used to survey the core of the jet. The test was made at ambient temperature with a jet velocity of about 800 feet per second. The results of this test showed that the total pressure, 1/2 inch above the surface of the flat plate, was constant for the entire plate length.

EXPERIMENTAL OBSERVATIONS AND RESULTS

Experimental testing covered the following conditions:

Core temperature, °F . . . . . 1000 to 1600
Core velocity, ft/sec . . . . . 600 to 1200
Static pressure (ambient), atm 1

The motion pictures showed that there was no observable change in the thickness or characteristics of the plate deposits after 20 to 30 minutes of operation. In other words, the equilibrium condition had been very closely approached.

The motion pictures and inspection of the flat plate after shutdown showed that the liquid film was smooth (referred to as the laminar region) over the first 2 to 5 inches (depending on the test conditions), and then a transition to a wavy film (turbulent region) occurred. These regions are illustrated in the following sketch:

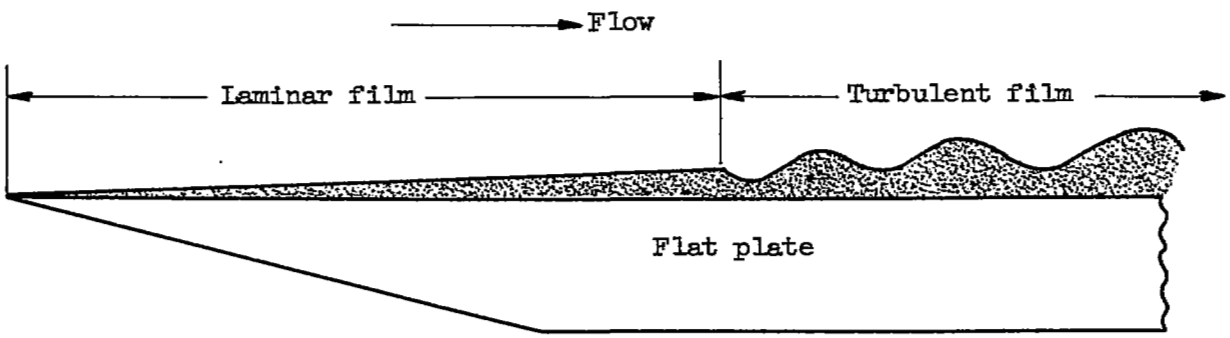

It was also observed that when a large liquid particle (torn from the combustor liner) impinged on the leading edge of the flat plate, the film behind the point of impingement was always turbulent.

Measurements of the laminar film thickness just upstream of the transition point showed that it varied from 0.010 to 0.030 inch depending on the conditions. The film thickness varied in a manner similar to that predicted by the following analysis; that is, the film was thinner at high free-stream velocities and temperatures.

Several determinations were made of the turbulent-film velocity about 6 inches from the leading edge of the flat plate. These values were taken from the motion pictures and varied from about 0.0004 (gas temperature, 1450° F; gas velocity, 650 ft/sec; plate temperature, 1370° F) to 0.008 foot per second (gas temperature, 1480° F; gas velocity, 1150 ft/sec; plate temperature, 1380° F). A photograph of the flat plate after a typical run is shown in figure 3.

4571

ANALYSIS

A completely theoretical analysis of the turbulent region of the liquid film would be quite difficult if not impossible. However, an empirical analysis can be made after experimental data become available. Consequently, only the laminar liquid film will be treated analytically in this report.

From observations of liquid film on the flat plate and deposits on the stator blades of a two-stage turbine engine operated on pentaborane (ref. 3), it was believed that an analysis of the laminar film would be helpful to the designer because in a number of cases it appears that a laminar film would be present. An analysis of the laminar film follows.

It should be again emphasized that the analysis is only intended to show the relation among the variables affecting the equilibrium thickness and is not intended to be a quantitative calculation method from which the equilibrium thickness can be obtained.

The model assumed has a laminar liquid film on a surface immersed in a flowing gas stream. Liquid particles suspended in the gas stream deposit onto the surface at a known rate. The shear stress caused by the gas stream acting on the liquid film induces a film motion in the direction of the gas flow. A point is reached where the volume flow rate past any station in the film is equal to the total volume of liquid being deposited upstream of that station. This is the condition of equilibrium. Once equilibrium has been reached, provided that shear stress and the deposition rate are both held constant, the film thickness will also remain constant.

For simplification of the analysis, the following assumptions are made:

(1) The rate at which the liquid deposits on the surface is known.

(2) The film is laminar (free from waves).

(3) The film moves at a negligible velocity when compared with the velocity of the gas stream. Therefore, the shear stress acting on the film will be the same as the shear stress acting on the surface if no film was present (verified by the experimental observations).

(4) The shear stress across the film is constant (in the y-direction).

(5) The film is at an equilibrium condition.

Two additional conditions will also be considered assuming that (1) the liquid film is isothermal in the y-direction, and (2) a known temperature gradient exists across the liquid film in the y-direction.

Isothermal Condition

For the isothermal condition it is assumed that the film is isothermal in the direction normal to the surface.

Consider an element of the liquid film (abcd of the following sketch) x-distance from the leading edge of a surface.

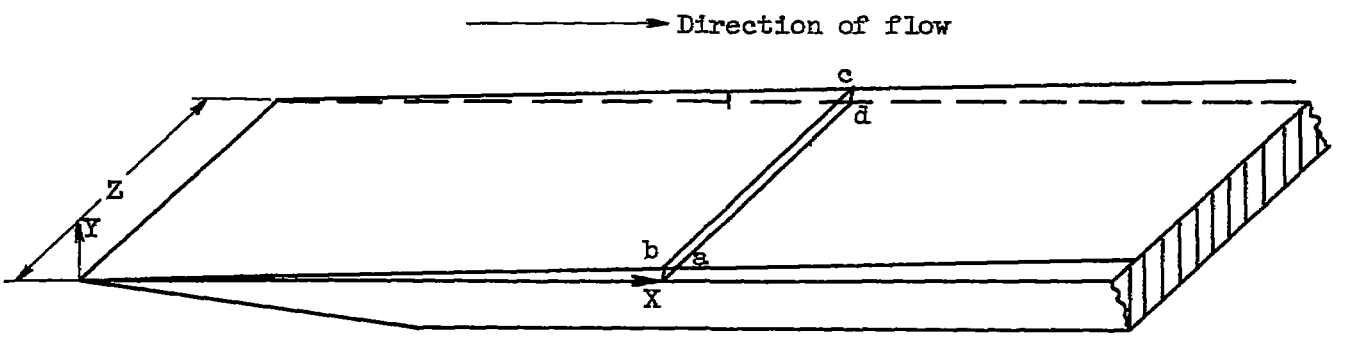

The total volume flow rate of liquid through the element V_x can be expressed by

$$V_x = \int_0^x \int_0^z V dx\, dz \tag{1}$$

where V is the local deposition rate. Using the equation of flow continuity for the film results in

$$\frac{w_x}{\rho_l} = V_x = \bar{u}_{f,x} t_{eq,x} z \tag{2}$$

From the definition of shear stress in a fluid (ref. 4),

$$\tau = \frac{\mu}{g}\left(\frac{du}{dy}\right) \tag{3a}$$

or from the use of assumption 4 and assuming no temperature gradient (τ and μ_l are constant),

$$\left(\frac{du}{dy}\right)_f = \frac{g\tau_f}{\mu_l} = \text{constant} \tag{3b}$$

Therefore, the velocity gradient through the film is linear and varies from u_i at the liquid-gas interface to 0 at the surface so that

$$\bar{u}_f = \frac{1}{2} u_i \tag{4}$$

When equation (4) is substituted into equation (2),

$$V_x = \frac{1}{2} u_{i,x} t_{eq,x} z \tag{5}$$

The following expression results from setting up equation (3a) for integration:

$$\tau_f \int_0^{t_{eq}} dy = \frac{\mu_l}{g} \int_0^{u_i} du \tag{6}$$

which gives

$$\tau_f t_{eq} = \frac{\mu_f u_i}{g} \tag{7}$$

Equations (5) and (7) can be solved simultaneously for either the equilibrium thickness t_{eq} or the interfacial velocity u_i to give the following results:

$$t_{eq} = \sqrt{\frac{2V_x\mu_l}{\tau_f zg}} \tag{8}$$

$$u_i = \sqrt{\frac{2V_x\tau_f g}{\mu_l z}} \tag{9}$$

Nonisothermal Condition

Where a large temperature gradient exists across the liquid film (in the y-direction), the same general analysis shown previously can be used (with one exception). This exception is discussed as follows:

Equation (3a) can be written

$$u_y = \tau_f g \int_0^y \frac{dy}{\mu} \tag{10}$$

In order to solve equation (10), the viscosity μ must be expressed as a function of temperature, and the temperature inserted as a function of y $[T = f(y),\ \mu = f(T)]$. (A curve of viscosity against temperature for boric oxide (from ref. 5) is presented in fig. 4.) The result of this substitution is an expression for the local velocity in the liquid film u_y as a function of y. With this information, the average film velocity $\overline{u}_f$ as a function of t_{eq} may be found from

$$\overline{u}_f = \frac{\int_0^{t_{eq}} u_y dy}{\int_0^{t_{eq}} dy} \tag{11}$$

Equations (10) and (11) together with the necessary temperature-viscosity relations can be used simultaneously with equation (2) to obtain a value of the equilibrium thickness.

Application of Equations (8) and (9) to a Flat Plate with a Turbulent Gas Boundary Layer

The equation for the shear stress on a flat plate with a turbulent gas boundary layer is given in reference 4 as

$$\tau_s = \frac{7}{72} \frac{\rho_0}{g} U_0^2 \frac{\partial\delta}{\partial x} \tag{12}$$

4571

where

$$\frac{\partial\delta}{\partial x} = \frac{0.296}{Re_0^{1/5}} \tag{13}$$

and therefore,

$$\tau_s = 0.0288 \frac{\rho_0 U_0^2}{Re_0^{1/5} g} \tag{14}$$

where

$$Re_0 = \frac{x U_0 \rho_0}{\mu_0} \tag{15}$$

From assumption (3),

$$\tau_f = \tau_s \tag{16}$$

Substitution of equations (14), (15), and (16) into equations (8) and (9) results in the following expressions for t_{eq} and u_i:

$$t_{eq} = \sqrt{\frac{69.5\ V_x \mu_l x^{0.2}}{z \rho_0^{0.8} U_0^{1.8} \mu_0^{0.2}}} \tag{17}$$

and

$$u_i = \sqrt{\frac{0.0576\ V_x \rho_0^{0.8} U_0^{1.8} \mu_0^{0.2}}{\mu_l x^{0.2} z}} \tag{18}$$

Now

$$V_x = \bar{r}_x x z \tag{19}$$

4571.

where $\bar{r}_x$ (which is a function of temperature, pressure, and fuel-air ratio only, see ref. 2) is the average deposition rate (ft/sec) over the distance x. Substitution of equation (19) into equations (17) and (18) gives

$$t_{eq} = \sqrt{\frac{69.5\ \bar{r}_x \mu_l x^{1.2}}{\rho_0^{0.8} U_0^{1.8} \mu_0^{0.2}}} \tag{20}$$

and

$$u_i = \sqrt{\frac{0.0576\ \bar{r}_x \rho_0^{0.8} U_0^{1.8} \mu_0^{0.2} x_0^{0.8}}{\mu_l}} \tag{21}$$

CP-2

which express the equilibrium thickness of boric oxide and the interfacial velocity in terms of known variables (r_x can be obtained by the method of ref. 2).

Equations (20) and (21) were solved for the condition of an isothermal liquid film over a temperature range from 1000° to 2000° F and for the following fixed conditions:

x, ft	0.08
U_0, ft/sec	1000
ρ_0, ft/cu ft	0.024
$\bar{r}_x$, ft/sec	5×10^{-4}

The results of the calculation are presented in figures 5 and 6. The solution indicates that qualitative agreement was obtained (well within one order of magnitude) between the analysis and the experimental observations discussed previously. No quantitative experimental data are available to compare with the theoretical values of figures 5 and 6. The experimental values of film thickness obtained previously are merely average values for the combined laminar and wavy portions of the film. As previously noted, however, the qualitative effects of the operating variables on liquid-film thickness appear to be predicted by the theoretical equation.

Point of Transition from a Laminar to a Turbulent Liquid Film

Reference 6 shows that for a liquid film, flowing along the walls of a tube, transition from a laminar to a turbulent motion was observed when the value of y^+ was between 12 and 21, where

$$y^+ = \left(\frac{\sqrt{\tau_f g/\rho_l}}{\mu_l/\rho_l}\right) y \tag{22}$$

Equation (22) was put in terms of variables consistent with the liquid-film analysis reported herein and was used to indicate where flow transition might be expected to occur.

Substitution of equation (7) into equation (22) gives

$$y^+ = \left(\frac{\sqrt{\mu_l u_i/t_{eq}\rho_l}}{\mu_l/\rho_l}\right) y \tag{23}$$

4571

Substitution of t_{eq} for y and inclusion of all the terms on the right side of equation (23) under the radical yield

$$y^+ = \sqrt{\frac{\mu_l u_i \rho_l^2 t_{eq}^2}{\rho_l \mu_l^2 t_{eq}}} \tag{24a}$$

which reduces to

$$y^+ = \sqrt{\frac{t_{eq} u_i \rho_l}{\mu_l}} \tag{24b}$$

A film Reynolds number was defined as

$$Re_f = \frac{t_{eq} u_i \rho_l}{\mu_l} \tag{25}$$

Therefore,

$$Re_f = (y^+)^2 \tag{26}$$

The following can then be concluded: for laminar film, $Re_f < 144$; for the transition region, $144 < Re_f < 441$; and for turbulent film, $Re_f > 441$.

For the conditions at which the sample calculation was made (in the previous section), the film Reynolds number varies from 1.685×10^{-5} (at 1000° F) to 233×10^{-5} (at 2000° F). It was observed in the motion pictures that transition occurred at a Reynolds number several orders of magnitude less than the transition Reynolds number reported in reference 6.

4571

CP-2 back

Discussion and Application of Results

The purpose of the analysis reported herein was only to determine the relation between the variables influencing the equilibrium thickness. It was not the purpose of the analysis to derive an exact quantitative expression relating equilibrium thickness with any set of variables. On this basis, two general conclusions can be drawn from equation (20):

(1) The equilibrium thickness is approximately proportional to the square root of the liquid viscosity.

(2) The equilibrium thickness is approximately inversely proportional to the square root of the free-stream momentum $(\rho_0 U_0^2)$.

From these conclusions, the two following design practices can be derived. On surfaces where excessive build-up of boric oxide can cause losses in engine performance, it is desirable to (1) keep the surface temperature as high as possible (thereby lowering the viscosity); and (2) keep the momentum of the free stream $(\rho_0 U_0^2)$ as high as possible.

It should be pointed out, however, that, although a quantitative analysis was not the intended purpose of this report, the results of the sample calculation appear quite reasonable.

The exact point at which transition from a laminar to a turbulent liquid film occurs is unknown. On the basis of the results reported in reference 6, it appears that a laminar film would be present over a large portion of the conditions of interest.

The experimental observation reported herein indicates that transition occurs much sooner than reported in reference 6, although a laminar film would still be present over a range of conditions of interest. The reason for this disagreement is unknown, but may be because of surface roughness or impingement of large droplets on the leading edge of the plate.

The experimental observations also point out that a laminar film would not be present downstream of a point where large liquid droplets were allowed to impinge.

CONCLUDING REMARKS

From the qualitative experimental observations and the analysis reported herein the following conclusions may be drawn:

1. If a laminar liquid film is present, its thickness will be less in regions of high free-stream momentum ($\rho_0 U_0^2$ where ρ_0 is free-stream density and U_0^2 is free-stream velocity).

2. If a laminar liquid film is present, its thickness will be less in regions of high liquid-film temperature.

3. The liquid film will be turbulent downstream of points where large liquid droplets are allowed to impinge.

4571

Lewis Flight Propulsion Laboratory
National Advisory Committee for Aeronautics
Cleveland, Ohio, June 14, 1957

4571

APPENDIX - SYMBOLS

g	acceleration due to gravity, 32.17 ft/sec^2
$\bar{r}_x$	average deposition rate over distance x, ft/sec
Re_f	Reynolds number based on liquid film
Re_0	Reynolds number based on free stream
T	temperature, $^{\circ}F$
t_{eq}	equilibrium film thickness, ft
U_0	free-stream velocity, ft/sec
u	local velocity, ft/sec
$\bar{u}_f$	average film velocity, ft/sec
u_i	interfacial velocity, ft/sec
u_y	local film velocity y distance from surface, ft/sec
V	local oxide deposition rate, cu ft/sec
V_x	integrated film volumetric flow over distance x, cu ft/sec
w_x	integrated film weight flow over distance x, lb/sec
x	distance parallel to axis of flow, ft
y	distance normal to axis of flow, ft
y^+	wall distance parameter defined in equation (22)
z	distance across width of surface, ft
δ	boundary-layer thickness, ft
μ	viscosity, lb/(ft)(sec)
μ_l	liquid viscosity, lb/(ft)(sec)

μ_0 free-stream viscosity, lb/(ft)(sec)

ρ_l liquid density, lb/cu ft

ρ_0 free-stream density, lb/cu ft

τ shear stress, lb/sq ft

τ_f shear stress in film, lb/sq ft

τ_s shear stress acting on surface, lb/sq ft

Subscripts:

f film

x distance from leading edge

REFERENCES

1. Kaufman, Warner B., Lezberg, Erwin A., and Breitwieser, Roland: Preliminary Evaluation of Pentaborane in a 1/4-Sector of an Experimental Annular Combustor. NACA RM E56B13, 1956.

2. Setze, Paul C.: A Theoretical and Experimental Study of Boric Oxide Deposition on a Surface Immersed in an Exhaust Gas Stream from a Jet-Engine Combustor, Including a Method of Calculating Deposition Rates on Surfaces. NACA RM E57F18, 1957.

3. Sivo, Joseph N.: Altitude Performance of a Turbojet Engine Using Pentaborane Fuel. NACA RM E57C20, 1957.

4. Streeter, Victor L.: Fluid Mechanics. McGraw-Hill Book Co., Inc., 1951.

5. Setze, Paul C.: A Review of the Physical and Thermodynamic Properties of Boric Oxide. NACA RM E57B14, 1957.

6. Abramson, A. E.: Investigation of Annular Liquid Flow with Concurrent Air Flow in Horizontal Tubes. Jour. Appl. Mech., Sept., 1952.

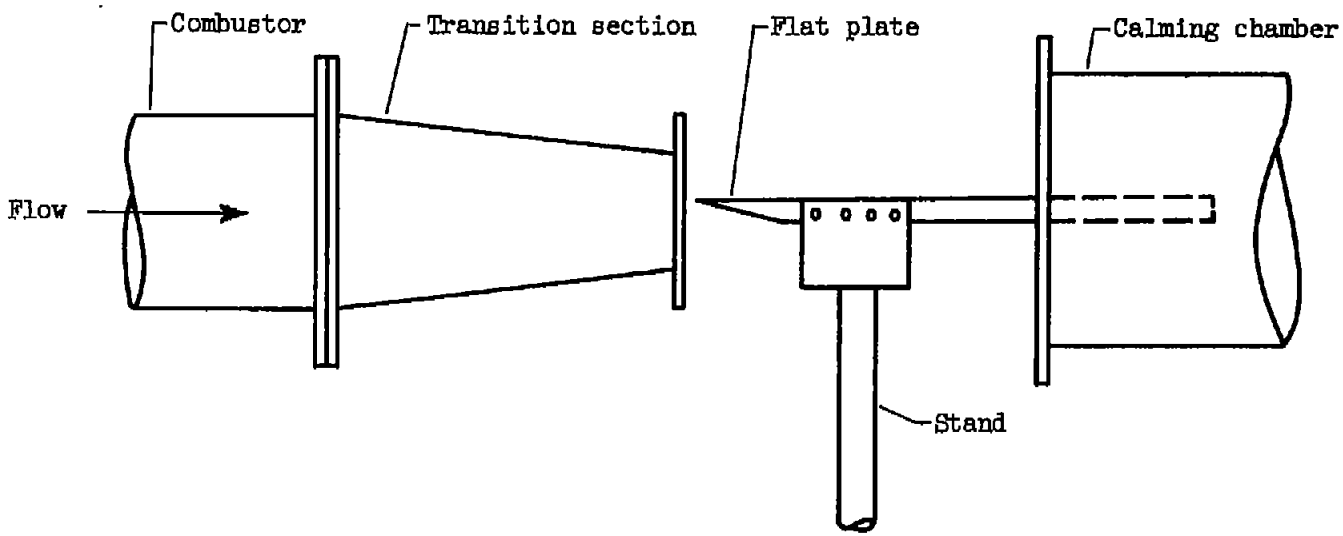

Figure 1. - Schematic diagram of experimental apparatus.

4571

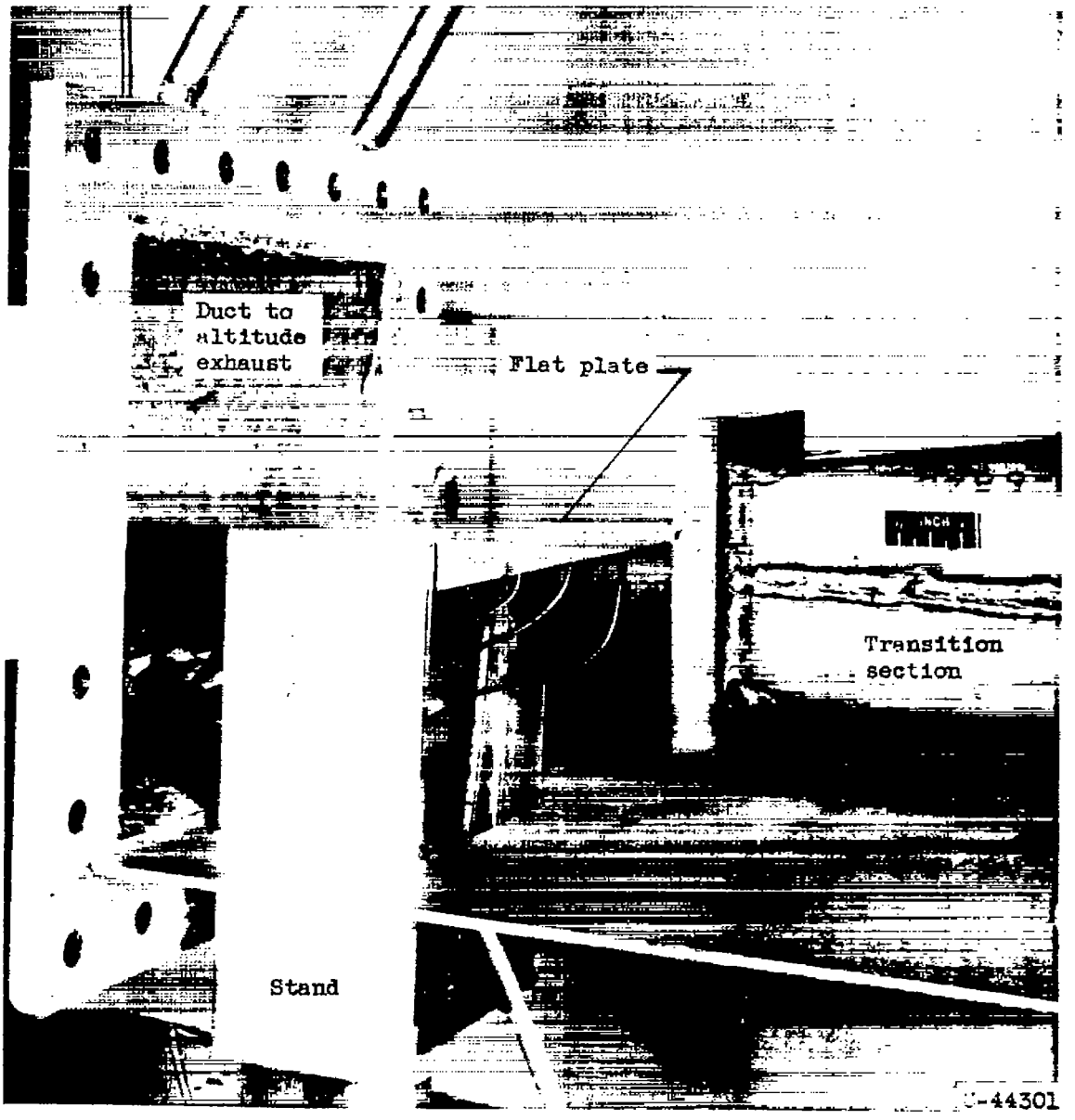

Figure 2. - Experimental apparatus.

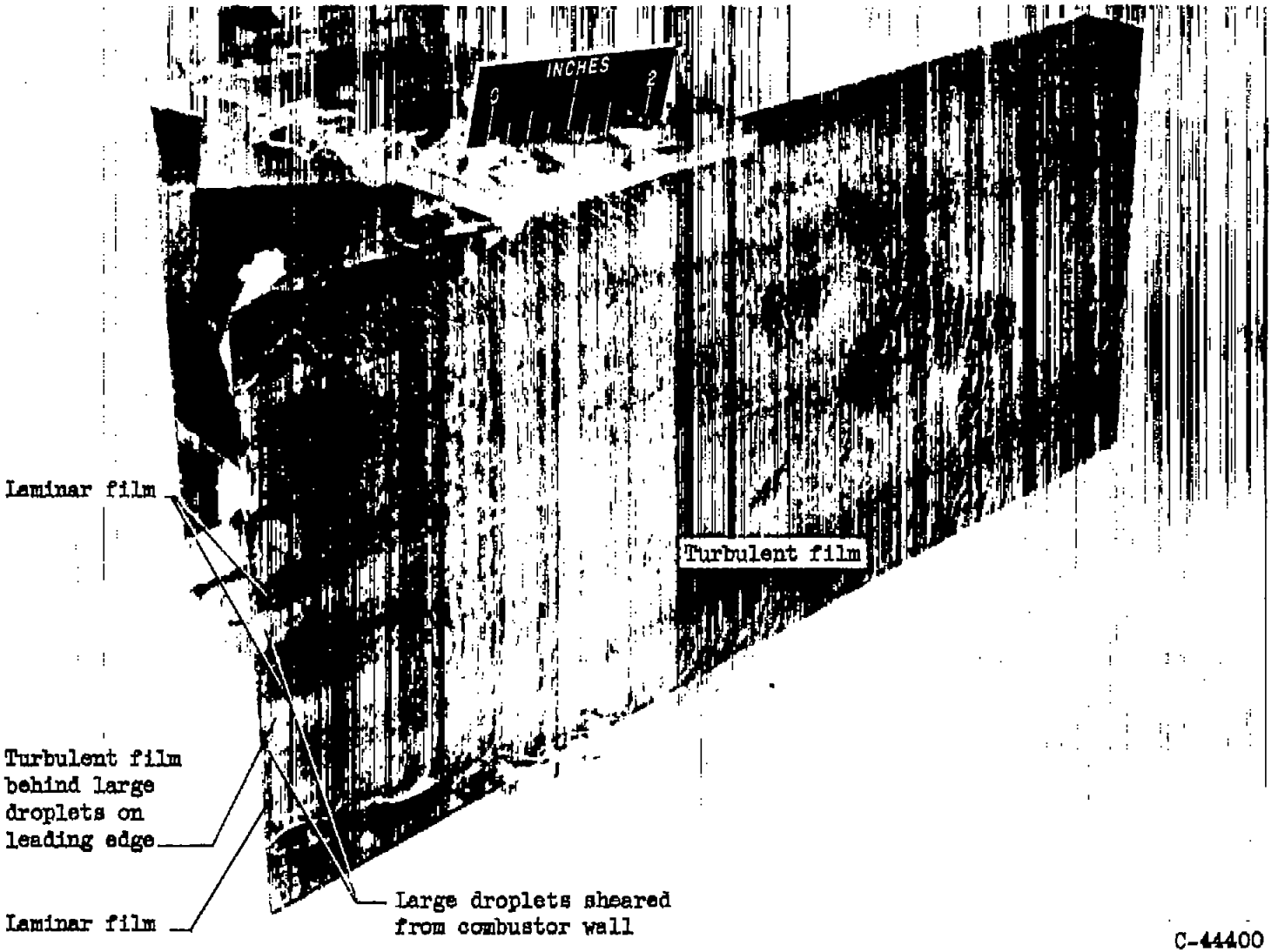

Figure 3. - Flat plate after typical run (run, 64 min).

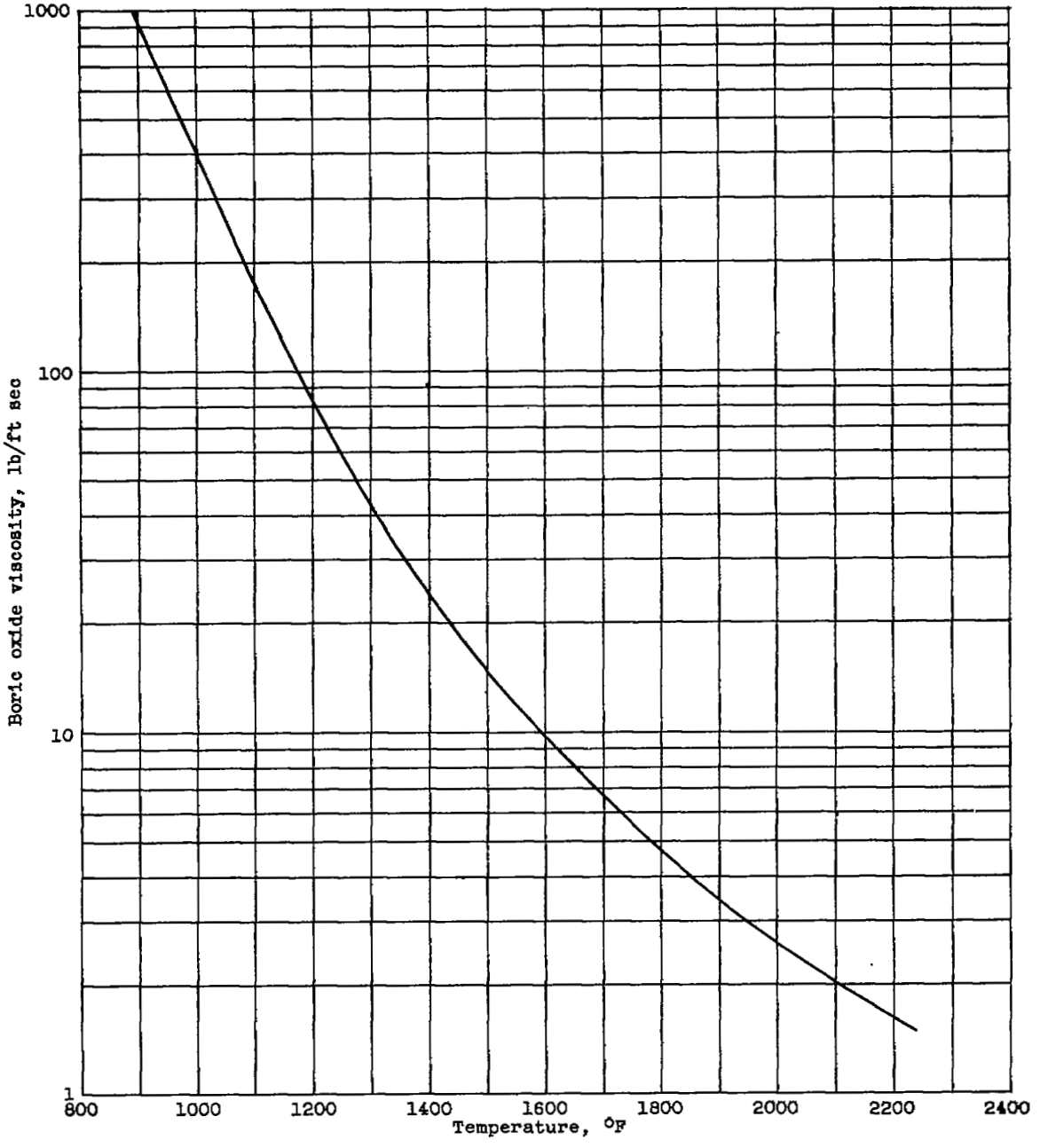

Figure 4. - Viscosity of boric oxide liquid.

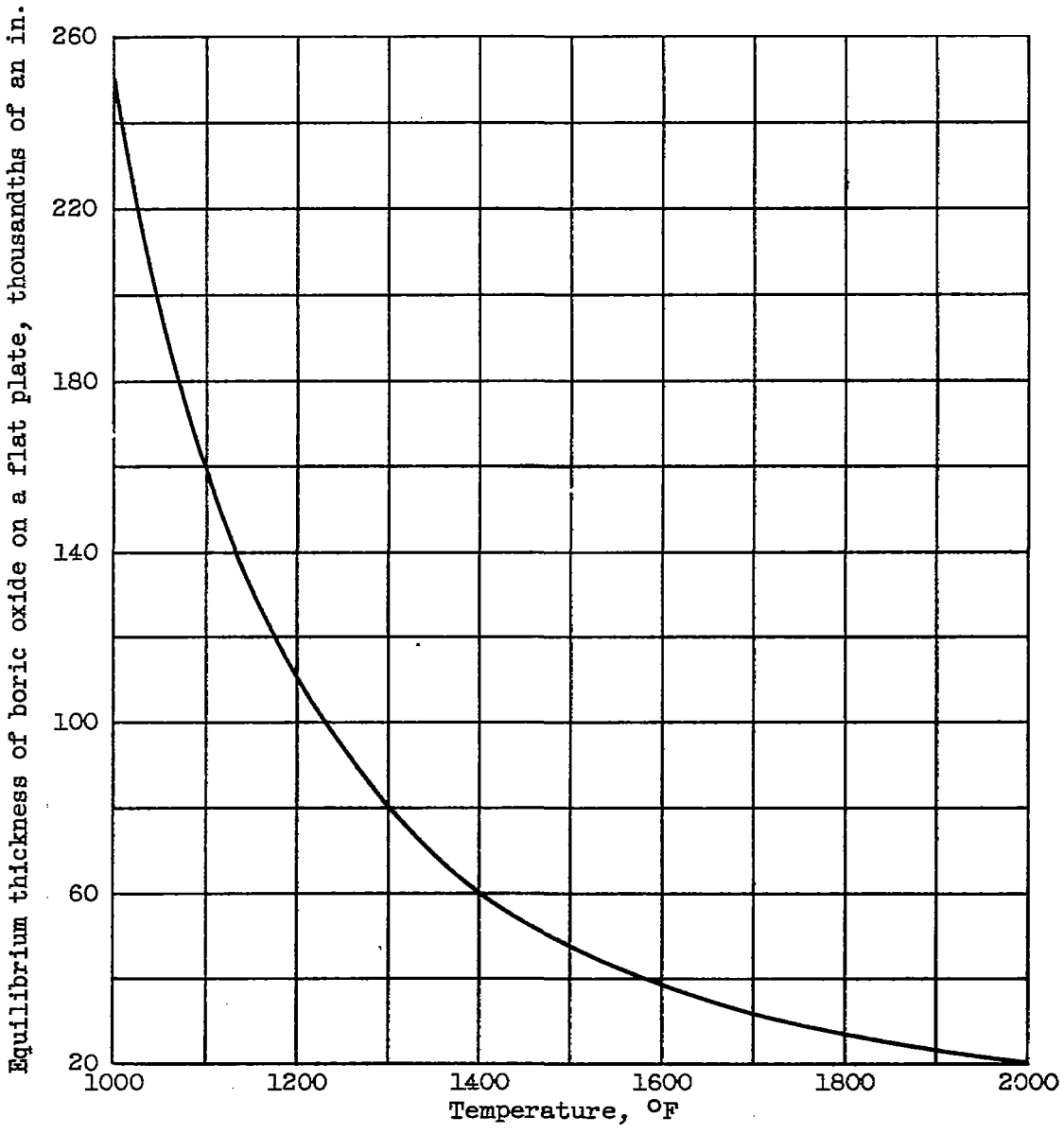

Figure 5. - Equilibrium thickness against temperature. Distance from leading edge, 0.08 foot; free-stream velocity, 1000 feet per second; free-stream density, 0.024 pound per cubic foot; average deposition rate, 5×10^{-4} foot per second.

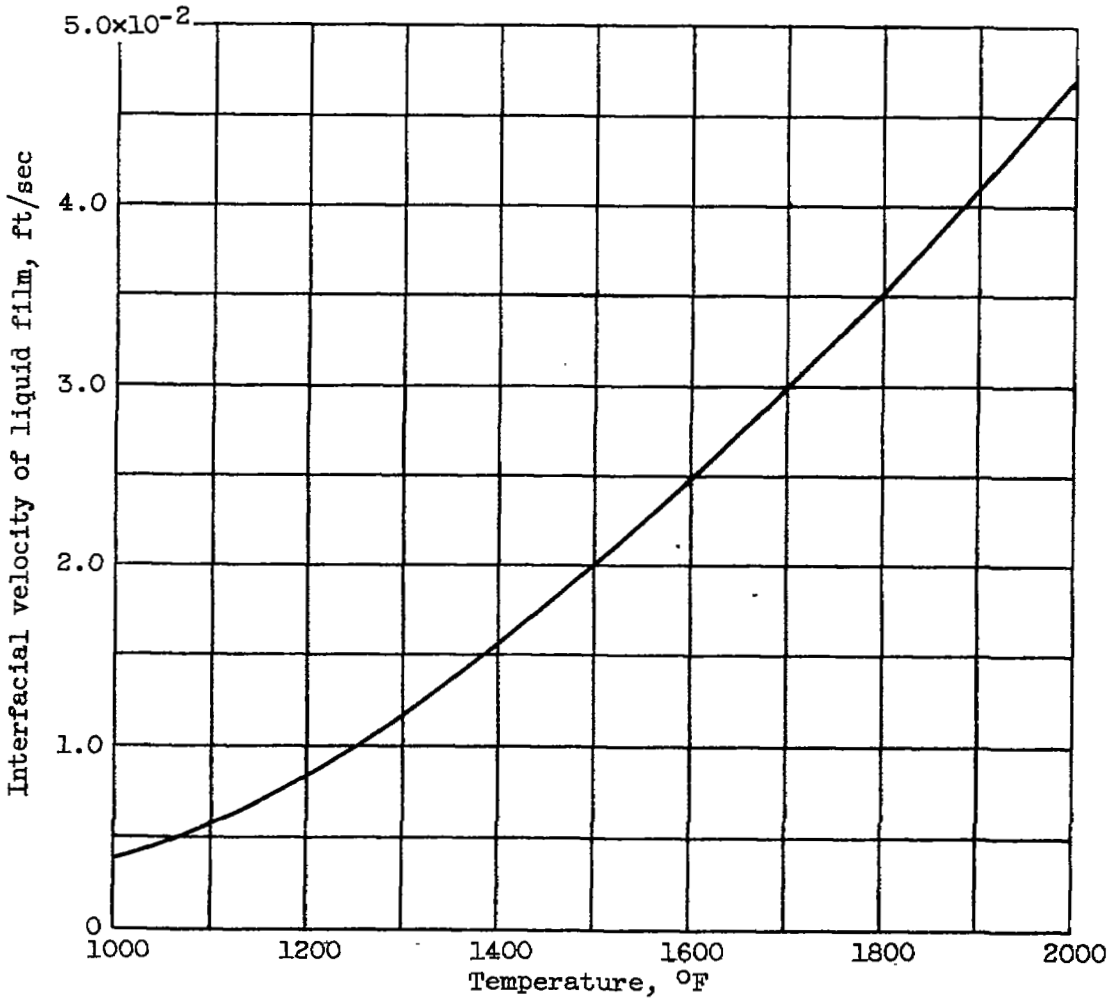

Figure 6. - Interfacial velocity against temperature.

NACA - Langley Field, Va.

[redacted]

NASA Technical Library
3 1176 01435 8585

[redacted]