SECRET

Copy 25
RM SL57J16a

3 1176 00100 0182

Copy 1

NACA

RESEARCH MEMORANDUM

for the

U. S. Air Force

9/10/59 file

WIND-TUNNEL INVESTIGATION OF MUTUAL INTERFERENCE LOADS ON A SUPERSONIC BOMBER CONFIGURATION AND STORE DURING SEPARATION AT MACH NUMBERS OF 1.57, 1.77, AND 2.01

COORD. NO. AF-AM-91

By Owen G. Morris and Kenneth L. Turner

Langley Aeronautical Laboratory
Langley Field, Va.

TPAG effective Sept. 1, 1959

CLASSIFICATION CHANGED
UNCLASSIFIED

NASA CCN 43 12-29-65
Km 11-24-66

N.N. 11,325

NATIONAL ADVISORY COMMITTEE FOR AERONAUTICS

WASHINGTON

October 25, 1957

SECRET

~~SECRET~~ UNCLASSIFIED

NATIONAL ADVISORY COMMITTEE FOR AERONAUTICS

RESEARCH MEMORANDUM

for the

U. S. Air Force

WIND-TUNNEL INVESTIGATION OF MUTUAL INTERFERENCE LOADS ON A SUPERSONIC BOMBER CONFIGURATION AND STORE DURING SEPARATION AT MACH NUMBERS OF 1.57, 1.77, AND 2.01

COORD. NO. AF-AM-91

By Owen G. Morris and Kenneth L. Turner

9/10/59 JLB

FDA 9, effective Sept. 1, 1959

SUMMARY

An investigation has been conducted in the Langley Unitary Plan wind tunnel to determine the mutual interference loads on a supersonic bomber configuration and store during separation of the store. The complete airplane model and the store model with and without fins were tested with the store at 43 positions varying in longitudinal and vertical distance relative to the airplane at Mach numbers of 1.57, 1.77, and 2.01. Tests were made for airplane angles of attack from -1.0° to 5° and store angles of attack from -10° to 12° at zero sideslip, and at airplane sideslip angles of 2° and -2° for store sideslip angles of 4° and 0°, respectively. The Reynolds numbers for the tests, based on wing mean aerodynamic chord, are 1.98×10^{6}, 1.85×10^{6}, and 1.68×10^{6} at Mach numbers of 1.57, 1.77, and 2.01, respectively.

I.N. 11,325

INTRODUCTION

The determination of the path followed by a store released from an aircraft in flight is required to determine: (a) that a safe separation of the store from the aircraft is possible, (b) that the accelerations experienced during the separation are within the design load limits, (c) the impact point.

~~SECRET~~ UNCLASSIFIED

The problem of determining the path requires a knowledge of the aerodynamic loads on the aircraft and store as the store traverses the interference field produced by the aircraft. It is not possible to determine the interference loads by existing theoretical methods. In order to supply such information for an airplane currently nearing production, the mutual interference loads between a supersonic bomber configuration and a store during separation of the store have been experimentally determined at the Langley Unitary Plan wind tunnel.

The aerodynamic forces and moments were measured separately for the complete airplane model and for the store model, with and without fins. The store model was tested at 43 different positions under the airplane model in the plane of symmetry of the airplane. At each position of the store, the store and the airplane were independently moved through a range of angle of attack at three angles of yaw.

The results are presented in tabular form without analysis or discussion.

SYMBOLS

The aerodynamic moments on the airplane and store have been referred to stability axes. The airplane center of gravity (moment center) is located at 0.25 mean aerodynamic chord and at 0.10 inch above the zero water line. The store center of gravity is located on the store center line 6.667 inches behind the nose. Symbols used in this paper are as follows:

C_D' approximate drag coefficient, $\frac{F_{D,R}'}{qS}$ or $\frac{F_{D,P}'}{qA}$

C_L lift coefficient, $\frac{F_{L,R}}{qS}$ or $\frac{F_{L,P}}{qA}$

C_l rolling-moment coefficient, $\frac{M_{X,R}}{qSb}$ or $\frac{M_{X,P}}{qAd}$

C_m pitching-moment coefficient, $\frac{M_{Y,R}}{qS\bar{c}}$ or $\frac{M_{Y,P}}{qAd}$

C_n yawing-moment coefficient, $\frac{M_{Z,R}}{qSb}$ or $\frac{M_{Z,P}}{qAd}$

C_Y side-force coefficient, $\frac{F_{Y,R}}{qS}$ or $\frac{F_{Y,P}}{qA}$

F_D force along X-axis, lb

F_L force along Z-axis, lb

F_Y force along Y-axis, lb

M_X moment about X-axis, in-lb

M_Y moment about Y-axis, in-lb

M_Z moment about Z-axis, in-lb

S wing area, 0.963 sq ft

A cross-sectional area of store, 0.0122 sq ft

b wing span, 17.058 in.

$\bar{c}$ wing mean aerodynamic chord of airplane, 10.85 in.

d maximum store diameter, 1.500 in.

q dynamic pressure, lb/sq ft

x_a horizontal distance parallel to X-axis measured from attached store position, in.

z_a vertical distance parallel to Z-axis measured from attached store position, in.

α angle of attack, deg

$\Delta\alpha$ flow angularity correction, deg

β angle of sideslip, deg

Subscripts:

R return component (airplane model)

P bomb pod (store model)

APPARATUS AND METHODS

Tunnel

The tests were conducted in the low Mach number test section of the Langley Unitary Plan wind tunnel, which is a variable-pressure, return-flow type. The test section is 4 feet square and approximately 7 feet in length. The nozzle leading to the test section is of the asymmetric sliding-block type, which permits a continuous variation of Mach number from approximately 1.56 to 2.80.

Models and Support System

The airplane model configuration, also called the return component, consisted of a 60° conical-cambered delta wing, an indented fuselage, four pylon-mounted engine nacelles, and a vertical tail (fig. 1). The store configuration, also called the bomb pod, is shown in figure 2 and it consisted of a body of revolution with a fineness ratio of 10.15 to which was added a mounting pylon and four stabilizing fins. The geometric characteristics of the models are presented in table I and photographs of the models are presented in figure 3.

The airplane and store were attached to individual internally mounted six-component strain-gage balances which in turn were attached to individual stings mounted on a special support mechanism. The support mechanism allowed both the airplane and store models to be independently positioned at various predetermined horizontal distances x_a, vertical distances z_a, and angles of attack α (fig. 4).

During the sideslip tests, the store model was rotated about its center of gravity to give the store a positive 2° angle of sideslip increment with respect to the airplane model. The sideslip tests were then conducted by yawing the entire support mechanism.

TESTS

The tests were conducted with the complete airplane model and the store model both with and without fins. Tests were made through an angle-of-attack range of -1° to 5° for the airplane model and -10° to 12° for the store model. Tests were made with both models at 0° sideslip and also with the store model given a 2° sideslip increment with respect to the airplane. The airplane model was tested at 2° and -2° sideslip, which resulted in sideslip of the store of 4° and 0°, respectively.

At any given angle of attack of the airplane model, the store model was tested at various separation distances (x_a and z_a, as shown in fig. 4) and at several angles of attack.

The tests were conducted at Mach numbers of 1.57, 1.77, and 2.01 with Reynolds numbers based on the airplane model mean aerodynamic chord of 1.98×10^6, 1.85×10^6, and 1.68×10^6, respectively. For all tests, the stagnation pressure was 8 pounds per square inch absolute, the stagnation temperature was 125° F, and the dewpoint was less than -30° F.

For all tests, the elevons of the airplane model were set with the trailing edge up 3° relative to the wing chord line.

CORRECTIONS AND ACCURACY

All angles of attack, angles of sideslip, and separation distances have been corrected for deflection of the sting due to aerodynamic loads. The lateral displacements of the models due to sting deflection during sideslip tests were computed but in all cases were found to be less than 0.05 inch.

For all tests, the nacelles of the airplane model were open to air flow. Neither the internal flow losses nor the nacelle base pressures were measured, however, and no corrections have been made for their effects. The balance-chamber pressures were measured for both the airplane and store models, and the drag data for each were corrected to correspond to a balance-chamber pressure equal to free-stream pressure.

Pressure gradients in the test section region occupied by the model have been determined and are sufficiently small to make buoyancy effects negligible. The maximum deviation of local Mach number in the portion of the tunnel occupied by the model was ±0.015 from the average values presented in the data. Although the test section has not been completely calibrated as yet, preliminary tests indicate that a small flow angularity in a vertical plane is present in the test section. Based on these preliminary tests, the following corrections have been applied to the measured angles of attack of both the airplane and store models at the indicated Mach numbers:

M	$\Delta\alpha$, deg
1.57	0.20
1.77	.40
2.01	.75

[redacted]

[redacted]

Based on pretest calibration and reproducibility, the accuracy of the force and moment coefficients, distances presented, and relative angles are estimated to be within the following limits:

$C_{L,R}$	±0.002
$C_{D,R}'$	±0.0005
$C_{m,R}$	±0.0005
$C_{l,R}$	±0.0001
$C_{n,R}$	±0.0001
$C_{Y,R}$	±0.001
$C_{L,P}$	±0.04
$C_{D,P}'$	±0.01
$C_{m,P}$	±0.08
$C_{l,P}$	±0.03
$C_{n,P}$	±0.04
$C_{Y,P}$	±0.02
α_R, deg	±0.1
α_P, deg	±0.1
β_R, deg	±0.1
β_P, deg	±0.1
x_a, in.	±0.1
z_a, in.	±0.1

PRESENTATION OF RESULTS

The results are presented as tabulated coefficients of forces and moments referred to the stability axes system in tables II to VII. The aerodynamic moments on the airplane and store are taken about their respective centers of gravity as shown in figures 1(a) and 2. The following list is presented to facilitate use of the tables:

Table I - Geometric characteristics of the models

Table II - Aerodynamic characteristics of return component and bomb pod with mutual interference: $\beta_P = 0^\circ$; $\beta_R = 0^\circ$

Table III - Aerodynamic characteristics of return component and bomb pod less fins with mutual interference; $\beta_P = 0^\circ$; $\beta_R = 0^\circ$

Table IV - Aerodynamic characteristics of return component in presence of bomb pod; $\beta_P = 4^\circ$; $\beta_R = 2^\circ$

Table V - Aerodynamic characteristics of bomb pod in presence of return component; $\beta_P = 4^\circ$; $\beta_R = 2^\circ$

Table VI - Aerodynamic characteristics of return component in presence of bomb pod; $\beta_P = 0^\circ$; $\beta_R = -2^\circ$

Table VII - Aerodynamic characteristics of bomb pod in presence of return component; $\beta_P = 0^\circ$; $\beta_R = -2^\circ$

Figure 5 shows representative schlieren photographs taken during the investigation.

Langley Aeronautical Laboratory,
National Advisory Committee for Aeronautics,
Langley Field, Va., October 2, 1957.

Owen G. Morris
Owen G. Morris
Supervisory Aeronautical Research Engineer

Kenneth L. Turner
Kenneth L. Turner
Aeronautical Research Engineer

Approved: Herbert A. Wilson
Herbert A. Wilson
Chief of Unitary Plan Wind Tunnel Division

DY

TABLE I.- GEOMETRIC CHARACTERISTICS OF THE MODELS

[All wing dimensions defining spanwise locations or chord lengths are true dimensions in the chord plane unless otherwise specified. Station numbers are in inches]

Wing:	
Span, in.	17.058
Total area, sq in.	138.828
Exposed area, sq in.	118.540
Aspect ratio	2.096
Taper ratio	0
Airfoil section parallel to root chord:	
Root chord	NACA 0003-46
Outboard of span station 0.565b/2	NACA 0004-08
Camber	0.0286b/2 offset tangent at 0.85b/2
Leading-edge sweepback, deg	60
Trailing-edge sweepback, deg	-10
Incidence, deg	3
Dihedral, deg	2.23
Tip-chord length	0
Root-chord length, in.	16.277
Distance above parting plane at root chord:	
Leading edge, in.	0.899
Trailing edge, in.	0.174
Hinge line, in.	0.174
Airplane station of root chord at:	
Leading edge	8.825
Trailing edge	25.080
Hinge line	22.663
25 percent $\bar{c}$	16.451
37.5 percent $\bar{c}$	17.806
Length of $\bar{c}$, in.	10.851
Span station of $\bar{c}$, in.	2.843
Elevon:	
Hinge line at airplane station, in.	22.782
Inboard end of elevon at span station	1.413
Outboard end of elevon at span station	5.925
Area of one elevon, sq in.	8.002
Fuselage:	
Overall length, in.	26.866
Maximum height, in.	1.938
Maximum width, in.	1.604
Maximum cross-sectional area, sq in.	2.530
Base area, sq in.	1.368
Cavity area, sq in.	1.039
Vertical tail:	
Span, in.	4.350
Total area, sq in.	14.400
Exposed area, sq in.	14.110
Area of control surface (rudder), sq in.	3.600
Leading-edge sweepback, deg	52
Trailing-edge sweepback, deg	26.71
Hinge line sweepback, deg	35.51
Aspect ratio	2.628
Taper ratio	0.324
Tip-chord length, in.	1.621
Root-chord length, in.	5.000
Airplane station of root chord at leading edge, in.	23.384
Distance of root chord above parting plane, in.	1.550
Mean aerodynamic chord, in.	3.598
Fuselage station at leading edge of mean aerodynamic chord, in.	25.694
Distance of mean aerodynamic chord above parting plane, in.	3.355
Airfoil section parallel to root chord	NACA 0005-64

TABLE I.- GEOMETRIC CHARACTERISTICS OF THE MODELS - Concluded

[All wing dimensions defining spanwise locations or chord lengths are true dimensions in the chord plane unless otherwise specified. Station numbers are in inches]

Nacelle:	
Overall length, in.	7.250
Maximum height above thrust plane (nacelle station 160), in.	0.560
Maximum depth below thrust plane, in.	0.750
Maximum width, in.	1.119
Nacelle lip radius, in.	0.002
Duct inlet area including spike area (1 duct), sq in.	0.363
Duct area at rake (1 duct), sq in.	0.454
Duct area at exit (1 duct), sq in.	0.336
Nacelle exit base area (1 duct), sq in.	0.490
Spike apex angle, deg	50
Location of inboard nacelle:	
Longitudinal location of nacelle inlet at thrust center line:	
Airplane station	9.827
Distance from wing chord plane to thrust center line:	
Nacelle station 0	1.617
Nacelle station 5.322	1.431
Nacelle station 7.250	1.364
Wing span station of nacelle center line	3.650
Angle between wing chord plane and nacelle center line, deg	-2
Leading-edge angle, deg	13.03
Trailing-edge angle, deg	9.62
Location of outboard nacelle:	
Longitudinal location of nacelle inlet at thrust center line:	
Airplane station	16.748
Distance from wing chord plane to thrust center line:	
Nacelle station 0, in.	1.095
Nacelle station 3.332, in.	0.863
Nacelle station 7.250, in.	0.590
Wing-span station of nacelle center line, in.	6.500
Angle between wing chord plane and nacelle center line, deg	-4
Pylon:	
Leading-edge sweepback, deg	75
Trailing-edge sweepback, deg	75
Main landing-gear fairings:	
Span station of fairing center line	2.000
Maximum width, upper fairing, in.	1.184
Maximum width, lower fairing, in.	1.226
Maximum height above chord plane, in.	0.314
Maximum depth below chord plane, in.	0.360
Store, modified:	
Overall length (from pod nose), in.	15.276
Maximum diameter, in.	1.500
Maximum cross-sectional area, sq in.	1.767
Pod nose at airplane station	5.488
Distance from parting plane to pod center line, in.	0.825
Angle between pod center line and parting plane, deg	0
Base area, sq in.	0.454
Store, unmodified; physical dimensions and location are same as for modified pod except as follows:	
Overall length (from pod station 0), in.	17.295
Base area	0
Fineness ratio	11.392
Store fins:	
Span, in.	2.65
Area per fin, sq in.	2.025
Exposed area per fin, sq in.	0.964
Aspect ratio	1.734
Leading-edge sweepback, deg	60
Taper ratio	0.111
Trailing-edge sweepforward, deg	6.42
Length of fin mean aerodynamic chord, in.	1.853
Pod station at leading edge of root chord	12.545
Pod station at trailing edge of root chord	15.295
Airfoil section parallel to root chord	NACA 0005-64

TABLE II.- AERODYNAMIC CHARACTERISTICS OF RETURN COMPONENT AND BOMB POD WITH MUTUAL INTERFERENCE; $\beta_P = 0^o$; $\beta_R = 0^o$

M	α_R, deg	α_P, deg	x_a, in.	z_a, in.	$C_{L,R}$	$C_{D,R}'$	$C_{m,R}$	$C_{L,P}$	$C_{D,P}'$	$C_{m,P}$
1.570	-0.37	12.44	0.89	2.00	.0286	.0325	.0134	.9947	.4492	-1.2954
1.570	-0.29	12.41	1.73	1.99	.0365	.0329	.0144	1.0464	.4673	-1.9940
1.570	-0.22	12.30	2.56	2.02	.0455	.0335	.0145	1.0974	.4605	-2.7914
1.570	-0.12	12.26	4.25	2.05	.0633	.0346	.0134	1.0192	.4931	-3.0059
1.570	-0.29	12.43	0.89	3.27	.0401	.0331	.0130	.9903	.4166	-1.0881
1.570	-0.25	12.40	1.73	3.28	.0444	.0334	.0136	.9683	.4203	-1.2627
1.570	-0.21	12.38	2.56	3.28	.0530	.0339	.0128	1.0064	.4381	-1.7624
1.570	-0.18	12.26	4.25	3.33	.0643	.0340	.0102	1.0616	.4489	-2.7199
1.570	-0.22	12.30	5.93	3.31	.0696	.0335	.0066	1.0354	.5118	-2.6127
1.570	-0.30	12.31	7.59	3.32	.0680	.0330	.0038	1.1378	.5578	-2.6932
1.570	-0.20	12.44	2.56	4.98	.0598	.0336	.0108	.9564	.4051	-.7806
1.570	-0.24	12.37	4.25	4.99	.0639	.0333	.0077	1.0393	.4371	-1.6663
1.570	-0.31	12.33	5.93	4.99	.0645	.0330	.0043	1.0541	.4590	-2.0449
1.570	-0.37	12.36	7.59	5.00	.0634	.0325	.0019	1.0582	.5106	-2.0361
1.570	-0.39	10.36	0.03	1.97	.0274	.0322	.0125	.6871	.3288	-.8738
1.570	-0.34	10.37	0.88	1.97	.0330	.0326	.0133	.7122	.3514	-1.1514
1.570	-0.27	10.29	1.72	2.01	.0399	.0331	.0143	.7808	.3645	-1.8250
1.570	-0.20	10.24	2.55	2.02	.0483	.0337	.0148	.8732	.3718	-2.6077
1.570	-0.10	10.19	4.22	2.07	.0679	.0347	.0127	.7724	.4035	-2.5685
1.570	-0.33	10.33	0.02	3.28	.0346	.0327	.0132	.7624	.3426	-.8551
1.570	-0.28	10.33	0.87	3.28	.0423	.0332	.0132	.7044	.3273	-.9290
1.570	-0.23	10.33	1.72	3.28	.0491	.0338	.0133	.7149	.3394	-1.2022
1.570	-0.19	10.28	2.57	3.30	.0565	.0340	.0125	.7607	.3493	-1.6901
1.570	-0.17	10.22	4.22	3.31	.0687	.0340	.0095	.8570	.3715	-2.5786
1.570	-0.22	10.21	5.90	3.33	.0709	.0334	.0061	.8408	.4256	-2.3970
1.570	-0.30	10.29	7.59	3.30	.0699	.0330	.0031	.9433	.4761	-2.5552
1.570	-0.27	10.38	0.03	4.95	.0464	.0333	.0123	.8365	.3661	-.9262
1.570	-0.23	10.37	0.87	4.98	.0514	.0334	.0123	.7643	.3539	-.5851
1.570	-0.21	10.37	2.55	4.97	.0591	.0336	.0108	.6973	.3287	-.6826
1.570	-0.25	10.29	4.23	4.99	.0648	.0333	.0070	.8050	.3510	-1.6376
1.570	-0.23	10.23	5.68	3.59	.0702	.0334	.0061	.8045	.4035	-2.1427
1.570	-0.31	10.25	5.90	5.00	.0658	.0328	.0036	.8258	.3705	-1.9156
1.570	-0.37	10.29	7.59	4.98	.0653	.0324	.0012	.8592	.4292	-1.8885
1.570	-0.40	10.26	7.58	7.49	.0542	.0318	.0032	.9137	.3811	-2.0299
1.570	-0.22	10.25	5.90	3.32	.0718	.0333	.0060	.8742	.4277	-2.3953
1.570	-0.23	10.30	4.23	4.99	.0652	.0335	.0072	.8388	.3511	-1.6940
1.570	-0.23	8.27	0.86	7.51	.0609	.0334	.0090	.6644	.3012	-.9435
1.570	-0.29	8.30	2.56	7.49	.0635	.0331	.0057	.6747	.3108	-1.0619
1.570	-0.36	8.28	4.22	7.50	.0614	.0326	.0028	.6133	.3041	-.7754
1.570	-0.41	8.24	5.90	7.50	.0561	.0321	.0022	.6277	.3003	-1.2038
1.570	-0.33	5.17	0.01	2.06	.0317	.0325	.0141	.2041	.2284	-.2265
1.570	-0.27	5.14	0.85	2.06	.0386	.0329	.0145	.2831	.2486	-.8786
1.570	-0.20	5.07	1.68	2.09	.0477	.0336	.0149	.3913	.2554	-1.5637
1.570	-0.13	5.05	2.52	2.10	.0575	.0342	.0152	.4876	.2661	-2.1948
1.570	-0.06	5.06	4.19	2.13	.0760	.0352	.0123	.2944	.2916	-1.4748
1.570	-0.28	5.19	0.01	3.32	.0403	.0330	.0135	.2530	.2281	-.1238
1.570	-0.22	5.23	0.85	3.29	.0478	.0336	.0141	.2375	.2260	-.2870
1.570	-0.17	5.17	1.68	3.32	.0561	.0340	.0137	.2951	.2356	-.8559
1.570	-0.13	5.10	2.52	3.36	.0660	.0346	.0120	.3811	.2382	-1.4581
1.570	-0.15	5.09	4.19	3.36	.0752	.0341	.0081	.3923	.2498	-1.6287
1.570	-0.22	5.11	5.86	3.36	.0765	.0335	.0043	.4264	.3030	-1.6907
1.570	-0.31	5.12	7.55	3.34	.0733	.0330	.0012	.5507	.3471	-1.9954
1.570	-0.22	5.24	0.02	4.97	.0501	.0336	.0134	.2652	.2120	-.1139
1.570	-0.18	5.23	0.85	5.00	.0584	.0338	.0122	.1974	.2109	.2132
1.570	-0.19	5.23	2.52	4.99	.0659	.0337	.0095	.2315	.2235	-.1694
1.570	-0.26	5.11	4.19	5.03	.0689	.0333	.0054	.3973	.2340	-1.3084
1.570	-0.32	5.18	5.87	5.00	.0698	.0329	.0019	.3335	.2467	-.9573
1.570	-0.40	5.17	7.55	5.00	.0646	.0322	.0001	.3736	.2935	-.9946
1.570	-0.24	5.18	0.85	7.53	.0619	.0334	.0085	.3764	.2308	-.5559
1.570	-0.30	5.22	2.52	7.50	.0648	.0332	.0048	.3656	.2285	-.5787
1.570	-0.37	5.21	4.20	7.52	.0648	.0325	.0015	.3251	.2399	-.3879
1.570	-0.41	5.19	5.87	7.50	.0594	.0320	.0012	.3773	.2433	-.8783
1.570	-0.41	5.18	7.55	7.49	.0529	.0316	.0032	.4630	.2453	-1.4295
1.570	-0.35	5.24	0.85	10.00	.0634	.0327	.0030	.4198	.2396	-.5933
1.570	-0.40	5.23	2.52	10.00	.0610	.0321	.0012	.3869	.2346	-.5587
1.570	-0.41	5.20	4.20	10.01	.0549	.0317	.0027	.4098	.2366	-.7066
1.570	-0.38	5.17	5.86	10.03	.0515	.0319	.0050	.3763	.2354	-.5560
1.570	-0.36	5.21	7.55	10.00	.0482	.0321	.0071	.3697	.2466	-.5931
1.570	-0.22	5.08	5.86	3.37	.0777	.0335	.0042	.4321	.2988	-1.6920
1.570	-0.39	5.18	5.87	7.51	.0611	.0322	.0012	.3999	.2355	-.9484
1.570	-0.12	-0.04	1.70	2.12	.0535	.0341	.0168	.0124	.2365	-1.1867
1.570	-0.05	-0.05	2.54	2.14	.0654	.0347	.0159	.0188	.2403	-1.3165
1.570	0.00	-0.03	4.20	2.16	.0844	.0354	.0121	-.0985	.2753	-.9128
1.570	-0.22	0.07	0.01	3.36	.0463	.0335	.0143	-.2227	.2096	.6620
1.570	-0.15	0.05	0.84	3.38	.0559	.0341	.0145	-.1713	.2253	.2632
1.570	-0.10	0.00	1.69	3.41	.0684	.0346	.0128	-.0911	.2290	-.3495
1.570	-0.08	-0.04	2.54	3.42	.0756	.0350	.0114	.0061	.2184	-1.0303
1.570	-0.14	-0.03	4.20	3.42	.0799	.0344	.0071	-.0615	.2313	-.6789
1.570	-0.23	-0.03	5.88	3.41	.0822	.0337	.0021	.0220	.2708	-.9450
1.570	-0.33	0.00	7.55	3.39	.0782	.0331	-.0012	.1894	.3136	-1.5044

TABLE II.- AERODYNAMIC CHARACTERISTICS OF RETURN COMPONENT AND BOMB POD WITH MUTUAL INTERFERENCE; $\beta_P = 0^o$; $\beta_R = 0^o$ - Continued

M	α_R, deg	α_P, deg	x_a, in.	z_a, in.	$C_{L,R}$	$C'_{D,R}$	$C_{m,R}$	$C_{L,P}$	$C'_{D,P}$	$C_{m,P}$
1.570	-0.15	0.10	0.01	5.05	.0592	.0339	.0134	-.2300	.1866	.9218
1.570	-0.12	0.12	0.84	5.05	.0688	.0343	.0116	-.2803	.1954	1.1021
1.570	-0.17	0.09	2.54	5.05	.0739	.0340	.0078	-.1167	.2178	.2487
1.570	-0.25	0.05	4.20	5.05	.0755	.0335	.0033	.0590	.2078	-.7626
1.570	-0.34	0.06	5.88	5.05	.0740	.0328	-.0006	-.0701	.2246	-.1882
1.570	-0.41	0.07	7.55	5.04	.0687	.0319	-.0019	-.0035	.2680	-.3861
1.570	-0.22	0.11	0.84	7.55	.0692	.0335	.0067	-.0284	.1906	.1222
1.570	-0.30	0.13	2.54	7.54	.0725	.0331	.0022	-.0841	.1969	.2914
1.570	-0.39	0.12	4.20	7.53	.0679	.0324	-.0005	-.0783	.2201	.2126
1.570	-0.42	0.09	5.88	7.52	.0607	.0317	.0002	.0463	.2254	-.5020
1.570	-0.41	0.09	7.55	7.51	.0541	.0317	.0028	.0188	.2171	-.4435
1.570	-0.36	0.13	0.84	10.04	.0666	.0327	.0012	-.0180	.2027	.1839
1.570	-0.42	0.12	2.54	10.03	.0623	.0319	-.0000	-.0118	.2028	.0793
1.570	-0.42	0.14	4.20	10.01	.0548	.0317	.0022	-.0281	.1978	.0451
1.570	-0.37	0.12	5.88	10.03	.0524	.0320	.0052	-.0616	.2058	.1954
1.570	-0.37	0.13	7.55	10.01	.0474	.0321	.0071	-.0049	.2239	-.1541
1.570	-0.42	0.09	0.84	12.55	.0554	.0318	.0020	.0667	.2092	-.2117
1.570	-0.39	0.10	2.54	12.55	.0518	.0318	.0045	.0159	.2025	.0462
1.570	-0.36	0.12	4.20	12.54	.0501	.0321	.0066	.0048	.2045	.0621
1.570	-0.37	0.11	5.88	12.54	.0485	.0322	.0069	.0164	.2028	-.0440
1.570	-0.35	0.11	7.55	12.54	.0500	.0322	.0070	-.0057	.1973	.0004
1.570	-0.36	0.14	0.84	15.03	.0497	.0323	.0065	.0598	.2114	-.0042
1.570	-0.36	0.11	2.54	15.05	.0487	.0323	.0068	.0662	.2096	-.1346
1.570	-0.36	0.10	4.20	15.04	.0484	.0323	.0070	.0835	.2022	-.2807
1.570	-0.35	0.13	5.88	15.04	.0516	.0324	.0068	.0325	.2014	.0030
1.570	-0.35	0.13	7.55	15.04	.0503	.0325	.0069	.0272	.2035	-.0341
1.570	-0.22	-5.00	-0.01	2.11	.0426	.0329	.0154	-.5668	.3218	.6987
1.570	-0.11	-5.14	0.83	2.18	.0532	.0340	.0172	-.4749	.3161	.0052
1.570	-0.01	-5.17	1.67	2.19	.0667	.0348	.0174	-.4179	.2995	-.5509
1.570	0.04	-5.15	2.51	2.19	.0765	.0356	.0165	-.4619	.3125	-.4750
1.570	0.05	-5.20	4.19	2.23	.0928	.0358	.0116	-.4579	.3358	-.6424
1.570	-0.15	-4.98	-0.01	3.41	.0558	.0340	.0147	-.6736	.2857	1.4725
1.570	-0.08	-5.08	0.83	3.46	.0654	.0346	.0146	-.5910	.3061	.8595
1.570	-0.03	-5.12	1.68	3.45	.0775	.0351	.0130	-.4667	.2900	.0666
1.570	-0.03	-5.13	2.52	3.45	.0837	.0354	.0111	-.3934	.2777	-.4037
1.570	-0.12	-5.11	4.19	3.47	.0885	.0345	.0051	-.4604	.2886	-.0900
1.570	-0.24	-5.10	5.87	3.42	.0875	.0337	.0000	-.3786	.3193	-.4197
1.570	-0.36	-5.14	7.55	3.43	.0826	.0329	-.0040	-.1570	.3434	-1.2373
1.570	-0.09	-4.99	0.00	5.11	.0671	.0343	.0137	-.7851	.2587	2.2862
1.570	-0.07	-5.06	0.84	5.15	.0760	.0347	.0117	-.7429	.2800	1.9924
1.570	-0.15	-5.06	2.51	5.12	.0810	.0344	.0063	-.5376	.2846	.8059
1.570	-0.26	-5.09	4.19	5.12	.0825	.0335	.0008	-.4591	.2684	.3470
1.570	-0.37	-5.10	5.87	5.13	.0801	.0327	-.0036	-.5201	.2822	.6211
1.570	-0.44	-5.09	7.52	5.10	.0716	.0318	-.0040	-.4095	.3201	.1420
1.570	-0.22	-5.03	0.83	7.62	.0761	.0337	.0048	-.4758	.2431	.8660
1.570	-0.33	-5.05	2.51	7.63	.0750	.0330	-.0001	-.5533	.2608	1.2217
1.570	-0.44	-7.48	4.29	9.45	.0583	.0313	.0000	-.7613	.3292	1.4370
1.570	-0.44	-5.04	5.87	7.56	.0628	.0315	-.0012	-.3250	.2689	-.0878
1.570	-0.42	-5.08	7.55	7.58	.0535	.0316	.0029	-.4088	.2771	.3080
1.570	-0.37	-4.99	0.83	10.08	.0719	.0325	-.0012	-.4423	.2499	.8573
1.570	-0.43	-5.01	2.51	10.08	.0640	.0317	-.0012	-.4472	.2540	.8331
1.570	-0.43	-5.01	4.19	10.07	.0546	.0314	.0020	-.4640	.2517	.8376
1.570	-0.37	-5.04	5.87	10.09	.0511	.0320	.0056	-.4956	.2697	.9617
1.570	-0.37	-5.03	7.55	10.07	.0489	.0321	.0066	-.3871	.2707	.2892
1.570	-0.42	-4.98	0.83	12.56	.0581	.0317	.0009	-.3291	.2484	.3247
1.570	-0.39	-5.00	2.51	12.56	.0521	.0318	.0046	-.4303	.2542	.8533
1.570	-0.36	-5.02	4.19	12.57	.0498	.0321	.0066	-.4186	.2536	.7217
1.570	-0.37	-5.04	5.87	12.57	.0488	.0320	.0068	-.4236	.2546	.6843
1.570	-0.36	-5.00	7.55	12.55	.0487	.0322	.0072	-.4629	.2524	.8101
1.570	-0.37	-4.99	0.83	15.08	.0491	.0323	.0066	-.3508	.2619	.5364
1.570	-0.37	-5.02	2.51	15.09	.0490	.0322	.0066	-.3112	.2553	.3070
1.570	-0.35	-5.00	4.19	15.08	.0500	.0322	.0069	-.3456	.2477	.4316
1.570	-0.35	-5.01	5.87	15.09	.0490	.0325	.0072	-.4184	.2514	.7466
1.570	-0.35	-5.02	7.55	15.09	.0503	.0324	.0070	-.4069	.2511	.6534
1.570	-0.41	-5.09	4.19	7.63	.0701	.0320	-.0025	-.4773	.2729	.7124
1.570	0.01	-8.21	2.51	3.49	.0905	.0356	.0105	-.7251	.3824	.0534
1.570	-0.11	-8.27	4.20	3.52	.0947	.0345	.0037	-.7592	.3793	.1905
1.570	-0.25	-8.21	5.87	3.49	.0924	.0336	-.0024	-.6551	.4017	-.2059
1.570	-0.38	-8.22	7.55	3.48	.0850	.0326	-.0058	-.4159	.4063	-1.1568
1.570	-0.06	-8.07	0.00	5.18	.0758	.0346	.0123	-1.1202	.3632	2.8407
1.570	-0.04	-8.08	0.83	5.17	.0819	.0348	.0111	-1.0324	.3762	2.3552
1.570	-0.14	-8.11	2.51	5.15	.0855	.0343	.0053	-.7994	.3703	.9971
1.570	-0.27	-8.17	4.20	5.18	.0870	.0334	-.0012	-.7897	.3564	.9426
1.570	-0.39	-8.14	5.87	5.15	.0823	.0326	-.0052	-.8159	.3669	.9755
1.570	-0.45	-8.19	7.55	5.14	.0729	.0316	-.0052	-.6696	.3961	.3216
1.570	-0.38	-8.18	7.55	3.46	.0847	.0327	-.0058	-.4170	.4083	-1.1604
1.570	-0.22	-10.14	0.83	7.68	.0841	.0337	.0017	-1.0087	.4057	1.6739
1.570	-0.34	-10.16	2.52	7.68	.0835	.0327	-.0036	-1.1041	.4407	1.9443
1.570	-0.44	-10.20	4.19	7.67	.0756	.0318	-.0054	-.9256	.4444	1.0240
1.570	-0.46	-10.26	5.88	7.67	.0625	.0311	-.0021	-.8102	.4151	.3628

TABLE II.- AERODYNAMIC CHARACTERISTICS OF RETURN COMPONENT AND BOMB POD WITH MUTUAL INTERFERENCE; $\beta_P = 0^o$; $\beta_R = 0^o$ - Continued

M	α_R, deg	α_P, deg	x_a, in.	z_a, in.	$C_{L,R}$	$C_{D,R}$	$C_{m,R}$	$C_{L,P}$	$C_{D,P}$	$C_{m,P}$
1.570	-0.42	-10.22	7.55	7.64	.0522	.0315	.0032	-.9212	.4322	.8425
1.570	-0.41	-10.14	0.83	10.18	.0746	.0323	-.0037	-.9193	.4023	1.4317
1.570	-0.45	-10.18	2.52	10.18	.0647	.0314	-.0025	-.9398	.4124	1.4506
1.570	-0.43	-10.22	4.20	10.19	.0555	.0312	.0015	-1.0008	.4174	1.6338
1.570	-0.37	-10.21	5.88	10.18	.0504	.0319	.0060	-.9802	.4328	1.3725
1.570	-0.37	-10.26	7.56	10.18	.0497	.0320	.0064	-.8551	.4229	.6578
1.570	-0.43	-10.19	0.84	12.67	.0588	.0313	.0002	-.8565	.4003	1.0941
1.570	-0.40	-10.15	2.52	12.64	.0492	.0318	.0052	-.9456	.4142	1.5294
1.570	-0.37	-10.15	4.19	12.63	.0490	.0320	.0066	-.9231	.4098	1.3560
1.570	-0.37	-10.16	5.88	12.63	.0487	.0319	.0067	-.9013	.4058	1.2478
1.570	-0.36	-10.15	7.55	12.62	.0477	.0321	.0074	-.9785	.4173	1.5126
1.570	-0.37	-10.18	0.84	15.16	.0488	.0323	.0068	-.8269	.4107	1.0102
1.570	-0.37	-10.18	2.52	15.15	.0478	.0322	.0069	-.8163	.4023	.8653
1.570	-0.35	-10.16	4.19	15.16	.0490	.0322	.0072	-.8968	.4031	1.3365
1.570	-0.35	-10.19	5.88	15.17	.0494	.0325	.0071	-.9009	.4060	1.2346
1.570	-0.36	-10.16	7.55	15.16	.0485	.0323	.0072	-.9009	.4093	1.2479
1.570	-0.44	-10.20	4.19	7.67	.0744	.0319	-.0052	-.9160	.4426	1.0095
1.570	-0.34	-0.49	0.00	0.49	.0316	.0321	.0138	-.0215	.2612	-.6887
1.570	-0.26	-0.53	0.84	0.51	.0362	.0323	.0157	.0473	.2634	-1.1835
1.570	-0.17	-0.55	1.68	0.52	.0430	.0329	.0176	.0825	.2700	-1.5143
1.570	-0.04	-0.48	2.53	1.17	.0609	.0345	.0179	.0646	.2661	-1.3302
1.570	-0.23	-0.45	0.84	1.14	.0406	.0328	.0159	-.0103	.2527	-.7694
1.570	-0.13	-0.54	1.69	1.19	.0493	.0336	.0175	.0540	.2512	-1.3657
1.570	-0.30	-0.48	0.01	1.17	.0361	.0323	.0139	-.1115	.2403	-.2655
1.570	-0.05	-0.56	2.53	1.21	.0593	.0344	.0182	-.0008	.2704	-1.3128
1.570	-0.34	2.57	0.02	0.48	.0311	.0323	.0139	.2063	.2593	-.8307
1.570	-0.28	2.56	0.87	0.48	.0345	.0324	.0153	.2803	.2655	-1.3396
1.570	-0.21	2.53	1.69	0.49	.0402	.0328	.0169	.3547	.2747	-1.8867
1.570	-0.32	2.59	0.01	1.14	.0324	.0323	.0143	.1402	.2367	-.6064
1.570	-0.26	2.57	0.86	1.16	.0375	.0327	.0155	.1974	.2452	-1.0592
1.570	-0.18	2.53	1.69	1.17	.0447	.0333	.0167	.2778	.2490	-1.6727
1.570	-0.11	2.54	2.53	1.19	.0544	.0342	.0171	.2277	.2594	-1.5952
1.570	-0.34	2.54	0.01	1.16	.0282	.0323	.0149	.1239	.2377	-.6145
1.570	-0.33	-2.53	0.00	0.52	.0326	.0320	.0137	-.1611	.2704	-.5193
1.570	-0.25	-2.58	0.84	0.53	.0378	.0325	.0157	-.0807	.2700	-1.1313
1.570	-0.15	-2.62	1.68	0.56	.0466	.0331	.0175	-.0958	.2836	-1.2042
1.570	-0.29	-2.49	0.00	1.18	.0373	.0322	.0139	-.2569	.2650	-.0572
1.570	-0.20	-2.58	0.84	1.22	.0440	.0328	.0160	-.1988	.2656	-.5986
1.570	-0.10	-2.61	1.68	1.23	.0526	.0338	.0179	-.1352	.2636	-1.1291
1.570	0.00	-2.61	2.53	1.23	.0645	.0347	.0185	-.1663	.2919	-1.2100
1.570	1.52	10.33	0.02	2.02	.1247	.0374	-.0088	.5350	.2815	-.1247
1.570	1.56	10.35	0.87	1.99	.1281	.0378	-.0079	.6168	.3125	-.8410
1.570	1.56	10.33	0.87	1.85	.1281	.0378	-.0079	.6450	.3138	-.9255
1.570	1.72	10.23	2.55	2.03	.1440	.0398	-.0061	.7567	.3261	-2.2653
1.570	1.81	10.15	4.22	2.09	.1594	.0417	-.0068	.5833	.3590	-2.0423
1.570	1.57	10.40	0.03	3.26	.1294	.0380	-.0082	.6521	.3082	-.1182
1.570	1.62	10.36	0.86	3.28	.1351	.0386	-.0076	.5949	.2928	-.3079
1.570	1.67	10.33	1.71	3.28	.1417	.0395	-.0075	.6683	.3090	-.9700
1.570	1.71	10.26	2.57	3.31	.1498	.0401	-.0084	.7333	.3142	-1.7319
1.570	1.74	10.21	4.22	3.32	.1598	.0404	-.0104	.7111	.3301	-2.1515
1.570	1.69	10.20	5.90	3.33	.1644	.0401	-.0139	.6955	.3860	-2.1374
1.570	1.62	10.24	7.59	3.31	.1644	.0396	-.0175	.8525	.4555	-2.6447
1.570	1.63	10.35	0.02	4.98	.1390	.0389	-.0085	.7559	.3338	-.5303
1.570	1.66	10.38	0.87	4.98	.1427	.0393	-.0084	.6613	.3165	-.0294
1.570	1.70	10.37	2.55	4.97	.1530	.0399	-.0098	.6324	.3033	-.3940
1.570	1.66	10.26	4.25	5.00	.1579	.0397	-.0131	.7715	.3165	-1.6893
1.570	1.60	10.25	5.90	5.00	.1595	.0395	-.0165	.6960	.3313	-1.5562
1.570	1.53	10.25	7.58	4.98	.1573	.0387	-.0192	.7423	.3901	-1.7767
1.570	1.49	10.25	7.58	7.50	.1467	.0376	-.0176	.8127	.3388	-1.7290
1.570	1.70	10.26	2.57	3.30	.1479	.0401	-.0081	.7326	.3195	-1.7326
1.570	1.61	10.25	7.59	3.31	.1628	.0396	-.0172	.8686	.4594	-2.6485
1.570	1.66	10.24	4.22	5.00	.1564	.0397	-.0127	.7666	.3133	-1.6766
1.570	1.64	10.28	1.71	2.01	.1350	.0384	-.0069	.7221	.3304	-1.6750
1.570	1.67	8.28	0.86	7.51	.1523	.0396	-.0108	.6471	.2880	-.8077
1.570	1.63	8.32	2.60	7.50	.1560	.0395	-.0142	.5586	.2722	-.4117
1.570	1.56	8.27	4.22	7.52	.1563	.0389	-.0175	.5295	.2797	-.3271
1.570	1.49	8.23	5.90	7.51	.1517	.0380	-.0190	.6009	.2786	-1.1542
1.570	1.58	5.17	0.01	2.07	.1267	.0378	-.0066	.0983	.2085	.2131
1.570	1.63	5.13	0.84	2.07	.1313	.0384	-.0057	.1841	.2214	-.5793
1.570	1.71	5.05	1.68	2.10	.1411	.0395	-.0055	.2873	.2249	-1.3758
1.570	1.77	5.04	2.52	2.11	.1479	.0403	-.0048	.2935	.2333	-1.6081
1.570	1.78	5.04	2.52	2.11	.1506	.0404	-.0053	.2931	.2376	-1.5957
1.570	1.87	5.02	4.19	2.13	.1655	.0421	-.0061	.1786	.2803	-1.3991
1.570	1.62	5.20	0.01	3.33	.1344	.0385	-.0076	.0966	.2007	.5978
1.570	1.68	5.19	0.85	3.33	.1420	.0394	-.0072	.1368	.2138	.1000
1.570	1.73	5.16	1.69	3.32	.1488	.0401	-.0072	.2177	.2154	-.6521
1.570	1.76	5.08	2.52	3.36	.1565	.0408	-.0082	.3101	.2149	-1.3947
1.570	1.76	5.10	4.20	3.36	.1662	.0412	-.0115	.2146	.2251	-1.1132
1.570	1.69	5.08	5.86	3.37	.1692	.0404	-.0155	.2704	.2890	-1.3471
1.570	1.60	5.09	7.55	3.36	.1676	.0397	-.0192	.4438	.3498	-1.9463

TABLE II.- AERODYNAMIC CHARACTERISTICS OF RETURN COMPONENT AND BOMB POD WITH MUTUAL INTERFERENCE; $\beta_P = 0^o$; $\beta_R = 0^o$ - Continued

M	α_R, deg	α_P, deg	x_a, in.	z_a, in.	$C_{L,R}$	$C_{D',R}$	$C_{m,R}$	$C_{L,P}$	$C_{D',P}$	$C_{m,P}$
1.570	1.68	5.24	0.01	4.99	.1433	.0393	-.0075	.1480	.1851	.4823
1.570	1.72	5.24	0.89	5.01	.1525	.0401	-.0087	.0803	.1880	.7696
1.570	1.73	5.22	2.52	5.00	.1592	.0403	-.0105	.2090	.2183	-.1629
1.570	1.67	5.15	4.20	5.01	.1632	.0399	-.0144	.3536	.2057	-1.2014
1.570	1.59	5.14	5.86	5.02	.1631	.0395	-.0181	.2343	.2256	-.7598
1.570	1.52	5.12	7.55	5.02	.1600	.0385	-.0207	.3021	.2839	-1.0613
1.570	1.68	5.19	0.84	7.53	.1553	.0398	-.0116	.3427	.2097	-.3650
1.570	1.62	5.21	2.52	7.52	.1566	.0394	-.0147	.2419	.2024	.0852
1.570	1.55	5.18	4.19	7.54	.1579	.0389	-.0185	.2405	.2258	-.0047
1.570	1.49	5.19	5.87	7.50	.1539	.0379	-.0199	.3718	.2269	-.9118
1.570	1.49	5.16	7.55	7.51	.1485	.0374	-.0182	.3992	.2247	-.8905
1.570	1.57	5.25	0.85	10.00	.1539	.0389	-.0164	.4287	.2364	-.5169
1.570	1.51	5.25	2.52	10.00	.1539	.0382	-.0191	.3740	.2258	-.3738
1.570	1.48	5.24	4.20	10.00	.1479	.0375	-.0182	.3812	.2152	-.4781
1.570	1.50	5.21	5.86	10.02	.1423	.0374	-.0156	.2805	.2158	-.1178
1.570	1.53	5.21	7.55	10.00	.1398	.0378	-.0133	.3472	.2323	-.5207
1.570	1.63	0.07	0.01	2.10	.1294	.0381	-.0055	-.2558	.2265	.7345
1.570	1.71	0.00	0.84	2.11	.1362	.0390	-.0038	-.1963	.2152	-.0768
1.570	1.79	-0.04	1.69	2.13	.1458	.0402	-.0031	-.1156	.2129	-.7785
1.570	1.86	-0.04	2.54	2.15	.1565	.0412	-.0037	-.1490	.2279	-.6414
1.570	1.92	-0.09	4.20	2.17	.1718	.0428	-.0059	-.1687	.2807	-.9828
1.570	1.67	0.09	0.01	3.37	.1392	.0391	-.0065	-.3574	.1920	1.3132
1.570	1.74	0.03	0.84	3.40	.1470	.0401	-.0061	-.2715	.2144	.6234
1.570	1.79	-0.01	1.70	3.41	.1559	.0408	-.0067	-.1576	.2083	-.1513
1.570	1.81	-0.05	2.54	3.42	.1639	.0415	-.0081	-.0829	.2110	-.7618
1.570	1.78	-0.05	4.24	3.43	.1723	.0415	-.0126	-.2054	.2217	-.3185
1.570	1.68	-0.05	5.87	3.42	.1722	.0406	-.0169	-.1161	.2706	-.6631
1.570	1.59	-0.03	7.55	3.40	.1712	.0400	-.0213	.0848	.3223	-1.4100
1.570	1.73	0.12	0.01	5.05	.1484	.0398	-.0068	-.3871	.1634	1.6940
1.570	1.77	0.11	0.84	5.06	.1564	.0406	-.0078	-.3417	.1859	1.3993
1.570	1.75	0.07	2.54	5.06	.1636	.0408	-.0111	-.1765	.2042	.2642
1.570	1.67	0.05	4.20	5.06	.1659	.0403	-.0157	-.1361	.1914	-.0804
1.570	1.57	0.04	5.88	5.06	.1663	.0395	-.0202	-.1803	.2115	.0084
1.570	1.49	0.06	7.55	5.03	.1613	.0382	-.0224	-.0684	.2641	-.4963
1.570	1.69	0.12	0.84	7.54	.1578	.0399	-.0121	-.0681	.1858	.3637
1.570	1.61	0.12	2.54	7.55	.1604	.0395	-.0165	-.2244	.1900	.9446
1.570	1.53	0.12	4.20	7.53	.1599	.0387	-.0202	-.1337	.2130	.3813
1.570	1.47	0.09	5.88	7.52	.1526	.0376	-.0206	.0076	.2106	-.4140
1.570	1.48	0.08	7.55	7.52	.1467	.0372	-.0182	-.0978	.2106	-.1163
1.570	1.55	0.14	0.84	10.04	.1571	.0390	-.0181	-.0239	.1973	.2749
1.570	1.49	0.13	2.54	10.03	.1548	.0380	-.0204	-.0291	.1978	.2379
1.570	1.47	0.14	4.20	10.03	.1475	.0373	-.0187	-.1074	.1826	.5670
1.570	1.50	0.17	5.88	10.01	.1419	.0373	-.0154	-.1075	.1989	.5412
1.570	1.53	0.13	7.55	10.00	.1388	.0375	-.0131	-.0050	.2076	-.1411
1.570	1.47	0.11	0.84	12.55	.1484	.0375	-.0190	.0936	.2073	-.1801
1.570	1.50	0.12	2.54	12.55	.1451	.0374	-.0166	.0429	.1969	.0902
1.570	1.53	0.13	4.20	12.53	.1394	.0376	-.0132	-.0069	.1976	.1934
1.570	1.53	0.12	5.88	12.54	.1391	.0377	-.0132	-.0118	.1903	.1048
1.570	1.54	0.12	7.55	12.54	.1403	.0377	-.0132	-.1013	.1863	.4625
1.570	1.52	0.11	0.84	15.06	.1405	.0378	-.0139	.0709	.2108	-.0200
1.570	1.53	0.14	2.54	15.03	.1394	.0377	-.0132	.0766	.2079	-.0858
1.570	1.53	0.12	4.20	15.04	.1387	.0377	-.0130	.1049	.1996	-.2473
1.570	1.54	0.12	5.87	15.05	.1392	.0380	-.0127	.0376	.1972	.0658
1.570	1.54	0.14	7.55	15.04	.1398	.0380	-.0129	.0263	.1977	.1073
1.570	1.54	0.12	5.88	15.05	.1391	.0378	-.0128	.0322	.1989	.0543
1.570	1.48	0.04	7.55	5.04	.1597	.0384	-.0221	-.0519	.2625	-.4743
1.570	1.50	0.13	5.88	10.03	.1418	.0373	-.0153	-.1179	.1912	.5300
1.570	1.92	-0.08	4.20	2.17	.1704	.0427	-.0057	-.1685	.2799	-.9549
1.570	1.74	-4.96	-0.01	3.42	.1469	.0399	-.0061	-.8003	.2887	2.1152
1.570	1.82	-5.05	0.83	3.44	.1556	.0409	-.0053	-.6792	.2986	1.2508
1.570	1.86	-5.12	1.68	3.45	.1647	.0419	-.0062	-.5711	.2866	.4271
1.570	1.88	-5.11	2.56	3.44	.1734	.0426	-.0082	-.5701	.2856	.2473
1.570	1.80	-5.12	4.19	3.48	.1794	.0418	-.0139	-.6642	.2982	.5802
1.570	1.68	-5.14	5.89	3.45	.1789	.0409	-.0193	-.4926	.3263	-.2082
1.570	1.55	-5.18	7.55	3.44	.1751	.0398	-.0240	-.2819	.3564	-1.0966
1.570	1.79	-4.97	0.00	5.11	.1564	.0407	-.0069	-.8896	.2574	2.8310
1.570	1.79	-4.96	0.00	5.10	.1574	.0409	-.0070	-.9057	.2610	2.8354
1.570	1.82	-5.01	0.83	5.11	.1638	.0414	-.0079	-.9184	.2806	2.2615
1.570	1.77	-5.07	2.51	5.12	.1714	.0412	-.0125	-.5913	.2785	.8812
1.570	1.66	-5.30	4.20	5.25	.1723	.0403	-.0183	-.6522	.2775	1.1154
1.570	1.54	-5.10	5.87	5.12	.1699	.0396	-.0226	-.6234	.2831	.8512
1.570	1.46	-5.14	7.52	5.12	.1632	.0381	-.0246	-.4671	.3237	.0540
1.570	1.70	-4.98	0.84	7.62	.1646	.0403	-.0139	-.5888	.2382	1.7129
1.570	1.60	-4.99	2.51	7.61	.1657	.0398	-.0188	-.6641	.2653	1.8492
1.570	1.50	-5.06	4.19	7.61	.1621	.0385	-.0224	-.5094	.2758	.8851
1.570	1.45	-5.03	5.87	7.58	.1538	.0374	-.0219	-.3992	.2583	.5089
1.570	1.47	-5.07	7.55	7.59	.1474	.0371	-.0186	-.4810	.2702	.6335
1.570	1.53	-4.95	0.83	10.07	.1603	.0390	-.0200	-.4478	.2429	1.0347
1.570	1.46	-4.99	2.51	10.08	.1545	.0377	-.0216	-.4640	.2444	1.0136
1.570	1.46	-4.96	4.19	10.07	.1462	.0370	-.0189	-.5873	.2501	1.5470

TABLE II.- AERODYNAMIC CHARACTERISTICS OF RETURN COMPONENT AND BOMB POD WITH MUTUAL INTERFERENCE; $\beta_P = 0^o$; $\beta_R = 0^o$ - Continued

M	α_R, deg	α_P, deg	x_a, in.	z_a, in.	$C_{L,R}$	$C'_{D,R}$	$C_{m,R}$	$C_{L,P}$	$C'_{D,P}$	$C_{m,P}$
1.570	1.51	-4.99	5.87	10.06	.1411	.0374	-.0148	-.5508	.2651	1.1657
1.570	1.53	-5.05	7.55	10.08	.1403	.0377	-.0135	-.4153	.2579	.4363
1.570	1.46	-4.95	0.83	12.54	.1490	.0373	-.0198	-.3122	.2446	.3445
1.570	1.46	-5.00	0.84	12.70	.1496	.0373	-.0197	-.3063	.2467	.3302
1.570	1.49	-4.99	2.51	12.56	.1437	.0373	-.0164	-.4357	.2499	.9421
1.570	1.53	-5.00	4.19	12.57	.1396	.0376	-.0134	-.4357	.2482	.9036
1.570	1.53	-4.97	5.87	12.55	.1386	.0375	-.0131	-.4978	.2425	1.1507
1.570	1.54	-5.01	7.55	12.57	.1389	.0378	-.0128	-.5469	.2524	1.2796
1.570	1.53	-4.98	0.84	15.07	.1403	.0378	-.0137	-.3397	.2585	.5832
1.570	1.53	-5.01	2.51	15.09	.1390	.0378	-.0132	-.3114	.2535	.3702
1.570	1.53	-5.01	4.19	15.09	.1386	.0377	-.0130	-.3460	.2436	.5075
1.570	1.54	-4.97	5.87	15.07	.1399	.0380	-.0129	-.4135	.2459	.8206
1.570	1.54	-4.97	7.55	15.08	.1405	.0381	-.0130	-.4138	.2394	.8076
1.570	1.91	-8.23	2.51	3.50	.1790	.0432	-.0086	-.9200	.3961	.7855
1.570	1.82	-8.28	4.20	3.53	.1860	.0420	-.0153	-.9915	.4038	.9579
1.570	1.79	-8.19	5.87	3.50	.1819	.0416	-.0155	-.9498	.3868	.9717
1.570	1.63	-8.22	7.55	3.50	.1817	.0405	-.0225	-.7835	.3962	.0558
1.570	1.53	-8.24	7.55	3.48	.1773	.0396	-.0259	-.5584	.4128	-1.0021
1.570	1.53	-8.24	7.55	3.48	.1782	.0396	-.0261	-.5524	.4121	-1.0027
1.570	1.67	-8.22	5.87	3.48	.1820	.0409	-.0211	-.7685	.4024	-.1011
1.570	1.82	-8.06	0.00	5.17	.1625	.0410	-.0077	-1.2061	.3673	3.2500
1.570	1.85	-8.06	0.83	5.16	.1683	.0418	-.0084	-1.1050	.3827	2.6212
1.570	1.79	-8.08	2.51	5.13	.1746	.0414	-.0132	-.8573	.3609	1.1601
1.570	1.65	-8.14	4.19	5.17	.1768	.0405	-.0202	-.9200	.3624	1.4210
1.570	1.52	-8.15	5.87	5.15	.1720	.0393	-.0245	-.8904	.3711	1.1711
1.570	1.43	-8.20	7.55	5.13	.1635	.0378	-.0259	-.7601	.4005	.2806
1.570	1.69	-10.10	0.84	7.68	.1710	.0407	-.0162	-1.2436	.4149	2.9344
1.570	1.57	-10.17	2.52	7.69	.1712	.0394	-.0220	-1.1738	.4443	2.3287
1.570	1.46	-10.19	4.19	7.66	.1652	.0382	-.0252	-.9584	.4305	1.0808
1.570	1.43	-10.19	5.88	7.65	.1556	.0371	-.0235	-1.0432	.4357	1.4875
1.570	1.46	-10.25	7.56	7.67	.1454	.0369	-.0185	-1.0287	.4448	1.2019
1.570	1.50	-10.13	0.83	10.17	.1641	.0388	-.0227	-.9508	.4001	1.6403
1.570	1.44	-10.16	2.52	10.18	.1574	.0375	-.0236	-.9848	.4010	1.7775
1.570	1.45	-10.15	4.19	10.18	.1483	.0368	-.0198	-1.1165	.4272	2.3387
1.570	1.51	-10.21	5.88	10.17	.1409	.0374	-.0146	-.9950	.4280	1.4999
1.570	1.53	-10.23	7.56	10.18	.1395	.0376	-.0135	-.9282	.4193	1.2135
1.570	1.45	-10.15	0.83	12.64	.1500	.0371	-.0207	-.8225	.3904	1.1332
1.570	1.49	-10.14	2.52	12.64	.1420	.0372	-.0160	-.9384	.4075	1.6252
1.570	1.53	-10.10	4.19	12.60	.1393	.0375	-.0133	-.9387	.4024	1.5606
1.570	1.53	-10.12	5.88	12.62	.1391	.0376	-.0134	-1.0504	.4140	2.0390
1.570	1.54	-10.14	7.55	12.63	.1394	.0379	-.0129	-1.0256	.4200	1.7513
1.570	1.53	-10.13	0.83	15.13	.1395	.0379	-.0134	-.8145	.4033	1.0804
1.570	1.53	-10.17	2.52	15.15	.1391	.0377	-.0133	-.7867	.3968	.9063
1.570	1.54	-10.13	4.19	15.15	.1403	.0379	-.0133	-.8891	.3990	1.4073
1.570	1.54	-10.17	5.88	15.17	.1400	.0381	-.0128	-.8946	.3968	1.3829
1.570	1.54	-10.15	7.55	15.16	.1398	.0380	-.0129	-.9178	.3959	1.4534
1.570	1.55	1.57	0.00	0.47	.1214	.0373	-.0061	-.0318	.2300	-.3919
1.570	1.63	1.53	0.85	0.48	.1263	.0379	-.0044	.0485	.2328	-1.0155
1.570	1.70	1.50	1.67	0.49	.1309	.0385	-.0026	.0776	.2488	-1.3700
1.570	1.58	1.58	0.00	1.16	.1264	.0377	-.0065	-.1440	.2122	.2286
1.570	1.66	1.54	0.84	1.18	.1312	.0384	-.0047	-.0638	.2149	-.4085
1.570	1.75	1.47	1.67	1.21	.1384	.0393	-.0029	.0112	.2234	-1.0699
1.570	1.83	1.46	2.52	1.22	.1488	.0406	-.0022	-.0048	.2492	-1.2454
1.570	1.55	4.63	0.00	0.47	.1214	.0374	-.0063	.2177	.2334	-.5247
1.570	1.61	4.57	0.83	0.48	.1246	.0378	-.0048	.2595	.2424	-1.1774
1.570	1.56	4.64	0.00	1.15	.1227	.0376	-.0062	.0975	.2030	-.1330
1.570	1.62	4.61	0.84	1.15	.1277	.0380	-.0052	.1659	.2129	-.7159
1.570	1.70	4.56	1.67	1.16	.1342	.0388	-.0039	.2625	.2278	-1.4731
1.570	1.79	4.56	2.52	1.17	.1464	.0402	-.0037	.2063	.2449	-1.4455
1.570	1.60	-0.43	0.01	1.15	.1292	.0378	-.0068	-.3127	.2267	.4937
1.570	1.68	-0.51	0.84	1.18	.1347	.0385	-.0047	-.2319	.2306	-.2077
1.570	1.78	-0.57	1.69	1.21	.1432	.0396	-.0029	-.1679	.2381	-.7895
1.570	1.86	-0.58	2.53	1.21	.1502	.0408	-.0013	-.1490	.2649	-1.1665
1.570	3.57	12.38	0.89	2.01	.2175	.0492	-.0279	.6842	.3267	-.6654
1.570	3.64	12.33	1.73	2.00	.2239	.0501	-.0271	.7717	.3375	-1.6120
1.570	3.72	12.23	2.56	2.04	.2327	.0518	-.0259	.7476	.3339	-2.0797
1.570	3.82	12.17	4.24	2.59	.2505	.0542	-.0273	.5816	.3531	-1.8862
1.570	3.70	12.14	7.58	3.35	.2592	.0534	-.0359	.8713	.5140	-2.9823
1.570	3.84	12.15	4.24	2.08	.2489	.0544	-.0257	.6050	.3822	-2.2515
1.570	3.77	12.19	5.92	3.34	.2589	.0538	-.0324	.6828	.4082	-2.2099
1.570	3.78	12.19	4.24	3.35	.2532	.0538	-.0301	.6797	.3354	-1.8967
1.570	3.72	12.28	2.56	3.30	.2404	.0526	-.0287	.8210	.3475	-1.7542
1.570	3.68	12.33	1.72	3.30	.2347	.0514	-.0286	.7395	.3364	-.8476
1.570	3.62	12.43	0.89	3.27	.2249	.0501	-.0282	.6649	.3170	.1600
1.570	3.72	12.42	2.56	4.97	.2430	.0526	-.0292	.7844	.3460	-.2947
1.570	3.72	12.29	4.24	5.00	.2504	.0529	-.0319	.8558	.3392	-1.6598
1.570	3.67	12.29	5.93	4.99	.2531	.0528	-.0352	.7081	.3499	-1.5466
1.570	3.59	12.22	7.59	5.03	.2541	.0521	-.0390	.7855	.4213	-2.0582
1.570	3.56	10.33	0.02	2.00	.2158	.0489	-.0280	.3627	.2356	.2828
1.570	3.61	10.28	0.87	2.01	.2211	.0497	-.0275	.4748	.2607	-.6716

TABLE II.- AERODYNAMIC CHARACTERISTICS OF RETURN COMPONENT AND BOMB POD WITH MUTUAL INTERFERENCE; $\beta_P = 0^o$; $\beta_R = 0^o$ - Continued

M	α_R, deg	α_P, deg	x_a, in.	z_a, in.	$C_{L,R}$	$C_{D',R}$	$C_{m,R}$	$C_{L,P}$	$C_{D',P}$	$C_{m,P}$
1.570	3.67	10.22	1.71	2.02	.2284	.0508	-.0268	.5731	.2708	-1.5964
1.570	3.75	10.18	2.55	2.03	.2354	.0521	-.0256	.5637	.2744	-1.9542
1.570	3.87	10.12	4.22	2.08	.2519	.0550	-.0254	.4380	.3313	-2.0400
1.570	3.70	10.16	7.59	3.33	.2612	.0536	-.0365	.7085	.4511	-2.7181
1.570	3.76	10.13	5.90	3.35	.2571	.0538	-.0325	.5009	.3452	-1.8897
1.570	3.79	10.16	4.22	3.34	.2539	.0540	-.0300	.4562	.2718	-1.4902
1.570	3.74	10.19	2.57	3.32	.2427	.0528	-.0284	.6281	.2810	-1.7408
1.570	3.70	10.27	1.71	3.29	.2351	.0516	-.0278	.5357	.2703	-.8943
1.570	3.65	10.34	0.87	3.28	.2285	.0505	-.0281	.4373	.2565	.1460
1.570	3.59	10.37	0.02	3.28	.2240	.0500	-.0290	.4286	.2552	.6874
1.570	3.65	10.37	0.02	4.96	.2303	.0510	-.0285	.5491	.2773	.2580
1.570	3.69	10.37	0.86	4.98	.2366	.0519	-.0289	.4883	.2681	.5184
1.570	3.73	10.31	2.55	4.98	.2445	.0528	-.0295	.5579	.2833	-.4495
1.570	3.72	10.22	4.25	5.00	.2507	.0530	-.0323	.6399	.2685	-1.5871
1.570	3.66	10.15	5.89	5.03	.2527	.0527	-.0355	.5090	.2797	-1.3106
1.570	3.58	10.19	7.58	4.99	.2535	.0520	-.0393	.5975	.3543	-1.7593
1.570	3.52	10.21	7.58	7.51	.2443	.0503	-.0391	.6338	.2924	-1.4063
1.570	3.72	8.28	0.86	7.50	.2458	.0526	-.0304	.5382	.2514	-.3544
1.570	3.68	8.33	2.56	7.50	.2480	.0524	-.0328	.3723	.2281	.3052
1.570	3.62	8.25	4.22	7.52	.2506	.0521	-.0366	.4158	.2526	-.1170
1.570	3.55	8.20	5.90	7.51	.2493	.0510	-.0398	.5330	.2460	-1.1468
1.570	3.62	5.15	0.01	2.07	.2198	.0496	-.0265	-.0603	.1793	.6142
1.570	3.69	5.10	0.85	2.07	.2255	.0506	-.0253	.0098	.1811	-.1471
1.570	3.75	5.03	1.68	2.10	.2326	.0519	-.0246	.1070	.1908	-.9540
1.570	3.82	5.02	2.51	2.11	.2421	.0533	-.0247	.0291	.1996	-.8308
1.570	3.94	4.96	4.19	2.14	.2592	.0560	-.0251	.0383	.2624	-1.4347
1.570	3.68	4.98	7.54	3.39	.2633	.0536	-.0382	.3173	.3562	-2.0343
1.570	3.77	5.00	5.86	3.39	.2626	.0543	-.0339	.0688	.2592	-1.0343
1.570	3.82	5.04	4.20	3.38	.2609	.0550	-.0307	-.0155	.1871	-.5119
1.570	3.80	5.00	2.52	3.39	.2506	.0538	-.0283	.1630	.1870	-1.0970
1.570	3.76	5.09	1.68	3.35	.2435	.0530	-.0277	.0985	.1904	-.4655
1.570	3.71	5.17	0.85	3.32	.2354	.0518	-.0276	.0111	.1933	.3385
1.570	3.65	5.18	0.01	3.33	.2306	.0508	-.0285	-.0842	.1700	1.0946
1.570	3.71	5.26	0.01	4.98	.2377	.0520	-.0281	-.0616	.1490	1.2683
1.570	3.74	5.22	0.85	5.00	.2425	.0528	-.0284	-.0336	.1650	.9404
1.570	3.78	5.19	2.52	5.00	.2539	.0542	-.0305	.1344	.1986	-.2321
1.570	3.73	5.12	4.20	5.02	.2577	.0535	-.0338	.1284	.1718	-.5760
1.570	3.66	5.12	5.86	5.02	.2588	.0530	-.0375	.0599	.1955	-.4814
1.570	3.57	5.09	7.55	5.02	.2572	.0520	-.0412	.1492	.2671	-.9293
1.570	3.52	5.12	7.55	7.51	.2445	.0501	-.0395	.1755	.1969	-.6020
1.570	3.53	5.14	5.86	7.51	.2497	.0508	-.0404	.2693	.1982	-.7548
1.570	3.62	5.14	4.19	7.55	.2538	.0523	-.0379	.1711	.2039	.0014
1.570	3.68	5.25	2.52	7.51	.2501	.0525	-.0336	.0541	.1688	.8407
1.570	3.73	5.21	0.85	7.53	.2475	.0528	-.0306	.1599	.1742	.4917
1.570	3.64	5.25	0.85	10.00	.2503	.0523	-.0359	.3895	.2334	-.4033
1.570	3.56	5.25	2.52	10.00	.2505	.0514	-.0393	.3132	.2132	-.1519
1.570	3.52	5.20	4.20	10.03	.2466	.0505	-.0399	.1924	.1880	.3422
1.570	3.53	5.17	5.86	10.03	.2384	.0497	-.0371	.1705	.1990	.1939
1.570	3.57	5.18	7.55	10.00	.2361	.0501	-.0343	.3059	.2117	-.6499
1.570	3.66	0.04	0.01	2.11	.2245	.0502	-.0263	-.5051	.1937	1.3663
1.570	3.75	-0.01	0.84	2.12	.2318	.0515	-.0244	-.4241	.1937	.6005
1.570	3.84	-0.04	1.70	2.12	.2415	.0532	-.0234	-.3709	.2008	-.0297
1.570	3.91	-0.09	2.54	2.16	.2509	.0548	-.0232	-.3689	.2207	-.3252
1.570	3.99	-0.15	4.20	2.17	.2658	.0570	-.0247	-.3041	.2695	-1.0997
1.570	3.66	-0.15	7.55	3.43	.2690	.0542	-.0408	-.0392	.3279	-1.5803
1.570	3.77	-0.10	5.88	3.43	.2678	.0545	-.0352	-.2969	.2572	-.4981
1.570	3.90	-0.08	4.20	3.45	.2766	.0565	-.0324	-.4601	.1995	.3403
1.570	3.90	-0.08	2.54	3.44	.2646	.0558	-.0285	-.3105	.1911	-.0465
1.570	3.84	-0.04	1.69	3.41	.2517	.0543	-.0269	-.3009	.2012	.1178
1.570	3.78	-0.01	0.84	3.41	.2435	.0529	-.0267	-.4263	.2030	.9726
1.570	3.72	0.05	0.01	3.39	.2358	.0517	-.0273	-.5459	.1794	1.8250
1.570	3.77	0.11	0.01	5.06	.2454	.0530	-.0279	-.5705	.1402	2.2811
1.570	3.80	0.08	0.84	5.06	.2510	.0538	-.0286	-.4790	.1722	1.6397
1.570	3.80	0.03	2.54	5.06	.2609	.0547	-.0316	-.2689	.1855	.2629
1.570	3.73	0.00	4.20	5.08	.2609	.0538	-.0350	-.3465	.1804	.4887
1.570	3.65	0.00	5.88	5.07	.2645	.0533	-.0399	-.3673	.1934	.3403
1.570	3.55	0.01	7.55	5.04	.2608	.0520	-.0435	-.2325	.2600	-.3492
1.570	3.51	0.00	7.55	7.55	.2452	.0499	-.0401	-.2522	.1864	.2328
1.570	3.51	0.06	5.88	7.54	.2525	.0509	-.0422	-.2146	.1826	.3378
1.570	3.60	0.07	4.20	7.55	.2569	.0524	-.0398	-.2095	.1860	.3752
1.570	3.67	0.09	2.54	7.57	.2542	.0529	-.0354	-.3963	.1636	1.5394
1.570	3.75	0.12	0.84	7.57	.2510	.0530	-.0313	-.3671	.1502	1.6613
1.570	3.62	0.13	0.84	10.03	.2531	.0524	-.0376	-.0790	.1982	.3910
1.570	3.53	0.12	2.54	10.03	.2504	.0511	-.0408	-.1231	.1818	.4802
1.570	3.53	0.13	5.88	10.01	.2398	.0498	-.0373	-.2220	.1842	.6090
1.570	3.57	0.10	7.55	10.01	.2363	.0503	-.0342	-.1423	.1865	.0880
1.570	3.57	0.11	7.55	12.54	.2338	.0501	-.0337	-.2173	.1760	.7745
1.570	3.57	0.13	5.88	12.54	.2345	.0502	-.0338	-.1962	.1722	.8588
1.570	3.56	0.12	4.20	12.53	.2351	.0501	-.0343	-.0788	.1887	.3659
1.570	3.52	0.10	2.54	12.55	.2409	.0499	-.0380	-.0286	.1964	.1988

TABLE II.- AERODYNAMIC CHARACTERISTICS OF RETURN COMPONENT AND BOMB POD WITH MUTUAL INTERFERENCE; $\beta_P = 0^o$; $\beta_R = 0^o$ - Continued

M	α_R, deg	α_P, deg	x_a, in.	z_a, in.	$C_{L,R}$	$C'_{D,R}$	$C_{m,R}$	$C_{L,P}$	$C'_{D,P}$	$C_{m,P}$
1.570	3.52	0.11	0.84	12.54	.2488	.0505	-.0408	.0385	.2039	-.1138
1.570	3.55	0.11	0.84	15.04	.2366	.0499	-.0354	.0325	.2047	-.0098
1.570	3.58	0.11	2.54	15.04	.2366	.0502	-.0340	.0327	.2036	-.0355
1.570	3.58	0.10	4.20	15.04	.2370	.0503	-.0341	.0500	.1937	-.1937
1.570	3.58	0.11	5.87	15.04	.2353	.0503	-.0335	-.0228	.1901	.1330
1.570	3.58	0.11	7.55	15.05	.2355	.0505	-.0335	-.0896	.1837	.4059
1.570	3.56	0.13	2.54	10.04	.2531	.0517	-.0409	-.1113	.1809	.5106
1.570	3.64	-5.20	7.55	3.43	.2729	.0541	-.0433	-.4440	.3708	-1.2186
1.570	3.77	-5.21	5.87	3.46	.2726	.0550	-.0372	-.6665	.3352	-.2250
1.570	3.89	-5.15	4.19	3.48	.2723	.0561	-.0316	-.8964	.2956	1.0135
1.570	3.93	-5.11	2.52	3.43	.2646	.0563	-.0270	-.8366	.2927	1.0105
1.570	3.81	-4.98	-0.01	5.10	.2510	.0539	-.0282	-1.0560	.2605	3.2215
1.570	3.84	-5.04	0.83	5.11	.2564	.0549	-.0285	-.9616	.2855	2.5178
1.570	3.83	-5.11	2.51	5.12	.2671	.0553	-.0325	-.7072	.2708	.9627
1.570	3.73	-5.09	4.19	5.12	.2689	.0546	-.0378	-.8192	.2726	1.4532
1.570	3.62	-5.14	5.87	5.13	.2678	.0534	-.0425	-.8336	.2873	1.2401
1.570	3.51	-5.18	7.52	5.12	.2634	.0517	-.0461	-.6363	.3384	.1763
1.570	3.50	-5.08	7.55	7.59	.2451	.0496	-.0406	-.7036	.2613	1.0899
1.570	3.48	-5.03	5.87	7.58	.2522	.0505	-.0435	-.7334	.2587	1.4569
1.570	3.55	-5.09	4.24	7.61	.2575	.0520	-.0421	-.6213	.2572	.9785
1.570	3.67	-4.99	2.51	7.60	.2584	.0531	-.0371	-.8314	.2560	2.2512
1.570	3.74	-4.98	0.83	7.62	.2556	.0537	-.0326	-.9308	.2361	3.0333
1.570	3.60	-4.95	0.83	10.05	.2558	.0524	-.0394	-.5471	.2490	1.2660
1.570	3.51	-4.98	2.51	10.09	.2531	.0511	-.0427	-.6833	.2432	1.9062
1.570	3.48	-4.97	4.19	10.07	.2446	.0497	-.0410	-.7709	.2580	2.1596
1.570	3.53	-5.05	5.87	10.08	.2389	.0498	-.0371	-.6285	.2562	1.1991
1.570	3.57	-5.05	7.55	10.08	.2350	.0500	-.0339	-.6554	.2610	1.2569
1.570	3.57	-4.98	7.55	12.54	.2344	.0501	-.0337	-.6355	.2513	1.4055
1.570	3.57	-4.96	5.89	12.55	.2344	.0502	-.0338	-.7053	.2447	1.9632
1.570	3.57	-4.98	4.19	12.55	.2355	.0502	-.0342	-.5256	.2391	1.1329
1.570	3.51	-4.98	2.51	12.55	.2400	.0498	-.0383	-.4911	.2517	1.0342
1.570	3.48	-4.97	0.83	12.54	.2452	.0499	-.0413	-.3560	.2464	.3819
1.570	3.56	-4.97	0.83	15.05	.2384	.0501	-.0356	-.3838	.2585	.6076
1.570	3.57	-5.01	2.51	15.07	.2343	.0500	-.0337	-.3664	.2530	.4359
1.570	3.57	-5.02	4.19	15.09	.2361	.0503	-.0340	-.3959	.2429	.5849
1.570	3.57	-5.04	5.87	15.10	.2324	.0501	-.0331	-.4852	.2446	.9676
1.570	3.57	-4.97	7.55	15.08	.2341	.0504	-.0333	-.6045	.2402	1.5383
1.570	3.86	-8.11	0.83	5.17	.2605	.0552	-.0290	-1.2531	.3951	2.9001
1.570	3.83	-8.12	2.51	5.13	.2670	.0552	-.0325	-1.0223	.3685	1.4403
1.570	3.70	-8.20	4.20	5.19	.2698	.0544	-.0391	-1.1556	.3819	1.9509
1.570	3.47	-8.31	7.56	5.17	.2632	.0513	-.0479	-.9402	.4335	.3817
1.570	3.55	-10.14	0.83	15.13	.2351	.0497	-.0347	-.8707	.4114	1.1487
1.570	3.57	-10.19	2.52	15.14	.2341	.0501	-.0337	-.8481	.4016	.9492
1.570	3.57	-10.15	4.21	15.14	.2351	.0503	-.0339	-.9565	.4054	1.5167
1.570	3.58	-10.08	5.88	15.09	.2347	.0503	-.0334	-.9805	.3970	1.5992
1.570	3.58	-10.14	7.55	15.16	.2366	.0506	-.0337	-1.1584	.4211	2.4422
1.570	3.57	-10.17	7.55	12.62	.2352	.0501	-.0338	-1.1031	.4255	1.7984
1.570	3.57	-10.12	5.88	12.63	.2353	.0501	-.0340	-1.2402	.4360	2.6819
1.570	3.57	-10.09	4.19	12.61	.2362	.0503	-.0343	-1.1247	.4140	2.2650
1.570	3.51	-10.17	2.52	12.65	.2413	.0497	-.0386	-1.0259	.4214	1.8160
1.570	3.47	-10.14	0.83	12.63	.2497	.0501	-.0432	-.8990	.4031	1.2441
1.570	3.57	-10.14	0.84	10.17	.2608	.0525	-.0423	-1.0575	.4070	1.9268
1.570	3.48	-10.15	2.52	10.19	.2554	.0509	-.0449	-1.2795	.4353	2.9845
1.570	3.47	-10.21	4.20	10.20	.2450	.0495	-.0420	-1.2429	.4413	2.6164
1.570	3.53	-10.24	5.89	10.17	.2362	.0495	-.0363	-1.1001	.4269	1.5531
1.570	3.57	-10.26	7.56	10.18	.2348	.0500	-.0340	-1.2041	.4508	2.0047
1.570	3.45	-10.23	7.56	7.66	.2471	.0495	-.0433	-1.2568	.4596	2.0172
1.570	3.55	-10.20	4.19	7.67	.2663	.0526	-.0458	-1.1128	.4373	1.6061
1.570	3.47	-10.19	5.88	7.67	.2564	.0506	-.0461	-1.3091	.4676	2.4307
1.570	3.58	3.52	0.00	0.50	.2156	.0489	-.0268	-.1053	.1987	-.1811
1.570	3.64	3.51	0.83	0.48	.2182	.0495	-.0249	-.0028	.2076	-.9774
1.570	3.72	3.45	1.67	0.51	.2243	.0504	-.0233	-.0019	.2250	-1.2340
1.570	3.85	3.42	2.52	1.21	.2397	.0532	-.0225	-.0561	.2260	-1.2834
1.570	3.76	3.44	1.67	1.21	.2315	.0517	-.0237	-.0680	.2035	-.9084
1.570	3.68	3.50	0.84	1.18	.2242	.0505	-.0251	-.1310	.1862	-.3019
1.570	3.61	3.54	-0.02	1.18	.2202	.0496	-.0272	-.2170	.1688	.5291
1.570	3.59	6.61	0.00	1.15	.2154	.0493	-.0265	.0475	.1697	.0726
1.570	3.64	6.58	0.84	1.15	.2202	.0500	-.0255	.1323	.1864	-.6682
1.570	3.72	6.54	1.68	1.16	.2283	.0511	-.0246	.1948	.2064	-1.3525
1.570	3.80	6.48	2.52	1.19	.2366	.0527	-.0238	.1550	.2302	-1.5347
1.570	3.88	1.38	2.51	1.24	.2419	.0536	-.0219	-.2070	.2450	-1.1015
1.570	3.79	1.39	1.67	1.23	.2335	.0520	-.0233	-.2250	.2148	-.7117
1.570	3.70	1.46	0.84	1.20	.2272	.0508	-.0251	-.2891	.1997	-.0539
1.570	3.62	1.52	0.00	1.18	.2226	.0499	-.0275	-.3813	.1899	.7914
1.570	5.26	12.33	0.88	2.03	.2978	.0642	-.0441	.5453	.2731	-.6021
1.570	5.32	12.27	1.73	2.02	.3038	.0655	-.0432	.6114	.2772	-1.5547
1.570	5.40	12.18	2.55	2.06	.3112	.0672	-.0420	.5302	.2719	-1.6883
1.570	5.52	12.11	4.24	2.08	.3228	.0700	-.0402	.4652	.3568	-2.2527
1.570	5.43	12.11	7.59	3.36	.3381	.0701	-.0498	.7628	.5315	-3.1343
1.570	5.47	12.13	5.92	3.35	.3340	.0701	-.0464	.5175	.3709	-2.1773

TABLE II.- AERODYNAMIC CHARACTERISTICS OF RETURN COMPONENT AND BOMB POD WITH MUTUAL INTERFERENCE; $\beta_P = 0^o$; $\beta_R = 0^o$ - Continued

M	α_R, deg	α_P, deg	x_a, in.	z_a, in.	$C_{L,R}$	$C'_{D,R}$	$C_{m,R}$	$C_{L,P}$	$C'_{D,P}$	$C_{m,P}$
1.570	5.46	12.15	4.24	3.36	.3282	.0696	-.0452	.4345	.2654	-1.3795
1.570	5.39	12.23	2.56	3.31	.3178	.0678	-.0446	.6870	.2939	-1.7035
1.570	5.35	12.28	1.72	3.31	.3114	.0664	-.0445	.6314	.2927	-.8805
1.570	5.28	12.38	0.88	3.29	.3030	.0650	-.0448	.5630	.2898	.3030
1.570	5.38	12.38	2.56	4.98	.3203	.0679	-.0460	.7273	.3256	-.4711
1.570	5.39	12.25	4.24	5.01	.3268	.0686	-.0480	.6695	.2824	-1.3251
1.570	5.35	12.21	5.92	5.02	.3303	.0685	-.0507	.5285	.2928	-1.3414
1.570	5.29	12.16	7.58	5.05	.3340	.0683	-.0549	.5976	.3764	-1.8886
1.570	5.18	10.18	7.57	7.52	.3238	.0660	-.0564	.4411	.2387	-.9437
1.570	5.28	10.14	7.58	5.01	.3332	.0682	-.0552	.4290	.3291	-1.6357
1.570	5.34	10.14	5.90	5.03	.3294	.0684	-.0510	.3425	.2373	-1.0838
1.570	5.38	10.17	4.22	5.02	.3263	.0683	-.0480	.4394	.2227	-1.1342
1.570	5.39	10.28	2.55	4.98	.3207	.0680	-.0459	.5161	.2680	-.6315
1.570	5.34	10.34	0.86	4.99	.3123	.0667	-.0452	.3706	.2352	.6769
1.570	5.31	10.38	0.02	4.96	.3077	.0657	-.0449	.3868	.2325	.8267
1.570	5.25	10.39	0.03	3.26	.2997	.0644	-.0455	.2759	.2250	1.0223
1.570	5.30	10.31	0.86	3.29	.3039	.0653	-.0444	.3570	.2346	.1683
1.570	5.36	10.22	1.71	3.30	.3101	.0667	-.0437	.4372	.2260	-.9149
1.570	5.41	10.18	2.57	3.32	.3181	.0682	-.0439	.4891	.2372	-1.5823
1.570	5.47	10.12	4.22	3.35	.3304	.0702	-.0451	.2501	.2304	-1.0975
1.570	5.47	10.09	5.90	3.36	.3341	.0701	-.0466	.3311	.3281	-1.8147
1.570	5.41	10.12	7.58	3.33	.3367	.0698	-.0500	.6213	.4782	-2.9364
1.570	5.55	10.11	4.23	2.06	.3250	.0701	-.0399	.2953	.2862	-2.0086
1.570	5.43	10.14	2.55	2.05	.3137	.0678	-.0417	.3152	.2169	-1.3591
1.570	5.35	10.16	1.70	2.04	.3050	.0659	-.0424	.4128	.2277	-1.3974
1.570	5.29	10.26	0.87	2.01	.2998	.0648	-.0433	.3315	.2177	-.5426
1.570	5.24	10.30	0.02	2.01	.2948	.0637	-.0440	.2290	.1998	.4590
1.570	5.38	8.27	0.86	7.53	.3192	.0677	-.0458	.3093	.1945	.7080
1.570	5.36	8.30	2.56	7.52	.3233	.0678	-.0480	.2156	.1887	.8238
1.570	5.30	8.23	4.22	7.51	.3254	.0675	-.0515	.3667	.2203	-.2824
1.570	5.22	8.19	5.90	7.52	.3259	.0667	-.0555	.3328	.1982	-.5041
1.570	5.29	5.11	0.01	2.09	.2969	.0645	-.0426	-.2125	.1447	.9762
1.570	5.36	5.05	0.84	2.10	.3032	.0657	-.0413	-.1479	.1475	.2025
1.570	5.44	4.96	1.68	2.14	.3108	.0672	-.0403	-.1065	.1571	-.3857
1.570	5.50	4.97	2.51	2.13	.3179	.0689	-.0399	-.1392	.1725	-.6081
1.570	5.62	4.93	4.19	2.14	.3337	.0721	-.0395	-.1080	.2389	-1.3367
1.570	5.41	4.97	7.55	3.38	.3427	.0707	-.0522	.2295	.3826	-2.2242
1.570	5.49	4.95	5.86	3.41	.3405	.0708	-.0477	-.0501	.2510	-1.1209
1.570	5.51	5.00	4.19	3.39	.3350	.0712	-.0449	-.1952	.1560	-.2215
1.570	5.48	5.01	2.52	3.39	.3272	.0696	-.0437	-.0286	.1495	-.4964
1.570	5.43	5.09	1.68	3.34	.3189	.0684	-.0433	-.0044	.1693	-.3364
1.570	5.37	5.16	0.85	3.31	.3103	.0668	-.0434	-.1083	.1690	.5377
1.570	5.31	5.16	0.01	3.34	.3055	.0655	-.0443	-.2100	.1505	1.3345
1.570	5.36	5.23	0.02	5.00	.3137	.0671	-.0446	-.1980	.1153	1.6793
1.570	5.39	5.17	0.84	5.02	.3193	.0681	-.0451	-.1255	.1444	1.0432
1.570	5.42	5.15	2.52	5.00	.3291	.0696	-.0470	.0550	.1702	-.2369
1.570	5.39	5.10	4.20	5.03	.3326	.0691	-.0495	-.0749	.1431	-.0225
1.570	5.34	5.06	5.86	5.04	.3360	.0690	-.0531	-.1144	.1674	-.1791
1.570	5.25	5.02	7.54	5.04	.3356	.0681	-.0572	.0356	.2601	-.9779
1.570	5.17	5.10	7.55	7.53	.3238	.0656	-.0570	-.0211	.1554	-.0497
1.570	5.21	5.14	5.86	7.53	.3291	.0668	-.0566	.0434	.1593	.0997
1.570	5.30	5.15	4.20	7.53	.3298	.0680	-.0527	.1090	.1719	-.0717
1.570	5.36	5.20	2.52	7.53	.3258	.0681	-.0486	-.0500	.1536	1.0748
1.570	5.39	5.22	0.85	7.54	.3220	.0681	-.0460	-.0449	.1406	1.3557
1.570	5.32	5.25	0.85	10.00	.3257	.0678	-.0506	.3579	.2224	-.3310
1.570	5.18	5.22	4.20	10.03	.3246	.0660	-.0564	.0384	.1623	.8592
1.570	5.18	5.17	5.86	10.02	.3191	.0652	-.0547	.1348	.1803	.0759
1.570	5.22	5.11	7.54	10.04	.3153	.0653	-.0516	.1703	.1786	-.2929
1.570	5.24	0.12	7.55	15.06	.3120	.0652	-.0497	-.2415	.1728	1.1034
1.570	5.24	0.11	5.88	15.05	.3123	.0652	-.0498	-.0619	.1858	.2726
1.570	5.24	0.10	4.20	15.04	.3129	.0654	-.0502	.0222	.2021	-.1091
1.570	5.23	0.11	2.54	15.04	.3127	.0653	-.0502	.0106	.2112	.0223
1.570	5.20	0.09	0.84	15.06	.3168	.0653	-.0531	.0217	.2056	-.0063
1.570	5.18	0.11	0.84	12.54	.3253	.0661	-.0569	.0109	.1981	-.0546
1.570	5.18	0.10	2.54	12.55	.3205	.0654	-.0556	-.0564	.1846	.2839
1.570	5.21	0.11	4.20	12.55	.3141	.0651	-.0517	-.1906	.1635	.8453
1.570	5.24	0.13	5.88	12.55	.3142	.0653	-.0504	-.3301	.1690	1.3814
1.570	5.24	0.09	7.55	12.55	.3140	.0654	-.0504	-.2497	.1702	.7188
1.570	5.23	0.10	7.55	10.02	.3139	.0654	-.0509	-.3262	.1742	.7394
1.570	5.18	0.08	5.88	10.03	.3191	.0652	-.0548	-.2541	.1686	.5407
1.570	5.17	0.16	4.20	10.03	.3258	.0660	-.0576	-.3851	.1607	1.4845
1.570	5.22	0.15	2.54	10.05	.3297	.0671	-.0565	-.3417	.1586	1.5245
1.570	5.31	0.13	0.84	10.04	.3282	.0679	-.0520	-.1347	.1829	.5984
1.570	5.42	0.16	0.84	7.56	.3265	.0687	-.0466	-.5542	.1430	2.4642
1.570	5.37	0.13	2.54	7.54	.3297	.0687	-.0499	-.4734	.1554	1.6999
1.570	5.29	0.07	4.20	7.55	.3333	.0683	-.0547	-.3017	.1663	.5510
1.570	5.19	0.08	5.88	7.55	.3304	.0667	-.0584	-.4589	.1715	1.2337
1.570	5.16	0.04	7.55	7.54	.3239	.0654	-.0577	-.4573	.1821	.8887
1.570	5.22	-0.04	7.55	5.05	.3387	.0682	-.0596	-.3355	.2734	-.3853
1.570	5.32	-0.03	5.88	5.07	.3367	.0690	-.0545	-.5380	.1829	.7184

TABLE II.- AERODYNAMIC CHARACTERISTICS OF RETURN COMPONENT AND BOMB POD WITH MUTUAL INTERFERENCE; $\beta_P = 0^o$; $\beta_R = 0^o$ - Continued

M	α_R, deg	α_P, deg	x_a, in.	z_a, in.	$C_{L,R}$	$C_{D',R}$	$C_{m,R}$	$C_{L,P}$	$C_{D',P}$	$C_{m,P}$
1.570	5.39	0.01	4.20	5.07	.3338	.0690	-.0501	-.5066	.1660	.9024
1.570	5.45	-0.02	2.54	5.07	.3321	.0698	-.0468	-.3504	.1790	.2845
1.570	5.43	0.08	0.84	5.05	.3220	.0685	-.0445	-.5663	.1704	1.7759
1.570	5.40	0.10	0.01	5.06	.3161	.0675	-.0439	-.6687	.1320	2.5203
1.570	5.36	0.06	0.01	3.38	.3081	.0661	-.0428	-.6838	.1748	2.1930
1.570	5.43	0.01	0.84	3.39	.3135	.0676	-.0414	-.5471	.1822	1.2340
1.570	5.50	-0.04	1.70	3.40	.3227	.0694	-.0416	-.4499	.1910	.5032
1.570	5.53	-0.07	2.53	3.43	.3289	.0707	-.0419	-.5268	.1886	.6516
1.570	5.56	-0.09	4.20	3.44	.3398	.0721	-.0445	-.6081	.2043	.5582
1.570	5.50	-0.14	5.87	3.43	.3433	.0717	-.0482	-.4272	.2524	-.5147
1.570	5.38	-0.17	7.55	3.43	.3450	.0708	-.0541	-.1253	.3595	-1.7479
1.570	5.67	-0.20	4.20	2.18	.3373	.0728	-.0384	-.4350	.2589	-1.0386
1.570	5.58	-0.13	2.54	2.16	.3245	.0702	-.0383	-.4948	.2171	-.2024
1.570	5.51	-0.09	1.70	2.15	.3173	.0686	-.0393	-.5417	.2017	.3613
1.570	5.41	-0.03	0.84	2.14	.3109	.0668	-.0414	-.6064	.1929	1.0966
1.570	5.32	0.03	0.01	2.12	.3049	.0654	-.0439	-.7105	.1849	2.0090
1.570	5.60	-5.15	2.52	3.46	.3395	.0727	-.0422	-1.0249	.3086	1.5348
1.570	5.60	-5.21	4.19	3.50	.3489	.0733	-.0455	-1.0321	.3216	1.1149
1.570	5.49	-5.27	5.87	3.47	.3506	.0720	-.0510	-.7564	.3635	-.4320
1.570	5.35	-5.31	7.55	3.47	.3505	.0709	-.0573	-.6329	.4133	-.9760
1.570	5.17	-5.19	7.52	5.11	.3413	.0679	-.0625	-.7505	.3445	.1940
1.570	5.30	-5.14	5.87	5.13	.3444	.0695	-.0576	-.9781	.2786	1.5088
1.570	5.39	-5.10	4.19	5.12	.3398	.0697	-.0523	-1.0213	.2604	2.0963
1.570	5.48	-5.09	2.51	5.11	.3382	.0707	-.0473	-.8357	.2656	1.3169
1.570	5.48	-5.05	0.84	5.11	.3285	.0697	-.0443	-1.0503	.2946	2.7217
1.570	5.43	-4.98	0.00	5.10	.3228	.0686	-.0444	-1.1459	.2586	3.4766
1.570	5.37	-5.02	2.51	7.62	.3362	.0694	-.0519	-.9152	.2572	2.4924
1.570	5.25	-5.06	4.19	7.61	.3358	.0682	-.0570	-.8348	.2504	1.8420
1.570	5.15	-5.09	5.88	7.64	.3325	.0665	-.0605	-.9845	.2710	2.4467
1.570	5.14	-5.11	7.55	7.62	.3240	.0650	-.0585	-.9360	.2894	1.9342
1.570	5.22	-5.01	7.55	10.06	.3112	.0648	-.0503	-.8012	.2618	1.7322
1.570	5.17	-5.03	5.87	10.07	.3169	.0648	-.0547	-.6844	.2467	1.2519
1.570	5.14	-5.00	4.17	10.09	.3250	.0654	-.0585	-.8216	.2508	2.2883
1.570	5.19	-4.96	2.51	10.10	.3309	.0670	-.0584	-.8697	.2376	2.7756
1.570	5.29	-4.95	0.84	10.06	.3321	.0683	-.0539	-.6107	.2325	1.5016
1.570	5.23	-4.99	7.55	12.55	.3115	.0650	-.0501	-.6634	.2458	1.3875
1.570	5.23	-5.01	5.87	12.58	.3112	.0651	-.0500	-.7781	.2508	2.2273
1.570	5.21	-4.95	4.19	12.55	.3118	.0651	-.0511	-.7287	.2423	2.1620
1.570	5.16	-4.98	2.51	12.55	.3213	.0652	-.0563	-.5193	.2536	1.1702
1.570	5.15	-4.97	0.83	12.54	.3255	.0658	-.0582	-.3723	.2540	.4123
1.570	5.19	-5.00	0.83	15.07	.3132	.0648	-.0525	-.3993	.2694	.6250
1.570	5.23	-5.03	2.51	15.09	.3116	.0652	-.0499	-.3828	.2578	.4919
1.570	5.24	-5.02	4.19	15.09	.3129	.0653	-.0502	-.4236	.2439	.6947
1.570	5.23	-5.01	5.87	15.09	.3107	.0650	-.0496	-.5644	.2377	1.3213
1.570	5.24	-4.95	7.55	15.08	.3126	.0656	-.0498	-.7332	.2436	2.1483
1.570	5.28	-5.07	4.20	7.64	.3388	.0690	-.0573	-.8091	.2545	1.8685
1.570	5.14	-8.31	7.55	5.16	.3446	.0679	-.0650	-1.0680	.4510	.4402
1.570	5.27	-8.24	5.87	5.18	.3470	.0694	-.0600	-1.2976	.4044	1.8186
1.570	5.39	-8.19	4.20	5.18	.3448	.0702	-.0539	-1.3762	.3905	2.6590
1.570	5.49	-8.13	2.51	5.14	.3414	.0710	-.0478	-1.2025	.3898	1.9985
1.570	5.24	-10.11	7.55	15.16	.3116	.0655	-.0496	-1.2407	.4340	2.7964
1.570	5.25	-10.12	5.89	15.16	.3129	.0654	-.0498	-1.1697	.4173	2.5584
1.570	5.23	-10.13	4.19	15.14	.3125	.0652	-.0503	-.9814	.4159	1.6115
1.570	5.23	-10.19	2.52	15.15	.3122	.0651	-.0502	-.8622	.4116	1.0165
1.570	5.20	-10.16	0.84	15.14	.3142	.0650	-.0524	-.8842	.4176	1.2144
1.570	5.13	-10.14	0.83	12.63	.3282	.0658	-.0601	-.9266	.4009	1.3399
1.570	5.15	-10.17	2.52	12.66	.3195	.0648	-.0562	-1.0749	.4027	2.0456
1.570	5.22	-10.06	4.19	12.61	.3129	.0652	-.0509	-1.3093	.4325	3.1973
1.570	5.23	-10.10	5.88	12.61	.3106	.0648	-.0499	-1.2658	.4418	2.7251
1.570	5.23	-10.15	7.55	12.62	.3106	.0649	-.0500	-1.1650	.4210	1.9676
1.570	5.23	-10.28	7.56	10.21	.3128	.0653	-.0505	-1.3377	.4596	2.4374
1.570	5.17	-10.24	5.89	10.18	.3171	.0649	-.0547	-1.2073	.4316	1.9920
1.570	5.12	-10.20	4.20	10.20	.3265	.0654	-.0601	-1.2902	.4561	2.7315
1.570	5.28	-10.09	0.83	10.16	.3380	.0687	-.0570	-1.2090	.4150	2.6849
1.570	5.32	-10.19	2.52	7.70	.3391	.0694	-.0550	-1.3956	.4604	2.9120
1.570	5.22	-10.17	4.20	7.68	.3417	.0683	-.0607	-1.4687	.4602	3.0978
1.570	5.12	-10.20	5.89	7.68	.3348	.0663	-.0631	-1.5759	.4979	3.3602
1.570	5.12	-10.27	7.56	7.68	.3226	.0647	-.0590	-1.4956	.5064	2.5301
1.570	5.50	-10.07	0.84	7.70	.3424	.0709	-.0488	-1.5736	.4699	4.4130
1.570	5.18	-10.12	2.52	10.21	.3368	.0674	-.0613	-1.4201	.4528	3.7162
1.570	5.51	3.39	2.51	1.22	.3117	.0678	-.0374	-.2101	.2181	-1.0389
1.570	5.42	3.37	1.67	1.23	.3046	.0663	-.0389	-.1994	.1933	-.7596
1.570	5.34	3.47	0.84	1.19	.2984	.0650	-.0407	-.2516	.1731	-.1294
1.570	5.27	3.55	-0.01	1.17	.2968	.0642	-.0435	-.3609	.1577	.8753
1.570	5.26	5.59	0.00	1.16	.2941	.0640	-.0431	-.1963	.1473	.6123
1.570	5.31	5.52	0.83	1.16	.2946	.0644	-.0406	-.0820	.1612	-.3678
1.570	5.40	5.45	1.68	1.19	.3017	.0659	-.0391	-.0414	.1781	-.9697
1.570	5.47	5.43	2.51	1.20	.3079	.0672	-.0379	-.0472	.2031	-1.2904
1.570	5.36	5.49	1.68	0.49	.2978	.0649	-.0394	-.0217	.2085	-1.1169
1.570	5.29	5.51	0.83	0.48	.2923	.0638	-.0408	.0061	.1953	-.9829

TABLE II.- AERODYNAMIC CHARACTERISTICS OF RETURN COMPONENT AND BOMB POD WITH MUTUAL INTERFERENCE; $\beta_P = 0^o$; $\beta_R = 0^o$ - Continued

M	α_R, deg	α_P, deg	x_a, in.	z_a, in.	$C_{L,R}$	$C'_{D,R}$	$C_{m,R}$	$C_{L,P}$	$C'_{D,P}$	$C_{m,P}$
1.570	5.23	5.54	0.00	0.49	.2911	.0634	-.0433	-.0965	.1776	-.0947
1.570	5.29	8.64	0.86	1.11	.2933	.0642	-.0411	.1790	.1901	-.7728
1.570	5.37	8.55	1.69	1.15	.3010	.0654	-.0402	.2143	.2027	-1.3861
1.570	5.42	8.51	2.55	1.17	.3065	.0667	-.0394	.1745	.2213	-1.6077
1.570	5.25	8.68	0.01	1.12	.2918	.0636	-.0427	.0806	.1802	.1909
1.770	-0.27	12.69	0.89	2.02	.0398	.0321	.0080	.9246	.4048	-.3964
1.770	-0.23	12.68	1.74	2.02	.0472	.0325	.0079	.8784	.4015	-.5202
1.770	-0.19	12.59	2.56	2.04	.0542	.0328	.0072	.8871	.4084	-1.0529
1.770	-0.17	12.51	4.25	2.05	.0655	.0326	.0046	.9780	.4368	-2.4401
1.770	-0.30	12.51	7.59	3.33	.0634	.0316	-.0009	1.0055	.5126	-1.8248
1.770	-0.26	12.50	5.92	3.33	.0625	.0318	.0010	1.0521	.4695	-2.0388
1.770	-0.22	12.58	4.25	3.32	.0620	.0321	.0031	.9840	.4290	-1.2010
1.770	-0.19	12.66	2.56	3.30	.0587	.0325	.0058	.8628	.3832	-.1319
1.770	-0.21	12.67	1.72	3.31	.0526	.0325	.0071	.8915	.3848	.0374
1.770	-0.24	12.69	0.89	3.29	.0462	.0324	.0076	1.0036	.4195	-.1571
1.770	-0.23	12.73	2.56	4.97	.0583	.0321	.0038	1.0788	.4559	-.2190
1.770	-0.28	12.63	4.24	5.00	.0595	.0317	.0011	.9635	.4196	-.4049
1.770	-0.32	12.63	5.93	4.98	.0594	.0315	-.0008	1.0497	.4535	-1.2055
1.770	-0.35	12.55	7.59	5.00	.0560	.0312	-.0013	1.1187	.4868	-1.9749
1.770	-0.29	10.59	0.03	2.01	.0383	.0318	.0074	.6998	.3163	-.3188
1.770	-0.25	10.60	0.87	2.00	.0439	.0322	.0080	.6133	.3033	-.2274
1.770	-0.20	10.55	1.71	2.03	.0505	.0328	.0080	.6016	.3094	-.4559
1.770	-0.17	10.49	2.55	2.06	.0586	.0331	.0069	.6549	.3278	-1.0426
1.770	-0.16	10.39	4.22	2.08	.0682	.0326	.0041	.7809	.3612	-2.3565
1.770	-0.31	10.49	7.58	3.31	.0635	.0316	-.0015	.7759	.4281	-1.6372
1.770	-0.27	10.43	5.90	3.33	.0647	.0318	.0001	.8184	.3738	-2.0550
1.770	-0.23	10.49	4.22	3.32	.0623	.0322	.0028	.7312	.3393	-1.2664
1.770	-0.19	10.54	2.57	3.33	.0601	.0325	.0054	.5905	.2977	-.1660
1.770	-0.19	10.59	1.71	3.30	.0556	.0326	.0067	.6016	.2916	.1310
1.770	-0.22	10.64	0.87	3.27	.0506	.0325	.0071	.6967	.3208	.0229
1.770	-0.26	10.59	0.02	3.29	.0442	.0323	.0073	.8037	.3620	-.3611
1.770	-0.19	10.57	0.02	4.99	.0543	.0323	.0072	.7974	.3637	-.3454
1.770	-0.19	10.59	0.86	4.98	.0566	.0323	.0063	.8090	.3659	-.4030
1.770	-0.23	10.65	2.55	4.96	.0614	.0320	.0030	.7447	.3484	.0095
1.770	-0.33	10.49	5.90	5.00	.0601	.0315	-.0014	.7804	.3575	-1.1986
1.770	-0.35	10.47	7.58	4.97	.0578	.0311	-.0020	.8731	.3908	-1.9463
1.770	-0.34	10.53	7.58	7.50	.0495	.0312	.0015	.7785	.3509	-.7344
1.770	-0.28	10.55	4.22	5.00	.0630	.0317	.0001	.6923	.3286	-.3570
1.770	-0.28	8.49	0.86	7.51	.0623	.0317	.0003	.6667	.3102	-.6214
1.770	-0.33	8.51	2.56	7.50	.0604	.0315	-.0016	.6442	.3022	-.5881
1.770	-0.35	8.46	4.22	7.51	.0575	.0310	-.0019	.6215	.3010	-.6501
1.770	-0.36	8.48	5.90	7.51	.0533	.0311	-.0006	.5683	.2889	-.2949
1.770	-0.25	5.39	0.01	2.08	.0428	.0321	.0083	.1285	.1979	.3566
1.770	-0.14	5.30	1.68	2.12	.0581	.0333	.0087	.1434	.2125	-.3969
1.770	-0.19	5.34	0.84	2.11	.0494	.0327	.0089	.0833	.1923	.2190
1.770	-0.11	5.28	2.52	2.12	.0667	.0335	.0072	.2330	.2294	-1.0343
1.770	-0.14	5.24	4.19	2.12	.0740	.0328	.0033	.3647	.2480	-1.8872
1.770	-0.33	5.28	7.54	3.37	.0645	.0315	-.0028	.3149	.2931	-1.0579
1.770	-0.27	5.31	5.86	3.35	.0688	.0318	-.0016	.3318	.2482	-1.3193
1.770	-0.22	5.30	4.20	3.36	.0688	.0321	.0010	.3324	.2377	-1.2913
1.770	-0.16	5.31	2.52	3.40	.0668	.0326	.0045	.1241	.2046	.0307
1.770	-0.16	5.41	1.69	3.35	.0623	.0329	.0062	.0752	.1925	.5474
1.770	-0.17	5.45	0.85	3.32	.0568	.0328	.0075	.1040	.1932	.5667
1.770	-0.20	5.39	0.02	3.34	.0504	.0325	.0081	.1923	.2081	.1756
1.770	-0.17	5.43	0.02	5.00	.0589	.0326	.0067	.2679	.2199	-.0353
1.770	-0.18	5.40	0.85	5.02	.0617	.0325	.0052	.2511	.2146	-.0443
1.770	-0.23	5.47	2.52	4.99	.0650	.0321	.0016	.1669	.2123	.4268
1.770	-0.29	5.41	4.20	5.01	.0650	.0317	-.0014	.2037	.2227	-.0455
1.770	-0.33	5.34	5.87	5.01	.0635	.0312	-.0029	.3545	.2350	-1.1465
1.770	-0.37	5.34	7.55	5.00	.0571	.0309	-.0026	.4130	.2490	-1.4208
1.770	-0.33	5.38	7.55	7.51	.0497	.0312	.0017	.2864	.2301	-.4076
1.770	-0.35	5.41	5.86	7.51	.0542	.0310	-.0008	.2670	.2285	-.0760
1.770	-0.36	5.38	4.20	7.53	.0580	.0309	-.0024	.3328	.2291	-.3790
1.770	-0.34	5.40	2.52	7.52	.0621	.0313	-.0025	.3382	.2295	-.3125
1.770	-0.29	5.39	0.84	7.54	.0642	.0318	-.0008	.3553	.2322	-.3170
1.770	-0.36	5.44	0.85	10.00	.0566	.0310	-.0017	.4659	.2521	-.7138
1.770	-0.35	5.42	2.52	10.01	.0539	.0310	-.0005	.4554	.2429	-.6974
1.770	-0.33	5.41	4.20	10.02	.0496	.0312	.0018	.3731	.2340	-.3898
1.770	-0.33	5.37	5.86	10.03	.0482	.0312	.0023	.3622	.2294	-.4139
1.770	-0.33	5.40	7.55	10.02	.0483	.0312	.0025	.3564	.2287	-.4261
1.770	-0.23	5.45	2.52	5.01	.0650	.0322	.0016	.1614	.2085	.4419
1.770	-0.19	0.28	0.01	2.13	.0490	.0326	.0092	-.3432	.2014	1.1105
1.770	-0.12	0.24	0.84	2.14	.0577	.0333	.0094	-.3117	.2098	.6534
1.770	-0.08	0.20	1.65	2.15	.0662	.0337	.0090	-.2265	.2222	-.0495
1.770	-0.06	0.16	2.54	2.16	.0745	.0337	.0070	-.1237	.2266	-.7708
1.770	-0.12	0.16	4.20	2.14	.0790	.0330	.0024	-.0099	.2337	-1.3857
1.770	-0.35	0.18	7.55	3.40	.0674	.0315	-.0048	-.0373	.2730	-.6981
1.770	-0.29	0.18	5.88	3.41	.0726	.0318	-.0036	-.1019	.2278	-.4769
1.770	-0.22	0.16	4.20	3.41	.0738	.0323	-.0006	-.0181	.2152	-.9616
1.770	-0.15	0.19	2.54	3.43	.0725	.0328	.0034	-.2164	.2128	.2477

TABLE II.- AERODYNAMIC CHARACTERISTICS OF RETURN COMPONENT AND BOMB POD WITH MUTUAL INTERFERENCE; $\beta_P = 0^o$; $\beta_R = 0^o$ - Continued

M	α_R, deg	α_P, deg	x_a, in.	z_a, in.	$C_{L,R}$	$C_{D',R}$	$C_{m,R}$	$C_{L,P}$	$C_{D',P}$	$C_{m,P}$
1.770	-0.12	0.24	1.70	3.42	.0704	.0330	.0056	-.3186	.1990	.8872
1.770	-0.11	0.26	0.84	3.41	.0652	.0331	.0075	-.3791	.1840	1.3252
1.770	-0.13	0.27	0.01	3.40	.0584	.0332	.0098	-.3141	.1802	1.1035
1.770	-0.14	0.31	0.01	5.05	.0660	.0330	.0059	-.1840	.1692	.6336
1.770	-0.16	0.31	0.84	5.05	.0688	.0326	.0038	-.2496	.1723	.9498
1.770	-0.23	0.31	2.54	5.06	.0702	.0322	-.0002	-.2911	.1935	1.0967
1.770	-0.31	0.30	4.20	5.03	.0688	.0316	-.0033	-.1293	.2224	.1284
1.770	-0.37	0.25	5.88	5.02	.0626	.0311	-.0042	.0454	.2116	-.9930
1.770	-0.39	0.27	7.55	5.02	.0568	.0307	-.0035	-.0384	.2233	-.5356
1.770	-0.33	0.24	7.55	7.54	.0491	.0311	.0019	-.0400	.2195	-.2491
1.770	-0.36	0.31	5.88	7.52	.0530	.0309	-.0008	-.1482	.2032	.3921
1.770	-0.38	0.30	4.20	7.54	.0578	.0308	-.0032	-.1364	.1919	.3889
1.770	-0.36	0.32	2.54	7.52	.0619	.0312	-.0036	-.0834	.1948	.2251
1.770	-0.31	0.33	0.84	7.53	.0655	.0317	-.0022	-.0782	.2008	.3054
1.770	-0.37	0.32	0.84	10.03	.0564	.0308	-.0025	.0463	.2054	-.1769
1.770	-0.36	0.32	2.54	10.03	.0519	.0309	-.0003	-.0248	.1984	.1278
1.770	-0.33	0.35	4.20	10.01	.0480	.0311	.0022	-.0544	.2001	.2038
1.770	-0.34	0.32	5.88	10.03	.0470	.0311	.0024	-.0659	.1927	.1933
1.770	-0.33	0.34	7.55	10.02	.0473	.0311	.0027	-.1072	.1903	.3269
1.770	-0.33	0.31	7.55	12.55	.0465	.0314	.0030	-.0426	.2014	.1736
1.770	-0.33	0.30	5.88	12.56	.0477	.0314	.0028	-.0250	.1990	.1416
1.770	-0.33	0.29	4.20	12.55	.0477	.0312	.0026	.0464	.2031	-.1769
1.770	-0.34	0.28	2.54	12.56	.0470	.0312	.0025	.0343	.2056	-.0785
1.770	-0.33	0.30	0.84	12.55	.0487	.0312	.0022	.0341	.2029	-.0648
1.770	-0.33	0.28	0.84	15.06	.0473	.0313	.0027	.0760	.2053	-.2802
1.770	-0.33	0.28	2.54	15.06	.0466	.0314	.0029	.0702	.2066	-.2651
1.770	-0.32	0.31	4.20	15.05	.0487	.0314	.0026	.0341	.2042	-.0648
1.770	-0.33	0.30	5.87	15.05	.0473	.0314	.0028	.0283	.2047	-.0631
1.770	-0.32	0.30	7.55	15.06	.0480	.0314	.0027	.0524	.2005	-.2059
1.770	-0.36	0.20	5.87	5.04	.0633	.0312	-.0043	.0456	.2103	-.9942
1.770	-0.29	0.18	5.87	3.41	.0716	.0319	-.0033	-.1080	.2395	-.4765
1.770	-0.15	0.20	2.53	3.43	.0716	.0327	.0036	-.2109	.2177	.2457
1.770	-0.12	-4.83	0.00	2.18	.0577	.0333	.0099	-.8139	.2982	1.7336
1.770	-0.04	-4.91	0.83	2.21	.0687	.0341	.0102	-.7335	.3091	1.0735
1.770	0.00	-4.94	1.68	2.21	.0778	.0343	.0088	-.6422	.3077	.3953
1.770	0.00	-4.97	2.51	2.22	.0854	.0342	.0063	-.5701	.2944	-.1685
1.770	-0.10	-5.01	4.19	2.22	.0876	.0331	.0007	-.4489	.2979	-.9536
1.770	-0.38	-4.94	7.55	3.43	.0702	.0312	-.0071	-.4026	.3215	-.5114
1.770	-0.30	-4.92	5.87	3.43	.0782	.0319	-.0062	-.5007	.2904	-.0777
1.770	-0.22	-4.91	4.19	3.45	.0805	.0323	-.0030	-.4244	.2727	-.4522
1.770	-0.12	-4.88	2.52	3.44	.0811	.0328	.0017	-.5912	.2932	.5319
1.770	-0.08	-4.85	1.68	3.44	.0798	.0335	.0044	-.7172	.2953	1.2586
1.770	-0.06	-4.78	0.84	3.43	.0749	.0337	.0068	-.8268	.2827	1.8992
1.770	-0.08	-4.76	-0.01	3.44	.0687	.0336	.0081	-.8763	.2749	2.3320
1.770	-0.11	-4.79	-0.01	5.10	.0721	.0332	.0052	-.6955	.2374	1.6989
1.770	-0.16	-4.80	0.83	5.11	.0749	.0329	.0021	-.7600	.2501	2.0285
1.770	-0.25	-4.83	2.51	5.11	.0750	.0320	-.0026	-.7372	.2915	1.7242
1.770	-0.32	-4.87	4.19	5.10	.0741	.0318	-.0059	-.4733	.2864	.2409
1.770	-0.39	-4.94	5.87	5.10	.0637	.0309	-.0058	-.3486	.2648	-.5125
1.770	-0.40	-4.93	7.52	5.10	.0586	.0305	-.0046	-.4836	.2890	.1356
1.770	-0.33	-4.90	7.55	7.59	.0489	.0310	.0019	-.3792	.2724	-.1240
1.770	-0.36	-4.85	5.87	7.58	.0515	.0309	-.0005	-.5363	.2793	.7555
1.770	-0.37	-4.85	5.87	7.58	.0501	.0309	-.0003	-.5348	.2796	.7463
1.770	-0.40	-4.86	4.19	7.60	.0572	.0306	-.0039	-.5791	.2583	1.0568
1.770	-0.38	-4.83	2.51	7.60	.0650	.0311	-.0055	-.4966	.2547	.7766
1.770	-0.32	-4.84	0.83	7.61	.0703	.0316	-.0046	-.4850	.2551	.7871
1.770	-0.39	-4.80	0.83	10.05	.0575	.0306	-.0035	-.3485	.2491	.1661
1.770	-0.36	-4.81	2.51	10.08	.0512	.0309	-.0001	-.4615	.2567	.7401
1.770	-0.33	-4.80	4.19	10.06	.0483	.0311	.0022	-.4437	.2527	.5995
1.770	-0.33	-4.80	5.87	10.06	.0487	.0310	.0020	-.4615	.2506	.6450
1.770	-0.33	-4.81	7.55	10.07	.0472	.0312	.0027	-.5381	.2563	.9243
1.770	-0.32	-4.81	7.55	12.56	.0487	.0314	.0026	-.4256	.2546	.5410
1.770	-0.32	-4.82	5.87	12.57	.0493	.0314	.0025	-.4439	.2574	.6956
1.770	-0.32	-4.81	4.19	12.55	.0490	.0312	.0025	-.3370	.2474	.1773
1.770	-0.33	-4.83	2.51	12.56	.0493	.0311	.0019	-.3361	.2568	.1772
1.770	-0.33	-4.77	0.83	12.54	.0490	.0311	.0021	-.3724	.2559	.3636
1.770	-0.33	-4.79	0.83	15.06	.0483	.0312	.0025	-.3071	.2532	.0606
1.770	-0.32	-4.83	2.51	15.10	.0483	.0314	.0026	-.3367	.2519	.2045
1.770	-0.32	-4.81	4.19	15.09	.0486	.0314	.0026	-.3722	.2588	.3773
1.770	-0.32	-4.86	5.87	15.11	.0490	.0314	.0025	-.3422	.2572	.2063
1.770	-0.32	-4.81	7.55	15.08	.0490	.0314	.0025	-.3429	.2484	.1653
1.770	-0.04	-4.91	0.83	2.21	.0676	.0341	.0104	-.7275	.3096	1.0722
1.770	-0.11	-8.00	2.51	3.49	.0886	.0330	-.0002	-.9565	.3927	.6647
1.770	-0.23	-8.07	4.20	3.50	.0864	.0324	-.0056	-.7383	.3649	-.1009
1.770	-0.33	-8.00	5.87	3.48	.0810	.0316	-.0083	-.7909	.3762	.1024
1.770	-0.40	-8.03	7.55	3.48	.0724	.0310	-.0091	-.6609	.3999	-.5431
1.770	-0.41	-7.98	7.55	5.12	.0580	.0303	-.0050	-.7833	.3603	.3990
1.770	-0.41	-7.97	5.87	5.13	.0669	.0308	-.0076	-.6844	.3400	.0041
1.770	-0.35	-7.95	4.19	5.14	.0759	.0315	-.0076	-.7067	.3577	.2155
1.770	-0.26	-7.85	2.51	5.13	.0803	.0320	-.0050	-.9945	.3789	1.8838

TABLE II.- AERODYNAMIC CHARACTERISTICS OF RETURN COMPONENT AND BOMB POD WITH MUTUAL INTERFERENCE; $\beta_P = 0^o$; $\beta_R = 0^o$ - Continued

M	α_R, deg	α_P, deg	x_a, in.	z_a, in.	$C_{L,R}$	$C'_{D,R}$	$C_{m,R}$	$C_{L,P}$	$C'_{D,P}$	$C_{m,P}$
1.770	-0.15	-7.87	0.83	5.17	.0806	.0327	.0005	-1.1196	.3541	2.6505
1.770	-0.10	-7.86	0.00	5.16	.0789	.0332	.0037	-1.0433	.3446	2.3715
1.770	-0.36	-9.97	0.83	7.66	.0767	.0315	-.0083	-.9964	.4244	1.2502
1.770	-0.41	-9.99	4.19	7.66	.0580	.0304	-.0049	-1.1133	.4405	1.6083
1.770	-0.37	-10.04	5.88	7.65	.0506	.0308	-.0002	-.9719	.4458	.7550
1.770	-0.34	-10.06	7.55	7.64	.0481	.0310	.0019	-.8363	.4211	-.0437
1.770	-0.33	-10.07	7.56	10.20	.0480	.0312	.0026	-1.0549	.4303	1.3618
1.770	-0.34	-10.02	5.88	10.18	.0481	.0312	.0020	-1.0043	.4146	1.2795
1.770	-0.34	-10.01	4.19	10.17	.0481	.0314	.0021	-.9499	.4140	1.0472
1.770	-0.36	-10.00	2.52	10.17	.0509	.0312	-.0001	-.9560	.4169	1.1579
1.770	-0.41	-9.95	0.83	10.13	.0573	.0306	-.0045	-.8921	.4041	.8682
1.770	-0.34	-9.97	0.83	12.63	.0480	.0311	.0021	-.8312	.4060	.6074
1.770	-0.33	-10.01	2.52	12.65	.0484	.0311	.0021	-.8074	.4026	.4785
1.770	-0.33	-9.95	4.19	12.62	.0480	.0313	.0027	-.8988	.4019	.9380
1.770	-0.33	-9.93	4.19	12.61	.0480	.0312	.0027	-.8988	.4027	.9381
1.770	-0.33	-9.93	5.88	12.61	.0473	.0315	.0028	-.9388	.4141	1.0580
1.770	-0.32	-9.97	7.55	12.63	.0483	.0315	.0026	-.9267	.4111	.9731
1.770	-0.33	-10.00	7.55	15.18	.0473	.0314	.0028	-.8919	.4050	.8955
1.770	-0.33	-9.97	5.88	15.14	.0473	.0314	.0027	-.8130	.4049	.4937
1.770	-0.32	-9.96	4.19	15.14	.0487	.0314	.0026	-.8431	.4082	.6650
1.770	-0.32	-9.97	2.56	15.13	.0480	.0314	.0027	-.8495	.4046	.6665
1.770	-0.32	-9.95	0.83	15.12	.0480	.0312	.0027	-.7850	.3942	.3905
1.770	-0.26	-0.31	0.00	0.52	.0380	.0315	.0094	-.1538	.2248	-.3136
1.770	-0.18	-0.32	0.84	0.52	.0442	.0321	.0113	-.0928	.2509	-.8199
1.770	-0.10	-0.37	1.67	0.55	.0511	.0328	.0129	-.0552	.2535	-1.2658
1.770	-0.01	-0.33	2.53	1.21	.0708	.0342	.0108	-.1131	.2357	-1.2504
1.770	-0.06	-0.35	1.69	1.22	.0604	.0335	.0115	-.1684	.2409	-.7585
1.770	-0.14	-0.29	0.84	1.19	.0509	.0329	.0109	-.2359	.2247	-.1416
1.770	-0.22	-0.25	0.01	1.18	.0433	.0321	.0097	-.2916	.2039	.4582
1.770	-0.06	2.70	2.53	1.22	.0649	.0336	.0100	.1424	.2303	-1.5515
1.770	-0.12	2.70	1.68	1.21	.0555	.0332	.0104	.0634	.2302	-.9451
1.770	-0.19	2.73	0.86	1.20	.0459	.0324	.0101	-.0147	.2113	-.3393
1.770	-0.25	2.79	0.01	1.17	.0396	.0319	.0090	-.0930	.1863	.3759
1.770	0.03	-2.41	2.53	1.24	.0741	.0343	.0114	-.2961	.2687	-1.0610
1.770	-0.02	-2.39	1.68	1.24	.0643	.0339	.0122	-.3279	.2703	-.6306
1.770	-0.11	-2.38	0.84	1.24	.0530	.0331	.0116	-.3898	.2587	-.0160
1.770	-0.19	-2.29	0.00	1.21	.0462	.0323	.0099	-.4346	.2366	.5664
1.770	1.79	12.67	0.89	2.04	.1310	.0379	-.0122	.6686	.3292	.4229
1.770	1.84	12.64	1.73	2.03	.1387	.0389	-.0123	.6638	.3374	-.1069
1.770	1.88	12.53	2.56	2.06	.1467	.0397	-.0131	.7371	.3545	-1.0633
1.770	1.92	12.43	4.25	2.06	.1595	.0401	-.0154	.7937	.3830	-2.5217
1.770	1.77	12.44	7.59	3.34	.1562	.0388	-.0214	.8125	.4727	-2.0152
1.770	1.81	12.42	5.92	3.35	.1574	.0390	-.0196	.8267	.4071	-1.9334
1.770	1.86	12.51	4.24	3.34	.1548	.0392	-.0167	.8290	.3765	-1.2651
1.770	1.87	12.63	2.56	3.31	.1492	.0393	-.0139	.6980	.3370	.1839
1.770	1.85	12.67	1.73	3.32	.1428	.0390	-.0129	.6903	.3291	.7574
1.770	1.82	12.73	0.89	3.28	.1375	.0387	-.0129	.8007	.3659	.7268
1.770	1.85	12.74	2.56	4.98	.1510	.0390	-.0159	.8421	.3917	.7702
1.770	1.79	12.64	4.25	5.00	.1517	.0386	-.0189	.7859	.3706	.1196
1.770	1.75	12.57	5.93	4.99	.1526	.0383	-.0212	.9121	.3995	-1.1931
1.770	1.71	12.50	7.59	5.02	.1497	.0379	-.0222	.8685	.4225	-1.5793
1.770	1.75	10.62	0.03	2.00	.1275	.0377	-.0129	.4685	.2589	.5883
1.770	1.80	10.56	0.86	2.03	.1337	.0382	-.0123	.3774	.2448	.5312
1.770	1.87	10.52	1.71	2.04	.1431	.0392	-.0123	.4301	.2673	-.1365
1.770	1.90	10.46	2.55	2.05	.1493	.0400	-.0127	.5320	.2891	-1.0895
1.770	1.92	10.37	4.22	2.08	.1616	.0403	-.0157	.5945	.3097	-2.2490
1.770	1.77	10.42	7.58	3.33	.1584	.0387	-.0222	.6350	.3969	-1.8417
1.770	1.91	10.38	5.90	3.35	.1585	.0390	-.0202	.5948	.3252	-1.7064
1.770	1.86	10.43	4.22	3.33	.1573	.0393	-.0174	.6136	.3034	-1.3423
1.770	1.89	10.51	2.57	3.34	.1530	.0396	-.0145	.4534	.2641	.0485
1.770	1.87	10.59	1.71	3.31	.1472	.0394	-.0135	.4274	.2543	.7362
1.770	1.84	10.64	0.87	3.28	.1408	.0391	-.0129	.5216	.2847	.7372
1.770	1.80	10.62	0.03	3.27	.1342	.0382	-.0126	.6773	.3257	.0685
1.770	1.87	10.59	0.02	4.98	.1442	.0390	-.0126	.7105	.3396	-.0357
1.770	1.88	10.58	0.86	4.99	.1473	.0392	-.0133	.6947	.3298	-.0038
1.770	1.84	10.64	2.55	4.97	.1512	.0390	-.0162	.5431	.2971	.7453
1.770	1.79	10.56	4.23	5.00	.1545	.0387	-.0197	.5300	.2928	.1501
1.770	1.75	10.47	5.90	5.00	.1544	.0383	-.0220	.6825	.3112	-1.2649
1.770	1.71	10.44	7.58	4.99	.1519	.0379	-.0230	.6375	.3366	-1.3909
1.770	1.72	10.49	7.58	7.52	.1426	.0375	-.0193	.6815	.3268	-.5849
1.770	1.79	8.50	0.86	7.51	.1518	.0387	-.0189	.6366	.3040	-.4767
1.770	1.74	8.53	2.56	7.49	.1531	.0383	-.0217	.5790	.2924	-.3522
1.770	1.71	8.49	4.22	7.51	.1508	.0378	-.0226	.5114	.2671	-.1429
1.770	1.71	8.50	5.90	7.51	.1471	.0375	-.0216	.4283	.2609	.1791
1.770	1.81	5.40	0.01	2.09	.1338	.0382	-.0121	-.1014	.1701	1.2757
1.770	1.86	5.36	0.84	2.09	.1404	.0391	-.0116	-.0637	.1779	.6667
1.770	1.93	5.26	1.68	2.14	.1508	.0400	-.0119	.0093	.1959	-.0882
1.770	1.95	5.24	2.52	2.13	.1561	.0406	-.0123	.1121	.2070	-.9189
1.770	1.96	5.18	4.19	2.15	.1674	.0410	-.0159	.1614	.2226	-1.5450
1.770	1.75	5.22	7.54	3.39	.1592	.0388	-.0235	.2514	.3060	-1.4072

TABLE II.- AERODYNAMIC CHARACTERISTICS OF RETURN COMPONENT AND BOMB POD WITH MUTUAL INTERFERENCE; $\beta_P = 0^o$; $\beta_R = 0^o$ - Continued

M	α_R, deg	α_P, deg	x_a, in.	z_a, in.	$C_{L,R}$	$C'_{D,R}$	$C_{m,R}$	$C_{L,P}$	$C'_{D,P}$	$C_{m,P}$
1.770	1.80	5.24	5.86	3.38	.1621	.0392	-.0217	.1395	.2295	-.9538
1.770	1.86	5.27	4.20	3.37	.1617	.0396	-.0187	.1888	.2026	-1.0612
1.770	1.91	5.30	2.52	3.39	.1579	.0401	-.0150	.0315	.1908	.1508
1.770	1.91	5.41	1.69	3.34	.1537	.0400	-.0135	-.0355	.1800	.7807
1.770	1.90	5.43	0.85	3.34	.1477	.0395	-.0124	-.0776	.1654	1.2408
1.770	1.86	5.40	0.01	3.35	.1414	.0390	-.0121	.0114	.1686	.9180
1.770	1.90	5.41	0.01	5.02	.1502	.0396	-.0130	.1636	.1867	.4147
1.770	1.89	5.44	0.85	5.02	.1528	.0396	-.0142	.0516	.1705	.9477
1.770	1.85	5.47	2.52	5.00	.1571	.0392	-.0179	-.0383	.1809	1.2023
1.770	1.78	5.40	4.20	5.01	.1575	.0387	-.0212	.1048	.2076	.1850
1.770	1.73	5.34	5.87	5.01	.1557	.0381	-.0233	.2637	.2022	-1.0392
1.770	1.69	5.32	7.55	5.02	.1517	.0377	-.0239	.1430	.2225	-.5594
1.770	1.72	5.36	7.55	7.51	.1409	.0375	-.0189	.2469	.2210	-.4780
1.770	1.70	5.41	5.86	7.52	.1461	.0374	-.0218	.1319	.2127	.4087
1.770	1.70	5.39	4.20	7.53	.1505	.0378	-.0231	.1918	.2018	.3248
1.770	1.73	5.41	2.52	7.52	.1537	.0383	-.0225	.2557	.2158	.0221
1.770	1.79	5.39	0.84	7.54	.1549	.0389	-.0201	.3199	.2261	-.1580
1.770	1.70	5.45	0.85	10.00	.1498	.0378	-.0226	.4531	.2543	-.6014
1.770	1.70	5.44	2.52	9.99	.1453	.0373	-.0212	.4371	.2414	-.5972
1.770	1.73	5.44	4.20	10.00	.1415	.0376	-.0188	.3490	.2299	-.2610
1.770	1.74	5.38	5.86	10.04	.1398	.0376	-.0177	.2918	.2154	-.1093
1.770	1.74	5.41	7.55	10.03	.1409	.0376	-.0179	.2036	.2016	.2676
1.770	1.87	0.27	0.01	2.13	.1401	.0389	-.0112	-.5554	.1904	1.8725
1.770	1.95	0.23	0.84	2.15	.1486	.0401	-.0103	-.4583	.2103	1.0722
1.770	2.00	0.19	1.69	2.14	.1577	.0409	-.0106	-.3606	.2209	.2039
1.770	2.02	0.13	2.54	2.17	.1650	.0415	-.0119	-.2872	.2175	-.4544
1.770	1.98	0.10	4.20	2.18	.1743	.0413	-.0169	-.2612	.2323	-.8550
1.770	1.73	0.12	7.55	3.41	.1632	.0388	-.0258	-.0985	.2866	-1.0750
1.770	1.80	0.10	5.88	3.44	.1674	.0394	-.0239	-.2407	.2267	-.4392
1.770	1.86	0.12	4.20	3.43	.1670	.0399	-.0203	-.1938	.2056	-.5468
1.770	1.94	0.17	2.54	3.44	.1656	.0404	-.0160	-.3270	.2103	.4130
1.770	1.95	0.22	1.69	3.42	.1603	.0405	-.0138	-.4235	.1999	1.0773
1.770	1.95	0.26	0.84	3.42	.1556	.0401	-.0124	-.5319	.1738	1.7994
1.770	1.92	0.28	0.01	3.41	.1484	.0399	-.0114	-.5626	.1689	2.1330
1.770	1.93	0.31	0.01	5.07	.1556	.0402	-.0133	-.3803	.1515	1.6087
1.770	1.91	0.34	0.84	5.06	.1592	.0400	-.0153	-.5110	.1553	2.1743
1.770	1.85	0.31	2.54	5.07	.1620	.0394	-.0196	-.4620	.1968	1.6715
1.770	1.77	0.28	4.20	5.04	.1614	.0389	-.0233	-.2223	.2124	.2619
1.770	1.71	0.23	5.88	5.05	.1578	.0382	-.0251	-.1849	.1958	-.1425
1.770	1.67	0.25	7.55	5.03	.1528	.0374	-.0251	-.2736	.2206	.1396
1.770	1.73	0.24	7.55	7.53	.1413	.0375	-.0187	-.0858	.2089	-.3319
1.770	1.69	0.28	5.88	7.54	.1459	.0372	-.0219	-.2420	.2065	.6344
1.770	1.68	0.28	4.20	7.56	.1515	.0376	-.0241	-.3084	.1761	1.1550
1.770	1.71	0.33	2.54	7.53	.1558	.0382	-.0241	-.1425	.1810	.4718
1.770	1.77	0.29	0.84	7.56	.1576	.0388	-.0218	-.1255	.1985	.5216
1.770	1.69	0.32	0.84	10.03	.1518	.0375	-.0238	.0225	.2064	-.0888
1.770	1.70	0.33	2.54	10.03	.1452	.0372	-.0215	-.0545	.1969	.2579
1.770	1.74	0.32	4.20	10.03	.1422	.0377	-.0185	-.0959	.1967	.3914
1.770	1.73	0.35	5.88	10.01	.1402	.0375	-.0179	-.1311	.1795	.4688
1.770	1.74	0.35	7.55	10.02	.1409	.0375	-.0179	-.2436	.1801	.9069
1.770	1.75	0.31	7.55	12.55	.1406	.0377	-.0175	-.0841	.1966	.3476
1.770	1.74	0.30	5.88	12.56	.1393	.0377	-.0174	-.0488	.1977	.2566
1.770	1.74	0.29	4.20	12.55	.1406	.0375	-.0178	.0344	.2044	-.1056
1.770	1.73	0.29	2.54	12.56	.1399	.0377	-.0179	.0166	.2068	-.0192
1.770	1.73	0.30	0.84	12.55	.1410	.0376	-.0184	.0283	.2052	-.0496
1.770	1.74	0.28	0.84	15.07	.1406	.0376	-.0177	.0701	.2083	-.2784
1.770	1.74	0.28	2.54	15.07	.1399	.0378	-.0174	.0701	.2073	-.2784
1.770	1.75	0.31	4.20	15.05	.1413	.0377	-.0177	.0400	.2046	-.0793
1.770	1.75	0.31	5.87	15.06	.1409	.0377	-.0175	.0222	.2048	-.0200
1.770	1.75	0.30	7.55	15.06	.1423	.0379	-.0178	.0344	.2008	-.1186
1.770	1.59	-4.96	7.55	3.42	.1663	.0384	-.0286	-.4672	.3498	-.8875
1.770	1.77	-4.96	5.87	3.45	.1721	.0395	-.0266	-.6264	.3093	-.0845
1.770	1.86	-4.93	4.19	3.46	.1745	.0401	-.0232	-.6228	.2907	.0507
1.770	1.97	-4.88	2.52	3.44	.1746	.0410	-.0177	-.7489	.3083	.9009
1.770	2.00	-4.85	1.68	3.44	.1713	.0415	-.0148	-.8456	.3087	1.5244
1.770	2.00	-4.79	0.83	3.43	.1651	.0412	-.0131	-.9556	.2987	2.2870
1.770	1.98	-4.75	0.00	3.45	.1594	.0407	-.0122	-1.0781	.2790	3.0940
1.770	1.97	-4.75	0.00	5.11	.1642	.0407	-.0141	-.9956	.2311	3.2341
1.770	1.94	-4.78	0.83	5.12	.1664	.0404	-.0165	-1.0530	.2542	3.3590
1.770	1.83	-4.83	2.51	5.12	.1660	.0396	-.0218	-.8498	.2966	2.0686
1.770	1.75	-4.89	4.19	5.10	.1661	.0392	-.0257	-.5980	.2803	.5462
1.770	1.68	-4.95	5.87	5.14	.1602	.0379	-.0272	-.7169	.2808	1.0681
1.770	1.66	-4.93	7.52	5.10	.1545	.0372	-.0265	-.7022	.2978	.7518
1.770	1.72	-4.94	7.55	7.61	.1400	.0373	-.0184	-.4860	.2679	.1352
1.770	1.69	-4.87	5.87	7.59	.1457	.0371	-.0221	-.5936	.2830	.8307
1.770	1.67	-4.84	4.19	7.61	.1527	.0373	-.0252	-.7467	.2623	1.8364
1.770	1.69	-4.82	2.51	7.61	.1584	.0381	-.0261	-.6354	.2448	1.4395
1.770	1.75	-4.83	0.83	7.61	.1619	.0390	-.0241	-.5576	.2525	1.1605
1.770	1.68	-4.80	0.83	10.06	.1523	.0374	-.0247	-.3490	.2499	.2071
1.770	1.69	-4.81	2.51	10.08	.1449	.0372	-.0217	-.4857	.2571	.8560

TABLE II.- AERODYNAMIC CHARACTERISTICS OF RETURN COMPONENT AND BOMB POD WITH MUTUAL INTERFERENCE; $\beta_P = 0^o$; $\beta_R = 0^o$ - Continued

M	α_R, deg	α_P, deg	x_a, in.	z_a, in.	$C_{L,R}$	$C'_{D,R}$	$C_{m,R}$	$C_{L,P}$	$C'_{D,P}$	$C_{m,P}$
1.770	1.73	-4.82	4.19	10.08	.1407	.0375	-.0182	-.5158	.2517	.9320
1.770	1.73	-4.83	5.87	10.09	.1397	.0375	-.0179	-.6354	.2519	1.4946
1.770	1.74	-4.81	7.55	10.08	.1404	.0375	-.0178	-.6512	.2633	1.3632
1.770	1.74	-4.82	7.55	12.57	.1404	.0378	-.0175	-.4867	.2470	.8427
1.770	1.75	-4.82	5.87	12.57	.1407	.0377	-.0175	-.4681	.2572	.7969
1.770	1.74	-4.81	4.19	12.55	.1405	.0375	-.0178	-.3610	.2506	.2648
1.770	1.73	-4.82	2.51	12.56	.1396	.0375	-.0179	-.3484	.2584	.2480
1.770	1.73	-4.77	0.83	12.54	.1410	.0376	-.0183	-.3727	.2577	.3905
1.770	1.74	-4.82	0.83	15.08	.1410	.0376	-.0179	-.3068	.2547	.0599
1.770	1.74	-4.83	2.51	15.10	.1396	.0378	-.0174	-.3189	.2556	.1312
1.770	1.75	-4.83	4.19	15.10	.1410	.0378	-.0175	-.3667	.2578	.3753
1.770	1.75	-4.85	5.87	15.11	.1410	.0377	-.0176	-.3544	.2587	.2770
1.770	1.74	-4.84	7.55	15.10	.1407	.0377	-.0176	-.3553	.2465	.2496
1.770	1.98	-8.03	2.51	3.51	.1811	.0413	-.0195	-1.0781	.4246	1.2418
1.770	1.85	-8.08	4.20	3.50	.1822	.0405	-.0260	-.9700	.4070	.4517
1.770	1.73	-8.07	5.87	3.49	.1759	.0396	-.0297	-.9325	.4090	.0186
1.770	1.66	-8.09	7.55	3.48	.1686	.0383	-.0308	-.7960	.4304	-.7924
1.770	1.64	-8.01	7.55	5.14	.1544	.0368	-.0271	-1.0049	.3896	.9215
1.770	1.66	-7.95	5.87	5.15	.1617	.0377	-.0287	-1.0632	.3770	1.5623
1.770	1.73	-7.97	4.19	5.16	.1707	.0389	-.0280	-.8964	.3692	.8785
1.770	1.83	-7.86	2.51	5.14	.1730	.0400	-.0242	-1.0995	.3924	2.1298
1.770	1.94	-7.83	0.83	5.17	.1706	.0404	-.0177	-1.3691	.3750	3.7783
1.770	1.98	-7.84	0.00	5.19	.1707	.0410	-.0159	-1.3824	.3688	4.0242
1.770	1.73	-9.96	0.83	7.67	.1709	.0390	-.0281	-1.0734	.4285	1.6369
1.770	1.67	-9.97	2.52	7.68	.1632	.0380	-.0290	-1.2397	.4436	2.4422
1.770	1.65	-10.01	4.20	7.68	.1534	.0369	-.0266	-1.2283	.4621	2.0594
1.770	1.68	-10.04	5.88	7.65	.1449	.0370	-.0220	-1.0288	.4484	.7695
1.770	1.73	-10.08	7.56	7.67	.1412	.0373	-.0184	-1.0885	.4483	.9752
1.770	1.74	-10.05	7.56	10.19	.1411	.0375	-.0177	-1.0988	.4394	1.4801
1.770	1.73	-9.99	5.89	10.18	.1409	.0376	-.0182	-1.1868	.4311	2.1686
1.770	1.74	-10.00	4.20	10.17	.1415	.0376	-.0183	-1.0159	.4056	1.3749
1.770	1.69	-10.00	2.52	10.18	.1448	.0371	-.0218	-1.0018	.4183	1.3717
1.770	1.65	-9.94	0.83	10.14	.1525	.0371	-.0260	-.9192	.4079	1.0232
1.770	1.73	-9.99	0.84	12.64	.1407	.0374	-.0181	-.8518	.4114	.6935
1.770	1.74	-9.99	2.52	12.63	.1411	.0375	-.0182	-.8174	.4018	[illegible]
1.770	1.74	-9.95	4.19	12.62	.1414	.0376	-.0178	-.9250	.4085	1.052[illegible]
1.770	1.74	-9.93	5.88	12.61	.1401	.0379	-.0174	-.9725	.4131	1.2277
1.770	1.74	-9.96	7.55	12.63	.1393	.0377	-.0173	-1.0270	.4119	1.4323
1.770	1.75	-9.98	7.55	15.17	.1411	.0379	-.0176	-.9128	.4123	.9950
1.770	1.75	-9.99	5.88	15.16	.1411	.0378	-.0176	-.8267	.4084	.5518
1.770	1.74	-9.97	4.19	15.14	.1391	.0377	-.0173	-.8299	.4025	.5518
1.770	1.75	-9.97	2.51	15.14	.1425	.0378	-.0178	-.8299	.4035	.5655
1.770	1.74	-9.98	0.83	15.14	.1411	.0376	-.0177	-.7889	.3967	.3913
1.770	1.75	-9.96	5.88	12.63	.1408	.0378	-.0175	-.9681	.4093	1.2273
1.770	1.80	1.72	0.00	0.51	.1282	.0375	-.0106	-.1858	.2018	-.0071
1.770	1.87	1.71	0.84	0.51	.1337	.0383	-.0091	-.1257	.2357	-.5806
1.770	1.96	1.68	1.67	0.52	.1418	.0393	-.0076	-.0940	.2374	-1.0378
1.770	2.04	1.60	2.51	1.26	.1561	.0410	-.0082	-.1389	.2217	-1.0941
1.770	1.98	1.64	1.67	1.25	.1482	.0402	-.0085	-.1949	.2171	-.4943
1.770	1.91	1.68	0.84	1.23	.1401	.0390	-.0093	-.2502	.2010	.1189
1.770	1.83	1.78	0.00	1.18	.1335	.0381	-.0109	-.3117	.1743	.8288
1.770	1.99	4.73	2.52	1.19	.1531	.0407	-.0095	.1101	.2196	-1.4077
1.770	1.93	4.70	1.67	1.22	.1440	.0396	-.0095	.0372	.2130	-.7626
1.770	1.86	4.78	0.83	1.19	.1362	.0386	-.0103	-.0234	.1949	-.1205
1.770	1.80	4.85	0.00	1.17	.1292	.0377	-.0113	-.1072	.1658	.6910
1.770	2.08	-0.41	2.53	1.23	.1597	.0414	-.0075	-.2934	.2497	-.9964
1.770	2.02	-0.36	1.68	1.22	.1515	.0405	-.0078	-.3614	.2427	-.3526
1.770	1.93	-0.33	0.84	1.22	.1423	.0392	-.0090	-.4118	.2238	.3135
1.770	1.85	-0.26	0.01	1.19	.1354	.0383	-.0107	-.4563	.1995	.9507
1.770	3.86	12.65	0.89	2.05	.2160	.0496	-.0311	.4538	.2649	1.0261
1.770	3.92	12.56	1.72	2.05	.2242	.0508	-.0310	.5377	.2924	-.1395
1.770	3.96	12.46	2.56	2.07	.2300	.0518	-.0308	.6008	.3039	-1.1618
1.770	4.03	12.38	4.25	2.08	.2451	.0534	-.0328	.5622	.3200	-2.1445
1.770	3.86	12.37	7.59	3.36	.2449	.0516	-.0407	.6779	.4424	-2.2207
1.770	3.91	12.41	5.92	3.34	.2443	.0521	-.0383	.6048	.3569	-1.7486
1.770	3.95	12.44	4.24	3.35	.2414	.0521	-.0354	.6854	.3294	-1.4145
1.770	3.96	12.58	2.56	3.32	.2347	.0518	-.0325	.6148	.3123	.0173
1.770	3.94	12.65	1.72	3.32	.2281	.0513	-.0315	.5751	.3033	.9928
1.770	3.90	12.73	0.88	3.29	.2206	.0503	-.0309	.6104	.3160	1.4435
1.770	3.95	12.73	2.56	4.99	.2352	.0515	-.0335	.6288	.3353	1.5172
1.770	3.89	12.59	4.24	5.02	.2381	.0513	-.0370	.6901	.3398	.2272
1.770	3.84	12.50	5.92	5.01	.2393	.0509	-.0399	.7523	.3392	-1.1060
1.770	3.80	12.44	7.59	5.04	.2384	.0504	-.0416	.6248	.3578	-1.1969
1.770	3.83	10.61	0.02	2.02	.2133	.0490	-.0319	.2302	.2077	1.5633
1.770	3.88	10.56	0.87	2.02	.2187	.0500	-.0312	.2161	.2100	.9012
1.770	3.95	10.45	1.71	2.07	.2280	.0514	-.0309	.3249	.2314	-.1744
1.770	4.00	10.40	2.55	2.06	.2345	.0524	-.0308	.4277	.2501	-1.2212
1.770	4.04	10.31	4.22	2.11	.2474	.0540	-.0329	.3766	.2661	-1.8884
1.770	3.86	10.37	7.58	3.33	.2466	.0517	-.0414	.5204	.3824	-2.0268
1.770	3.91	10.32	5.90	3.37	.2469	.0522	-.0392	.4002	.2876	-1.5293

TABLE II. - AERODYNAMIC CHARACTERISTICS OF RETURN COMPONENT AND BOMB POD WITH MUTUAL INTERFERENCE; $\beta_P = 0^o$; $\beta_R = 0^o$ - Continued

M	α_R, deg	α_P, deg	x_a, in.	z_a, in.	$C_{L,R}$	$C'_{D,R}$	$C_{m,R}$	$C_{L,P}$	$C'_{D,P}$	$C_{m,P}$
1.770	3.96	10.40	4.22	3.33	.2442	.0524	-.0359	.5023	.2691	-1.4460
1.770	3.97	10.51	2.57	3.31	.2375	.0523	-.0329	.3804	.2463	-.0946
1.770	3.95	10.58	1.71	3.30	.2304	.0516	-.0316	.3349	.2389	.8282
1.770	3.92	10.63	0.87	3.29	.2242	.0506	-.0309	.3316	.2394	1.3318
1.770	3.88	10.58	0.02	3.30	.2168	.0497	-.0308	.4536	.2644	.8774
1.770	3.95	10.61	0.02	4.97	.2269	.0512	-.0306	.6085	.3010	.3593
1.770	3.96	10.60	0.86	5.00	.2315	.0515	-.0313	.4464	.2638	1.1104
1.770	3.95	10.63	2.55	4.99	.2371	.0518	-.0341	.3640	.2565	1.2960
1.770	3.89	10.50	4.22	5.01	.2398	.0515	-.0378	.4572	.2712	.1021
1.770	3.83	10.41	5.90	5.02	.2400	.0510	-.0405	.5194	.2608	-1.0423
1.770	3.79	10.40	7.58	5.01	.2385	.0503	-.0420	.4026	.2849	-.9179
1.770	3.80	10.47	7.58	7.51	.2284	.0495	-.0385	.6214	.3017	-.7173
1.770	3.89	8.51	0.86	7.51	.2364	.0513	-.0365	.6182	.2989	-.3353
1.770	3.84	8.53	2.56	7.50	.2378	.0509	-.0396	.5093	.2730	-.0745
1.770	3.79	8.51	4.22	7.52	.2360	.0502	-.0412	.3186	.2273	.7129
1.770	3.78	8.47	5.90	7.52	.2323	.0497	-.0406	.3011	.2382	.4445
1.770	3.89	5.37	0.01	2.11	.2180	.0498	-.0305	-.2761	.1404	1.7845
1.770	3.95	5.31	0.85	2.12	.2253	.0511	-.0299	-.1971	.1579	.9607
1.770	4.01	5.25	1.68	2.13	.2334	.0525	-.0297	-.1172	.1681	.0957
1.770	4.05	5.21	2.51	2.14	.2404	.0534	-.0299	-.0316	.1773	-.7163
1.770	4.09	5.16	4.19	2.16	.2542	.0549	-.0329	-.0657	.1990	-1.1027
1.770	3.84	5.20	7.54	3.39	.2488	.0519	-.0432	.1481	.2991	-1.5288
1.770	3.91	5.19	5.86	3.40	.2516	.0526	-.0409	.0018	.2099	-.9302
1.770	3.96	5.24	4.20	3.39	.2485	.0528	-.0373	.0263	.1829	-.7593
1.770	4.00	5.30	2.52	3.38	.2443	.0533	-.0335	-.0486	.1784	.1180
1.770	3.99	5.39	1.69	3.35	.2367	.0525	-.0316	-.1221	.1691	.8316
1.770	3.98	5.43	0.85	3.34	.2316	.0519	-.0307	-.2173	.1448	1.5652
1.770	3.93	5.40	0.01	3.36	.2238	.0509	-.0303	-.2349	.1295	1.8965
1.770	3.98	5.48	0.01	5.00	.2330	.0522	-.0310	-.0476	.1434	1.4247
1.770	3.99	5.45	0.84	5.04	.2377	.0524	-.0323	-.1721	.1345	1.9745
1.770	3.95	5.45	2.52	5.01	.2431	.0523	-.0358	-.1718	.1582	1.5386
1.770	3.88	5.36	4.20	5.02	.2431	.0517	-.0394	.0552	.1932	.0084
1.770	3.82	5.31	5.86	5.03	.2419	.0510	-.0420	.0299	.1751	-.2977
1.770	3.78	5.29	7.55	5.04	.2400	.0502	-.0434	-.0375	.2074	-.2260
1.770	3.80	5.33	7.55	7.52	.2279	.0494	-.0384	.2090	.2045	-.6043
1.770	3.77	5.39	5.86	7.52	.2326	.0495	-.0410	.0579	.1983	.4431
1.770	3.78	5.40	4.20	7.55	.2362	.0501	-.0418	.0101	.1737	1.0550
1.770	3.83	5.42	2.52	7.53	.2395	.0510	-.0406	.1692	.1906	.4407
1.770	3.89	5.40	0.84	7.54	.2404	.0516	-.0378	.2965	.2231	.0251
1.770	3.79	5.45	0.85	10.00	.2362	.0502	-.0415	.4359	.2577	-.5799
1.770	3.78	5.45	2.52	10.00	.2324	.0496	-.0405	.4196	.2417	-.4843
1.770	3.80	5.42	4.20	10.02	.2271	.0494	-.0380	.3083	.2236	-.0597
1.770	3.82	5.43	5.86	10.03	.2256	.0495	-.0362	.1568	.1865	.5799
1.770	3.82	5.42	7.55	10.03	.2252	.0495	-.0363	.0747	.1826	.7651
1.770	3.95	0.26	0.01	2.14	.2244	.0508	-.0296	-.7143	.1804	2.3231
1.770	4.03	0.21	0.84	2.16	.2323	.0524	-.0284	-.6214	.1904	1.4937
1.770	4.09	0.15	1.70	2.17	.2407	.0538	-.0281	-.5242	.1962	.6139
1.770	4.13	0.11	2.54	2.18	.2494	.0548	-.0292	-.4741	.2002	-.0106
1.770	4.12	0.04	4.20	2.19	.2602	.0556	-.0333	-.4230	.2345	-.8115
1.770	3.91	0.07	7.55	3.43	.2514	.0518	-.0455	-.2077	.2883	-1.1538
1.770	3.89	0.06	5.88	3.45	.2547	.0527	-.0429	-.3678	.2167	-.3914
1.770	3.96	0.09	4.20	3.45	.2549	.0534	-.0392	-.3571	.1952	-.2315
1.770	4.04	0.14	2.53	3.45	.2518	.0540	-.0346	-.4371	.2030	.5378
1.770	4.04	0.17	1.69	3.45	.2453	.0535	-.0323	-.5397	.1937	1.2443
1.770	4.02	0.22	0.84	3.44	.2382	.0528	-.0308	-.6487	.1738	2.0882
1.770	3.99	0.29	0.01	3.42	.2331	.0522	-.0304	-.7636	.1546	2.9457
1.770	4.00	0.27	0.01	3.60	.2331	.0522	-.0304	-.7637	.1479	2.9729
1.770	4.03	0.26	0.84	3.58	.2398	.0531	-.0310	-.6610	.1760	2.1993
1.770	4.03	0.18	2.54	3.60	.2522	.0540	-.0350	-.4434	.2022	.6202
1.770	3.95	0.10	4.20	3.61	.2542	.0534	-.0396	-.3456	.2011	-.2072
1.770	3.88	0.10	5.88	3.60	.2539	.0527	-.0431	-.3740	.2121	-.2939
1.770	3.75	0.22	7.55	5.05	.2398	.0499	-.0445	-.4250	.2112	.3979
1.770	3.80	0.25	7.55	7.53	.2269	.0493	-.0381	-.2268	.1863	.1006
1.770	3.77	0.26	5.88	7.55	.2334	.0493	-.0417	-.2878	.1920	.5927
1.770	3.77	0.32	4.20	7.55	.2384	.0501	-.0433	-.4623	.1657	1.7672
1.770	3.81	0.33	2.54	7.56	.2423	.0511	-.0426	-.3506	.1559	1.4927
1.770	3.88	0.33	0.84	7.55	.2425	.0517	-.0393	-.1910	.1899	.8521
1.770	3.77	0.32	0.84	10.03	.2372	.0499	-.0427	.0107	.2024	-.0170
1.770	3.77	0.33	2.54	10.03	.2313	.0493	-.0408	-.0724	.1941	.3716
1.770	3.80	0.36	4.20	10.01	.2269	.0493	-.0379	-.1558	.1808	.6816
1.770	3.82	0.37	5.88	10.02	.2249	.0494	-.0362	-.3279	.1660	1.3943
1.770	3.82	0.35	7.55	10.03	.2250	.0494	-.0363	-.3380	.1753	1.1915
1.770	3.83	0.33	7.55	12.55	.2250	.0497	-.0359	-.1496	.1821	.6916
1.770	3.83	0.30	5.88	12.56	.2257	.0497	-.0360	-.0666	.1985	.3569
1.770	3.82	0.32	4.20	12.54	.2243	.0494	-.0362	.0222	.2063	-.0337
1.770	3.82	0.30	2.53	12.56	.2251	.0495	-.0363	.0105	.2050	.0238
1.770	3.80	0.32	0.84	12.54	.2259	.0494	-.0376	.0341	.2038	-.0641
1.770	3.82	0.28	0.85	15.07	.2250	.0496	-.0362	.0759	.2086	-.2790
1.770	3.83	0.30	2.54	15.06	.2253	.0496	-.0360	.0758	.2089	-.2791
1.770	3.84	0.31	4.20	15.06	.2281	.0503	-.0363	.0458	.2069	-.0944

TABLE II.- AERODYNAMIC CHARACTERISTICS OF RETURN COMPONENT AND BOMB POD WITH MUTUAL INTERFERENCE; $\beta_P = 0^o$; $\beta_R = 0^o$ - Continued

M	α_R, deg	α_P, deg	x_a, in.	z_a, in.	$C_{L,R}$	$C_{D,R}'$	$C_{m,R}$	$C_{L,P}$	$C_{D,P}'$	$C_{m,P}$
1.770	3.83	0.31	5.87	15.06	.2251	.0497	-.0359	.0221	.2045	-.0064
1.770	3.83	0.30	7.55	15.06	.2248	.0497	-.0358	.0226	.1987	-.0610
1.770	4.00	0.31	0.01	3.40	.2315	.0522	-.0302	-.7321	.1671	2.8395
1.770	3.88	0.23	4.20	5.06	.2475	.0522	-.0413	-.2825	.1916	.2629
1.770	3.90	0.34	0.84	7.55	.2443	.0520	-.0394	-.1603	.1887	.8342
1.770	3.82	-4.80	7.55	15.08	.2238	.0496	-.0357	-.3786	.2516	.3923
1.770	3.83	-4.83	5.87	15.10	.2254	.0497	-.0360	-.3716	.2611	.3635
1.770	3.83	-4.81	4.19	15.09	.2244	.0497	-.0358	-.3719	.2596	.3907
1.770	3.83	-4.84	2.51	15.10	.2248	.0495	-.0359	-.3066	.2539	.0742
1.770	3.82	-4.79	0.83	15.06	.2258	.0495	-.0363	-.3066	.2559	.0605
1.770	3.81	-4.79	0.83	12.56	.2269	.0495	-.0375	-.3724	.2547	.3907
1.770	3.82	-4.82	2.51	12.56	.2251	.0494	-.0363	-.3661	.2545	.3346
1.770	3.82	-4.83	4.19	12.57	.2244	.0494	-.0363	-.3788	.2459	.3922
1.770	3.83	-4.84	5.87	12.58	.2255	.0498	-.0360	-.5099	.2489	.9981
1.770	3.83	-4.78	7.55	12.57	.2254	.0498	-.0359	-.6729	.2420	1.7774
1.770	3.82	-4.82	7.55	10.08	.2243	.0494	-.0362	-.6967	.2635	1.4275
1.770	3.82	-4.76	5.87	10.07	.2250	.0495	-.0363	-.8132	.2534	2.3279
1.770	3.81	-4.78	4.19	10.07	.2263	.0495	-.0374	-.6293	.2368	1.5306
1.770	3.76	-4.81	2.51	10.08	.2315	.0492	-.0413	-.5269	.2544	1.0564
1.770	3.76	-4.80	0.83	10.06	.2404	.0501	-.0445	-.3664	.2517	.2940
1.770	3.86	-4.84	0.84	7.63	.2466	.0519	-.0416	-.6416	.2443	1.5369
1.770	3.79	-4.78	2.51	7.62	.2459	.0509	-.0449	-.8857	.2502	2.7145
1.770	3.74	-4.82	4.19	7.60	.2386	.0497	-.0446	-.8398	.2724	2.1323
1.770	3.75	-4.89	5.87	7.59	.2314	.0490	-.0418	-.6458	.2781	.8175
1.770	3.80	-4.91	7.55	7.60	.2256	.0492	-.0375	-.7343	.2783	1.1249
1.770	3.73	-4.94	7.52	5.11	.2418	.0497	-.0463	-.8291	.3046	.8108
1.770	3.77	-4.92	5.87	5.13	.2480	.0510	-.0466	-.9037	.2938	1.5367
1.770	3.85	-4.89	4.19	5.12	.2530	.0523	-.0439	-.7864	.2851	1.1665
1.770	3.95	-4.85	2.51	5.13	.2545	.0532	-.0398	-.9540	.3028	2.2846
1.770	4.04	-4.75	0.77	5.13	.2511	.0537	-.0339	-1.2242	.2604	4.0278
1.770	4.05	-4.72	0.00	5.12	.2469	.0536	-.0322	-1.2740	.2523	4.4893
1.770	4.07	-4.93	2.52	3.46	.2609	.0550	-.0358	-.9342	.3280	1.3159
1.770	3.96	-4.98	4.20	3.49	.2627	.0540	-.0419	-.8444	.3096	.5987
1.770	3.86	-5.02	5.87	3.46	.2617	.0531	-.0466	-.7945	.3168	.0143
1.770	3.77	-5.04	7.55	3.44	.2556	.0518	-.0489	-.6163	.3630	-.9700
1.770	3.79	-5.04	7.55	3.45	.2571	.0520	-.0490	-.5749	.3557	-1.0226
1.770	3.71	-8.07	7.55	5.15	.2416	.0493	-.0473	-1.1453	.4184	.8632
1.770	3.74	-7.99	5.87	5.17	.2508	.0507	-.0485	-1.2641	.4119	1.9549
1.770	3.82	-7.98	4.20	5.17	.2568	.0523	-.0466	-1.1365	.3919	1.7174
1.770	3.94	-7.88	2.51	5.15	.2582	.0534	-.0412	-1.2212	.4046	2.3929
1.770	4.04	-7.83	0.84	5.17	.2559	.0539	-.0359	-1.5102	.3857	4.3157
1.770	4.05	-7.82	0.01	5.20	.2551	.0543	-.0351	-1.6019	.3846	5.0057
1.770	3.83	-9.94	0.84	7.67	.2569	.0525	-.0463	-1.1960	.4160	2.2250
1.770	3.74	-9.94	2.52	7.69	.2493	.0505	-.0481	-1.4772	.4679	3.5382
1.770	3.71	-9.98	4.19	7.66	.2399	.0493	-.0464	-1.2752	.4674	2.1538
1.770	3.74	-10.05	5.88	7.66	.2312	.0488	-.0422	-1.1316	.4438	1.0276
1.770	3.80	-10.06	7.56	7.67	.2253	.0491	-.0372	-1.3355	.4788	1.8301
1.770	3.81	-10.06	7.56	10.19	.2234	.0492	-.0361	-1.1222	.4403	1.4594
1.770	3.82	-9.99	5.89	10.19	.2252	.0494	-.0366	-1.2990	.4477	2.6617
1.770	3.81	-9.96	4.20	10.18	.2266	.0494	-.0371	-1.2617	.4269	2.6783
1.770	3.75	-9.98	2.49	10.19	.2321	.0491	-.0420	-1.0692	.4195	1.7301
1.770	3.73	-9.94	0.83	10.14	.2402	.0497	-.0459	-.9445	.4088	1.1668
1.770	3.81	-9.97	0.83	12.63	.2250	.0494	-.0369	-.8658	.4104	.7794
1.770	3.82	-10.00	2.52	12.64	.2246	.0494	-.0363	-.8356	.4083	.5811
1.770	3.82	-9.92	4.19	12.61	.2249	.0494	-.0363	-.9509	.4074	1.1956
1.770	3.83	-9.95	5.88	12.63	.2252	.0497	-.0358	-1.0294	.4066	1.5424
1.770	3.82	-9.93	7.55	12.64	.2241	.0497	-.0358	-1.2421	.4340	2.5376
1.770	3.82	-9.96	7.55	15.15	.2239	.0497	-.0357	-.9323	.4105	1.1229
1.770	3.82	-10.01	5.89	15.17	.2236	.0496	-.0357	-.8359	.4085	.6221
1.770	3.82	-9.95	4.19	15.14	.2232	.0496	-.0356	-.8657	.4118	.7931
1.770	3.83	-10.00	2.52	15.16	.2252	.0496	-.0359	-.8302	.4048	.5930
1.770	3.82	-9.95	0.83	15.12	.2249	.0494	-.0363	-.7835	.3981	.3900
1.770	4.15	1.59	2.51	1.25	.2388	.0539	-.0248	-.2895	.2209	-.9975
1.770	4.08	1.63	1.67	1.25	.2315	.0526	-.0260	-.3873	.2085	-.0613
1.770	3.99	1.69	0.84	1.23	.2225	.0510	-.0273	-.4437	.1932	.6870
1.770	3.91	1.74	0.00	1.21	.2156	.0496	-.0289	-.4811	.1636	1.3345
1.770	3.87	3.72	0.00	0.54	.2102	.0487	-.0287	-.2400	.1548	.4281
1.770	3.93	3.72	0.83	0.51	.2143	.0496	-.0271	-.1808	.1936	-.2409
1.770	4.01	3.65	1.67	0.54	.2210	.0510	-.0255	-.1130	.2003	-.9254
1.770	4.11	3.64	2.52	1.22	.2364	.0535	-.0257	-.1403	.1959	-1.1218
1.770	4.04	3.65	1.67	1.23	.2270	.0519	-.0263	-.2200	.1830	-.2848
1.770	3.96	3.72	0.84	1.21	.2196	.0506	-.0275	-.2816	.1688	.4523
1.770	3.89	3.79	-0.01	1.19	.2136	.0494	-.0291	-.3244	.1401	1.1299
1.770	3.86	6.84	0.00	1.18	.2104	.0491	-.0295	-.0848	.1430	.9155
1.770	3.92	6.80	0.84	1.18	.2152	.0499	-.0282	-.0247	.1665	.1108
1.770	3.99	6.75	1.68	1.19	.2240	.0513	-.0275	.0366	.1808	-.6666
1.770	4.06	6.69	2.51	1.21	.2327	.0527	-.0272	.0849	.2024	-1.3182
1.770	5.52	12.62	0.88	2.05	.2842	.0633	-.0465	.3645	.2365	1.0646
1.770	5.59	12.54	1.73	2.04	.2916	.0649	-.0457	.4444	.2584	-.1797
1.770	5.65	12.42	2.55	2.07	.3000	.0664	-.0454	.4916	.2619	-1.1837

TABLE II.- AERODYNAMIC CHARACTERISTICS OF RETURN COMPONENT AND BOMB POD WITH MUTUAL INTERFERENCE; $\beta_P = 0^o$; $\beta_R = 0^o$ - Continued

M	α_R, deg	α_P, deg	x_a, in.	z_a, in.	$C_{L,R}$	$C'_{D,R}$	$C_{m,R}$	$C_{L,P}$	$C'_{D,P}$	$C_{m,P}$
1.770	5.73	12.33	4.24	2.09	.3129	.0689	-.0459	.3816	.2745	-1.9304
1.770	5.55	12.27	7.58	3.39	.3170	.0669	-.0561	.5245	.4122	-2.1110
1.770	5.60	12.33	5.91	3.37	.3152	.0670	-.0533	.4026	.3000	-1.4077
1.770	5.63	12.38	4.24	3.36	.3121	.0672	-.0504	.5475	.2858	-1.4444
1.770	5.62	12.52	2.55	3.33	.3028	.0664	-.0478	.5662	.2957	-.1587
1.770	5.60	12.63	1.73	3.31	.2962	.0657	-.0465	.5589	.3045	.7119
1.770	5.56	12.69	0.88	3.30	.2882	.0642	-.0458	.5129	.2984	1.6204
1.770	5.63	12.70	2.56	4.99	.3034	.0662	-.0479	.5756	.3152	1.4408
1.770	5.57	12.56	4.24	5.01	.3067	.0659	-.0516	.6554	.3199	-.0869
1.770	5.53	12.45	5.92	5.02	.3102	.0659	-.0548	.5910	.2894	-.9394
1.770	5.48	12.39	7.58	5.05	.3088	.0650	-.0571	.4230	.2991	-.8827
1.770	5.47	10.45	7.58	7.52	.3000	.0639	-.0546	.5314	.2743	-.6105
1.770	5.47	10.36	7.57	5.01	.3099	.0652	-.0577	.2424	.2540	-.7249
1.770	5.52	10.34	5.89	5.04	.3105	.0659	-.0553	.3533	.2272	-.7256
1.770	5.57	10.49	4.22	5.00	.3084	.0661	-.0521	.4247	.2613	-.1342
1.770	5.63	10.58	2.55	5.00	.3057	.0665	-.0485	.2739	.2341	1.3057
1.770	5.63	10.59	0.86	5.01	.2992	.0659	-.0462	.2630	.2107	1.8939
1.770	5.62	10.61	0.02	4.98	.2957	.0654	-.0457	.4244	.2492	1.2385
1.770	5.54	10.65	0.03	3.26	.2864	.0637	-.0463	.2447	.2209	1.6541
1.770	5.59	10.59	0.86	3.30	.2927	.0650	-.0461	.2220	.2210	1.5512
1.770	5.62	10.53	1.71	3.32	.2990	.0661	-.0467	.2785	.2292	.7346
1.770	5.64	10.46	2.57	3.33	.3060	.0670	-.0481	.3203	.2234	-.1457
1.770	5.64	10.34	4.22	3.35	.3148	.0675	-.0510	.3503	.2294	-1.2822
1.770	5.60	10.30	5.90	3.37	.3185	.0674	-.0541	.2113	.2484	-1.1925
1.770	5.55	10.31	7.58	3.35	.3188	.0671	-.0569	.3624	.3774	-1.8771
1.770	5.76	10.28	4.22	2.10	.3161	.0693	-.0457	.2053	.2329	-1.6522
1.770	5.68	10.37	2.55	2.07	.3024	.0669	-.0449	.3085	.2254	-1.1211
1.770	5.62	10.44	1.71	2.06	.2961	.0655	-.0456	.2341	.2133	-.1497
1.770	5.55	10.51	0.86	2.04	.2868	.0639	-.0462	.1430	.1924	.9355
1.770	5.49	10.60	0.02	2.02	.2808	.0626	-.0468	.0857	.1803	1.9973
1.770	5.46	8.44	5.90	7.52	.3049	.0644	-.0566	.2743	.2229	.2465
1.770	5.48	8.49	4.22	7.53	.3081	.0652	-.0567	.1799	.1885	1.2759
1.770	5.54	8.54	2.56	7.52	.3097	.0660	-.0544	.3339	.2279	.8673
1.770	5.58	8.51	0.86	7.51	.3061	.0661	-.0509	.5703	.2858	-.1054
1.770	5.56	5.37	0.01	2.10	.2858	.0638	-.0452	-.4099	.1199	2.1460
1.770	5.64	5.33	0.85	2.11	.2942	.0655	-.0444	-.3200	.1465	1.2784
1.770	5.70	5.26	1.68	2.12	.3015	.0670	-.0438	-.2393	.1521	.3453
1.770	5.74	5.19	2.51	2.14	.3083	.0684	-.0437	-.2006	.1576	-.3043
1.770	5.80	5.13	4.19	2.15	.3219	.0705	-.0456	-.1927	.1905	-1.0817
1.770	5.52	5.13	7.54	3.41	.3204	.0672	-.0589	.0024	.2972	-1.3929
1.770	5.59	5.16	5.86	3.41	.3220	.0679	-.0558	-.1895	.1811	-.5379
1.770	5.65	5.20	4.20	3.39	.3202	.0683	-.0524	-.1113	.1533	-.5716
1.770	5.68	5.23	2.51	3.41	.3135	.0681	-.0485	-.1405	.1660	.2104
1.770	5.66	5.31	1.68	3.38	.3071	.0673	-.0473	-.2311	.1520	.9680
1.770	5.64	5.39	0.84	3.35	.2997	.0662	-.0461	-.3323	.1231	1.8238
1.770	5.60	5.40	0.01	3.36	.2945	.0652	-.0462	-.4158	.1034	2.5250
1.770	5.65	5.50	0.01	5.00	.3012	.0666	-.0458	-.2762	.1019	2.4735
1.770	5.67	5.45	0.85	5.04	.3070	.0673	-.0470	-.3582	.0995	2.6988
1.770	5.64	5.42	2.52	5.02	.3116	.0670	-.0501	-.2450	.1380	1.5547
1.770	5.57	5.33	4.19	5.03	.3136	.0666	-.0540	-.0299	.1684	.0586
1.770	5.52	5.29	5.86	5.04	.3163	.0664	-.0576	-.1504	.1510	.1993
1.770	5.45	5.23	7.54	5.05	.3113	.0650	-.0592	-.1756	.1890	-.0660
1.770	5.46	5.32	7.55	7.53	.2995	.0637	-.0548	.0575	.1783	-.1414
1.770	5.45	5.36	5.86	7.53	.3054	.0643	-.0573	.0253	.1811	.3014
1.770	5.47	5.38	4.19	7.56	.3092	.0650	-.0576	-.1122	.1498	1.5043
1.770	5.52	5.45	2.52	7.53	.3090	.0659	-.0552	-.0371	.1526	1.4975
1.770	5.58	5.41	0.84	7.54	.3101	.0664	-.0524	.2431	.2048	.2968
1.770	5.48	5.45	0.85	10.00	.3083	.0651	-.0570	.4220	.2578	-.4703
1.770	5.46	5.45	2.52	10.00	.3050	.0644	-.0567	.3999	.2362	-.3688
1.770	5.47	5.43	4.19	10.02	.2999	.0639	-.0544	.2555	.2020	.2259
1.770	5.50	5.44	5.86	10.03	.2960	.0639	-.0518	-.0080	.1625	1.3139
1.770	5.50	5.40	7.55	10.03	.2947	.0638	-.0514	.0171	.1702	.8733
1.770	5.62	0.25	0.01	2.15	.2941	.0652	-.0449	-.8713	.1728	2.7530
1.770	5.71	0.19	0.84	2.16	.3010	.0670	-.0432	-.7918	.1990	1.9728
1.770	5.79	0.14	1.70	2.18	.3113	.0691	-.0426	-.7116	.2040	1.1652
1.770	5.83	0.08	2.54	2.19	.3163	.0701	-.0424	-.6310	.2148	.2618
1.770	5.85	-0.01	4.20	2.20	.3307	.0719	-.0461	-.5310	.2444	-.9715
1.770	5.50	0.02	7.55	3.44	.3265	.0677	-.0619	-.3283	.2985	-1.1742
1.770	5.58	0.03	5.88	3.47	.3278	.0684	-.0585	-.5660	.2147	.0418
1.770	5.66	0.07	4.20	3.46	.3262	.0689	-.0539	-.5617	.1792	.3516
1.770	5.73	0.09	2.54	3.48	.3237	.0696	-.0497	-.5766	.1956	.8456
1.770	5.72	0.13	1.69	3.47	.3145	.0687	-.0472	-.6677	.1848	1.5747
1.770	5.70	0.21	0.84	3.44	.3083	.0677	-.0460	-.7830	.1775	2.4595
1.770	5.66	0.28	0.01	3.42	.3030	.0668	-.0460	-.9101	.1396	3.4155
1.770	5.70	0.39	0.01	5.07	.3083	.0676	-.0460	-.8607	.1095	3.8621
1.770	5.70	0.36	0.84	5.08	.3131	.0681	-.0474	-.8532	.1186	3.5622
1.770	5.64	0.27	2.54	5.08	.3178	.0678	-.0519	-.6476	.1760	2.0163
1.770	5.57	0.21	4.20	5.08	.3201	.0676	-.0562	-.4490	.1826	.6610
1.770	5.49	0.23	5.88	5.06	.3188	.0665	-.0598	-.5662	.1791	.9635
1.770	5.43	0.18	7.55	5.06	.3131	.0649	-.0609	-.5464	.2121	.4972

TABLE II.- AERODYNAMIC CHARACTERISTICS OF RETURN COMPONENT AND BOMB POD WITH MUTUAL INTERFERENCE; $\beta_P = 0^o$; $\beta_R = 0^o$ - Continued

M	α_R, deg	α_P, deg	x_a, in.	z_a, in.	$C_{L,R}$	$C_{D',R}$	$C_{m,R}$	$C_{L,P}$	$C_{D',P}$	$C_{m,P}$
1.770	5.46	0.23	7.55	7.55	.2993	.0636	-.0546	-.4267	.1805	.8042
1.770	5.43	0.24	5.88	7.55	.3052	.0639	-.0580	-.3332	.1801	.5490
1.770	5.45	0.31	4.20	7.56	.3113	.0650	-.0593	-.5259	.1605	1.9032
1.770	5.51	0.33	2.54	7.58	.3147	.0664	-.0575	-.5403	.1442	2.4228
1.770	5.58	0.35	0.84	7.53	.3129	.0668	-.0536	-.2500	.1633	1.1102
1.770	5.45	0.33	0.84	10.03	.3095	.0650	-.0586	.0044	.2090	.0389
1.770	5.45	0.33	2.54	10.03	.3052	.0641	-.0574	-.1020	.1907	.5015
1.770	5.47	0.39	4.20	10.02	.2986	.0637	-.0541	-.3217	.1620	1.5237
1.770	5.50	0.38	5.88	10.03	.2963	.0639	-.0517	-.4631	.1569	1.9823
1.770	5.50	0.33	7.55	10.03	.2967	.0639	-.0518	-.3538	.1679	1.0846
1.770	5.50	0.33	7.55	12.57	.2949	.0640	-.0511	-.3337	.1633	1.6086
1.770	5.50	0.31	5.88	12.56	.2950	.0638	-.0513	-.0905	.1857	.4987
1.770	5.50	0.30	4.20	12.55	.2957	.0639	-.0516	.0104	.2076	.0238
1.770	5.50	0.30	2.54	12.55	.2960	.0640	-.0516	.0104	.2104	.0238
1.770	5.47	0.30	0.84	12.55	.2991	.0639	-.0541	.0460	.2084	-.1215
1.770	5.50	0.28	0.84	15.06	.2956	.0639	-.0515	.0700	.2109	-.2772
1.770	5.51	0.28	2.54	15.07	.2963	.0640	-.0514	.0758	.2110	-.2652
1.770	5.50	0.31	4.20	15.05	.2951	.0640	-.0512	.0518	.2077	-.1367
1.770	5.50	0.31	5.87	15.05	.2950	.0640	-.0511	.0221	.2053	-.0064
1.770	5.51	0.31	7.55	15.06	.2967	.0643	-.0514	.0164	.1972	-.0050
1.770	5.50	-4.80	7.55	15.08	.2949	.0639	-.0511	-.4020	.2498	.5201
1.770	5.51	-4.80	5.87	15.08	.2950	.0640	-.0511	-.3829	.2637	.4069
1.770	5.51	-4.81	4.19	15.08	.2963	.0641	-.0513	-.3651	.2627	.3613
1.770	5.51	-4.84	2.51	15.09	.2960	.0639	-.0514	-.3116	.2589	.0756
1.770	5.50	-4.79	0.83	15.06	.2964	.0640	-.0518	-.3059	.2586	.0604
1.770	5.47	-4.77	0.83	12.54	.2986	.0637	-.0539	-.3720	.2531	.3902
1.770	5.50	-4.82	2.49	12.57	.2968	.0640	-.0518	-.3775	.2563	.4053
1.770	5.50	-4.83	4.19	12.57	.2967	.0640	-.0518	-.4020	.2468	.4930
1.770	5.50	-4.82	5.87	12.58	.2957	.0639	-.0513	-.5766	.2345	1.3946
1.770	5.51	-4.78	7.55	12.59	.2954	.0642	-.0511	-.8316	.2491	2.5348
1.770	5.50	-4.83	7.55	10.08	.2958	.0638	-.0517	-.7260	.2569	1.4346
1.770	5.50	-4.76	5.87	10.08	.2968	.0641	-.0518	-.8833	.2598	2.5761
1.770	5.47	-4.74	4.19	10.08	.2986	.0639	-.0538	-.8622	.2398	2.7050
1.770	5.44	-4.80	2.51	10.08	.3061	.0642	-.0582	-.5753	.2466	1.3401
1.770	5.43	-4.79	0.83	10.06	.3109	.0649	-.0602	-.3835	.2559	.3798
1.770	5.56	-4.81	0.84	7.64	.3190	.0672	-.0561	-.8025	.2346	2.3633
1.770	5.48	-4.76	2.51	7.63	.3191	.0664	-.0602	-1.0747	.2611	3.5757
1.770	5.42	-4.85	4.19	7.63	.3127	.0647	-.0610	-.8963	.2841	2.2397
1.770	5.42	-4.94	5.87	7.63	.3052	.0636	-.0586	-.7634	.2718	1.1727
1.770	5.46	-4.92	7.55	7.61	.2981	.0636	-.0542	-.9102	.2822	1.6325
1.770	5.39	-4.96	7.52	5.10	.3143	.0648	-.0628	-.9611	.3192	.9278
1.770	5.45	-4.95	5.87	5.14	.3214	.0664	-.0625	-1.0372	.2969	1.7071
1.770	5.54	-4.91	4.20	5.13	.3251	.0677	-.0591	-.9856	.2927	1.7481
1.770	5.63	-4.87	2.51	5.13	.3223	.0682	-.0539	-1.0467	.3074	2.4707
1.770	5.72	-4.75	0.84	5.12	.3199	.0688	-.0488	-1.3288	.2711	4.3919
1.770	5.72	-4.71	0.00	5.12	.3170	.0688	-.0480	-1.4035	.2510	5.0346
1.770	5.76	-4.93	2.52	3.46	.3322	.0710	-.0508	-1.1338	.3263	1.7756
1.770	5.66	-5.00	4.20	3.51	.3351	.0698	-.0568	-1.1434	.3259	1.4899
1.770	5.55	-5.10	5.88	3.49	.3362	.0692	-.0625	-.9599	.3371	.0713
1.770	5.45	-5.11	7.55	3.46	.3316	.0675	-.0656	-.7703	.3782	-1.0093
1.770	5.41	-5.00	7.52	5.14	.3169	.0650	-.0632	-.9298	.3148	.8862
1.770	5.42	-5.75	7.46	3.98	.3285	.0667	-.0664	-.9172	.3786	-.2902
1.770	5.42	-8.04	5.87	5.18	.3254	.0661	-.0651	-1.3949	.4280	2.0146
1.770	5.52	-8.00	4.20	5.18	.3306	.0682	-.0622	-1.3227	.4088	2.2253
1.770	5.65	-7.89	2.51	5.15	.3301	.0691	-.0557	-1.3253	.4105	2.6744
1.770	5.71	-7.83	0.84	5.18	.3276	.0696	-.0517	-1.6309	.4038	4.7507
1.770	5.73	-7.79	0.00	5.19	.3279	.0700	-.0512	-1.7129	.3890	5.4641
1.770	5.53	-9.90	0.84	7.70	.3277	.0679	-.0605	-1.5169	.4472	3.9650
1.770	5.44	-9.94	2.52	7.70	.3246	.0662	-.0643	-1.5688	.4845	3.9126
1.770	5.39	-9.99	4.19	7.67	.3159	.0645	-.0635	-1.3366	.4773	2.3165
1.770	5.40	-10.05	5.88	7.67	.3056	.0634	-.0595	-1.3476	.4649	1.8850
1.770	5.47	-10.08	7.56	7.68	.2979	.0636	-.0536	-1.5136	.4989	2.2414
1.770	5.49	-10.09	7.56	10.21	.2949	.0638	-.0517	-1.2035	.4403	1.6957
1.770	5.49	-10.00	5.89	10.19	.2952	.0638	-.0518	-1.3285	.4634	2.6652
1.770	5.48	-9.96	4.20	10.20	.2979	.0638	-.0535	-1.4530	.4528	3.5781
1.770	5.41	-9.98	2.52	10.18	.3038	.0635	-.0586	-1.1349	.4083	2.0418
1.770	5.40	-9.93	0.83	10.14	.3139	.0646	-.0626	-.9653	.4137	1.2652
1.770	5.48	-9.98	0.84	12.64	.2982	.0637	-.0536	-.8682	.4148	.8327
1.770	5.50	-10.01	2.52	12.65	.2953	.0638	-.0516	-.8448	.4083	.6637
1.770	5.49	-9.94	4.19	12.62	.2946	.0636	-.0515	-.9658	.4089	1.3050
1.770	5.50	-9.91	5.88	12.64	.2953	.0640	-.0512	-1.2584	.4269	2.7788
1.770	5.51	-9.90	7.55	12.63	.2959	.0643	-.0512	-1.3370	.4518	2.9896
1.770	5.51	-9.97	7.55	15.16	.2958	.0642	-.0512	-.9544	.4030	1.2608
1.770	5.50	-10.01	5.88	15.17	.2950	.0640	-.0512	-.8380	.4114	.6888
1.770	5.51	-9.95	4.19	15.14	.2960	.0641	-.0513	-.8617	.4126	.8167
1.770	5.51	-9.97	2.51	15.14	.2955	.0638	-.0513	-.8058	.4016	.5161
1.770	5.50	-10.00	0.83	15.15	.2958	.0638	-.0517	-.7897	.4042	.3912
1.770	5.58	3.79	-0.01	1.20	.2863	.0638	-.0445	-.5004	.1325	1.7580
1.770	5.64	3.71	0.83	1.21	.2902	.0649	-.0427	-.4628	.1571	1.0016
1.770	5.73	3.64	1.67	1.23	.2980	.0667	-.0410	-.3883	.1713	.0728

TABLE II.- AERODYNAMIC CHARACTERISTICS OF RETURN COMPONENT AND BOMB POD WITH MUTUAL INTERFERENCE; $\beta_P = 0^o$; $\beta_R = 0^o$ - Continued

M	α_R, deg	α_P, deg	x_a, in.	z_a, in.	$C_{L,R}$	$C'_{D,R}$	$C_{m,R}$	$C_{L,P}$	$C'_{D,P}$	$C_{m,P}$
1.770	5.82	3.60	2.52	1.23	.3067	.0686	-.0395	-.2730	.1904	-1.0163
1.770	5.55	5.76	0.00	0.52	.2794	.0629	-.0439	-.2813	.1253	.8037
1.770	5.61	5.73	0.83	0.51	.2844	.0639	-.0424	-.1931	.1657	-.0883
1.770	5.68	5.70	1.68	0.51	.2883	.0649	-.0403	-.1083	.1814	-.9380
1.770	5.78	5.62	2.51	1.23	.3031	.0681	-.0403	-.1179	.1831	-1.2072
1.770	5.71	5.71	1.68	1.20	.2964	.0663	-.0417	-.2266	.1557	-.1201
1.770	5.63	5.74	0.83	1.21	.2888	.0646	-.0431	-.2994	.1348	.7676
1.770	5.56	5.81	0.00	1.19	.2818	.0632	-.0442	-.3244	.1102	1.4795
1.770	5.73	8.68	2.55	1.21	.3013	.0673	-.0421	.1124	.1932	-1.4458
1.770	5.66	8.74	1.69	1.19	.2920	.0653	-.0428	.0568	.1767	-.5763
1.770	5.59	8.86	0.85	1.16	.2849	.0639	-.0437	-.0159	.1530	.3930
1.770	5.53	8.90	0.01	1.16	.2792	.0628	-.0447	-.0411	.1377	1.1189
2.010	0.12	13.09	0.89	2.03	.0625	.0322	-.0003	1.0302	.4389	.1687
2.010	0.15	13.10	1.73	2.02	.0689	.0324	-.0006	.9214	.4122	.4246
2.010	0.17	13.03	2.56	2.04	.0735	.0325	-.0012	.8467	.3952	.3701
2.010	0.17	12.95	4.25	2.05	.0780	.0321	-.0027	.9025	.4168	-.7857
2.010	0.08	12.89	7.59	3.32	.0751	.0315	-.0067	1.0363	.4969	-1.6917
2.010	0.10	12.94	5.92	3.32	.0746	.0316	-.0054	.9634	.4429	-.7570
2.010	0.13	13.01	4.25	3.32	.0744	.0318	-.0039	.9101	.4155	.2172
2.010	0.16	13.11	2.57	3.28	.0732	.0321	-.0018	.9912	.4276	.5906
2.010	0.16	13.09	1.73	3.30	.0705	.0321	-.0007	1.0643	.4587	.5090
2.010	0.16	13.10	0.89	3.29	.0685	.0324	.0001	1.1282	.5010	.3985
2.010	0.13	13.09	2.56	4.96	.0752	.0320	-.0040	1.2565	.5412	-.3220
2.010	0.10	13.08	4.25	4.98	.0742	.0316	-.0054	1.1653	.4954	.0699
2.010	0.08	13.05	5.93	4.97	.0729	.0314	-.0063	1.0486	.4572	-.0952
2.010	0.07	13.00	7.59	5.00	.0710	.0314	-.0061	1.0322	.4568	-.5932
2.010	0.08	10.96	7.58	7.49	.0652	.0312	-.0036	.8629	.3918	.0939
2.010	0.06	10.89	7.59	4.97	.0698	.0313	-.0061	.7483	.3573	-.5593
2.010	0.07	10.90	5.90	5.01	.0718	.0314	-.0064	.7145	.3399	.1659
2.010	0.09	10.98	4.23	4.98	.0752	.0317	-.0060	.8130	.3719	.3211
2.010	0.12	10.50	2.50	5.24	.0761	.0319	-.0051	.8304	.3799	-.1559
2.010	0.15	10.93	0.86	4.99	.0744	.0321	-.0026	.9106	.4011	-.3151
2.010	0.16	10.95	0.02	4.97	.0720	.0320	-.0013	.9433	.4047	-.4303
2.010	0.16	11.03	0.03	3.27	.0663	.0324	.0006	.7891	.3867	.4787
2.010	0.17	11.04	0.87	3.27	.0705	.0324	-.0001	.7964	.3823	.5230
2.010	0.17	11.04	1.71	3.28	.0728	.0323	-.0010	.7291	.3477	.7405
2.010	0.16	11.01	2.57	3.30	.0759	.0321	-.0025	.6409	.3197	.9016
2.010	0.13	10.95	4.22	3.30	.0761	.0319	-.0044	.6123	.3172	.3463
2.010	0.10	10.87	5.90	3.31	.0754	.0316	-.0059	.6993	.3471	-.7443
2.010	0.08	10.83	7.59	3.31	.0760	.0315	-.0073	.7744	.3951	-1.5432
2.010	0.17	10.86	4.23	2.07	.0798	.0322	-.0032	.6377	.3254	-.7578
2.010	0.19	10.95	2.55	2.04	.0770	.0326	-.0015	.5438	.2934	.4724
2.010	0.17	10.93	1.71	2.07	.0717	.0325	-.0007	.5561	.2910	.7433
2.010	0.14	10.98	0.87	2.02	.0653	.0324	-.0001	.6970	.3218	.4001
2.010	0.11	11.00	0.03	2.01	.0596	.0320	.0000	.8159	.3654	.1229
2.010	0.07	8.87	5.90	7.50	.0665	.0314	-.0042	.6556	.3123	-.1977
2.010	0.06	8.87	4.22	7.49	.0685	.0312	-.0057	.6690	.3144	-.2623
2.010	0.06	8.89	2.56	7.49	.0712	.0313	-.0067	.7331	.3287	-.4020
2.010	0.08	8.87	0.86	7.50	.0754	.0315	-.0068	.7845	.3410	-.5074
2.010	0.16	5.75	0.02	2.10	.0663	.0324	.0007	.1746	.2120	.6203
2.010	0.20	5.78	0.85	2.09	.0746	.0330	.0002	.0375	.1891	1.0383
2.010	0.22	5.70	1.68	2.14	.0804	.0330	-.0008	-.0198	.1824	.9779
2.010	0.22	5.70	2.52	2.12	.0842	.0329	-.0021	.0215	.1894	.4635
2.010	0.18	5.64	4.20	2.12	.0859	.0324	-.0046	.2210	.2320	-.9018
2.010	0.06	5.65	7.55	3.36	.0766	.0313	-.0086	.3114	.2585	-1.1554
2.010	0.09	5.68	5.86	3.35	.0799	.0316	-.0078	.2591	.2342	-.7749
2.010	0.13	5.73	4.20	3.36	.0815	.0319	-.0062	.0922	.2015	.4140
2.010	0.17	5.75	2.52	3.38	.0814	.0321	-.0038	.0427	.1937	1.2052
2.010	0.19	5.78	1.68	3.36	.0805	.0324	-.0022	.0818	.1970	1.1488
2.010	0.21	5.81	0.85	3.34	.0792	.0327	-.0010	.1348	.2026	.8904
2.010	0.21	5.77	0.01	3.35	.0743	.0329	.0005	.1672	.2141	.7444
2.010	0.18	5.79	0.01	5.00	.0806	.0322	-.0032	.3389	.2394	-.0340
2.010	0.15	5.79	0.85	5.00	.0792	.0320	-.0042	.3125	.2343	.1105
2.010	0.12	5.82	2.52	4.98	.0797	.0319	-.0062	.2863	.2304	.1481
2.010	0.08	5.81	4.20	5.00	.0765	.0315	-.0074	.2066	.2225	.5356
2.010	0.06	5.77	5.86	5.00	.0735	.0311	-.0076	.1760	.2155	.3152
2.010	0.05	5.72	7.55	5.00	.0705	.0312	-.0067	.2785	.2253	-.6123
2.010	0.08	5.76	7.55	7.52	.0653	.0313	-.0038	.2663	.2298	.2602
2.010	0.07	5.78	5.87	7.50	.0650	.0313	-.0039	.3395	.2328	-.0337
2.010	0.06	5.75	4.20	7.52	.0685	.0312	-.0058	.3523	.2401	-.0831
2.010	0.05	5.78	2.52	7.51	.0728	.0313	-.0074	.4046	.2450	-.1887
2.010	0.07	5.76	0.84	7.52	.0770	.0315	-.0079	.4703	.2556	-.4506
2.010	0.07	5.82	0.85	9.99	.0677	.0313	-.0048	.4625	.2579	-.2960
2.010	0.08	5.78	2.52	9.85	.0653	.0313	-.0037	.4630	.2571	-.3418
2.010	0.08	5.78	4.20	9.86	.0661	.0313	-.0038	.4701	.2572	-.4352
2.010	0.08	5.77	5.87	10.02	.0661	.0313	-.0035	.4449	.2454	-.3672
2.010	0.08	5.79	7.55	10.01	.0653	.0315	-.0034	.3787	.2414	-.1360
2.010	0.22	0.64	0.01	2.13	.0734	.0331	.0016	-.3669	.1812	1.3477
2.010	0.24	0.64	0.84	2.14	.0810	.0333	.0005	-.4599	.1900	1.7078
2.010	0.26	0.61	1.70	2.15	.0875	.0332	-.0010	-.4050	.1988	1.1748

TABLE II.- AERODYNAMIC CHARACTERISTICS OF RETURN COMPONENT AND BOMB POD WITH MUTUAL INTERFERENCE; $\beta_P = 0^o$; $\beta_R = 0^o$ - Continued

M	α_R, deg	α_P, deg	x_a, in.	z_a, in.	$C_{L,R}$	$C'_{D,R}$	$C_{m,R}$	$C_{L,P}$	$C'_{D,P}$	$C_{m,P}$
2.010	0.25	0.58	2.54	2.16	.0910	.0331	-.0028	-.3298	.2056	.5447
2.010	0.19	0.53	4.20	2.15	.0909	.0328	-.0059	-.1342	.2290	-.7271
2.010	0.04	0.56	7.55	3.38	.0797	.0312	-.0103	-.0960	.2255	-.5701
2.010	0.08	0.51	5.88	3.41	.0834	.0315	-.0098	-.0960	.2147	-.5698
2.010	0.12	0.58	4.20	3.40	.0854	.0319	-.0078	-.2315	.2090	.3811
2.010	0.18	0.61	2.54	3.43	.0867	.0323	-.0053	-.4069	.1902	1.5709
2.010	0.20	0.62	1.69	3.43	.0862	.0325	-.0035	-.4474	.1761	1.8864
2.010	0.23	0.62	0.84	3.42	.0837	.0328	-.0013	-.4073	.1731	1.7377
2.010	0.24	0.64	0.01	3.40	.0806	.0329	.0004	-.3479	.1754	1.4937
2.010	0.17	0.68	0.01	5.04	.0828	.0323	-.0041	-.1225	.1957	.6108
2.010	0.15	0.67	0.84	5.04	.0825	.0321	-.0056	-.1420	.1897	.6463
2.010	0.10	0.65	2.54	5.05	.0824	.0318	-.0081	-.1946	.1851	.7822
2.010	0.06	0.67	4.20	5.04	.0791	.0314	-.0092	-.2610	.1951	1.0130
2.010	0.04	0.64	5.88	5.03	.0746	.0312	-.0089	-.1531	.2092	.2836
2.010	0.04	0.60	7.55	5.03	.0692	.0309	-.0068	-.0379	.2155	-.5694
2.010	0.07	0.68	7.55	7.52	.0649	.0312	-.0038	-.2012	.1964	.7685
2.010	0.08	0.67	5.88	7.53	.0667	.0312	-.0040	-.1350	.1814	.5682
2.010	0.06	0.67	4.20	7.52	.0684	.0312	-.0057	-.0888	.1918	.4035
2.010	0.04	0.67	2.54	7.53	.0719	.0311	-.0079	-.0495	.1942	.3320
2.010	0.05	0.67	0.84	7.53	.0765	.0313	-.0088	.0436	.1974	-.0734
2.010	0.07	0.72	0.84	10.00	.0667	.0313	-.0047	.0428	.1992	.0182
2.010	0.08	0.68	2.54	10.02	.0652	.0313	-.0037	.0366	.2029	-.0105
2.010	0.08	0.71	4.20	10.00	.0648	.0311	-.0036	.0500	.1998	-.1055
2.010	0.08	0.71	5.88	10.01	.0644	.0313	-.0032	-.0230	.1924	.2183
2.010	0.08	0.71	7.55	10.01	.0647	.0315	-.0033	-.0625	.1962	.3353
2.010	0.08	0.67	7.55	12.54	.0654	.0314	-.0034	.0434	.1994	-.0580
2.010	0.08	0.67	5.88	12.54	.0655	.0315	-.0034	.0366	.1991	.0047
2.010	0.09	0.65	4.20	12.55	.0659	.0314	-.0034	.0434	.1966	-.0276
2.010	0.08	0.67	2.54	12.54	.0644	.0314	-.0032	.0832	.1970	-.2057
2.010	0.08	0.65	0.84	12.55	.0652	.0313	-.0035	.0831	.1995	-.1905
2.010	0.08	0.64	0.84	15.06	.0644	.0314	-.0032	.0769	.2009	-.2193
2.010	0.08	0.66	2.54	15.06	.0656	.0314	-.0035	.0767	.2001	-.1888
2.010	0.08	0.66	4.20	15.05	.0652	.0314	-.0034	.0701	.2002	-.1718
2.010	0.08	0.66	5.88	15.05	.0652	.0314	-.0034	.0700	.1995	-.1718
2.010	0.09	0.66	7.55	15.06	.0659	.0314	-.0034	.0569	.1973	-.1378
2.010	0.08	-4.42	7.55	15.07	.0656	.0314	-.0034	-.3426	.2480	.2189
2.010	0.08	-4.44	5.87	15.08	.0660	.0314	-.0035	-.3092	.2473	.0576
2.010	0.08	-4.47	4.19	15.09	.0652	.0314	-.0034	-.3088	.2501	.0577
2.010	0.08	-4.47	2.51	15.09	.0652	.0314	-.0033	-.2959	.2485	.0389
2.010	0.09	-4.42	0.83	15.06	.0664	.0314	-.0035	-.2962	.2470	.0236
2.010	0.08	-4.41	0.83	12.54	.0656	.0312	-.0036	-.2966	.2443	.0542
2.010	0.08	-4.46	2.51	12.56	.0656	.0314	-.0034	-.3165	.2444	.1357
2.010	0.09	-4.47	4.19	12.57	.0664	.0314	-.0035	-.3496	.2474	.2818
2.010	0.08	-4.44	5.87	12.55	.0652	.0314	-.0033	-.3428	.2462	.2037
2.010	0.08	-4.46	7.55	12.56	.0652	.0314	-.0033	-.3294	.2433	.1240
2.010	0.08	-4.45	7.55	10.07	.0660	.0315	-.0035	-.4360	.2462	.5640
2.010	0.08	-4.43	5.87	10.06	.0649	.0314	-.0033	-.4364	.2486	.6403
2.010	0.08	-4.44	4.19	10.06	.0664	.0312	-.0038	-.3568	.2403	.2683
2.010	0.08	-4.46	2.51	10.07	.0664	.0313	-.0040	-.3296	.2462	.1545
2.010	0.07	-4.43	0.83	10.04	.0676	.0313	-.0046	-.3501	.2468	.2972
2.010	0.04	-4.47	0.83	7.59	.0801	.0313	-.0106	-.3836	.2429	.4432
2.010	0.04	-4.46	2.51	7.58	.0744	.0309	-.0089	-.4702	.2483	.8174
2.010	0.06	-4.46	4.19	7.57	.0673	.0311	-.0054	-.4766	.2466	.7733
2.010	0.08	-4.46	5.87	7.58	.0665	.0312	-.0042	-.5828	.2498	1.1828
2.010	0.08	-4.50	7.55	7.59	.0661	.0312	-.0040	-.5733	.2709	.9672
2.010	0.04	-4.56	7.52	5.08	.0694	.0310	-.0071	-.3892	.2738	-.4086
2.010	0.03	-4.53	5.87	5.09	.0756	.0307	-.0099	-.4900	.2844	.2287
2.010	0.04	-4.47	4.19	5.08	.0817	.0314	-.0112	-.6395	.2761	1.1985
2.010	0.09	-4.46	2.51	5.10	.0880	.0318	-.0106	-.6361	.2527	1.3804
2.010	0.15	-4.46	0.83	5.09	.0907	.0322	-.0081	-.5438	.2435	1.0810
2.010	0.18	-4.44	-0.01	5.08	.0906	.0327	-.0063	-.5372	.2472	1.0796
2.010	0.28	-4.35	-0.01	3.42	.0916	.0333	-.0013	-.8712	.2515	2.5558
2.010	0.25	-4.38	0.83	3.42	.0934	.0330	-.0031	-.9160	.2742	2.6446
2.010	0.22	-4.44	1.68	3.43	.0951	.0328	-.0056	-.8738	.2885	2.3136
2.010	0.19	-4.22	2.51	3.28	.0949	.0326	-.0073	-.7528	.2922	1.6104
2.010	0.11	-4.52	4.19	3.44	.0925	.0321	-.0108	-.5691	.2940	.4630
2.010	0.06	-4.55	5.87	3.42	.0886	.0316	-.0124	-.4749	.2766	-.2341
2.010	0.02	-4.57	7.55	3.42	.0818	.0309	-.0121	-.5396	.2949	-.0176
2.010	0.19	-4.57	4.19	2.18	.1002	.0327	-.0087	-.5633	.3065	-.3153
2.010	0.27	-4.52	2.51	2.19	.1013	.0332	-.0048	-.7543	.2984	1.0014
2.010	0.30	-4.52	1.68	2.21	.1000	.0338	-.0027	-.8429	.2980	1.6502
2.010	0.31	-4.50	0.83	2.21	.0956	.0340	-.0007	-.9182	.2866	2.2032
2.010	0.30	-4.43	0.00	2.19	.0869	.0339	.0013	-.9609	.2723	2.5778
2.010	0.19	-7.58	2.51	3.48	.1014	.0325	-.0096	-1.0391	.3981	1.7392
2.010	0.09	-7.64	4.19	3.47	.0963	.0321	-.0132	-.5498	.3822	.4991
2.010	0.04	-7.63	5.87	3.46	.0905	.0314	-.0142	-.8100	.3644	.1090
2.010	0.01	-7.63	7.55	3.46	.0825	.0308	-.0133	-.8609	.3807	.1839
2.010	0.05	-7.66	7.55	5.12	.0711	.0308	-.0073	-.6789	.3493	-.2620
2.010	0.02	-7.59	5.87	5.12	.0771	.0306	-.0109	-.7393	.3628	.2266
2.010	0.03	-7.56	4.19	5.13	.0855	.0310	-.0131	-.8955	.3621	1.2567

TABLE II.- AERODYNAMIC CHARACTERISTICS OF RETURN COMPONENT AND BOMB POD WITH MUTUAL INTERFERENCE; $\beta_P = 0^o$; $\beta_R = 0^o$ - Continued

M	α_R, deg	α_P, deg	x_a, in.	z_a, in.	$C_{L,R}$	$C'_{D,R}$	$C_{m,R}$	$C_{L,P}$	$C'_{D,P}$	$C_{m,P}$
2.010	0.07	-7.47	2.50	5.11	.0926	.0316	-.0128	-.9609	.3396	1.8063
2.010	0.14	-7.51	0.83	5.13	.0964	.0324	-.0105	-.8289	.3249	1.3281
2.010	0.02	-9.59	0.83	7.64	.0831	.0309	-.0128	-.9292	.3979	.9954
2.010	0.02	-9.62	2.52	7.65	.0746	.0306	-.0097	-.9545	.4051	1.0330
2.010	0.07	-9.61	4.19	7.64	.0687	.0310	-.0055	-1.0147	.4063	1.2467
2.010	0.08	-9.60	5.88	7.64	.0679	.0310	-.0045	-1.1334	.4296	1.7066
2.010	0.08	-9.65	7.55	7.65	.0670	.0311	-.0042	-1.0386	.4368	.9490
2.010	0.09	-9.67	7.55	10.18	.0666	.0315	-.0035	-.9608	.4028	.9737
2.010	0.09	-9.64	5.88	10.17	.0663	.0313	-.0035	-.9347	.4049	.9521
2.010	0.08	-9.63	4.20	10.16	.0660	.0312	-.0037	-.9091	.3996	.8692
2.010	0.08	-9.64	2.52	10.16	.0663	.0312	-.0042	-.7962	.3872	.3669
2.010	0.07	-9.61	0.83	10.14	.0664	.0312	-.0044	-.7961	.3898	.3975
2.010	0.09	-9.60	0.83	12.62	.0663	.0313	-.0036	-.7704	.3842	.2382
2.010	0.09	-9.62	2.51	12.64	.0663	.0315	-.0035	-.8237	.3887	.4961
2.010	0.09	-9.59	4.19	12.61	.0663	.0314	-.0035	-.8301	.3907	.4826
2.010	0.09	-9.60	5.88	12.62	.0682	.0314	-.0038	-.7967	.3869	.3214
2.010	0.09	-9.60	7.55	12.62	.0667	.0314	-.0035	-.8574	.3882	.6267
2.010	0.09	-9.60	7.55	15.15	.0660	.0314	-.0034	-.8364	.3920	.5300
2.010	0.09	-9.64	5.88	15.17	.0660	.0314	-.0034	-.7971	.3860	.3521
2.010	0.09	-9.61	4.19	15.15	.0659	.0314	-.0034	-.7833	.3871	.2722
2.010	0.09	-9.60	2.51	15.13	.0664	.0314	-.0035	-.7772	.3852	.2552
2.010	0.09	-9.61	0.83	15.14	.0663	.0314	-.0035	-.7769	.3854	.2399
2.010	0.23	-1.88	0.00	1.22	.0734	.0328	.0020	-.6406	.2220	1.7740
2.010	0.29	-1.97	0.84	1.26	.0811	.0335	.0028	-.6048	.2341	1.2617
2.010	0.32	-2.02	1.67	1.27	.0895	.0338	.0019	-.5549	.2455	.5922
2.010	0.34	-2.02	2.53	1.25	.0971	.0340	.0003	-.5124	.2553	.0622
2.010	0.18	0.10	0.00	0.53	.0647	.0322	.0021	-.3220	.1941	.6184
2.010	0.24	0.04	0.84	0.55	.0729	.0328	.0030	-.3065	.2061	.1877
2.010	0.30	0.01	1.68	0.56	.0806	.0333	.0038	-.2647	.2244	-.3112
2.010	0.31	0.07	2.53	1.21	.0937	.0338	.0001	-.3308	.2179	-.1414
2.010	0.29	0.10	1.69	1.20	.0869	.0336	.0012	-.3930	.2021	.4699
2.010	0.26	0.14	0.84	1.19	.0790	.0332	.0018	-.4554	.1841	1.1727
2.010	0.20	0.18	0.01	1.18	.0689	.0325	.0017	-.4644	.1756	1.5874
2.010	0.28	3.09	2.53	1.23	.0877	.0334	.0000	-.0877	.2000	-.3462
2.010	0.26	3.10	1.68	1.23	.0825	.0333	.0007	-.1686	.1802	.3317
2.010	0.21	3.14	0.86	1.22	.0750	.0328	.0008	-.2364	.1581	1.0059
2.010	0.17	3.15	0.01	1.20	.0652	.0323	.0013	-.1912	.1520	1.1768
2.010	2.21	13.10	0.89	2.03	.1400	.0388	-.0168	.7914	.3663	1.1506
2.010	2.24	13.07	1.73	2.04	.1460	.0394	-.0172	.6517	.3328	1.3114
2.010	2.26	12.99	2.56	2.05	.1509	.0395	-.0177	.6218	.3307	.8311
2.010	2.27	12.88	4.25	2.05	.1589	.0398	-.0196	.6924	.3611	-.9268
2.010	2.18	12.77	7.58	3.36	.1563	.0391	-.0236	.7972	.4188	-1.5368
2.010	2.19	12.86	5.92	3.33	.1550	.0389	-.0225	.7860	.3871	-.8759
2.010	2.22	12.97	4.24	3.32	.1544	.0391	-.0208	.7230	.3602	.5596
2.010	2.25	13.07	2.56	3.31	.1528	.0393	-.0185	.7505	.3591	1.4812
2.010	2.25	13.10	1.73	3.30	.1492	.0394	-.0172	.8345	.3971	1.5175
2.010	2.25	13.10	0.89	3.29	.1446	.0392	-.0161	.9648	.4505	1.0233
2.010	2.22	13.08	2.56	4.96	.1533	.0392	-.0203	1.1078	.4901	.1159
2.010	2.19	13.09	4.25	4.98	.1529	.0389	-.0220	.9281	.4340	1.0022
2.010	2.16	13.03	5.93	4.98	.1515	.0385	-.0231	.8593	.3991	.4282
2.010	2.15	12.92	7.59	5.01	.1496	.0383	-.0233	.8767	.4088	-.5962
2.010	2.16	10.96	7.58	7.49	.1436	.0381	-.0204	.6771	.3400	.7230
2.010	2.14	10.84	7.58	4.98	.1496	.0382	-.0235	.6302	.3217	-.6937
2.010	2.16	10.91	5.90	4.99	.1522	.0386	-.0237	.5532	.3028	.6050
2.010	2.18	10.98	4.23	4.99	.1542	.0389	-.0228	.6062	.3174	1.1224
2.010	2.22	10.98	2.55	4.97	.1545	.0391	-.0209	.7613	.3592	.3344
2.010	2.24	10.93	0.86	4.99	.1525	.0393	-.0189	.8328	.3799	-.0806
2.010	2.25	10.94	0.02	4.98	.1505	.0394	-.0177	.9093	.3968	-.2384
2.010	2.25	11.02	0.03	3.27	.1428	.0393	-.0157	.6615	.3490	.7871
2.010	2.27	11.02	0.87	3.29	.1483	.0395	-.0164	.6235	.3312	1.1054
2.010	2.26	11.04	1.72	3.29	.1511	.0395	-.0175	.5257	.3019	1.5501
2.010	2.22	10.91	4.22	3.31	.1560	.0392	-.0214	.4854	.2856	.3652
2.010	2.19	10.80	5.90	3.32	.1565	.0390	-.0232	.5684	.3096	-.9657
2.010	2.17	10.79	7.58	3.31	.1564	.0388	-.0245	.5592	.3402	-1.4369
2.010	2.27	10.80	4.23	2.07	.1605	.0400	-.0200	.4932	.2933	-1.0826
2.010	2.27	10.90	2.55	2.05	.1551	.0400	-.0181	.3970	.2620	.5271
2.010	2.26	10.94	1.71	2.05	.1502	.0398	-.0172	.3625	.2475	1.2524
2.010	2.23	10.98	0.87	2.03	.1419	.0390	-.0164	.4897	.2744	1.1720
2.010	2.19	11.01	0.03	2.01	.1363	.0383	-.0164	.6408	.3221	.8412
2.010	2.16	8.87	5.90	7.50	.1456	.0382	-.0215	.5457	.2792	.2291
2.010	2.14	8.85	4.22	7.50	.1480	.0382	-.0231	.6289	.3059	-.0683
2.010	2.15	8.90	2.56	7.49	.1522	.0384	-.0241	.7192	.3220	-.2453
2.010	2.17	8.88	0.86	7.49	.1537	.0388	-.0234	.7835	.3388	-.4457
2.010	2.24	5.77	0.01	2.09	.1433	.0392	-.0160	-.0343	.1717	1.3759
2.010	2.28	5.75	0.84	2.11	.1505	.0398	-.0161	-.1924	.1583	1.8898
2.010	2.31	5.68	1.68	2.15	.1576	.0404	-.0171	-.1631	.1630	1.2731
2.010	2.32	5.66	2.51	2.13	.1630	.0407	-.0184	-.1076	.1699	.5732
2.010	2.28	5.59	4.19	2.13	.1659	.0404	-.0212	.0467	.2064	-.7630
2.010	2.15	5.58	7.54	3.38	.1582	.0387	-.0261	.1165	.2371	-.8744
2.010	2.18	5.64	5.86	3.35	.1595	.0391	-.0248	.1378	.2079	-.8026

TABLE II.- AERODYNAMIC CHARACTERISTICS OF RETURN COMPONENT AND BOMB POD WITH MUTUAL INTERFERENCE; $\beta_P = 0^o$; $\beta_R = 0^o$ - Continued

M	α_R, deg	α_P, deg	x_a, in.	z_a, in.	$C_{L,R}$	$C'_{D,R}$	$C_{m,R}$	$C_{L,P}$	$C'_{D,P}$	$C_{m,P}$
2.010	2.22	5.69	4.20	3.36	.1608	.0396	-.0229	.0158	.1897	.2962
2.010	2.27	5.72	2.51	3.39	.1603	.0397	-.0202	-.1471	.1679	1.7719
2.010	2.29	5.78	1.68	3.37	.1601	.0401	-.0188	-.1545	.1617	2.0018
2.010	2.30	5.81	0.85	3.34	.1557	.0403	-.0170	-.0818	.1662	1.7388
2.010	2.29	5.77	0.01	3.35	.1508	.0400	-.0156	.0044	.1773	1.3203
2.010	2.26	5.79	0.01	4.99	.1557	.0395	-.0189	.2787	.2347	.2403
2.010	2.25	5.79	0.85	5.00	.1570	.0396	-.0203	.2199	.2222	.4544
2.010	2.21	5.83	2.52	4.99	.1587	.0394	-.0226	.1157	.1977	.8487
2.010	2.17	5.78	4.19	5.01	.1570	.0389	-.0243	.0102	.1900	1.2275
2.010	2.15	5.74	5.86	5.01	.1548	.0384	-.0250	.0852	.2044	.4146
2.010	2.14	5.68	7.55	5.01	.1514	.0381	-.0244	.2019	.2130	-.7135
2.010	2.16	5.76	7.55	7.52	.1440	.0380	-.0206	.1080	.2136	.8045
2.010	2.16	5.79	5.86	7.50	.1451	.0380	-.0213	.2070	.2160	.5343
2.010	2.14	5.73	4.20	7.53	.1483	.0380	-.0233	.2995	.2296	.1591
2.010	2.14	5.78	2.52	7.50	.1518	.0382	-.0245	.3838	.2436	-.0619
2.010	2.16	5.76	0.84	7.52	.1552	.0387	-.0244	.4627	.2577	-.3873
2.010	2.14	5.82	0.85	9.99	.1464	.0379	-.0224	.4744	.2652	-.3448
2.010	2.16	5.82	2.52	9.98	.1440	.0380	-.0207	.4616	.2611	-.2956
2.010	2.16	5.76	4.19	10.02	.1436	.0381	-.0204	.4559	.2591	-.3549
2.010	2.17	5.78	5.86	10.01	.1440	.0381	-.0204	.4176	.2442	-.2224
2.010	2.17	5.80	7.55	10.01	.1436	.0383	-.0202	.3389	.2340	.0274
2.010	2.29	0.65	0.01	2.14	.1523	.0400	-.0158	-.7052	.1594	2.6940
2.010	2.32	0.63	0.84	2.15	.1594	.0407	-.0165	-.6832	.1769	2.3335
2.010	2.34	0.61	1.70	2.14	.1659	.0412	-.0176	-.6005	.1976	1.6186
2.010	2.34	0.55	2.54	2.16	.1708	.0415	-.0194	-.5371	.2043	.9253
2.010	2.30	0.48	4.20	2.16	.1740	.0409	-.0229	-.3388	.2311	-.5095
2.010	2.13	0.50	7.55	3.39	.1618	.0388	-.0281	-.2932	.2379	-.4290
2.010	2.17	0.49	5.88	3.41	.1652	.0394	-.0271	-.2399	.2125	-.5346
2.010	2.22	0.53	4.20	3.41	.1664	.0399	-.0249	-.3495	.2117	.3376
2.010	2.27	0.58	2.54	3.43	.1656	.0402	-.0219	-.5661	.1854	1.8332
2.010	2.31	0.63	1.69	3.42	.1658	.0404	-.0199	-.6705	.1633	2.5509
2.010	2.33	0.64	0.84	3.41	.1632	.0406	-.0179	-.6623	.1583	2.6761
2.010	2.33	0.65	0.01	3.41	.1590	.0406	-.0162	-.5861	.1480	2.4394
2.010	2.28	0.66	0.01	5.05	.1627	.0402	-.0203	-.2288	.1854	1.0212
2.010	2.25	0.67	0.84	5.04	.1637	.0400	-.0220	-.2483	.1711	1.0272
2.010	2.21	0.67	2.54	5.06	.1640	.0397	-.0248	-.4550	.1619	1.9517
2.010	2.16	0.64	4.20	5.06	.1617	.0390	-.0265	-.4271	.1942	1.5178
2.010	2.13	0.58	5.87	5.05	.1576	.0384	-.0268	-.2379	.2174	.2606
2.010	2.13	0.60	7.55	5.02	.1518	.0380	-.0252	-.1493	.2156	-.4507
2.010	2.17	0.66	7.55	7.53	.1462	.0382	-.0211	-.2948	.1950	1.0856
2.010	2.16	0.69	5.88	7.53	.1466	.0382	-.0214	-.3226	.1709	1.4595
2.010	2.14	0.68	4.20	7.52	.1498	.0380	-.0239	-.1497	.1829	.7716
2.010	2.13	0.70	2.54	7.51	.1534	.0383	-.0257	-.0769	.1972	.5231
2.010	2.15	0.67	0.84	7.52	.1590	.0389	-.0262	.0301	.2003	.0362
2.010	2.15	0.69	0.84	10.02	.1493	.0382	-.0230	.0493	.2052	.0464
2.010	2.17	0.69	2.54	10.02	.1465	.0382	-.0211	.0494	.2040	.0311
2.010	2.17	0.69	4.20	10.02	.1457	.0382	-.0210	.0497	.2006	-.0148
2.010	2.17	0.72	5.88	10.00	.1450	.0382	-.0206	-.0304	.1950	.3425
2.010	2.17	0.72	7.55	10.01	.1457	.0385	-.0205	-.0966	.1853	.5891
2.010	2.17	0.66	7.55	12.55	.1464	.0385	-.0207	.0562	.2039	-.0012
2.010	2.17	0.66	5.88	12.55	.1460	.0385	-.0206	.0561	.2027	.0141
2.010	2.17	0.66	4.20	12.55	.1452	.0384	-.0205	.0826	.2024	-.0693
2.010	2.17	0.66	2.54	12.55	.1457	.0386	-.0205	.1094	.2043	-.2138
2.010	2.17	0.68	0.84	12.53	.1461	.0386	-.0209	.1092	.2034	-.1985
2.010	2.17	0.67	0.84	15.04	.1452	.0385	-.0204	.1093	.2050	-.2138
2.010	2.17	0.69	2.54	15.03	.1452	.0384	-.0205	.1092	.2042	-.1985
2.010	2.17	0.67	4.20	15.05	.1460	.0385	-.0206	.1090	.2039	-.1679
2.010	2.17	0.67	5.88	15.05	.1452	.0384	-.0205	.1155	.2036	-.1689
2.010	2.17	0.67	7.55	15.05	.1463	.0385	-.0207	.1025	.2034	-.1654
2.010	2.10	-4.57	7.55	3.40	.1636	.0385	-.0304	-.6144	.3104	-.3172
2.010	2.15	-4.58	5.87	3.42	.1692	.0394	-.0297	-.6504	.2954	.0882
2.010	2.21	-4.55	4.19	3.45	.1734	.0400	-.0278	-.6982	.3081	.6207
2.010	2.29	-4.46	2.52	3.42	.1753	.0406	-.0242	-.8957	.3022	1.9517
2.010	2.32	-4.44	1.68	3.44	.1750	.0408	-.0219	-1.0316	.2956	2.8862
2.010	2.35	-4.37	0.83	3.43	.1737	.0413	-.0202	-1.1156	.2666	3.4874
2.010	2.36	-4.38	0.00	3.45	.1702	.0414	-.0185	-1.0780	.2483	3.5064
2.010	2.29	-4.43	0.00	5.09	.1690	.0407	-.0218	-.6332	.2250	1.6665
2.010	2.25	-4.43	0.83	5.09	.1705	.0404	-.0245	-.7195	.2314	2.0252
2.010	2.19	-4.42	2.51	5.10	.1681	.0396	-.0273	-.9102	.2600	2.8078
2.010	2.14	-4.47	4.19	5.09	.1649	.0391	-.0289	-.7440	.2944	1.5456
2.010	2.11	-4.57	5.87	5.10	.1592	.0382	-.0285	-.5675	.2917	.3554
2.010	2.12	-4.57	7.52	5.08	.1530	.0380	-.0259	-.5266	.2844	-.0361
2.010	2.16	-4.50	7.55	7.59	.1459	.0382	-.0212	-.6257	.2728	1.1180
2.010	2.16	-4.41	5.87	7.56	.1463	.0383	-.0213	-.7364	.2546	1.9699
2.010	2.14	-4.46	4.19	7.59	.1503	.0382	-.0241	-.6114	.2382	1.5243
2.010	2.12	-4.45	2.51	7.58	.1562	.0382	-.0272	-.5040	.2468	1.0692
2.010	2.13	-4.47	0.83	7.59	.1619	.0389	-.0282	-.4039	.2412	.5850
2.010	2.15	-4.41	0.83	10.04	.1479	.0382	-.0227	-.3241	.2489	.3506
2.010	2.17	-4.45	2.51	10.06	.1459	.0382	-.0211	-.3103	.2479	.2250
2.010	2.17	-4.43	4.19	10.05	.1463	.0383	-.0211	-.3576	.2413	.4203

TABLE II.- AERODYNAMIC CHARACTERISTICS OF RETURN COMPONENT AND BOMB POD WITH MUTUAL INTERFERENCE; $\beta_P = 0^o$; $\beta_R = 0^o$ - Continued

M	α_R, deg	α_P, deg	x_a, in.	z_a, in.	$C_{L,R}$	$C_{D,R}$	$C_{m,R}$	$C_{L,P}$	$C_{D,P}$	$C_{m,P}$
2.010	2.17	-4.45	5.87	10.07	.1462	.0383	-.0207	-.4506	.2469	.8415
2.010	2.17	-4.44	7.55	10.08	.1458	.0385	-.0205	-.5446	.2406	1.2776
2.010	2.17	-4.46	7.55	12.56	.1454	.0385	-.0205	-.3171	.2425	.2115
2.010	2.17	-4.46	5.87	12.56	.1459	.0385	-.0205	-.3300	.2497	.2760
2.010	2.18	-4.43	4.19	12.55	.1461	.0385	-.0206	-.3235	.2497	.2742
2.010	2.17	-4.45	2.51	12.55	.1458	.0385	-.0205	-.2770	.2464	.0637
2.010	2.17	-4.40	0.83	12.53	.1462	.0383	-.0209	-.2703	.2465	.0466
2.010	2.17	-4.44	0.83	15.07	.1454	.0385	-.0205	-.2441	.2462	.0091
2.010	2.17	-4.44	2.51	15.08	.1459	.0385	-.0205	-.2639	.2472	.0449
2.010	2.18	-4.44	4.19	15.08	.1461	.0385	-.0206	-.2770	.2455	.0636
2.010	2.17	-4.44	5.87	15.07	.1454	.0386	-.0205	-.2835	.2454	.0501
2.010	2.17	-4.46	7.55	15.09	.1458	.0385	-.0205	-.3101	.2473	.1944
2.010	2.29	-7.60	2.51	3.48	.1832	.0412	-.0268	-1.1488	.4128	1.9958
2.010	2.19	-7.67	4.20	3.47	.1799	.0405	-.0309	-.9852	.4039	.7337
2.010	2.13	-7.66	5.87	3.47	.1738	.0392	-.0323	-.9912	.3917	.4160
2.010	2.09	-7.72	7.56	3.48	.1667	.0385	-.0323	-.9661	.4060	-.1997
2.010	2.12	-7.64	7.55	5.11	.1530	.0377	-.0262	-.8685	.3722	.2908
2.010	2.10	-7.60	5.87	5.12	.1604	.0381	-.0298	-.8433	.3736	.4670
2.010	2.12	-7.57	4.19	5.14	.1671	.0390	-.0307	-.9794	.3771	1.4921
2.010	2.17	-7.44	2.51	5.11	.1737	.0397	-.0302	-1.2130	.3630	3.0743
2.010	2.25	-7.46	0.83	5.14	.1795	.0408	-.0263	-1.1046	.3249	2.8135
2.010	2.30	-7.53	0.00	5.17	.1748	.0410	-.0234	-.9515	.3138	2.0884
2.010	2.11	-9.57	0.83	7.64	.1650	.0385	-.0307	-.9562	.3996	1.2902
2.010	2.10	-9.36	2.50	7.46	.1581	.0379	-.0290	-1.0114	.3927	1.5620
2.010	2.13	-9.55	4.19	7.63	.1502	.0379	-.0243	-1.2266	.4281	2.4558
2.010	2.17	-9.59	5.88	7.64	.1473	.0380	-.0215	-1.2086	.4446	2.1174
2.010	2.17	-9.69	7.55	7.67	.1465	.0381	-.0214	-1.0897	.4480	1.0685
2.010	2.18	-9.65	7.56	10.19	.1464	.0385	-.0206	-1.1400	.4179	2.0522
2.010	2.18	-9.63	5.88	10.17	.1460	.0384	-.0205	-.9677	.3978	1.2462
2.010	2.17	-9.62	4.20	10.16	.1460	.0382	-.0211	-.9011	.3932	1.0163
2.010	2.17	-9.63	2.52	10.16	.1467	.0383	-.0213	-.7751	.3808	.4215
2.010	2.16	-9.62	0.83	10.15	.1491	.0384	-.0228	-.7871	.3886	.4855
2.010	2.17	-9.59	0.83	12.62	.1467	.0383	-.0210	-.7408	.3827	.2455
2.010	2.18	-9.58	2.51	12.63	.1457	.0385	-.0205	-.7109	.3723	.4494
2.010	2.18	-9.55	4.19	12.60	.1465	.0385	-.0207	-.7303	.3758	.5304
2.010	2.18	-9.58	5.88	12.61	.1457	.0385	-.0205	-.7230	.3726	.3767
2.010	2.18	-9.57	7.55	12.61	.1460	.0385	-.0205	-.8219	.3817	.7818
2.010	2.18	-9.60	7.55	15.15	.1461	.0384	-.0205	-.7802	.3848	.5135
2.010	2.18	-9.60	5.88	15.15	.1464	.0384	-.0207	-.7466	.3806	.2772
2.010	2.18	-9.58	4.19	15.13	.1451	.0385	-.0204	-.7397	.3812	.2602
2.010	2.18	-9.59	2.52	15.13	.1451	.0385	-.0204	-.7398	.3808	.2602
2.010	2.18	-9.59	0.83	15.13	.1462	.0385	-.0206	-.7331	.3790	.2281
2.010	2.43	0.03	2.53	1.22	.1714	.0421	-.0150	-.4848	.2319	.0673
2.010	2.40	0.03	1.69	1.24	.1640	.0415	-.0142	-.5405	.2088	.7794
2.010	2.36	0.10	0.84	1.21	.1574	.0407	-.0143	-.5835	.1886	1.4729
2.010	2.29	0.17	0.01	1.20	.1494	.0397	-.0155	-.5550	.1756	2.1174
2.010	2.25	2.11	0.00	0.52	.1406	.0389	-.0149	-.3013	.1655	.8037
2.010	2.31	2.07	0.84	0.53	.1467	.0397	-.0136	-.2667	.1882	.2496
2.010	2.37	2.06	1.67	0.53	.1548	.0407	-.0128	-.2255	.2124	-.3512
2.010	2.40	2.00	2.51	1.27	.1691	.0417	-.0158	-.3167	.2017	-.0544
2.010	2.37	2.06	1.67	1.24	.1621	.0412	-.0151	-.3718	.1804	.6116
2.010	2.32	2.11	0.84	1.23	.1532	.0403	-.0149	-.4270	.1595	1.3537
2.010	2.27	2.19	0.00	1.19	.1459	.0393	-.0157	-.4693	.1453	2.0314
2.010	2.36	5.14	2.52	1.20	.1642	.0411	-.0164	-.0627	.1874	-.3209
2.010	2.33	5.14	1.67	1.21	.1575	.0407	-.0161	-.1362	.1653	.4263
2.010	2.28	5.19	0.84	1.20	.1497	.0398	-.0161	-.2036	.1429	1.2173
2.010	2.23	5.24	0.00	1.20	.1423	.0390	-.0163	-.2062	.1353	1.7786
2.010	4.27	13.13	0.89	2.04	.2158	.0507	-.0327	.6402	.3189	2.0066
2.010	4.30	13.06	1.73	2.04	.2234	.0519	-.0333	.5733	.3064	1.5401
2.010	4.32	12.98	2.56	2.04	.2306	.0524	-.0345	.5788	.3077	.6124
2.010	4.35	12.80	4.24	2.08	.2407	.0533	-.0366	.6197	.3293	-1.3429
2.010	4.24	12.71	7.58	3.37	.2371	.0519	-.0411	.6142	.3960	-1.6965
2.010	4.27	12.79	5.92	3.35	.2354	.0522	-.0393	.6619	.3443	-1.1589
2.010	4.30	12.93	4.24	3.34	.2353	.0523	-.0375	.6808	.3371	.2346
2.010	4.32	13.08	2.56	3.31	.2304	.0521	-.0349	.6561	.3412	1.7735
2.010	4.32	13.11	1.73	3.31	.2269	.0518	-.0337	.6321	.3425	2.3846
2.010	4.31	13.12	0.88	3.30	.2216	.0515	-.0326	.7442	.3812	2.0311
2.010	4.29	13.11	2.56	4.98	.2312	.0519	-.0364	.8406	.4085	1.4755
2.010	4.27	13.10	4.25	4.99	.2320	.0518	-.0381	.7385	.3802	1.8665
2.010	4.24	13.01	5.93	4.99	.2315	.0514	-.0396	.7490	.3676	.6528
2.010	4.21	12.86	7.59	5.03	.2290	.0508	-.0403	.7519	.3666	-.7567
2.010	4.30	13.05	1.73	2.04	.2221	.0517	-.0330	.5283	.2934	1.5489
2.010	4.24	11.02	0.03	2.01	.2126	.0501	-.0330	.4505	.2762	1.6732
2.010	4.29	11.02	0.87	2.02	.2195	.0512	-.0327	.3116	.2403	1.8937
2.010	4.33	10.93	1.71	2.05	.2276	.0523	-.0335	.2459	.2224	1.4270
2.010	4.35	10.86	2.55	2.06	.2349	.0532	-.0347	.2961	.2296	.4751
2.010	4.35	10.74	4.22	2.08	.2422	.0535	-.0369	.3542	.2556	-1.1760
2.010	4.24	10.71	7.58	3.34	.2372	.0519	-.0415	.4091	.3236	-1.4817
2.010	4.26	10.74	5.90	3.33	.2365	.0521	-.0399	.4611	.2796	-1.1900
2.010	4.30	10.84	4.22	3.33	.2363	.0523	-.0380	.4292	.2655	.0602

TABLE II.- AERODYNAMIC CHARACTERISTICS OF RETURN COMPONENT AND BOMB POD WITH MUTUAL INTERFERENCE; $\beta_P = 0^o$; $\beta_R = 0^o$ - Continued

M	α_R, deg	α_P, deg	x_a, in.	z_a, in.	$C_{L,R}$	$C_{D',R}$	$C_{m,R}$	$C_{L,P}$	$C_{D',P}$	$C_{m,P}$
2.010	4.33	10.99	2.57	3.31	.2330	.0524	-.0354	.4076	.2623	1.4873
2.010	4.33	11.02	1.71	3.31	.2299	.0522	-.0341	.4089	.2734	1.9698
2.010	4.32	11.05	0.87	3.28	.2243	.0519	-.0327	.4403	.2822	1.9000
2.010	4.32	11.01	0.03	3.29	.2198	.0513	-.0319	.5432	.3090	1.3100
2.010	4.32	10.99	0.03	4.97	.2265	.0519	-.0334	.8859	.3919	.1138
2.010	4.32	10.96	0.86	5.00	.2298	.0521	-.0347	.7730	.3627	.4167
2.010	4.30	11.02	2.55	4.98	.2332	.0521	-.0372	.4986	.2897	1.7160
2.010	4.26	11.00	4.23	4.99	.2328	.0518	-.0388	.4596	.2925	1.6069
2.010	4.23	10.90	5.90	4.99	.2317	.0513	-.0402	.5068	.2907	.4162
2.010	4.20	10.79	7.58	4.99	.2291	.0507	-.0407	.5283	.2891	-.8440
2.010	4.23	10.95	7.58	7.50	.2234	.0505	-.0375	.5638	.3170	1.0657
2.010	4.30	11.03	2.55	4.98	.2332	.0521	-.0371	.5251	.2924	1.7115
2.010	4.24	8.90	0.86	7.49	.2323	.0516	-.0396	.8256	.3599	-.3961
2.010	4.21	8.94	2.56	7.48	.2313	.0512	-.0408	.7307	.3296	-.0825
2.010	4.20	8.86	4.22	7.52	.2280	.0506	-.0403	.5912	.2926	.3337
2.010	4.21	8.90	5.92	7.51	.2249	.0505	-.0388	.3524	.2408	1.2468
2.010	4.29	5.77	0.01	2.11	.2198	.0512	-.0328	-.3412	.1213	2.6859
2.010	4.33	5.77	0.84	2.11	.2271	.0523	-.0329	-.3671	.1316	2.4250
2.010	4.37	5.68	1.68	2.13	.2346	.0532	-.0335	-.3115	.1428	1.6384
2.010	4.39	5.64	2.52	2.14	.2411	.0540	-.0347	-.2427	.1528	.7719
2.010	4.36	5.52	4.19	2.16	.2470	.0542	-.0378	-.1077	.1906	-.7042
2.010	4.22	5.55	7.54	3.38	.2387	.0520	-.0432	-.0004	.2410	-1.0213
2.010	4.25	5.57	5.86	3.38	.2389	.0522	-.0415	.0159	.1930	-.8122
2.010	4.29	5.65	4.20	3.37	.2390	.0526	-.0393	-.0670	.1789	.2102
2.010	4.34	5.71	2.51	3.39	.2388	.0530	-.0364	-.2750	.1464	1.9480
2.010	4.34	5.81	0.02	3.35	.2262	.0523	-.0319	-.2042	.1305	2.2790
2.010	4.34	5.83	0.02	4.99	.2327	.0526	-.0346	.2047	.2153	.7129
2.010	4.32	5.82	0.85	5.01	.2340	.0525	-.0360	.1207	.1931	1.0695
2.010	4.28	5.81	2.52	5.03	.2365	.0523	-.0388	-.1607	.1500	2.2215
2.010	4.24	5.80	4.19	5.01	.2352	.0518	-.0405	-.1271	.1709	1.6665
2.010	4.24	5.79	5.86	5.01	.2350	.0519	-.0406	-.0798	.1753	1.2604
2.010	4.21	5.74	5.86	5.00	.2325	.0512	-.0416	.0472	.1959	.3009
2.010	4.19	5.66	7.55	5.02	.2292	.0507	-.0415	.0979	.1966	-.5316
2.010	4.23	5.77	7.55	7.52	.2220	.0504	-.0371	.0113	.1859	1.0533
2.010	4.21	5.81	5.86	7.51	.2241	.0506	-.0387	.0289	.1814	1.4437
2.010	4.20	5.78	4.20	7.53	.2280	.0505	-.0407	.2186	.2114	.6797
2.010	4.20	5.80	2.52	7.51	.2318	.0511	-.0415	.3746	.2410	.1225
2.010	4.23	5.79	0.85	7.51	.2336	.0516	-.0407	.4720	.2647	-.2983
2.010	4.20	5.83	0.85	9.99	.2265	.0504	-.0400	.5174	.2685	-.4015
2.010	4.22	5.81	2.52	10.00	.2230	.0504	-.0379	.4782	.2652	-.2696
2.010	4.23	5.79	4.20	10.01	.2222	.0504	-.0370	.4724	.2623	-.2983
2.010	4.23	5.79	5.87	10.01	.2217	.0504	-.0370	.4144	.2444	-.0852
2.010	4.23	5.80	7.55	10.02	.2217	.0505	-.0366	.2713	.2136	.5148
2.010	4.36	0.66	0.01	2.15	.2290	.0527	-.0323	-.9324	.1372	3.6251
2.010	4.40	0.62	0.84	2.16	.2368	.0538	-.0325	-.8637	.1614	2.9391
2.010	4.42	0.55	1.69	2.19	.2431	.0546	-.0336	-.7622	.1872	2.0946
2.010	4.42	0.54	2.54	2.18	.2491	.0552	-.0353	-.6818	.2048	1.4019
2.010	4.38	0.44	4.20	2.17	.2538	.0550	-.0392	-.4694	.2231	-.4515
2.010	4.19	0.43	7.55	3.42	.2405	.0519	-.0454	-.3253	.2375	-.8372
2.010	4.24	0.43	5.88	3.44	.2442	.0527	-.0440	-.3727	.2061	-.3250
2.010	4.29	0.50	4.20	3.43	.2458	.0530	-.0416	-.4101	.2109	.4717
2.010	4.35	0.58	2.53	3.44	.2458	.0537	-.0383	-.6319	.1756	2.1031
2.010	4.38	0.64	1.69	3.43	.2440	.0538	-.0361	-.7459	.1616	2.9181
2.010	4.39	0.67	0.84	3.42	.2400	.0535	-.0342	-.8257	.1379	3.5109
2.010	4.38	0.69	0.01	3.41	.2351	.0532	-.0329	-.8138	.1106	3.6895
2.010	4.36	0.69	0.01	5.06	.2384	.0534	-.0355	-.2861	.1530	1.5193
2.010	4.33	0.72	0.84	5.05	.2400	.0530	-.0377	-.4692	.1420	2.3742
2.010	4.28	0.72	2.54	5.06	.2405	.0525	-.0408	-.7058	.1481	3.1958
2.010	4.23	0.64	4.20	5.05	.2378	.0519	-.0425	-.5126	.1872	1.7022
2.010	4.19	0.59	5.88	5.05	.2352	.0512	-.0435	-.3256	.2024	.4022
2.010	4.17	0.55	7.55	5.04	.2290	.0503	-.0423	-.2969	.2049	-.0578
2.010	4.22	0.64	7.55	7.54	.2211	.0503	-.0371	-.3620	.1856	1.1076
2.010	4.21	0.70	5.88	7.54	.2232	.0505	-.0383	-.4839	.1621	2.1526
2.010	4.19	0.71	4.20	7.53	.2279	.0505	-.0412	-.3466	.1599	1.7830
2.010	4.19	0.66	2.54	7.55	.2326	.0509	-.0427	-.1225	.1867	.8020
2.010	4.22	0.70	0.84	7.51	.2369	.0518	-.0426	.0226	.1996	.1435
2.010	4.20	0.67	0.84	10.03	.2261	.0503	-.0402	.0618	.2029	.0274
2.010	4.22	0.69	2.54	10.02	.2229	.0504	-.0376	.0485	.2046	.0763
2.010	4.23	0.69	4.20	10.02	.2217	.0503	-.0371	.0423	.1989	.0628
2.010	4.23	0.75	7.55	10.02	.2217	.0505	-.0367	-.2878	.1638	1.5566
2.010	4.24	0.66	7.55	12.55	.2221	.0506	-.0366	.0489	.2050	.0460
2.010	4.23	0.66	5.87	12.55	.2218	.0506	-.0366	.0620	.2034	.0123
2.010	4.23	0.66	4.20	12.55	.2222	.0507	-.0367	.0886	.2025	-.1309
2.010	4.23	0.66	2.54	12.55	.2217	.0505	-.0368	.1019	.2037	-.2101
2.010	4.23	0.68	0.84	12.53	.2226	.0505	-.0371	.1082	.2026	-.1967
2.010	4.23	0.65	0.84	15.06	.2219	.0506	-.0367	.1085	.2040	-.2271
2.010	4.23	0.69	2.54	15.04	.2222	.0506	-.0367	.1083	.2029	-.2119
2.010	4.23	0.67	4.20	15.05	.2218	.0507	-.0367	.1018	.2023	-.1950
2.010	4.23	0.69	5.88	15.04	.2215	.0506	-.0366	.0953	.2015	-.1933
2.010	4.23	0.67	7.55	15.05	.2219	.0506	-.0367	.0955	.2017	-.1933

TABLE II.- AERODYNAMIC CHARACTERISTICS OF RETURN COMPONENT AND BOMB POD WITH MUTUAL INTERFERENCE; $\beta_P = 0^o$; $\beta_R = 0^o$ - Continued

M	α_R, deg	α_P, deg	x_a, in.	z_a, in.	$C_{L,R}$	$C'_{D,R}$	$C_{m,R}$	$C_{L,P}$	$C'_{D,P}$	$C_{m,P}$
2.010	4.23	0.73	5.88	10.01	.2216	.0504	-.0368	-.0439	.1839	.5247
2.010	4.16	-4.67	7.55	3.43	.2455	.0518	-.0487	-.7679	.3288	-.5451
2.010	4.20	-4.63	5.87	3.44	.2492	.0526	-.0474	-.8712	.3190	.4046
2.010	4.27	-4.58	4.19	3.47	.2530	.0537	-.0452	-.8874	.3214	.9092
2.010	4.35	-4.50	2.52	3.45	.2553	.0542	-.0412	-1.0784	.3082	2.3815
2.010	4.37	-4.39	0.00	5.10	.2447	.0538	-.0367	-.9158	.2118	3.1220
2.010	4.33	-4.38	0.83	5.11	.2459	.0537	-.0394	-1.1341	.2270	4.1189
2.010	4.25	-4.42	2.51	5.11	.2451	.0528	-.0437	-1.1277	.2719	3.6494
2.010	4.20	-4.49	4.19	5.10	.2428	.0520	-.0455	-.8769	.2920	1.8888
2.010	4.16	-4.58	5.87	5.12	.2364	.0508	-.0456	-.7744	.2879	.9240
2.010	4.16	-4.55	7.52	5.08	.2310	.0501	-.0436	-.8058	.2890	.8409
2.010	4.22	-4.49	7.55	7.58	.2207	.0502	-.0371	-.6999	.2721	1.2067
2.010	4.22	-4.41	5.87	7.57	.2226	.0503	-.0379	-.8369	.2596	2.3175
2.010	4.17	-4.43	4.19	7.60	.2268	.0501	-.0415	-.8675	.2368	2.8399
2.010	4.17	-4.43	2.51	7.59	.2326	.0506	-.0439	-.5953	.2326	1.5417
2.010	4.19	-4.48	0.84	7.60	.2385	.0517	-.0445	-.4088	.2373	.7045
2.010	4.19	-4.41	0.83	10.04	.2248	.0502	-.0401	-.3092	.2476	.3602
2.010	4.22	-4.44	2.51	10.06	.2208	.0503	-.0371	-.3153	.2491	.3164
2.010	4.22	-4.42	4.19	10.05	.2211	.0502	-.0371	-.3758	.2392	.5747
2.010	4.22	-4.44	5.87	10.07	.2204	.0501	-.0367	-.5159	.2332	1.2330
2.010	4.23	-4.42	7.55	10.09	.2211	.0504	-.0365	-.7675	.2432	2.3607
2.010	4.23	-4.40	7.55	12.54	.2211	.0505	-.0365	-.3289	.2440	.3501
2.010	4.23	-4.45	5.87	12.56	.2207	.0505	-.0365	-.3153	.2488	.3164
2.010	4.23	-4.46	4.19	12.56	.2214	.0506	-.0366	-.3020	.2462	.2371
2.010	4.23	-4.45	2.51	12.55	.2207	.0503	-.0366	-.2492	.2434	-.0043
2.010	4.23	-4.40	0.83	12.53	.2219	.0504	-.0371	-.2492	.2463	.0260
2.010	4.23	-4.44	0.83	15.07	.2217	.0506	-.0366	-.2553	.2463	.0125
2.010	4.23	-4.46	2.51	15.09	.2210	.0505	-.0365	-.2621	.2461	.0446
2.010	4.23	-4.43	4.19	15.08	.2216	.0506	-.0366	-.2427	.2434	.0394
2.010	4.23	-4.46	5.87	15.09	.2205	.0505	-.0365	-.2621	.2449	.0446
2.010	4.23	-4.46	7.55	15.09	.2212	.0504	-.0365	-.2754	.2432	.1087
2.010	4.36	5.82	1.69	3.35	.2361	.0533	-.0346	-.3082	.1255	2.4825
2.010	4.36	5.84	0.85	3.34	.2314	.0527	-.0329	-.3283	.1200	2.7433
2.010	4.15	-7.70	7.55	5.15	.2300	.0500	-.0442	-1.1745	.4021	1.1276
2.010	4.14	-7.62	5.87	5.14	.2383	.0507	-.0473	-1.0861	.3832	1.1645
2.010	4.18	-7.56	4.19	5.14	.2452	.0518	-.0476	-1.1417	.3914	1.9642
2.010	4.23	-7.43	2.51	5.12	.2490	.0531	-.0461	-1.3811	.3822	3.7343
2.010	4.33	-7.41	0.83	5.15	.2514	.0540	-.0413	-1.5136	.3563	4.8829
2.010	4.37	-7.45	0.00	5.17	.2512	.0544	-.0392	-1.3442	.3316	4.1879
2.010	4.16	-9.56	0.83	7.64	.2428	.0515	-.0476	-1.0216	.4068	1.6632
2.010	4.14	-9.55	2.52	7.64	.2353	.0504	-.0461	-1.2073	.4154	2.5269
2.010	4.17	-9.55	4.19	7.65	.2264	.0499	-.0418	-1.4525	.4658	3.5433
2.010	4.22	-9.60	5.88	7.64	.2211	.0500	-.0376	-1.2668	.4630	2.2297
2.010	4.22	-9.67	7.55	7.65	.2215	.0501	-.0374	-1.1959	.4576	1.3761
2.010	4.23	-9.64	7.56	10.20	.2199	.0503	-.0363	-1.3064	.4453	2.8229
2.010	4.22	-9.59	5.88	10.17	.2197	.0501	-.0366	-1.1872	.4103	2.4447
2.010	4.22	-9.63	4.19	10.17	.2206	.0503	-.0371	-.9414	.3980	1.2338
2.010	4.22	-9.63	2.52	10.16	.2203	.0502	-.0372	-.7899	.3857	.5149
2.010	4.18	-9.59	0.83	10.14	.2240	.0499	-.0402	-.7956	.3926	.5769
2.010	4.22	-9.64	0.84	12.65	.2199	.0502	-.0370	-.7357	.3883	.2444
2.010	4.23	-9.60	2.52	12.63	.2199	.0503	-.0364	-.7448	.3804	.3822
2.010	4.23	-9.57	4.19	12.60	.2200	.0506	-.0364	-.7844	.3854	.5740
2.010	4.23	-9.58	5.88	12.61	.2200	.0505	-.0364	-.7712	.3822	.4648
2.010	4.23	-9.58	7.55	12.61	.2196	.0504	-.0363	-.8838	.3880	.9324
2.010	4.23	-9.59	7.55	15.14	.2208	.0504	-.0366	-.7968	.3869	.4868
2.010	4.23	-9.61	5.88	15.14	.2204	.0504	-.0364	-.7443	.3813	.2463
2.010	4.23	-9.61	4.19	15.14	.2193	.0504	-.0363	-.7508	.3817	.2631
2.010	4.23	-9.62	2.52	15.14	.2201	.0505	-.0364	-.7380	.3810	.2446
2.010	4.23	-9.60	0.83	15.13	.2201	.0504	-.0364	-.7381	.3799	.2294
2.010	4.48	1.98	2.51	1.27	.2425	.0549	-.0301	-.5117	.2058	.2398
2.010	4.44	2.02	1.67	1.27	.2349	.0538	-.0299	-.5805	.1792	1.1061
2.010	4.38	2.10	0.85	1.24	.2261	.0525	-.0302	-.6168	.1546	1.8732
2.010	4.31	2.15	0.00	1.21	.2197	.0513	-.0316	-.6520	.1341	2.5485
2.010	4.28	4.15	0.00	0.51	.2118	.0502	-.0306	-.3532	.1314	1.1795
2.010	4.34	4.10	0.84	0.52	.2181	.0511	-.0295	-.2995	.1596	.4544
2.010	4.41	4.03	1.67	0.55	.2256	.0525	-.0284	-.2394	.1937	-.3029
2.010	4.41	3.83	1.65	1.39	.2329	.0535	-.0309	-.4565	.1437	1.1773
2.010	4.35	4.12	0.83	1.23	.2226	.0519	-.0307	-.4528	.1250	1.7058
2.010	4.29	4.20	-0.01	1.20	.2168	.0508	-.0317	-.4948	.1105	2.4432
2.010	4.40	7.09	2.51	1.22	.2345	.0536	-.0317	-.0958	.1679	-.1757
2.010	4.36	7.14	1.68	1.21	.2271	.0525	-.0316	-.1561	.1420	.6731
2.010	4.31	7.20	0.83	1.20	.2199	.0513	-.0319	-.2047	.1261	1.5186
2.010	4.26	21.69	2.46	10.72	.2134	.0502	-.0324	-.2202	.1130	2.2919
2.010	4.26	7.26	0.00	1.19	.2131	.0502	-.0323	-.2218	.1232	2.2648
2.010	4.36	7.14	1.68	1.21	.2274	.0525	-.0316	-.1504	.1478	.6259
2.010	5.89	13.09	0.89	2.05	.2692	.0630	-.0441	.4728	.2781	2.2051
2.010	5.92	13.02	1.73	2.04	.2773	.0644	-.0448	.4540	.2688	1.3510
2.010	5.95	12.89	2.56	2.07	.2858	.0656	-.0461	.4541	.2675	.3700
2.010	5.98	12.72	4.24	2.10	.2968	.0671	-.0482	.4063	.2681	-1.4137
2.010	5.87	12.65	7.58	3.38	.2937	.0654	-.0535	.4785	.3738	-1.8778

TABLE II.- AERODYNAMIC CHARACTERISTICS OF RETURN COMPONENT AND BOMB POD WITH MUTUAL INTERFERENCE; $\beta_P = 0^o$; $\beta_R = 0^o$ - Continued

M	α_R, deg	α_P, deg	x_a, in.	z_a, in.	$C_{L,R}$	$C_{D,R}$	$C_{m,R}$	$C_{L,P}$	$C_{D,P}$	$C_{m,P}$
2.010	5.89	12.73	5.92	3.36	.2917	.0655	-.0515	.5155	.3088	-1.3099
2.010	5.93	12.87	4.24	3.35	.2905	.0655	-.0491	.6059	.3120	-.1540
2.010	5.95	13.04	2.56	3.31	.2843	.0650	-.0460	.6327	.3248	1.3940
2.010	5.93	13.09	1.72	3.32	.2791	.0644	-.0448	.5292	.3153	2.4929
2.010	5.92	13.11	0.88	3.31	.2743	.0639	-.0439	.5275	.3172	2.6877
2.010	5.92	13.12	2.56	4.99	.2860	.0649	-.0477	.5792	.3265	2.4933
2.010	5.90	13.07	4.24	5.00	.2871	.0648	-.0495	.6426	.3553	1.8714
2.010	5.86	12.96	5.97	5.01	.2862	.0644	-.0513	.6756	.3407	.3387
2.010	5.83	12.82	7.59	5.03	.2846	.0638	-.0526	.6077	.3259	-.8223
2.010	5.86	11.01	0.02	2.02	.2653	.0621	-.0446	.2318	.2278	2.4091
2.010	5.90	11.03	0.87	2.01	.2730	.0636	-.0445	.1831	.2109	2.2719
2.010	5.94	10.89	1.70	2.07	.2819	.0650	-.0452	.1452	.1946	1.5725
2.010	5.97	10.82	2.54	2.07	.2886	.0661	-.0459	.1897	.2028	.4718
2.010	5.99	10.69	4.22	2.10	.2983	.0674	-.0483	.2163	.2202	-1.1536
2.010	5.86	10.66	7.58	3.35	.2942	.0654	-.0542	.3190	.3208	-1.6997
2.010	5.89	10.68	5.90	3.36	.2934	.0656	-.0522	.3421	.2534	-1.2636
2.010	5.92	10.80	4.22	3.34	.2917	.0656	-.0497	.3492	.2443	-.0851
2.010	5.95	10.95	2.57	3.32	.2879	.0655	-.0467	.3134	.2423	1.4818
2.010	5.95	10.99	1.71	3.31	.2842	.0652	-.0455	.2967	.2407	2.1067
2.010	5.94	11.02	0.87	3.31	.2778	.0646	-.0440	.2506	.2301	2.4972
2.010	5.92	11.01	0.02	3.29	.2723	.0637	-.0433	.3662	.2574	2.0425
2.010	5.95	11.00	0.02	4.97	.2802	.0647	-.0446	.8128	.3691	.5433
2.010	5.94	11.02	0.87	4.97	.2836	.0649	-.0458	.6481	.3191	1.1489
2.010	5.92	11.04	2.55	4.98	.2869	.0651	-.0483	.2944	.2400	2.5168
2.010	5.89	10.96	4.22	4.99	.2879	.0650	-.0501	.4132	.2729	1.3643
2.010	5.85	10.84	5.90	5.01	.2867	.0642	-.0519	.4536	.2737	.1745
2.010	5.82	10.75	7.58	5.00	.2849	.0638	-.0530	.3906	.2581	-.7621
2.010	5.85	10.92	7.58	7.51	.2787	.0634	-.0494	.5487	.3050	.7836
2.010	5.87	8.90	0.86	7.50	.2881	.0648	-.0511	.8134	.3559	-.3625
2.010	5.84	8.95	2.56	7.48	.2871	.0644	-.0526	.6981	.3223	.1232
2.010	5.82	8.91	4.22	7.51	.2841	.0636	-.0524	.4223	.2504	1.2727
2.010	5.83	8.90	5.90	7.51	.2800	.0633	-.0509	.2357	.2181	1.7022
2.010	5.91	5.79	0.01	2.11	.2750	.0638	-.0446	-.5360	.0833	3.3645
2.010	5.96	5.75	0.85	2.12	.2825	.0652	-.0445	-.5022	.1029	2.7785
2.010	6.00	5.67	1.68	2.15	.2906	.0666	-.0450	-.4475	.1231	1.9612
2.010	6.02	5.61	2.51	2.15	.2973	.0676	-.0461	-.3654	.1396	.9852
2.010	6.02	5.50	4.19	2.16	.3055	.0685	-.0491	-.2030	.1813	-.8299
2.010	5.84	5.53	7.55	3.38	.2970	.0656	-.0560	-.0436	.2393	-1.3262
2.010	5.87	5.53	5.86	3.40	.2976	.0660	-.0543	-.1055	.1773	-.7635
2.010	5.92	5.63	4.20	3.38	.2979	.0664	-.0518	-.1829	.1672	.3328
2.010	5.97	5.68	2.52	3.40	.2960	.0666	-.0484	-.3765	.1227	2.0056
2.010	5.98	5.78	1.68	3.37	.2913	.0662	-.0462	-.4503	.1026	2.7216
2.010	5.98	5.81	0.85	3.36	.2863	.0657	-.0446	-.5301	.0817	3.4394
2.010	5.97	5.80	0.01	3.37	.2807	.0650	-.0438	-.4187	.0831	3.2430
2.010	5.96	5.83	0.01	5.00	.2864	.0656	-.0456	.1142	.1829	1.2228
2.010	5.95	5.85	0.85	5.02	.2894	.0655	-.0472	-.1278	.1427	2.2877
2.010	5.91	5.84	2.52	5.02	.2915	.0656	-.0501	-.3363	.1169	2.9043
2.010	5.87	5.77	4.20	5.02	.2913	.0651	-.0523	-.2289	.1475	1.7543
2.010	5.83	5.71	5.86	5.01	.2887	.0644	-.0538	-.0682	.1760	.4379
2.010	5.80	5.63	7.55	5.03	.2850	.0632	-.0540	-.0634	.1734	-.2151
2.010	5.84	5.74	7.55	7.52	.2761	.0630	-.0488	-.0514	.1698	.9946
2.010	5.82	5.81	5.86	7.52	.2799	.0632	-.0511	-.1275	.1554	2.0151
2.010	5.81	5.80	4.20	7.53	.2834	.0634	-.0529	.0149	.1734	1.7492
2.010	5.82	5.81	2.52	7.51	.2868	.0641	-.0533	.3410	.2362	.3435
2.010	5.86	5.80	0.85	7.51	.2886	.0648	-.0521	.4711	.2673	-.2525
2.010	5.82	5.83	0.85	9.99	.2822	.0633	-.0522	.5428	.2731	-.4687
2.010	5.83	5.83	2.52	9.98	.2784	.0631	-.0502	.4905	.2662	-.2576
2.010	5.84	5.80	4.20	10.00	.2756	.0630	-.0485	.4848	.2614	-.2710
2.010	5.84	5.80	5.87	10.01	.2756	.0630	-.0486	.4010	.2358	.0853
2.010	5.85	5.83	7.55	10.02	.2767	.0630	-.0485	.1062	.1858	1.4375
2.010	5.98	0.66	0.01	2.16	.2839	.0655	-.0439	-1.0831	.1321	4.1454
2.010	6.03	0.61	0.84	2.17	.2919	.0671	-.0436	-1.0003	.1588	3.2899
2.010	6.07	0.56	1.70	2.18	.3019	.0687	-.0452	-.9247	.1848	2.4825
2.010	6.07	0.51	2.54	2.19	.3070	.0694	-.0466	-.8425	.2079	1.6599
2.010	6.03	0.40	4.20	2.19	.3125	.0694	-.0508	-.6372	.2363	-.3008
2.010	5.81	0.39	7.55	3.43	.3000	.0657	-.0586	-.4212	.2438	-.9168
2.010	5.86	0.43	5.88	3.43	.3023	.0665	-.0568	-.5089	.2048	-.1528
2.010	5.91	0.46	4.20	3.44	.3038	.0669	-.0543	-.5650	.2060	.6036
2.010	5.98	0.54	2.53	3.45	.3033	.0674	-.0505	-.7802	.1749	2.1872
2.010	6.00	0.61	1.69	3.44	.3005	.0674	-.0482	-.8888	.1607	3.1374
2.010	6.01	0.66	0.84	3.43	.2957	.0670	-.0465	-.9899	.1231	3.9931
2.010	5.99	0.70	0.01	3.43	.2913	.0666	-.0459	-1.0579	.0879	4.7210
2.010	5.99	0.72	0.01	5.06	.2920	.0664	-.0463	-.5447	.1440	2.8282
2.010	5.96	0.75	0.84	5.06	.2945	.0664	-.0487	-.7623	.1323	3.7909
2.010	5.91	0.72	2.54	5.07	.2962	.0658	-.0522	-.8253	.1506	3.5949
2.010	5.86	0.63	4.20	5.06	.2953	.0655	-.0546	-.6035	.1927	1.8475
2.010	5.82	0.57	5.88	5.06	.2911	.0643	-.0557	-.4835	.1949	.7849
2.010	5.80	0.54	7.55	5.06	.2878	.0634	-.0555	-.5034	.1983	.5977
2.010	5.85	0.62	7.55	7.54	.2764	.0631	-.0487	-.3984	.1799	1.0521
2.010	5.83	0.69	5.88	7.54	.2791	.0632	-.0509	-.5339	.1601	2.2479

TABLE II. - AERODYNAMIC CHARACTERISTICS OF RETURN COMPONENT AND BOMB POD WITH MUTUAL INTERFERENCE; $\beta_P = 0^o$; $\beta_R = 0^o$ - Continued

M	α_R, deg	α_P, deg	x_a, in.	z_a, in.	$C_{L,R}$	$C_{D,R}$	$C_{m,R}$	$C_{L,P}$	$C_{D,P}$	$C_{m,P}$
2.010	5.81	0.73	4.20	7.54	.2847	.0633	-.0539	-.5304	.1482	2.7004
2.010	5.81	0.72	2.54	7.52	.2887	.0641	-.0548	-.1949	.1621	1.1809
2.010	5.85	0.69	0.84	7.53	.2919	.0651	-.0541	.0156	.1977	.2354
2.010	5.81	0.70	0.84	10.02	.2920	.0632	-.0527	.0810	.2066	-.0080
2.010	5.84	0.70	2.54	10.02	.2777	.0631	-.0498	.0613	.2049	.0726
2.010	5.84	0.73	4.20	10.00	.2751	.0628	-.0485	.0417	.1972	.1383
2.010	5.85	0.75	5.88	10.01	.2765	.0630	-.0487	-.1559	.1678	1.0655
2.010	5.86	0.74	7.55	10.04	.2766	.0631	-.0484	-.4262	.1559	2.2696
2.010	5.86	0.67	7.55	12.55	.2766	.0633	-.0483	.0550	.2020	.0744
2.010	5.85	0.67	5.88	12.55	.2755	.0631	-.0482	.0747	.2044	.0088
2.010	5.86	0.66	4.20	12.55	.2771	.0633	-.0484	.1209	.2038	-.1846
2.010	5.85	0.68	2.54	12.53	.2771	.0631	-.0487	.1339	.2062	-.2334
2.010	5.85	0.69	0.84	12.53	.2768	.0630	-.0487	.1404	.2050	-.2351
2.010	5.85	0.68	0.84	15.05	.2757	.0632	-.0482	.1405	.2040	-.2504
2.010	5.85	0.67	2.54	15.05	.2763	.0632	-.0483	.1274	.2049	-.2167
2.010	5.85	0.67	4.20	15.05	.2756	.0631	-.0482	.1209	.2038	-.1998
2.010	5.86	0.67	5.88	15.05	.2765	.0632	-.0483	.1145	.2029	-.1981
2.010	5.85	0.67	7.55	15.05	.2754	.0631	-.0481	.1082	.2022	-.2115
2.010	5.85	-4.46	7.55	15.09	.2754	.0631	-.0482	-.2679	.2438	.0462
2.010	5.85	-4.46	5.87	15.09	.2761	.0631	-.0482	-.2676	.2460	.0462
2.010	5.85	-4.44	4.19	15.08	.2750	.0630	-.0481	-.2551	.2442	.0428
2.010	5.85	-4.44	2.51	15.08	.2765	.0632	-.0484	-.2551	.2430	.0276
2.010	5.86	-4.44	0.83	15.07	.2767	.0633	-.0483	-.2550	.2431	-.0027
2.010	5.85	-4.40	0.83	12.54	.2767	.0630	-.0488	-.2620	.2404	.0294
2.010	5.85	-4.45	2.51	12.56	.2766	.0630	-.0487	-.2551	.2405	-.0026
2.010	5.86	-4.46	4.19	12.56	.2765	.0632	-.0483	-.3079	.2404	.2230
2.010	5.86	-4.48	5.87	12.57	.2765	.0634	-.0483	-.3345	.2409	.3510
2.010	5.85	-4.44	7.55	12.55	.2755	.0631	-.0482	-.3751	.2302	.5127
2.010	5.86	-4.39	7.55	10.08	.2771	.0632	-.0484	-.8781	.2412	2.8069
2.010	5.84	-4.37	5.87	10.06	.2748	.0626	-.0485	-.7674	.2268	2.4755
2.010	5.85	-4.42	4.19	10.06	.2764	.0631	-.0488	-.4218	.2320	.7821
2.010	5.84	-4.45	2.51	10.07	.2779	.0632	-.0495	-.3409	.2442	.3679
2.010	5.80	-4.39	0.83	10.03	.2835	.0633	-.0535	-.3281	.2456	.3645
2.010	5.82	-4.47	0.84	7.61	.2971	.0654	-.0569	-.4677	.2352	.9758
2.010	5.79	-4.38	2.51	7.59	.2908	.0640	-.0567	-.7947	.2227	2.6187
2.010	5.79	-4.39	4.19	7.60	.2848	.0631	-.0546	-1.0438	.2505	3.6069
2.010	5.82	-4.46	5.87	7.59	.2777	.0628	-.0504	-.8867	.2647	2.3265
2.010	5.84	-4.51	7.55	7.58	.2765	.0629	-.0489	-.8101	.2693	1.4611
2.010	5.77	-4.61	7.52	5.12	.2885	.0632	-.0568	-1.0193	.3044	1.3205
2.010	5.78	-4.58	5.87	5.12	.2937	.0643	-.0580	-.9756	.2956	1.4763
2.010	5.82	-4.50	4.19	5.11	.2987	.0654	-.0574	-1.0198	.2919	2.2584
2.010	5.88	-4.40	2.51	5.10	.3022	.0667	-.0553	-1.2384	.2758	3.9785
2.010	5.97	-4.35	0.84	5.12	.3005	.0671	-.0501	-1.4117	.2388	5.4453
2.010	6.00	-4.33	0.00	5.10	.2995	.0674	-.0480	-1.2548	.2121	4.8277
2.010	5.98	-4.53	2.52	3.46	.3134	.0686	-.0537	-1.2461	.3281	2.7421
2.010	5.89	-4.62	4.20	3.48	.3139	.0679	-.0585	-1.0489	.3265	1.1031
2.010	5.81	-4.66	5.87	3.45	.3092	.0667	-.0616	-1.0582	.3257	.5013
2.010	5.77	-4.76	7.55	3.46	.3046	.0654	-.0625	-.9271	.3480	-.6368
2.010	5.76	-7.73	7.56	5.16	.2880	.0628	-.0574	-1.4219	.4313	1.6497
2.010	5.76	-7.64	5.87	5.15	.2961	.0642	-.0600	-1.3434	.4005	1.9604
2.010	5.80	-7.57	4.19	5.15	.3034	.0656	-.0604	-1.2883	.3960	2.3547
2.010	5.87	-7.44	2.51	5.13	.3076	.0673	-.0578	-1.4862	.4069	4.0721
2.010	5.95	-7.39	0.84	5.16	.3085	.0677	-.0537	-1.7337	.3896	5.9071
2.010	5.79	-9.54	0.83	7.65	.3014	.0652	-.0602	-1.0983	.4082	2.1252
2.010	5.77	-9.53	2.52	7.67	.2940	.0638	-.0590	-1.4893	.4403	3.9977
2.010	5.78	-9.53	4.19	7.65	.2855	.0630	-.0554	-1.5084	.4718	3.7173
2.010	5.83	-9.61	5.88	7.65	.2793	.0631	-.0504	-1.3172	.4685	2.2900
2.010	5.84	-9.68	7.55	7.66	.2765	.0629	-.0490	-1.3411	.4603	1.7372
2.010	5.85	-9.62	7.56	10.19	.2757	.0631	-.0481	-1.3347	.4582	2.8693
2.010	5.85	-9.56	5.88	10.18	.2768	.0629	-.0487	-1.3878	.4345	3.4703
2.010	5.84	-9.61	4.19	10.17	.2767	.0630	-.0490	-1.0193	.3880	1.6935
2.010	5.84	-9.62	2.52	10.16	.2767	.0630	-.0492	-.7980	.3849	.5928
2.010	5.80	-9.59	0.83	10.14	.2836	.0631	-.0539	-.8030	.3965	.6399
2.010	5.84	-9.57	0.83	12.60	.2757	.0629	-.0487	-.7175	.3834	.2241
2.010	5.85	-9.58	2.51	12.61	.2768	.0630	-.0485	-.7318	.3778	.3031
2.010	5.85	-9.59	4.19	12.62	.2759	.0632	-.0482	-.7842	.3837	.5587
2.010	5.85	-9.55	5.88	12.59	.2755	.0632	-.0482	-.7849	.3776	.5132
2.010	5.85	-9.53	7.55	12.61	.2754	.0631	-.0481	-.9591	.3797	1.4636
2.010	5.86	-9.59	7.55	15.14	.2761	.0631	-.0482	-.7755	.3887	.4508
2.010	5.85	-9.59	0.83	15.13	.2756	.0630	-.0481	-.7163	.3809	.2086
2.010	4.61	4.01	2.52	1.30	.2978	.0621	-.0413	-.4790	.1773	.1835
2.010	4.56	4.04	1.67	1.32	.2905	.0610	-.0415	-.5535	.1416	1.1859
2.010	4.49	4.13	0.83	1.28	.2803	.0592	-.0421	-.5961	.1180	2.0889
2.010	4.43	4.19	-0.01	1.27	.2743	.0582	-.0433	-.6302	.0918	2.7777
2.010	4.42	6.13	-0.01	0.60	.2687	.0574	-.0424	-.3330	.1120	1.4103
2.010	4.47	6.13	0.84	0.58	.2728	.0582	-.0410	-.2672	.1439	.5340
2.010	4.53	6.08	1.68	0.58	.2808	.0594	-.0401	-.1949	.1811	-.3900
2.010	4.58	6.03	2.51	1.30	.2946	.0614	-.0420	-.3167	.1537	.0500
2.010	4.53	6.12	1.68	1.27	.2863	.0601	-.0421	-.3908	.1221	1.0363
2.010	4.47	6.18	0.83	1.27	.2783	.0588	-.0426	-.4257	.0976	1.8914

TABLE II.- AERODYNAMIC CHARACTERISTICS OF RETURN COMPONENT AND BOMB POD WITH MUTUAL INTERFERENCE; $\beta_P = 0^o$; $\beta_R = 0^o$ - Concluded

M	α_R, deg	α_P, deg	x_a, in.	z_a, in.	$C_{L,R}$	$C'_{D,R}$	$C_{m,R}$	$C_{L,P}$	$C'_{D,P}$	$C_{m,P}$
2.010	4.41	6.22	0.00	1.26	.2707	.0576	-.0432	-.4479	.0858	2.6216
2.010	4.38	9.35	0.01	1.21	.2672	.0570	-.0440	-.1411	.1267	2.4785
2.010	4.42	9.28	0.85	1.23	.2738	.0580	-.0435	-.1301	.1302	1.6306
2.010	4.48	9.20	1.69	1.25	.2825	.0594	-.0434	-.1007	.1437	.7465
2.010	4.53	9.14	2.55	1.25	.2906	.0606	-.0431	-.0590	.1645	-.2465

TABLE III.- AERODYNAMIC CHARACTERISTICS OF RETURN COMPONENT AND BOMB POD LESS FINS WITH MUTUAL INTERFERENCE; $\beta_P = 0^{\circ}$; $\beta_R = 0^{\circ}$

M	α_R, deg	α_P, deg	x_a, in.	z_a, in.	$C_{L,R}$	$C'_{D,R}$	$C_{m,R}$	$C_{L,P}$	$C'_{D,P}$	$C_{m,P}$
1.570	-0.38	12.51	0.89	2.02	.0278	.0323	.0138	.4747	.3332	1.4282
1.570	-0.32	12.50	1.73	2.01	.0346	.0328	.0146	.4693	.3352	1.1876
1.570	-0.26	12.43	2.56	2.03	.0428	.0336	.0149	.4218	.3223	.8929
1.570	-0.14	12.37	4.24	2.07	.0638	.0346	.0135	.3269	.3365	.7015
1.570	-0.31	12.39	7.59	3.36	.0692	.0332	.0037	.4603	.4086	.9558
1.570	-0.21	12.38	4.24	3.34	.0616	.0340	.0111	.3826	.3115	.9814
1.570	-0.27	12.46	1.72	3.31	.0417	.0334	.0144	.4748	.2970	1.4228
1.570	-0.24	12.49	2.95	5.07	.0569	.0337	.0111	.5323	.2974	1.4480
1.570	-0.28	12.45	4.24	5.00	.0575	.0334	.0089	.5016	.3127	1.2151
1.570	-0.39	12.46	7.59	5.01	.0603	.0326	.0027	.5010	.3716	1.0519
1.570	-0.40	10.37	7.58	4.99	.0590	.0325	.0027	.3015	.3101	1.0905
1.570	-0.27	10.35	4.22	5.01	.0608	.0334	.0080	.2732	.2405	1.1837
1.570	-0.22	10.41	2.55	4.99	.0588	.0337	.0112	.2900	.2286	1.5523
1.570	-0.25	10.42	0.86	4.98	.0462	.0335	.0138	.3311	.2534	1.6456
1.570	-0.28	10.44	0.02	4.96	.0423	.0332	.0136	.3683	.2733	1.5152
1.570	-0.35	10.48	0.03	3.24	.0322	.0328	.0135	.3140	.2508	1.5830
1.570	-0.25	10.41	1.71	3.29	.0444	.0336	.0144	.2552	.2365	1.3066
1.570	-0.19	10.34	4.22	3.33	.0660	.0342	.0101	.2132	.2592	.9308
1.570	-0.31	10.40	7.59	3.32	.0713	.0331	.0028	.2881	.3509	.9198
1.570	-0.13	10.30	4.22	2.08	.0650	.0347	.0134	.1644	.2841	.6896
1.570	-0.23	10.35	2.55	2.03	.0453	.0335	.0151	.2693	.2731	.6891
1.570	-0.30	10.36	1.71	2.03	.0376	.0329	.0145	.2680	.2689	1.0214
1.570	-0.36	10.43	0.87	1.99	.0278	.0325	.0145	.2756	.2479	1.2852
1.570	-0.40	10.42	0.02	2.00	.0242	.0324	.0137	.2547	.2295	1.5302
1.570	-0.35	5.17	0.01	2.07	.0278	.0325	.0152	.0055	.1770	.7501
1.570	-0.29	5.14	0.85	2.08	.0345	.0330	.0158	.0167	.1997	.4550
1.570	-0.22	5.10	1.68	2.11	.0452	.0336	.0156	.0461	.2093	.1155
1.570	-0.15	5.12	2.52	2.11	.0556	.0342	.0154	.0228	.2143	.1077
1.570	-0.03	5.09	4.20	2.14	.0745	.0353	.0126	-.0064	.2393	-.0435
1.570	-0.33	5.18	7.55	3.36	.0722	.0332	.0015	.1289	.2965	.0648
1.570	-0.17	5.14	4.20	3.37	.0731	.0344	.0088	.0122	.2007	.2439
1.570	-0.19	5.19	1.69	3.34	.0531	.0339	.0142	.0056	.1875	.5509
1.570	-0.30	5.21	0.02	3.32	.0366	.0331	.0146	.0156	.1734	.9857
1.570	-0.23	5.24	0.01	4.99	.0482	.0337	.0140	.0158	.1678	1.0388
1.570	-0.20	5.24	0.85	5.00	.0544	.0339	.0134	-.0019	.1708	1.0964
1.570	-0.20	5.24	2.52	5.01	.0667	.0342	.0095	.0102	.1761	.8942
1.570	-0.26	5.20	4.20	5.02	.0702	.0335	.0054	.0406	.1805	.4886
1.570	-0.40	5.21	7.55	5.01	.0644	.0324	.0005	.0692	.2400	.4795
1.570	-0.38	5.22	7.55	10.02	.0459	.0323	.0078	.0603	.1887	.8805
1.570	-0.42	5.23	4.20	10.02	.0515	.0319	.0037	.0833	.1840	.8746
1.570	-0.35	5.28	0.85	10.01	.0632	.0329	.0034	.0878	.1841	1.0456
1.570	-0.28	0.02	0.01	2.09	.0331	.0328	.0169	-.1061	.2072	-.2373
1.570	-0.21	-0.01	0.84	2.10	.0400	.0335	.0178	-.0986	.2121	-.5306
1.570	-0.13	0.00	1.70	2.10	.0508	.0342	.0181	-.0861	.2099	-.7459
1.570	-0.06	-0.01	2.54	2.13	.0671	.0349	.0161	-.1085	.2184	-.7663
1.570	-0.03	-0.05	4.20	2.16	.0827	.0356	.0125	-.1071	.2414	-.9656
1.570	-0.34	0.01	7.55	3.39	.0779	.0332	-.0011	.0274	.2869	-.8689
1.570	-0.15	-0.06	4.20	3.43	.0800	.0344	.0074	-.0919	.1993	-.5646
1.570	-0.10	-0.01	1.70	3.41	.0704	.0346	.0131	-.0931	.1955	-.4375
1.570	-0.18	0.02	0.01	3.38	.0534	.0334	.0146	-.1122	.1829	-.0235
1.570	-0.13	0.06	0.01	5.05	.0643	.0341	.0133	-.1186	.1647	.1491
1.570	-0.10	0.05	0.84	5.07	.0748	.0346	.0114	-.1239	.1656	.1242
1.570	-0.14	0.04	2.54	5.07	.0808	.0344	.0072	-.0887	.1830	-.1476
1.570	-0.23	0.02	4.20	5.08	.0828	.0337	.0023	-.0763	.1805	-.3473
1.570	-0.40	0.05	7.55	5.04	.0719	.0321	-.0021	-.0311	.2340	-.4637
1.570	-0.35	0.12	7.55	10.01	.0518	.0321	.0069	-.0386	.1890	-.1343
1.570	-0.40	0.10	4.20	10.03	.0586	.0318	.0021	-.0448	.1654	-.0018
1.570	-0.35	0.12	0.84	10.04	.0696	.0329	.0009	-.0400	.1752	.1012
1.570	-0.37	0.11	0.84	15.04	.0471	.0322	.0075	-.0122	.1783	.1197
1.570	-0.36	0.10	4.20	15.05	.0471	.0322	.0078	-.0005	.1783	.0254
1.570	-0.36	0.09	7.55	15.05	.0461	.0324	.0092	-.0227	.1759	.0313
1.570	-0.36	-5.07	7.55	15.09	.0474	.0324	.0079	-.1629	.2134	-.7716
1.570	-0.36	-5.05	4.19	15.07	.0480	.0322	.0078	-.1578	.2105	-.7602
1.570	-0.36	-5.02	0.83	15.05	.0480	.0323	.0073	-.1461	.2174	-.7629
1.570	-0.37	-5.04	0.83	10.06	.0725	.0328	-.0012	-.1751	.2025	-.7819
1.570	-0.43	-5.06	4.19	10.05	.0529	.0316	.0026	-.1968	.2061	-.8020
1.570	-0.37	-5.11	7.55	10.07	.0471	.0321	.0074	-.1711	.2272	-1.0162
1.570	-0.44	-5.15	7.55	5.09	.0708	.0321	-.0036	-.1876	.2776	-1.2591
1.570	-0.26	-5.12	4.19	5.10	.0819	.0337	.0013	-.2383	.2274	-.9991
1.570	-0.14	-5.13	2.51	5.10	.0803	.0342	.0073	-.2324	.2310	-1.0004
1.570	-0.07	-5.09	0.84	5.08	.0743	.0348	.0126	-.2687	.2165	-.7573
1.570	-0.09	-5.09	-0.01	5.08	.0659	.0346	.0147	-.2761	.2009	-.6644
1.570	-0.13	-5.07	-0.01	3.39	.0487	.0342	.0194	-.2773	.2409	-.8461
1.570	-0.03	-5.17	1.68	3.44	.0758	.0353	.0141	-.2745	.2501	-1.1463
1.570	-0.12	-5.17	4.19	3.46	.0870	.0347	.0059	-.2738	.2485	-1.3038
1.570	-0.35	-5.14	7.55	3.41	.0836	.0331	-.0039	-.1321	.3155	-1.6113
1.570	0.04	-5.22	4.19	2.21	.0924	.0358	.0119	-.3178	.2974	-1.5641
1.570	0.05	-5.18	2.51	2.18	.0775	.0357	.0172	-.3268	.2754	-1.3540
1.570	0.00	-5.20	1.67	2.19	.0662	.0350	.0185	-.3057	.2643	-1.2943
1.570	-0.11	-5.16	0.84	2.15	.0483	.0341	.0196	-.2838	.2697	-1.1959

TABLE III.- AERODYNAMIC CHARACTERISTICS OF RETURN COMPONENT AND BOMB POD LESS FINS WITH MUTUAL INTERFERENCE; $\beta_P = 0^o$; $\beta_R = 0^o$ - Continued

M	α_R, deg	α_P, deg	x_a, in.	z_a, in.	$C_{L,R}$	$C_{D',R}$	$C_{m,R}$	$C_{L,P}$	$C_{D',P}$	$C_{m,P}$
1.570	-0.20	-5.11	-0.01	2.13	.0388	.0334	.0181	-.2639	.2555	-1.0323
1.570	-0.11	-8.28	4.19	3.48	.0947	.0348	.0041	-.4861	.3093	-1.4487
1.570	-0.38	-8.24	7.55	3.46	.0857	.0329	-.0059	-.3246	.3622	-1.8665
1.570	-0.45	-8.27	7.55	5.13	.0729	.0316	-.0051	-.3610	.3149	-1.5849
1.570	-0.27	-8.22	4.19	5.15	.0872	.0337	-.0008	-.4187	.2762	-1.2573
1.570	-0.13	-8.16	2.51	5.12	.0848	.0343	.0063	-.3955	.2802	-1.3285
1.570	-0.04	-8.21	0.83	5.15	.0800	.0350	.0122	-.4200	.2712	-1.1136
1.570	-0.04	-8.21	0.00	5.15	.0735	.0350	.0144	-.4344	.2525	-1.0190
1.570	-0.40	-10.25	0.83	10.16	.0780	.0326	-.0042	-.4657	.3004	-1.3033
1.570	-0.43	-10.32	4.20	10.16	.0548	.0314	.0018	-.5089	.3087	-1.2647
1.570	-0.38	-10.37	7.56	10.17	.0459	.0321	.0073	-.4913	.3305	-1.5259
1.570	-0.36	-10.25	7.55	15.13	.0475	.0325	.0078	-.4625	.3087	-1.3385
1.570	-0.36	-10.23	4.19	15.12	.0468	.0322	.0078	-.4574	.3074	-1.2616
1.570	-0.36	-10.20	0.83	15.10	.0500	.0323	.0067	-.4273	.3134	-1.3583
1.570	0.00	-2.61	2.53	1.22	.0633	.0348	.0190	-.1955	.2745	-1.3412
1.570	-0.13	-2.60	1.68	1.20	.0499	.0339	.0188	-.1821	.2560	-1.1520
1.570	-0.22	-2.60	0.84	1.21	.0406	.0331	.0173	-.1722	.2467	-.9813
1.570	-0.31	-2.53	0.00	1.17	.0342	.0326	.0153	-.1682	.2378	-.7954
1.570	-0.34	-0.52	0.00	0.50	.0309	.0323	.0141	-.0771	.2380	-.5995
1.570	-0.19	-0.55	1.68	0.53	.0426	.0331	.0174	-.0809	.2524	-.8829
1.570	-0.04	-0.57	2.53	1.22	.0622	.0349	.0178	-.1185	.2456	-1.0290
1.570	-0.14	-0.55	1.69	1.20	.0477	.0338	.0179	-.1088	.2322	-.8373
1.570	-0.23	-0.51	0.84	1.17	.0392	.0330	.0166	-.0989	.2260	-.6979
1.570	-0.31	-0.48	0.01	1.16	.0326	.0325	.0150	-.1059	.2206	-.4633
1.570	-0.33	2.58	0.01	1.16	.0319	.0325	.0142	-.0375	.1963	.0719
1.570	-0.27	2.55	0.86	1.18	.0368	.0329	.0155	-.0199	.2075	-.1914
1.570	-0.19	2.53	1.68	1.20	.0449	.0335	.0164	-.0306	.2156	-.2921
1.570	-0.11	2.56	2.53	1.20	.0544	.0343	.0172	-.0470	.2308	-.4430
1.570	1.52	12.47	0.88	2.03	.1268	.0377	-.0081	.3685	.2845	1.4711
1.570	1.58	12.45	1.73	2.02	.1327	.0384	-.0073	.3597	.2811	1.1390
1.570	1.65	12.39	2.56	2.04	.1416	.0395	-.0069	.2938	.2688	.9835
1.570	1.76	12.30	4.24	2.09	.1565	.0412	-.0065	.1558	.2860	.8382
1.570	1.61	12.35	7.59	3.35	.1641	.0399	-.0169	.2801	.3638	.9136
1.570	1.71	12.33	4.24	3.36	.1592	.0407	-.0102	.2391	.2580	1.0883
1.570	1.63	12.45	1.72	3.30	.1403	.0392	-.0077	.3853	.2580	1.4853
1.570	1.68	12.49	2.56	4.99	.1528	.0402	-.0096	.4738	.2700	1.5938
1.570	1.65	12.41	4.24	5.02	.1569	.0398	-.0123	.4082	.2689	1.1899
1.570	1.52	12.38	7.59	5.04	.1576	.0391	-.0186	.3097	.3255	1.1987
1.570	1.52	10.32	7.58	5.00	.1586	.0389	-.0191	.1742	.2717	1.0648
1.570	1.65	10.32	4.22	5.02	.1589	.0400	-.0129	.1975	.2033	1.1677
1.570	1.68	10.41	2.55	4.98	.1515	.0402	-.0092	.2228	.2056	1.5840
1.570	1.65	10.44	0.86	4.97	.1430	.0394	-.0079	.2689	.2263	1.8074
1.570	1.62	10.43	0.02	4.97	.1394	.0390	-.0081	.3011	.2430	1.6666
1.570	1.55	10.43	0.02	3.28	.1296	.0382	-.0080	.2407	.2249	1.8021
1.570	1.65	10.38	1.71	3.30	.1432	.0396	-.0078	.1834	.2110	1.3161
1.570	1.72	10.27	4.22	3.35	.1616	.0408	-.0104	.0994	.2190	.9165
1.570	1.61	10.33	7.58	3.33	.1671	.0400	-.0177	.1881	.3330	.6762
1.570	1.80	10.25	4.22	2.10	.1616	.0415	-.0067	.0500	.2506	.6114
1.570	1.69	10.31	2.55	2.05	.1445	.0398	-.0066	.1391	.2215	.8131
1.570	1.62	10.32	1.71	2.05	.1364	.0388	-.0071	.1889	.2272	.9055
1.570	1.56	10.36	0.86	2.02	.1292	.0379	-.0076	.1771	.2154	1.2779
1.570	1.52	10.42	0.03	2.00	.1243	.0375	-.0081	.1682	.1888	1.6507
1.570	1.57	5.15	0.01	2.08	.1264	.0380	-.0060	-.0604	.1529	.8040
1.570	1.63	5.14	0.85	2.08	.1330	.0386	-.0055	-.0539	.1687	.4326
1.570	1.69	5.12	1.68	2.09	.1417	.0395	-.0053	-.0354	.1696	.1507
1.570	1.76	5.08	2.52	2.12	.1497	.0406	-.0050	-.0702	.1855	.1068
1.570	1.84	5.03	4.19	2.14	.1646	.0421	-.0059	-.0773	.2325	-.3146
1.570	1.58	5.11	7.55	3.38	.1667	.0399	-.0189	.0686	.2926	-.2098
1.570	1.74	5.09	4.20	3.38	.1669	.0411	-.0112	-.0580	.1785	.0641
1.570	1.71	5.19	1.69	3.33	.1500	.0402	-.0074	-.0372	.1642	.4943
1.570	1.61	5.19	0.01	3.33	.1349	.0387	-.0070	-.0452	.1537	1.0641
1.570	1.57	5.24	0.02	5.00	.1445	.0398	-.0076	-.0397	.1470	1.1856
1.570	1.70	5.23	0.85	5.01	.1501	.0403	-.0079	-.0510	.1500	1.1559
1.570	1.71	5.23	2.52	5.00	.1583	.0407	-.0101	-.0283	.1691	.8213
1.570	1.65	5.18	4.20	5.02	.1623	.0401	-.0141	-.0310	.1563	.5453
1.570	1.50	5.14	7.55	5.03	.1601	.0389	-.0205	.0206	.2322	.2134
1.570	1.52	5.24	7.55	10.01	.1417	.0380	-.0134	.0492	.1844	.8272
1.570	1.49	5.23	4.20	10.03	.1518	.0379	-.0185	.0612	.1691	.9564
1.570	1.57	5.29	0.85	10.01	.1577	.0393	-.0167	.0926	.1842	1.0791
1.570	1.55	0.01	0.01	2.10	.1283	.0386	-.0037	-.1472	.1925	-.2058
1.570	1.74	0.00	0.84	2.10	.1383	.0396	-.0030	-.1455	.1877	-.4898
1.570	1.81	-0.03	1.69	2.12	.1474	.0407	-.0027	-.1607	.1907	-.6792
1.570	1.87	-0.05	2.54	2.13	.1579	.0418	-.0035	-.1708	.2060	-.8317
1.570	1.92	-0.09	4.20	2.16	.1736	.0433	-.0062	-.1574	.2456	-1.2094
1.570	1.58	-0.06	7.55	3.41	.1733	.0404	-.0217	-.0098	.2846	-1.1194
1.570	1.78	-0.09	4.20	3.44	.1740	.0416	-.0126	-.1434	.1800	-.7871
1.570	1.80	-0.03	1.70	3.41	.1589	.0413	-.0070	-.1236	.1777	-.4830
1.570	1.71	0.01	0.01	3.38	.1413	.0399	-.0053	-.1484	.1668	.0137
1.570	1.75	0.06	0.01	5.05	.1522	.0407	-.0069	-.1497	.1360	.2332
1.570	1.78	0.05	0.84	5.06	.1589	.0413	-.0079	-.1379	.1598	.1011

TABLE III.- AERODYNAMIC CHARACTERISTICS OF RETURN COMPONENT AND BOMB POD LESS FINS WITH MUTUAL INTERFERENCE; $\beta_P = 0^o$; $\beta_R = 0^o$ - Continued

M	α_R, deg	α_P, deg	x_a, in.	z_a, in.	$C_{L,R}$	$C'_{D,R}$	$C_{m,R}$	$C_{L,P}$	$C'_{D,P}$	$C_{m,P}$
1.570	1.76	0.02	2.54	5.07	.1663	.0413	-.0114	-.1030	.1709	-.2302
1.570	1.67	0.03	4.20	5.06	.1685	.0406	-.0161	-.1190	.1662	-.3163
1.570	1.49	0.04	7.55	5.03	.1631	.0387	-.0227	-.0622	.2294	-.6793
1.570	1.55	0.11	7.55	10.01	.1430	.0382	-.0135	-.0485	.1706	-.1933
1.570	1.49	0.11	4.20	10.03	.1513	.0379	-.0189	-.0668	.1541	.1207
1.570	1.56	0.12	0.84	10.04	.1607	.0395	-.0188	-.0286	.1712	.1233
1.570	1.54	0.09	0.84	15.07	.1439	.0382	-.0140	-.0010	.1794	.1159
1.570	1.55	0.10	4.20	15.05	.1432	.0383	-.0135	.0051	.1749	-.0015
1.570	1.55	0.10	7.55	15.06	.1424	.0386	-.0131	-.0171	.1721	.0558
1.570	1.55	-5.18	7.55	3.42	.1755	.0403	-.0241	-.2106	.3307	-1.7127
1.570	1.80	-5.18	4.19	3.46	.1792	.0421	-.0134	-.3529	.2474	-1.2518
1.570	1.88	-5.15	1.68	3.42	.1654	.0423	-.0053	-.3268	.2449	-1.0527
1.570	1.80	-5.08	-0.01	3.39	.1451	.0406	-.0025	-.3082	.2267	-.8009
1.570	1.82	-5.11	0.00	5.09	.1575	.0413	-.0057	-.2967	.1815	-.6246
1.570	1.83	-5.12	0.83	5.10	.1653	.0419	-.0076	-.2884	.2029	-.7551
1.570	1.78	-5.15	2.51	5.11	.1722	.0416	-.0121	-.2635	.2172	-1.0449
1.570	1.67	-5.14	4.19	5.10	.1734	.0410	-.0179	-.2911	.2204	-.9861
1.570	1.46	-5.21	7.55	5.11	.1646	.0383	-.0247	-.2393	.2757	-1.3977
1.570	1.55	-5.09	7.55	10.06	.1437	.0381	-.0138	-.1989	.2072	-.9597
1.570	1.48	-5.05	4.19	10.06	.1509	.0376	-.0194	-.2077	.1911	-.6743
1.570	1.54	-5.03	0.83	10.06	.1637	.0394	-.0208	-.1628	.1966	-.7377
1.570	1.54	-5.01	0.83	15.05	.1434	.0382	-.0138	-.1282	.2133	-.7593
1.570	1.54	-5.00	4.19	15.03	.1414	.0381	-.0133	-.1400	.2033	-.7561
1.570	1.56	-5.10	7.55	15.10	.1433	.0385	-.0132	-.1621	.1986	-.7760
1.570	1.82	-8.34	4.20	3.50	.1855	.0423	-.0148	-.6159	.3364	-1.3058
1.570	1.54	-8.31	7.55	3.49	.1821	.0401	-.0267	-.4460	.3742	-1.9039
1.570	1.45	-8.28	7.55	5.12	.1671	.0382	-.0262	-.4325	.3252	-1.6904
1.570	1.66	-8.25	4.19	5.16	.1782	.0408	-.0197	-.4870	.2749	-1.2134
1.570	1.80	-8.18	2.51	5.12	.1749	.0414	-.0124	-.4530	.2785	-1.2740
1.570	1.87	-8.20	0.83	5.14	.1707	.0423	-.0077	-.4556	.2676	-1.0801
1.570	1.87	-8.22	0.00	5.15	.1638	.0420	-.0054	-.4649	.2469	-.9494
1.570	1.52	-10.22	0.83	10.14	.1708	.0395	-.0240	-.4629	.2956	-1.2804
1.570	1.47	-10.32	4.19	10.17	.1516	.0373	-.0201	-.5174	.3012	-1.2390
1.570	1.54	-10.35	7.55	10.17	.1425	.0380	-.0138	-.5390	.3291	-1.3865
1.570	1.56	-10.25	7.55	15.14	.1440	.0384	-.0133	-.4673	.2977	-1.3163
1.570	1.55	-10.26	4.19	15.15	.1437	.0381	-.0136	-.4486	.3098	-1.2690
1.570	1.54	-10.24	0.83	15.12	.1428	.0382	-.0137	-.4249	.3140	-1.3651
1.570	1.88	-0.56	2.53	1.20	.1542	.0413	-.0016	-.1832	.2384	-1.1889
1.570	1.80	-0.58	1.69	1.21	.1462	.0400	-.0027	-.1793	.2185	-.9320
1.570	1.71	-0.53	0.84	1.18	.1359	.0390	-.0038	-.1757	.2053	-.6751
1.570	1.62	-0.50	0.01	1.17	.1301	.0382	-.0057	-.1719	.1994	-.4052
1.570	1.57	1.52	0.00	0.50	.1261	.0378	-.0066	-.0972	.1885	-.2590
1.570	1.72	1.50	1.67	0.50	.1381	.0390	-.0038	-.1009	.2230	-.7096
1.570	1.85	1.44	2.51	1.24	.1520	.0410	-.0025	-.1216	.2192	-.8587
1.570	1.76	1.45	1.67	1.23	.1427	.0397	-.0035	-.1285	.2033	-.5602
1.570	1.68	1.50	0.85	1.20	.1350	.0388	-.0046	-.1186	.1886	-.3436
1.570	1.60	1.53	0.00	1.18	.1275	.0381	-.0058	-.1257	.1850	-.0580
1.570	1.79	4.56	2.52	1.20	.1492	.0404	-.0040	-.0665	.2080	-.2569
1.570	1.64	4.60	0.84	1.17	.1307	.0385	-.0052	-.0396	.1826	.1621
1.570	1.58	4.68	0.00	1.14	.1262	.0379	-.0065	-.0576	.1724	.5024
1.570	3.59	12.44	0.88	2.03	.2214	.0496	-.0281	.2585	.2281	1.5117
1.570	3.65	12.41	1.73	2.03	.2278	.0508	-.0276	.2395	.2238	1.1172
1.570	3.72	12.36	2.56	2.05	.2356	.0522	-.0268	.1649	.2068	1.0861
1.570	3.85	12.24	4.24	2.10	.2519	.0549	-.0263	.0636	.2495	.6329
1.570	3.70	12.25	7.58	3.38	.2618	.0539	-.0366	.1817	.3535	.6088
1.570	3.78	12.29	4.24	3.37	.2544	.0542	-.0302	.1203	.2076	1.0847
1.570	3.68	12.40	1.72	3.32	.2369	.0519	-.0289	.2872	.2270	1.5181
1.570	3.73	12.48	2.56	4.99	.2457	.0531	-.0295	.4158	.2509	1.6510
1.570	3.72	12.38	4.24	5.02	.2520	.0532	-.0322	.2905	.2190	1.2857
1.570	3.60	12.34	7.58	5.04	.2568	.0526	-.0394	.1777	.2763	1.1438
1.570	3.57	10.38	0.02	2.01	.2186	.0493	-.0280	.1067	.1644	1.6978
1.570	3.62	10.38	0.87	1.99	.2238	.0501	-.0274	.1130	.1758	1.2312
1.570	3.68	10.30	1.71	2.04	.2308	.0513	-.0270	.1043	.1746	.8852
1.570	3.75	10.27	2.54	2.05	.2385	.0526	-.0263	.0387	.1695	.8510
1.570	3.86	10.24	4.22	2.07	.2544	.0552	-.0262	-.0076	.2283	.2922
1.570	3.69	10.25	7.58	3.35	.2626	.0539	-.0372	.1355	.3333	.2626
1.570	3.78	10.25	4.22	3.34	.2551	.0543	-.0302	.0202	.1821	.7906
1.570	3.70	10.34	1.71	3.31	.2387	.0522	-.0287	.1282	.1830	1.2916
1.570	3.60	10.47	0.03	3.25	.2253	.0502	-.0288	.1786	.1896	1.9362
1.570	3.66	10.41	0.02	4.98	.2351	.0516	-.0291	.2327	.2034	1.8693
1.570	3.69	10.40	0.86	4.99	.2388	.0523	-.0289	.1956	.1922	1.9059
1.570	3.74	10.40	2.55	4.98	.2478	.0534	-.0299	.1908	.1979	1.5458
1.570	3.72	10.31	4.22	5.01	.2537	.0534	-.0327	.0981	.1675	1.2228
1.570	3.59	10.27	7.58	5.01	.2570	.0525	-.0399	.0973	.2473	.8579
1.570	3.62	5.29	0.85	10.01	.2509	.0524	-.0362	.0965	.1770	1.0692
1.570	3.52	5.24	4.20	10.03	.2470	.0507	-.0397	.0162	.1439	1.1940
1.570	3.58	5.20	7.55	10.02	.2396	.0507	-.0345	.0282	.1627	.7513
1.570	3.57	5.10	7.55	5.04	.2584	.0525	-.0415	-.0329	.2204	.0177
1.570	3.72	5.12	4.20	5.04	.2560	.0535	-.0335	-.0776	.1335	.4831
1.570	3.76	5.20	2.52	5.01	.2515	.0539	-.0299	-.0422	.1515	.6924

TABLE III.- AERODYNAMIC CHARACTERISTICS OF RETURN COMPONENT AND BOMB POD LESS FINS WITH MUTUAL INTERFERENCE; $\beta_P = 0^o$; $\beta_R = 0^o$ - Continued

M	α_R, deg	α_P, deg	x_a, in.	z_a, in.	$C_{L,R}$	$C_{D,R}$	$C_{m,R}$	$C_{L,P}$	$C_{D,P}$	$C_{m,P}$
1.570	3.75	5.22	0.35	5.00	.2454	.0530	-.0287	-.0757	.1264	1.1403
1.570	3.72	5.24	0.01	4.99	.2389	.0523	-.0280	-.0704	.1184	1.2804
1.570	3.66	5.18	0.01	3.33	.2294	.0509	-.0275	-.0821	.1423	1.0767
1.570	3.75	5.17	1.69	3.33	.2430	.0532	-.0277	-.0623	.1509	.4011
1.570	3.82	5.06	4.20	3.38	.2607	.0552	-.0306	-.1149	.1571	-.0363
1.570	3.67	5.07	7.55	3.37	.2639	.0539	-.0386	.0403	.3068	-.6351
1.570	3.92	4.96	4.19	2.15	.2604	.0560	-.0257	-.1103	.2105	-.6313
1.570	3.93	5.04	2.52	2.12	.2446	.0537	-.0248	-.1202	.1566	-.0476
1.570	3.77	5.06	1.68	2.11	.2365	.0524	-.0250	-.1101	.1504	.1688
1.570	3.71	5.09	0.85	2.10	.2297	.0514	-.0256	-.0948	.1491	.3962
1.570	3.65	5.12	0.01	2.10	.2234	.0504	-.0264	-.0965	.1468	.8266
1.570	3.70	-0.01	0.01	2.10	.2256	.0509	-.0246	-.2073	.1743	-.1500
1.570	3.78	-0.04	0.84	2.12	.2331	.0522	-.0231	-.2223	.1692	-.4164
1.570	3.86	-0.08	1.70	2.13	.2415	.0536	-.0225	-.2427	.1786	-.6687
1.570	3.92	-0.11	2.54	2.15	.2513	.0551	-.0229	-.2354	.1942	-.9542
1.570	3.98	-0.16	4.20	2.17	.2665	.0573	-.0249	-.2267	.2415	-1.4593
1.570	3.66	-0.14	7.55	3.43	.2700	.0544	-.0411	-.0624	.2978	-1.4391
1.570	3.85	-0.13	4.20	3.44	.2665	.0559	-.0311	-.2195	.1651	-.8818
1.570	3.83	-0.05	1.70	3.40	.2490	.0542	-.0263	-.1783	.1644	-.4675
1.570	3.74	0.00	0.01	3.37	.2323	.0519	-.0249	-.1923	.1550	.0389
1.570	3.77	0.05	0.01	5.04	.2442	.0533	-.0272	-.1828	.1183	.2812
1.570	3.79	0.05	0.84	5.04	.2495	.0540	-.0280	-.1651	.1452	.0574
1.570	3.79	0.02	2.54	5.05	.2576	.0546	-.0307	-.1408	.1536	-.3487
1.570	3.73	-0.02	4.20	5.07	.2616	.0542	-.0350	-.1622	.1554	-.4074
1.570	3.54	0.00	7.55	5.03	.2607	.0521	-.0436	-.1156	.2301	-.8969
1.570	3.58	0.07	7.55	10.02	.2380	.0505	-.0342	-.0926	.1559	-.1425
1.570	3.51	0.11	4.20	10.02	.2472	.0505	-.0404	-.1006	.1402	.2594
1.570	3.61	0.11	0.84	10.04	.2539	.0526	-.0379	-.0287	.1659	.1628
1.570	3.56	0.10	0.84	15.05	.2389	.0504	-.0354	.0154	.1822	.1382
1.570	3.58	0.11	4.20	15.04	.2369	.0506	-.0339	.0160	.1722	.0349
1.570	3.59	0.10	7.55	15.05	.2371	.0508	-.0335	-.0341	.1556	.1513
1.570	3.59	-5.07	7.55	15.08	.2375	.0508	-.0337	-.1914	.1923	-.6139
1.570	3.57	-5.05	4.19	15.06	.2362	.0504	-.0339	-.1454	.2066	-.7419
1.570	3.56	-5.01	0.83	15.04	.2386	.0505	-.0352	-.1231	.2115	-.7349
1.570	3.60	-5.01	0.83	10.04	.2586	.0529	-.0399	-.1749	.1899	-.6832
1.570	3.50	-5.06	4.19	10.05	.2471	.0501	-.0411	-.2363	.1826	-.6410
1.570	3.58	-5.12	7.55	10.07	.2379	.0504	-.0341	-.2545	.2095	-.8549
1.570	3.50	-5.20	7.55	5.09	.2643	.0519	-.0463	-.3097	.2854	-1.5352
1.570	3.73	-5.16	4.19	5.10	.2674	.0546	-.0367	-.3475	.2090	-.9982
1.570	3.83	-5.11	2.51	5.07	.2650	.0552	-.0313	-.3253	.2134	-.9912
1.570	3.85	-5.12	0.84	5.07	.2560	.0548	-.0276	-.3331	.2054	-.7054
1.570	3.83	-5.12	0.00	5.08	.2479	.0541	-.0256	-.3309	.1768	-.5775
1.570	3.82	-5.09	-0.01	3.39	.2370	.0529	-.0225	-.3757	.2237	-.6935
1.570	3.93	-5.21	1.68	3.44	.2573	.0558	-.0242	-.4228	.2355	-.9130
1.570	3.90	-5.25	4.19	3.47	.2769	.0572	-.0323	-.4418	.2377	-1.3855
1.570	3.64	-5.27	7.55	3.45	.2764	.0548	-.0440	-.3141	.3354	-1.8688
1.570	3.48	-8.33	7.55	5.13	.2660	.0516	-.0482	-.5301	.3388	-1.7547
1.570	3.73	-8.22	4.19	5.12	.2714	.0546	-.0382	-.5707	.2765	-1.1137
1.570	3.84	-8.23	2.51	5.13	.2692	.0555	-.0324	-.5475	.2853	-1.0680
1.570	3.89	-8.21	0.83	5.13	.2614	.0556	-.0274	-.5164	.2774	-.9348
1.570	3.89	-8.21	0.00	5.13	.2546	.0551	-.0251	-.5108	.2428	-.8601
1.570	3.58	-10.25	0.83	10.15	.2641	.0529	-.0429	-.4705	.2867	-1.2401
1.570	3.48	-10.30	4.20	10.15	.2484	.0499	-.0422	-.5195	.2932	-1.2270
1.570	3.57	-10.36	7.55	10.17	.2368	.0501	-.0340	-.5916	.3248	-1.2839
1.570	3.58	-10.24	7.55	15.13	.2361	.0506	-.0334	-.4867	.2917	-1.1711
1.570	3.57	-10.24	4.19	15.13	.2362	.0505	-.0337	-.4451	.3040	-1.2461
1.570	3.56	-10.19	0.83	15.09	.2365	.0503	-.0346	-.4050	.3071	-1.3341
1.570	3.88	1.39	2.51	1.23	.2437	.0540	-.0218	-.1972	.2144	-1.0592
1.570	3.80	1.42	1.67	1.22	.2350	.0523	-.0229	-.1929	.1923	-.7624
1.570	3.71	1.49	0.85	1.18	.2272	.0511	-.0243	-.1947	.1765	-.4263
1.570	3.64	1.53	0.00	1.16	.2223	.0501	-.0262	-.1968	.1658	-.0513
1.570	3.58	3.54	0.00	0.49	.2163	.0492	-.0267	-.1154	.1535	.0162
1.570	3.72	3.50	1.68	0.50	.2274	.0508	-.0241	-.1254	.1893	-.5111
1.570	3.85	3.45	2.52	1.21	.2406	.0534	-.0225	-.1408	.1939	-.7268
1.570	3.77	3.47	1.67	1.20	.2326	.0519	-.0236	-.1416	.1749	-.3904
1.570	3.68	3.50	0.83	1.19	.2240	.0507	-.0246	-.1425	.1577	-.0670
1.570	3.61	3.57	-0.01	1.16	.2191	.0498	-.0262	-.1497	.1468	.2967
1.570	3.79	6.54	2.51	1.19	.2368	.0526	-.0239	-.0848	.1829	-.1361
1.570	3.71	6.60	1.68	1.16	.2294	.0512	-.0250	-.0798	.1666	.2377
1.570	3.64	6.61	0.83	1.17	.2219	.0502	-.0257	-.0631	.1526	.4792
1.570	3.59	6.64	0.00	1.16	.2177	.0496	-.0268	-.0750	.1412	.8316
1.570	5.27	12.40	0.88	2.04	.2995	.0644	-.0441	.1797	.1803	1.4585
1.570	5.32	12.35	1.72	2.05	.3051	.0658	-.0433	.1270	.1729	1.1761
1.570	5.39	12.30	2.55	2.05	.3109	.0673	-.0423	.0409	.1591	1.0704
1.570	5.50	12.20	4.24	2.09	.3232	.0700	-.0409	-.0049	.2368	.3808
1.570	5.40	12.20	7.58	3.39	.3356	.0699	-.0499	.1493	.3857	.2160
1.570	5.44	12.24	4.23	3.37	.3272	.0696	-.0452	.0228	.1684	.9971
1.570	5.32	12.37	1.72	3.32	.3100	.0664	-.0449	.2227	.1905	1.4603
1.570	5.38	12.46	2.55	4.99	.3204	.0682	-.0458	.3579	.2332	1.6678
1.570	5.37	12.34	4.24	5.03	.3266	.0685	-.0480	.1814	.1766	1.3686

TABLE III.- AERODYNAMIC CHARACTERISTICS OF RETURN COMPONENT AND BOMB POD LESS FINS WITH MUTUAL INTERFERENCE; $\beta_P = 0^o$; $\beta_R = 0^o$ - Continued

M	α_R, deg	α_P, deg	x_a, in.	z_a, in.	$C_{L,R}$	$C'_{D,R}$	$C_{m,R}$	$C_{L,P}$	$C'_{D,P}$	$C_{m,P}$
1.570	5.27	12.28	7.58	5.05	.3331	.0683	-.0549	.0894	.2508	.9365
1.570	5.24	10.36	0.02	2.01	.2940	.0639	-.0435	.0442	.1403	1.6901
1.570	5.28	10.35	0.87	2.00	.2987	.0647	-.0429	.0367	.1365	1.2020
1.570	5.35	10.27	1.70	2.04	.3054	.0660	-.0422	.0056	.1324	.9521
1.570	5.42	10.22	2.55	2.06	.3131	.0678	-.0415	-.0490	.1348	.7207
1.570	5.53	10.16	4.22	2.09	.3265	.0706	-.0406	-.0696	.2112	.0640
1.570	5.40	10.20	7.58	3.35	.3373	.0702	-.0505	.1034	.3719	-.1311
1.570	5.46	10.18	4.22	3.36	.3304	.0701	-.0453	-.0611	.1422	.6849
1.570	5.34	10.31	1.71	3.31	.3116	.0668	-.0444	.0786	.1531	1.1900
1.570	5.25	10.43	0.02	3.27	.3010	.0647	-.0451	.1324	.1692	1.8978
1.570	5.31	10.40	0.02	4.98	.3090	.0661	-.0453	.1763	.1727	1.9639
1.570	5.34	10.40	0.86	4.98	.3139	.0671	-.0454	.1493	.1697	1.8937
1.570	5.39	10.38	2.55	4.98	.3225	.0687	-.0460	.1555	.1811	1.4529
1.570	5.38	10.25	4.22	5.03	.3297	.0689	-.0486	.0206	.1348	1.2195
1.570	5.27	10.22	7.58	5.02	.3343	.0684	-.0556	.0343	.2360	.5651
1.570	5.30	5.11	0.01	2.09	.2983	.0648	-.0421	-.1457	.1321	.7862
1.570	5.36	5.07	0.85	2.10	.3031	.0659	-.0407	-.1532	.1206	.4009
1.570	5.43	5.06	1.68	2.09	.3099	.0673	-.0400	-.1797	.1283	.1107
1.570	5.49	5.00	2.52	2.12	.3178	.0689	-.0395	-.1733	.1432	-.2530
1.570	5.60	4.94	4.19	2.15	.3341	.0721	-.0398	-.1634	.2010	-.8898
1.570	5.39	5.00	7.54	3.39	.3430	.0707	-.0525	.0185	.3334	-.9932
1.570	5.50	5.02	4.19	3.39	.3351	.0710	-.0452	-.1722	.1266	-.1884
1.570	5.42	5.12	1.68	3.34	.3185	.0683	-.0433	-.1154	.1268	.4166
1.570	5.32	5.16	0.01	3.33	.3045	.0656	-.0433	-.1299	.1237	1.0406
1.570	5.36	5.23	0.02	4.99	.3136	.0673	-.0445	-.1014	.0959	1.2919
1.570	5.39	5.20	0.85	5.01	.3193	.0682	-.0450	-.1129	.1140	1.0881
1.570	5.41	5.18	2.52	5.00	.3272	.0692	-.0464	-.0780	.1310	.5486
1.570	5.39	5.13	4.20	5.03	.3326	.0693	-.0494	-.1250	.1148	.3677
1.570	5.24	5.05	7.54	5.05	.3364	.0683	-.0574	-.0683	.2088	-.3207
1.570	5.22	5.18	7.55	10.03	.3144	.0653	-.0510	-.0246	.1351	.7911
1.570	5.18	5.24	4.20	10.03	.3250	.0663	-.0565	-.0211	.1249	1.2672
1.570	5.31	5.30	0.85	10.01	.3258	.0679	-.0509	.0960	.1779	1.1057
1.570	5.24	0.10	7.55	15.05	.3134	.0657	-.0498	-.0789	.1424	.3307
1.570	5.24	0.11	4.20	15.04	.3135	.0656	-.0502	.0049	.1721	.0376
1.570	5.21	0.12	0.84	15.04	.3180	.0657	-.0529	.0043	.1806	.1278
1.570	5.30	0.12	0.84	10.03	.3301	.0683	-.0526	-.0509	.1503	.2200
1.570	5.17	0.13	4.20	10.01	.3265	.0662	-.0577	-.1278	.1345	.2407
1.570	5.23	0.08	7.55	10.01	.3143	.0656	-.0507	-.1475	.1464	-.1278
1.570	5.22	-0.08	7.55	5.06	.3399	.0685	-.0598	-.1688	.2374	-1.1272
1.570	5.40	-0.05	4.20	5.07	.3364	.0696	-.0503	-.2221	.1370	-.4687
1.570	5.45	-0.03	2.54	5.07	.3334	.0702	-.0469	-.2008	.1479	-.3584
1.570	5.43	0.01	0.84	5.05	.3241	.0690	-.0445	-.2143	.1454	.0447
1.570	5.41	0.03	0.01	5.04	.3175	.0681	-.0433	-.2212	.1126	.2785
1.570	5.40	-0.01	0.01	3.36	.3062	.0666	-.0403	-.2470	.1533	.0148
1.570	5.51	-0.06	1.70	3.39	.3240	.0698	-.0411	-.2554	.1549	-.4083
1.570	5.55	-0.14	4.20	3.42	.3406	.0723	-.0447	-.2901	.1721	-1.0179
1.570	5.38	-0.16	7.55	3.43	.3477	.0712	-.0546	-.1268	.3261	-1.6539
1.570	5.67	-0.21	4.20	2.17	.3386	.0732	-.0382	-.3026	.2290	-1.6334
1.570	5.59	-0.15	2.54	2.15	.3245	.0704	-.0374	-.3229	.1874	-1.0351
1.570	5.53	-0.12	1.70	2.14	.3175	.0690	-.0379	-.3136	.1767	-.7666
1.570	5.44	-0.07	0.84	2.12	.3092	.0671	-.0392	-.2995	.1648	-.3838
1.570	5.35	-0.04	0.01	2.10	.3020	.0656	-.0408	-.2903	.1617	-.0896
1.570	5.36	-5.30	7.55	3.45	.3538	.0719	-.0578	-.4532	.3765	-1.8681
1.570	5.60	-5.29	4.20	3.48	.3503	.0737	-.0454	-.5283	.2448	-1.5031
1.570	5.60	-5.19	1.68	3.41	.3292	.0713	-.0386	-.5159	.2443	-.8359
1.570	5.49	-5.11	-0.01	5.07	.3243	.0696	-.0421	-.3814	.1693	-.5124
1.570	5.51	-5.15	0.83	5.09	.3336	.0709	-.0442	-.3942	.2012	-.6502
1.570	5.49	-5.19	2.51	5.11	.3415	.0716	-.0476	-.4084	.2080	-.9303
1.570	5.41	-5.20	4.19	5.11	.3439	.0706	-.0522	-.4355	.2091	-.9745
1.570	5.17	-5.28	7.55	5.11	.3440	.0681	-.0631	-.3959	.2966	-1.6404
1.570	5.23	-5.14	7.55	10.07	.3140	.0652	-.0504	-.3112	.1914	-.8533
1.570	5.15	-5.07	4.19	10.06	.3274	.0659	-.0588	-.2531	.1793	-.6495
1.570	5.29	-5.03	0.83	10.05	.3343	.0687	-.0544	-.1937	.1671	-.6399
1.570	5.21	-5.01	0.83	15.04	.3176	.0654	-.0528	-.1339	.2141	-.7321
1.570	5.24	-5.06	4.19	15.08	.3143	.0655	-.0503	-.1513	.2037	-.7148
1.570	5.25	-5.07	7.55	15.08	.3138	.0658	-.0498	-.2206	.1795	-.5552
1.570	5.14	-8.38	7.55	5.14	.3466	.0683	-.0654	-.6418	.3655	-1.8388
1.570	5.41	-8.31	4.19	5.16	.3473	.0709	-.0534	-.6861	.2866	-1.0178
1.570	5.50	-8.21	2.51	5.12	.3435	.0715	-.0477	-.6689	.3000	-.7768
1.570	5.55	-8.23	0.83	5.13	.3352	.0714	-.0428	-.6102	.2865	-.7413
1.570	5.54	-8.47	0.02	5.34	.3284	.0704	-.0409	-.5771	.2456	-.7255
1.570	5.27	-10.25	0.83	10.15	.3397	.0691	-.0574	-.5067	.2747	-1.1016
1.570	5.12	-10.28	4.19	10.14	.3267	.0653	-.0600	-.5571	.3009	-1.2034
1.570	5.23	-10.38	7.55	10.17	.3138	.0652	-.0504	-.6584	.3264	-1.2138
1.570	5.24	-10.25	7.54	15.13	.3139	.0659	-.0498	-.5093	.2889	-1.1646
1.570	5.23	-10.22	4.19	15.11	.3133	.0654	-.0501	-.4508	.3018	-1.2309
1.570	5.21	-10.25	0.83	15.13	.3161	.0654	-.0524	-.4149	.3123	-1.3304
1.570	5.51	3.40	2.51	1.21	.3145	.0684	-.0376	-.2210	.1839	-.8968
1.570	5.43	3.42	1.67	1.21	.3065	.0667	-.0389	-.2108	.1648	-.5770
1.570	5.35	3.48	0.84	1.19	.3008	.0654	-.0406	-.2175	.1441	-.1755

TABLE III.- AERODYNAMIC CHARACTERISTICS OF RETURN COMPONENT AND BOMB POD LESS FINS WITH MUTUAL INTERFERENCE; $\beta_P = 0^o$; $\beta_R = 0^o$ - Continued

M	α_R, deg	α_P, deg	x_a, in.	z_a, in.	$C_{L,R}$	$C'_{D,R}$	$C_{m,R}$	$C_{L,P}$	$C'_{D,P}$	$C_{m,P}$
1.570	5.28	3.53	-0.01	1.16	.2949	.0642	-.0422	-.2195	.1318	.2633
1.570	5.22	5.54	0.00	0.50	.2904	.0632	-.0431	-.1433	.1243	.2687
1.570	5.35	5.52	1.68	0.49	.2982	.0648	-.0398	-.1602	.1636	-.3085
1.570	5.48	5.46	2.51	1.21	.3123	.0680	-.0385	-.1756	.1693	-.5499
1.570	5.40	5.52	1.68	1.17	.3048	.0663	-.0397	-.1653	.1531	-.2037
1.570	5.32	5.55	0.84	1.17	.2989	.0650	-.0411	-.1661	.1365	.1970
1.570	5.27	5.57	0.00	1.17	.2952	.0642	-.0426	-.1725	.1206	.6121
1.570	5.43	8.55	2.55	1.19	.3089	.0671	-.0398	-.1201	.1634	.0282
1.570	5.36	8.58	1.69	1.18	.3030	.0658	-.0410	-.1080	.1414	.4257
1.570	5.29	8.67	0.85	1.14	.2965	.0646	-.0421	-.0753	.1303	.7527
1.570	5.24	8.72	0.01	1.13	.2934	.0639	-.0432	-.0700	.1152	1.1384
1.770	-0.27	12.76	0.89	2.04	.0449	.0322	.0067	.6202	.3211	1.4821
1.770	-0.18	12.69	2.56	2.04	.0582	.0328	.0064	.5111	.3102	1.2241
1.770	-0.17	12.61	4.25	2.08	.0692	.0327	.0035	.4336	.3256	.7368
1.770	-0.29	12.65	7.60	3.33	.0675	.0317	-.0021	.5252	.3917	.8322
1.770	-0.22	12.65	4.24	3.34	.0657	.0321	.0021	.5982	.3291	.9810
1.770	-0.20	12.73	1.73	3.32	.0580	.0326	.0059	.6341	.3105	1.6164
1.770	-0.21	12.75	1.73	2.03	.0542	.0326	.0066	.5462	.3020	1.4736
1.770	-0.21	12.79	2.56	4.98	.0663	.0321	.0022	.7907	.3801	1.4864
1.770	-0.27	12.73	4.25	5.01	.0666	.0318	-.0004	.6759	.3389	1.3967
1.770	-0.33	12.65	7.59	5.03	.0627	.0312	-.0026	.6118	.3741	.8916
1.770	-0.29	10.66	0.03	2.02	.0412	.0318	.0067	.3977	.2425	1.4897
1.770	-0.24	10.66	0.87	2.02	.0482	.0323	.0067	.3299	.2249	1.4813
1.770	-0.19	10.62	1.71	2.05	.0562	.0327	.0067	.3008	.2281	1.3248
1.770	-0.16	10.59	2.55	2.06	.0620	.0329	.0063	.3002	.2406	1.0503
1.770	-0.16	10.54	4.23	2.08	.0716	.0327	.0031	.2461	.2589	.6529
1.770	-0.31	10.60	7.59	3.32	.0665	.0316	-.0024	.3222	.3181	.9039
1.770	-0.22	10.59	4.23	3.33	.0681	.0321	.0014	.3458	.2532	.9691
1.770	-0.19	10.67	1.71	3.30	.0597	.0327	.0058	.3751	.2342	1.5647
1.770	-0.24	10.63	0.02	3.32	.0489	.0322	.0065	.5127	.2986	1.3198
1.770	-0.19	10.64	0.02	4.99	.0565	.0325	.0065	.5480	.3063	1.0768
1.770	-0.19	10.62	0.86	5.01	.0614	.0325	.0052	.5359	.3049	1.1481
1.770	-0.23	10.66	2.55	5.01	.0643	.0321	.0021	.4722	.2843	1.5209
1.770	-0.28	10.61	4.22	5.01	.0649	.0318	-.0007	.3842	.2510	1.4636
1.770	-0.35	10.57	7.58	4.99	.0611	.0311	-.0028	.3510	.2878	.9369
1.770	-0.23	5.44	0.01	2.09	.0466	.0323	.0079	.0458	.1630	1.0776
1.770	-0.17	5.38	0.85	2.11	.0551	.0327	.0078	.0238	.1597	.8425
1.770	-0.13	5.33	1.68	2.14	.0636	.0333	.0072	.0250	.1727	.5217
1.770	-0.11	5.34	2.52	2.13	.0705	.0334	.0059	.0487	.1881	.2157
1.770	-0.14	5.18	4.18	2.21	.0782	.0328	.0019	.0671	.2059	-.0623
1.770	-0.32	5.39	7.55	3.36	.0692	.0317	-.0039	.1190	.2461	.2368
1.770	-0.21	5.37	4.19	3.37	.0738	.0323	-.0003	.0830	.1910	.3025
1.770	-0.15	5.45	1.69	3.35	.0673	.0329	.0053	.0405	.1578	1.0659
1.770	-0.19	5.44	0.02	3.35	.0551	.0327	.0071	.0921	.1688	1.0657
1.770	-0.17	5.45	0.85	5.03	.0667	.0326	.0041	.1095	.1729	1.0062
1.770	-0.17	5.48	0.01	5.01	.0622	.0327	.0059	.1324	.1797	.9592
1.770	-0.23	5.49	2.52	5.01	.0681	.0321	.0007	.0791	.1755	1.1646
1.770	-0.29	5.46	4.20	5.01	.0677	.0317	-.0022	.0743	.1824	.8926
1.770	-0.36	5.41	7.55	5.02	.0611	.0310	-.0035	.1109	.2001	.3631
1.770	-0.32	5.47	7.55	10.02	.0520	.0312	.0017	.1503	.1822	.8726
1.770	-0.32	5.47	4.20	10.02	.0530	.0313	.0012	.1608	.1883	.9928
1.770	-0.35	5.50	0.85	10.01	.0590	.0311	-.0024	.2124	.2067	.8283
1.770	-0.32	0.32	7.55	15.06	.0509	.0316	.0021	.0398	.1679	.0171
1.770	-0.31	0.32	4.21	15.06	.0526	.0314	.0018	.0394	.1695	.0855
1.770	-0.32	0.32	0.84	15.05	.0520	.0314	.0018	.0513	.1749	.0139
1.770	-0.37	0.34	0.84	10.03	.0587	.0310	-.0030	.0338	.1731	.0186
1.770	-0.32	0.33	4.20	10.03	.0527	.0313	.0014	.0045	.1662	.0674
1.770	-0.32	0.35	7.55	10.02	.0513	.0312	.0019	-.0304	.1569	.0631
1.770	-0.38	0.25	7.55	5.03	.0612	.0310	-.0042	-.0154	.1935	-.5016
1.770	-0.30	0.28	4.20	5.04	.0723	.0318	-.0041	-.0348	.1879	-.1819
1.770	-0.24	0.28	2.54	5.06	.0726	.0324	-.0010	-.0833	.1602	.1729
1.770	-0.16	0.30	0.84	5.05	.0716	.0328	.0031	-.0719	.1462	.2109
1.770	-0.13	0.29	0.01	5.06	.0697	.0330	.0051	-.0481	.1476	.1499
1.770	-0.12	0.27	0.01	3.38	.0618	.0333	.0082	-.1067	.1688	.1929
1.770	-0.11	0.25	1.70	3.40	.0745	.0334	.0049	-.0997	.1740	-.0141
1.770	-0.21	0.19	4.20	3.41	.0777	.0324	-.0015	-.0554	.1872	-.6002
1.770	-0.34	0.20	7.55	3.40	.0715	.0315	-.0058	-.0027	.2437	-.6965
1.770	-0.12	0.17	4.20	2.16	.0839	.0329	.0010	-.0769	.2088	-.8954
1.770	-0.05	0.20	2.54	2.15	.0800	.0336	.0056	-.1077	.1994	-.6548
1.770	-0.06	0.20	1.70	2.15	.0718	.0337	.0079	-.1148	.1897	-.4340
1.770	-0.11	0.23	0.84	2.13	.0607	.0335	.0095	-.1164	.1714	-.1464
1.770	-0.16	0.26	0.01	2.12	.0512	.0329	.0097	-.1118	.1621	.0712
1.770	-0.07	-4.89	-0.01	2.16	.0576	.0336	.0122	-.3238	.2313	-.7143
1.770	0.00	-4.96	0.83	2.20	.0698	.0343	.0118	-.3397	.2408	-.8328
1.770	0.02	-4.97	1.67	2.21	.0807	.0345	.0094	-.3555	.2537	-.9377
1.770	0.01	-4.99	2.51	2.21	.0888	.0344	.0060	-.3663	.2528	-1.0855
1.770	-0.10	-4.99	4.19	2.20	.0904	.0332	-.0002	-.3287	.2619	-1.3690
1.770	-0.37	-4.93	7.55	3.41	.0730	.0313	-.0078	-.1932	.2709	-1.4599
1.770	-0.21	-4.92	4.19	3.45	.0864	.0326	-.0043	-.2511	.2252	-1.2130
1.770	-0.06	-4.90	1.66	3.43	.0839	.0336	.0039	-.2886	.2260	-.8334

TABLE III.- AERODYNAMIC CHARACTERISTICS OF RETURN COMPONENT AND BOMB POD LESS FINS WITH MUTUAL INTERFERENCE; $\beta_P = 0^o$; $\beta_R = 0^o$ - Continued

M	α_R, deg	α_P, deg	x_a, in.	z_a, in.	$C_{L,R}$	$C_{D',R}$	$C_{m,R}$	$C_{L,P}$	$C_{D',P}$	$C_{m,P}$
1.770	-0.04	-4.82	-0.01	3.40	.0700	.0339	.0095	-.2980	.2008	-.5853
1.770	-0.10	-4.85	-0.01	5.09	.0776	.0334	.0042	-.2359	.1760	-.5751
1.770	-0.13	-4.86	0.84	5.09	.0809	.0330	.0014	-.2583	.1897	-.5278
1.770	-0.23	-4.89	2.51	5.10	.0820	.0324	-.0037	-.2431	.2198	-.6817
1.770	-0.32	-4.90	4.19	5.09	.0780	.0317	-.0067	-.1936	.2260	-1.0641
1.770	-0.39	-4.91	7.55	5.06	.0617	.0305	-.0050	-.2156	.2349	-1.1541
1.770	-0.31	-4.86	7.55	10.07	.0551	.0312	.0014	-.1923	.1957	-.7504
1.770	-0.32	-4.84	4.19	10.06	.0534	.0312	.0012	-.1567	.1978	-.8009
1.770	-0.37	-4.82	0.83	10.05	.0633	.0308	-.0045	-.1331	.2000	-.8209
1.770	-0.31	-4.80	0.83	15.06	.0534	.0313	.0017	-.1149	.2076	-.8257
1.770	-0.31	-4.84	4.17	15.09	.0544	.0315	.0016	-.1326	.2092	-.7798
1.770	-0.31	-4.83	7.55	15.08	.0537	.0315	.0016	-.1274	.1988	-.8090
1.770	-0.21	-8.06	4.19	3.47	.0915	.0325	-.0060	-.4951	.3178	-1.3173
1.770	-0.38	-8.04	7.55	3.46	.0781	.0310	-.0100	-.4183	.3443	-1.7601
1.770	-0.39	-8.06	7.55	5.13	.0637	.0304	-.0058	-.4508	.2959	-1.3564
1.770	-0.24	-7.93	2.51	5.11	.0864	.0324	-.0055	-.4264	.2742	-1.0491
1.770	-0.13	-7.97	0.83	5.15	.0862	.0329	-.0001	-.4428	.2479	-.8406
1.770	-0.07	-7.98	0.00	5.16	.0852	.0334	.0029	-.4257	.2426	-.8449
1.770	-0.38	-10.04	0.83	10.15	.0632	.0305	-.0053	-.4845	.3152	-1.2595
1.770	-0.32	-10.08	4.19	10.16	.0541	.0312	.0010	-.5027	.3122	-1.2951
1.770	-0.30	-10.11	7.55	10.17	.0548	.0313	.0015	-.5418	.3174	-1.3103
1.770	-0.31	-10.03	7.55	15.14	.0539	.0315	.0016	-.4797	.3087	-1.2748
1.770	-0.31	-10.04	4.19	15.15	.0536	.0315	.0017	-.4607	.3138	-1.3620
1.770	-0.31	-10.03	0.83	15.13	.0532	.0312	.0017	-.4494	.3107	-1.3927
1.770	0.05	-2.41	2.53	1.26	.0812	.0345	.0103	-.2459	.2452	-1.1332
1.770	0.00	-2.39	1.67	1.24	.0697	.0340	.0117	-.2242	.2384	-.9615
1.770	-0.09	-2.39	0.84	1.24	.0539	.0330	.0124	-.1908	.2187	-.8205
1.770	-0.16	-2.31	0.00	1.20	.0477	.0325	.0108	-.1759	.1941	-.6063
1.770	-0.24	-0.29	0.00	0.51	.0418	.0317	.0092	-.0892	.1921	-.5217
1.770	-0.07	-0.35	1.68	0.56	.0589	.0332	.0117	-.0983	.2245	-.9015
1.770	0.01	-0.31	2.53	1.21	.0758	.0343	.0101	-.1448	.2082	-.9303
1.770	-0.04	-0.29	1.69	1.19	.0657	.0339	.0110	-.1344	.2065	-.7555
1.770	-0.11	-0.29	0.84	1.19	.0547	.0330	.0110	-.1240	.1926	-.5398
1.770	-0.18	-0.26	0.01	1.18	.0474	.0325	.0099	-.1141	.1708	-.2693
1.770	-0.05	2.77	2.53	1.22	.0723	.0337	.0085	-.0190	.1942	-.4747
1.770	-0.10	2.71	1.68	1.24	.0622	.0333	.0094	-.0257	.1945	-.2816
1.770	-0.16	2.76	0.86	1.21	.0528	.0327	.0092	-.0383	.1741	.0088
1.770	-0.23	2.80	0.01	1.18	.0448	.0320	.0087	-.0389	.1508	.3098
1.770	1.80	12.73	0.89	2.05	.1358	.0383	-.0131	.4826	.2619	1.7117
1.770	1.85	12.71	1.73	2.04	.1429	.0391	-.0131	.4129	.2590	1.5251
1.770	1.89	12.61	2.56	2.07	.1510	.0397	-.0136	.3742	.2580	1.1526
1.770	1.92	12.53	4.24	2.09	.1625	.0402	-.0160	.2397	.2586	.7496
1.770	1.78	12.55	7.59	3.36	.1615	.0390	-.0224	.3037	.3411	.9191
1.770	1.87	12.60	4.24	3.35	.1595	.0394	-.0176	.4477	.2801	1.0358
1.770	1.87	12.72	1.72	3.32	.1480	.0395	-.0136	.5625	.2778	1.7720
1.770	1.85	12.78	2.56	4.98	.1539	.0390	-.0163	.7088	.3426	1.7013
1.770	1.80	12.70	4.24	5.01	.1555	.0387	-.0195	.5819	.3032	1.5188
1.770	1.73	12.59	7.59	5.04	.1553	.0380	-.0231	.3946	.3022	1.1168
1.770	1.72	10.52	7.58	5.01	.1549	.0379	-.0234	.1950	.2340	1.0625
1.770	1.80	10.82	4.25	4.89	.1570	.0389	-.0200	.3160	.2289	1.5102
1.770	1.85	10.68	2.55	4.98	.1557	.0392	-.0170	.3899	.2438	1.7228
1.770	1.89	10.65	0.87	4.98	.1521	.0395	-.0141	.4878	.2738	1.2580
1.770	1.88	10.65	0.02	4.98	.1477	.0393	-.0131	.5152	.2896	1.1407
1.770	1.82	10.69	0.03	3.28	.1400	.0386	-.0136	.4458	.2694	1.4612
1.770	1.89	10.61	1.70	3.33	.1521	.0397	-.0141	.2907	.2067	1.6965
1.770	1.87	10.54	4.22	3.34	.1612	.0396	-.0181	.2156	.2204	.9763
1.770	1.78	10.52	7.58	3.34	.1623	.0390	-.0229	.1800	.2936	.7222
1.770	1.93	10.46	4.22	2.11	.1653	.0403	-.0164	.1117	.2220	.5521
1.770	1.91	10.54	2.55	2.07	.1550	.0400	-.0139	.2004	.2088	.9129
1.770	1.87	10.56	1.71	2.07	.1453	.0393	-.0129	.2066	.1954	1.2818
1.770	1.82	10.64	0.87	2.02	.1389	.0385	-.0131	.2185	.1810	1.6623
1.770	1.78	10.67	0.03	2.01	.1334	.0380	-.0133	.3079	.2066	1.7745
1.770	1.83	5.41	0.01	2.09	.1382	.0386	-.0121	-.0402	.1412	1.1710
1.770	1.89	5.38	0.85	2.10	.1462	.0395	-.0121	-.0619	.1439	.8481
1.770	1.93	5.31	1.68	2.13	.1541	.0403	-.0125	-.0606	.1566	.4644
1.770	1.96	5.29	2.52	2.14	.1619	.0407	-.0136	-.0477	.1657	.1189
1.770	1.96	5.26	4.19	2.15	.1726	.0410	-.0171	-.0583	.1758	-.1794
1.770	1.76	5.27	7.54	3.40	.1641	.0390	-.0244	.0454	.2539	-.1678
1.770	1.87	5.32	4.20	3.38	.1669	.0400	-.0197	-.0191	.1653	.2342
1.770	1.93	5.38	1.68	3.38	.1585	.0403	-.0142	-.0455	.1455	1.0205
1.770	1.87	5.41	0.01	3.35	.1457	.0393	-.0127	-.0340	.1324	1.2637
1.770	1.91	5.46	0.01	5.01	.1537	.0398	-.0134	.0707	.1466	1.0848
1.770	1.91	5.47	0.85	5.02	.1582	.0399	-.0150	.0235	.1382	1.2751
1.770	1.86	5.48	2.52	5.01	.1610	.0396	-.0185	-.0176	.1401	1.2723
1.770	1.79	5.43	4.20	5.02	.1613	.0390	-.0220	.0115	.1709	.8266
1.770	1.71	5.36	7.55	5.03	.1562	.0378	-.0245	-.0032	.1743	.3523
1.770	1.75	5.20	7.53	10.15	.1452	.0377	-.0185	.0703	.1614	1.0567
1.770	1.74	5.44	4.20	10.04	.1466	.0378	-.0195	.1315	.1843	1.0396
1.770	1.71	5.50	0.85	10.01	.1532	.0378	-.0232	.1945	.2054	.8583
1.770	1.76	0.31	7.55	15.06	.1448	.0379	-.0182	.0220	.1689	.0484

TABLE III.- AERODYNAMIC CHARACTERISTICS OF RETURN COMPONENT AND BOMB POD LESS FINS WITH MUTUAL INTERFERENCE; $\beta_P = 0^o$; $\beta_R = 0^o$ - Continued

M	α_R, deg	α_P, deg	x_a, in.	z_a, in.	$C_{L,R}$	$C_{D,R}$	$C_{m,R}$	$C_{L,P}$	$C_{D,P}$	$C_{m,P}$
1.770	1.76	0.32	4.20	15.06	.1440	.0379	-.0180	.0216	.1708	.1030
1.770	1.76	0.32	0.84	15.05	.1447	.0377	-.0184	.0335	.1736	.0314
1.770	1.70	0.33	0.84	10.03	.1546	.0378	-.0242	.0160	.1724	.0634
1.770	1.75	0.36	4.20	10.01	.1460	.0378	-.0191	-.0250	.1613	.1426
1.770	1.75	0.34	7.55	10.02	.1441	.0377	-.0184	-.0834	.1464	.1993
1.770	1.68	0.19	7.55	5.05	.1549	.0376	-.0253	-.1196	.1835	-.5419
1.770	1.78	0.21	4.20	5.08	.1645	.0389	-.0237	-.0981	.1727	-.2473
1.770	1.85	0.25	2.54	5.07	.1647	.0397	-.0201	-.1529	.1590	.1769
1.770	1.93	0.28	0.84	5.07	.1622	.0402	-.0155	-.1603	.1252	.4657
1.770	1.94	0.28	0.01	5.06	.1587	.0404	-.0136	-.1310	.1256	.4170
1.770	1.95	0.23	0.01	3.40	.1535	.0404	-.0113	-.1827	.1517	.3079
1.770	1.97	0.22	1.69	3.41	.1658	.0408	-.0145	-.1748	.1736	-.0630
1.770	1.87	0.15	4.20	3.42	.1715	.0402	-.0212	-.1479	.1767	-.6573
1.770	1.73	0.15	7.55	3.40	.1657	.0387	-.0263	-.0759	.2544	-1.0860
1.770	1.98	0.11	4.20	2.17	.1761	.0412	-.0174	-.2096	.2023	-1.0093
1.770	2.03	0.16	2.54	2.15	.1679	.0416	-.0124	-.2176	.1836	-.6933
1.770	2.01	0.14	1.69	2.17	.1604	.0411	-.0107	-.2134	.1845	-.4075
1.770	1.97	0.20	0.84	2.14	.1503	.0402	-.0095	-.2034	.1738	-.1372
1.770	1.91	0.23	0.01	2.12	.1417	.0393	-.0098	-.2049	.1515	.1226
1.770	1.70	-4.98	7.55	3.41	.1700	.0386	-.0292	-.3060	.2957	-1.6729
1.770	1.87	-4.95	4.19	3.45	.1772	.0404	-.0233	-.3783	.2386	-1.1089
1.770	2.02	-4.93	1.68	3.44	.1739	.0417	-.0148	-.4043	.2405	-.6784
1.770	2.03	-4.88	-0.01	3.44	.1586	.0412	-.0093	-.3745	.1952	-.4690
1.770	1.99	-4.85	-0.01	5.09	.1675	.0412	-.0143	-.3082	.1626	-.3098
1.770	1.95	-4.89	0.83	5.10	.1707	.0408	-.0170	-.3184	.1712	-.4023
1.770	1.85	-4.91	2.51	5.11	.1720	.0402	-.0224	-.3075	.2092	-.7049
1.770	1.75	-5.05	4.19	5.16	.1702	.0393	-.0267	-.2991	.2197	-.9663
1.770	1.66	-4.98	7.55	5.09	.1569	.0373	-.0268	-.3200	.2366	-1.1520
1.770	1.75	-4.86	7.55	10.07	.1443	.0375	-.0184	-.2274	.1920	-.7131
1.770	1.74	-4.86	4.19	10.07	.1443	.0377	-.0187	-.1806	.1938	-.6981
1.770	1.69	-4.82	0.83	10.05	.1556	.0376	-.0253	-.1389	.1986	-.8050
1.770	1.75	-4.81	0.83	15.06	.1440	.0376	-.0182	-.1202	.2108	-.8372
1.770	1.75	-4.86	4.19	15.09	.1436	.0379	-.0180	-.1380	.2120	-.7503
1.770	1.75	-4.83	7.55	15.07	.1436	.0378	-.0180	-.1389	.2012	-.7639
1.770	2.01	-7.98	0.00	5.16	.1717	.0415	-.0147	-.4872	.2349	-.6667
1.770	1.96	-7.99	0.83	5.15	.1740	.0410	-.0179	-.5025	.2478	-.7441
1.770	1.85	-7.98	2.51	5.14	.1784	.0405	-.0245	-.4901	.2837	-.9921
1.770	1.74	-8.06	4.19	5.17	.1745	.0394	-.0288	-.5123	.2879	-1.0955
1.770	1.65	-8.07	7.55	5.12	.1583	.0370	-.0278	-.5722	.3131	-1.3109
1.770	1.67	-8.11	7.55	3.48	.1727	.0384	-.0315	-.5961	.3758	-1.7403
1.770	1.83	-8.04	4.19	3.95	.1802	.0400	-.0265	-.6317	.3203	-.9945
1.770	1.76	-10.05	0.83	15.15	.1446	.0377	-.0182	-.4489	.3157	-1.3804
1.770	1.75	-10.04	4.19	15.14	.1436	.0379	-.0180	-.4605	.3181	-1.3498
1.770	1.76	-10.02	7.55	15.14	.1446	.0381	-.0182	-.4805	.3099	-1.2360
1.770	1.75	-10.14	7.55	10.18	.1437	.0376	-.0181	-.5783	.3219	-1.2779
1.770	1.74	-10.08	4.20	10.16	.1434	.0376	-.0186	-.5240	.2974	-1.2392
1.770	1.68	-10.02	0.83	10.63	.1543	.0372	-.0252	-.4747	.3064	-1.3472
1.770	2.08	-0.37	2.53	1.22	.1623	.0416	-.0077	-.2664	.2188	-1.0363
1.770	2.04	-0.36	1.69	1.22	.1550	.0408	-.0078	-.2627	.2062	-.7092
1.770	1.95	-0.33	0.84	1.20	.1440	.0394	-.0082	-.2351	.1914	-.4841
1.770	1.87	-0.29	0.01	1.18	.1359	.0385	-.0094	-.2018	.1668	-.2469
1.770	1.81	1.75	0.00	0.49	.1295	.0375	-.0106	-.1261	.1547	-.1864
1.770	1.97	1.70	1.67	0.52	.1453	.0394	-.0080	-.1358	.1935	-.7308
1.770	2.05	1.66	2.51	1.24	.1607	.0413	-.0090	-.1818	.1894	-.7457
1.770	2.00	1.67	1.67	1.24	.1517	.0403	-.0086	-.1775	.1776	-.4599
1.770	1.92	1.70	0.85	1.22	.1417	.0392	-.0090	-.1674	.1703	-.1754
1.770	1.85	1.74	0.00	1.19	.1342	.0383	-.0101	-.1510	.1471	.1212
1.770	1.81	4.86	0.00	1.17	.1326	.0379	-.0114	-.0872	.1272	.7320
1.770	1.87	4.82	0.84	1.18	.1386	.0388	-.0104	-.0868	.1489	.3623
1.770	1.94	4.79	1.67	1.20	.1486	.0399	-.0102	-.0858	.1622	.0199
1.770	1.99	4.78	2.52	1.20	.1559	.0407	-.0101	-.0969	.1726	-.2098
1.770	3.85	12.70	0.89	2.05	.2160	.0495	-.0314	.3608	.2162	1.8965
1.770	3.90	12.64	1.73	2.06	.2240	.0506	-.0315	.2922	.2127	1.5587
1.770	3.95	12.54	2.55	2.09	.2323	.0519	-.0319	.2423	.2098	1.1348
1.770	4.02	12.47	4.24	2.11	.2476	.0535	-.0335	.0802	.1994	.7531
1.770	3.87	12.44	7.58	3.39	.2480	.0519	-.0411	.1533	.3032	.6870
1.770	3.96	12.54	4.24	3.37	.2444	.0525	-.0356	.2627	.2251	1.1283
1.770	3.94	12.70	1.72	3.32	.2288	.0513	-.0314	.4898	.2550	1.8473
1.770	3.95	12.75	2.56	4.99	.2366	.0518	-.0336	.6162	.3050	1.7432
1.770	3.90	12.68	4.24	5.02	.2417	.0516	-.0374	.4867	.2750	1.6422
1.770	3.80	12.54	7.58	5.05	.2398	.0505	-.0418	.1883	.2352	1.2425
1.770	3.80	10.46	7.58	5.02	.2416	.0507	-.0425	.0561	.1869	1.0472
1.770	3.90	10.59	4.23	5.01	.2424	.0518	-.0379	.2443	.2069	1.5444
1.770	3.95	10.63	2.55	5.00	.2393	.0521	-.0343	.2834	.2090	1.8486
1.770	3.97	10.60	0.86	5.01	.2343	.0520	-.0318	.4043	.2395	1.5008
1.770	3.95	10.62	0.02	4.99	.2297	.0513	-.0311	.4427	.2614	1.3120
1.770	3.87	10.64	0.02	3.29	.2201	.0500	-.0317	.3111	.2237	1.7043
1.770	3.95	10.63	1.71	3.31	.2327	.0518	-.0319	.2214	.1942	1.7698
1.770	3.96	10.49	4.22	3.35	.2461	.0527	-.0362	.0827	.1716	.9729
1.770	3.86	10.43	7.58	3.36	.2480	.0520	-.0416	.0741	.2726	.3680

TABLE III.- AERODYNAMIC CHARACTERISTICS OF RETURN COMPONENT AND BOMB POD LESS FINS WITH MUTUAL INTERFERENCE; $\beta_P = 0^o$; $\beta_R = 0^o$ - Continued

M	α_R, deg	α_P, deg	x_a, in.	z_a, in.	$C_{L,R}$	$C_{D,R}$	$C_{m,R}$	$C_{L,P}$	$C_{D,P}$	$C_{m,P}$
1.770	4.04	10.40	4.22	2.12	.2499	.0537	-.0336	-.0274	.1765	.5087
1.770	3.98	10.47	2.55	2.09	.2367	.0523	-.0318	.0878	.1786	.9166
1.770	3.93	10.52	1.71	2.07	.2292	.0512	-.0317	.0879	.1630	1.3552
1.770	3.88	10.58	0.86	2.04	.2205	.0501	-.0316	.1170	.1518	1.7730
1.770	3.84	10.64	0.02	2.02	.2142	.0492	-.0315	.2117	.1770	1.9795
1.770	3.90	5.38	0.02	2.09	.2190	.0500	-.0302	-.1318	.1156	1.2239
1.770	3.95	5.33	0.84	2.12	.2267	.0512	-.0299	-.1427	.1281	.9254
1.770	4.01	5.26	1.68	2.15	.2349	.0524	-.0301	-.1463	.1358	.4744
1.770	4.05	5.25	2.51	2.14	.2433	.0537	-.0309	-.1503	.1385	.1059
1.770	4.08	5.19	4.19	2.16	.2565	.0549	-.0337	-.1781	.1564	-.3664
1.770	3.85	5.25	7.55	3.39	.2523	.0522	-.0437	-.0449	.2411	-.5133
1.770	3.97	5.27	4.20	3.39	.2520	.0532	-.0375	-.1213	.1403	.1254
1.770	3.99	5.38	1.68	3.36	.2392	.0526	-.0321	-.1199	.1305	.9741
1.770	3.94	5.39	0.01	3.36	.2275	.0511	-.0308	-.1263	.1074	1.4280
1.770	3.99	5.46	0.02	5.01	.2367	.0524	-.0315	-.0342	.1202	1.4581
1.770	3.99	5.44	0.85	5.03	.2392	.0525	-.0322	-.0631	.1140	1.5068
1.770	3.96	5.48	2.53	4.99	.2459	.0528	-.0360	-.0986	.1280	1.3107
1.770	3.89	5.39	4.20	5.03	.2457	.0517	-.0396	-.0562	.1521	.7377
1.770	3.78	5.31	7.55	5.04	.2425	.0504	-.0438	-.1003	.1600	.2014
1.770	3.83	5.43	7.55	10.04	.2284	.0497	-.0368	.0118	.1463	1.1989
1.770	3.80	5.46	4.20	10.02	.2310	.0498	-.0389	.1085	.1811	1.0903
1.770	3.79	5.50	0.85	10.01	.2397	.0505	-.0421	.1774	.2060	.9071
1.770	3.84	0.31	7.55	15.06	.2292	.0501	-.0365	.0044	.1685	.0807
1.770	3.83	0.31	4.20	15.06	.2281	.0500	-.0364	.0103	.1696	.0791
1.770	3.83	0.29	0.84	15.07	.2287	.0499	-.0368	.0163	.1761	.0363
1.770	3.78	0.31	0.84	10.05	.2412	.0505	-.0434	-.0015	.1691	.0958
1.770	3.81	0.32	4.20	10.03	.2303	.0497	-.0385	-.0604	.1481	.2346
1.770	3.82	0.32	7.55	10.02	.2278	.0497	-.0368	-.1360	.1375	.2274
1.770	3.77	0.16	7.55	5.06	.2450	.0506	-.0454	-.2062	.1717	-.6699
1.770	3.89	0.20	4.20	5.08	.2521	.0524	-.0417	-.1856	.1576	-.2242
1.770	3.96	0.23	2.54	5.07	.2488	.0530	-.0372	-.2109	.1538	.1516
1.770	4.02	0.27	0.84	5.07	.2454	.0533	-.0327	-.2309	.1058	.6077
1.770	4.03	0.28	0.01	5.06	.2403	.0530	-.0310	-.2020	.1105	.6275
1.770	4.02	0.21	0.01	3.40	.2330	.0524	-.0289	-.2646	.1329	.3981
1.770	4.04	0.16	1.70	3.42	.2466	.0537	-.0322	-.2619	.1651	-.0670
1.770	3.98	0.11	4.20	3.44	.2579	.0537	-.0391	-.2582	.1715	-.6416
1.770	3.82	0.07	7.55	3.43	.2557	.0522	-.0461	-.1729	.2554	-1.3330
1.770	4.13	0.04	4.20	2.19	.2627	.0559	-.0335	-.3303	.2082	-1.1817
1.770	4.13	0.10	2.54	2.17	.2493	.0547	-.0287	-.3221	.1828	-.6235
1.770	4.11	0.14	1.70	2.16	.2413	.0540	-.0274	-.3125	.1772	-.3122
1.770	4.04	0.17	0.84	2.14	.2309	.0524	-.0270	-.2966	.1624	-.0434
1.770	3.98	0.20	0.01	2.13	.2226	.0511	-.0276	-.2893	.1322	.1856
1.770	4.11	0.14	1.70	2.16	.2413	.0539	-.0274	-.3126	.1740	-.3122
1.770	3.79	-5.07	7.55	3.44	.2607	.0524	-.0494	-.4551	.3105	-1.8092
1.770	3.98	-5.02	4.19	3.48	.2649	.0543	-.0414	-.5408	.2560	-.9417
1.770	4.12	-4.95	1.68	3.45	.2568	.0553	-.0319	-.5690	.2488	-.3058
1.770	4.11	-4.90	-0.01	3.44	.2390	.0537	-.0263	-.4643	.1791	-.3083
1.770	4.08	-4.88	0.00	5.10	.2488	.0542	-.0310	-.3741	.1509	-.1552
1.770	4.05	-4.91	1.23	5.08	.2549	.0542	-.0348	-.3946	.1719	-.3268
1.770	3.97	-4.93	2.51	5.11	.2563	.0538	-.0391	-.3904	.2019	-.6005
1.770	3.87	-4.96	4.19	5.11	.2569	.0528	-.0444	-.4169	.2170	-.8116
1.770	3.74	-5.05	7.55	5.12	.2460	.0501	-.0470	-.4244	.2336	-1.2739
1.770	3.82	-4.88	7.55	10.07	.2273	.0494	-.0367	-.2745	.1878	-.7137
1.770	3.81	-4.84	4.19	10.06	.2304	.0497	-.0383	-.2236	.1774	-.5772
1.770	3.76	-4.83	0.83	10.06	.2425	.0502	-.0450	-.1677	.2042	-.7827
1.770	3.83	-4.84	0.83	15.08	.2277	.0497	-.0367	-.1375	.2141	-.8044
1.770	3.83	-4.84	4.17	15.08	.2269	.0499	-.0362	-.1611	.2161	-.7434
1.770	3.83	-4.86	7.55	15.09	.2276	.0500	-.0363	-.1560	.2051	-.7723
1.770	4.11	-7.99	0.00	5.16	.2535	.0550	-.0312	-.5591	.2328	-.4694
1.770	4.07	-7.99	0.83	5.16	.2575	.0548	-.0345	-.5806	.2436	-.5453
1.770	3.97	-7.97	2.50	5.13	.2610	.0541	-.0406	-.6090	.2828	-.7825
1.770	3.85	-8.05	4.19	5.16	.2613	.0531	-.0466	-.6761	.3082	-.7365
1.770	3.71	-8.16	7.56	5.15	.2449	.0496	-.0479	-.7397	.3344	-1.2374
1.770	3.83	-10.03	0.83	15.13	.2277	.0497	-.0367	-.4654	.3229	-1.3754
1.770	3.83	-10.04	4.19	15.14	.2269	.0499	-.0361	-.4839	.3203	-1.3158
1.770	3.83	-10.03	7.55	15.14	.2273	.0500	-.0363	-.5036	.3130	-1.2154
1.770	3.82	-10.15	7.55	10.18	.2281	.0497	-.0369	-.6206	.3192	-1.2256
1.770	3.81	-10.08	4.20	10.16	.2278	.0495	-.0376	-.5844	.2976	-1.0177
1.770	3.73	-10.01	0.83	10.13	.2445	.0500	-.0469	-.5102	.3099	-1.2141
1.770	4.13	1.60	2.51	1.25	.2388	.0537	-.0251	-.2917	.1890	-.8529
1.770	4.07	1.63	1.67	1.24	.2296	.0523	-.0254	-.2942	.1760	-.4010
1.770	3.99	1.68	0.85	1.22	.2210	.0508	-.0266	-.2667	.1584	-.0526
1.770	3.91	1.71	0.00	1.19	.2145	.0496	-.0279	-.2325	.1341	.1983
1.770	3.87	3.78	0.00	0.49	.2110	.0486	-.0290	-.1739	.1181	.2913
1.770	4.00	3.67	1.67	0.54	.2220	.0508	-.0262	-.1725	.1656	-.4756
1.770	4.10	3.67	2.52	1.22	.2379	.0534	-.0264	-.2127	.1647	-.5333
1.770	4.03	3.64	1.67	1.25	.2286	.0519	-.0267	-.2198	.1483	-.1208
1.770	3.96	3.71	0.83	1.21	.2202	.0505	-.0276	-.2040	.1358	.2581
1.770	3.89	3.79	-0.01	1.18	.2132	.0493	-.0287	-.1814	.1135	.6079
1.770	3.86	6.89	0.00	1.17	.2115	.0490	-.0297	-.0940	.1031	1.2137

TABLE III.- AERODYNAMIC CHARACTERISTICS OF RETURN COMPONENT AND BOMB POD LESS FINS WITH MUTUAL INTERFERENCE; $\beta_P = 0^o$; $\beta_R = 0^o$ - Continued

M	α_R, deg	α_P, deg	x_a, in.	z_a, in.	$C_{L,R}$	$C'_{D,R}$	$C_{m,R}$	$C_{L,P}$	$C'_{D,P}$	$C_{m,P}$
1.770	3.92	6.81	0.83	1.19	.2173	.0501	-.0288	-.1225	.1185	.7968
1.770	3.98	6.80	1.68	1.19	.2249	.0513	-.0282	-.1330	.1278	.3889
1.770	4.04	6.74	2.51	1.22	.2327	.0526	-.0276	-.1438	.1399	.0358
1.770	5.53	12.66	0.89	2.05	.2863	.0636	-.0468	.2557	.1814	1.8573
1.770	5.59	12.60	1.73	2.05	.2948	.0651	-.0467	.1882	.1757	1.4094
1.770	5.64	12.49	2.55	2.09	.3030	.0667	-.0466	.0991	.1582	1.0510
1.770	5.72	12.40	4.24	2.11	.3151	.0685	-.0471	-.0589	.1605	.5859
1.770	5.55	12.37	7.58	3.40	.3193	.0673	-.0568	.0568	.2898	.4248
1.770	5.63	12.47	4.24	3.38	.3136	.0675	-.0510	.1074	.1735	1.0876
1.770	5.61	12.66	1.72	3.33	.2978	.0657	-.0467	.3756	.2286	1.8882
1.770	5.63	12.72	2.56	4.99	.3056	.0664	-.0484	.5219	.2664	1.8207
1.770	5.58	12.63	4.24	5.02	.3096	.0663	-.0521	.3693	.2354	1.6433
1.770	5.47	12.48	7.58	5.06	.3108	.0654	-.0576	.0613	.1932	1.1111
1.770	5.47	10.40	7.58	5.03	.3115	.0654	-.0582	-.0344	.1730	.7957
1.770	5.57	10.52	4.22	5.02	.3104	.0664	-.0527	.1482	.1826	1.4840
1.770	5.64	10.62	2.55	5.00	.3089	.0669	-.0493	.1742	.1729	1.9210
1.770	5.64	10.61	0.86	5.00	.3013	.0663	-.0465	.3081	.1961	1.7507
1.770	5.62	10.64	0.02	4.98	.2975	.0657	-.0460	.3574	.2243	1.6173
1.770	5.55	10.64	0.03	3.28	.2890	.0641	-.0466	.1875	.1749	1.9931
1.770	5.62	10.59	1.71	3.31	.3007	.0662	-.0472	.1206	.1636	1.7249
1.770	5.64	10.43	4.22	3.35	.3174	.0680	-.0518	-.0283	.1372	.8509
1.770	5.54	10.39	7.58	3.36	.3201	.0673	-.0575	.0035	.2804	.0575
1.770	5.74	10.35	4.22	2.11	.3190	.0692	-.0472	-.1383	.1461	.2513
1.770	5.67	10.44	2.55	2.08	.3059	.0674	-.0462	-.0224	.1384	.7948
1.770	5.61	10.47	1.70	2.07	.2968	.0656	-.0461	.0107	.1384	1.1686
1.770	5.56	10.57	0.87	2.03	.2895	.0642	-.0464	.0372	.1365	1.6943
1.770	5.51	10.60	0.02	2.02	.2813	.0630	-.0462	.1161	.1473	2.0010
1.770	5.58	5.35	0.01	2.09	.2870	.0642	-.0444	-.2051	.0967	1.1592
1.770	5.64	5.29	0.85	2.12	.2942	.0657	-.0439	-.2101	.1128	.7777
1.770	5.70	5.22	1.68	2.15	.3031	.0673	-.0438	-.2190	.1151	.3293
1.770	5.75	5.20	2.51	2.15	.3118	.0689	-.0445	-.2349	.1201	-.0218
1.770	5.79	5.15	4.19	2.15	.3244	.0706	-.0467	-.2450	.1505	-.7436
1.770	5.51	5.19	7.54	3.39	.3228	.0674	-.0596	-.0899	.2492	-.8829
1.770	5.64	5.23	4.19	3.39	.3214	.0683	-.0528	-.2057	.1175	-.0022
1.770	5.66	5.34	1.68	3.36	.3086	.0673	-.0477	-.1822	.1227	.8111
1.770	5.61	5.37	0.01	3.36	.2956	.0655	-.0456	-.1947	.0895	1.4575
1.770	5.65	5.47	0.02	5.00	.3035	.0668	-.0464	-.1144	.0905	1.6821
1.770	5.66	5.44	0.85	5.02	.3069	.0672	-.0470	-.1366	.0838	1.6197
1.770	5.63	5.40	2.52	5.02	.3130	.0673	-.0504	-.1538	.1069	1.1594
1.770	5.57	5.35	4.20	5.03	.3154	.0668	-.0546	-.1232	.1280	.6315
1.770	5.44	5.26	7.55	5.04	.3125	.0651	-.0596	-.1671	.1422	-.0404
1.770	5.49	5.44	7.55	10.02	.2966	.0639	-.0519	-.0277	.1326	1.1664
1.770	5.47	5.46	4.20	10.02	.3001	.0641	-.0545	.0864	.1612	1.1488
1.770	5.46	5.50	0.85	10.01	.3085	.0650	-.0574	.1708	.2083	.9205
1.770	5.50	0.33	7.55	15.04	.2960	.0640	-.0515	-.0015	.1669	.0821
1.770	5.50	0.31	4.20	15.05	.2963	.0641	-.0515	.0103	.1736	.0789
1.770	5.49	0.31	0.84	15.05	.2956	.0639	-.0517	.0162	.1769	.0363
1.770	5.44	0.33	0.84	10.03	.3111	.0651	-.0591	-.0075	.1703	.1110
1.770	5.47	0.33	4.20	10.03	.2999	.0640	-.0542	-.1082	.1311	.4523
1.770	5.49	0.30	7.55	10.02	.2964	.0639	-.0519	-.1584	.1337	.1103
1.770	5.42	0.11	7.55	5.06	.3145	.0652	-.0612	-.2686	.1773	-.9268
1.770	5.56	0.18	4.20	5.06	.3201	.0674	-.0565	-.2668	.1470	-.2437
1.770	5.63	0.20	2.54	5.07	.3165	.0678	-.0516	-.2570	.1477	.0682
1.770	5.69	0.27	0.84	5.05	.3128	.0681	-.0473	-.2718	.1028	.6054
1.770	5.70	0.27	0.01	5.06	.3079	.0677	-.0457	-.2553	.0971	.7651
1.770	5.69	0.19	0.01	3.40	.3011	.0669	-.0436	-.3169	.1193	.3714
1.770	5.71	0.15	1.70	3.41	.3154	.0689	-.0472	-.3373	.1566	-.1291
1.770	5.65	0.06	4.20	3.44	.3278	.0693	-.0543	-.3569	.1633	-.7118
1.770	5.49	0.01	7.55	3.43	.3277	.0678	-.0624	-.2352	.2679	-1.6188
1.770	5.84	-0.02	4.20	2.19	.3312	.0719	-.0465	-.4222	.2128	-1.4602
1.770	5.83	0.06	2.54	2.17	.3163	.0702	-.0418	-.4150	.1920	-.7509
1.770	5.80	0.10	1.70	2.16	.3104	.0692	-.0412	-.4176	.1773	-.3259
1.770	5.73	0.14	0.84	2.14	.2995	.0672	-.0409	-.3961	.1620	-.0308
1.770	5.66	0.17	0.01	2.12	.2907	.0654	-.0418	-.3623	.1333	.1790
1.770	5.45	-5.14	7.55	3.45	.3340	.0682	-.0662	-.5820	.3221	-2.0110
1.770	5.66	-5.05	4.20	3.48	.3358	.0700	-.0568	-.7346	.2736	-.6863
1.770	5.75	-4.87	-0.01	5.09	.3164	.0692	-.0457	-.4333	.1567	-.0441
1.770	5.72	-4.91	0.84	5.10	.3199	.0692	-.0482	-.4548	.1708	-.1338
1.770	5.64	-4.96	2.51	5.11	.3243	.0688	-.0537	-.4848	.2063	-.4945
1.770	5.54	-4.98	4.19	5.11	.3263	.0680	-.0593	-.5290	.2235	-.6329
1.770	5.39	-5.08	7.55	5.11	.3145	.0645	-.0629	-.5278	.2494	-1.4120
1.770	5.48	-4.90	7.55	10.06	.2942	.0635	-.0516	-.3105	.1770	-.7464
1.770	5.46	-4.84	4.19	10.05	.2978	.0637	-.0538	-.2841	.1725	-.3295
1.770	5.42	-4.83	0.83	10.05	.3114	.0649	-.0605	-.1685	.2006	-.7568
1.770	5.49	-4.84	0.83	15.07	.2964	.0640	-.0518	-.1374	.2179	-.8193
1.770	5.50	-4.86	4.19	15.08	.2957	.0642	-.0513	-.1558	.2137	-.7324
1.770	5.50	-4.83	7.55	15.07	.2959	.0641	-.0514	-.1744	.2024	-.7139
1.770	5.78	-8.00	0.00	5.16	.3209	.0703	-.0460	-.6412	.2360	-.2695
1.770	5.74	-8.00	0.83	5.16	.3253	.0701	-.0494	-.6680	.2532	-.3164
1.770	5.65	-8.02	2.51	5.15	.3321	.0697	-.0562	-.7425	.2987	-.4860

TABLE III.- AERODYNAMIC CHARACTERISTICS OF RETURN COMPONENT AND BOMB POD LESS FINS WITH MUTUAL INTERFERENCE; $\beta_P = 0^o$; $\beta_R = 0^o$ - Continued

M	α_R, deg	α_P, deg	x_a, in.	z_a, in.	$C_{L,R}$	$C'_{D,R}$	$C_{m,R}$	$C_{L,P}$	$C'_{D,P}$	$C_{m,P}$
1.770	5.53	-8.08	4.19	5.17	.3318	.0688	-.0620	-.8560	.3293	-.3594
1.770	5.37	-8.23	7.56	5.16	.3164	.0643	-.0645	-.9110	.3600	-1.2438
1.770	5.49	-10.04	0.83	15.12	.2960	.0639	-.0519	-.4710	.3256	-1.3742
1.770	5.49	-10.03	4.19	15.12	.2954	.0641	-.0514	-.4895	.3241	-1.3148
1.770	5.50	-10.05	7.55	15.15	.2960	.0641	-.0514	-.5238	.3000	-1.1973
1.770	5.49	-10.13	7.55	10.17	.2956	.0638	-.0519	-.7098	.3229	-.9689
1.770	5.47	-10.08	4.20	10.16	.2981	.0639	-.0535	-.6254	.3017	-.9105
1.770	5.39	-10.05	0.83	10.15	.3155	.0649	-.0630	-.5276	.3111	-1.1817
1.770	5.81	3.59	2.51	1.24	.3070	.0688	-.0398	-.3040	.1655	-.7956
1.770	5.73	3.62	1.67	1.24	.2969	.0667	-.0403	-.3057	.1445	-.3028
1.770	5.65	3.67	0.83	1.22	.2885	.0650	-.0414	-.2963	.1298	.2006
1.770	5.58	3.75	-0.01	1.18	.2824	.0636	-.0428	-.2624	.1083	.5747
1.770	5.54	5.76	0.00	0.51	.2786	.0627	-.0435	-.2197	.0898	.5899
1.770	5.67	5.72	1.68	0.51	.2900	.0651	-.0409	-.2010	.1333	-.3993
1.770	5.77	5.65	2.51	1.23	.3049	.0681	-.0409	-.2408	.1302	-.4710
1.770	5.70	5.72	1.68	1.20	.2946	.0662	-.0413	-.2368	.1179	.0203
1.770	5.62	5.76	0.84	1.19	.2872	.0645	-.0423	-.2331	.1066	.5388
1.770	5.56	5.82	0.00	1.17	.2817	.0634	-.0436	-.2047	.0898	.9551
1.770	5.52	8.96	0.02	1.13	.2790	.0628	-.0445	-.0836	.0930	1.4972
1.770	5.58	8.88	0.85	1.16	.2840	.0638	-.0435	-.1285	.0970	1.0443
1.770	5.64	8.82	1.69	1.18	.2919	.0654	-.0428	-.1508	.1071	.6125
1.770	5.72	8.76	2.55	1.20	.3013	.0673	-.0423	-.1738	.1249	.1122
2.010	0.12	13.13	0.89	2.03	.0623	.0322	-.0001	.8058	.3732	1.4622
2.010	0.15	13.13	1.74	2.02	.0680	.0324	-.0005	.7056	.3376	1.6437
2.010	0.16	13.08	2.56	2.03	.0725	.0323	-.0013	.6430	.3218	1.5535
2.010	0.16	13.01	4.25	2.06	.0776	.0322	-.0029	.5856	.3236	1.0622
2.010	0.08	12.93	7.58	3.35	.0754	.0315	-.0069	.5755	.3757	.8315
2.010	0.13	13.04	4.24	3.32	.0750	.0318	-.0041	.7174	.3526	1.3479
2.010	0.16	13.11	1.71	3.30	.0698	.0321	-.0006	.9194	.4035	1.3683
2.010	0.12	13.11	2.56	4.97	.0736	.0318	-.0040	1.0063	.4584	.8633
2.010	0.09	13.11	4.25	4.98	.0732	.0315	-.0055	.9209	.4243	1.3248
2.010	0.06	13.02	7.59	5.01	.0691	.0313	-.0058	.7347	.3686	1.0030
2.010	0.06	10.94	7.58	4.98	.0692	.0312	-.0060	.4796	.2835	.9373
2.010	0.09	11.02	4.23	4.98	.0738	.0315	-.0060	.6112	.3112	1.3934
2.010	0.12	11.01	2.55	4.97	.0754	.0319	-.0047	.6872	.3440	.9728
2.010	0.14	10.98	0.86	4.98	.0738	.0320	-.0028	.6491	.3345	1.0296
2.010	0.16	10.99	0.02	4.98	.0726	.0321	-.0016	.6689	.3357	1.0401
2.010	0.17	11.05	0.03	3.27	.0671	.0325	.0008	.6727	.3476	1.0691
2.010	0.17	11.06	1.71	3.28	.0741	.0323	-.0013	.6052	.3050	1.5030
2.010	0.13	10.95	4.22	3.32	.0762	.0319	-.0045	.4564	.2596	1.2376
2.010	0.07	10.90	7.58	3.32	.0750	.0315	-.0072	.3479	.2871	.7737
2.010	0.16	10.93	4.23	2.06	.0791	.0321	-.0033	.3341	.2466	.9627
2.010	0.18	10.98	2.55	2.05	.0759	.0325	-.0014	.3860	.2387	1.4098
2.010	0.17	10.98	1.71	2.05	.0717	.0325	-.0005	.4129	.2323	1.5870
2.010	0.14	11.05	0.87	2.01	.0661	.0324	-.0002	.5140	.2613	1.4825
2.010	0.11	11.03	0.03	2.01	.0604	.0320	-.0001	.6138	.3022	1.2703
2.010	0.16	5.77	0.01	2.10	.0660	.0325	.0006	.0520	.1634	1.3025
2.010	0.19	5.75	0.85	2.11	.0736	.0329	.0002	-.0125	.1507	1.3353
2.010	0.21	5.71	1.68	2.14	.0797	.0329	-.0008	-.0434	.1422	1.1440
2.010	0.21	5.71	2.52	2.12	.0820	.0327	-.0017	-.0490	.1484	.8849
2.010	0.17	5.67	4.20	2.12	.0838	.0323	-.0045	-.0092	.1779	.3364
2.010	0.05	5.66	7.55	3.38	.0763	.0314	-.0086	.0354	.1943	.3086
2.010	0.12	5.74	4.20	3.36	.0805	.0319	-.0062	.0917	.1622	.9475
2.010	0.19	5.82	1.69	3.34	.0790	.0325	-.0021	.0385	.1577	1.4131
2.010	0.20	5.80	0.02	3.34	.0739	.0328	.0007	.0577	.1707	1.2846
2.010	0.16	5.82	0.02	5.00	.0776	.0322	-.0031	.1367	.1813	1.0485
2.010	0.14	5.84	0.85	4.98	.0785	.0321	-.0043	.1633	.1860	.9034
2.010	0.10	5.84	2.52	4.99	.0782	.0318	-.0063	.1097	.1849	1.0705
2.010	0.07	5.80	4.19	5.01	.0761	.0316	-.0074	.0774	.1750	1.2019
2.010	0.05	5.75	7.55	5.01	.0693	.0311	-.0064	.0543	.1803	.5950
2.010	0.08	5.80	7.55	10.03	.0660	.0313	-.0035	.1560	.1882	.9813
2.010	0.08	5.81	4.20	10.01	.0652	.0312	-.0037	.2338	.2064	.7913
2.010	0.07	5.85	0.85	10.00	.0672	.0312	-.0047	.2465	.2063	.8340
2.010	0.08	0.66	7.55	15.06	.0648	.0313	-.0033	.0040	.1606	.1209
2.010	0.08	0.64	4.20	15.07	.0644	.0313	-.0033	.0104	.1620	.1345
2.010	0.08	0.65	0.84	15.07	.0649	.0314	-.0034	.0170	.1637	.1016
2.010	0.07	0.69	0.84	10.02	.0660	.0313	-.0044	-.0033	.1584	.2299
2.010	0.07	0.68	4.20	10.02	.0652	.0313	-.0037	-.0027	.1642	.1380
2.010	0.08	0.71	7.55	10.01	.0648	.0315	-.0033	-.0424	.1612	.2099
2.010	0.05	0.60	7.55	5.03	.0693	.0311	-.0067	-.0716	.1779	-.3646
2.010	0.06	0.53	4.20	5.05	.0797	.0314	-.0094	-.1210	.1627	.2922
2.010	0.09	0.63	2.54	5.05	.0818	.0317	-.0082	-.1013	.1540	.2871
2.010	0.14	0.66	0.84	5.04	.0827	.0322	-.0059	-.0686	.1529	.2630
2.010	0.17	0.65	0.00	5.05	.0829	.0323	-.0043	-.0557	.1605	.2902
2.010	0.24	0.63	0.01	3.38	.0803	.0331	.0004	-.1478	.1453	.4527
2.010	0.20	0.62	1.70	3.39	.0859	.0327	-.0034	-.1806	.1491	.4767
2.010	0.11	0.57	4.20	3.40	.0844	.0320	-.0079	-.1318	.1746	-.1033
2.010	0.04	0.54	7.55	3.39	.0786	.0313	-.0102	-.1031	.1930	-.5404
2.010	0.18	0.54	4.20	2.14	.0902	.0325	-.0058	-.1554	.1997	-.5723
2.010	0.24	0.57	2.54	2.15	.0900	.0330	-.0026	-.1973	.1685	-.0552

TABLE III.- AERODYNAMIC CHARACTERISTICS OF RETURN COMPONENT AND BOMB POD LESS FINS WITH MUTUAL INTERFERENCE; $\beta_P = 0^o$; $\beta_R = 0^o$ - Continued

M	α_R, deg	α_P, deg	x_a, in.	z_a, in.	$C_{L,R}$	$C'_{D,R}$	$C_{m,R}$	$C_{L,P}$	$C'_{D,P}$	$C_{m,P}$
2.010	0.25	0.61	0.84	2.13	.0810	.0335	.0010	-.2000	.1535	.4055
2.010	0.23	0.62	0.01	2.12	.0729	.0332	.0023	-.1870	.1451	.4479
2.010	0.25	0.61	0.84	2.14	.0810	.0334	.0009	-.1996	.1507	.3746
2.010	0.32	-4.54	0.00	2.19	.0825	.0341	.0042	-.4301	.2131	-.2483
2.010	0.32	-4.57	0.83	2.20	.0907	.0341	.0018	-.4483	.2260	-.3198
2.010	0.31	-4.58	1.67	2.20	.0973	.0340	-.0013	-.4670	.2378	-.3606
2.010	0.27	-4.58	2.51	2.20	.0995	.0333	-.0043	-.4653	.2491	-.4681
2.010	0.19	-4.63	4.19	2.20	.0984	.0327	-.0083	-.4349	.2629	-.9822
2.010	0.02	-4.55	7.55	3.39	.0807	.0310	-.0121	-.3238	.2464	-1.1807
2.010	0.11	-4.53	4.19	3.42	.0915	.0321	-.0107	-.3203	.2350	-.8292
2.010	0.22	-4.51	1.68	3.41	.0948	.0328	-.0052	-.3572	.2144	-.4057
2.010	0.28	-4.45	-0.01	3.41	.0901	.0334	-.0002	-.3409	.1814	-.2728
2.010	0.18	-4.50	-0.01	5.08	.0907	.0327	-.0062	-.2210	.1864	-.5654
2.010	0.14	-4.54	0.84	5.10	.0898	.0324	-.0082	-.2403	.1921	-.5602
2.010	0.08	-4.52	2.51	5.08	.0874	.0318	-.0108	-.2861	.1970	-.4865
2.010	0.04	-4.52	4.19	5.07	.0822	.0313	-.0115	-.2837	.2156	-.6712
2.010	0.04	-4.57	7.55	5.07	.0694	.0308	-.0069	-.2602	.2333	-1.0452
2.010	0.08	-4.50	7.55	10.07	.0649	.0314	-.0033	-.1998	.1980	-.6629
2.010	0.08	-4.46	4.19	10.05	.0654	.0312	-.0037	-.1805	.1981	-.6375
2.010	0.07	-4.43	0.83	10.02	.0658	.0313	-.0043	-.1672	.2011	-.6411
2.010	0.08	-4.47	0.83	15.07	.0653	.0315	-.0034	-.1535	.2039	-.7061
2.010	0.08	-4.47	4.19	15.08	.0650	.0314	-.0034	-.1600	.2039	-.7045
2.010	0.08	-4.49	7.55	15.09	.0650	.0314	-.0034	-.1799	.2048	-.6531
2.010	0.18	-7.60	0.00	5.14	.0966	.0329	-.0080	-.4115	.2452	-.8933
2.010	0.14	-7.59	0.83	5.13	.0953	.0326	-.0102	-.4247	.2482	-.8746
2.010	0.06	-7.54	2.51	5.09	.0899	.0318	-.0127	-.4766	.2573	-.7991
2.010	0.02	-7.62	4.19	5.12	.0843	.0311	-.0130	-.4060	.2780	-.9491
2.010	0.04	-7.68	7.55	5.11	.0694	.0308	-.0069	-.5209	.3049	-1.1235
2.010	0.00	-7.66	7.55	3.45	.0813	.0308	-.0133	-.6176	.3223	-1.1590
2.010	0.09	-7.66	4.19	3.44	.0959	.0323	-.0129	-.5865	.3195	-.9063
2.010	0.08	-9.62	0.83	15.10	.0653	.0314	-.0034	-.5146	.3165	-1.2282
2.010	0.08	-9.66	4.19	15.14	.0657	.0313	-.0035	-.5211	.3172	-1.2109
2.010	0.08	-9.65	7.55	15.14	.0657	.0313	-.0035	-.5414	.3166	-1.1595
2.010	0.08	-9.71	7.55	10.16	.0654	.0314	-.0034	-.5891	.3121	-1.0861
2.010	0.07	-9.69	4.19	10.15	.0650	.0311	-.0036	-.5624	.3143	-1.0314
2.010	0.07	-9.68	0.83	10.14	.0662	.0312	-.0044	-.5158	.3107	-1.1977
2.010	0.34	-2.01	2.53	1.24	.0965	.0342	.0006	-.3825	.2148	-.5866
2.010	0.33	-1.99	1.68	1.22	.0891	.0341	.0029	-.3579	.2034	-.3938
2.010	0.30	-1.98	0.84	1.22	.0796	.0336	.0043	-.3136	.1851	-.2369
2.010	0.24	-1.93	0.00	1.20	.0691	.0330	.0045	-.2755	.1734	-.0936
2.010	0.18	0.08	0.00	0.52	.0617	.0322	.0034	-.1765	.1510	-.0914
2.010	0.32	0.00	2.08	0.56	.0826	.0335	.0044	-.2190	.1950	-.6328
2.010	0.31	0.03	2.53	1.22	.0932	.0339	.0004	-.2594	.1823	-.4532
2.010	0.30	0.06	1.69	1.21	.0851	.0336	.0022	-.2478	.1684	-.2106
2.010	0.26	0.09	0.84	1.20	.0768	.0332	.0032	-.2296	.1503	.0458
2.010	0.21	0.12	0.01	1.18	.0670	.0326	.0034	-.1983	.1432	.2832
2.010	0.17	3.19	0.01	1.17	.0644	.0325	.0019	-.1171	.1236	.8279
2.010	0.22	3.16	0.86	1.20	.0727	.0330	.0018	-.1487	.1287	.5907
2.010	0.25	3.10	1.68	1.23	.0815	.0334	.0009	-.1544	.1469	.2849
2.010	0.27	3.12	2.53	1.22	.0867	.0336	-.0000	-.1470	.1623	-.0244
2.010	2.20	13.11	0.89	2.03	.1440	.0392	-.0175	.6854	.3320	1.7590
2.010	2.23	13.09	1.73	2.03	.1498	.0399	-.0176	.5766	.2966	1.8049
2.010	2.25	13.03	2.56	2.04	.1544	.0400	-.0182	.4923	.2809	1.6075
2.010	2.26	12.92	4.24	2.07	.1611	.0402	-.0200	.3551	.2673	1.0145
2.010	2.16	12.89	7.59	3.33	.1580	.0392	-.0244	.3436	.3247	.8410
2.010	2.21	12.99	4.24	3.33	.1574	.0393	-.0212	.5960	.3135	1.4055
2.010	2.24	13.10	1.73	3.30	.1515	.0396	-.0176	.8259	.3775	1.6706
2.010	2.22	13.09	2.56	4.97	.1573	.0393	-.0210	.9599	.4414	.9565
2.010	2.18	13.10	4.23	4.98	.1558	.0391	-.0225	.8362	.3944	1.6042
2.010	2.14	12.96	7.59	5.02	.1533	.0385	-.0240	.6007	.3323	1.0248
2.010	2.14	10.89	7.58	4.99	.1530	.0385	-.0241	.3425	.2539	.9547
2.010	2.18	10.98	4.23	4.99	.1569	.0391	-.0233	.5296	.2862	1.5793
2.010	2.21	11.02	2.55	4.96	.1584	.0395	-.0217	.6341	.3227	1.1101
2.010	2.23	10.97	0.86	4.98	.1554	.0395	-.0195	.6332	.3301	1.0627
2.010	2.25	11.01	0.03	4.97	.1549	.0397	-.0185	.6646	.3382	1.1322
2.010	2.25	11.01	0.03	3.28	.1466	.0396	-.0159	.6128	.3239	1.1621
2.010	2.25	11.04	1.72	3.29	.1545	.0397	-.0182	.5027	.2751	1.7421
2.010	2.22	10.91	4.22	3.32	.1610	.0396	-.0222	.3304	.2326	1.2719
2.010	2.16	10.83	7.58	3.33	.1594	.0390	-.0251	.1671	.2528	.7324
2.010	2.26	10.85	4.23	2.07	.1643	.0403	-.0207	.1410	.2052	.8986
2.010	2.27	10.92	2.55	2.05	.1583	.0402	-.0185	.2599	.2061	1.3851
2.010	2.26	10.95	1.71	2.06	.1540	.0399	-.0177	.2992	.2039	1.7040
2.010	2.23	11.05	0.87	2.00	.1474	.0395	-.0174	.4090	.2303	1.7362
2.010	2.19	11.02	0.03	2.01	.1404	.0386	-.0174	.5195	.2817	1.5229
2.010	2.15	5.85	0.85	9.99	.1485	.0382	-.0226	.2531	.2122	.8188
2.010	2.17	5.81	4.20	10.02	.1461	.0383	-.0210	.2341	.2073	.8087
2.010	2.17	5.82	7.55	10.01	.1457	.0384	-.0206	.1496	.1848	1.0467
2.010	2.14	5.71	7.55	5.01	.1514	.0382	-.0243	-.0221	.1651	.4791
2.010	2.17	5.79	4.20	5.01	.1578	.0389	-.0247	-.0060	.1507	1.3193
2.010	2.20	5.79	2.52	5.02	.1595	.0395	-.0233	.0539	.1487	1.2266

TABLE III.- AERODYNAMIC CHARACTERISTICS OF RETURN COMPONENT AND BOMB POD LESS FINS WITH MUTUAL INTERFERENCE; $\beta_P = 0^o$; $\beta_R = 0^o$ - Continued

M	α_R, deg	α_P, deg	x_a, in.	z_a, in.	$C_{L,R}$	$C_{D',R}$	$C_{m,R}$	$C_{L,P}$	$C_{D',P}$	$C_{m,P}$
2.010	2.24	5.79	0.85	5.02	.1593	.0399	-.0210	.0851	.1668	1.1871
2.010	2.26	5.82	0.01	5.00	.1568	.0398	-.0194	.1175	.1748	1.1169
2.010	2.30	5.79	0.02	3.34	.1535	.0402	-.0161	-.0120	.1394	1.4443
2.010	2.29	5.81	1.69	3.33	.1605	.0403	-.0189	-.0647	.1346	1.5350
2.010	2.22	5.71	4.20	3.36	.1622	.0396	-.0233	-.0682	.1489	.7990
2.010	2.15	5.65	7.55	3.36	.1595	.0389	-.0265	-.0608	.1865	.0589
2.010	2.28	5.62	4.19	2.13	.1669	.0405	-.0216	-.1255	.1706	.1688
2.010	2.31	5.64	2.51	2.15	.1643	.0408	-.0189	-.1389	.1343	.8029
2.010	2.31	5.70	1.68	2.12	.1597	.0406	-.0176	-.1270	.1245	1.1533
2.010	2.29	5.74	0.85	2.11	.1524	.0401	-.0163	-.1028	.1260	1.4689
2.010	2.25	5.73	0.01	2.12	.1453	.0395	-.0160	-.0643	.1356	1.5045
2.010	2.32	0.57	0.01	2.15	.1522	.0403	-.0141	-.2925	.1346	.6003
2.010	2.35	0.58	0.84	2.14	.1599	.0410	-.0155	-.2981	.1439	.4022
2.010	2.35	0.58	1.70	2.13	.1677	.0414	-.0175	-.3038	.1606	.2042
2.010	2.35	0.55	2.54	2.14	.1731	.0416	-.0197	-.3088	.1660	-.0403
2.010	2.29	0.48	4.20	2.15	.1730	.0409	-.0231	-.2588	.1854	-.7601
2.010	2.13	0.48	7.55	3.40	.1617	.0389	-.0283	-.1799	.1996	-.8584
2.010	2.21	0.51	4.20	3.41	.1662	.0399	-.0251	-.2100	.1750	-.1743
2.010	2.30	0.58	1.70	3.40	.1664	.0407	-.0199	-.2596	.1398	.5305
2.010	2.33	0.61	0.01	3.39	.1593	.0407	-.0160	-.2413	.1150	.7869
2.010	2.27	0.67	0.01	5.03	.1624	.0403	-.0205	-.0890	.1519	.3773
2.010	2.19	0.65	2.54	5.04	.1632	.0396	-.0251	-.1881	.1335	.5883
2.010	2.15	0.60	4.20	5.05	.1612	.0391	-.0267	-.1865	.1576	.2805
2.010	2.12	0.57	7.55	5.03	.1513	.0380	-.0249	-.1432	.1780	-.4537
2.010	2.17	0.70	7.55	10.01	.1460	.0384	-.0205	-.0689	.1579	.2799
2.010	2.24	0.64	0.84	5.05	.1630	.0401	-.0222	-.1085	.1407	.3828
2.010	2.16	0.71	4.20	10.00	.1460	.0383	-.0210	-.0095	.1690	.1564
2.010	2.15	0.69	0.84	10.02	.1477	.0382	-.0223	-.0099	.1655	.2335
2.010	2.17	0.65	0.84	15.06	.1456	.0384	-.0205	.0106	.1682	.1203
2.010	2.17	0.67	4.20	15.05	.1461	.0384	-.0205	.0104	.1698	.1358
2.010	2.17	0.66	7.55	15.05	.1453	.0384	-.0204	.0041	.1687	.1068
2.010	2.17	-4.45	7.55	15.06	.1456	.0384	-.0205	-.1794	.2156	-.6690
2.010	2.17	-4.49	4.19	15.08	.1453	.0384	-.0204	-.1661	.2124	-.7034
2.010	2.15	-4.45	0.83	10.03	.1485	.0382	-.0224	-.1740	.2033	-.6246
2.010	2.16	-4.46	4.19	10.05	.1457	.0381	-.0210	-.1943	.1995	-.5886
2.010	2.17	-4.50	7.55	10.07	.1453	.0385	-.0204	-.2546	.1923	-.4651
2.010	2.12	-4.57	7.55	5.06	.1518	.0381	-.0255	-.3859	.2381	-.9368
2.010	2.13	-4.54	4.19	5.07	.1646	.0391	-.0290	-.3564	.2238	-.6066
2.010	2.17	-4.49	2.51	5.06	.1682	.0398	-.0277	-.3542	.1905	-.3156
2.010	2.24	-4.49	0.83	5.07	.1702	.0406	-.0244	-.2896	.1709	-.3948
2.010	2.29	-4.48	-0.01	5.07	.1698	.0408	-.0220	-.2625	.1783	-.4326
2.010	2.38	-4.49	-0.01	3.43	.1678	.0416	-.0163	-.4217	.1843	-.0670
2.010	2.33	-4.53	1.68	3.42	.1755	.0413	-.0216	-.4775	.2203	-.1590
2.010	2.21	-4.58	4.19	3.44	.1742	.0405	-.0278	-.4711	.2608	-.6673
2.010	2.10	-4.63	7.55	3.41	.1644	.0385	-.0305	-.4472	.2610	-1.3975
2.010	2.19	-7.70	4.19	3.46	.1795	.0404	-.0303	-.8156	.3644	-.4604
2.010	2.08	-7.74	7.55	3.46	.1664	.0382	-.0323	-.8252	.3603	-1.1655
2.010	2.12	-7.71	7.56	5.12	.1526	.0376	-.0257	-.7113	.3369	-.7505
2.010	2.11	-9.99	4.35	6.91	.1538	.0377	-.0265	-.7404	.3379	-.7694
2.010	2.09	-9.95	2.68	6.96	.1617	.0379	-.0301	-.6833	.3195	-.8317
2.010	2.24	-7.59	0.83	5.13	.1749	.0407	-.0260	-.5018	.2347	-.5791
2.010	2.29	-7.60	0.00	5.14	.1754	.0410	-.0237	-.4550	.2322	-.7456
2.010	2.15	-9.63	0.83	10.11	.1478	.0380	-.0222	-.5219	.3219	-1.1825
2.010	2.16	-9.71	4.19	10.16	.1462	.0382	-.0211	-.5756	.3238	-1.0142
2.010	2.43	0.01	2.53	1.21	.1733	.0424	-.0152	-.4106	.1925	-.4286
2.010	2.41	0.02	1.69	1.22	.1645	.0417	-.0134	-.3729	.1730	-.1616
2.010	2.37	0.09	0.84	1.18	.1548	.0408	-.0125	-.3352	.1551	.1054
2.010	2.31	0.09	0.01	1.19	.1465	.0399	-.0130	-.3036	.1411	.3125
2.010	2.26	2.10	0.00	0.52	.1402	.0390	-.0139	-.2099	.1278	.2709
2.010	2.37	2.06	1.67	0.53	.1559	.0407	-.0124	-.2603	.1670	-.3162
2.010	2.39	1.99	2.51	1.26	.1679	.0418	-.0156	-.2997	.1661	-.2441
2.010	2.37	2.06	1.68	1.22	.1609	.0412	-.0144	-.2813	.1452	.0744
2.010	2.33	2.08	0.85	1.22	.1530	.0405	-.0139	-.2564	.1275	.4065
2.010	2.28	2.12	0.00	1.19	.1440	.0396	-.0139	-.2252	.1212	.7062
2.010	2.24	5.24	0.00	1.18	.1427	.0391	-.0157	-.1313	.1049	1.3118
2.010	2.28	5.20	0.84	1.18	.1487	.0398	-.0154	-.1626	.1095	.9661
2.010	2.32	5.16	1.67	1.19	.1573	.0407	-.0158	-.1747	.1247	.5685
2.010	2.35	5.14	2.52	1.20	.1638	.0412	-.0166	-.1808	.1438	.2002
2.010	4.26	13.10	0.89	2.04	.2163	.0506	-.0328	.5980	.2825	1.9251
2.010	4.30	13.07	1.73	2.03	.2239	.0516	-.0330	.4721	.2472	1.8675
2.010	4.32	12.97	2.56	2.07	.2298	.0523	-.0340	.3590	.2195	1.6980
2.010	4.33	12.86	4.24	2.09	.2406	.0531	-.0368	.1683	.1939	.9962
2.010	4.23	12.80	7.58	3.36	.2361	.0517	-.0409	.1565	.2553	.7189
2.010	4.28	12.96	4.24	3.34	.2338	.0519	-.0373	.4262	.2494	1.6016
2.010	4.31	13.10	1.73	3.30	.2263	.0517	-.0332	.7073	.3318	1.7841
2.010	4.28	13.07	2.56	4.98	.2317	.0517	-.0367	.8274	.3785	1.1965
2.010	4.25	13.07	4.25	4.99	.2313	.0515	-.0383	.7179	.3462	1.6881
2.010	4.21	12.93	7.59	5.03	.2292	.0507	-.0402	.4118	.2684	1.0658
2.010	4.20	10.84	7.58	5.00	.2292	.0505	-.0405	.1764	.2052	.9922
2.010	4.25	10.96	4.23	5.00	.2324	.0517	-.0389	.4104	.2439	1.6961

TABLE III.- AERODYNAMIC CHARACTERISTICS OF RETURN COMPONENT AND BOMB POD LESS FINS WITH MUTUAL INTERFERENCE; $\beta_P = 0^o$; $\beta_R = 0^o$ - Continued

M	α_R, deg	α_P, deg	x_a, in.	z_a, in.	$C_{L,R}$	$C_{D',R}$	$C_{m,R}$	$C_{L,P}$	$C_{D',P}$	$C_{m,P}$
2.010	4.28	10.99	2.55	4.99	.2324	.0519	-.0372	.5133	.2705	1.3912
2.010	4.30	10.98	0.86	4.98	.2296	.0519	-.0348	.5949	.3005	1.2302
2.010	4.32	11.02	0.03	4.97	.2283	.0519	-.0338	.6247	.3146	1.3136
2.010	4.31	11.01	0.03	3.28	.2202	.0513	-.0315	.4988	.2774	1.3015
2.010	4.33	11.02	1.71	3.29	.2290	.0521	-.0335	.3862	.2229	1.9169
2.010	4.29	10.89	3.82	3.26	.2346	.0520	-.0372	.2025	.1883	1.5225
2.010	4.24	10.76	6.79	3.21	.2364	.0518	-.0407	.0027	.1898	.5771
2.010	4.34	10.80	4.22	2.09	.2413	.0532	-.0371	-.0013	.1664	.8071
2.010	4.34	10.89	2.55	2.06	.2336	.0527	-.0344	.1092	.1543	1.4971
2.010	4.32	10.92	1.71	2.06	.2271	.0521	-.0332	.1783	.1652	1.8487
2.010	4.28	10.98	0.87	2.03	.2186	.0510	-.0325	.2839	.1974	2.0043
2.010	4.24	11.03	0.03	2.00	.2117	.0499	-.0324	.4094	.2422	1.8174
2.010	4.30	5.73	0.01	2.11	.2192	.0511	-.0315	-.1868	.1032	1.6900
2.010	4.34	5.71	0.85	2.12	.2279	.0523	-.0322	-.1987	.1012	1.4941
2.010	4.36	5.67	1.68	2.13	.2362	.0532	-.0337	-.2103	.1098	1.1133
2.010	4.37	5.63	2.52	2.14	.2416	.0537	-.0350	-.2285	.1165	.7192
2.010	4.35	5.56	4.19	2.14	.2476	.0538	-.0381	-.2118	.1359	-.1604
2.010	4.21	5.59	7.54	3.37	.2380	.0516	-.0431	-.1367	.1865	-.3814
2.010	4.28	5.67	4.20	3.37	.2398	.0525	-.0394	-.1583	.1379	.7001
2.010	4.35	5.77	1.69	3.35	.2357	.0529	-.0344	-.1738	.1047	1.6263
2.010	4.34	5.77	0.01	3.35	.2275	.0523	-.0319	-.1086	.1036	1.7316
2.010	4.32	5.82	0.02	5.00	.2323	.0523	-.0347	.0848	.1641	1.2643
2.010	4.31	5.79	0.85	5.02	.2347	.0523	-.0364	.0462	.1538	1.3208
2.010	4.27	5.84	2.52	4.99	.2365	.0522	-.0391	-.0515	.1269	1.6238
2.010	4.23	5.78	4.20	5.01	.2353	.0517	-.0408	-.0892	.1311	1.3114
2.010	4.18	5.67	7.55	5.02	.2294	.0503	-.0414	-.0983	.1519	.3156
2.010	4.22	5.82	7.55	10.01	.2210	.0501	-.0364	.1306	.1750	1.1137
2.010	4.22	5.81	4.20	10.01	.2214	.0502	-.0368	.2271	.2129	.8108
2.010	4.20	5.84	0.85	10.00	.2258	.0504	-.0396	.2468	.2129	.7748
2.010	4.22	0.66	0.84	15.05	.2209	.0502	-.0364	.0107	.1643	.0893
2.010	4.19	0.68	0.84	10.02	.2248	.0502	-.0396	-.0161	.1601	.1888
2.010	4.22	0.71	4.20	10.00	.2223	.0503	-.0370	-.0159	.1579	.1426
2.010	4.22	0.71	7.55	10.01	.2208	.0502	-.0364	-.1357	.1356	.5587
2.010	4.17	0.56	7.55	5.02	.2301	.0502	-.0423	-.2408	.1660	-.4887
2.010	4.21	0.60	4.20	5.04	.2387	.0518	-.0429	-.2448	.1503	.2038
2.010	4.25	0.62	2.54	5.06	.2395	.0524	-.0408	-.2739	.1160	.7649
2.010	4.32	0.64	0.84	5.05	.2404	.0531	-.0376	-.1887	.1233	.7114
2.010	4.34	0.64	0.01	5.05	.2384	.0531	-.0356	-.1288	.1285	.5110
2.010	4.38	0.60	0.01	3.39	.2337	.0532	-.0317	-.3204	.1117	.9155
2.010	4.37	0.57	1.70	3.40	.2446	.0539	-.0359	-.3446	.1419	.5224
2.010	4.28	0.49	4.20	3.41	.2448	.0531	-.0414	-.3205	.1836	-.2830
2.010	4.18	0.42	7.55	3.41	.2405	.0517	-.0453	-.2624	.2035	-1.2669
2.010	4.36	0.45	4.20	2.16	.2529	.0544	-.0394	-.4156	.1935	-.7959
2.010	4.42	0.50	2.54	2.16	.2494	.0548	-.0352	-.4401	.1791	.0254
2.010	4.42	0.52	1.70	2.15	.2426	.0545	-.0327	-.4287	.1574	.2990
2.010	4.41	0.55	0.84	2.14	.2344	.0537	-.0304	-.4166	.1330	.5264
2.010	4.38	0.57	0.01	2.13	.2252	.0525	-.0290	-.3713	.1184	.6372
2.010	4.15	-4.70	7.55	3.43	.2458	.0516	-.0488	-.6473	.2936	-1.4031
2.010	4.27	-4.61	4.19	3.45	.2535	.0535	-.0447	-.6876	.2790	-.3475
2.010	4.36	-4.48	-0.01	5.07	.2448	.0538	-.0369	-.3444	.1554	-.1342
2.010	4.32	-4.50	0.81	5.09	.2467	.0535	-.0395	-.3966	.1670	.0492
2.010	4.24	-4.53	2.51	5.09	.2457	.0527	-.0436	-.4392	.1949	-.1385
2.010	4.19	-4.56	4.19	5.08	.2432	.0519	-.0457	-.4818	.2172	-.3876
2.010	4.16	-4.61	7.55	5.07	.2311	.0499	-.0435	-.5491	.2488	-.7528
2.010	4.22	-4.48	7.55	10.06	.2213	.0502	-.0365	-.3079	.1848	-.2808
2.010	4.22	-4.47	4.19	10.05	.2221	.0501	-.0372	-.2069	.1974	-.5837
2.010	4.19	-4.43	0.83	10.02	.2254	.0501	-.0397	-.1800	.2044	-.6213
2.010	4.23	-4.48	0.83	15.07	.2218	.0504	-.0366	-.1710	.2076	-.7403
2.010	4.36	-7.59	0.00	5.14	.2497	.0544	-.0383	-.5561	.2266	-.3333
2.010	4.32	-7.59	0.83	5.13	.2520	.0542	-.0414	-.5951	.2375	-.2151
2.010	4.23	-7.56	2.51	5.10	.2505	.0533	-.0457	-.6634	.2667	-.2882
2.010	4.17	-7.65	4.19	5.13	.2451	.0518	-.0477	-.7500	.3056	-.3559
2.010	4.14	-7.73	7.56	5.12	.2299	.0496	-.0439	-.9141	.3521	-.5721
2.010	4.22	-9.67	7.55	15.15	.2214	.0503	-.0365	-.5528	.3286	-1.1402
2.010	4.22	-9.73	7.55	10.17	.2215	.0504	-.0365	-.6954	.3231	-.7499
2.010	4.21	-9.69	4.19	10.15	.2219	.0501	-.0372	-.5833	.3101	-.9949
2.010	4.19	-9.66	0.83	10.13	.2249	.0501	-.0397	-.5353	.3146	-1.1613
2.010	4.47	1.96	2.51	1.26	.2431	.0548	-.0300	-.4235	.1636	-.2878
2.010	4.44	2.01	1.67	1.24	.2344	.0538	-.0288	-.4058	.1425	.1383
2.010	4.39	2.06	0.85	1.22	.2245	.0523	-.0283	-.3547	.1265	.4631
2.010	4.33	2.09	0.00	1.20	.2161	.0511	-.0289	-.3159	.1066	.6682
2.010	4.29	4.11	0.00	0.52	.2115	.0502	-.0296	-.2542	.0913	.6356
2.010	4.41	4.02	1.67	0.55	.2270	.0526	-.0282	-.2991	.1400	-.1371
2.010	4.44	3.99	2.51	1.25	.2412	.0544	-.0310	-.3449	.1347	-.0480
2.010	4.41	4.04	1.67	1.24	.2329	.0534	-.0301	-.3261	.1081	.4086
2.010	4.36	4.11	0.84	1.21	.2232	.0519	-.0297	-.2757	.1016	.7951
2.010	4.30	4.16	-0.01	1.18	.2150	.0507	-.0300	-.2505	.0899	1.1113
2.010	4.26	7.24	0.00	1.18	.2129	.0501	-.0315	-.1184	.0904	1.7061
2.010	4.31	7.21	0.84	1.18	.2200	.0513	-.0314	-.1688	.0891	1.3352
2.010	4.36	7.17	1.68	1.19	.2289	.0526	-.0317	-.2000	.0971	.8824

TABLE III.- AERODYNAMIC CHARACTERISTICS OF RETURN COMPONENT AND BOMB POD LESS FINS WITH MUTUAL INTERFERENCE; $\beta_P = 0^o$; $\beta_R = 0^o$ - Continued

M	α_R, deg	α_P, deg	x_a, in.	z_a, in.	$C_{L,R}$	$C_{D',R}$	$C_{m,R}$	$C_{L,P}$	$C_{D',P}$	$C_{m,P}$
2.010	4.39	7.10	2.51	1.22	.2365	.0535	-.0322	-.2188	.1114	.4410
2.010	5.87	13.07	0.89	2.04	.2689	.0628	-.0440	.4899	.2524	2.0774
2.010	5.91	13.03	1.73	2.04	.2775	.0642	-.0448	.3458	.2111	1.9636
2.010	5.94	12.93	2.55	2.07	.2850	.0652	-.0459	.2275	.1796	1.7046
2.010	5.96	12.79	4.24	2.10	.2961	.0666	-.0484	.0243	.1545	.8368
2.010	5.84	12.75	7.58	3.36	.2923	.0650	-.0535	.0338	.2436	.4445
2.010	5.91	12.91	4.24	3.35	.2887	.0651	-.0489	.2885	.2085	1.6254
2.010	5.94	13.04	1.72	3.32	.2813	.0646	-.0447	.5838	.2863	1.9281
2.010	5.90	13.06	2.56	4.98	.2857	.0647	-.0481	.7212	.3414	1.4895
2.010	5.88	13.04	4.24	5.00	.2866	.0645	-.0498	.6200	.3044	1.7462
2.010	5.82	12.86	7.58	5.04	.2839	.0634	-.0523	.2418	.2195	1.1435
2.010	5.81	10.79	7.58	5.01	.2836	.0631	-.0527	.0295	.1727	1.0782
2.010	5.87	10.93	4.22	5.01	.2882	.0647	-.0507	.2841	.2064	1.7921
2.010	5.90	11.00	2.55	4.97	.2875	.0650	-.0488	.4128	.2304	1.6800
2.010	5.93	10.98	0.86	4.98	.2846	.0648	-.0462	.5458	.2719	1.4435
2.010	5.94	11.00	0.02	4.98	.2818	.0648	-.0449	.5995	.3031	1.4432
2.010	5.92	11.02	0.03	3.26	.2739	.0638	-.0433	.3975	.2426	1.6218
2.010	5.95	10.99	1.71	3.30	.2840	.0651	-.0451	.2511	.1842	2.0940
2.010	5.91	10.86	4.22	3.33	.2915	.0654	-.0498	.0706	.1527	1.4027
2.010	5.84	10.72	7.58	3.35	.2936	.0650	-.0541	-.0566	.2033	.1168
2.010	5.96	10.72	4.22	2.11	.2988	.0669	-.0490	-.1071	.1397	.5478
2.010	5.95	10.83	2.54	2.08	.2888	.0657	-.0463	-.0037	.1237	1.4885
2.010	5.93	10.86	1.70	2.09	.2822	.0648	-.0452	.0573	.1372	1.9784
2.010	5.90	10.96	0.87	2.04	.2738	.0635	-.0443	.1566	.1643	2.2431
2.010	5.86	10.98	0.02	2.02	.2656	.0621	-.0438	.2714	.1955	2.0576
2.010	5.92	5.70	0.01	2.11	.2733	.0637	-.0430	-.2831	.0748	1.7788
2.010	5.96	5.67	0.85	2.12	.2816	.0651	-.0437	-.2952	.0817	1.4904
2.010	5.99	5.67	1.68	2.12	.2914	.0666	-.0451	-.3014	.1006	1.1226
2.010	6.00	5.62	2.51	2.13	.2975	.0673	-.0466	-.3188	.1050	.6668
2.010	5.99	5.51	4.19	2.16	.3049	.0680	-.0499	-.3214	.1257	-.3155
2.010	5.82	5.53	7.55	3.38	.2965	.0652	-.0562	-.1925	.1775	-.7658
2.010	5.90	5.63	4.20	3.38	.2971	.0660	-.0518	-.2288	.1296	.5503
2.010	5.97	5.73	1.68	3.36	.2927	.0663	-.0465	-.2703	.0844	1.6372
2.010	5.96	5.76	0.01	3.36	.2815	.0651	-.0435	-.1854	.0704	1.9685
2.010	5.95	5.82	0.02	5.00	.2871	.0654	-.0458	.0535	.1451	1.3508
2.010	5.93	5.82	0.85	5.01	.2893	.0654	-.0476	-.0450	.1239	1.7002
2.010	5.89	5.82	2.52	5.00	.2918	.0653	-.0506	-.1485	.1002	1.8356
2.010	5.85	5.74	4.20	5.02	.2918	.0648	-.0527	-.1923	.1097	1.3404
2.010	5.79	5.64	7.55	5.03	.2852	.0631	-.0540	-.1883	.1341	.2785
2.010	5.85	5.83	7.55	10.02	.2779	.0631	-.0486	.0649	.1589	1.4091
2.010	5.84	5.79	4.20	10.03	.2763	.0628	-.0486	.2138	.2164	.8303
2.010	5.81	5.84	0.85	10.00	.2824	.0631	-.0521	.2399	.2178	.7772
2.010	5.85	0.66	0.84	15.05	.2776	.0631	-.0485	-.0026	.1693	.1083
2.010	5.80	0.69	0.84	10.02	.2825	.0631	-.0526	-.0097	.1573	.2179
2.010	5.84	0.71	4.20	10.00	.2776	.0630	-.0489	-.0226	.1573	.1752
2.010	5.84	0.71	7.55	10.01	.2756	.0628	-.0482	-.1893	.1263	.7884
2.010	5.78	0.50	7.55	5.05	.2873	.0631	-.0555	-.3386	.1582	-.4935
2.010	5.83	0.58	4.20	5.05	.2954	.0651	-.0551	-.3169	.1418	.2383
2.010	5.88	0.62	2.54	5.05	.2960	.0658	-.0526	-.3332	.1114	.8270
2.010	5.94	0.64	0.84	5.05	.2947	.0662	-.0487	-.2689	.1007	1.0251
2.010	5.97	0.65	0.01	5.05	.2927	.0664	-.0466	-.2023	.1062	.8384
2.010	6.01	0.60	0.01	3.39	.2882	.0664	-.0431	-.4001	.0982	1.0757
2.010	5.99	0.55	1.70	3.40	.3007	.0673	-.0479	-.4303	.1376	.5916
2.010	5.90	0.45	4.20	3.42	.3034	.0669	-.0542	-.4118	.1797	-.3513
2.010	5.79	0.37	7.55	3.42	.2987	.0651	-.0586	-.3664	.2120	-1.4091
2.010	6.00	0.38	4.20	2.18	.3124	.0687	-.0515	-.5666	.2124	-.7562
2.010	6.06	0.48	2.54	2.16	.3066	.0688	-.0462	-.5788	.1835	.1699
2.010	6.06	0.49	1.70	2.16	.2988	.0682	-.0435	-.5670	.1519	.4437
2.010	6.05	0.52	0.84	2.15	.2896	.0670	-.0411	-.5153	.1274	.5990
2.010	6.01	0.56	0.01	2.13	.2798	.0653	-.0400	-.4572	.1066	.7527
2.010	5.75	-4.77	7.55	3.44	.3040	.0651	-.0625	-.8168	.3054	-1.4965
2.010	5.89	-4.65	4.20	3.46	.3132	.0676	-.0580	-.8529	.2843	-.1654
2.010	5.99	-4.48	-0.01	5.07	.2997	.0672	-.0477	-.4193	.1515	.1931
2.010	5.95	-4.51	0.83	5.09	.3011	.0671	-.0505	-.4646	.1624	.2516
2.010	5.87	-4.54	2.51	5.09	.3025	.0665	-.0551	-.5208	.1879	.0825
2.010	5.81	-4.58	4.19	5.09	.2994	.0652	-.0578	-.6022	.2230	-.0950
2.010	5.76	-4.63	7.55	5.07	.2885	.0628	-.0566	-.6752	.2493	-.7213
2.010	5.84	-4.49	7.55	10.06	.2764	.0628	-.0483	-.3425	.1817	-.1959
2.010	5.83	-4.47	4.19	10.05	.2772	.0628	-.0490	-.2428	.1781	-.4379
2.010	5.80	-4.43	0.83	10.02	.2823	.0628	-.0527	-.1810	.2032	-.5927
2.010	5.84	-4.45	0.83	15.05	.2765	.0629	-.0483	-.1733	.2079	-.7333
2.010	5.75	-7.78	7.56	5.13	.2883	.0628	-.0574	-1.0651	.3597	-.5626
2.010	5.79	-7.67	4.19	5.14	.3026	.0655	-.0601	-.9093	.3168	.0244
2.010	5.86	-7.56	2.51	5.11	.3084	.0672	-.0577	-.7830	.2756	.0663
2.010	5.96	-7.57	0.83	5.13	.3091	.0683	-.0528	-.6756	.2369	.0212
2.010	6.00	-7.59	0.00	5.14	.3062	.0682	-.0496	-.6305	.2265	-.0217
2.010	5.84	-9.62	0.83	15.10	.2763	.0629	-.0482	-.5279	.3229	-1.2266
2.010	5.79	-9.66	0.83	10.13	.2820	.0626	-.0531	-.5363	.3137	-1.1472
2.010	5.83	-9.69	4.19	10.15	.2773	.0627	-.0491	-.6010	.2901	-.9308
2.010	5.84	-9.74	7.55	10.17	.2762	.0628	-.0483	-.7488	.3308	-.6133

TABLE III.- AERODYNAMIC CHARACTERISTICS OF RETURN COMPONENT AND BOMB POD LESS FINS WITH MUTUAL INTERFERENCE; $\beta_P = 0^o$; $\beta_R = 0^o$ - Concluded

M	α_R, deg	α_P, deg	x_a, in.	z_a, in.	$C_{L,R}$	$C_{D,R}$	$C_{m,R}$	$C_{L,P}$	$C_{D,P}$	$C_{m,P}$
2.010	6.08	3.95	2.51	1.26	.2959	.0680	-.0413	-.4366	.1385	-.1467
2.010	6.04	3.98	1.67	1.26	.2872	.0666	-.0406	-.4180	.1081	.4024
2.010	5.99	4.08	0.84	1.21	.2776	.0648	-.0405	-.3672	.0968	.8042
2.010	5.93	4.13	-0.01	1.19	.2689	.0632	-.0409	-.3281	.0809	1.0550
2.010	5.90	6.14	0.00	0.52	.2653	.0625	-.0416	-.2674	.0733	1.0246
2.010	6.01	6.12	1.68	0.50	.2795	.0651	-.0400	-.2988	.1130	.0164
2.010	6.05	6.03	2.51	1.23	.2931	.0674	-.0422	-.3455	.1153	.1363
2.010	6.01	6.11	1.68	1.20	.2853	.0659	-.0418	-.3332	.0898	.7185
2.010	5.96	6.15	0.84	1.19	.2751	.0643	-.0415	-.2888	.0804	1.1684
2.010	5.90	6.18	0.00	1.19	.2678	.0628	-.0419	-.2440	.0733	1.5259
2.010	5.86	9.34	0.01	1.14	.2654	.0622	-.0435	-.0617	.0908	2.0777
2.010	5.91	9.31	0.86	1.14	.2721	.0633	-.0433	-.1388	.0890	1.6983
2.010	5.95	9.21	1.69	1.18	.2810	.0649	-.0435	-.1887	.0887	1.2189
2.010	6.00	9.14	2.55	1.21	.2900	.0665	-.0439	-.2399	.0983	.6781

TABLE IV.- AERODYNAMIC CHARACTERISTICS OF RETURN COMPONENT IN PRESENCE OF BOMB POD;

$\beta_P = 4^o$; $\beta_R = 2^o$

M	α_R, deg	β_R, deg	x_a, in.	z_a, in.	$C_{L,R}$	$C_{D,R}$	$C_{m,R}$	$C_{l,R}$	$C_{n,R}$	$C_{Y,R}$
1.570	-0.27	-1.98	1.71	2.01	.0428	.0334	.0132	.0037	-.0070	.0231
1.570	-0.11	-1.99	4.22	2.06	.0693	.0348	.0117	.0041	-.0066	.0233
1.570	-0.28	-2.01	7.57	3.31	.0739	.0335	.0024	.0038	-.0064	.0249
1.570	-0.36	-2.01	7.57	5.02	.0674	.0330	.0010	.0032	-.0065	.0249
1.570	-0.23	-2.01	4.22	5.00	.0683	.0338	.0064	.0042	-.0064	.0248
1.570	-0.25	-2.00	0.00	4.97	.0504	.0337	.0115	.0033	-.0069	.0245
1.570	-0.21	-2.00	0.84	4.97	.0584	.0339	.0109	.0035	-.0069	.0244
1.570	-0.23	-2.01	4.20	4.99	.0711	.0338	.0056	.0042	-.0064	.0249
1.570	-0.36	-2.01	7.56	4.98	.0684	.0329	.0003	.0032	-.0065	.0249
1.570	-0.29	-2.01	7.56	3.32	.0732	.0335	.0022	.0038	-.0064	.0248
1.570	-0.09	-2.00	4.20	2.08	.0725	.0350	.0114	.0041	-.0065	.0235
1.570	-0.24	-1.98	1.68	2.04	.0463	.0334	.0132	.0036	-.0070	.0234
1.570	-0.37	-1.99	0.00	2.00	.0331	.0327	.0116	.0036	-.0069	.0241
1.570	-0.31	-2.00	-0.01	2.08	.0366	.0330	.0133	.0033	-.0068	.0244
1.570	-0.18	-1.99	1.66	2.10	.0522	.0341	.0141	.0034	-.0070	.0239
1.570	-0.05	-2.00	4.17	2.12	.0783	.0353	.0114	.0040	-.0064	.0236
1.570	-0.30	-2.01	7.52	3.38	.0772	.0336	.0004	.0037	-.0064	.0249
1.570	-0.38	-2.01	7.53	5.01	.0694	.0327	-.0009	.0031	-.0065	.0251
1.570	-0.23	-2.01	4.17	5.04	.0744	.0338	.0043	.0041	-.0064	.0248
1.570	-0.16	-2.00	0.82	5.02	.0640	.0343	.0111	.0034	-.0068	.0244
1.570	-0.18	-2.00	-0.01	5.01	.0582	.0343	.0119	.0033	-.0069	.0244
1.570	-0.33	-2.01	0.82	10.03	.0684	.0331	.0019	.0036	-.0065	.0250
1.570	-0.39	-2.01	4.17	10.02	.0598	.0323	.0016	.0027	-.0067	.0252
1.570	-0.34	-2.01	7.52	15.05	.0454	.0278	.0056	.0026	-.0057	.0216
1.570	-0.34	-2.01	4.18	15.05	.0527	.0328	.0062	.0029	-.0066	.0248
1.570	-0.35	-2.01	0.82	15.05	.0526	.0325	.0058	.0029	-.0066	.0248
1.570	-0.35	-2.01	7.52	10.03	.0523	.0325	.0059	.0030	-.0065	.0248
1.570	-0.41	-2.01	4.18	10.02	.0591	.0321	.0012	.0028	-.0067	.0251
1.570	-0.35	-2.01	0.82	10.05	.0707	.0330	.0000	.0034	-.0065	.0250
1.570	-0.13	-2.00	-0.02	5.06	.0636	.0342	.0123	.0033	-.0068	.0245
1.570	-0.12	-2.00	0.82	5.06	.0690	.0345	.0112	.0035	-.0067	.0244
1.570	-0.23	-2.01	4.18	5.06	.0794	.0337	.0024	.0041	-.0063	.0246
1.570	-0.40	-2.01	7.52	5.05	.0726	.0323	-.0029	.0030	-.0066	.0250
1.570	-0.32	-2.01	7.52	3.40	.0805	.0332	-.0018	.0036	-.0064	.0248
1.570	0.02	-2.00	4.18	2.18	.0883	.0352	.0109	.0042	-.0063	.0236
1.570	-0.07	-1.99	1.67	2.12	.0636	.0344	.0148	.0034	-.0068	.0238
1.570	-0.24	-2.00	-0.01	2.11	.0445	.0331	.0137	.0032	-.0067	.0243
1.570	-0.20	-2.00	-0.03	2.16	.0463	.0334	.0146	.0034	-.0067	.0243
1.570	0.01	-1.99	1.65	2.20	.0710	.0351	.0163	.0036	-.0069	.0237
1.570	0.06	-2.01	4.17	2.23	.0954	.0359	.0104	.0046	-.0061	.0237
1.570	-0.34	-2.01	7.52	3.43	.0851	.0332	-.0045	.0035	-.0064	.0248
1.570	-0.43	-2.01	7.53	5.11	.0746	.0320	-.0049	.0030	-.0066	.0251
1.570	-0.24	-2.01	4.17	5.12	.0845	.0336	.0003	.0040	-.0063	.0247
1.570	-0.06	-2.01	0.81	5.13	.0775	.0348	.0110	.0038	-.0065	.0244
1.570	-0.07	-2.00	-0.03	5.11	.0720	.0348	.0125	.0036	-.0068	.0244
1.570	-0.37	-2.01	0.81	10.09	.0733	.0329	-.0018	.0033	-.0066	.0250
1.570	-0.42	-2.01	4.17	10.09	.0575	.0319	.0011	.0028	-.0067	.0251
1.570	-0.36	-2.01	7.53	10.07	.0514	.0325	.0060	.0030	-.0065	.0248
1.570	-0.35	-2.01	0.81	15.09	.0523	.0325	.0059	.0029	-.0066	.0248
1.570	-0.35	-2.01	4.17	15.10	.0507	.0327	.0066	.0030	-.0065	.0248
1.570	-0.35	-2.01	7.52	15.10	.0507	.0326	.0067	.0029	-.0065	.0247
1.570	-0.45	-2.01	7.53	5.15	.0738	.0319	-.0058	.0030	-.0068	.0254
1.570	-0.26	-2.02	4.17	5.16	.0873	.0335	-.0014	.0041	-.0063	.0248
1.570	-0.03	-2.01	0.81	5.18	.0827	.0351	.0105	.0042	-.0065	.0246
1.570	-0.04	-2.00	-0.01	5.38	.0788	.0350	.0113	.0039	-.0067	.0245
1.570	-0.35	-2.01	7.53	15.16	.0514	.0327	.0065	.0030	-.0065	.0248
1.570	-0.35	-2.01	4.17	15.16	.0510	.0324	.0065	.0029	-.0065	.0247
1.570	-0.35	-2.01	0.81	15.14	.0527	.0325	.0057	.0030	-.0066	.0248
1.570	-0.36	-2.01	7.53	10.18	.0508	.0325	.0058	.0030	-.0065	.0247
1.570	-0.43	-2.00	4.17	10.18	.0566	.0318	.0009	.0028	-.0068	.0251
1.570	-0.40	-2.01	0.81	10.18	.0771	.0327	-.0044	.0031	-.0066	.0252
1.570	-0.33	-2.00	-0.02	0.50	.0342	.0325	.0131	.0033	-.0066	.0244
1.570	-0.15	-1.99	1.65	0.54	.0463	.0335	.0170	.0035	-.0068	.0239
1.570	-0.02	-1.99	2.46	1.24	.0629	.0349	.0176	.0036	-.0070	.0239
1.570	-0.33	-2.00	-0.03	0.51	.0332	.0326	.0133	.0032	-.0066	.0243
1.570	-0.17	-1.99	1.65	0.53	.0447	.0334	.0169	.0034	-.0068	.0239
1.570	-0.03	-1.99	2.50	1.21	.0635	.0349	.0171	.0036	-.0070	.0239
1.570	-0.33	-2.00	-0.01	0.48	.0320	.0327	.0135	.0033	-.0066	.0242
1.570	-0.18	-1.99	1.66	0.49	.0447	.0334	.0165	.0034	-.0069	.0239
1.570	-0.05	-1.99	2.46	1.23	.0623	.0348	.0166	.0035	-.0071	.0239
1.570	5.34	-2.02	1.70	2.04	.3094	.0673	-.0440	.0034	-.0068	.0258
1.570	5.55	-2.02	4.21	2.10	.3231	.0702	-.0407	.0037	-.0066	.0249
1.570	5.43	-2.04	7.57	3.34	.3431	.0717	-.0511	.0044	-.0064	.0268
1.570	5.41	-2.03	4.21	4.31	.3341	.0705	-.0487	.0040	-.0066	.0266
1.570	5.39	-2.03	4.22	5.00	.3310	.0698	-.0489	.0041	-.0066	.0267
1.570	5.32	-2.02	0.00	4.97	.3067	.0657	-.0451	.0033	-.0068	.0259
1.570	5.35	-2.02	0.83	4.99	.3115	.0667	-.0453	.0033	-.0068	.0259
1.570	5.39	-2.03	4.19	5.02	.3262	.0683	-.0485	.0039	-.0064	.0259
1.570	5.27	-2.04	7.55	5.01	.3313	.0680	-.0554	.0038	-.0064	.0263
1.570	5.41	-2.04	7.56	3.34	.3335	.0694	-.0499	.0043	-.0062	.0261

TABLE IV.- AERODYNAMIC CHARACTERISTICS OF RETURN COMPONENT IN PRESENCE OF BOMB POD;

$\beta_P = 4^o$; $\beta_R = 2^o$ - Continued

M	α_R, deg	β_R, deg	x_a, in.	z_a, in.	$C_{L,R}$	$C_{D,R}$	$C_{m,R}$	$C_{l,R}$	$C_{n,R}$	$C_{Y,R}$
1.570	5.56	-2.02	4.20	2.08	.3230	.0701	-.0397	.0037	-.0066	.0250
1.570	5.37	-2.02	1.68	2.06	.3041	.0659	-.0422	.0033	-.0066	.0251
1.570	5.25	-2.03	0.00	2.02	.2931	.0636	-.0437	.0032	-.0065	.0258
1.570	5.30	-2.03	-0.02	2.09	.2952	.0642	-.0425	.0030	-.0066	.0265
1.570	5.44	-2.02	1.65	2.12	.3078	.0671	-.0401	.0032	-.0069	.0261
1.570	5.62	-2.02	4.17	2.14	.3310	.0716	-.0395	.0038	-.0065	.0249
1.570	5.41	-2.04	7.52	3.39	.3400	.0702	-.0522	.0043	-.0062	.0260
1.570	5.25	-2.04	7.52	5.04	.3345	.0680	-.0574	.0036	-.0065	.0265
1.570	5.40	-2.04	4.17	5.04	.3301	.0688	-.0493	.0040	-.0063	.0261
1.570	5.40	-2.02	0.82	5.01	.3164	.0676	-.0448	.0033	-.0067	.0258
1.570	5.37	-2.02	-0.01	5.00	.3114	.0668	-.0444	.0031	-.0066	.0259
1.570	5.18	-2.03	4.17	10.03	.3217	.0657	-.0564	.0032	-.0066	.0265
1.570	5.22	-2.03	7.52	10.03	.3130	.0650	-.0517	.0029	-.0068	.0266
1.570	5.25	-2.03	7.52	15.06	.3106	.0653	-.0498	.0029	-.0066	.0265
1.570	5.24	-2.03	4.18	15.05	.3111	.0651	-.0503	.0029	-.0066	.0264
1.570	5.22	-2.03	1.22	15.05	.3152	.0655	-.0526	.0028	-.0068	.0269
1.570	5.23	-2.03	7.52	10.04	.3130	.0651	-.0513	.0030	-.0069	.0267
1.570	5.17	-2.03	4.18	10.04	.3231	.0657	-.0576	.0029	-.0067	.0268
1.570	5.31	-2.04	0.82	10.04	.3268	.0679	-.0523	.0036	-.0064	.0262
1.570	5.41	-2.02	-0.02	5.05	.3159	.0678	-.0439	.0033	-.0068	.0262
1.570	5.44	-2.03	0.82	5.06	.3211	.0687	-.0445	.0033	-.0067	.0259
1.570	5.22	-2.03	7.52	5.07	.3365	.0680	-.0597	.0036	-.0066	.0265
1.570	5.40	-2.04	4.18	5.07	.3333	.0691	-.0502	.0041	-.0063	.0264
1.570	5.39	-2.04	7.52	3.43	.3435	.0706	-.0542	.0041	-.0061	.0261
1.570	5.68	-2.03	4.18	2.17	.3354	.0727	-.0383	.0042	-.0066	.0254
1.570	5.52	-2.02	1.67	2.15	.3155	.0683	-.0392	.0037	-.0071	.0261
1.570	5.32	-2.03	-0.01	2.13	.3028	.0651	-.0436	.0032	-.0068	.0266
1.570	5.36	-2.04	7.53	3.45	.3496	.0709	-.0577	.0042	-.0063	.0264
1.570	5.18	-2.03	7.53	5.13	.3411	.0678	-.0630	.0037	-.0067	.0267
1.570	5.39	-2.04	4.17	5.15	.3390	.0696	-.0525	.0042	-.0064	.0264
1.570	5.49	-2.02	0.81	5.14	.3285	.0698	-.0446	.0036	-.0068	.0261
1.570	5.45	-2.02	-0.03	5.10	.3234	.0688	-.0446	.0034	-.0070	.0263
1.570	5.30	-2.04	0.81	10.08	.3331	.0685	-.0547	.0038	-.0064	.0263
1.570	5.15	-2.03	4.17	10.08	.3250	.0655	-.0589	.0028	-.0067	.0268
1.570	5.24	-2.03	7.53	10.08	.3125	.0651	-.0509	.0030	-.0068	.0267
1.570	5.21	-2.03	0.81	15.10	.3151	.0651	-.0531	.0028	-.0068	.0268
1.570	5.24	-2.03	4.17	15.08	.3131	.0652	-.0507	.0030	-.0066	.0265
1.570	5.24	-2.03	4.17	15.08	.3119	.0652	-.0504	.0029	-.0066	.0265
1.570	5.25	-2.03	7.53	15.11	.3111	.0655	-.0499	.0029	-.0066	.0264
1.570	5.48	-2.03	-0.02	5.18	.3290	.0696	-.0454	.0037	-.0068	.0262
1.570	5.51	-2.02	0.81	5.18	.3338	.0708	-.0455	.0037	-.0069	.0263
1.570	5.40	-2.04	4.17	5.19	.3460	.0705	-.0545	.0044	-.0064	.0264
1.570	5.15	-2.03	7.53	5.17	.3443	.0676	-.0655	.0035	-.0069	.0269
1.570	5.25	-2.03	7.53	15.15	.3107	.0654	-.0498	.0029	-.0066	.0264
1.570	5.24	-2.03	4.17	15.14	.3114	.0651	-.0504	.0029	-.0066	.0264
1.570	5.21	-2.03	0.81	15.14	.3146	.0652	-.0529	.0027	-.0069	.0267
1.570	5.23	-2.03	7.54	10.19	.3121	.0652	-.0508	.0030	-.0068	.0266
1.570	5.13	-2.03	4.17	10.19	.3261	.0654	-.0602	.0026	-.0069	.0271
1.570	5.27	-2.04	0.82	10.20	.3361	.0684	-.0572	.0037	-.0064	.0266
1.570	5.24	-2.02	-0.03	0.47	.2920	.0636	-.0438	.0030	-.0067	.0259
1.570	5.39	-2.02	1.65	0.51	.2997	.0653	-.0398	.0034	-.0067	.0253
1.570	5.50	-2.01	2.49	1.19	.3101	.0678	-.0379	.0034	-.0071	.0256
1.570	5.23	-2.02	-0.03	0.49	.2884	.0632	-.0431	.0030	-.0067	.0258
1.570	5.38	-2.02	1.66	0.49	.2992	.0652	-.0398	.0034	-.0068	.0252
1.570	5.49	-2.01	2.49	1.20	.3097	.0676	-.0384	.0034	-.0071	.0255
1.570	5.24	-2.02	-0.02	0.50	.2890	.0634	-.0430	.0030	-.0067	.0255
1.570	5.38	-2.02	1.66	0.50	.2977	.0651	-.0395	.0033	-.0068	.0254
1.570	5.47	-2.01	2.48	1.21	.3085	.0674	-.0387	.0033	-.0071	.0255
1.570	-0.28	2.08	1.71	2.00	.0419	.0329	.0125	-.0031	.0072	-.0260
1.570	-0.11	2.08	4.22	2.05	.0681	.0346	.0117	-.0032	.0070	-.0256
1.570	-0.27	2.08	7.57	3.32	.0740	.0330	.0022	-.0030	.0071	-.0259
1.570	-0.36	2.08	7.57	5.00	.0681	.0325	.0005	-.0028	.0071	-.0259
1.570	-0.23	2.08	4.22	5.00	.0676	.0333	.0065	-.0032	.0069	-.0258
1.570	-0.25	2.08	0.00	4.96	.0508	.0333	.0110	-.0029	.0072	-.0260
1.570	-0.21	2.08	0.84	4.98	.0567	.0334	.0107	-.0030	.0071	-.0258
1.570	-0.23	2.09	4.20	5.00	.0687	.0333	.0058	-.0032	.0069	-.0259
1.570	-0.36	2.08	7.56	4.98	.0679	.0324	.0002	-.0028	.0070	-.0258
1.570	-0.28	2.08	7.56	3.31	.0755	.0329	.0015	-.0030	.0070	-.0258
1.570	-0.09	2.08	4.20	2.06	.0717	.0347	.0115	-.0032	.0070	-.0257
1.570	-0.25	2.08	1.69	2.04	.0457	.0329	.0126	-.0030	.0072	-.0261
1.570	-0.39	2.08	0.01	1.98	.0317	.0323	.0111	-.0030	.0071	-.0262
1.570	-0.32	2.09	-0.01	2.06	.0361	.0327	.0125	-.0031	.0070	-.0260
1.570	-0.18	2.08	1.66	2.10	.0527	.0335	.0134	-.0031	.0071	-.0260
1.570	-0.05	2.08	4.17	2.12	.0784	.0350	.0112	-.0032	.0069	-.0252
1.570	-0.30	2.08	7.52	3.37	.0772	.0330	-.0001	-.0029	.0070	-.0257
1.570	-0.39	2.08	7.53	5.00	.0680	.0321	-.0010	-.0028	.0071	-.0259
1.570	-0.25	2.08	4.57	5.05	.0736	.0332	.0033	-.0031	.0069	-.0257
1.570	-0.17	2.08	0.82	5.01	.0616	.0338	.0111	-.0031	.0071	-.0257
1.570	-0.20	2.08	-0.01	5.00	.0567	.0336	.0115	-.0029	.0072	-.0258
1.570	-0.33	2.08	0.82	10.01	.0664	.0326	.0020	-.0031	.0070	-.0257

TABLE IV.- AERODYNAMIC CHARACTERISTICS OF RETURN COMPONENT IN PRESENCE OF BOMB POD;

$\beta_P = 4^o$; $\beta_R = 2^o$ - Continued

M	α_R, deg	β_R, deg	x_a, in.	z_a, in.	$C_{L,R}$	$C_{D,R}$	$C_{m,R}$	$C_{l,R}$	$C_{n,R}$	$C_{Y,R}$
1.570	-0.40	2.08	4.17	10.02	.0589	.0317	.0014	-.0028	.0072	-.0259
1.570	-0.35	2.08	7.52	10.02	.0529	.0322	.0057	-.0029	.0071	-.0259
1.570	-0.35	2.08	7.52	15.05	.0514	.0324	.0062	-.0029	.0071	-.0259
1.570	-0.35	2.08	4.18	15.05	.0514	.0321	.0060	-.0029	.0071	-.0260
1.570	-0.36	2.08	0.82	15.07	.0518	.0323	.0056	-.0028	.0072	-.0261
1.570	-0.35	2.08	7.52	10.02	.0533	.0324	.0056	-.0029	.0071	-.0260
1.570	-0.41	2.08	4.18	10.03	.0594	.0317	.0009	-.0028	.0072	-.0259
1.570	-0.35	2.08	0.82	10.05	.0689	.0327	.0003	-.0029	.0071	-.0260
1.570	-0.14	2.08	-0.01	5.06	.0616	.0339	.0124	-.0030	.0071	-.0257
1.570	-0.12	2.08	0.82	5.06	.0685	.0343	.0112	-.0030	.0071	-.0255
1.570	-0.24	2.08	4.18	5.05	.0775	.0334	.0025	-.0032	.0069	-.0256
1.570	-0.41	2.08	7.52	5.05	.0708	.0320	-.0028	-.0029	.0071	-.0257
1.570	-0.32	2.08	7.52	3.40	.0793	.0330	-.0018	-.0029	.0070	-.0256
1.570	0.00	2.08	4.18	2.17	.0837	.0351	.0117	-.0033	.0069	-.0254
1.570	-0.11	2.08	1.67	2.13	.0575	.0340	.0154	-.0032	.0070	-.0257
1.570	-0.26	2.08	-0.01	2.11	.0413	.0328	.0137	-.0031	.0070	-.0261
1.570	-0.35	2.08	7.52	3.42	.0834	.0328	-.0045	-.0028	.0071	-.0258
1.570	-0.20	2.08	-0.03	2.18	.0485	.0332	.0139	-.0030	.0071	-.0261
1.570	0.00	2.08	1.65	2.22	.0685	.0348	.0167	-.0032	.0070	-.0258
1.570	0.05	2.08	4.17	2.22	.0927	.0356	.0111	-.0033	.0066	-.0250
1.570	-0.43	2.08	7.53	5.09	.0725	.0319	-.0046	-.0028	.0071	-.0258
1.570	-0.24	2.08	4.17	5.12	.0849	.0334	.0001	-.0031	.0069	-.0255
1.570	-0.06	2.08	0.81	5.12	.0757	.0345	.0114	-.0033	.0069	-.0254
1.570	-0.08	2.08	-0.03	5.10	.0692	.0343	.0128	-.0031	.0071	-.0255
1.570	-0.37	2.08	0.80	10.08	.0738	.0326	-.0021	-.0029	.0071	-.0259
1.570	-0.36	2.08	7.52	10.06	.0524	.0321	.0056	-.0028	.0071	-.0259
1.570	-0.36	2.08	0.81	15.09	.0524	.0321	.0056	-.0029	.0071	-.0259
1.570	-0.35	2.08	4.56	15.07	.0511	.0323	.0063	-.0029	.0071	-.0259
1.570	-0.35	2.08	7.52	15.09	.0514	.0324	.0063	-.0029	.0071	-.0260
1.570	-0.45	2.08	7.53	5.13	.0743	.0317	-.0059	-.0028	.0071	-.0259
1.570	-0.26	2.08	4.17	5.17	.0866	.0334	-.0014	-.0032	.0069	-.0256
1.570	-0.03	2.08	0.81	5.17	.0810	.0349	.0109	-.0033	.0069	-.0255
1.570	-0.05	2.08	-0.02	5.18	.0770	.0346	.0116	-.0032	.0071	-.0253
1.570	-0.35	2.08	7.53	15.16	.0524	.0323	.0060	-.0028	.0071	-.0259
1.570	-0.35	2.08	4.17	15.15	.0524	.0322	.0061	-.0029	.0071	-.0258
1.570	-0.35	2.08	0.80	15.12	.0531	.0322	.0055	-.0029	.0071	-.0258
1.570	-0.41	2.08	0.81	10.18	.0756	.0325	-.0043	-.0029	.0071	-.0258
1.570	-0.43	2.08	4.17	10.19	.0576	.0314	.0007	-.0027	.0072	-.0261
1.570	-0.36	2.08	7.53	10.18	.0512	.0320	.0057	-.0029	.0071	-.0260
1.570	-0.01	2.08	2.46	1.24	.0648	.0348	.0172	-.0031	.0070	-.0258
1.570	-0.34	2.09	-0.03	0.49	.0319	.0322	.0133	-.0028	.0069	-.0265
1.570	-0.18	2.09	1.65	0.52	.0420	.0331	.0172	-.0030	.0070	-.0263
1.570	-0.03	2.08	2.50	1.19	.0639	.0347	.0169	-.0031	.0070	-.0259
1.570	-0.05	2.08	2.46	1.24	.0643	.0345	.0159	-.0032	.0070	-.0257
1.570	-0.18	2.09	1.66	0.51	.0442	.0331	.0165	-.0030	.0070	-.0262
1.570	-0.33	2.09	-0.01	0.46	.0342	.0324	.0127	-.0028	.0069	-.0265
1.570	5.53	2.09	4.21	2.09	.3214	.0697	-.0403	-.0028	.0063	-.0235
1.570	5.33	2.09	1.70	2.04	.3024	.0650	-.0434	-.0027	.0062	-.0238
1.570	5.43	2.09	7.56	3.35	.3347	.0696	-.0497	-.0028	.0061	-.0237
1.570	5.29	2.09	7.56	5.05	.3310	.0678	-.0548	-.0026	.0062	-.0237
1.570	5.39	2.09	4.22	5.00	.3244	.0680	-.0479	-.0027	.0062	-.0237
1.570	5.31	2.09	0.00	4.97	.3046	.0654	-.0450	-.0024	.0063	-.0235
1.570	5.35	2.09	0.83	5.00	.3110	.0666	-.0454	-.0024	.0064	-.0236
1.570	5.40	2.09	4.19	5.02	.3274	.0685	-.0485	-.0027	.0062	-.0236
1.570	5.29	2.09	7.55	5.02	.3330	.0680	-.0555	-.0025	.0063	-.0238
1.570	5.43	2.10	7.56	3.34	.3367	.0697	-.0502	-.0028	.0060	-.0237
1.570	5.56	2.09	4.20	2.08	.3230	.0700	-.0398	-.0028	.0062	-.0234
1.570	5.35	2.09	1.68	2.03	.3031	.0655	-.0425	-.0025	.0062	-.0236
1.570	5.24	2.10	0.00	2.00	.2923	.0633	-.0439	-.0025	.0060	-.0239
1.570	5.32	2.10	0.38	2.12	.2968	.0646	-.0420	-.0027	.0061	-.0237
1.570	5.44	2.09	1.65	2.12	.3079	.0669	-.0404	-.0028	.0061	-.0237
1.570	5.61	2.09	4.17	2.15	.3277	.0711	-.0388	-.0029	.0061	-.0232
1.570	5.40	2.09	7.51	3.46	.3385	.0699	-.0522	-.0028	.0060	-.0235
1.570	5.26	2.09	7.52	5.04	.3359	.0680	-.0575	-.0027	.0062	-.0236
1.570	5.41	2.09	4.17	5.03	.3312	.0689	-.0494	-.0029	.0061	-.0235
1.570	5.40	2.09	0.82	5.01	.3174	.0673	-.0450	-.0025	.0064	-.0237
1.570	5.37	2.09	-0.01	4.99	.3102	.0664	-.0443	-.0025	.0063	-.0234
1.570	5.33	2.09	0.83	9.98	.3244	.0675	-.0507	-.0028	.0061	-.0234
1.570	5.19	2.09	4.17	10.02	.3225	.0657	-.0564	-.0024	.0064	-.0237
1.570	5.23	2.09	7.52	10.03	.3134	.0650	-.0517	-.0023	.0065	-.0239
1.570	5.25	2.09	7.52	15.05	.3120	.0653	-.0500	-.0025	.0063	-.0239
1.570	5.24	2.09	4.18	15.05	.3107	.0649	-.0502	-.0025	.0063	-.0237
1.570	5.21	2.09	0.82	15.05	.3149	.0650	-.0532	-.0022	.0065	-.0238
1.570	5.23	2.09	7.52	10.03	.3118	.0649	-.0509	-.0024	.0065	-.0240
1.570	5.17	2.09	4.18	10.05	.3233	.0655	-.0576	-.0023	.0064	-.0239
1.570	5.32	2.09	0.82	10.06	.3275	.0679	-.0523	-.0028	.0061	-.0234
1.570	5.41	2.09	-0.01	5.05	.3142	.0672	-.0439	-.0025	.0063	-.0234
1.570	5.43	2.09	0.82	5.06	.3202	.0682	-.0445	-.0026	.0062	-.0233
1.570	5.40	2.09	4.18	5.07	.3325	.0689	-.0501	-.0029	.0060	-.0235
1.570	5.22	2.09	7.52	5.07	.3364	.0677	-.0596	-.0026	.0062	-.0236

TABLE IV.- AERODYNAMIC CHARACTERISTICS OF RETURN COMPONENT IN PRESENCE OF BOMB POD;

$\beta_P = 4^o$; $\beta_R = 2^o$ - Continued

M	α_R, deg	β_R, deg	x_a, in.	z_a, in.	$C_{L,R}$	$C_{D,R}$	$C_{m,R}$	$C_{l,R}$	$C_{n,R}$	$C_{Y,R}$
1.570	5.39	2.10	7.52	3.43	.3433	.0704	-.0541	-.0027	.0060	-.0236
1.570	5.68	2.09	4.18	2.19	.3351	.0725	-.0383	-.0030	.0060	-.0232
1.570	5.51	2.09	1.67	2.15	.3147	.0680	-.0392	-.0029	.0061	-.0233
1.570	5.32	2.09	-0.01	2.15	.3026	.0650	-.0439	-.0026	.0062	-.0238
1.570	5.37	2.09	7.53	3.45	.3502	.0710	-.0575	-.0027	.0061	-.0236
1.570	5.18	2.09	7.53	5.13	.3410	.0678	-.0629	-.0026	.0063	-.0237
1.570	5.40	2.09	4.17	5.13	.3396	.0696	-.0526	-.0028	.0060	-.0233
1.570	5.49	2.09	0.81	5.12	.3290	.0697	-.0446	-.0027	.0062	-.0232
1.570	5.45	2.09	-0.03	5.10	.3222	.0685	-.0446	-.0026	.0063	-.0234
1.570	5.30	2.09	0.81	10.07	.3309	.0682	-.0542	-.0027	.0062	-.0236
1.570	5.15	2.09	4.17	10.07	.3242	.0652	-.0587	-.0023	.0064	-.0237
1.570	5.24	2.08	7.53	10.07	.3119	.0649	-.0507	-.0024	.0066	-.0239
1.570	5.25	2.09	7.53	15.11	.3114	.0652	-.0498	-.0025	.0063	-.0235
1.570	5.24	2.09	4.16	15.08	.3105	.0649	-.0502	-.0025	.0063	-.0236
1.570	5.20	2.08	0.81	15.08	.3133	.0648	-.0529	-.0022	.0065	-.0238
1.570	5.48	2.09	-0.02	5.18	.3291	.0693	-.0454	-.0026	.0062	-.0233
1.570	5.51	2.09	0.81	5.18	.3338	.0706	-.0455	-.0026	.0063	-.0234
1.570	5.40	2.10	4.17	5.20	.3458	.0703	-.0545	-.0029	.0059	-.0232
1.570	5.16	2.09	7.53	5.19	.3452	.0678	-.0654	-.0025	.0064	-.0237
1.570	5.21	2.08	0.80	15.12	.3134	.0647	-.0525	-.0022	.0065	-.0239
1.570	5.24	2.09	4.17	15.15	.3113	.0650	-.0504	-.0024	.0063	-.0238
1.570	5.25	2.09	7.53	15.17	.3119	.0654	-.0499	-.0025	.0063	-.0236
1.570	5.24	2.08	7.54	10.19	.3129	.0652	-.0508	-.0024	.0065	-.0237
1.570	5.13	2.09	4.17	10.19	.3257	.0651	-.0601	-.0021	.0063	-.0238
1.570	5.28	2.09	0.81	10.19	.3381	.0686	-.0573	-.0027	.0061	-.0236
1.570	5.24	2.09	-0.03	0.49	.2916	.0632	-.0436	-.0025	.0062	-.0238
1.570	5.38	2.09	1.65	0.51	.2990	.0650	-.0399	-.0028	.0061	-.0236
1.570	5.50	2.09	2.49	1.18	.3087	.0674	-.0378	-.0028	.0061	-.0232
1.570	5.23	2.09	-0.03	0.49	.2892	.0629	-.0433	-.0025	.0063	-.0239
1.570	5.37	2.10	1.66	0.48	.2956	.0644	-.0394	-.0029	.0060	-.0236
1.570	5.49	2.09	2.49	1.19	.3092	.0674	-.0384	-.0028	.0061	-.0233
1.570	5.51	2.09	2.89	1.24	.3135	.0682	-.0388	-.0028	.0061	-.0231
1.570	5.37	2.09	1.66	0.50	.2957	.0645	-.0394	-.0028	.0061	-.0236
1.570	5.23	2.09	-0.03	0.52	.2880	.0630	-.0431	-.0025	.0062	-.0238
2.010	0.17	-1.97	1.71	2.04	.0749	.0326	-.0020	.0026	-.0053	.0196
2.010	0.18	-2.00	4.22	2.05	.0830	.0324	-.0041	.0023	-.0051	.0233
2.010	0.09	-1.99	7.57	3.32	.0802	.0316	-.0080	.0012	-.0057	.0239
2.010	0.08	-1.99	7.57	5.00	.0753	.0312	-.0074	.0011	-.0058	.0239
2.010	0.11	-2.00	4.22	4.99	.0790	.0317	-.0067	.0013	-.0055	.0239
2.010	0.18	-1.99	0.00	4.98	.0790	.0321	-.0031	.0022	-.0053	.0229
2.010	0.17	-2.00	0.84	4.99	.0810	.0320	-.0042	.0022	-.0053	.0231
2.010	0.11	-1.99	4.20	4.97	.0800	.0317	-.0073	.0013	-.0056	.0238
2.010	0.07	-1.99	7.56	4.98	.0760	.0313	-.0077	.0011	-.0058	.0240
2.010	0.09	-1.99	7.56	3.31	.0912	.0315	-.0085	.0012	-.0058	.0241
2.010	0.19	-2.00	4.20	2.06	.0855	.0324	-.0046	.0023	-.0051	.0238
2.010	0.19	-1.97	1.67	2.04	.0785	.0326	-.0023	.0025	-.0054	.0202
2.010	0.13	-1.96	0.01	2.00	.0676	.0323	-.0016	.0024	-.0058	.0200
2.010	0.09	-1.99	7.56	3.31	.0801	.0315	-.0083	.0012	-.0057	.0239
2.010	0.18	-1.97	-0.01	2.11	.0740	.0325	-.0010	.0024	-.0058	.0215
2.010	0.23	-1.98	1.65	2.13	.0853	.0330	-.0021	.0024	-.0054	.0215
2.010	0.19	-2.00	4.17	2.12	.0899	.0325	-.0056	.0023	-.0052	.0234
2.010	0.07	-1.99	7.52	3.37	.0827	.0315	-.0098	.0012	-.0058	.0241
2.010	0.06	-1.99	7.53	4.99	.0751	.0311	-.0081	.0011	-.0058	.0238
2.010	0.09	-1.99	4.17	5.02	.0816	.0317	-.0085	.0012	-.0056	.0239
2.010	0.16	-2.00	0.82	5.01	.0838	.0323	-.0053	.0020	-.0054	.0235
2.010	0.18	-2.00	-0.01	5.02	.0830	.0324	-.0040	.0022	-.0054	.0234
2.010	0.07	-1.99	0.82	10.01	.0720	.0313	-.0064	.0011	-.0058	.0237
2.010	0.09	-1.99	4.17	10.02	.0705	.0313	-.0050	.0011	-.0057	.0236
2.010	0.10	-1.99	7.52	10.03	.0704	.0314	-.0046	.0011	-.0057	.0236
2.010	0.09	-1.99	7.52	15.06	.0706	.0315	-.0047	.0011	-.0057	.0237
2.010	0.09	-1.99	7.52	10.02	.0695	.0315	-.0045	.0011	-.0057	.0236
2.010	0.09	-1.99	4.18	10.02	.0699	.0313	-.0049	.0011	-.0057	.0236
2.010	0.08	-1.99	0.82	10.04	.0722	.0314	-.0061	.0011	-.0057	.0236
2.010	0.19	-2.00	-0.02	5.06	.0873	.0327	-.0051	.0021	-.0054	.0236
2.010	0.16	-2.00	0.82	5.05	.0886	.0325	-.0069	.0020	-.0054	.0236
2.010	0.07	-1.99	4.18	5.04	.0837	.0316	-.0103	.0011	-.0057	.0238
2.010	0.05	-1.99	7.52	5.03	.0746	.0312	-.0083	.0011	-.0058	.0239
2.010	0.05	-1.99	7.52	3.40	.0849	.0314	-.0115	.0012	-.0059	.0240
2.010	0.20	-2.00	4.18	2.15	.0960	.0329	-.0070	.0020	-.0053	.0237
2.010	0.27	-1.98	1.67	2.16	.0923	.0334	-.0022	.0024	-.0054	.0220
2.010	0.24	-1.97	-0.02	2.14	.0803	.0333	-.0000	.0023	-.0059	.0215
2.010	0.31	-1.97	-0.03	2.20	.0933	.0342	-.0001	.0027	-.0058	.0218
2.010	0.31	-1.99	1.65	2.24	.1034	.0340	-.0039	.0028	-.0053	.0221
2.010	0.21	-2.00	4.17	2.19	.1044	.0331	-.0095	.0023	-.0052	.0239
2.010	0.03	-1.99	7.53	3.41	.0857	.0312	-.0133	.0011	-.0060	.0242
2.010	0.05	-1.99	7.53	5.08	.0746	.0311	-.0084	.0011	-.0058	.0239
2.010	0.05	-1.99	4.17	5.09	.0871	.0315	-.0125	.0010	-.0059	.0243
2.010	0.16	-2.00	0.81	5.10	.0950	.0326	-.0092	.0018	-.0053	.0237
2.010	0.19	-2.00	-0.03	5.09	.0949	.0329	-.0073	.0021	-.0053	.0236
2.010	0.08	-1.99	0.81	10.05	.0714	.0313	-.0058	.0011	-.0057	.0236

TABLE IV.- AERODYNAMIC CHARACTERISTICS OF RETURN COMPONENT IN PRESENCE OF BOMB POD;

$\beta_P = 4^o$; $\beta_R = 2^o$ - Concluded

M	α_R, deg	β_R, deg	x_a, in.	z_a, in.	$C_{L,R}$	$C_{D,R}$	$C_{m,R}$	$C_{l,R}$	$C_{n,R}$	$C_{Y,R}$
2.010	0.09	-1.99	4.16	10.06	.0718	.0315	-.0052	.0011	-.0057	.0236
2.010	0.09	-1.99	7.52	10.07	.0702	.0317	-.0046	.0011	-.0057	.0235
2.010	0.10	-1.99	7.52	15.09	.0709	.0317	-.0047	.0011	-.0057	.0235
2.010	0.19	-2.00	-0.03	5.16	.1011	.0331	-.0094	.0021	-.0053	.0238
2.010	0.15	-2.00	0.81	5.15	.1001	.0327	-.0115	.0018	-.0053	.0237
2.010	0.03	-1.99	4.17	5.14	.0892	.0312	-.0141	.0010	-.0059	.0241
2.010	0.05	-1.99	7.53	5.13	.0755	.0312	-.0086	.0011	-.0058	.0239
2.010	0.10	-1.99	7.52	15.14	.0703	.0316	-.0046	.0011	-.0057	.0237
2.010	0.10	-1.99	7.53	10.17	.0711	.0317	-.0048	.0011	-.0057	.0234
2.010	0.09	-1.99	4.17	10.17	.0704	.0313	-.0049	.0011	-.0057	.0235
2.010	0.08	-1.99	0.81	10.14	.0720	.0314	-.0059	.0011	-.0057	.0236
2.010	0.20	-1.97	-0.02	0.52	.0709	.0325	.0009	.0025	-.0059	.0212
2.010	0.33	-1.97	1.65	0.58	.0855	.0337	.0030	.0027	-.0057	.0211
2.010	0.33	-1.98	2.46	1.26	.0988	.0341	-.0010	.0027	-.0054	.0213
2.010	0.18	-1.97	-0.03	0.53	.0694	.0323	.0006	.0025	-.0059	.0209
2.010	0.31	-1.97	1.65	0.56	.0836	.0335	.0028	.0026	-.0057	.0210
2.010	0.33	-1.98	2.50	1.23	.0980	.0340	-.0011	.0026	-.0054	.0212
2.010	0.31	-1.98	2.46	1.26	.0954	.0339	-.0011	.0025	-.0054	.0213
2.010	0.29	-1.97	1.66	0.53	.0826	.0334	.0022	.0026	-.0057	.0210
2.010	0.17	-1.97	-0.01	0.52	.0679	.0325	.0004	.0024	-.0059	.0210
2.010	5.93	-1.99	1.70	2.04	.2800	.0645	-.0454	.0019	-.0049	.0211
2.010	5.99	-2.02	4.21	2.09	.2992	.0672	-.0490	.0019	-.0045	.0233
2.010	5.87	-2.03	7.56	3.38	.2949	.0655	-.0539	.0010	-.0045	.0252
2.010	5.90	-2.03	4.22	4.98	.2881	.0648	-.0501	.0012	-.0044	.0249
2.010	5.83	-2.03	7.56	5.04	.2867	.0639	-.0531	.0005	-.0047	.0253
2.010	5.95	-2.02	0.00	4.97	.2837	.0651	-.0455	.0017	-.0047	.0239
2.010	5.95	-2.02	0.84	4.99	.2869	.0653	-.0468	.0018	-.0045	.0238
2.010	5.89	-2.03	4.19	5.01	.2900	.0652	-.0509	.0011	-.0044	.0247
2.010	5.83	-2.03	7.55	5.01	.2874	.0640	-.0536	.0004	-.0047	.0253
2.010	5.86	-2.03	7.56	3.34	.2952	.0656	-.0545	.0007	-.0046	.0253
2.010	5.99	-2.02	4.19	2.11	.3003	.0675	-.0490	.0019	-.0045	.0241
2.010	5.96	-2.00	1.68	2.06	.2839	.0651	-.0455	.0019	-.0048	.0216
2.010	5.87	-2.00	0.00	2.02	.2695	.0627	-.0452	.0015	-.0050	.0221
2.010	5.93	-2.00	-0.01	2.12	.2773	.0642	-.0448	.0013	-.0051	.0232
2.010	6.02	-2.00	1.65	2.15	.2944	.0672	-.0461	.0018	-.0049	.0226
2.010	6.03	-2.03	4.17	2.15	.3085	.0688	-.0501	.0020	-.0045	.0246
2.010	5.84	-2.03	7.52	3.42	.2984	.0656	-.0566	.0007	-.0046	.0253
2.010	5.81	-2.03	7.52	5.02	.2873	.0638	-.0546	.0004	-.0047	.0254
2.010	5.87	-2.03	4.17	5.04	.2909	.0651	-.0525	.0009	-.0043	.0249
2.010	5.96	-2.03	0.82	5.02	.2899	.0657	-.0477	.0017	-.0044	.0244
2.010	5.97	-2.02	-0.01	5.02	.2880	.0657	-.0462	.0017	-.0045	.0241
2.010	5.82	-2.03	0.82	10.00	.2833	.0632	-.0527	.0001	-.0048	.0252
2.010	5.86	-2.03	4.17	10.00	.2772	.0631	-.0490	.0003	-.0046	.0251
2.010	5.86	-2.03	7.52	10.03	.2776	.0631	-.0489	.0003	-.0046	.0249
2.010	5.86	-2.03	7.52	15.06	.2774	.0632	-.0487	.0003	-.0046	.0250
2.010	5.87	-2.03	7.52	10.03	.2792	.0635	-.0490	.0003	-.0047	.0252
2.010	5.85	-2.03	4.18	10.02	.2778	.0632	-.0492	.0003	-.0046	.0251
2.010	5.82	-2.03	0.82	10.04	.2839	.0633	-.0532	.0002	-.0048	.0252
2.010	5.99	-2.03	-0.02	5.06	.2941	.0667	-.0470	.0017	-.0045	.0246
2.010	5.96	-2.03	0.82	5.06	.2962	.0666	-.0494	.0018	-.0044	.0246
2.010	5.86	-2.03	4.18	5.07	.2956	.0654	-.0550	.0008	-.0044	.0251
2.010	5.79	-2.03	7.52	5.06	.2876	.0632	-.0556	.0003	-.0048	.0254
2.010	5.81	-2.03	7.52	3.43	.2999	.0654	-.0590	.0005	-.0048	.0254
2.010	6.03	-2.04	4.18	2.20	.3134	.0692	-.0514	.0020	-.0046	.0255
2.010	6.06	-2.01	1.67	2.18	.3006	.0682	-.0454	.0021	-.0049	.0234
2.010	6.00	-2.00	-0.02	2.18	.2870	.0660	-.0445	.0016	-.0051	.0231
2.010	5.76	-2.02	7.53	3.47	.3045	.0652	-.0629	.0006	-.0050	.0258
2.010	5.77	-2.03	7.53	5.10	.2882	.0629	-.0570	.0002	-.0048	.0253
2.010	5.83	-2.03	4.17	5.13	.3001	.0654	-.0578	.0006	-.0045	.0253
2.010	5.97	-2.03	0.81	5.13	.3024	.0672	-.0509	.0019	-.0044	.0249
2.010	6.01	-2.03	-0.03	5.11	.3014	.0674	-.0484	.0020	-.0045	.0248
2.010	5.81	-2.02	0.81	10.05	.2827	.0628	-.0533	.0001	-.0048	.0251
2.010	5.85	-2.03	4.16	10.05	.2776	.0629	-.0492	.0003	-.0046	.0250
2.010	5.86	-2.03	7.53	10.08	.2772	.0630	-.0486	.0003	-.0046	.0250
2.010	5.86	-2.03	7.52	15.10	.2768	.0630	-.0485	.0003	-.0047	.0250
2.010	5.99	-2.03	-0.02	5.18	.3093	.0682	-.0522	.0023	-.0045	.0251
2.010	5.96	-2.03	0.81	5.18	.3101	.0680	-.0540	.0022	-.0046	.0251
2.010	5.80	-2.03	4.17	5.17	.3044	.0655	-.0610	.0005	-.0046	.0255
2.010	5.76	-2.03	7.53	5.17	.2894	.0628	-.0580	.0002	-.0049	.0255
2.010	5.86	-2.03	7.53	15.15	.2764	.0630	-.0485	.0003	-.0047	.0250
2.010	5.86	-2.03	7.53	10.18	.2776	.0632	-.0486	.0003	-.0046	.0250
2.010	5.85	-2.03	4.17	10.17	.2780	.0630	-.0494	.0003	-.0046	.0250
2.010	5.80	-2.02	0.81	10.14	.2832	.0630	-.0539	.0001	-.0047	.0251
2.010	5.91	-2.00	-0.03	0.53	.2706	.0632	-.0436	.0015	-.0048	.0220
2.010	6.04	-1.99	1.65	0.55	.2822	.0657	-.0405	.0022	-.0051	.0215
2.010	6.09	-2.00	2.49	1.22	.2966	.0680	-.0424	.0021	-.0050	.0222
2.010	5.90	-2.00	-0.03	0.51	.2699	.0630	-.0438	.0015	-.0049	.0222
2.010	6.02	-1.99	1.65	0.52	.2815	.0653	-.0410	.0021	-.0051	.0212
2.010	6.07	-2.00	2.49	1.23	.2940	.0676	-.0427	.0019	-.0049	.0218
2.010	6.06	-2.00	2.49	1.23	.2952	.0675	-.0434	.0019	-.0048	.0216
2.010	6.01	-1.99	1.66	0.54	.2812	.0653	-.0416	.0021	-.0050	.0209
2.010	5.89	-2.00	-0.03	0.55	.2686	.0628	-.0437	.0017	-.0048	.0213

TABLE V.- AERODYNAMIC CHARACTERISTICS OF BOMB POD IN PRESENCE OF RETURN COMPONENT;

$\beta_P = 4^\circ$; $\beta_R = 2^\circ$

M	α_P, deg	β_P, deg	x_a, in.	z_a, in.	$C_{L,P}$	$C_{D,P}$	$C_{m,P}$	$C_{l,P}$	$C_{n,P}$	$C_{Y,P}$
1.570	12.39	-4.32	1.71	2.01	.9861	.4358	-1.7225	-.2878	-1.1597	.8703
1.570	12.27	-4.22	4.22	2.06	1.0016	.4745	-2.8131	-.3813	-1.7131	.8290
1.570	12.33	-4.28	7.57	3.31	1.1103	.5528	-2.6261	-.2990	-1.1875	.8047
1.570	12.34	-4.29	7.57	5.02	1.0364	.4918	-1.9698	-.3190	-1.3880	.8688
1.570	12.36	-4.31	4.22	5.00	.9778	.4171	-1.5384	-.3069	-1.1872	.8625
1.570	10.35	-4.31	0.00	4.97	.7596	.3462	-.7245	-.2086	-.8991	.7859
1.570	10.38	-4.30	0.84	4.97	.7056	.3324	-.4803	-.2105	-.9085	.7720
1.570	10.29	-4.27	4.20	4.99	.7494	.3382	-1.4339	-.2255	-.9877	.7365
1.570	10.28	-4.25	7.56	4.98	.7992	.4077	-1.6944	-.2471	-1.1794	.7604
1.570	10.27	-4.25	7.56	3.32	.8969	.4682	-2.3955	-.2270	-.9888	.7057
1.570	10.20	-4.19	4.20	2.08	.7702	.3857	-2.4903	-.3038	-1.5920	.7487
1.570	10.26	-4.27	1.68	2.04	.7380	.3500	-1.6622	-.1980	-.8638	.7166
1.570	10.35	-4.30	0.00	2.00	.6347	.3041	-.6512	-.2063	-.8859	.7638
1.570	5.13	-4.21	-0.01	2.08	.1925	.2237	-.3110	-.0630	-.2815	.4784
1.570	5.06	-4.18	1.66	2.10	.3665	.2567	-1.6216	-.0561	-.2831	.4384
1.570	5.06	-4.15	4.17	2.12	.3167	.2828	-1.7376	-.1211	-1.0949	.5654
1.570	5.06	-4.18	7.52	3.38	.5138	.3471	-2.0187	-.0878	-.4738	.4805
1.570	5.16	-4.18	7.53	5.01	.3773	.2866	-1.1529	-.0904	-.6064	.5094
1.570	5.11	-4.18	4.17	5.04	.3565	.2228	-1.2359	-.0875	-.6290	.5157
1.570	5.19	-4.22	0.82	5.02	.1754	.2039	.1262	-.0780	-.4952	.5374
1.570	5.18	-4.22	-0.01	5.01	.2365	.2117	-.1701	-.0865	-.5336	.5520
1.570	5.20	-4.21	0.82	10.03	.4064	.2365	-.7386	-.1058	-.7286	.5860
1.570	5.18	-4.20	4.17	10.02	.3793	.2325	-.7552	-.0991	-.6094	.5413
1.570	0.11	-4.15	7.52	15.05	-.0182	.1582	-.0413	-.0180	-.4507	.3750
1.570	0.09	-4.15	4.18	15.05	.0610	.2049	-.3567	-.0205	-.4591	.4157
1.570	0.10	-4.15	0.82	15.05	.0221	.2081	-.0712	-.0200	-.4161	.4142
1.570	0.09	-4.15	7.52	10.03	-.0694	.2141	-.0228	-.0111	-.4770	.4157
1.570	0.13	-4.14	4.18	10.02	-.0536	.1935	-.0017	-.0113	-.4449	.4057
1.570	0.11	-4.15	0.82	10.05	-.0544	.1958	.1505	-.0155	-.4785	.4268
1.570	0.09	-4.16	-0.02	5.06	-.2963	.1905	1.0580	.0089	-.4303	.4236
1.570	0.11	-4.15	0.82	5.06	-.3347	.1949	1.1825	.0045	-.4243	.4182
1.570	0.04	-4.13	4.18	5.06	-.0610	.2058	-.4429	-.0082	-.8333	.4798
1.570	0.05	-4.16	7.52	5.05	-.0622	.2632	-.3520	-.0063	-.2912	.3922
1.570	-0.02	-4.16	7.52	3.40	.1324	.3145	-1.4520	-.0168	-.2383	.3867
1.570	-0.06	-4.14	4.18	2.18	-.1167	.2663	-.9346	.0010	-.9879	.5172
1.570	-0.02	-4.14	1.67	2.12	-.0202	.2328	-1.1124	.0150	-.3767	.3889
1.570	0.04	-4.15	-0.01	2.11	-.2227	.2226	.3593	-.0041	-.0328	.3307
1.570	-5.07	-4.15	-0.03	2.16	-.6218	.3121	.7483	.0260	-.0821	.3385
1.570	-5.18	-4.13	1.65	2.20	-.4910	.2948	-.3721	.0765	-.8841	.4854
1.570	-5.21	-4.16	4.17	2.23	-.5176	.3425	-.5713	.1315	-1.1461	.5880
1.570	-5.15	-4.17	7.52	3.43	-.2448	.3496	-1.1940	.0257	-.2712	.4158
1.570	-5.11	-4.17	7.53	5.11	-.4773	.3136	.1779	.0577	-.4054	.4359
1.570	-5.09	-4.13	4.17	5.12	-.5200	.2575	.3891	.1309	-1.3030	.5793
1.570	-5.03	-4.15	0.81	5.13	-.7934	.2744	1.9513	.0944	-.6457	.4642
1.570	-5.00	-4.15	-0.03	5.11	-.8281	.2668	2.2130	.0910	-.6041	.4526
1.570	-5.02	-4.14	0.81	10.09	-.5019	.2627	.8537	.0648	-.5884	.4383
1.570	-5.04	-4.14	4.17	10.09	-.5180	.2598	.8187	.0816	-.6769	.4524
1.570	-5.05	-4.14	7.53	10.07	-.4848	.2862	.4275	.0685	-.6361	.4486
1.570	-5.01	-4.14	0.81	15.09	-.4297	.2707	.6207	.0582	-.5682	.4328
1.570	-5.04	-4.14	4.17	15.10	-.4188	.2630	.5160	.0660	-.6060	.4358
1.570	-5.04	-4.14	7.52	15.10	-.4573	.2636	.6524	.0700	-.6493	.4474
1.570	-8.22	-4.18	7.53	5.15	-.7317	.4055	.2909	.1086	-.6072	.4989
1.570	-8.16	-4.14	4.17	5.16	-.8225	.3532	.7650	.2326	-1.4231	.6334
1.570	-8.11	-4.16	0.81	5.18	-1.0791	.3774	2.2744	.1443	-.7148	.4912
1.570	-8.33	-4.16	-0.01	5.38	-1.1964	.3756	2.8624	.1344	-.6507	.4819
1.570	-10.19	-4.17	7.53	15.16	-.9573	.4156	1.1247	.1817	-.8907	.5466
1.570	-10.18	-4.16	4.17	15.16	-.9421	.4115	1.1825	.1908	-.8909	.5437
1.570	-10.18	-4.17	0.81	15.14	-.8806	.4111	.9402	.1710	-.8330	.5343
1.570	-10.27	-4.17	7.53	10.18	-.9352	.4334	.7402	.1896	-.9062	.5534
1.570	-10.22	-4.17	4.17	10.18	-1.0526	.4168	1.5523	.1983	-.8998	.5501
1.570	-10.18	-4.17	0.81	10.18	-.9813	.4100	1.3071	.1839	-.8764	.5445
1.570	-1.51	-4.19	-0.02	0.50	-.1421	.2643	-.4837	.0026	.4171	.2838
1.570	-1.59	-4.14	1.65	0.54	-.0653	.2729	-1.2261	.0259	-.9480	.5117
1.570	-1.59	-4.13	2.46	1.24	-.1574	.2678	-1.0882	.0322	-1.1919	.5528
1.570	-0.51	-4.19	-0.03	0.51	-.0710	.2547	-.5272	-.0042	.4903	.2755
1.570	-0.56	-4.14	1.65	0.53	.0331	.2631	-1.3648	-.0054	-.8768	.4992
1.570	-0.55	-4.12	2.50	1.21	-.0808	.2587	-1.1598	.0104	-1.1918	.5453
1.570	0.51	-4.21	-0.01	0.48	.0002	.2496	-.5710	-.0084	.5371	.2839
1.570	0.47	-4.15	1.66	0.49	.1096	.2526	-1.4479	-.0343	-.8295	.5007
1.570	0.49	-4.12	2.46	1.23	.0086	.2479	-1.2463	-.0201	-1.1760	.5378
1.570	12.25	-4.28	1.70	2.04	.6262	.2839	-1.6232	-.1452	-.5639	.6610
1.570	12.10	-4.18	4.21	2.10	.5243	.3636	-2.3737	-.2413	-1.0717	.6102
1.570	12.13	-4.22	7.57	3.34	.7753	.5551	-3.2215	-.1885	-.6678	.5940
1.570	12.18	-4.24	4.21	4.31	.6029	.2963	-1.6583	-.3218	-1.3964	.7943
1.570	12.27	-4.26	4.22	5.00	.6576	.2907	-1.3369	-.2827	-1.2116	.7868
1.570	10.38	-4.31	0.00	4.97	.3161	.2191	1.0544	-.1428	-.5835	.7104
1.570	10.34	-4.30	0.83	4.99	.3166	.2245	.8029	-.1331	-.5061	.6749
1.570	10.16	-4.23	4.19	5.02	.4393	.2226	-1.1727	-.2306	-1.1324	.7021
1.570	10.13	-4.22	7.55	5.01	.4207	.3411	-1.6882	-.1477	-.6224	.5669
1.570	10.10	-4.21	7.56	3.34	.6180	.4942	-2.9423	-.1256	-.4379	.5079

TABLE V.- AERODYNAMIC CHARACTERISTICS OF BOMB POD IN PRESENCE OF RETURN COMPONENT;

$\beta_P = 4^o$; $\beta_R = 2^o$ - Continued

M	α_P, deg	β_P, deg	x_a, in.	z_a, in.	$C_{L,P}$	$C_{D,P}$	$C_{m,P}$	$C_{l,P}$	$C_{n,P}$	$C_{Y,P}$
1.570	10.09	-4.17	4.20	2.08	.3469	.3138	-2.1360	-.1746	-.8951	.5524
1.570	10.14	-4.22	1.68	2.06	.3925	.2128	-1.3623	-.1293	-.6497	.5827
1.570	10.29	-4.28	0.00	2.02	.2422	.2000	.2687	-.0663	-.1897	.5654
1.570	5.11	-4.19	-0.02	2.09	-.2156	.1465	.9959	.0220	.1209	.3580
1.570	5.00	-4.15	1.65	2.12	-.1418	.1459	-.2117	-.0800	-.9826	.5386
1.570	4.93	-4.16	4.17	2.14	-.0953	.2417	-1.3238	-.0576	-.7198	.5024
1.570	4.94	-4.18	7.52	3.39	.2251	.3927	-2.2531	-.0290	-.0753	.3832
1.570	5.03	-4.17	7.52	5.04	.0404	.2616	-1.0057	-.0280	-.3372	.4303
1.570	5.07	-4.16	4.17	5.04	-.0117	.1448	-.3469	-.0874	-.9989	.5632
1.570	5.19	-4.21	0.82	5.01	-.1343	.1439	1.0254	-.0287	-.2775	.4682
1.570	5.22	-4.20	-0.01	5.00	-.2059	.1211	1.6394	-.0369	-.2797	.4639
1.570	5.21	-4.21	4.17	10.03	.0383	.1656	.7552	-.0730	-.4539	.5080
1.570	5.13	-4.18	7.52	10.03	.1732	.1875	-.4190	-.0876	-.7454	.5386
1.570	0.12	-4.15	7.52	15.06	-.2536	.1754	1.0987	-.0004	-.4556	.4182
1.570	0.09	-4.15	4.18	15.05	.0393	.2129	-.2275	-.0204	-.4654	.4267
1.570	0.10	-4.15	1.22	15.05	.0166	.2187	-.0572	-.0200	-.4101	.4143
1.570	0.06	-4.15	7.52	10.04	-.3092	.1693	.6050	.0158	-.8548	.5049
1.570	0.13	-4.14	4.18	10.04	-.4014	.1611	1.5537	.0092	-.5004	.4196
1.570	0.13	-4.15	0.82	10.04	-.1430	.1818	.5772	-.0058	-.4533	.4171
1.570	0.11	-4.15	-0.02	5.05	-.6757	.1407	2.5092	.0245	-.4992	.4272
1.570	0.08	-4.15	0.82	5.06	-.5858	.1735	1.8517	.0369	-.5569	.4420
1.570	-0.07	-4.18	7.52	5.07	-.3580	.2796	-.3310	.0347	-.3788	.4438
1.570	0.00	-4.15	4.18	5.07	-.4928	.1740	.8006	.0477	-1.1306	.5723
1.570	-0.18	-4.20	7.52	3.43	-.1618	.3826	-1.6558	.0147	.0367	.3806
1.570	-0.18	-4.19	4.18	2.17	-.4552	.2662	-.9647	.0433	-.9714	.5942
1.570	-0.09	-4.13	1.67	2.15	-.5710	.1910	.5079	.0305	-1.3663	.6004
1.570	0.02	-4.16	-0.01	2.13	-.7000	.1790	1.9571	.0525	-.1337	.3548
1.570	-5.27	-4.23	7.53	3.45	-.6281	.4131	-1.1002	.0982	-.4200	.5420
1.570	-5.24	-4.21	7.53	5.13	-.7543	.3460	.0662	.1387	-.6480	.5681
1.570	-5.15	-4.16	4.17	5.15	-.9925	.2663	1.7948	.1925	-1.2402	.6149
1.570	-5.09	-4.15	0.81	5.14	-1.0459	.2776	2.6472	.1258	-.6750	.4734
1.570	-5.00	-4.15	-0.03	5.10	-1.1554	.2548	3.4214	.1224	-.6296	.4593
1.570	-4.98	-4.14	0.81	10.08	-.6270	.2378	1.4920	.0736	-.5780	.4338
1.570	-4.99	-4.14	4.17	10.08	-.8238	.2542	2.2003	.0966	-.7252	.4582
1.570	-5.05	-4.15	7.53	10.08	-.7862	.2702	1.5552	.1307	-.8650	.5163
1.570	-5.03	-4.15	0.81	15.10	-.4349	.2798	.6983	.0553	-.5306	.4297
1.570	-5.01	-4.14	4.17	15.08	-.4470	.2632	.6878	.0695	-.6472	.4446
1.570	-5.01	-4.14	4.17	15.08	-.4471	.2637	.6872	.0734	-.6409	.4444
1.570	-5.00	-4.14	7.53	15.11	-.7476	.2528	2.0677	.0795	-.6312	.4427
1.570	-8.11	-4.16	-0.02	5.18	-1.4708	.3967	3.8381	.1480	-.5594	.4648
1.570	-8.14	-4.16	0.81	5.18	-1.3560	.4050	3.0376	.1579	-.5732	.4683
1.570	-8.22	-4.18	4.17	5.19	-1.3412	.3935	2.2758	.2277	-1.1693	.6277
1.570	-8.33	-4.23	7.53	5.17	-1.0771	.4536	.3268	.1624	-.6900	.6034
1.570	-10.11	-4.16	7.53	15.15	-1.2565	.4403	2.6429	.1855	-.8781	.5360
1.570	-10.15	-4.16	4.17	15.14	-.9854	.4203	1.4339	.1859	-.8629	.5386
1.570	-10.17	-4.17	0.81	15.14	-.9224	.4269	1.1411	.1688	-.8189	.5323
1.570	-10.27	-4.17	7.54	10.19	-1.3328	.4573	2.2191	.2070	-.8621	.5546
1.570	-10.20	-4.17	4.17	10.19	-1.3095	.4485	2.6042	.2094	-.8773	.5450
1.570	-10.17	-4.16	0.82	10.20	-1.1939	.4156	2.3820	.2269	-.9550	.5605
1.570	4.57	-4.27	-0.03	0.47	-.1902	.1710	.1780	.0747	.5192	.3859
1.570	4.46	-4.23	1.65	0.51	-.1250	.1926	-.7492	-.0448	-.7043	.6097
1.570	4.45	-4.15	2.49	1.19	-.1287	.2031	-1.0414	-.0748	-1.2978	.6151
1.570	5.55	-4.30	-0.03	0.49	-.0966	.1739	.0410	.0742	.6080	.4159
1.570	5.52	-4.26	1.66	0.49	-.0430	.2006	-.9240	-.0609	-.6403	.6433
1.570	5.44	-4.16	2.49	1.20	-.0304	.2108	-1.2086	-.0976	-1.2519	.6106
1.570	6.55	-4.34	-0.02	0.50	-.0192	.1761	-.0795	.0731	.6628	.4649
1.570	6.49	-4.30	1.66	0.50	.0303	.1931	-1.1203	-.0649	-.5787	.6848
1.570	6.43	-4.17	2.48	1.21	.0582	.2104	-1.4073	-.1225	-1.1967	.6202
1.570	12.41	0.07	1.71	2.00	1.0244	.4553	-1.9186	-.0162	-.2235	-.0067
1.570	12.26	0.02	4.22	2.05	1.0250	.4832	-3.0004	.0830	.3603	-.0710
1.570	12.31	0.01	7.57	3.32	1.1399	.5570	-2.7678	-.0224	-.0167	.0306
1.570	12.36	0.00	7.57	5.00	1.0647	.5051	-2.1266	-.0208	.0268	.0480
1.570	12.36	0.07	4.22	5.00	1.0124	.4283	-1.6380	-.0169	-.2723	.0059
1.570	10.37	0.04	0.00	4.96	.8025	.3548	-.8788	-.0198	-.1244	.0099
1.570	10.37	0.05	0.84	4.98	.7318	.3424	-.5205	-.0212	-.1604	.0071
1.570	10.27	0.05	4.20	5.00	.7764	.3437	-1.5647	-.0280	-.2119	.0220
1.570	10.28	0.01	7.56	4.98	.8292	.4214	-1.8419	-.0243	.0097	.0381
1.570	10.28	0.02	7.56	3.31	.9283	.4691	-2.5633	-.0289	-.0576	.0365
1.570	10.22	0.02	4.20	2.06	.7833	.3965	-2.5852	.0452	.2982	-.0436
1.570	10.26	0.05	1.69	2.04	.7691	.3605	-1.7516	-.0297	-.1947	.0139
1.570	10.37	0.06	0.01	1.98	.6724	.3191	-.8081	-.0161	-.2279	-.0004
1.570	5.16	0.04	-0.01	2.06	.1734	.2145	-.1640	-.0215	-.2292	.0410
1.570	5.06	0.03	1.66	2.10	.3448	.2514	-1.4934	-.0157	-.0922	.0244
1.570	5.06	0.01	4.17	2.12	.2560	.2765	-1.4575	.0034	.1171	-.0014
1.570	5.09	0.02	7.52	3.37	.5058	.3450	-1.9788	-.0116	-.0378	.0256
1.570	5.19	0.02	7.53	5.00	.3333	.2759	-.9623	-.0054	.0099	.0172
1.570	5.14	0.03	4.57	5.05	.3837	.2245	-1.4021	-.0031	.0425	-.0029
1.570	5.22	0.03	0.82	5.01	.1555	.2032	.2696	-.0167	-.1349	.0269
1.570	5.21	0.03	-0.01	5.00	.2050	.2090	-.0330	-.0112	-.0712	.0168
1.570	5.23	0.04	0.82	10.01	.3940	.2351	-.5872	-.0106	-.0552	.0054

TABLE V.- AERODYNAMIC CHARACTERISTICS OF BOMB POD IN PRESENCE OF RETURN COMPONENT;

$\beta_P = 4^o$; $\beta_R = 2^o$ - Continued

M	α_P, deg	β_P, deg	x_a, in.	z_a, in.	$C_{L,P}$	$C_{D,P}$	$C_{m,P}$	$C_{l,P}$	$C_{n,P}$	$C_{Y,P}$
1.570	5.18	0.03	4.17	10.02	.3681	.2310	-.6683	-.0123	-.0716	.0115
1.570	5.18	0.04	7.52	10.02	.3289	.2415	-.5448	-.0120	-.0711	.0061
1.570	0.11	0.03	7.52	15.05	-.0106	.2047	-.0600	-.0051	-.1048	.0208
1.570	0.09	0.03	4.18	15.05	.0443	.2057	-.2636	-.0052	-.0708	.0121
1.570	0.08	0.03	0.82	15.07	.0050	.2095	.0243	-.0047	-.0412	.0075
1.570	0.12	0.03	7.52	10.02	-.0644	.2266	-.0707	-.0049	-.0513	.0071
1.570	0.10	0.03	4.18	10.03	-.0705	.1928	.0816	-.0001	-.0564	.0083
1.570	0.11	0.03	0.82	10.05	-.0658	.2031	.1812	.0001	-.0411	.0088
1.570	0.08	0.03	-0.01	5.06	-.2904	.1911	.9974	.0015	-.0569	.0160
1.570	0.11	0.03	0.82	5.06	-.3180	.1990	1.1182	.0015	-.0987	.0210
1.570	0.02	0.02	4.18	5.05	-.0122	.2138	-.7279	-.0010	.1248	-.0111
1.570	0.05	0.03	7.52	5.05	-.0626	.2720	-.3492	-.0008	-.0370	.0173
1.570	-0.04	0.02	7.52	3.40	.1429	.3152	-1.4755	-.0029	-.0485	.0210
1.570	-0.06	0.02	4.18	2.17	-.1236	.2683	-.8748	-.0017	.0493	.0117
1.570	-0.04	0.02	1.67	2.13	-.0311	.2387	-1.0880	-.0066	.0020	.0107
1.570	0.04	0.03	-0.01	2.11	-.2275	.2231	.3759	-.0045	-.1729	.0387
1.570	-5.14	0.03	7.52	3.42	-.2174	.3505	-1.2067	-.0017	-.0621	.0113
1.570	-5.09	0.03	-0.03	2.18	-.6376	.3117	.8963	.0121	-.1246	.0299
1.570	-5.21	0.02	1.65	2.22	-.4526	.2963	-.5277	-.0082	.0793	.0016
1.570	-5.20	0.03	4.17	2.22	-.5084	.3337	-.5632	.0029	.0037	.0060
1.570	-5.08	0.03	7.53	5.09	-.4613	.3075	.1690	.0006	-.0589	.0130
1.570	-5.08	0.02	4.17	5.12	-.4826	.2629	.2745	-.0253	.2955	-.0535
1.570	-5.03	0.03	0.81	5.12	-.7925	.2809	1.9827	.0136	-.0655	.0152
1.570	-4.99	0.03	-0.03	5.10	-.8391	.2635	2.3351	.0170	-.0975	.0187
1.570	-4.99	0.04	0.80	10.08	-.4866	.2520	.8676	.0076	-.0736	.0093
1.570	-5.02	0.03	7.52	10.06	-.4488	.2820	.3663	.0035	-.0364	.0045
1.570	-5.01	0.03	0.81	15.09	-.3977	.2619	.5541	.0037	-.0341	.0059
1.570	-5.03	0.03	4.56	15.07	-.4255	.2556	.6118	.0041	-.0370	.0032
1.570	-5.01	0.03	7.52	15.09	-.4471	.2565	.6427	.0086	-.0895	.0141
1.570	-8.19	0.03	7.53	5.13	-.7425	.4047	.3907	-.0037	-.0042	-.0017
1.570	-8.16	0.02	4.17	5.17	-.8222	.3631	.8784	-.0491	.2611	-.0506
1.570	-8.08	0.03	0.81	5.17	-1.0821	.3892	2.3700	.0132	-.0328	.0054
1.570	-8.09	0.03	-0.02	5.18	-1.1736	.3769	2.8982	.0152	-.0404	.0067
1.570	-10.17	0.03	7.53	15.16	-.9476	.4113	1.2555	.0087	-.0381	.0029
1.570	-10.15	0.04	4.17	15.15	-.9479	.4122	1.3314	-.0002	.0130	-.0103
1.570	-10.13	0.03	0.80	15.12	-.8753	.4125	1.0474	-.0015	.0177	-.0063
1.570	-10.17	0.04	0.81	10.18	-.9862	.4144	1.4425	.0066	-.0239	-.0022
1.570	-10.22	0.03	4.17	10.19	-1.0620	.4263	1.7153	.0085	-.0318	.0034
1.570	-10.27	0.03	7.53	10.18	-.9122	.4371	.7047	.0056	-.0016	-.0055
1.570	-1.58	0.01	2.46	1.24	-.1528	.2744	-1.1937	-.0111	.1651	-.0090
1.570	-0.50	0.03	-0.03	0.49	-.0798	.2548	-.6352	.0003	-.2537	.0640
1.570	-0.58	0.01	1.65	0.52	.0493	.2664	-1.5662	.0018	-.0418	.0428
1.570	-0.53	0.02	2.50	1.19	-.0710	.2664	-1.2800	-.0081	.1638	-.0130
1.570	0.48	0.01	2.46	1.24	-.0003	.2596	-1.3127	-.0049	.2032	-.0141
1.570	0.43	0.01	1.66	0.51	.1204	.2678	-1.6615	-.0036	-.0377	.0354
1.570	0.52	0.03	-0.01	0.46	-.0143	.2652	-.6791	-.0040	-.2350	.0535
1.570	12.09	0.00	4.21	2.09	.4454	.3568	-2.1751	-.0254	-.0772	.0665
1.570	12.25	0.02	1.70	2.04	.6025	.2925	-1.4795	-.0066	.0238	.0060
1.570	12.11	0.02	7.56	3.35	.7471	.5397	-3.1075	-.0506	-.1638	.0601
1.570	12.16	0.01	7.56	5.05	.5675	.3810	-1.8488	-.0381	-.1171	.0662
1.570	12.27	0.02	4.22	5.00	.6532	.2963	-1.3121	.0174	.1522	-.0143
1.570	10.38	0.03	0.00	4.97	.3420	.2295	.8993	-.0331	-.1638	.0353
1.570	10.31	0.03	0.83	5.00	.3313	.2356	.7253	-.0291	-.1418	.0303
1.570	10.17	0.02	4.19	5.02	.4304	.2295	-1.1157	.0386	.2479	-.0398
1.570	10.13	0.01	7.55	5.02	.4094	.3378	-1.6332	-.0250	-.0963	.0489
1.570	10.11	0.02	7.56	3.34	.6078	.4928	-2.9526	-.0263	-.0904	.0442
1.570	10.08	0.00	4.20	2.08	.2720	.2947	-1.9483	-.0164	-.0446	.0520
1.570	10.18	0.02	1.68	2.03	.4100	.2318	-1.3750	.0059	.0967	-.0102
1.570	10.32	0.04	0.00	2.00	.2290	.2062	.4625	-.0193	-.1346	.0185
1.570	5.10	0.03	0.38	2.12	-.1926	.1604	.6283	.0054	.0472	-.0051
1.570	5.00	0.02	1.65	2.12	-.1168	.1626	-.3747	.0146	.2216	-.0292
1.570	4.91	0.01	4.17	2.15	-.1120	.2399	-1.2873	-.0179	-.1732	.0668
1.570	4.84	0.02	7.51	3.46	.1938	.3793	-2.1279	-.0109	-.0787	.0386
1.570	5.03	0.02	7.52	5.04	.0135	.2533	-.9297	-.0093	-.0823	.0390
1.570	5.10	0.02	4.17	5.03	-.0630	.1423	-.0860	.0066	.1242	-.0187
1.570	5.19	0.03	0.82	5.01	-.1349	.1486	1.0550	-.0058	-.0350	.0126
1.570	5.25	0.03	-0.01	4.99	-.2117	.1208	1.6814	-.0072	-.0614	.0150
1.570	5.27	0.04	0.83	9.98	.3457	.2250	-.3481	-.0110	-.0633	.0075
1.570	5.25	0.03	4.17	10.02	.0264	.1628	.8731	-.0104	-.0806	.0150
1.570	5.14	0.03	7.52	10.03	.1548	.1881	-.2709	.0068	.1267	-.0270
1.570	0.14	0.03	7.52	15.05	-.2425	.1767	1.0479	.0013	-.1308	.0273
1.570	0.09	0.03	4.18	15.05	.0166	.2096	-.1181	-.0005	-.0642	.0099
1.570	0.11	0.03	0.82	15.05	.0212	.2137	-.0059	-.0003	-.0541	.0106
1.570	0.09	0.03	7.52	10.03	-.3211	.1777	.6778	.0060	.0801	-.0179
1.570	0.13	0.03	4.18	10.05	-.3901	.1628	1.5037	.0025	-.0574	.0074
1.570	0.11	0.03	0.82	10.06	-.1325	.1852	.5774	.0008	-.0473	.0058
1.570	0.12	0.03	-0.01	5.05	-.6807	.1416	2.5514	.0044	-.0282	.0061
1.570	0.08	0.03	0.82	5.06	-.5743	.1716	1.8051	.0032	-.0005	.0027
1.570	0.00	0.03	4.18	5.07	-.5044	.1763	.8786	.0015	.0386	-.0088
1.570	-0.07	0.02	7.52	5.07	-.3519	.2780	-.3479	-.0010	-.0964	.0381

TABLE V.- AERODYNAMIC CHARACTERISTICS OF BOMB POD IN PRESENCE OF RETURN COMPONENT;

$\beta_P = 4^o$; $\beta_R = 2^o$ - Continued

M	α_P, deg	β_P, deg	x_a, in.	z_a, in.	$C_{L,P}$	$C_{D',P}$	$C_{m,P}$	$C_{l,P}$	$C_{n,P}$	$C_{Y,P}$
1.570	-0.18	0.02	7.52	3.43	-.1392	.3637	-1.7286	-.0034	-.0715	.0359
1.570	-0.21	0.02	4.18	2.19	-.4384	.2653	-1.0312	-.0020	-.2122	.0670
1.570	-0.09	0.02	1.67	2.15	-.5498	.2066	.3860	.0052	.2057	-.0349
1.570	0.00	0.02	-0.01	2.15	-.7153	.1881	2.0434	.0085	.1555	-.0206
1.570	-5.27	0.04	7.53	3.45	-.6272	.4211	-1.0329	-.0074	-.0458	.0002
1.570	-5.23	0.04	7.53	5.13	-.7754	.3584	.2426	-.0126	-.0096	-.0091
1.570	-5.10	0.03	4.17	5.13	-1.0325	.2662	2.0998	-.0044	.0389	-.0141
1.570	-5.05	0.03	0.81	5.12	-1.0611	.2925	2.7504	.0073	.0250	-.0056
1.570	-4.99	0.03	-0.03	5.10	-1.1715	.2616	3.5490	.0094	.0180	-.0086
1.570	-4.97	0.04	0.81	10.07	-.6112	.2325	1.5064	.0155	-.0994	.0117
1.570	-4.96	0.04	4.17	10.07	-.8299	.2538	2.2967	.0118	-.0382	.0012
1.570	-5.01	0.04	7.53	10.07	-.8143	.2707	1.7507	.0098	-.0797	.0073
1.570	-4.99	0.03	7.53	15.11	-.7373	.2503	2.1210	.0118	-.0942	.0168
1.570	-5.01	0.04	4.16	15.08	-.4259	.2600	.6630	.0054	-.0511	.0007
1.570	-5.00	0.03	0.81	15.08	-.4089	.2680	.6334	.0041	-.0369	.0066
1.570	-8.09	0.03	-0.02	5.18	-1.4750	.4055	4.0131	.0019	.0704	-.0181
1.570	-8.13	0.03	0.81	5.18	-1.3543	.4134	3.1372	-.0033	.0621	-.0153
1.570	-8.20	0.04	4.17	5.20	-1.3906	.4042	2.6687	-.0166	.0844	-.0320
1.570	-8.35	0.03	7.53	5.19	-1.0923	.4617	.4988	-.0091	.0027	-.0068
1.570	-10.12	0.03	0.80	15.12	-.9086	.4208	1.2340	.0007	.0069	-.0014
1.570	-10.16	0.03	4.17	15.15	-.9879	.4162	1.5956	.0019	.0043	-.0016
1.570	-10.14	0.03	7.53	15.17	-1.2596	.4336	2.8167	.0119	-.0398	.0062
1.570	-10.25	0.04	7.54	10.19	-1.3609	.4668	2.4790	.0019	.0127	-.0165
1.570	-10.19	0.03	4.17	10.19	-1.3096	.4577	2.7548	.0072	.0121	-.0080
1.570	-10.13	0.04	0.81	10.19	-1.2080	.4098	2.6121	.0179	-.0500	-.0018
1.570	4.52	0.04	-0.03	0.49	-.1875	.1653	.0350	-.0043	.0026	-.0121
1.570	4.44	0.03	1.65	0.51	-.1031	.2010	-.9857	-.0011	.0102	-.0045
1.570	4.46	0.02	2.49	1.18	-.1191	.2097	-1.1837	.0022	.0563	.0026
1.570	5.54	0.04	-0.03	0.49	-.1103	.1688	-.0364	-.0040	.0063	-.0129
1.570	5.50	0.04	1.66	0.48	-.0111	.2150	-1.1749	.0033	.0111	-.0127
1.570	5.45	0.02	2.49	1.19	-.0479	.2138	-1.2775	.0015	.0881	-.0020
1.570	6.46	0.02	2.89	1.24	.0117	.2258	-1.4336	-.0053	.0173	.0107
1.570	6.48	0.04	1.66	0.50	.0763	.2226	-1.3759	.0065	.0390	-.0182
1.570	6.52	0.04	-0.03	0.52	-.0448	.1758	-.0797	-.0034	.0119	-.0167
2.010	13.08	-4.26	1.71	2.04	.9225	.4211	.3765	-.1702	-.6858	.7725
2.010	12.95	-4.22	4.22	2.05	.8849	.4199	-.8373	-.1398	-.5514	.6694
2.010	12.89	-4.19	7.57	3.32	.9711	.4898	-1.4206	-.2222	-1.0236	.7300
2.010	13.00	-4.23	7.57	5.00	1.0114	.4593	-.5754	-.1997	-.8322	.7637
2.010	13.07	-4.24	4.22	4.99	1.1696	.4915	.0325	-.1810	-.9417	.8073
2.010	10.96	-4.23	0.00	4.98	.9149	.4021	-.3397	-.1862	-.9788	.7897
2.010	10.96	-4.23	0.84	4.99	.8951	.4009	-.2601	-.1641	-.8943	.7773
2.010	10.99	-4.24	4.20	4.97	.8051	.3787	.2183	-.1292	-.5805	.7188
2.010	10.89	-4.21	7.56	4.98	.7239	.3529	-.5233	-.1102	-.5075	.6469
2.010	10.86	-4.17	7.56	3.31	.7231	.3852	-1.3195	-.1776	-.8758	.6474
2.010	10.87	-4.20	4.20	2.06	.6267	.3267	-.8540	-.0724	-.2547	.5637
2.010	10.96	-4.24	1.67	2.04	.5852	.2981	.4608	-.0940	-.3757	.6717
2.010	11.01	-4.25	0.01	2.00	.7777	.3530	.1673	-.1270	-.5399	.7330
2.010	10.86	-4.17	7.56	3.31	.7292	.3875	-1.3212	-.1801	-.8890	.6476
2.010	5.75	-4.19	-0.01	2.11	.1340	.2026	.6939	-.0431	-.2218	.5362
2.010	5.71	-4.18	1.65	2.13	-.0128	.1781	.8682	-.0060	.0313	.4605
2.010	5.63	-4.13	4.17	2.12	.1986	.2267	-.8724	-.0053	.0685	.3654
2.010	5.65	-4.12	7.52	3.37	.2749	.2573	-1.0289	-.0975	-.7291	.5240
2.010	5.75	-4.15	7.53	4.99	.2609	.2274	-.5583	-.0316	-.1410	.4481
2.010	5.78	-4.18	4.17	5.02	.2036	.2258	.4647	-.0353	-.1409	.5023
2.010	5.79	-4.18	0.82	5.01	.3075	.2419	.0459	-.0631	-.3498	.5484
2.010	5.77	-4.18	-0.01	5.02	.3535	.2451	-.1172	-.0802	-.5141	.5883
2.010	5.79	-4.18	0.82	10.01	.4491	.2648	-.3375	-.0711	-.3708	.5494
2.010	5.77	-4.17	4.17	10.02	.4433	.2632	-.4109	-.0711	-.3706	.5374
2.010	5.77	-4.17	7.52	10.03	.3789	.2515	-.1828	-.0681	-.3449	.5236
2.010	0.66	-4.12	7.52	15.06	.0563	.2115	-.1376	-.0230	-.0895	.3792
2.010	0.71	-4.12	7.52	10.02	-.0490	.1996	.2652	-.0059	-.0640	.3705
2.010	0.68	-4.12	4.18	10.02	.0431	.2038	-.0903	-.0128	-.1221	.3839
2.010	0.67	-4.12	0.82	10.04	.0359	.2092	.0330	-.0168	-.0535	.3723
2.010	0.66	-4.14	-0.02	5.06	-.1082	.1945	.5513	-.0001	-.0672	.3996
2.010	0.67	-4.13	0.82	5.05	-.1408	.1936	.6205	.0016	.0440	.3714
2.010	0.66	-4.13	4.18	5.04	-.2648	.1952	.9835	.0118	-.0394	.3836
2.010	0.60	-4.12	7.52	5.03	-.0769	.2124	-.3613	-.0041	-.2548	.4073
2.010	0.53	-4.11	7.52	3.40	-.1132	.2314	-.5623	-.0221	-.8552	.5239
2.010	0.54	-4.11	4.18	2.15	-.1660	.2176	-.5186	.0029	-.1078	.3613
2.010	0.61	-4.13	1.67	2.16	-.4139	.1958	1.2184	.0265	.2204	.3272
2.010	0.64	-4.13	-0.02	2.14	-.3889	.1814	1.4659	.0244	-.3629	.4545
2.010	-4.44	-4.13	-0.03	2.20	-.9278	.2834	2.3781	.1115	-.4286	.4783
2.010	-4.56	-4.13	1.65	2.24	-.8317	.3018	1.5430	.0497	.1566	.3465
2.010	-4.58	-4.12	4.17	2.19	-.6085	.3020	-.1257	.0614	-.4553	.4595
2.010	-4.56	-4.13	7.53	3.41	-.5171	.3022	-.2403	.0854	-.9104	.5817
2.010	-4.55	-4.11	7.53	5.08	-.4427	.2774	-.1526	.0518	-.6127	.4850
2.010	-4.47	-4.13	4.17	5.09	-.6444	.2829	1.2251	.0396	-.1432	.4032
2.010	-4.46	-4.13	0.81	5.10	-.5689	.2542	1.1299	.0310	-.1031	.3901
2.010	-4.44	-4.13	-0.03	5.09	-.5558	.2562	1.0970	.0240	-.0836	.3858
2.010	-4.43	-4.11	0.81	10.05	-.3708	.2589	.3561	.0214	-.2099	.3935

TABLE V.- AERODYNAMIC CHARACTERISTICS OF BOMB POD IN PRESENCE OF RETURN COMPONENT;

$\beta_P = 4^\circ$; $\beta_R = 2^\circ$ - Concluded

M	α_P, deg	β_P, deg	x_a, in.	z_a, in.	$C_{L,P}$	$C_{D,P}$	$C_{m,P}$	$C_{l,P}$	$C_{n,P}$	$C_{Y,P}$
2.010	-4.44	-4.11	4.16	10.06	-.3772	.2565	.3426	.0273	-.2878	.4063
2.010	-4.45	-4.11	7.52	10.07	-.4625	.2587	.6366	.0232	-.2269	.3962
2.010	-4.44	-4.11	7.52	15.09	-.3573	.2591	.2470	.0211	-.2073	.3926
2.010	-7.55	-4.14	-0.03	5.16	-.8549	.3357	1.3291	.0568	-.2161	.4429
2.010	-7.54	-4.14	0.81	5.15	-.8683	.3309	1.3479	.0705	-.3635	.4688
2.010	-7.57	-4.14	4.17	5.14	-.9077	.3701	1.2076	.0672	-.2137	.4457
2.010	-7.66	-4.13	7.53	5.13	-.7517	.3629	-.0321	.0981	-.7511	.5489
2.010	-9.59	-4.15	7.52	15.14	-.8479	.4044	.4336	.0835	-.4368	.5053
2.010	-9.66	-4.14	7.53	10.17	-.9738	.4048	.9172	.1067	-.5347	.5225
2.010	-9.65	-4.14	4.17	10.17	-.8957	.3980	.6672	.1226	-.6010	.5297
2.010	-9.62	-4.14	0.81	10.14	-.8165	.3953	.3648	.0922	-.4878	.5133
2.010	-0.90	-4.17	-0.02	0.52	-.3984	.2163	.7145	.0315	.1363	.4153
2.010	-1.01	-4.17	1.65	0.58	-.3222	.2395	-.2804	.0156	.6954	.2865
2.010	-0.97	-4.14	2.46	1.26	-.4132	.2316	.0430	.0297	.1591	.3525
2.010	0.11	-4.17	-0.03	0.53	-.3383	.2059	.7890	.0234	.1657	.4153
2.010	0.04	-4.17	1.65	0.56	-.2563	.2291	-.2382	.0233	.7620	.2703
2.010	0.04	-4.14	2.50	1.23	-.3334	.2206	-.0386	.0273	.2287	.3314
2.010	1.09	-4.14	2.46	1.26	-.2541	.2048	-.0613	.0398	.3619	.3095
2.010	1.06	-4.17	1.66	0.53	-.1966	.2175	-.1800	.0391	.8611	.2612
2.010	1.10	-4.18	-0.01	0.52	-.2842	.1926	.8196	.0230	.2568	.4062
2.010	13.02	-4.27	1.70	2.04	.4369	.2487	1.4201	.0522	.1613	.6030
2.010	12.74	-4.18	4.21	2.09	.4702	.2702	-1.3738	-.0338	-.1861	.5073
2.010	12.65	-4.15	7.56	3.38	.5372	.3803	-2.0753	-.2698	-1.1725	.6884
2.010	13.07	-4.25	4.22	4.98	.6633	.3482	1.4813	.0320	.2381	.5529
2.010	12.81	-4.19	7.56	5.04	.6193	.3226	-.7701	-.1171	-.5781	.6185
2.010	11.00	-4.23	0.00	4.97	.7975	.3682	.3813	-.1674	-1.0255	.7958
2.010	10.98	-4.23	0.84	4.99	.6662	.3235	.8421	-.1374	-.7941	.7421
2.010	10.93	-4.23	4.19	5.01	.3229	.2477	1.5877	.0230	.0997	.5449
2.010	10.75	-4.17	7.55	5.01	.3775	.2475	-.6869	-.1104	-.6257	.5900
2.010	10.68	-4.14	7.56	3.34	.3638	.3293	-1.9199	-.2040	-1.0205	.6259
2.010	10.68	-4.16	4.19	2.11	.2347	.2209	-1.1002	-.0489	-.3318	.5088
2.010	10.91	-4.24	1.68	2.06	.1200	.1802	1.6251	.0878	.2640	.5302
2.010	11.01	-4.25	0.00	2.02	.2209	.2158	2.2113	-.0204	-.3214	.6830
2.010	5.77	-4.19	-0.01	2.12	-.5595	.0857	3.3137	.0555	.0596	.4719
2.010	5.67	-4.19	1.65	2.15	-.4900	.1232	2.1967	.1085	.4460	.3770
2.010	5.54	-4.13	4.17	2.15	-.2724	.1676	-.3458	-.0199	-.5682	.5055
2.010	5.47	-4.14	7.52	3.42	-.0744	.2377	-1.3087	-.0695	-.6796	.5378
2.010	5.67	-4.13	7.52	5.02	-.1079	.1662	-.0128	-.0609	-.7549	.5418
2.010	5.75	-4.17	4.17	5.04	-.2844	.1360	1.9518	.0421	.1641	.4113
2.010	5.83	-4.18	0.82	5.02	-.0417	.1536	1.8125	-.0070	-.2035	.5042
2.010	5.79	-4.18	-0.01	5.02	.1653	.1950	.8329	-.0580	-.3152	.5368
2.010	5.81	-4.18	0.82	10.00	.4907	.2831	-.4978	-.0742	-.3971	.5537
2.010	5.81	-4.17	4.17	10.00	.4329	.2700	-.2573	-.0672	-.3344	.5280
2.010	5.81	-4.17	7.52	10.03	.1180	.1963	1.1754	-.0385	-.1329	.4793
2.010	0.66	-4.12	7.52	15.06	.0686	.2224	-.1701	-.0228	-.0756	.3726
2.010	0.75	-4.12	7.52	10.03	-.4294	.1569	2.1438	.0318	.0728	.3389
2.010	0.69	-4.12	4.18	10.02	-.0035	.2039	.1765	-.0068	-.1167	.3799
2.010	0.67	-4.12	0.82	10.04	.0552	.2141	-.0324	-.0176	-.0991	.3817
2.010	0.73	-4.13	-0.02	5.06	-.5469	.1274	2.7132	.0356	-.0868	.3920
2.010	0.74	-4.13	0.82	5.06	-.7241	.1147	3.5375	.0545	-.0035	.3777
2.010	0.63	-4.13	4.18	5.07	-.6519	.1732	2.0647	.0495	-.1580	.4072
2.010	0.53	-4.13	7.52	5.06	-.4813	.1959	.4163	.0191	-1.1217	.6288
2.010	0.38	-4.16	7.52	3.43	-.4620	.2551	-.8167	.0239	-.6589	.5878
2.010	0.41	-4.12	4.18	2.20	-.6955	.2244	.1037	-.0191	-1.3367	.6653
2.010	0.56	-4.15	1.67	2.18	-.9227	.1805	2.5243	.0689	.0386	.4111
2.010	0.63	-4.15	-0.02	2.18	-1.0728	.1337	4.0914	.0990	.0639	.4032
2.010	-4.78	-4.20	7.53	3.47	-1.0008	.3558	-.4732	.1210	-.9897	.7273
2.010	-4.60	-4.15	7.53	5.10	-.9890	.2995	1.0316	.1705	-1.1432	.6768
2.010	-4.53	-4.13	4.17	5.13	-1.0635	.2834	2.4368	.0809	-.3754	.4533
2.010	-4.38	-4.12	0.81	5.13	-1.3194	.2283	4.7853	.0232	.0870	.3385
2.010	-4.36	-4.13	-0.03	5.11	-1.1887	.2246	4.2997	.0484	-.0465	.3745
2.010	-4.43	-4.11	0.81	10.05	-.3681	.2683	.3843	.0202	-.1931	.3876
2.010	-4.41	-4.11	4.16	10.05	-.4408	.2581	.6721	.0403	-.3841	.4201
2.010	-4.40	-4.11	7.53	10.08	-.5951	.2549	2.7546	.0523	-.2805	.3933
2.010	-4.48	-4.11	7.52	15.10	-.3218	.2664	.1029	.0149	-.1977	.3854
2.010	-7.46	-4.13	-0.02	5.18	-1.5716	.3329	4.9229	.0648	-.2305	.4224
2.010	-7.44	-4.13	0.81	5.18	-1.7122	.3702	5.5316	.0566	-.1584	.4146
2.010	-7.60	-4.14	4.17	5.17	-1.3881	.3978	2.6661	.1228	-.4134	.4949
2.010	-7.76	-4.17	7.53	5.17	-1.4392	.4325	1.4912	.2701	-1.4865	.7955
2.010	-9.62	-4.15	7.53	15.15	-.8257	.4065	.3524	.0910	-.4819	.5159
2.010	-9.62	-4.14	7.53	10.18	-1.3828	.4568	2.8540	.1269	-.5405	.5184
2.010	-9.63	-4.13	4.17	10.17	-1.0096	.3858	1.3302	.1298	-.7029	.5434
2.010	-9.61	-4.14	0.81	10.14	-.8534	.4050	.6149	.0913	-.4811	.5028
2.010	5.16	-4.24	-0.03	0.53	-.4676	.1077	1.9010	.0745	.2436	.5257
2.010	5.04	-4.26	1.65	0.55	-.3158	.1786	.0716	.1208	.9742	.4064
2.010	5.07	-4.19	2.49	1.22	-.3976	.1559	.2712	.0676	.1459	.4461
2.010	6.21	-4.25	-0.03	0.51	-.3935	.0995	1.9112	.0854	.2987	.5437
2.010	6.11	-4.28	1.65	0.52	-.2755	.1667	.2104	.1564	1.0782	.4053
2.010	6.07	-4.19	2.49	1.23	-.3364	.1424	.2701	.0831	.2638	.4286
2.010	7.07	-4.20	2.49	1.23	-.2628	.1365	.2649	.1122	.4122	.4178
2.010	7.10	-4.29	1.66	0.54	-.2473	.1545	.3681	.1757	1.0791	.4408
2.010	7.17	-4.27	-0.03	0.55	-.3067	.1017	1.8739	.0791	.2937	.5817

TABLE VI.- AERODYNAMIC CHARACTERISTICS OF RETURN COMPONENT IN PRESENCE OF BOMB POD;

$\beta_P = 0^{\circ}$; $\beta_R = -2^{\circ}$

M	α_R, deg	β_R, deg	x_a, in.	z_a, in.	$C_{L,R}$	$C_{D,R}$	$C_{m,R}$	$C_{l,R}$	$C_{n,R}$	$C_{Y,R}$
2.010	0.15	2.09	1.71	2.03	.0693	.0324	-.0012	-.0011	.0056	-.0234
2.010	0.18	2.09	4.23	2.05	.0792	.0320	-.0031	-.0009	.0055	-.0234
2.010	0.09	2.09	7.57	3.31	.0771	.0314	-.0072	-.0007	.0056	-.0234
2.010	0.07	2.09	7.57	5.01	.0718	.0312	-.0065	-.0008	.0057	-.0235
2.010	0.10	2.09	4.22	4.99	.0743	.0314	-.0056	-.0007	.0056	-.0236
2.010	0.17	2.09	0.00	4.96	.0757	.0321	-.0021	-.0010	.0055	-.0235
2.010	0.16	2.09	0.84	4.98	.0765	.0319	-.0030	-.0010	.0055	-.0234
2.010	0.10	2.09	3.92	6.40	.0758	.0316	-.0062	-.0007	.0056	-.0235
2.010	0.07	2.09	7.56	4.98	.0723	.0312	-.0067	-.0008	.0057	-.0236
2.010	0.08	2.09	7.56	3.30	.0771	.0315	-.0076	-.0007	.0056	-.0235
2.010	0.18	2.09	4.20	2.07	.0822	.0321	-.0038	-.0008	.0055	-.0234
2.010	0.18	2.09	1.69	2.04	.0745	.0324	-.0015	-.0011	.0056	-.0234
2.010	0.12	2.08	0.01	2.00	.0626	.0320	-.0008	-.0011	.0057	-.0232
2.010	0.16	2.08	-0.01	2.09	.0676	.0322	.0001	-.0011	.0057	-.0234
2.010	0.23	2.09	1.66	2.13	.0813	.0327	-.0011	-.0011	.0055	-.0235
2.010	0.19	2.09	4.17	2.12	.0869	.0322	-.0049	-.0009	.0055	-.0236
2.010	0.07	2.09	7.52	3.36	.0800	.0315	-.0092	-.0007	.0057	-.0235
2.010	0.06	2.09	7.52	5.00	.0725	.0310	-.0072	-.0008	.0057	-.0236
2.010	0.09	2.09	4.17	5.01	.0792	.0313	-.0078	-.0007	.0057	-.0236
2.010	0.16	2.09	0.82	5.00	.0813	.0319	-.0046	-.0008	.0055	-.0235
2.010	0.18	2.09	-0.01	5.00	.0804	.0321	-.0033	-.0010	.0055	-.0235
2.010	0.07	2.09	0.82	10.00	.0701	.0310	-.0057	-.0007	.0056	-.0235
2.010	0.09	2.09	4.17	10.00	.0689	.0311	-.0045	-.0008	.0056	-.0235
2.010	0.10	2.09	7.52	10.03	.0691	.0313	-.0042	-.0008	.0056	-.0235
2.010	0.09	2.09	7.52	15.05	.0682	.0313	-.0041	-.0008	.0056	-.0235
2.010	0.09	2.09	7.52	10.02	.0678	.0313	-.0040	-.0008	.0056	-.0235
2.010	0.09	2.09	4.18	10.02	.0686	.0312	-.0045	-.0008	.0057	-.0235
2.010	0.08	2.09	0.82	10.02	.0702	.0311	-.0056	-.0008	.0056	-.0235
2.010	0.19	2.09	-0.02	5.04	.0850	.0323	-.0045	-.0010	.0054	-.0235
2.010	0.16	2.09	0.82	5.04	.0859	.0321	-.0061	-.0009	.0054	-.0235
2.010	0.07	2.09	4.18	5.04	.0805	.0313	-.0095	-.0007	.0056	-.0235
2.010	0.05	2.09	7.52	5.03	.0721	.0309	-.0075	-.0008	.0056	-.0235
2.010	0.05	2.08	7.52	3.39	.0802	.0312	-.0105	-.0007	.0057	-.0234
2.010	0.20	2.09	4.18	2.15	.0933	.0324	-.0065	-.0008	.0055	-.0235
2.010	0.27	2.09	1.67	2.16	.0898	.0331	-.0016	-.0010	.0054	-.0236
2.010	0.22	2.09	-0.02	2.13	.0753	.0328	.0008	-.0011	.0057	-.0235
2.010	0.30	2.09	-0.03	2.21	.0882	.0338	.0007	-.0012	.0056	-.0235
2.010	0.30	2.09	1.65	2.23	.0996	.0337	-.0031	-.0010	.0055	-.0236
2.010	0.20	2.09	4.17	2.18	.1003	.0326	-.0090	-.0008	.0054	-.0236
2.010	0.02	2.09	7.53	3.41	.0819	.0308	-.0124	-.0007	.0057	-.0234
2.010	0.05	2.09	7.52	5.06	.0715	.0308	-.0076	-.0008	.0056	-.0236
2.010	0.04	2.09	4.17	5.09	.0830	.0311	-.0116	-.0006	.0057	-.0234
2.010	0.15	2.09	0.81	5.10	.0910	.0320	-.0084	-.0007	.0054	-.0235
2.010	0.18	2.09	-0.03	5.10	.0919	.0324	-.0069	-.0009	.0054	-.0235
2.010	0.07	2.09	0.81	10.05	.0676	.0310	-.0049	-.0007	.0056	-.0235
2.010	0.08	2.09	4.16	10.06	.0667	.0311	-.0042	-.0008	.0056	-.0235
2.010	0.08	2.09	7.52	10.05	.0664	.0313	-.0038	-.0008	.0057	-.0235
2.010	0.08	2.09	7.52	15.08	.0656	.0313	-.0037	-.0008	.0057	-.0235
2.010	0.05	2.09	7.53	5.11	.0719	.0308	-.0077	-.0008	.0056	-.0235
2.010	0.03	2.08	4.17	5.13	.0850	.0309	-.0131	-.0005	.0057	-.0236
2.010	0.14	2.09	0.80	5.13	.0953	.0322	-.0105	-.0006	.0054	-.0235
2.010	0.18	2.09	-0.03	5.15	.0958	.0327	-.0085	-.0009	.0053	-.0233
2.010	0.08	2.09	7.75	15.11	.0660	.0313	-.0038	-.0008	.0057	-.0235
2.010	0.08	2.09	7.53	10.15	.0664	.0313	-.0038	-.0008	.0057	-.0235
2.010	0.08	2.09	4.17	10.16	.0664	.0311	-.0041	-.0008	.0057	-.0235
2.010	0.07	2.09	0.81	10.14	.0672	.0310	-.0049	-.0008	.0056	-.0235
2.010	0.19	2.09	-0.02	0.53	.0662	.0321	.0019	-.0010	.0056	-.0234
2.010	0.32	2.09	1.65	0.57	.0818	.0335	.0038	-.0011	.0056	-.0235
2.010	0.33	2.09	2.46	1.25	.0950	.0338	-.0001	-.0010	.0055	-.0233
2.010	0.17	2.09	-0.03	0.54	.0647	.0321	.0016	-.0010	.0056	-.0234
2.010	0.30	2.09	1.65	0.56	.0803	.0333	.0034	-.0011	.0055	-.0234
2.010	0.32	2.09	2.50	1.21	.0932	.0337	-.0001	-.0010	.0055	-.0232
2.010	0.30	2.09	2.46	1.25	.0913	.0336	-.0001	-.0010	.0055	-.0234
2.010	0.28	2.09	1.66	0.53	.0777	.0331	.0031	-.0011	.0055	-.0235
2.010	0.16	2.09	-0.01	0.51	.0629	.0320	.0014	-.0010	.0056	-.0234
2.010	5.92	2.11	1.70	2.05	.2777	.0642	-.0452	-.0003	.0043	-.0219
2.010	5.98	2.11	4.21	2.09	.2967	.0668	-.0485	-.0001	.0041	-.0219
2.010	5.86	2.11	7.56	3.35	.2936	.0652	-.0538	.0002	.0039	-.0218
2.010	5.83	2.11	7.56	5.04	.2845	.0635	-.0527	.0002	.0040	-.0218
2.010	5.89	2.11	4.22	5.00	.2867	.0646	-.0497	.0001	.0039	-.0219
2.010	5.95	2.11	0.00	4.97	.2806	.0644	-.0449	-.0003	.0040	-.0218
2.010	5.94	2.11	0.84	4.97	.2839	.0647	-.0462	-.0003	.0040	-.0218
2.010	5.88	2.11	4.19	5.01	.2871	.0646	-.0504	.0001	.0038	-.0217
2.010	5.82	2.11	7.55	5.00	.2853	.0634	-.0532	.0002	.0040	-.0218
2.010	5.85	2.11	7.55	3.34	.2938	.0651	-.0544	.0002	.0040	-.0219
2.010	5.99	2.11	4.19	2.10	.2996	.0673	-.0488	-.0001	.0041	-.0219
2.010	5.94	2.11	1.68	2.08	.2807	.0645	-.0453	-.0003	.0043	-.0219
2.010	5.86	2.11	0.00	2.02	.2660	.0623	-.0449	-.0001	.0043	-.0218

TABLE VI.- AERODYNAMIC CHARACTERISTICS OF RETURN COMPONENT IN PRESENCE OF BOMB POD;

$\beta_P = 0^o$; $\beta_R = -2^o$ - Concluded

M	α_R, deg	β_R, deg	x_a, in.	z_a, in.	$C_{L,R}$	$C_{D,R}$	$C_{m,R}$	$C_{l,R}$	$C_{n,R}$	$C_{Y,R}$
2.010	5.91	2.11	-0.01	2.11	.2751	.0636	-.0449	-.0002	.0041	-.0216
2.010	5.99	2.11	1.65	2.15	.2897	.0661	-.0454	-.0003	.0042	-.0219
2.010	6.01	2.11	4.17	2.15	.3048	.0680	-.0495	-.0001	.0041	-.0220
2.010	5.83	2.11	7.52	3.40	.2970	.0653	-.0565	.0002	.0040	-.0219
2.010	5.80	2.11	7.52	5.03	.2858	.0632	-.0544	.0002	.0040	-.0219
2.010	5.87	2.11	4.17	5.02	.2906	.0648	-.0525	.0002	.0038	-.0219
2.010	5.95	2.11	0.82	5.02	.2896	.0654	-.0476	-.0002	.0039	-.0219
2.010	5.96	2.11	-0.01	5.00	.2875	.0655	-.0463	-.0003	.0039	-.0218
2.010	5.82	2.11	0.83	9.97	.2834	.0631	-.0527	.0003	.0040	-.0220
2.010	5.85	2.11	4.17	9.99	.2771	.0629	-.0490	.0002	.0039	-.0220
2.010	5.85	2.11	7.52	10.03	.2763	.0628	-.0486	.0001	.0039	-.0219
2.010	5.85	2.11	7.52	15.06	.2765	.0628	-.0486	.0001	.0039	-.0218
2.010	5.86	2.11	7.52	10.03	.2769	.0630	-.0487	.0001	.0039	-.0218
2.010	5.85	2.11	4.18	10.00	.2769	.0629	-.0490	.0001	.0039	-.0218
2.010	5.82	2.11	0.82	10.03	.2863	.0637	-.0537	.0003	.0040	-.0219
2.010	5.99	2.12	-0.02	5.05	.2929	.0663	-.0469	-.0003	.0038	-.0218
2.010	5.96	2.12	0.82	5.06	.2957	.0664	-.0494	-.0003	.0038	-.0218
2.010	5.85	2.11	4.18	5.05	.2951	.0651	-.0551	.0002	.0038	-.0218
2.010	5.79	2.11	7.52	5.06	.2876	.0631	-.0557	.0003	.0040	-.0218
2.010	5.80	2.11	7.52	3.43	.2995	.0652	-.0589	.0003	.0041	-.0218
2.010	6.03	2.11	4.18	2.20	.3135	.0692	-.0515	.0000	.0040	-.0223
2.010	6.06	2.11	1.67	2.19	.3012	.0683	-.0459	-.0002	.0041	-.0217
2.010	5.99	2.11	-0.02	2.16	.2854	.0655	-.0444	-.0002	.0041	-.0216
2.010	5.76	2.11	7.53	3.44	.3041	.0651	-.0627	.0003	.0041	-.0219
2.010	5.78	2.11	7.53	5.10	.2889	.0629	-.0570	.0003	.0040	-.0219
2.010	5.82	2.11	4.17	5.13	.2998	.0652	-.0580	.0004	.0039	-.0219
2.010	5.97	2.12	0.81	5.13	.3016	.0670	-.0508	-.0002	.0037	-.0217
2.010	6.00	2.12	-0.03	5.10	.2995	.0670	-.0483	-.0004	.0038	-.0219
2.010	5.80	2.11	0.81	10.05	.2823	.0626	-.0533	.0004	.0040	-.0218
2.010	5.85	2.11	4.16	10.06	.2766	.0627	-.0491	.0002	.0039	-.0217
2.010	5.86	2.11	7.52	10.07	.2777	.0630	-.0488	.0002	.0039	-.0217
2.010	5.86	2.11	7.52	15.09	.2773	.0629	-.0487	.0002	.0039	-.0217
2.010	5.76	2.11	7.53	5.15	.2883	.0626	-.0578	.0003	.0039	-.0216
2.010	5.80	2.11	4.17	5.16	.3037	.0653	-.0608	.0006	.0039	-.0219
2.010	5.95	2.11	0.81	5.17	.3097	.0677	-.0542	-.0002	.0039	-.0219
2.010	5.97	2.11	-0.02	5.18	.3090	.0678	-.0529	-.0003	.0040	-.0222
2.010	5.85	2.11	7.53	15.14	.2758	.0627	-.0485	.0001	.0039	-.0217
2.010	5.85	2.11	7.53	10.18	.2762	.0628	-.0485	.0001	.0039	-.0218
2.010	5.84	2.11	4.17	10.16	.2766	.0626	-.0493	.0001	.0038	-.0217
2.010	5.80	2.11	0.81	10.14	.2819	.0627	-.0536	.0003	.0040	-.0217
2.010	5.92	2.11	-0.03	0.53	.2718	.0632	-.0433	-.0002	.0039	-.0216
2.010	6.05	2.11	1.64	0.55	.2835	.0656	-.0405	-.0003	.0040	-.0216
2.010	6.09	2.11	2.49	1.22	.2972	.0679	-.0427	-.0003	.0039	-.0213
2.010	5.90	2.11	-0.03	0.51	.2683	.0624	-.0432	-.0001	.0039	-.0216
2.010	6.02	2.11	1.65	0.52	.2806	.0649	-.0408	-.0003	.0040	-.0215
2.010	6.07	2.11	2.49	1.23	.2942	.0673	-.0428	-.0003	.0040	-.0215
2.010	6.05	2.11	2.49	1.23	.2928	.0669	-.0433	-.0003	.0040	-.0215
2.010	6.01	2.11	1.66	0.54	.2795	.0647	-.0413	-.0003	.0039	-.0215
2.010	5.91	2.11	-0.03	0.54	.2707	.0628	-.0439	-.0001	.0038	-.0216

TABLE VII.- AERODYNAMIC CHARACTERISTICS OF BOMB POD IN PRESENCE OF RETURN COMPONENT;

$\beta_P = 0^o$; $\beta_R = -2^o$

M	α_P, deg	β_P, deg	x_a, in.	z_a, in.	$C_{L,P}$	$C_{D,P}$	$C_{m,P}$	$C_{l,P}$	$C_{n,P}$	$C_{Y,P}$
2.010	13.08	0.07	1.71	2.03	.9322	.4078	.3975	-.0219	-.2388	-.0137
2.010	12.95	0.04	4.23	2.05	.9180	.4206	-.8942	-.0489	-.3475	.0547
2.010	12.91	-0.01	7.57	3.31	1.0357	.4996	-1.6469	.0120	.0874	.0598
2.010	12.98	0.06	7.57	5.01	1.0433	.4661	-.6119	.0159	-.0469	-.0406
2.010	13.07	0.05	4.22	4.99	1.1773	.4936	.0601	.0014	-.0675	-.0236
2.010	10.98	0.03	0.00	4.96	.9614	.4163	-.4782	-.0033	.0133	-.0094
2.010	10.96	0.02	0.84	4.98	.9237	.4068	-.3472	-.0211	-.0503	.0273
2.010	8.41	0.04	3.92	6.40	.8372	.3711	.3232	-.0085	-.0986	-.0009
2.010	10.90	0.04	7.56	4.98	.7576	.3617	-.5607	-.0211	-.1886	.0243
2.010	10.86	0.00	7.56	3.30	.7684	.4020	-1.5122	.0226	.1014	.0381
2.010	10.86	0.03	4.20	2.07	.6539	.3359	-.8486	-.0429	-.2983	.0663
2.010	10.98	0.05	1.69	2.04	.5668	.2954	.7405	-.0432	-.3399	.0338
2.010	11.03	0.06	0.01	2.00	.8236	.3679	.1297	-.0319	-.2202	.0036
2.010	5.77	0.04	-0.01	2.09	.1722	.2080	.6107	-.0257	-.2069	.0238
2.010	5.72	0.03	1.66	2.13	-.0124	.1759	.9602	-.0387	-.3411	.0713
2.010	5.64	0.02	4.17	2.12	.2240	.2312	-.9200	-.0175	-.1027	.0515
2.010	5.65	0.01	7.52	3.36	.3113	.2656	-1.1534	.0233	.3028	-.0228
2.010	5.72	0.03	7.52	5.00	.2795	.2331	-.6043	-.0164	-.0970	.0309
2.010	5.79	0.04	4.17	5.01	.2029	.2240	.5571	-.0183	-.1348	.0220
2.010	5.80	0.03	0.82	5.00	.3196	.2381	.0755	-.0112	-.0584	.0165
2.010	5.79	0.03	-0.01	5.00	.3455	.2430	-.0515	-.0097	-.0419	.0114
2.010	5.82	0.03	0.82	10.00	.4737	.2606	-.3261	-.0097	-.0367	.0050
2.010	5.81	0.04	4.17	10.00	.4742	.2621	-.4463	-.0109	-.0470	.0005
2.010	5.77	0.04	7.52	10.03	.3780	.2478	-.1652	-.0100	-.0428	-.0010
2.010	0.68	0.03	7.52	15.05	.0690	.1933	-.1535	-.0059	-.0206	.0030
2.010	0.71	0.04	7.52	10.02	-.0551	.1903	.3000	-.0061	-.0784	.0079
2.010	0.68	0.03	4.18	10.02	.0561	.1932	-.1200	-.0061	-.0319	-.0003
2.010	0.69	0.04	0.82	10.02	.0424	.1973	.0188	-.0057	-.0255	-.0031
2.010	0.67	0.03	-0.02	5.04	-.1204	.1895	.5877	-.0061	-.1183	.0225
2.010	0.67	0.03	0.82	5.04	-.1332	.1861	.5911	-.0063	-.1328	.0266
2.010	0.66	0.03	4.18	5.04	-.2700	.1885	1.0173	-.0003	-.1443	.0304
2.010	0.60	0.02	7.52	5.03	-.0374	.2138	-.5615	-.0006	.0337	.0103
2.010	0.55	0.01	7.52	3.39	-.0887	.2303	-.6225	.0031	.3538	-.0417
2.010	0.53	0.02	4.18	2.15	-.1388	.2282	-.6999	-.0014	.0017	.0291
2.010	0.62	0.03	1.67	2.16	-.4118	.1938	1.2352	-.0003	-.1887	.0485
2.010	0.65	0.04	-0.02	2.13	-.3676	.1738	1.3893	-.0069	-.2916	.0554
2.010	-4.46	0.04	-0.03	2.21	-.9577	.2809	2.5577	.0535	-.5074	.1000
2.010	-4.55	0.03	1.65	2.23	-.8415	.3056	1.6273	.0178	-.1267	.0397
2.010	-4.58	0.02	4.17	2.18	-.5606	.3095	-.3086	-.0113	.0647	.0089
2.010	-4.54	0.02	7.53	3.41	-.5312	.2983	-.0610	-.0205	.1907	-.0220
2.010	-4.52	0.02	7.52	5.06	-.3837	.2722	-.3870	-.0116	.1390	-.0201
2.010	-4.47	0.03	4.17	5.09	-.6431	.2746	1.2444	.0109	-.1180	.0286
2.010	-4.46	0.03	0.81	5.10	-.5421	.2396	1.0666	.0095	-.1027	.0229
2.010	-4.46	0.03	-0.03	5.10	-.5288	.2443	1.0631	.0127	-.1452	.0313
2.010	-4.43	0.03	0.81	10.05	-.3385	.2435	.2764	.0027	-.0329	-.0003
2.010	-4.44	0.04	4.16	10.06	-.3447	.2416	.2330	.0027	-.0337	-.0044
2.010	-4.42	0.03	7.52	10.05	-.4298	.2458	.5560	.0078	-.0935	.0147
2.010	-4.44	0.03	7.52	15.08	-.3314	.2474	.2144	.0024	-.0296	.0030
2.010	-7.63	0.02	7.53	5.11	-.6822	.3577	-.2251	-.0268	.1988	-.0347
2.010	-7.56	0.03	4.17	5.13	-.8898	.3635	1.2427	.0137	-.0905	.0171
2.010	-7.51	0.03	0.80	5.13	-.8316	.3203	1.3160	.0069	-.0369	.0051
2.010	-7.54	0.03	-0.03	5.15	-.8240	.3292	1.3443	.0151	-.0992	.0179
2.010	-9.60	0.03	7.75	15.11	-.8359	.3998	.5272	.0016	-.0065	-.0055
2.010	-9.52	0.04	7.53	10.15	-.9553	.3993	.9493	.0027	-.0084	-.0134
2.010	-9.63	0.03	4.17	10.16	-.9964	.3986	.8437	-.0058	.0414	-.0152
2.010	-9.61	0.04	0.81	10.14	-.7980	.3892	.3967	.0020	-.0102	-.0104
2.010	-0.93	0.05	-0.02	0.53	-.3841	.2051	.6148	.0030	-.5509	.0961
2.010	-1.01	0.03	1.65	0.57	-.3272	.2353	-.3178	-.0031	-.2007	.0554
2.010	-0.97	0.02	2.46	1.25	-.4257	.2296	.0405	-.0104	-.0378	.0249
2.010	0.08	0.05	-0.03	0.54	-.3432	.1984	.7225	-.0011	-.5526	.0969
2.010	0.01	0.03	1.65	0.56	-.2738	.2302	-.2579	-.0065	-.1956	.0480
2.010	0.06	0.02	2.50	1.21	-.3325	.2234	-.1210	-.0114	-.0575	.0276
2.010	1.08	0.03	2.46	1.25	-.2528	.2045	-.1283	-.0133	-.0983	.0320
2.010	1.05	0.03	1.66	0.53	-.1942	.2137	-.2795	-.0156	-.2025	.0478
2.010	1.09	0.05	-0.01	0.51	-.2693	.1807	.6876	-.0162	-.5533	.0966
2.010	13.01	0.05	1.70	2.05	.4279	.2601	1.5192	-.0300	-.1897	.0108
2.010	12.73	0.00	4.21	2.09	.4041	.2698	-1.2889	-.0013	.0527	.0492
2.010	12.69	-0.03	7.56	3.35	.4639	.3680	-1.8381	.0611	.3072	.0474
2.010	12.81	0.03	7.56	5.04	.5727	.3194	-.6753	.0123	.0096	.0009
2.010	13.07	0.04	4.22	5.00	.5840	.3379	2.0290	-.0172	-.1856	.0218
2.010	10.99	0.04	0.00	4.97	.9029	.3675	.4530	-.0090	-.0520	-.0044
2.010	11.01	0.04	0.84	4.97	.6450	.3211	1.0390	-.0062	-.0437	-.0035
2.010	10.93	0.03	4.19	5.01	.3546	.2570	1.5388	-.0175	-.1343	.0255
2.010	10.75	0.01	7.55	5.00	.3683	.2570	-.6918	.0284	.1819	-.0018
2.010	10.68	-0.02	7.55	3.34	.2857	.3105	-1.6371	.0396	.2515	.0391
2.010	10.67	0.00	4.19	2.10	.1879	.2247	-1.0341	.0033	.0852	.0320
2.010	10.88	0.04	1.68	2.08	.0932	.1866	1.7337	-.0298	-.1139	.0008
2.010	11.01	0.04	0.00	2.02	.2249	.2271	2.3744	-.0701	-.3240	.0478

TABLE VII.- AERODYNAMIC CHARACTERISTICS OF BOMB POD IN PRESENCE OF RETURN COMPONENT;

$\beta_P = 0^o$; $\beta_R = -2^o$ - Concluded

M	α_P, deg	β_P, deg	x_a, in.	z_a, in.	$C_{L,P}$	$C_{D,P}$	$C_{m,P}$	$C_{l,P}$	$C_{n,P}$	$C_{Y,P}$
2.010	5.78	0.03	-0.01	2.11	-.5906	.0774	3.4544	-.0295	-.2412	.0525
2.010	5.67	0.03	1.65	2.15	-.4907	.1203	2.1473	-.0073	-.0033	-.0046
2.010	5.52	0.01	4.17	2.15	-.2477	.1778	-.6594	.0001	.1234	.0045
2.010	5.50	0.00	7.52	3.40	-.1018	.2335	-1.1835	.0010	.0349	.0590
2.010	5.63	0.01	7.52	5.03	-.0967	.1734	-.1292	.0305	.2513	-.0131
2.010	5.77	0.03	4.17	5.02	-.2916	.1365	1.9274	-.0143	-.1202	.0298
2.010	5.84	0.03	0.82	5.02	-.1000	.1413	2.1015	-.0185	-.2158	.0439
2.010	5.82	0.03	-0.01	5.00	.1266	.1876	1.0917	-.0047	-.0655	.0136
2.010	5.85	0.04	0.83	9.97	.5062	.2814	-.5015	-.0090	-.0277	-.0042
2.010	5.82	0.04	4.17	9.99	.4418	.2704	-.2582	-.0105	-.0459	-.0018
2.010	5.82	0.04	7.52	10.03	.0923	.1933	1.3725	-.0130	-.0987	.0052
2.010	0.66	0.03	7.52	15.06	.0755	.2140	-.1854	-.0061	-.0275	-.0009
2.010	0.76	0.04	7.52	10.03	-.4563	.1503	2.2557	-.0033	-.1258	.0175
2.010	0.72	0.03	4.18	10.00	.0160	.1960	.1461	-.0055	-.0208	-.0021
2.010	0.69	0.04	0.82	10.03	.0555	.2038	-.0298	-.0060	-.0419	.0007
2.010	0.73	0.03	-0.02	5.05	-.5349	.1226	2.6823	-.0040	-.2310	.0459
2.010	0.74	0.03	0.82	5.06	-.7649	.1111	3.6889	.0075	-.2969	.0628
2.010	0.66	0.03	4.18	5.05	-.6404	.1750	1.9734	.0026	-.0595	.0218
2.010	0.54	0.02	7.52	5.06	-.5239	.1982	.5903	.0037	.2368	-.0368
2.010	0.39	0.01	7.52	3.43	-.4707	.2524	-.7624	-.0027	-.0994	.0577
2.010	0.40	0.01	4.18	2.20	-.6731	.2396	-.1373	.0068	.2122	-.0114
2.010	0.55	0.03	1.67	2.19	-.9705	.1857	2.6171	.0061	.1300	-.0217
2.010	0.66	0.03	-0.02	2.16	-1.1270	.1256	4.3110	.0058	-.1401	.0351
2.010	-4.72	0.02	7.53	3.44	-.9928	.3502	-.4037	-.0053	.0502	.0091
2.010	-4.59	0.02	7.53	5.10	-1.0516	.3086	1.3544	-.0055	.0287	.0046
2.010	-4.54	0.02	4.17	5.13	-1.0458	.2909	2.2982	.0018	.0283	.0045
2.010	-4.36	0.03	0.81	5.13	-1.4222	.2264	5.3854	.0335	-.2489	.0498
2.010	-4.34	0.04	-0.03	5.10	-1.2459	.2108	4.6906	.0509	-.3599	.0686
2.010	-4.42	0.03	0.81	10.05	-.3444	.2571	.3684	.0038	-.0439	.0045
2.010	-4.43	0.03	4.16	10.06	-.4175	.2472	.6589	-.0067	.0307	-.0096
2.010	-4.37	0.04	7.52	10.07	-.9046	.2520	2.8613	.0064	-.0902	.0110
2.010	-4.47	0.03	7.52	15.09	-.2908	.2598	.0393	-.0033	-.0301	.0016
2.010	-7.71	0.04	7.53	5.15	-1.4710	.4334	1.7473	-.0308	.1296	-.0390
2.010	-7.60	0.03	4.17	5.16	-1.3245	.3996	2.3805	.0063	.0236	.0018
2.010	-7.40	0.04	0.81	5.17	-1.7078	.3801	6.0040	.0410	-.1519	.0266
2.010	-7.43	0.04	-0.02	5.18	-1.6590	.3535	5.5185	.0561	-.3196	.0564
2.010	-9.60	0.04	7.53	15.14	-.8089	.4025	.4309	-.0033	-.0102	-.0100
2.010	-9.61	0.04	7.53	10.18	-1.3794	.4544	2.9569	.0063	-.0394	-.0074
2.010	-9.61	0.04	4.17	10.16	-1.0322	.3882	1.5542	.0028	.0310	-.0169
2.010	-9.60	0.04	0.81	10.14	-.8434	.3996	.6794	.0042	-.0198	-.0078
2.010	5.14	0.04	-0.03	0.53	-.4770	.0995	1.7212	-.0364	-.3093	.0473
2.010	5.02	0.04	1.64	0.55	-.3506	.1698	-.0743	-.0174	-.0684	.0053
2.010	5.06	0.03	2.49	1.22	-.4548	.1540	.3144	.0004	.0605	-.0206
2.010	6.19	0.04	-0.03	0.51	-.4184	.1159	1.7650	-.0450	-.3353	.0557
2.010	6.08	0.04	1.65	0.52	-.2857	.1797	-.0780	-.0115	-.0533	.0010
2.010	6.06	0.03	2.49	1.23	-.3821	.1550	.3096	-.0001	.0455	-.0128
2.010	7.06	0.03	2.49	1.23	-.3011	.1438	.2428	-.0051	.0004	-.0013
2.010	7.07	0.04	1.66	0.54	-.2308	.1639	-.0323	-.0154	-.0765	-.0021
2.010	7.16	0.04	-0.03	0.54	-.3550	.0922	1.7939	-.0536	-.3597	.0562

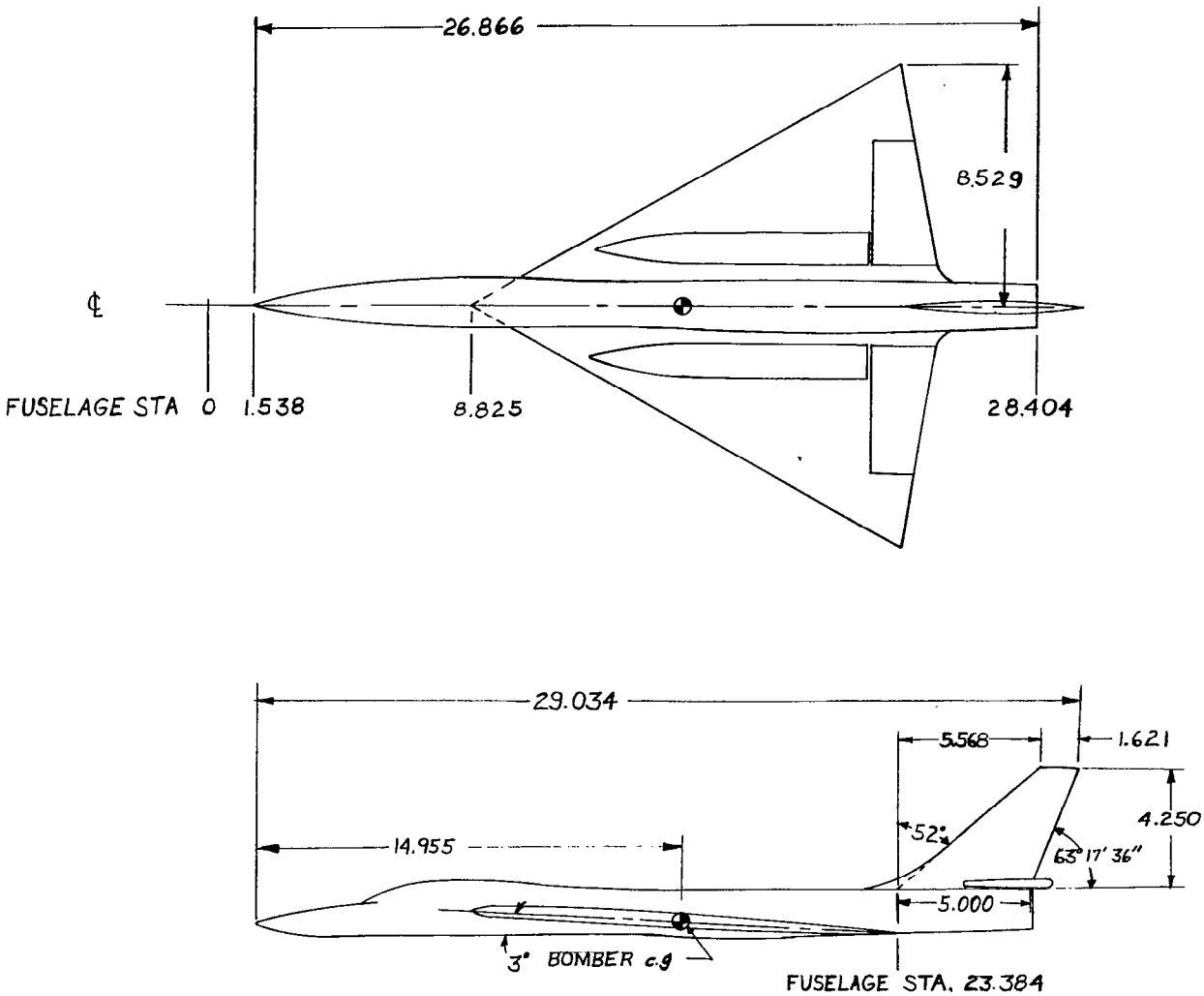

(a) Supersonic bomber without nacelles.

Figure 1.- Supersonic bomber. All dimensions are in inches.

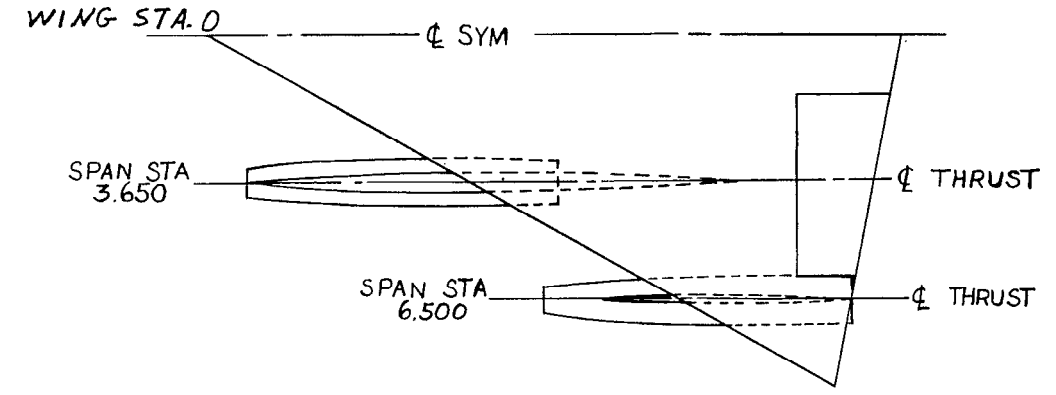

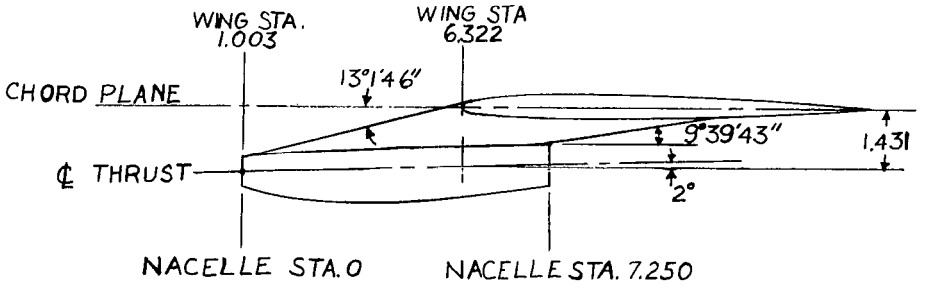

INBOARD NACELLE

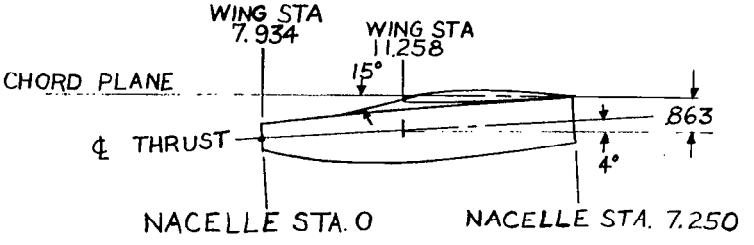

OUTBOARD NACELLE

(b) Nacelles.

Figure 1.- Continued.

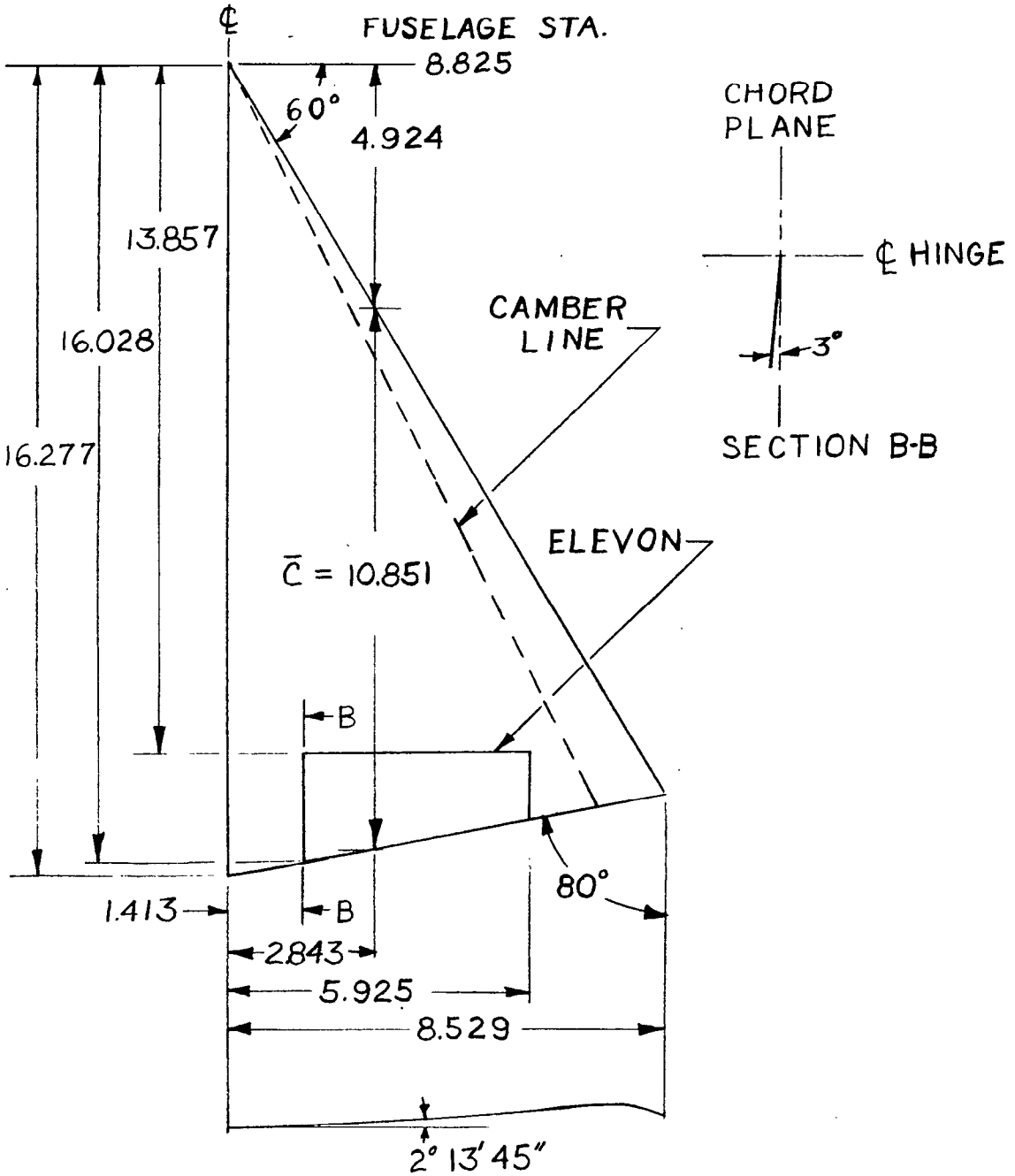

(c) Wing.

Figure 1.- Concluded.

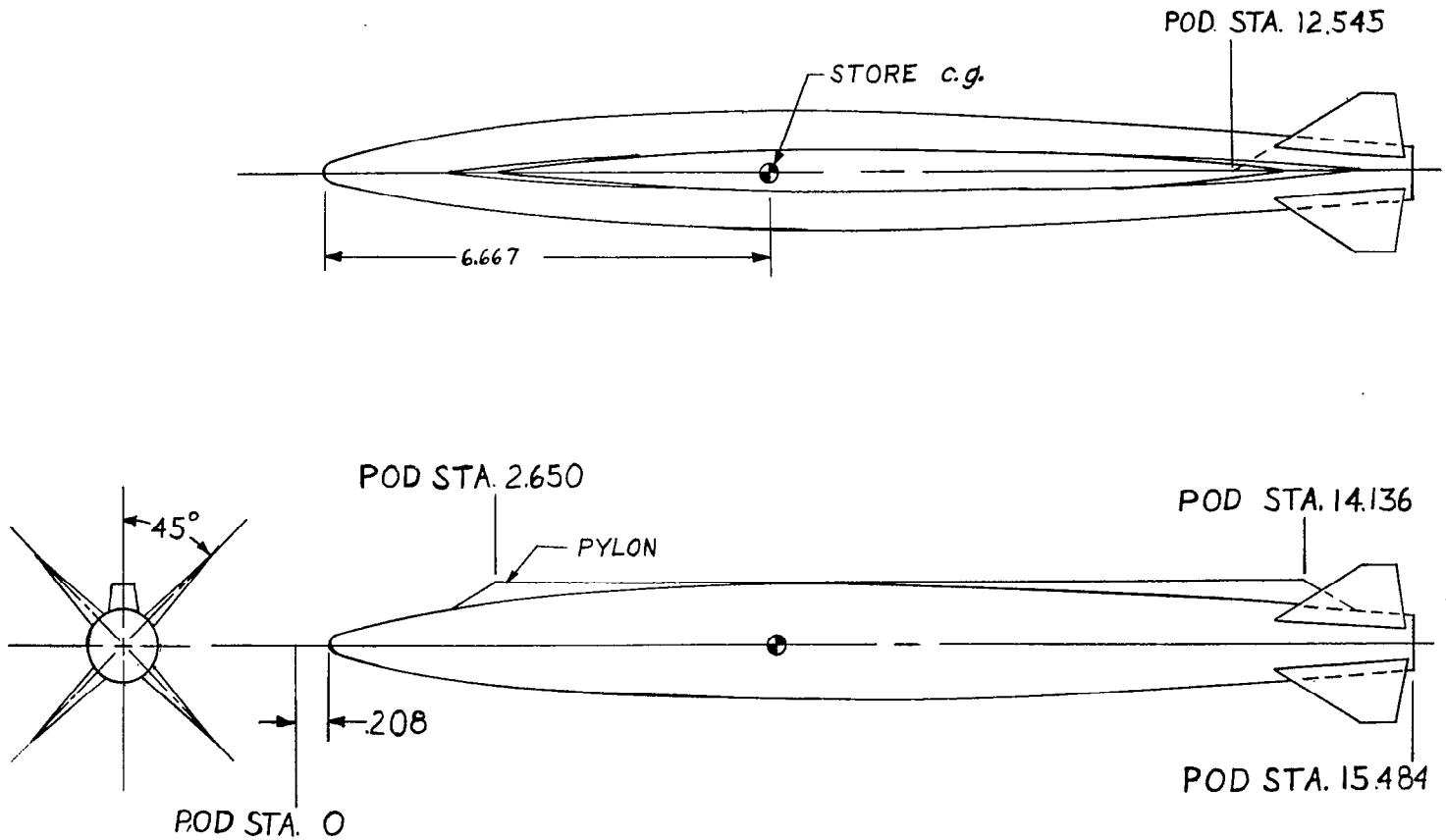

Figure 2.- Three-view drawing of store model. All dimensions in inches.

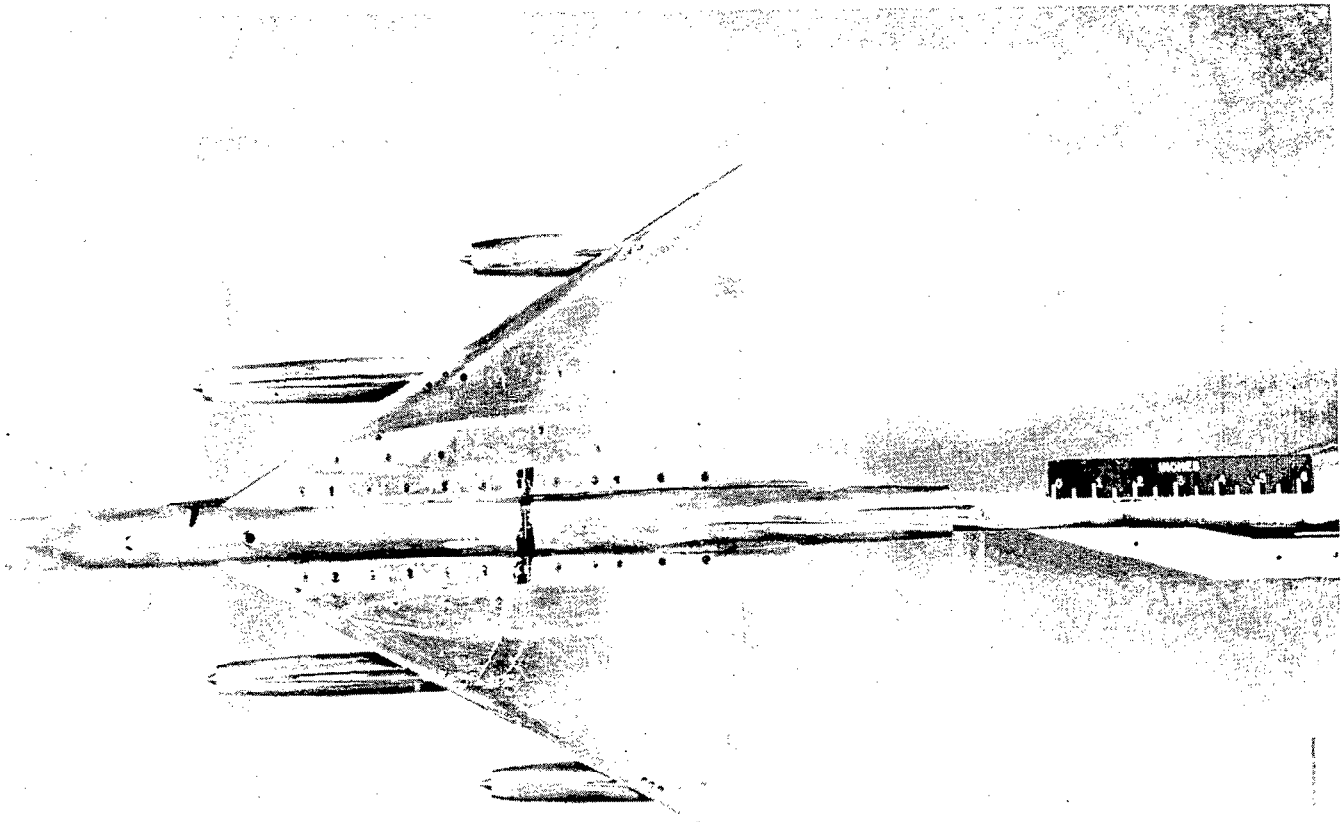

(a) Top view. L-57-16

Figure 3.- Photographs of a 1/40-scale model of a supersonic bomber and store.

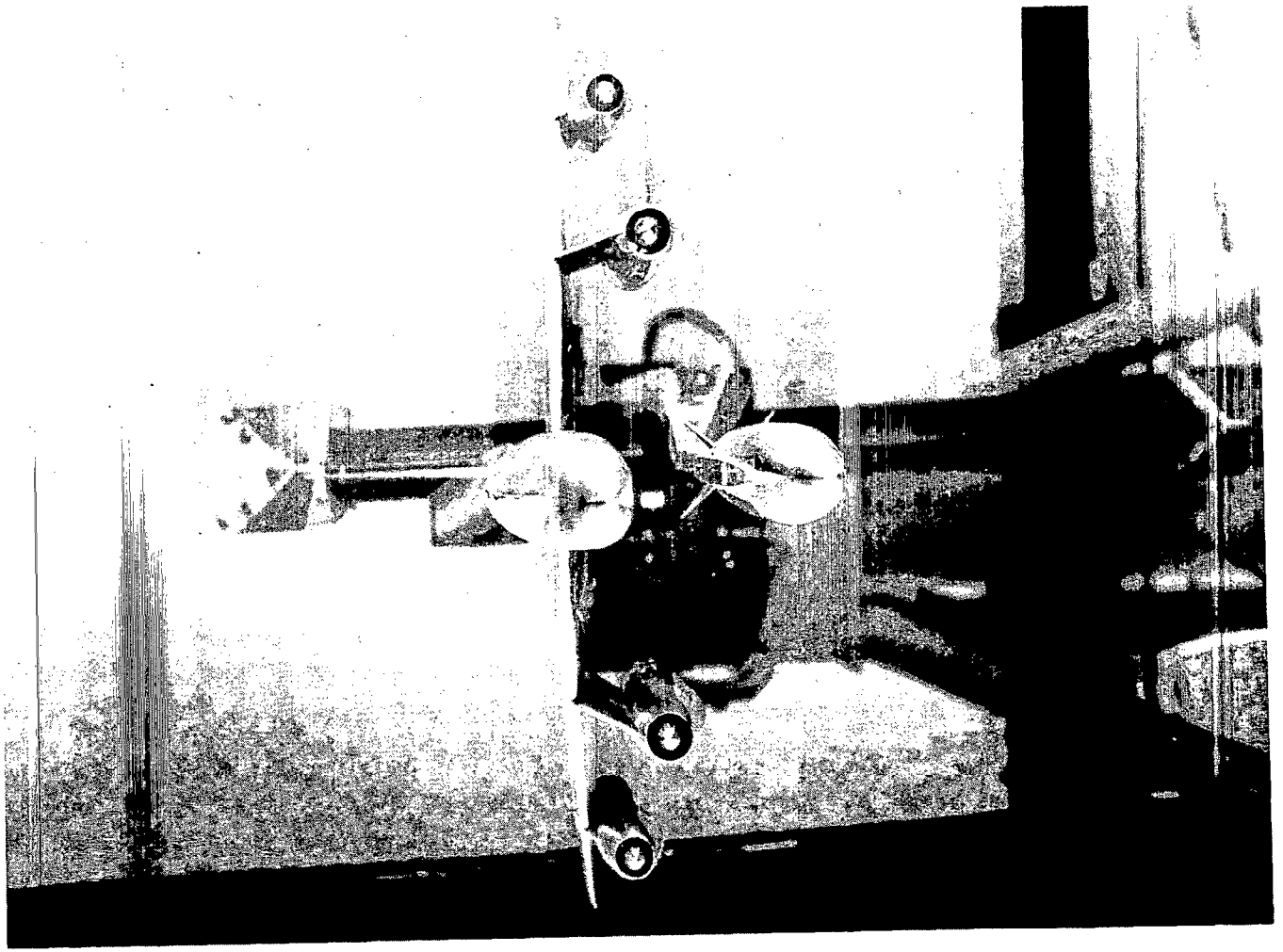

(b) Front view. L-57-18

Figure 3.- Continued.

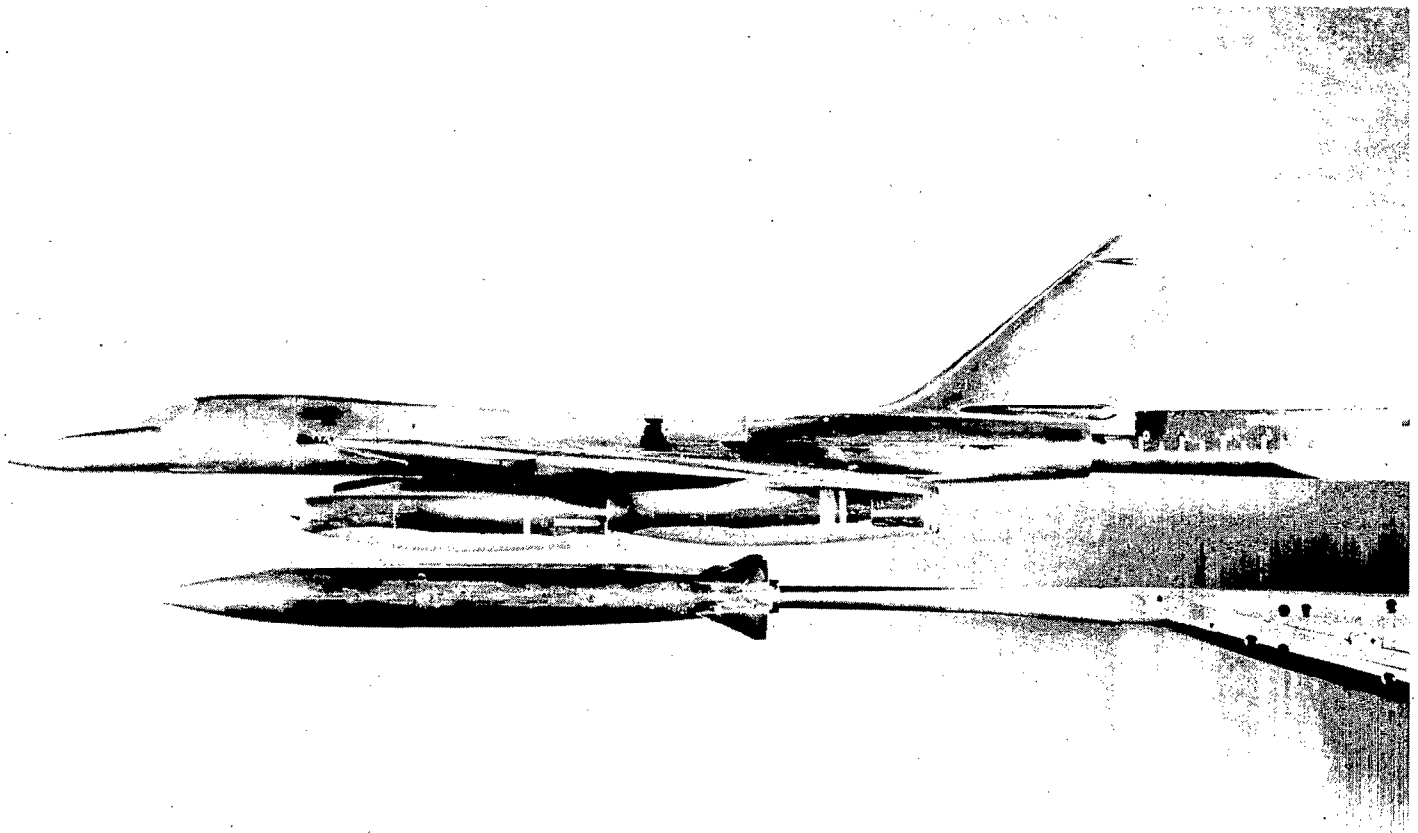

(c) Side view. L-57-20

Figure 3.- Continued.

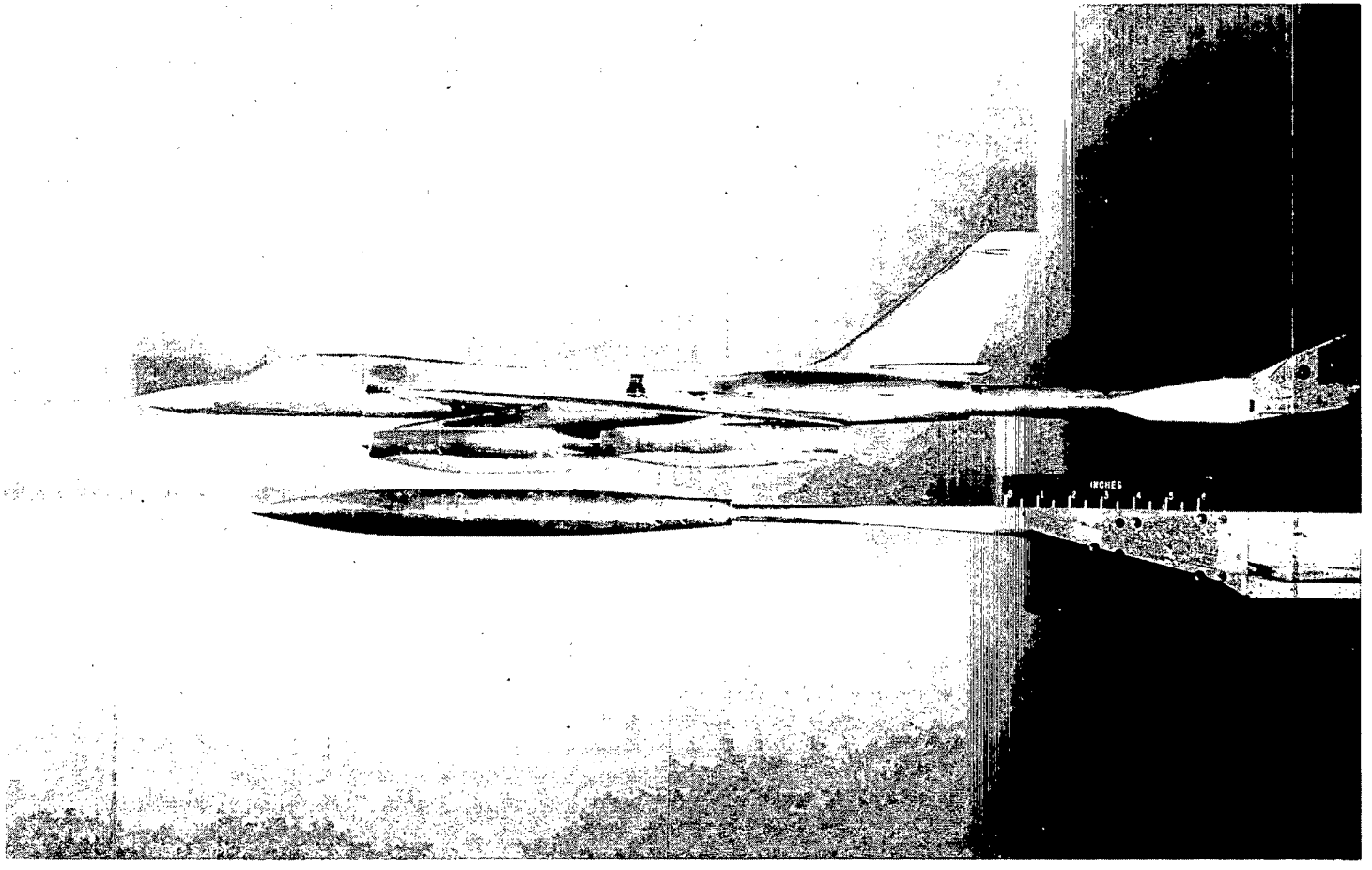

(d) Side view with bomb-pod fins removed. L-57-19

Figure 3.- Continued.

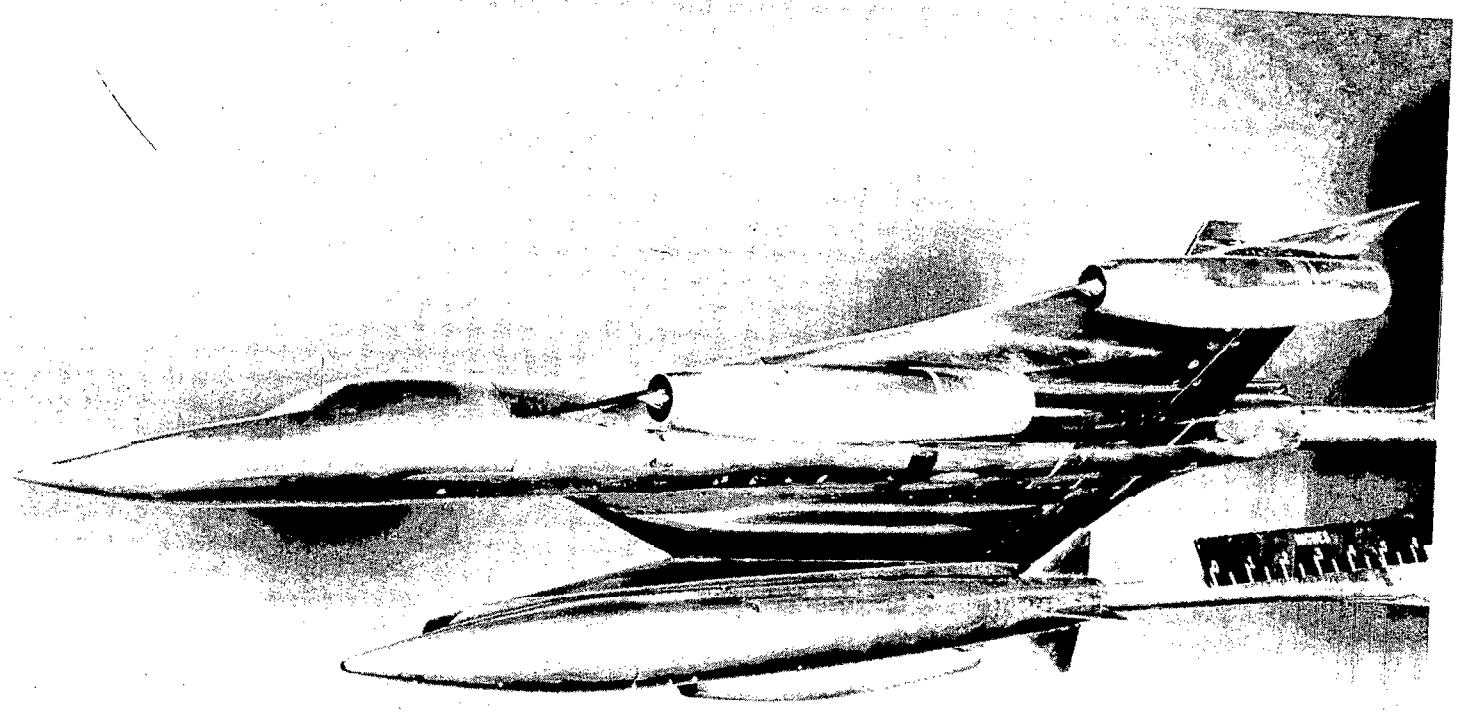

(e) Three-quarter front view. L-57-22

Figure 3.- Continued.

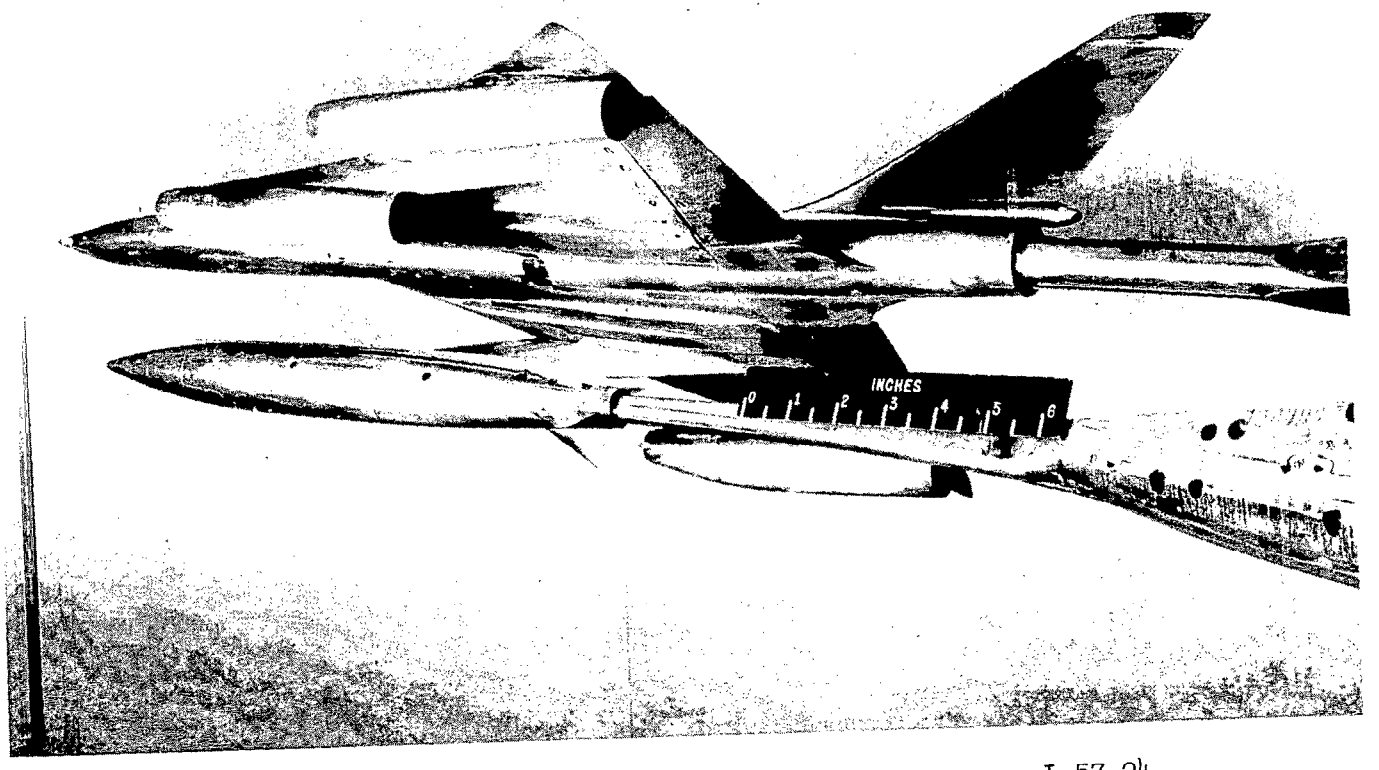

(f) Three-quarter rear view. L-57-24

Figure 3.- Concluded.

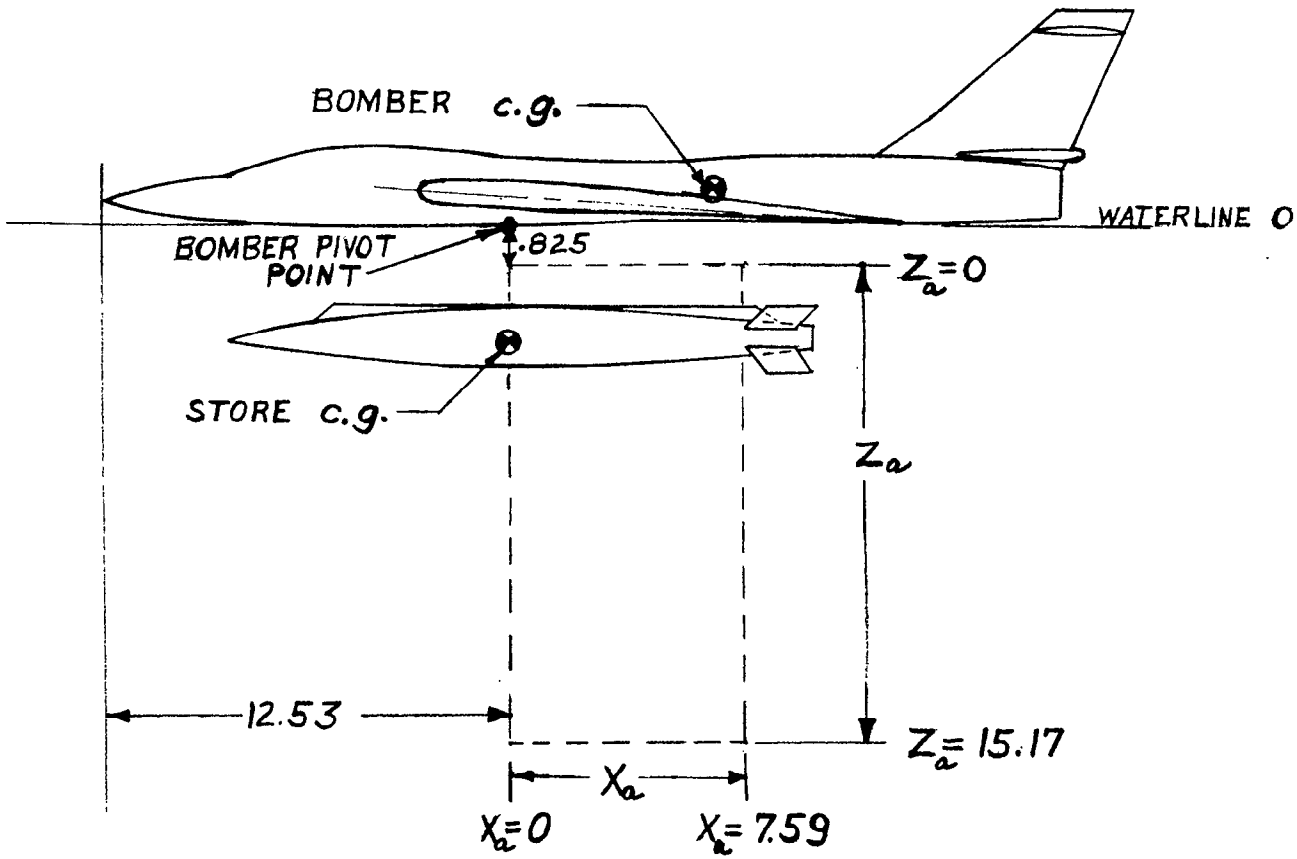

Figure 4.- Test field for store model. All dimensions in inches.

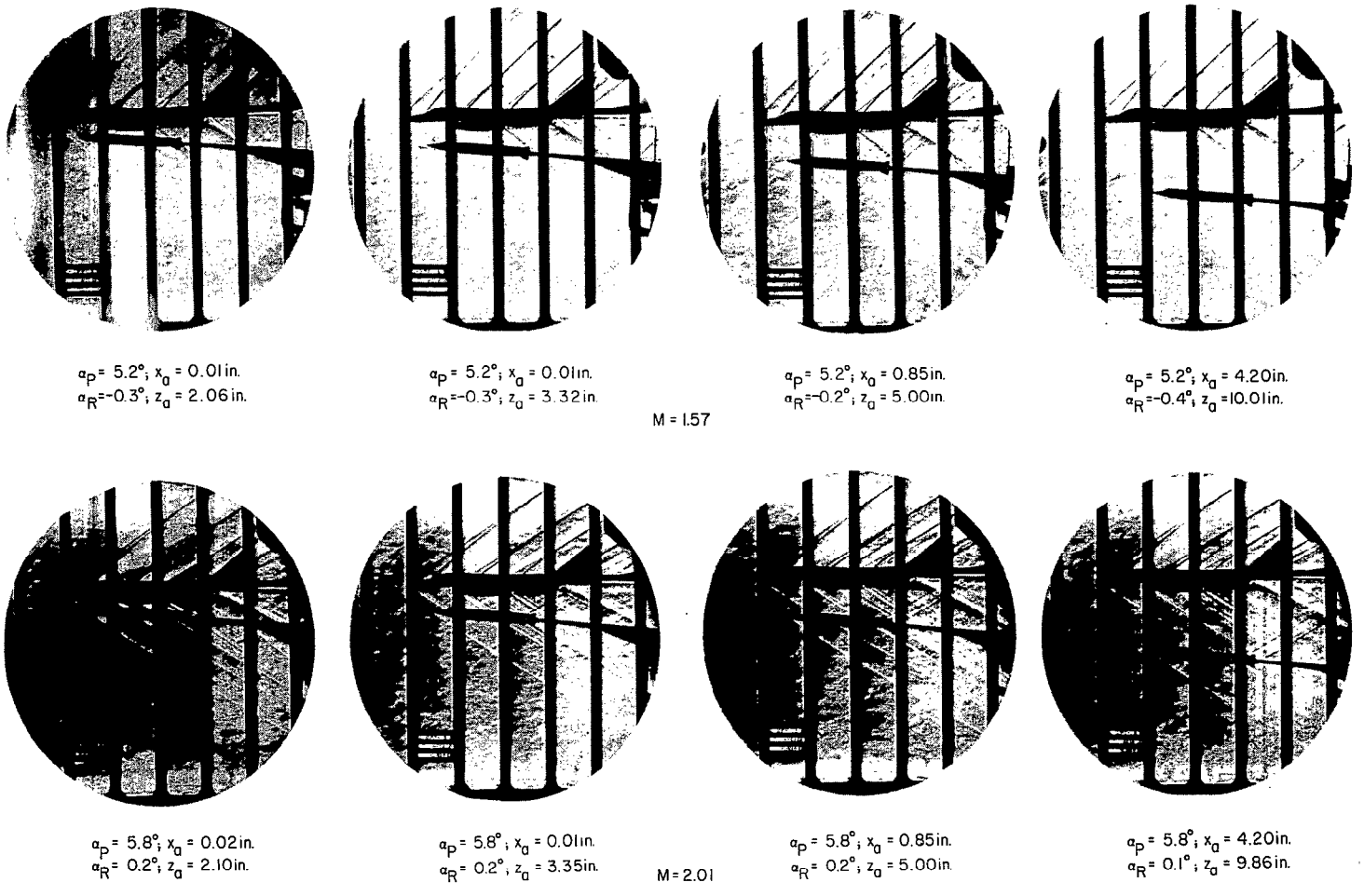

L-57-2798

Figure 5.- Typical schlieren photographs of a supersonic bomber configuration and store in Unitary Plan wind tunnel.

$\alpha_P = 12.4°$; $x_a = 0.89$in.
$\alpha_R = 1.5°$; $z_a = 2.01$in.

$\alpha_P = 10.3°$; $x_a = 0.87$in.
$\alpha_R = 1.6°$; $z_a = 1.85$in.

$\alpha_P = 5.1°$; $x_a = 0.84$in.
$\alpha_R = 1.6°$; $z_a = 2.07$in.

$\alpha_P = -5.0°$; $x_a = 0.01$in.
$\alpha_R = 1.7°$; $z_a = 3.42$in.

M=1.57

$\alpha_P = 11.0°$; $x_a = 0.87$in.
$\alpha_R = 2.2°$; $z_a = 2.03$in.

$\alpha_P = 5.8°$; $x_a = 0.01$in.
$\alpha_R = 2.2°$; $z_a = 2.09$in.

$\alpha_P = -4.4°$; $x_a = 0$in.
$\alpha_R = 2.4°$; $z_a = 3.45$in.

M=2.01

Figure 5.- Continued. L-57-2799

$\alpha_P = 10.4°$; $x_a = 0.87$in.
$\alpha_R = -0.2°$; $z_a = 4.98$in.

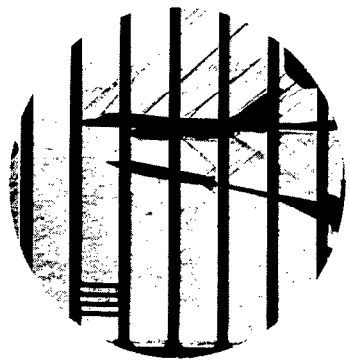

$\alpha_P = 10.4°$; $x_a = 0.87$in.
$\alpha_R = 1.7°$; $z_a = 4.98$in.

M = 1.57

$\alpha_P = 10.3°$; $x_a = 0.86$in.
$\alpha_R = 5.3°$; $z_a = 4.99$in.

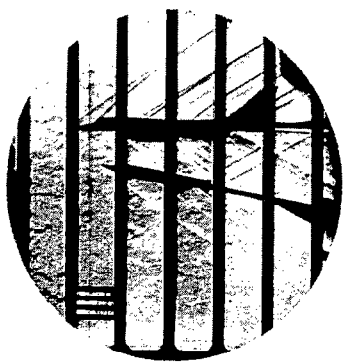

$\alpha_P = 10.9°$; $x_a = 0.86$in.
$\alpha_R = 0.2°$; $z_a = 4.99$in.

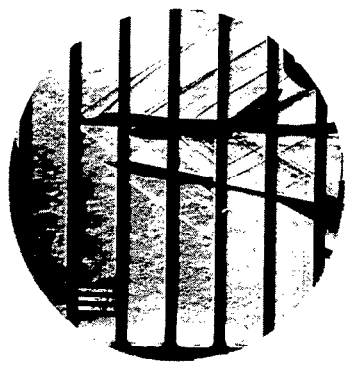

$\alpha_P = 10.9°$; $x_a = 0.86$in.
$\alpha_R = 2.2°$; $z_a = 4.99$in.

M = 2.01

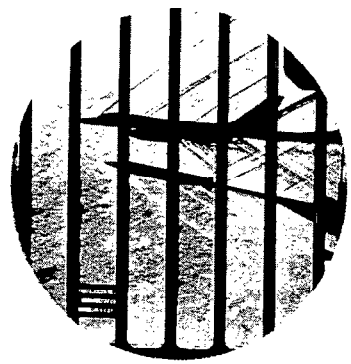

$\alpha_P = 11.0°$; $x_a = 0.86$in.
$\alpha_R = 4.3°$; $z_a = 5.00$in.

$\alpha_P = 11.0°$; $x_a = 0.87$in.
$\alpha_R = 5.9°$; $z_a = 4.97$in.

Figure 5.- Concluded. L-57-2800

NACA - Langley Field, Va.

~~SECRET~~

[redacted]

WIND-TUNNEL INVESTIGATION OF MUTUAL INTERFERENCE LOADS ON A SUPERSONIC BOMBER CONFIGURATION AND STORE DURING SEPARATION AT MACH NUMBERS OF 1.57, 1.77, AND 2.01

COORD. NO. AF-AM-91

By Owen G. Morris and Kenneth L. Turner

ABSTRACT

Presented are data on mutual interference loads of a supersonic bomber configuration and store during separation of the store. The bomber configuration had a delta wing with 60° sweepback of the leading edge, aspect ratio of 2.096, taper ratio of 0, and a dihedral of 2.23°. The data are presented in tabular form without discussion or analysis.

INDEX HEADINGS

Stores - Airplane Components	1.7.1.1.5
Airplanes - Specific Types	1.7.1.2
Missiles - Components in Combination	1.7.2.1

~~SECRET~~

[redacted]