Library Copy
A21L102
R01

SECURITY INFORMATION

c. 2

[redacted]

Copy 44
RM SL53E18

R.A. A21L102
R01

[redacted]

NACA

UNAVAILABLE REMOVED PER LETTER DTD 1-25-85
SIGNED BY BILLY J. SMITH. skm 2-21-85

RESEARCH MEMORANDUM

for the

Bureau of Aeronautics, Department of the Navy

CLASSIFICATION CANCELLED
Authority Naca Res. abs. + Date 1-10-59
RN-111
By MB 1-29-59 See

FLIGHT INVESTIGATION OF THE STABILITY AND CONTROL CHARACTERISTICS OF A 0.13-SCALE MODEL OF THE CONVAIR XFY-1 VERTICALLY RISING AIRPLANE DURING CONSTANT-ALTITUDE TRANSITIONS

TED NO. NACA DE 368

By Powell M. Lovell, Jr., Robert H. Kirby,
and Charles C. Smith, Jr.

Langley Aeronautical Laboratory
Langley Field, Va.

CLASSIFIED DOCUMENT

This material contains information affecting the National Defense of the United States within the meaning of the espionage laws, Title 18, U.S.C., Secs. 793 and 794, the transmission or revelation of which in any manner to an unauthorized person is prohibited by law.

NATIONAL ADVISORY COMMITTEE
FOR AERONAUTICS
WASHINGTON

MAY 21 1953

[redacted]

NASA Technical Library
3 1176 01438 5992

NATIONAL ADVISORY COMMITTEE FOR AERONAUTICS

RESEARCH MEMORANDUM

for the

Bureau of Aeronautics, Department of the Navy

FLIGHT INVESTIGATION OF THE STABILITY AND CONTROL CHARACTERISTICS OF A 0.13-SCALE MODEL OF THE CONVAIR XFY-1 VERTICALLY RISING AIRPLANE DURING CONSTANT-ALTITUDE TRANSITIONS

TED NO. NACA DE 368

By Powell M. Lovell, Jr., Robert H. Kirby,
and Charles C. Smith, Jr.

SUMMARY

An investigation is being conducted to determine the dynamic stability and control characteristics of a 0.13-scale flying model of the Convair XFY-1 vertically rising airplane. This paper presents the results of flight tests to determine the stability and control characteristics of the model during constant-altitude slow transitions from hovering to normal unstalled forward flight.

The tests indicated that the airplane can be flown through the transition range fairly easily although some difficulty will probably be encountered in controlling the yawing motions at angles of attack between about 60° and 40°. An increase in the size of the vertical tail will not materially improve the controllability of the yawing motions in this range of angle of attack but the use of a yaw damper will make the yawing motions easy to control throughout the entire transitional flight range. The tests also indicated that the airplane can probably be flown sideways satisfactorily at speeds up to approximately 33 knots (full scale) with the normal control system and up to approximately 37 knots (full scale) with both elevons and rudders rigged to move differentially for roll control. At sideways speeds above these values, the airplane will have a strong tendency to diverge uncontrollably in roll.

[redacted]

INTRODUCTION

At the request of the Bureau of Aeronautics, Department of the Navy, an investigation is being conducted to determine the dynamic stability and control characteristics of a 0.13-scale flying model of the Convair XFY-1 vertically rising airplane. This airplane has a modified triangular wing and modified triangular vertical tail surfaces mounted symmetrically above and below the fuselage, and has no horizontal tail. It has a large dual-rotating propeller and sufficient power to take off and land vertically. Control is provided by flap-type elevons and rudders operating in the propeller slipstream.

The first phase of the investigation, which was reported in reference 1, dealt with hovering flight at altitude and near the ground, various landing techniques using tethering lines to pull the model down to the ground, unrestrained take-offs and landings, and low-speed forward flight in gusty wind. The present investigation consisted mainly of flight tests through the transition from hovering to normal unstalled forward flight. These flights were constant-altitude transitions covering a speed range from 0 to 115 knots (full scale). Tests were also made in sideways translational flight at speeds from 0 to 37 knots (full scale) for two control arrangements: the basic arrangement in which only the elevons were used for roll control, and an arrangement in which both the rudders and elevons were operated differentially for roll control. The tests included a study of the effects of both yaw and roll dampers and of the effects of some enlarged vertical tails.

The results of the investigation were obtained mainly from the pilots' observations of the stability and controllability and general flight behavior of the model. In addition, some time histories of the motions of the model were prepared from motion-picture records of the flights to aid in the study of some particular phase of the behavior of the model.

NOMENCLATURE AND SYMBOLS

In order to avoid confusion in terminology which might arise because of the large range of operating attitudes of the model, it should be explained that the controls and motions of the model are referred to in conventional terms relative to the body system of axes; that is, the rudders on the vertical tails produce yaw about the normal (Z) axis, differential deflection of the elevons on the wings produces roll about the longitudinal (X) axis, simultaneous up or down deflection of the elevons produces pitch about the spanwise (Y) axis. Figure 1 shows the

axes and the positive directions of the forces, moments, and linear and angular displacements.

The definitions of the symbols used in the present paper are as follows:

θ	angle of pitch of thrust axis relative to horizontal, deg
ψ	angle of yaw, deg
$\dot{\psi}$	yawing velocity, deg/sec
ϕ	angle of bank, deg
$\dot{\phi}$	rolling velocity, deg/sec
δ_r	rudder deflection, deg
δ_a	total differential deflection of the elevons, deg
δ_e	simultaneous up or down deflection of the elevons, deg
α	angle of attack, deg
β	angle of sideslip, deg
V	airspeed, ft/sec
M	pitching moment, ft-lb
L	rolling moment, ft-lb
N	yawing moment, ft-lb
M_α	$\partial M/\partial\alpha$, ft-lb/deg

APPARATUS AND MODEL

The investigation was conducted by personnel of the Langley free-flight-tunnel section in the 30- by 60-foot test section of the Langley full-scale tunnel using the test setup illustrated in figure 2. The arrangement of the power and control cable and the safety cable was similar to that described in reference 1 for the hovering tests except for the attachment of the cables to the model. For the transition tests a curved steel rod was attached to the nose of the model and to the fuselage

at a point near the center of gravity as shown in figure 3. The two cables were combined into a single cable a few feet from the model and this single cable was attached to a pulley which could run on the steel rod from the nose to a point near the center of gravity as the model went from hovering to forward flight. With this setup the drag of the flight cable did not cause very large pitching moments when the model was in forward flight.

A photograph of the model is shown as figure 4 and a sketch showing some of the more important dimensions is shown in figure 5. The model had a modified-triangular wing and modified-triangular vertical-tail surfaces mounted symmetrically above and below the fuselage and an eight-blade, dual-rotating, fixed-pitch propeller (two four-blade elements in tandem) powered by a 5-horsepower variable-frequency electric motor. Geometric characteristics are presented in detail in table I. The model does not represent the final configuration of the airplane because it was constructed before the final design revisions were made. Moreover, the model was not exactly a 0.13-scale model of the original design in all respects because it was designed from some rather small drawings and some slight inaccuracies occurred in obtaining the dimensions. It is believed, however, that the differences between the model and the final airplane configuration are not great enough to alter appreciably the results presented in this paper. Figure 5(b) shows the enlarged vertical tails and rudders employed in one series of flight tests.

The center of gravity was at the design location, 0.15 mean aerodynamic chord and 5.0 inches (full scale) above the thrust line. The weight and moments of inertia of the model scaled up to full scale were within 10 percent of the calculated values for the airplane as shown in the following table:

	Model	Model (scaled up)	Airplane
Weight, lb	35.00	15,920	16,250
I_X, slug-ft^2	0.41	10,900	12,016
I_Y, slug-ft^2	0.93	25,100	23,361
I_Z, slug-ft^2	1.08	29,000	30,647

TEST TECHNIQUE

Maneuvering was accomplished by means of flap-type elevons and rudders operating in the propeller slipstream. For most of the flights the following control travels were used:

Total differential deflection of elevons, deg	54 right, 54 left
Simultaneous deflection of elevons, deg	30 up, 20 down
Rudder deflection, deg	25 right, 25 left

For the one series of tests in which other deflections were used, the travels are given along with the discussion of the test results. The control surfaces were deflected by flicker-type (full-on, full-off) pneumatic servomechanisms which were remotely operated by the pilots. Separate pilots were used to control the model in pitch, roll, and yaw in order that they might give careful attention to studying the motions of the model about each of the axes. For convenience in most of the flights the rolling motions of the model were slowed by a rate-gyro damping device so that the model could be flown more smoothly in roll. This damping device consisted of a rate gyroscope which provides the signal to a proportional type of control actuator. A manual override was used with the damping device so that the model could be controlled and reoriented with respect to the pilot's position. The manual override was a flicker-type control and produced full control deflection at the command of the pilot. In some of the flights the roll damper was not used and the rolling motions were controlled entirely by the pilot. A rate-gyro yaw damper with a manual override was also used in some of the tests.

The investigation covered in the present paper consisted entirely of flight tests of the model. The stability, controllability, and general flight behavior of the model were determined qualitatively from the pilots' observations. General flight behavior is a term used to describe the over-all flight characteristics of a model and indicates the ease with which it can be flown. In effect, the general flight behavior is much the same as the pilots' opinion of the flying qualities of an airplane and indicates whether stability and controllability are adequate and properly proportioned. A quantitative indication of the controllability was also obtained from time histories of the motions of the model recorded by motion-picture cameras.

Transitional Flight

The transition tests were started with the model in hovering flight and, as the airspeed was increased, the controls were operated so that the model performed the transition from hovering to unstalled forward flight. These flights corresponded to very slow, constant-altitude

transitions. Flights were also made in which the airspeed was held constant at intermediate speeds so that the stability and control characteristics at constant speeds could be studied. It was not feasible to make many flights at constant airspeeds less than 65 knots (full scale), however, since that was the minimum speed provided by the tunnel speed control. Lower speeds were obtained by intermittently turning the tunnel drive motors on and off, but this practice had to be stopped because of limitations of the tunnel control equipment.

Transitional flights were made with the basic configuration without the addition of any automatic damping devices in order to determine the basic stability and control characteristics of the model. The tests covered a range of pitch angle from about 87° to 20° which corresponds to airspeeds of from 0 to 115 knots (full scale). Transitional flights were also made using larger vertical tails than the ones in the original configuration in an attempt to improve the stability and controllability of the yawing motions of the model.

For both the basic and the enlarged vertical-tail arrangements, tests were made with the yaw damper to determine whether this device would materially improve the stability of the yawing motions of the model.

Sideways Flight

Flights were made to determine whether the model could be flown at fairly high translational speeds sideways. The airplane might have to approach for a landing in this manner because of the limited visibility along the Z-axis. These flights were made with the roll damper operating for two control arrangements: the basic arrangement in which only the elevons were used for roll control, and an arrangement in which both the rudders and elevons were operated differentially for roll control. The technique used for these tests was the same as that used for the transitional flights. The tests were started with the model in hovering flight and as the airspeed was increased the controls were operated so that the model flew sideways.

RESULTS AND DISCUSSION

The results of the present investigation are illustrated more graphically by motion pictures of the flights of the model than is possible in a written presentation. For this reason a motion-picture film supplement to this paper has been prepared and is available on loan from the NACA Headquarters, Washington, D. C.

Transitional Flight With Basic Configuration

The model could be flown reasonably smoothly through the complete transition between hovering and normal forward flight although there was a range of angle of pitch from about 60° to 40° in which the yawing motions were somewhat difficult to control. This range of angle of pitch corresponds to speeds of from about 30 to 60 knots (full scale).

Yaw characteristics.- The curves of figure 6, which are time histories of the yawing and pitching motions during transitional flights, indicate, in general, the difficulty experienced in controlling the yawing motions. These data do not show clearly the lower limit of the angle-of-pitch range where difficulty was encountered. It was the opinion of the yaw pilot, however, that the lower limit was fairly clearly defined because of the greatly reduced effort required to fly the model at angles of pitch below 40°. The pilot also had some difficulty in controlling the yawing motions at low angles of pitch because of the excessive amount of rudder control available (±25°). The large rudder deflections were necessary so that flights could be made through the 60° to 40° angle-of-pitch range where the yawing instability was encountered. These large rudder deflections made it difficult to fly the model smoothly, particularly at low angles of pitch because of the tendency to over-control. For this reason the flight records indicate an undue amount of yawing in flight, particularly at the low angles of pitch, which would not be expected to occur for the full-scale airplane.

An indication of the static directional stability characteristics of the model in the transition range is given in figure 7 which shows the variation of yawing moment with angle of sideslip taken from the Convair force-test data of reference 2. Both the yawing moment and angle of sideslip are given relative to the body axes. The yawing moment is presented in foot-pounds rather than in coefficient form because coefficients such as those used in reference 2 give an exaggerated impression of the moments at high angles of attack relative to those at low angles of attack. Coefficients such as these are based on free-stream dynamic pressure while for trimmed flight at high angles of attack the propeller slipstream is actually producing most of the yawing moment. The data of figure 7 indicate that the model was directionally unstable (negative slope of N against β) at angles of attack from about 52° to 62° and probably to higher angles.

Whether this static directional instability is directly related to the yawing troubles in this angle-of-attack range is not definitely known since very little testing was done at angles of attack above about 40° (speeds less than 65 knots, full scale) because of the lack of tunnel speed control in this range. The yaw pilot thought that the motion of the airplane which was bothering him at angles of attack from 40° to 60° was a very unstable oscillation. He reported that it was so unstable

that, in the space available for flying, only about one-half of a cycle could be observed before he had to stop the motion to keep the model from flying out of the open-throat test section. Even when he allowed the model to oscillate without any rudder control, only about three-fourths of a cycle could be observed before the model had to be retrieved with the safety cable. If the model was directionally divergent at angles of attack much above 60°, as the data of figure 7 would indicate, the motions were sufficiently mild so that they did not bother the pilot.

Roll characteristics.- At low forward speeds, even at speeds of the order of 4 or 5 knots (full scale), the model was easier to control in roll than it was in hovering flight because it had a definite tendency to fly with its belly into the wind. This stability in bank about the body axis, which was also observed during the investigation reported in reference 1, results from the fact that the model has static stability in bank over a large range of angle of roll as illustrated in figure 8. These plots of rolling moment versus angle of roll for three angles of pitch were obtained from unpublished Convair force test data. Although these data were obtained for conditions somewhat different from trim conditions (as indicated in the key to the figure) they probably give a true qualitative indication of the static stability in bank. The data for conditions near 0° angle of roll show that there is an increasing rolling moment to the right as the left wing drops. This rolling moment actually results from the component of sideslip introduced by the angle of roll. Since a roll to the left causes a sideslip to the left which results in a rolling moment to the right, the model has positive effective dihedral with respect to the body axes at these high angles of pitch.

In flights at the high forward speeds (70 to 120 knots, full scale), the model appeared to have little or no stability in bank about the body axis and behaved like a normal airplane. Both NACA and Convair force-test data (refs. 3 and 4) indicate that the model should have had a high degree of negative dihedral effect. In the flight tests, however, there was no evidence of such a negative dihedral effect which might be expected to cause a strong spiral divergence which should be very obvious to the pilot. The reason for this apparent discrepancy between the force and flight tests has not been completely determined.

The large differential deflections of the elevons used for roll control (±27°) caused the model to be difficult to fly smoothly at the highest speeds because of the tendency to over-control with the flicker-type control. The increase in the magnitude of the rolling motions at low angles of attack is evident in the film supplement to this paper. The model could probably have been flown smoothly in roll at low angles of attack if smaller control deflections had been used in this range.

Pitch characteristics.- The model was easy to fly in pitch and seemed to have stability of angle of attack over most of the speed range. In

fact, the model would fly "hands-off" in pitch for reasonably long periods of time when it was trimmed correctly and the airspeed was not being changed. The stability of angle of attack is also brought out by the force-test data presented in figure 9 (taken from ref. 4) which show that M_α is stable (negative) over most of the speed range. The static instability at speeds less than 37 knots (full scale) shown in figure 9 was not noticeable in the flight tests, perhaps because the forces involved were small, or perhaps because, as pointed out previously, little flying was done at these very low speeds. The data of figure 9 also indicate that the model had an unstable variation of elevator trim angle with speed at speeds between 10 and 80 knots (full scale). This stick-position instability, however, did not cause any difficulty in flying the model.

The rapid variations in angle of pitch about the mean value, which are evident in figure 6, did not seem to be caused by poor stability but seemed to result partly from the difficulty in coordinating thrust and pitch control as the airspeed increased and partly from over-controlling because the elevator travel ($\pm 25^\circ$) was excessive for much of the flight range.

In the tests there was a relatively large time lag in the thrust control which caused the model to rise and fall almost continually during a flight. This lag was caused by the slow response of the 250-horsepower variable-frequency motor-generator set in changing its speed when the power operator required a change in speed of the model motor. This large lag caused appreciable over-controlling as the operator attempted to adjust the power to maintain level flight as the tunnel airspeed increased or decreased during a transition flight.

A plot of the variation of trim angle of pitch with airspeed (scaled up to correspond to that of the full-scale airplane) for steady flight during transition is presented in figure 10. These angles of pitch are averages taken from the motion-picture records of several flights at different forward speeds when the model appeared to be in a steady flight condition. The dashed curve of figure 10 was scaled up from data furnished by Convair to represent the same airplane weight as that represented by the flying model in this investigation. This figure indicates that the variation of angle of pitch with airspeed is similar for the two models, except that it was necessary to fly at a slightly lower angle of pitch with the flying model to attain the same speed because of the added drag of the propeller guard and the power and control cable. It is believed, however, that these differences in operating conditions as well as the previously mentioned small differences in configuration will not materially affect the main results of the present investigation.

Transition Flights With Modified Configurations

Effect of enlarged tail.- In an attempt to improve the yawing behavior of the model in the range of angle of pitch between 60° and 40° the model was tested with the enlarged vertical tail. Little change in the stability and controllability was noticed and the model was still difficult to control in yaw in this angle-of-pitch range. This fact is illustrated in figure 11. Comparison of figure 11(a), which is a replot of part of the record shown in figure 6, and figure 11(b) shows the similarity in the yawing motions of the model with the two vertical tails in the range of angle of pitch where the yawing motions were difficult to control. These curves indicate that the yawing motions were just as bad or perhaps even slightly worse with the enlarged tail than with the original tail. The yaw pilot, however, thought that the model was slightly easier to fly with the large tail; mainly because of the greater control moments available. Evidently the pilot felt somewhat more confident of his ability to control the model with the large tail and, consequently, allowed it to yaw farther before stopping it with his control.

Effect of yaw damper.- Since the yawing motions were difficult to control both with the basic and the enlarged-vertical-tail configurations, the yaw damper was tried as another means of improving the behavior of the model in yaw. As indicated by figure 11(c) appreciable improvement in the yawing behavior of the model resulted from the use of the yaw damper. It is not known whether the yaw damper made the yawing motions stable or merely slowed the motions so that the pilot could control them more easily. The yaw-damper control system did not have provision for trimming the model in flight so the motions that appeared to be mild divergences in yaw could have been the result of out-of-trim rudder deflections. Even though the model may still have been unstable in yaw with the yaw damper operating, the motions were very easy to control at all speeds and the flights were much smoother than for the basic condition. The gearing of the yaw damper during all of these flights was such that the deflection of the rudder in response to the rate of yaw $\delta_r/\dot{\psi}$ was approximately 2.6° per degree per second.

Effect of roll damper.- Although for most of the flights the rolling motions of the model were controlled by the roll damper, a few flights were made without the roll damper in order to determine its effect on the stability and control characteristics of the model. It was found that the roll damper had a slightly favorable effect in the period of hovering flight before the transition actually started. As soon as the transition was started the model became easier to control in roll because of its stability in bank about the body axis, and the stabilizing effect of the roll damper was not noticeable. At low angles of pitch where the manual control was excessive because of the large aileron travel, the roll damper made the flights much smoother. This result does not indicate the need for a roll damper at low angles of attack since the pilot

of the airplane will be able to use smaller aileron deflections in this condition and will probably be able to fly the airplane smoothly in roll. The gearing of the roll damper for all of the tests was such that the total differential deflection of the elevons in response to the rate of roll $\delta_a/\dot{\phi}$ was approximately 4.8° per degree per second.

Sideways Flight

Basic configuration.- The basic model with the roll damper operating could be flown sideways at speeds up to about 33 knots (full scale). The model was easy to control in roll in hovering flight but as the airspeed was increased the model had an increasingly strong tendency to diverge in roll. It therefore became increasingly more difficult to keep the model oriented with one wing pointing into the wind. Finally at a speed of about 33 knots (full scale) the model would roll off and fly on its belly or back despite efforts of the roll pilot to control it. This roll-off is illustrated in figure 12 which presents time histories of the angle of bank as the airspeed was increased up to about 33 knots (full scale). When it was found in the flight tests that the model diverged in roll, force tests were made by Convair which showed that the tendency to diverge was caused by static instability in bank. The curves of figure 8 are typical of the curves obtained from these force tests and indicate that for sideways flight ($\phi = -90^{\circ}$) there is an unstable variation of rolling-moment coefficient with angle of bank which increases with increasing speed. The roll divergence encountered in flying the model occurred when the pilot inadvertently allowed the model to roll to such a large angle that the rolling moment produced because of the instability was greater than the moment that could be produced by the roll control. The model therefore rolled off against full aileron control.

The speed of 33 knots (full scale) should not be regarded necessarily as a critical speed since the speed at which the divergence occurred would appear to depend upon the pilot's skill in preventing the model from rolling to a large angle from which a recovery could not be made. The pilot of the airplane, being in the airplane, will be able to sense rolling accelerations and apply corrective controls sooner than the pilot of the model was capable of doing. The airplane will also roll considerably slower than the model because of the small scale of the model. From these considerations it would seem that the pilot of the full-scale airplane should be able to fly at higher speeds than those obtained in these tests.

No attempt was made to fly the model sideways without the roll damper operating because it was rather difficult to control the model at low speeds in sideways flight even with the roll damper operating.

Figure 13 shows the variation of angle of yaw with sideways speed for steady trimmed flight for the free-flight model as compared with that obtained from data furnished by Convair. These data show that at a given speed the flying model flew at an appreciably lower angle of yaw than that indicated by the force-test results. This result indicates that the drag of the propeller guard and the power and control cable was relatively large with respect to the drag of the model. This difference in operating conditions tends to make the results optimistic with respect to the maximum sideways speeds that can be obtained because the sideslip angle was reduced, thereby reducing the rolling moment. The fact that this difference would appear to make the results optimistic tends to offset the fact that the model tests tended to be pessimistic because they were made with a small-scale model flown with remote controls.

Effect of modified roll-control system.- Tests were made with the modified roll-control system at the suggestion of Convair as an attempt to increase rolling effectiveness and thereby increase the maximum sideways speed. In these flights the roll control was almost doubled by providing differential deflections of the rudders as well as the elevons. The use of this system, with the following control deflections,

For roll control	(elevons), deg	54 right, 54 left
	(rudders), deg	50 right, 50 left
For yaw control (elevons), deg		19 up, 19 down
For pitch control (rudders), deg		25 right, 25 left

resulted in a slightly higher sideways flight speed before the roll-off occurred. The speed at which the roll-off occurred in this case was about 37 knots (full scale).

CONCLUSIONS

The following conclusions were drawn from the results of flight tests of a 0.13-scale flying model of the Convair XFY-1 vertically rising airplane during constant-altitude, slow transitions from hovering to normal unstalled forward flight:

1. Flights through the transition range can be performed fairly easily.

2. The pitching and rolling motions will be easy to control and there will probably be stability of angle of attack and angle of roll over most of the transition range.

3. Some difficulty will probably be encountered in controlling the yawing motions at angles of pitch between about 60° and 40°. An increase in the size of the vertical tail will not materially improve the controllability of the yawing motions. The use of a yaw damper will considerably improve the yawing motions and make it easy to control throughout the entire transition range.

4. It will be possible to fly sideways at speeds up to about 33 knots with the normal control system or up to about 37 knots with both elevons and rudders rigged to move differentially for roll control. Above these speeds there will be a tendency toward roll divergence.

Langley Aeronautical Laboratory,
National Advisory Committee for Aeronautics,
Langley Field, Va.

Powell M. Lovell, Jr.
Powell M. Lovell, Jr.
Aeronautical Research Scientist

Robert H. Kirby
Robert H. Kirby
Aeronautical Research Scientist

Charles C. Smith, Jr.
Charles C. Smith, Jr.
Aeronautical Research Scientist

Approved: Thomas A. Harris
Thomas A. Harris
Chief of Stability Research Division

lrf

REFERENCES

1. Lovell, Powell M., Jr., Smith, Charles C., Jr., and Kirby, Robert H.: Stability and Control Flight Tests of a 0.13-Scale Model of the Consolidated-Vultee XFY-1 Airplane in Take-Offs, Landings, and Hovering Flight - TED No. NACA DE 368. NACA RM SL52I26, Bur. Aero., 1952.

2. Pieper, C. W.: Low-Speed Wind Tunnel Tests of a .15 Scale Powered Model of the XFY-1 Airplane With a 57° Wing Leading Edge Sweepback. Rep. No. CVAL 107, Consolidated Vultee Aircraft Corp., Nov. 1, 1952.

3. Queijo, M. J., Wolhart, W., and Fletcher, H. S.: Wind-Tunnel Investigation at Low Speed of the Static Longitudinal and Lateral Stability Characteristics of a 1/9-Scale Powered Model of the Convair XFY-1 Vertically Rising Airplane - TED No. NACA DE 373. NACA RM SL53B20, Bur. Aero., 1953.

4. Pieper, C. W.: Low-Speed Wind Tunnel Tests of a .15 Scale Powered Model of the XFY-1 Airplane. Rep. No. CVAL 96, Consolidated Vultee Aircraft Corp., Jan. 18, 1952.

TABLE I.- GEOMETRIC CHARACTERISTICS OF THE MODEL

Weight, lb	35.00
Wing (modified triangular plan form):	
Sweepback, deg	55
Airfoil section	NACA 63-009 modified
Aspect ratio	1.90
Taper ratio (root to theoretical tip)	5.23
Area (total to center line), sq in.	818.95
Span (theoretical), in.	39.49
Mean aerodynamic chord, in.	23.94
Span of elevon (each), in.	15.37
Chord of elevon, in.	2.92
Dihedral angle, deg	0
Over-all length of model, in.	49.40
Fuselage length, in.	45.40
Vertical tails (modified triangular plan form):	
Sweepback, deg	40
Airfoil section	NACA 63-009 modified
Aspect ratio	3.18
Taper ratio (root to theoretical tip)	3.15
Area (total to center line), sq in.	379.88
Span, in.	34.73
Mean aerodynamic chord, in.	13.07
Span of top rudder, in.	14.13
Span of bottom rudder, in.	11.13
Chord of rudders, in.	2.85
Propellers (eight-blade dual-rotating):	
Diameter, in.	23.85
Hamilton Standard design, drawing number	3155-6-1.5
Solidity, one blade	0.0475
Gap, in.	3.00

NACA

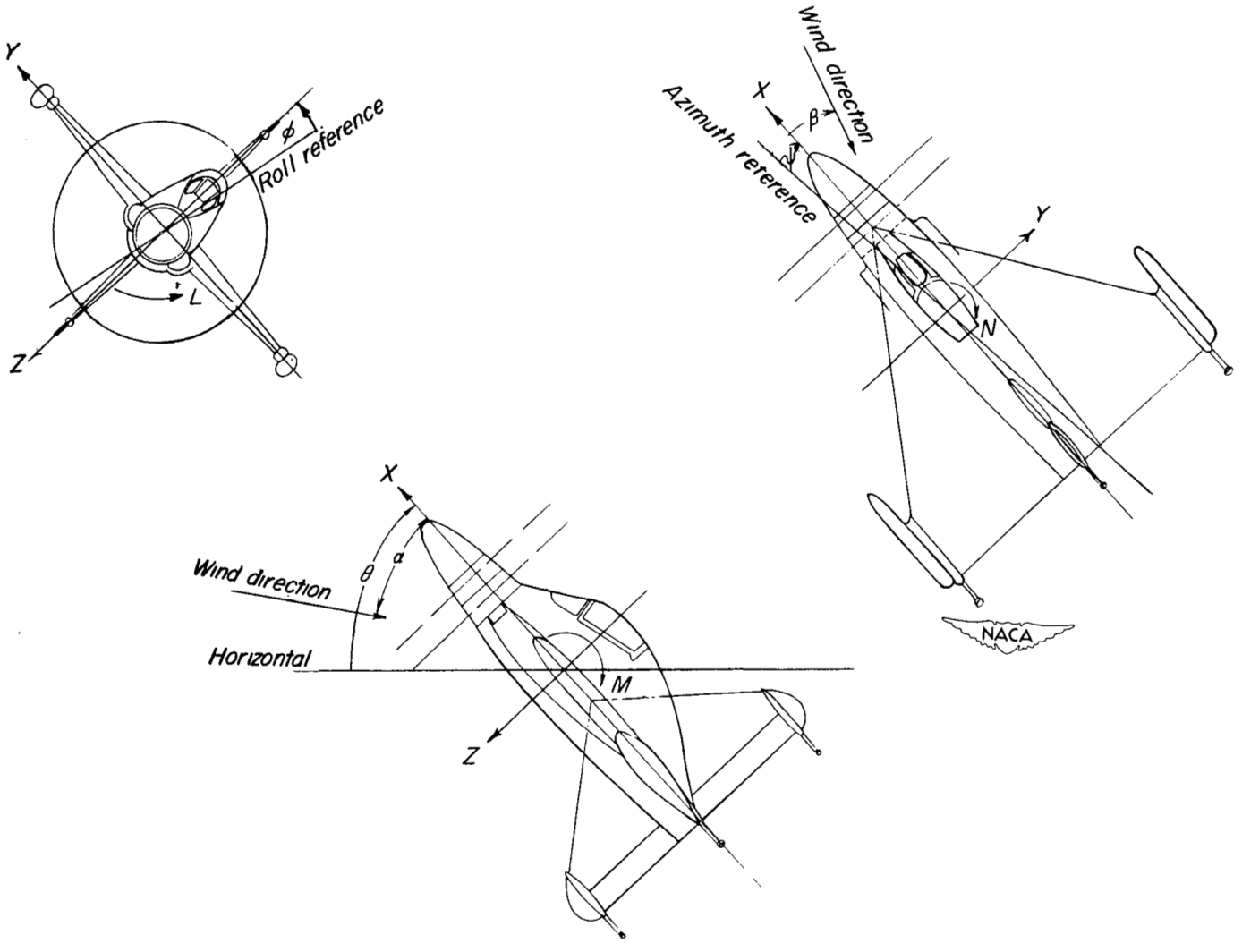

Figure 1.- The body system of axes. Arrows indicate positive directions of forces, moments, and linear and angular displacements.

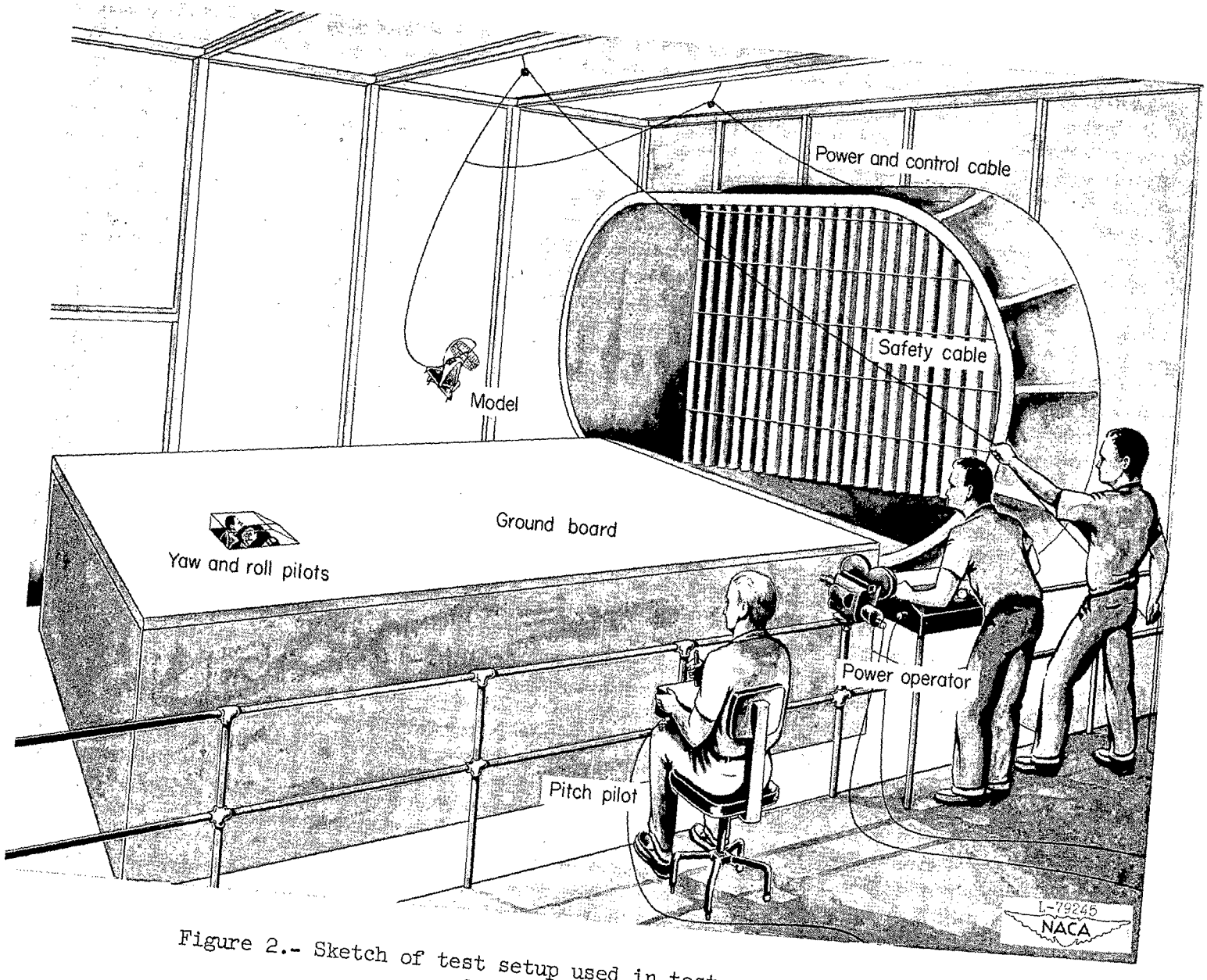

Figure 2.- Sketch of test setup used in test section of Langley full-scale tunnel.

[redacted]

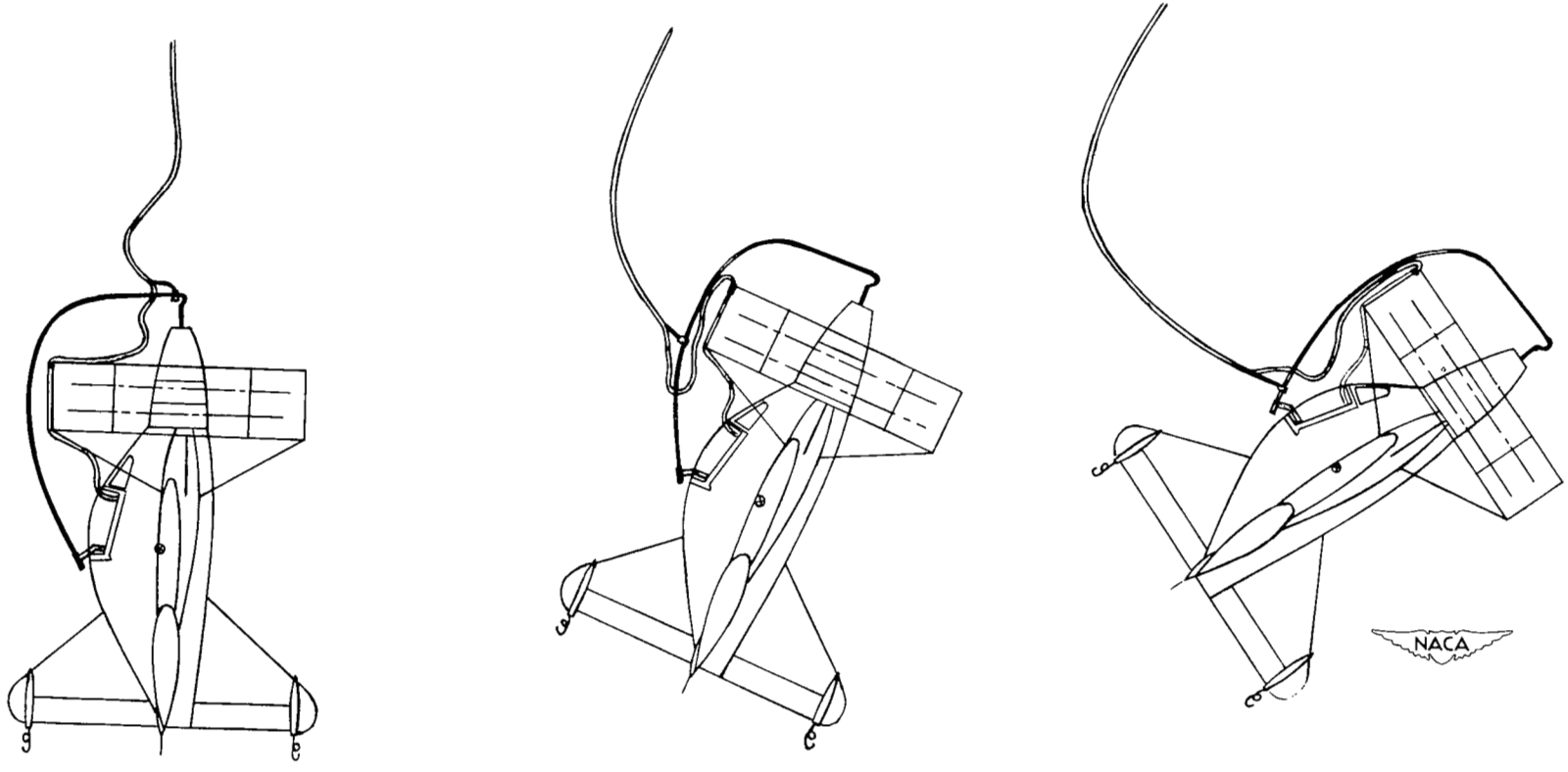

Figure 3.- Method of attaching combined safety and power and control cables to XFY-1 model during transitional flight tests.

[redacted]

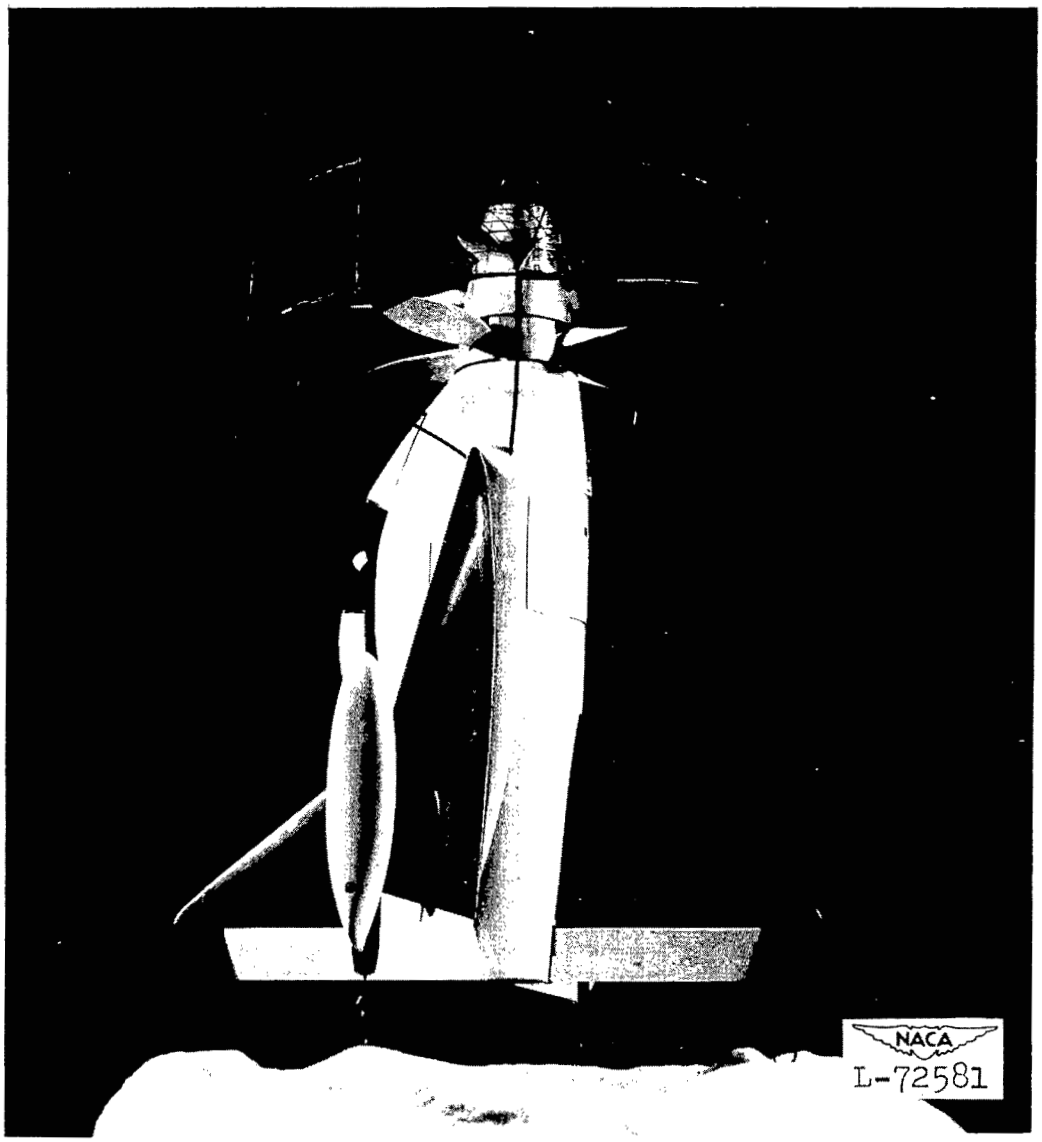

Figure 4.- The Convair XFY-1 model with propeller guard.

[redacted]

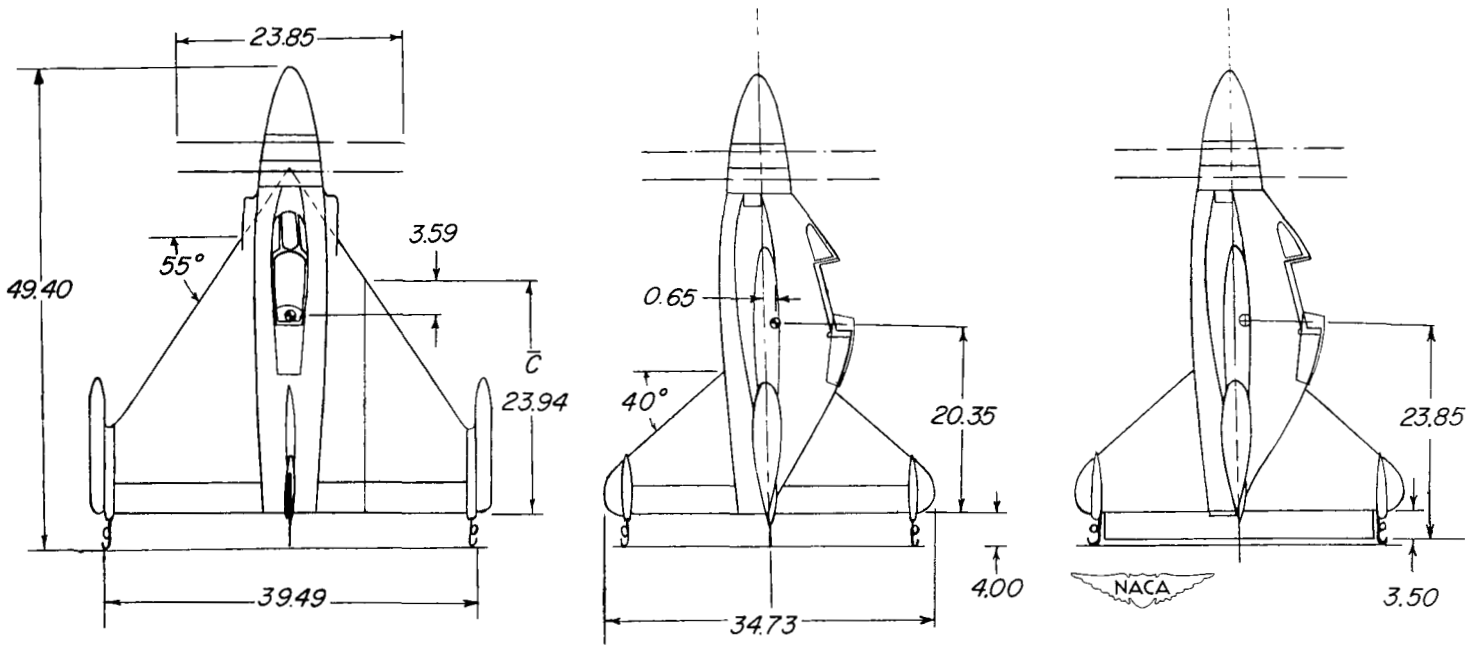

(a) Basic model.

(b) Model with enlarged tails.

Figure 5.- The Convair XFY-1 vertically rising airplane model. All dimensions are in inches.

[redacted]

[redacted]

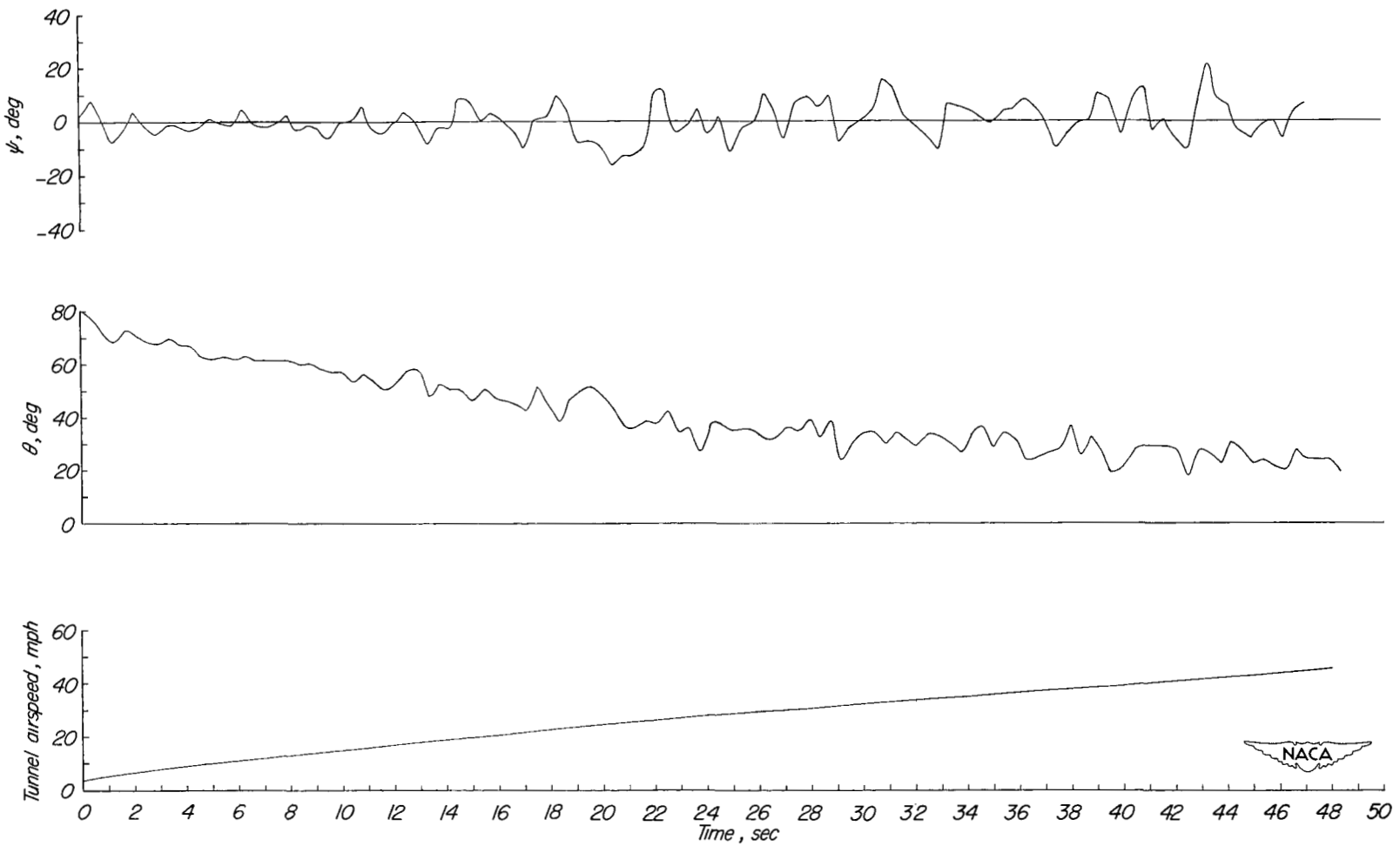

Figure 6.- Variation of angle of yaw and angle of pitch with time during transition for the basic design. Small tail; no roll damper, no yaw damper.

[redacted]

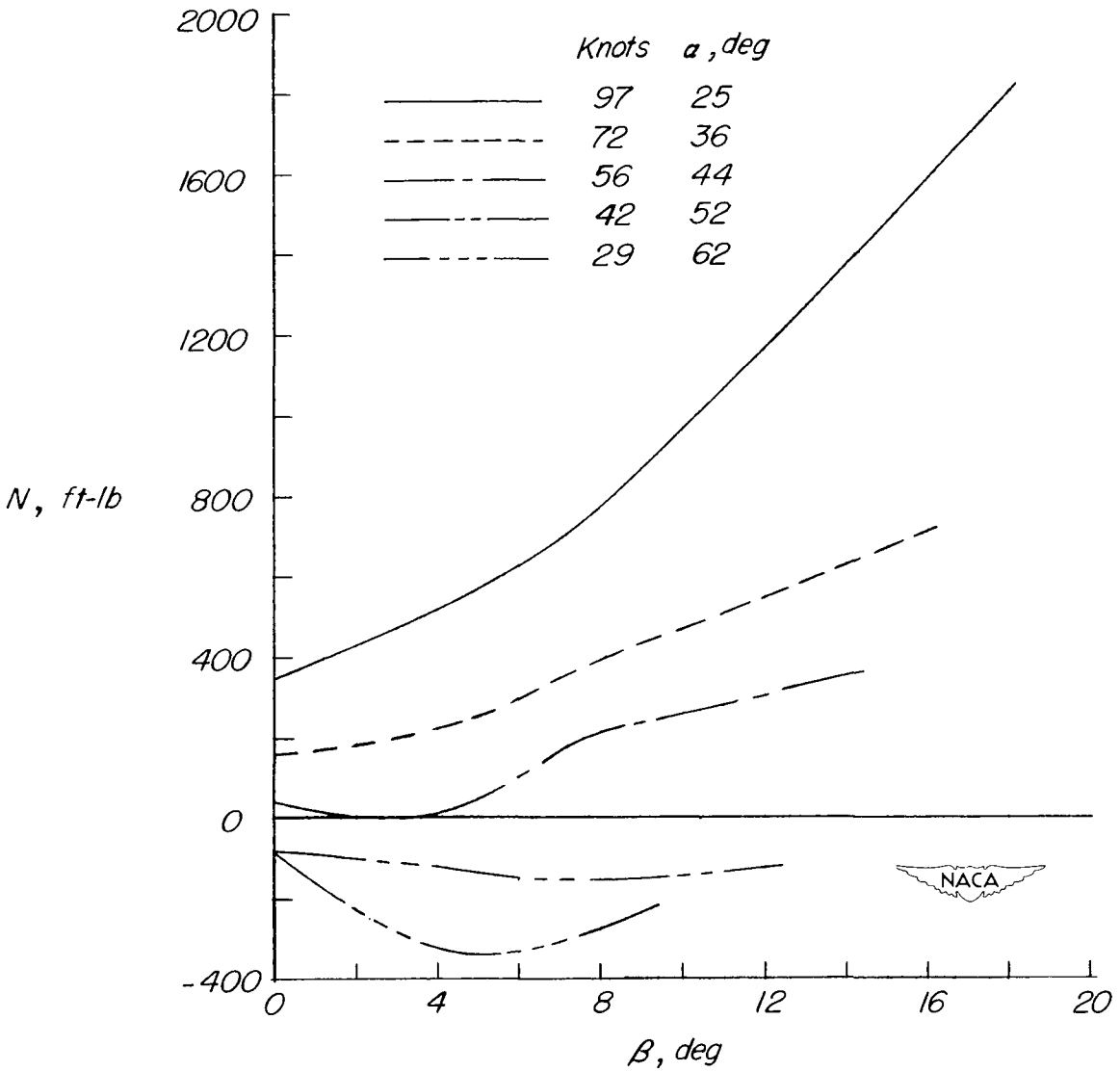

Figure 7.- Variation of yawing moment with the angle of sideslip for various angles of attack in transition range. (From ref. 2)

	Angle of pitch with respect to horizontal, deg	Test airspeed, knots	Trim airspeed, knots (Scaled up from model conditions)	
			Forward	Sideways
○ ————	80	24	8	9
□ - - - - - -	70	34	19	20
◇ —— - ——	60	42	31	31

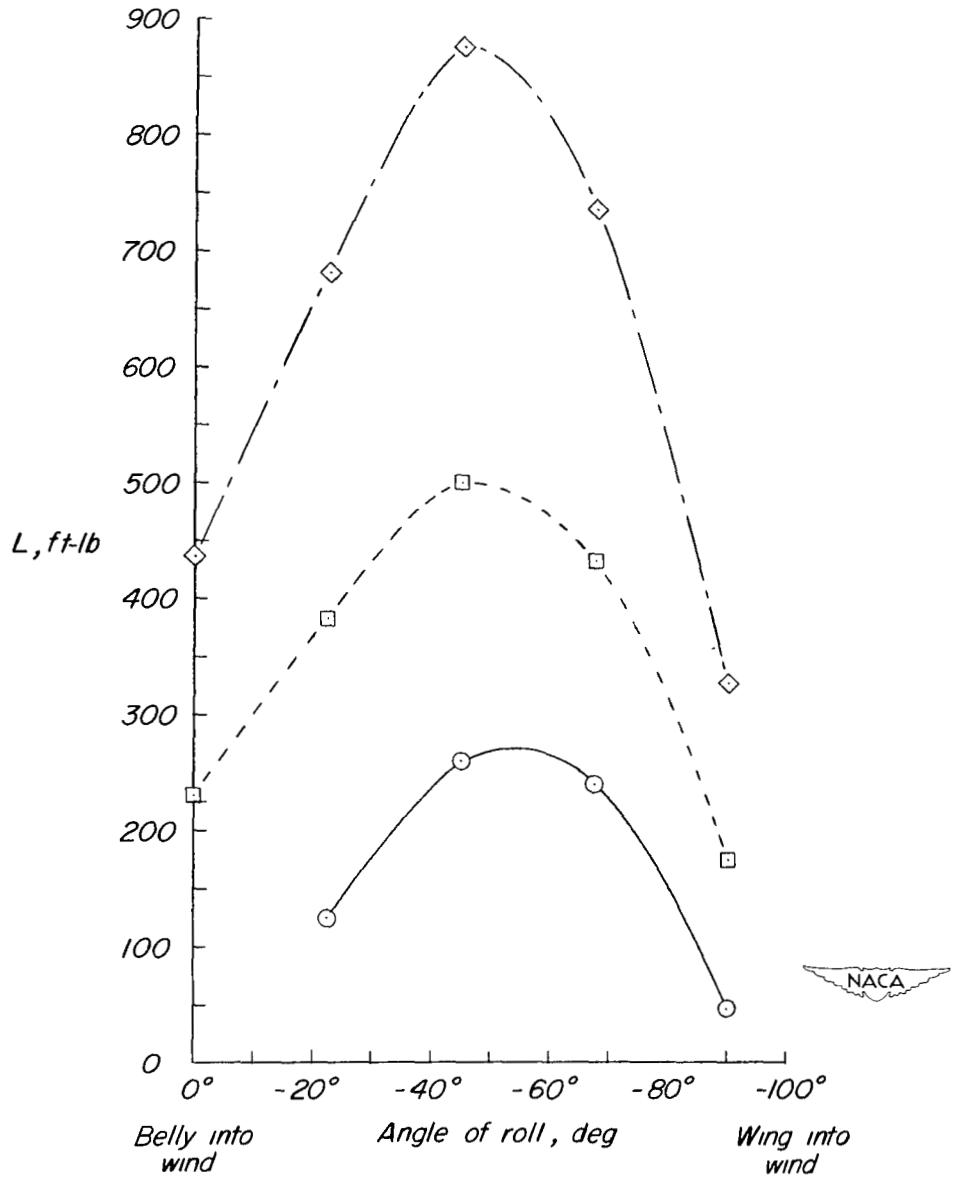

Figure 8.- Variation of rolling moment with angle of roll for various pitch angles and speeds. $\delta_a = 0^{\circ}$. (From unpublished Convair data)

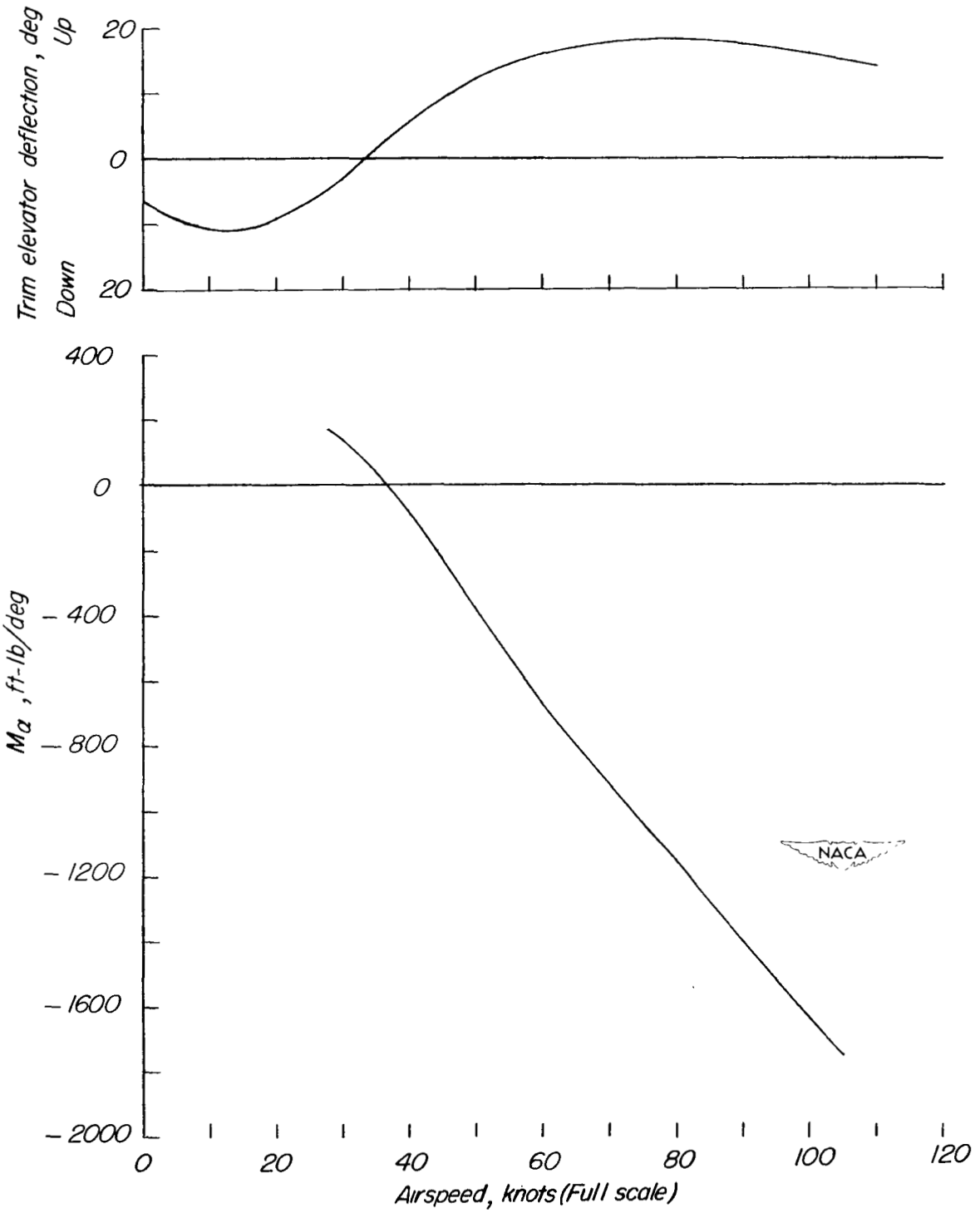

Figure 9.- Variation of trim elevator deflection with speed and variation of the angle-of-attack stability parameter M_α with speed in the transition range. (From ref. 4)

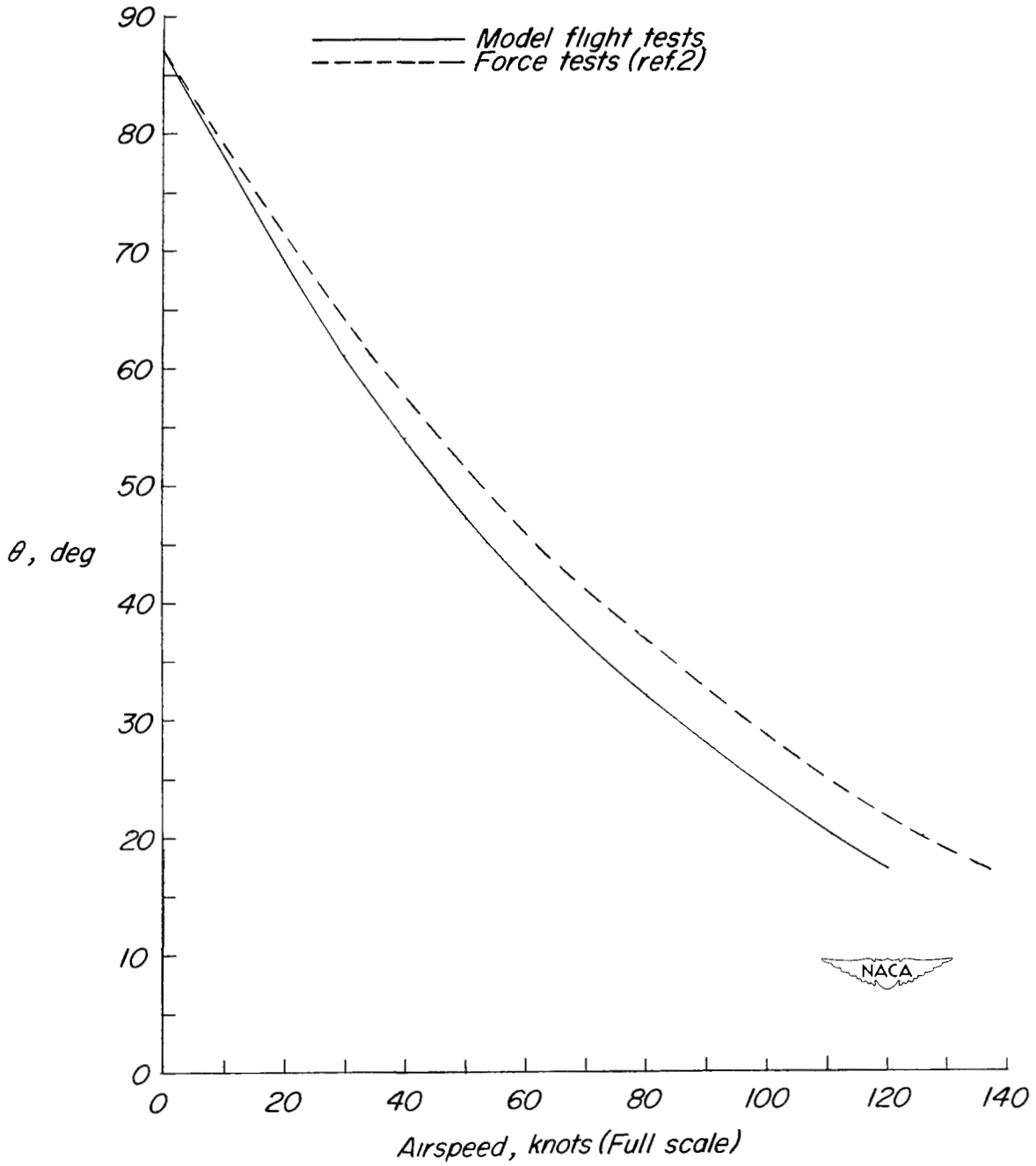

Figure 10.- Variation of angle of pitch with forward transitional speed.

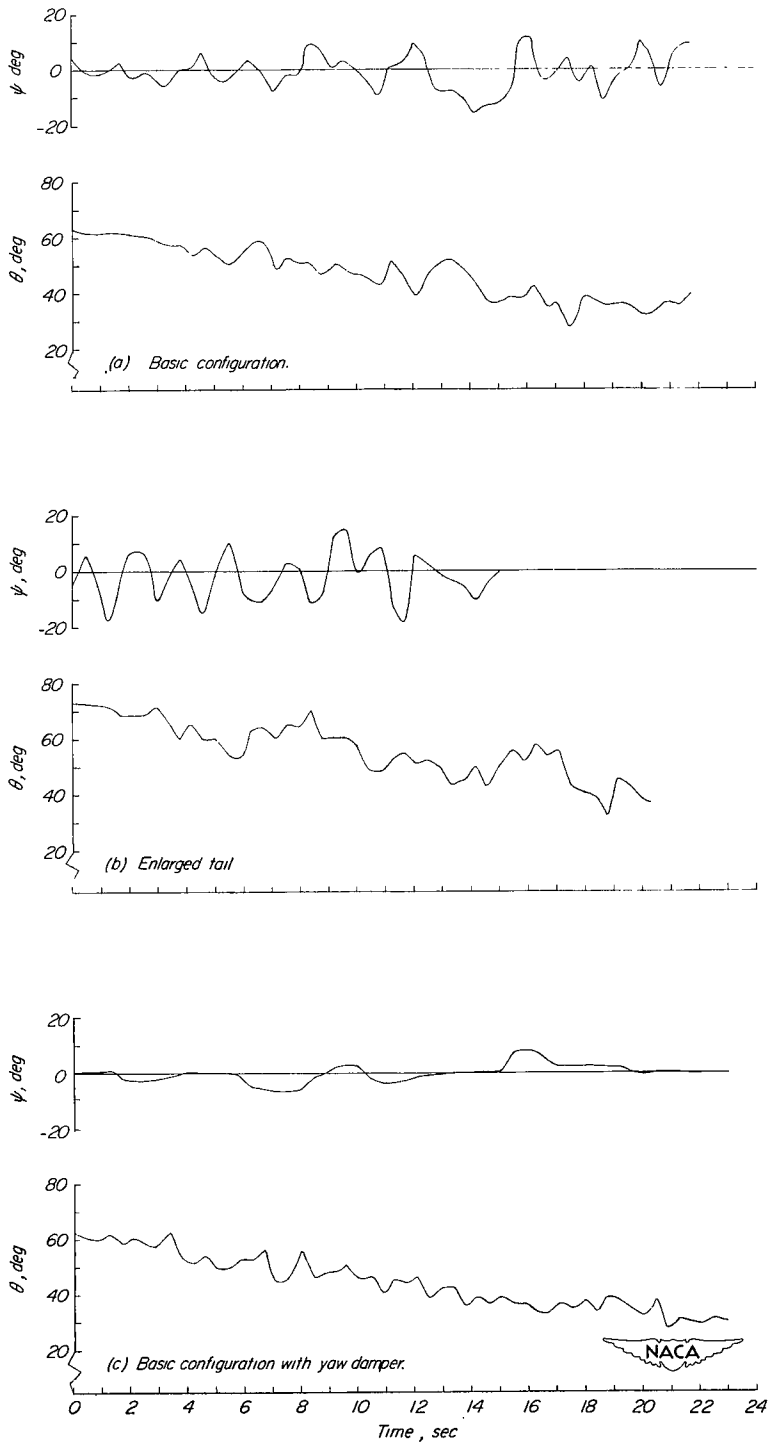

Figure 11.- Effect of the yaw damper and the enlarged tail on the yawing motion of the model in the portion of the transition range where the yawing motions are difficult to control.

[redacted]

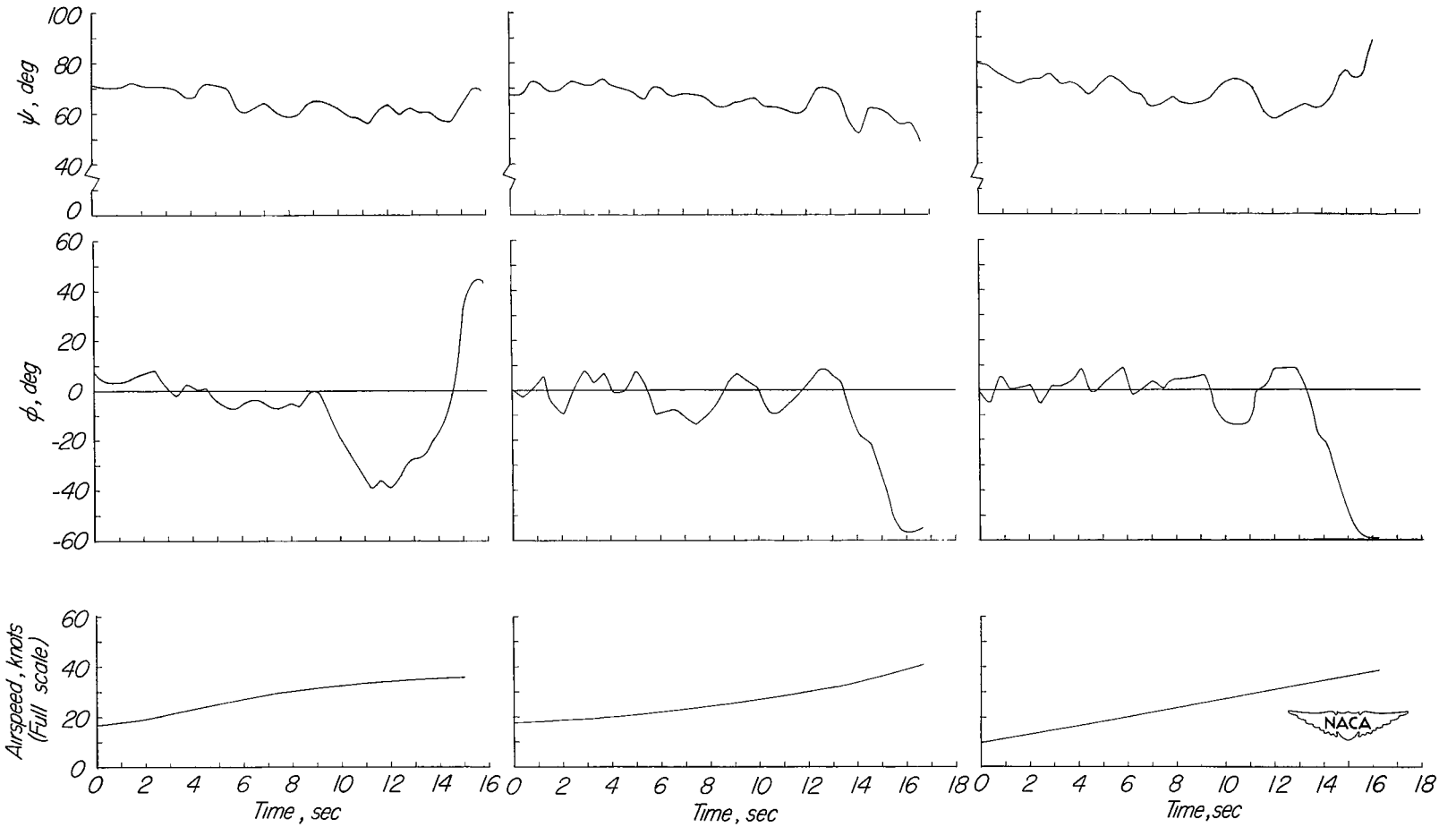

Figure 12.- Time histories of the angle of roll and the accompanying angle of yaw and velocity in sideways flight.

[redacted]

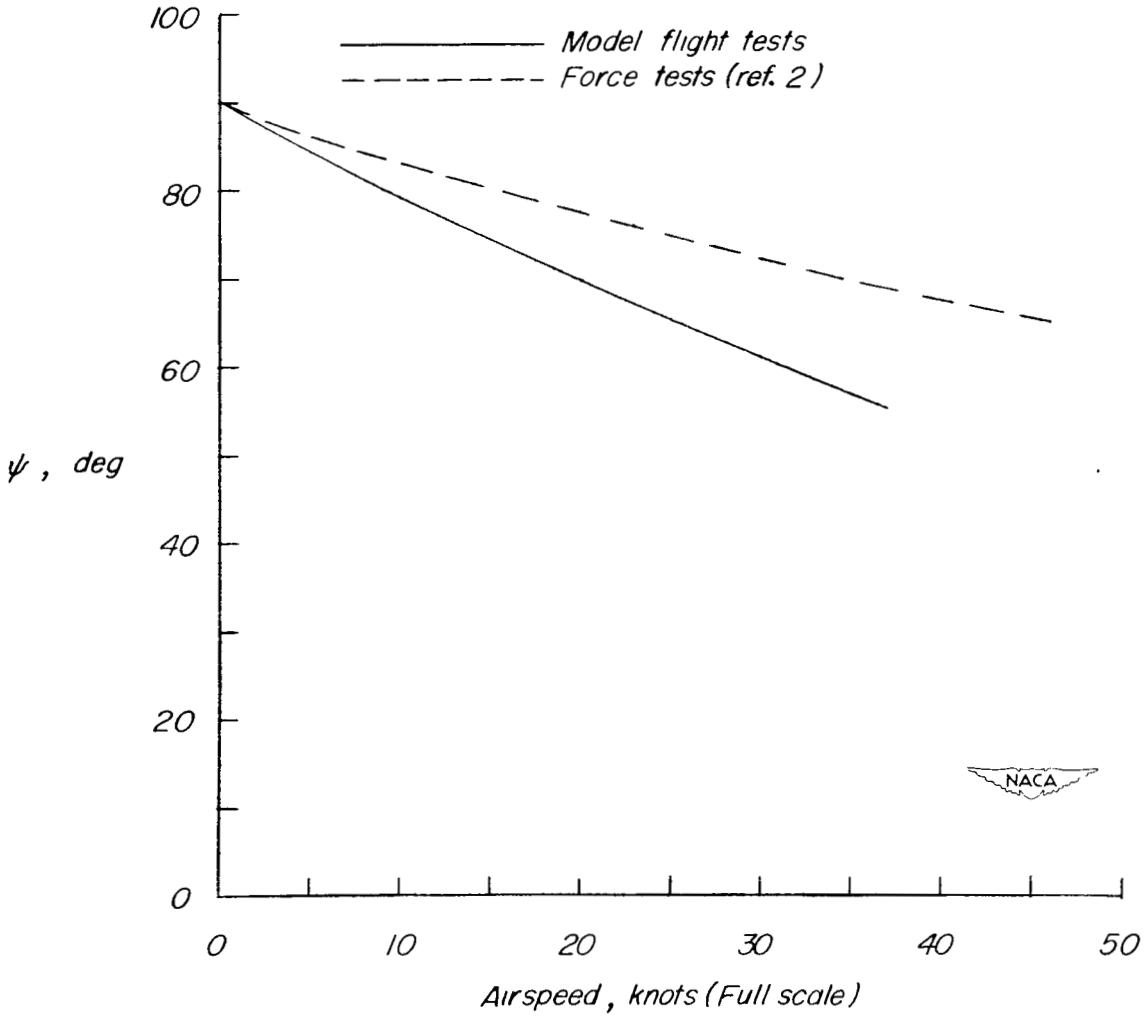

Figure 13.- Variation of angle of yaw with airspeed in sideways translational flight.

SECURITY INFORMATION

NASA Technical Library
3 1176 01438 5992

[redacted]