Library Copy
RA. A23 L184

CONFIDENTIAL

Copy 44
RM SL57D18

RESEARCH MEMORANDUM

for the

Bureau of Aeronautics, Department of the Navy

FREE-SPINNING-TUNNEL INVESTIGATION OF A 1/25-SCALE MODEL OF THE McDONNELL F3H-2N AIRPLANE

TED NO. NACA AD 3100

By Henry A. Lee

Langley Aeronautical Laboratory
Langley Field, Va.

CLASSIFICATION CHANGED

UNCLASSIFIED

LIBRARY COPY

APR 30 1957

LANGLEY AERONAUTICAL LABORATORY
LIBRARY, NACA
LANGLEY FIELD, VIRGINIA

By authority of NASA memo. Dated Mar. 12, 1963
s/ P. M. Lovell for
Boyd C. Myers II
NASA -6-25-63

CLASSIFIED DOCUMENT

This material contains information affecting the National Defense of the United States within the meaning of the espionage laws, Title 18, U.S.C., Secs. 793 and 794, the transmission or revelation of which in any manner to an unauthorized person is prohibited by law.

NATIONAL ADVISORY COMMITTEE
FOR AERONAUTICS

WASHINGTON

APR 29 1957

CONFIDENTIAL

NASA Technical Library
3 1176 01437 9318

NATIONAL ADVISORY COMMITTEE FOR AERONAUTICS

RESEARCH MEMORANDUM

for the

Bureau of Aeronautics, Department of the Navy

FREE-SPINNING-TUNNEL INVESTIGATION OF A 1/25-SCALE MODEL OF THE McDONNELL F3H-2N AIRPLANE

TED NO. NACA AD 3100

By Henry A. Lee

SUMMARY

An investigation was conducted in the Langley 20-foot free-spinning tunnel on a 1/25-scale model of the McDonnell F3H-2N airplane. The effects of control settings and movements upon the erect and inverted spin and recovery characteristics of the model were determined for the clean condition. The effects of the engine gyroscopic moments on the spin and recovery characteristics were determined. Spin-recovery parachute tests were also performed.

The results indicate that erect and inverted spins obtained on the airplane for the combat gross-weight loading should be satisfactorily terminated by rudder reversal to full against the spin, accompanied by simultaneous movement of the ailerons to full with the spin (erect spin - stick full right in a right spin; inverted spins - stick full left in a spin to pilot's right). The erect spins obtained should be oscillatory in roll, yaw, and pitch. During recovery the stick should be held full back until the spin rotation ceases in order to avoid best the possibility of entering an aileron roll. During recoveries from the inverted spin, it is important to hold full-recovery controls until the airplane recovers from the spin because the attitude and rotation of the spin may not change appreciably until after about one turn after the controls have been moved. The gyroscopic moment from engine rotation will have no appreciable effect on the spin and recovery characteristics of the airplane. A 16.7-foot-diameter tail parachute with a towline length of 30 feet and a drag coefficient of 0.73 should be satisfactory for emergency recoveries from erect and inverted demonstration spins.

[redacted]

INTRODUCTION

An investigation has been made in the Langley 20-foot free-spinning tunnel to determine the spin and recovery characteristics of a 1/25-scale model of the McDonnel F3H-2N airplane as requested by the Bureau of Aeronautics, Department of the Navy. The F3H-2N differs from the McDonnell F3H-1N, on which model tests were previously made and the results reported in reference 1, primarily in that the F3H-2N has a heavier fuselage with a larger engine, a longer wing root chord, and a greater wing area.

The erect and inverted spin and recovery characteristics for the F3H-2N were determined for the combat gross-weight loading. Brief tests were made to determine the effect of engine gyroscopic moments on the spin and recovery characteristics. The size of tail parachute required for emergency recovery from spins was also determined.

An appendix is included which presents a general description of the model testing technique, the precision with which model test results and mass characteristics are determined, variations of model mass characteristics occurring during the tests, and a general comparison between model and full-scale airplane results.

SYMBOLS

b	wing span, ft
S	wing area, sq ft
$\bar{c}$	mean aerodynamic chord, ft
$\frac{x}{\bar{c}}$	ratio of distance of center of gravity rearward of leading edge of mean aerodynamic chord to mean aerodynamic chord
$\frac{z}{\bar{c}}$	ratio of distance between center of gravity and fuselage reference line to mean aerodynamic chord (positive when center of gravity is below reference line)
m	mass of airplane, slugs
I_X, I_Y, I_Z	moments of inertia about X, Y, and Z body axes, respectively, slug-ft^2

$\frac{I_X - I_Y}{mb^2}$ inertia yawing-moment parameter

$\frac{I_Y - I_Z}{mb^2}$ inertia rolling-moment parameter

$\frac{I_Z - I_X}{mb^2}$ inertia pitching-moment parameter

ρ air density, slugs/cu ft

μ relative density of airplane, $\frac{m}{\rho Sb}$

α angle between fuselage reference line and vertical (approximately equal to absolute value of angle of attack at plane of symmetry), deg

ϕ angle between span axis and horizontal, deg

V full-scale true rate of descent, ft/sec

Ω full-scale angular velocity about spin axis, rps

MODEL AND TEST CONDITIONS

The 1/25-scale model of the McDonnell F3H-2N airplane used for the tests was the same model used for the McDonnell F3H-1N tests reported in reference 1 except that it was modified to represent the F3H-2N by extending the wing root chord and increasing the wing area. A three-view drawing comparing the F3H-2N and F3H-1N models as tested is shown in figure 1. The dimensional characteristics of the F3H-2N airplane are presented in table I. Longitudinal control was provided by means of an all-movable horizontal tail.

The model was ballasted to obtain dynamic similarity to the airplane at an altitude of 20,000 feet (ρ = 0.001267 slug/cu ft). The mass characteristics and inertia parameters for the combat gross-weight loading on the airplane were supplied by the McDonnell Aircraft Corporation. These values and corresponding values for the loading tested on the model are indicated in table II.

A remote-control mechanism was installed in the model to actuate the controls for the recovery attempts and to open the parachute for the parachute tests. Sufficient torque was exerted on the controls for the recovery attempts to overcome the hinge moments and to reverse the controls fully and rapidly.

For the tests made to determine the effect of engine gyroscopic moments on the spin and recovery characteristics, the angular momentum of the rotating parts of the full-scale Allison J-71-A-2 jet engine was simulated by rotating a flywheel with a small direct-current motor powered by small silver-cell batteries. The flywheel was located in the model in such a way that the axis of the angular momentum was parallel to the longitudinal axis of the airplane.

The maximum control deflections (measured perpendicular to the hinge lines) used on the model during the tests were:

Rudder, deg	25 right, 25 left
Stabilizer incidence, deg . .	7.5 leading edge up, 17 leading edge down
Ailerons, deg	40 up, 20 down

Brief tests were made with the rudder deflection increased to $\pm 30^{\circ}$.

RESULTS AND DISCUSSION

The results of the spin tests of the model in the combat gross-weight loading (table II) are presented in charts 1 and 2 and in table III. In the charts and in table III, the horizontal tail is referred to as an elevator for convenience (elevator up, for instance, indicates that the trailing edge of the horizontal tail is up). The model data are presented in terms of the full-scale values for the airplane at a test altitude of 20,000 feet. Inasmuch as the results for right and left spins were generally similar, the data are presented arbitrarily in terms of right spins.

Erect Spins

The results of the erect-spin tests of the model are shown in chart 1. These tests were brief, because the spin and recovery characteristics were found to be very similar to those of the F3H-1N model (ref. 1) and because of the high rates of descent of the model and the wandering and oscillatory nature of the spins made it very difficult to maintain the model in the tunnel except for very short periods of time. Also, it was difficult to obtain spins on the model. With regard to the motion of the model during spins and during dives following launchings in which the model did not spin, reference may be made to the motion-picture film strips of reference 1 showing motions of the F3H-1N model.

These pictures illustrate adequately the motions obtained with the F3H-2N model.

During the F3H-2N tests, emphasis was placed on determining whether satisfactory recoveries could be obtained by movement of ailerons to full with the spin and the rudder to full against the spin. These were the control manipulations which previously had been found to be necessary for satisfactory recovery characteristics for the F3H-1N model (ref. 1). The model results indicate that use of this same control technique would be adequate as a recovery-control technique for the F3H-2N airplane from any spins obtained. Although this recovery technique was demonstrated only from the normal spinning-control configuration (ailerons neutral, rudder full with the spin, elevators full up), spin-tunnel experience indicates that this technique would also be adequate from spins obtained at the criterion spinning-control setting. (See appendix.) Since the spin motions of the two models are very much alike, it is also recommended for the F3H-2N airplane that, during recovery from a spin, the stick should be held full back until the spin rotation ceases in order to avoid best the possibility of entering an aileron roll. After recovery, the stick should be moved forward to regain normal flight. If an aileron roll should occur after spin recovery, ailerons should be moved to oppose this rotation.

Brief erect spin and recovery tests were made with maximum rudder deflections increased to 30° right and 30° left. The results were similar to those obtained with ±25° rudder settings and are not presented in chart form.

Engine Gyroscopic Moments

The results (not presented in chart form) of the tests made to determine the effects of the engine gyroscopic moments on the spin indicate that these moments will have no appreciable effects on the spin and recovery characteristics of the airplane.

Inverted Spins

The results of the inverted-spin tests of the model are presented in chart 2. The order used for presenting the data for inverted spins is different from that used for erect spins. For inverted spins "controls crossed" (right rudder pedal forward and stick to the pilot's left when the airplane is spinning to the pilot's right) for the developed spin is shown on the right of the chart and "stick back" is shown at the bottom. When controls are crossed in the developed spin, the ailerons aid the rolling motion; when controls are together, the airplanes oppose the rolling motion. The angle of wing tilt on the chart is given as up or down relative to the ground.

The results as shown in chart 2 indicate that settings of ailerons neutral with the stick back and aileron against the spin (stick right in an inverted spin to the pilot's right) are adverse, whereas settings of stick forward and ailerons neutral or aileron with the spin led to steep spins with good recoveries. Unlike the results of the F3H-1N model tests (ref. 1), the F3H-2N recoveries from the criterion spin were unsatisfactory by movement of the rudder alone to two-thirds against the spin, but satisfactory recoveries were obtained by moving ailerons to two-thirds with the spin in conjunction with rudder reversal to two-thirds against the spin. During these recoveries, the general importance of maintaining full recovery controls to end airplane spins was emphasized by the fact that the model did not change its attitude and rotation appreciably until about one turn after the controls had been moved.

Brief inverted-spin tests were made with the model center of gravity moved back to 35 percent mean aerodynamic chord. The results of these tests are not presented in chart form but they indicate substantially the same inverted spin and recovery characteristics as obtained with the center of gravity at 30 percent mean aerodynamic chord.

Spin-Recovery Parachute

No spin-recovery parachute tests were made for erect spins of the F3H-2N model. Inasmuch as the results of the erect-spin tests made for the F3H-1N and F3H-2N models were similar, analysis indicates that the parachute recommended in reference 1 for satisfactory recoveries from emergency erect spins on the F3H-1N, or a parachute giving an equal drag, would also provide satisfactory emergency recoveries from erect spins on the F3H-2N airplane. On the F3H-1N, the parachute giving satisfactory recoveries was a tail parachute having a 16.7-foot diameter (full-scale laid-out-flat) with a 30-foot towline and a drag coefficient of 0.73 (based on the laid-out-flat diameter).

Parachute-recovery tests were made on the F3H-2N model during inverted spins to determine whether the same parachute installation recommended for erect spins would be satisfactory for recovery from inverted spins. The parachute attachment point used for these tests was at the same location used for the F3H-1N parachute tests, that is, on the bottom of the fuselage 2 feet (full scale) ahead of the most rearward point. The results of the tests are presented in table III and indicate that a parachute installed on the airplane to provide emergency recovery during erect spins would be sufficient to provide emergency recovery from inverted spins. As can be seen from the results presented, satisfactory recoveries were obtained with even smaller parachutes tested unless the ailerons were set more than one-third against the spin.

Landing Condition

Landing-condition tests were not included in this investigation inasmuch as current Navy specifications require this type of airplane to demonstrate satisfactory recoveries in the landing condition from only one-turn spins. At the end of one turn, the airplane probably will still be in an incipient spin from which recoveries are more readily obtained than from fully developed spins.

An analysis of model tests to determine the effect of landing flaps and landing gear (ref. 2) indicates that, in the event a spin is entered in the landing condition, the flaps and landing gear should be retracted and recovery attempted immediately.

CONCLUSIONS

Based on the results of spin tests of a 1/25-scale model of the McDonnell F3H-2N airplane in the combat gross-weight loading at an equivalent spin-test altitude of 20,000 feet, the following conclusions regarding the spin and recovery characteristics of the airplane at a spin-test altitude of 20,000 feet are made:

1. The erect spins obtained on the airplane will be wandering and oscillatory. The oscillations may become so violent that the airplane will oscillate out of the spin without movement of the controls. Satisfactory recoveries from spins will be obtained by rudder reversal to full against the spin accompanied by simultaneous movement of the ailerons to full with the spin (stick full right in a right spin). The stick should be held full back until the spin rotation ceases in order to avoid best the possibility of entering an aileron roll.

2. Satisfactory recoveries from inverted spins will be obtained by full rudder reversal to against the spin accompanied by simultaneous movement of the ailerons to full with the spin (stick full left in a spin to pilot's right). It is important to hold full recovery controls until the airplane recovers from the spin since the attitude and rotation of the spin may not change appreciably until after about one turn after the controls have been moved.

3. The gyroscopic moments obtained from engine rotation will have no appreciable effects on the spin and recovery characteristics of the airplane.

4. A 16.7-foot-diameter tail parachute with a towline 30.0 feet long and a drag coefficient of 0.73 will be satisfactory for emergency recoveries from erect and inverted demonstration spins.

5. If a spin is inadvertently entered in the landing condition at any time, the flaps and landing gear should be retracted and recovery should be attempted immediately.

Langley Aeronautical Laboratory,
National Advisory Committee for Aeronautics,
Langley Field, Va., April 1, 1957.

Henry A. Lee

Henry A. Lee
Aeronautical Research Engineer

Approved: Thomas A. Harris

Thomas A. Harris
Chief of Stability Research Division

sam

APPENDIX

TEST METHODS AND PRECISION

Model Testing Technique

The operation of the Langley 20-foot free-spinning tunnel is generally similar to that described in reference 3 for the Langley 15-foot free-spinning tunnel except that the model-launching technique is different. With the controls set in the desired position, a model is launched by hand with rotation into the vertically rising airstream. After a number of turns in the established spin, a recovery attempt is made by moving one or more controls by means of a remote-control mechanism. After recovery, the model dives into a safety net. The tests are photographed with a motion-picture camera. The spin data obtained from these tests are then converted to corresponding full-scale values by methods described in reference 3.

Spin-tunnel tests are usually performed to determine the spin and recovery characteristics of a model for the normal spinning-control configuration (elevator full up, lateral controls neutral, and rudder full with the spin) and for various other lateral control and elevator combinations including neutral and maximum settings of the surfaces. Recovery is generally attempted by rapid full reversal of the rudder, by rapid full reversal of both rudder and elevator, or by rapid full reversal of the rudder simultaneously with moving ailerons to full with the spin. The particular control manipulation required for recovery is generally dependent on the mass and dimensional characteristics of the model (refs. 4 and 5). Tests are also performed to evaluate the possible adverse effects on recovery of small deviations from the normal control configuration for spinning. For these tests, the elevator is set at either full-up or two-thirds of its full-up deflection and the lateral controls are set at one-third of full deflection in the direction conducive to slower recoveries, which may be either against the spin (stick left in a right spin) or with the spin depending primarily on the mass characteristics of the particular model. Recovery is attempted by rapidly reversing the rudder from full with the spin to only two-thirds against the spin, by simultaneous rudder reversal to two-thirds against the spin, and movement of the elevator to either neutral or two-thirds down, or by simultaneous rudder reversal to two-thirds against the spin and stick movement to two-thirds with the spin. This control configuration and manipulation are referred to as the "criterion spin," with the particular control settings and manipulation used being dependent on the mass and dimensional characteristics of the model.

Turns for recovery are measured from the time the controls are moved to the time the spin rotation ceases. Recovery characteristics of a model are generally considered satisfactory if recovery attempted from the criterion spin in any of the manners previously described is accomplished within $2\frac{1}{4}$ turns. This value has been selected on the basis of full-scale-airplane spin-recovery data that are available for comparison with corresponding model test results.

For spins in which a model has a rate of descent in excess of that which can readily be obtained in the tunnel, the rate of descent is recorded as greater than the velocity at the time the model hit the safety net; for example, >300 feet per second, full scale. In such tests, the recoveries are attempted before the model reaches its final steeper attitude and while it is still descending in the tunnel. Such results are considered conservative; that is, recoveries are generally not as fast as when the model is in the final steeper attitude. For recovery attempts in which a model strikes the safety net while it is still in a spin, the recovery is recorded as greater than the number of turns from the time the controls were moved to the time the model struck the net, as >3. A >3-turn recovery, however, does not necessarily indicate an improvement over a >7-turn recovery. A recovery of 10 or more turns is indicated by ∞. When a model recovers without control movement (rudder held with the spin), the results are recorded as "no spin."

For spin-recovery parachute tests, the minimum-size tail parachute required to effect recovery within $2\frac{1}{4}$ turns from the criterion spin is determined. The parachute is opened for the recovery attempts by actuating the remote-control mechanism, and the rudder is held with the spin so that recovery is due to the parachute action alone. The parachute towline is generally attached to the bottom rear of the fuselage. The folded spin-recovery parachute is placed on the model in such a position that it does not seriously influence the established spin. A rubber band holds the packed parachute to the model and when released allows the parachute to be blown free of the model. On full-scale parachute installations it is desirable to mount the parachute pack within the airplane structure, if possible, and it is recommended that a mechanism be employed for positive ejection of the parachute.

Precision

Results determined in free-spinning-tunnel tests are believed to be true values given by models within the following limits:

α, deg	± 1
ϕ, deg	± 1
V, percent	± 5
Ω, percent	± 2
Turns for recovery obtained from motion-picture records	$\pm \frac{1}{4}$
Turns for recovery obtained visually	$\pm \frac{1}{2}$

The preceding limits may be exceeded for certain spins in which it is difficult to control the model in the tunnel because of the high rate of descent or because of the wandering or oscillatory nature of the spin.

The accuracy of measuring the weight and mass distribution of models is believed to be within the following limits:

Weight, percent	± 1
Center-of-gravity location, percent $\bar{c}$	± 1
Moments of inertia, percent	± 5

Controls are set with an accuracy of $\pm 1^{\circ}$. The rotational rate of the flywheel simulating the engine was maintained within ± 10 percent of the desired values.

Variations in Model Mass Characteristics

Because it is impracticable to ballast models exactly and because of inadvertent damage to models during tests, the measured weight and mass distribution of the McDonnell F3H-2N model varied from the true scaled-down values within the following limits:

Weight, percent	0 to 1 high
Center-of-gravity location, percent $\bar{c}$	0 to 2 rearward
Moments of inertia:	
I_X, percent	0 to 5 high
I_Y, percent	0 to 2 high
I_Z, percent	0 to 2 high

Comparison Between Model and Airplane Results

Comparison between model and full-scale results in reference 6 indicated that model tests predicted accurately full-scale recovery characteristics approximately 90 percent of the time and that, for the remaining

10 percent of the time, the model results were of value in predicting some of the details of the full-scale spins, such as motions in the developed spin and proper recovery techniques. The airplanes generally spun at an angle of attack closer to 45° than did the corresponding models. The comparison presented in reference 6 also indicated that generally the airplanes spun with the inner wing tilted more downward and with a greater altitude loss per revolution than did the corresponding models, although the higher rate of descent was found to be generally associated with the smaller angle of attack regardless of whether it was for the model or the airplane.

REFERENCES

1. Lee, Henry A., and Wilkes, L. Faye: Interim Report on Free-Spinning-Tunnel Investigation of a 1/25-Scale Model of the McDonnell F3H-1N Airplane - TED No. NACA AD 3100. NACA RM SL55A10a, Bur. Aero., 1955.

2. Gale, Lawrence J.: Effect of Landing Flaps and Landing Gear on the Spin and Recovery Characteristics of Airplanes. NACA TN 1643, 1948.

3. Zimmerman, C. H.: Preliminary Tests in the N.A.C.A. Free-Spinning Wind Tunnel. NACA Rep. 557, 1936.

4. Neihouse, A. I.: A Mass-Distribution Criterion for Predicting the Effect of Control Manipulation on the Recovery From a Spin. NACA WR L-168, 1942. (Formerly NACA ARR, Aug. 1942.)

5. Neihouse, Anshal I., Lichtenstein, Jacob H., and Pepoon, Philip W.: Tail-Design Requirements for Satisfactory Spin Recovery. NACA TN 1045, 1946.

6. Berman, Theodore: Comparison of Model and Full-Scale Spin Test Results for 60 Airplane Designs. NACA TN 2134, 1950.

TABLE I.- DIMENSIONAL CHARACTERISTICS OF THE

McDONNELL F3H-2N AIRPLANE

Overall length, ft	58.81
Wing:	
Span, ft	35.33
Area, sq ft	519
Root chord, in.	250
Tip chord, in.	103
Incidence, deg	2.0
Taper ratio	0.4
Aspect ratio	2.4
Sweepback at 0.25 chord, deg	43
Dihedral, deg	0
Mean aerodynamic chord, in.	186.7
Leading edge $\bar{c}$ rearward of leading-edge root chord, in.	101.5
Trailing-edge flaps:	
Total area, sq ft	30.72
Total span, percent b	25.43
Aileron:	
Total area, rearward of hinge line, sq ft	31.30
Total span, percent b	33.96
Horizontal-tail surface (all-movable):	
Total area, sq ft	82.49
Span, ft	15.75
Sweepback at 0.25 chord, deg	45.00
Distance from combat gross-weight loading center of gravity to intersection of the horizontal-tail hinge line and fuselage center line, ft	25.04
Vertical-tail surfaces.	
Total area, sq ft	48.20
Rudder area, rearward of hinge line, sq ft	11.30
Sweepback at 0.25 chord, deg	45.00
Distance from combat gross-weight loading center of gravity to intersection of rudder hinge line and the theoretical tip of the vertical tail, ft	29.00
Tail-damping-power factor	0

TABLE II.- MASS CHARACTERISTICS AND INERTIA PARAMETERS FOR THE McDONNELL F3H-2N AIRPLANE

AND FOR THE LOADING TESTED ON THE 1/25-SCALE MODEL

[Model values converted to corresponding full-scale values; moments of inertia are given about the center of gravity.]

Loading	Weight, lb	Center-of-gravity location		Relative density, μ, at -		Moments of inertia, slug-ft^2			Mass parameters		
		$\frac{x}{\bar{c}}$	$\frac{z}{\bar{c}}$	Sea level	20,000 ft	I_X	I_Y	I_Z	$\frac{I_X - I_Y}{mb^2}$	$\frac{I_Y - I_Z}{mb^2}$	$\frac{I_Z - I_X}{mb^2}$
Full-scale airplane values											
Combat gross weight	26,878	0.299	0.091	19.15	35.94	16,503	83,084	93,134	-639×10^{-4}	-96×10^{-4}	735×10^{-4}
Model values											
Combat gross weight	27,064	0.30	0.047	19.27	36.16	17,363	84,788	95,291	-643×10^{-4}	-100×10^{-4}	743×10^{-4}

TABLE III.- SPIN-RECOVERY TAIL-PARACHUTE DATA OBTAINED WITH THE 1/25-SCALE MODEL OF THE McDONNELL F3H-2N AIRPLANE IN INVERTED SPINS

[Combat gross-weight loading (table II); rudder fixed full with spin and elevator full down (stick forward); recoveries attempted by opening parachute only; model values converted to corresponding full-scale values; inverted spins to pilot's right]

Parachute diameter, ft	Towline length, ft	Parachute drag coefficient	Ailerons	Turns for recovery
12.5	30	0.63	$\frac{1}{3}$ against	$\frac{1}{2}$, 1, $1\frac{1}{2}$, 1, $1\frac{1}{4}$, $\frac{3}{4}$
15.6	30	.63	$\frac{1}{3}$ against	1, $\frac{1}{2}$, $1\frac{1}{4}$, $\frac{1}{4}$, $\frac{1}{4}$, $\frac{1}{2}$
15.6	15	.63	$\frac{1}{3}$ against	1, $\frac{1}{2}$, 1, $\frac{1}{2}$, $\frac{1}{2}$, 1
15.6	15	.63	Full against	2, $\frac{1}{2}$, $\frac{3}{4}$, $2\frac{1}{2}$, $2\frac{1}{4}$, $3\frac{1}{2}$
15.6	30	.63	Full against	$\frac{1}{2}$
16.7	30	.63	$\frac{1}{3}$ against	$\frac{1}{4}$, $\frac{1}{2}$, $\frac{1}{2}$, $\frac{1}{4}$
20.8	30	.64	$\frac{1}{3}$ against	$\frac{1}{4}$, $\frac{1}{4}$, $\frac{1}{4}$, $\frac{1}{4}$, $\frac{1}{4}$

CHART 1.- ERECT-SPIN AND RECOVERY CHARACTERISTICS OF THE MODEL

[Combat gross-weight loading (table II); landing gear retracted; recoveries attempted by full rudder reversal and aileron movement to full with the spin (recovery attempted from and developed-spin data presented for rudder-full-with spins); right erect spins]

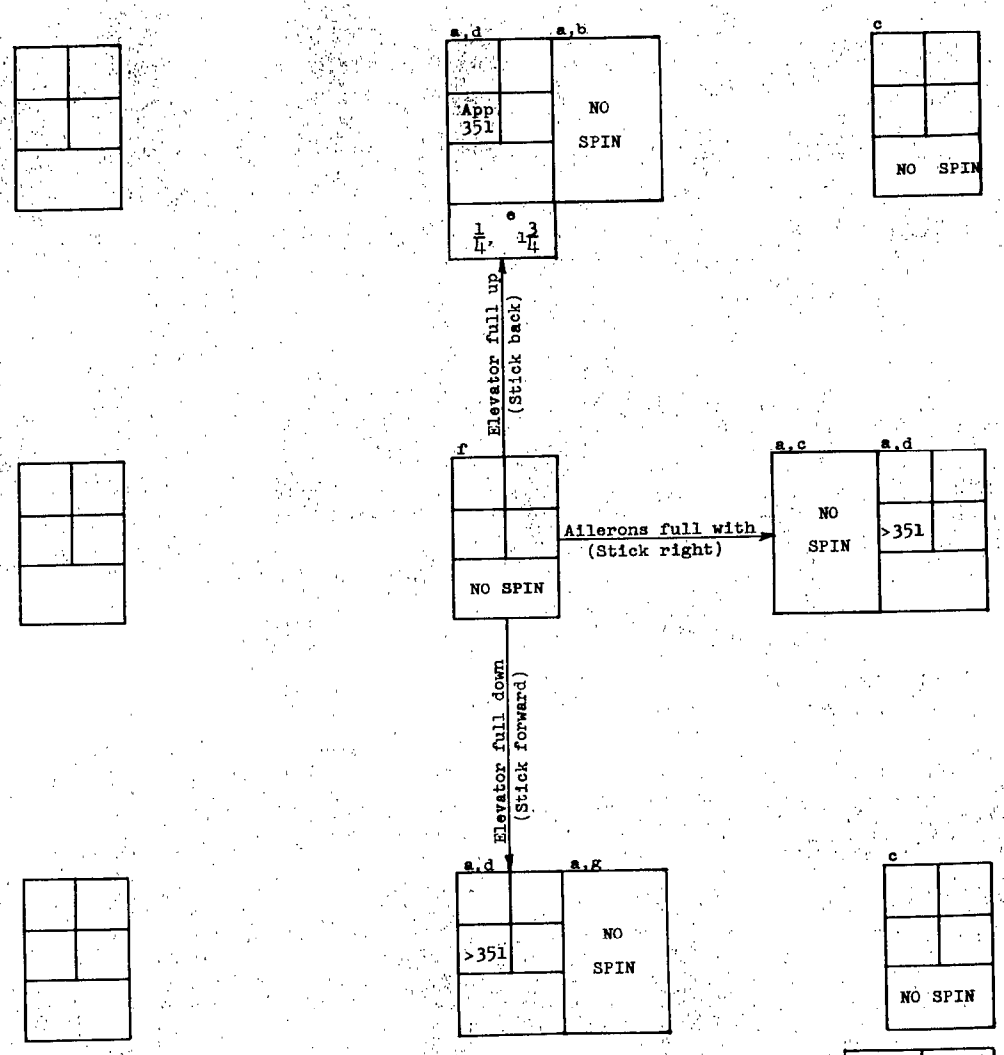

α (deg)	ϕ (deg)
V (fps)	Ω (rps)
Turns for recovery	

Model values converted to corresponding full-scale values.
U inner wing up
D inner wing down

[a]Two conditions possible.

[b]Model motion became oscillatory in roll and yaw until model rolled out and dived or went into an inverted spin.

[c]Model motion became oscillatory, then rolled out in the direction of the aileron setting into a steep aileron roll.

[d]A high-velocity wandering spin oscillatory in roll, yaw, and pitch.

[e]Went into an inverted spin to pilot's left.

[f]Model motion became oscillatory, then model dived out.

[g]Model motion became oscillatory, then model dived out inverted.

CHART 2.- INVERTED-SPIN AND RECOVERY CHARACTERISTICS OF THE MODEL

[Combat gross-weight loading (table II); recovery attempted by rapid full rudder reversal except as indicated (recovery attempted from and developed-spin data presented for rudder-full-with spins); model rotation to pilot's right]

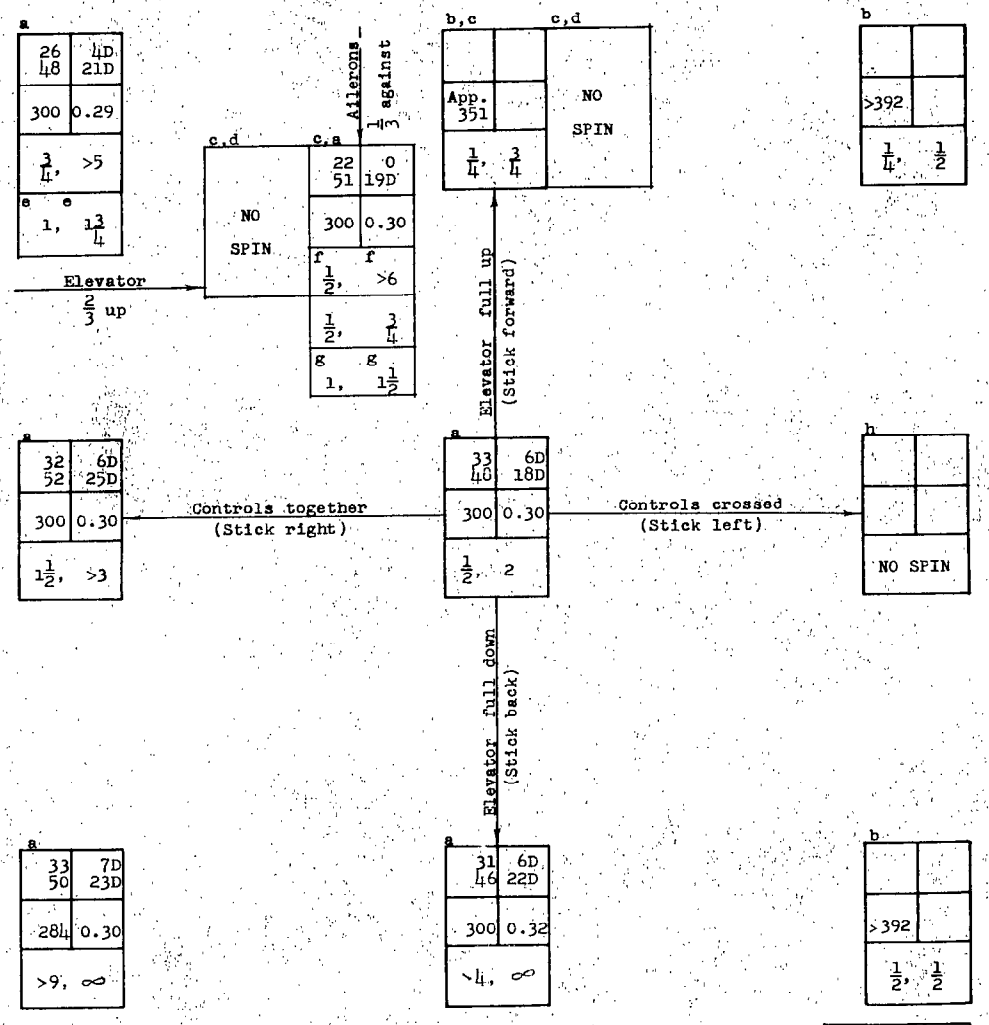

[a]Oscillatory spin, range or average values given.

[b]Steep spin.

[c]Two conditions possible.

[d]Model motion became oscillatory, then model dived out.

[e]Recovery attempted by reversing rudder from full with to full against the spin simultaneously with aileron movement from full against to full with the spin.

[f]Recovery attempted by reversing rudder from full with to $\frac{2}{3}$ against the spin.

[g]Recovery attempted by reversing rudder from full with to $\frac{2}{3}$ against the spin simultaneously with aileron movement from $\frac{1}{3}$ against to $\frac{2}{3}$ with the spin.

[h]Model recovered in a steep aileron roll.

α (deg)	ϕ (deg)
V (fps)	Ω (rps)
Turns for recovery	

Model values converted to corresponding full-scale values.
U inner wing up
D inner wing down

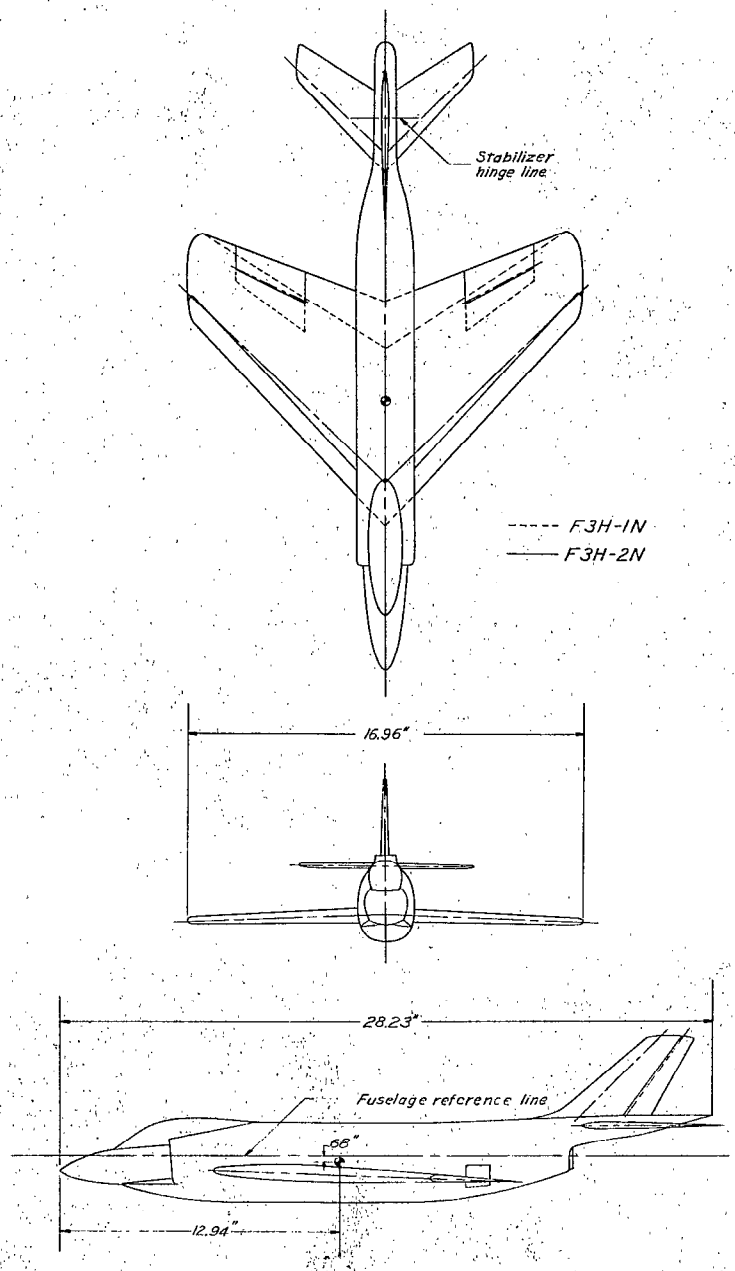

Figure 1.- Three-view drawing of the 1/25-scale model of the McDonnell F3H-2N airplane as tested in the Langley 20-foot free-spinning tunnel with a comparison drawing of the McDonnell F3H-1N. Dimensions are model values; center-of-gravity position shown for the combat gross-weight loading.

[redacted]

FREE-SPINNING-TUNNEL INVESTIGATION OF A 1/25-SCALE MODEL OF THE McDONNELL F3H-2N AIRPLANE

TED NO. NACA AD 3100

By Henry A. Lee

ABSTRACT

An investigation was conducted in the Langley 20-foot free-spinning tunnel on a 1/25-scale model to determine the spin and recovery characteristics of the McDonnell F3H-2N airplane. Satisfactory recoveries from erect or inverted spins should be obtained by rudder reversal to full against the spin accompanied by simultaneous movement of the ailerons to full with the spin. A 16.7-foot-diameter tail parachute with a towline length of 30 feet and a drag coefficient of 0.73 should be satisfactory for emergency recoveries from erect and inverted spins.

INDEX HEADINGS

Airplanes - Specific Types	1.7.1.2
Spinning	1.8.3
Mass and Gyroscopic Problems	1.8.6
Piloting Techniques	7.7

[redacted]

NASA Technical Library
3 1176 01437 9318

L

[redacted]