Library
R.A. 1418
Inactive
Grumman TB3F-1
CONFIDENTIAL
RM No. L7E19
MAY 15 1947
UNCLASSIFIED
CLASSIFICATION CHANGED
RESTRICTED
SECURITY INFORMATION
By authority of H. L. Dryden Date 6-5-53
per NACA Release form #1431 By HJR, 7-16-53

# RESEARCH MEMORANDUM

for the

Bureau of Aeronautics, Navy Department

CLASSIFICATION CANCELLED
Authority J. W. Crowley Date 12/14/53
E6 10571
By Dn 4/4 1/20/54 See next
R7 2119

## FREE-SPINNING TUNNEL TESTS OF A $\frac{1}{24}$-SCALE MODEL OF THE GRUMMAN XTB3F-1 AIRPLANE

TED NO. NACA DE304

By

Theodore Berman

Langley Memorial Aeronautical Laboratory
Langley Field, Va.

TECHNICAL EDITING WAIVED

CONTAINS PROPRIETARY INFORMATION

CLASSIFIED DOCUMENT

This document contains classified information affecting the National Defense of the United States within the meaning of the Espionage Act, USC 50:31 and 32. Its transmission or the revelation of its contents in any manner to an unauthorized person is prohibited by law. Information so classified may be imparted only to persons in the military and naval services of the United States, appropriate civilian officers and employees of the Federal Government who have a legitimate interest therein, and to United States citizens of known loyalty and discretion who of necessity must be informed thereof.

NATIONAL ADVISORY COMMITTEE FOR AERONAUTICS

WASHINGTON

MAY 9 1947

NACA LIBRARY
LANGLEY MEMORIAL AERONAUTICAL LABORATORY
Langley Field, Va.

RESTRICTED
CONFIDENTIAL
SECURITY INFORMATION
UNCLASSIFIED

NASA Technical Library
3 1176 01437 5092



UNCLASSIFIED

NATIONAL ADVISORY COMMITTEE FOR AERONAUTICS

RESEARCH MEMORANDUM

for the

Bureau of Aeronautics, Navy Department

# FREE-SPINNING TUNNEL TESTS OF A $\frac{1}{24}$-SCALE MODEL OF THE GRUMMAN XTB3F-1 AIRPLANE

TED NO. NACA DE304

By Theodore Berman

## SUMMARY

An investigation of the spin and recovery characteristics of a $\frac{1}{24}$-scale model of the Grumman XTB3F-1 airplane has been conducted in the Langley 20-foot free-spinning tunnel. The effects of control settings and movements on the erect and inverted spin and recovery characteristics of the model were determined. The investigation also included spin-recovery-parachute, pilot-escape, and control-force tests.

Recoveries that were satisfactory according to the spin tunnel criterion were obtained from left spins by rudder reversal alone. It was necessary to move the elevator down in conjunction with rudder reversal, however, to obtain satisfactory recoveries from right spins, and it was found that premature movement of the elevator down would lead to unsatisfactory recoveries. Recoveries were rapid from all inverted spins obtained. It was found that a 16-foot spin-recovery parachute at the tail or an 8-foot parachute opened on the outer wing tip (drag coefficient of 0.65) would be effective for recoveries from demonstration spins. Reversal of the rudder in conjunction with opening the parachute reduced the diameter of the tail parachute required to 15 feet. Test results showed that in an emergency the pilot should attempt to escape from the outboard side of the spinning airplane, and that the control forces in a spin would be within the capabilities of the pilot.

RESTRICTED
SECURITY INFORMATION
CONFIDENTIAL

UNCLASSIFIED

NASA Technical Library
3 1176 01437 5092



UNCLASSIFIED

NATIONAL ADVISORY COMMITTEE FOR AERONAUTICS

RESEARCH MEMORANDUM

for the

Bureau of Aeronautics, Navy Department

# FREE-SPINNING TUNNEL TESTS OF A $\frac{1}{24}$-SCALE MODEL OF THE GRUMMAN XTB3F-1 AIRPLANE

TED NO. NACA DE304

By Theodore Berman

## SUMMARY

An investigation of the spin and recovery characteristics of a $\frac{1}{24}$-scale model of the Grumman XTB3F-1 airplane has been conducted in the Langley 20-foot free-spinning tunnel. The effects of control settings and movements on the erect and inverted spin and recovery characteristics of the model were determined. The investigation also included spin-recovery-parachute, pilot-escape, and control-force tests.

Recoveries that were satisfactory according to the spin tunnel criterion were obtained from left spins by rudder reversal alone. It was necessary to move the elevator down in conjunction with rudder reversal, however, to obtain satisfactory recoveries from right spins, and it was found that premature movement of the elevator down would lead to unsatisfactory recoveries. Recoveries were rapid from all inverted spins obtained. It was found that a 16-foot spin-recovery parachute at the tail or an 8-foot parachute opened on the outer wing tip (drag coefficient of 0.65) would be effective for recoveries from demonstration spins. Reversal of the rudder in conjunction with opening the parachute reduced the diameter of the tail parachute required to 15 feet. Test results showed that in an emergency the pilot should attempt to escape from the outboard side of the spinning airplane, and that the control forces in a spin would be within the capabilities of the pilot.

RESTRICTED
SECURITY INFORMATION
CONFIDENTIAL

UNCLASSIFIED

## INTRODUCTION

In accordance with a request of the Bureau of Aeronautics, Navy Department, tests were performed in the Langley 20-foot free-spinning tunnel to determine the spin and recovery characteristics of a $\frac{1}{24}$-scale model of the Grumman XTB3F-1 airplane. The airplane is a two-place, midwing torpedo bomber equipped with a tractor propeller and an auxiliary jet engine.

The effect of control setting and movement on the erect and inverted spin and recovery characteristics of the model were determined for the normal loading. Brief tests with mass extended slightly along the fuselage were also made, however, in order to determine the effect of such a mass variation on elevator effectiveness. Tests were performed to determine the size of emergency spin-recovery tail and wing-tip parachutes required for satisfactory recovery by parachute action alone. The investigation also included emergency pilot-escape tests and tests to determine the rudder pedal and elevator stick forces necessary to move the rudder and elevator for recovery.

## SYMBOLS

| | |
|---|---|
| $b$ | wing span, feet |
| $S$ | wing area, square feet |
| $\bar{c}$ | mean aerodynamic chord, feet |
| $x/\bar{c}$ | ratio of distance of center of gravity rearward of leading edge of mean aerodynamic chord to mean aerodynamic chord |
| $z/\bar{c}$ | ratio of distance between center of gravity and thrust line to mean aerodynamic chord (positive when center of gravity is below thrust line) |
| $m$ | mass of airplane, slugs |
| $I_X$, $I_Y$, $I_Z$ | moments of inertia about X, Y, and Z body axes, respectively, slug-feet$^2$ |
| $\frac{I_X - I_Y}{mb^2}$ | inertia yawing-moment parameter |

$\frac{I_Y - I_Z}{mb^2}$ inertia rolling-moment parameter

$\frac{I_Z - I_X}{mb^2}$ inertia pitching-moment parameter

$\rho$ air density, slug per cubic foot

$\mu$ relative density of airplane $\left(\frac{m}{\rho Sb}\right)$

$\alpha$ angle between thrust line and vertical (approximately equal to absolute value of angle of attack at plane of symmetry), degrees

$\phi$ angle between span axis and horizontal, degrees

$V$ full-scale true rate of descent, feet per second

$\Omega$ full-scale angular velocity about spin axis, revolutions per second

$\sigma$ helix angle, angle between flight path and vertical, degrees (For the tests of this model, the average absolute value of the helix angle was approximately $3^{\circ}$.)

$\beta$ approximate angle of sideslip at center of gravity, degrees (Sideslip is inward when inner wing is down by an amount greater than the helix angle.)

## APPARATUS AND METHODS

### Model

The $\frac{1}{24}$-scale model of the Grumman XTB3F-1 airplane was furnished by the Bureau of Aeronautics, Navy Department, and was checked for dimensional accuracy and prepared for testing by the Langley Laboratory. A three-view drawing of the model as tested is shown in figure 1. A photograph of the model in the normal loading, clean condition is shown in figure 2. In the photograph, the radar unit

normally on the model was inadvertently omitted. The dimensional characteristics of the model as tested are given in table I. The tail-damping power factor was computed by the method given in reference 1.

The model was ballasted with lead weights to obtain dynamic similarity to the airplane at an altitude of 25,000 feet ($\rho$ = 0.001065 slug per cubic foot) rather than the usual 15,000 feet, due to the relatively heavy construction of the model. A remote-control mechanism was installed in the model to actuate the controls or open the parachute for recovery tests, and also to release the pilot for the emergency escape tests. Sufficient moments were exerted on the control surfaces during recovery tests to reverse the controls fully and rapidly.

A $\frac{1}{24}$-scale model pilot was built and ballasted at the Langley Laboratory to represent the pilot and parachute (200 pounds) at 25,000 feet for the pilot-escape tests.

The propeller was not simulated on the model because the results of previous tests (data unpublished) have indicated little effect of a windmilling propeller on the spin characteristics of conventional airplanes.

## Wind Tunnel and Testing Technique

The model tests were performed in the Langley 20-foot free-spinning tunnel, the operation of which is generally similar to that described in reference 2 for the Langley 15-foot free-spinning tunnel, except that the model-launching technique has been changed. With the controls set in the desired position, the model is launched by hand with rotation into the vertically rising air stream. After a number of turns in the established spin, recovery is attempted by moving one or more controls by means of a remote-control mechanism. After recovery, the model dives into a safety net. The model is retrieved, the controls reset, and the next spin is made. A photograph of the model during a spin is shown in figure 3.

The data presented were determined by methods described in reference 2 and have been converted to corresponding full-scale values. The turns for recovery are measured from the time the controls are moved, or the parachute is opened, to the time the spin rotation ceases and the model dives into the net. For the spins which had a rate of descent in excess of that which can readily be attained in the tunnel, the rate of descent was recorded

as greater than the velocity at the time the model hit the safety net, for example, > 300. For these tests, the recovery was attempted before the model reached its final steeper attitude and while the model was still descending in the tunnel. Such results are conservative, that is, recoveries will not be as fast as when the model is in the final steeper attitude. For recovery attempts in which the model struck the safety net while it was still in a spin, the recovery was recorded as greater than the number of turns from the time the controls were moved to the time the model struck the net, as > 3. A > 3-turn recovery does not necessarily indicate an improvement over a > 7-turn recovery. For recovery attempts in which the model did not recover, the recovery was recorded as $\infty$. When the model recovered without control movement, with the controls with the spin, the result was recorded as "No spin."

Spin-tunnel tests are made to determine the spin and recovery characteristics of the model for the normal spinning control configuration (elevator full up, ailerons neutral, and rudder full with the spin) and at various other aileron-elevator-control combinations including zero and maximum deflections. Recovery is generally attempted by rapid full rudder reversal. Tests are also performed to evaluate the possible adverse effects on recovery of small deviations from the normal control configuration for spinning. For these tests, the ailerons are set at one-third of the full deflection in the direction conducive to slower recoveries (against the spin for the XTB3F-1 model), and the elevator is set at two-thirds of its full-up deflection. Recovery is attempted by either rapidly reversing the rudder from full with the spin to two-thirds against the spin or by movement of the rudder to two-thirds against the spin in conjunction with moving the elevator to one-third down. This control configuration and movement is referred to as the "criterion spin." The criterion for a satisfactory recovery from this criterion spin in the spin tunnel has been adopted as $2\frac{1}{4}$ turns or less by rudder reversal or a combination of rudder and elevator reversal. This value has been selected on the basis of spin-tunnel experience and on the basis of comparable full-scale spin-recovery data that are available.

The testing technique for determining the optimum size of, and the towline length for, spin-recovery parachutes is described in detail in reference 3. For the tail parachute tests, the parachute pack and towline were attached to the model near the rear of the fuselage below the horizontal tail on the inboard side of the fuselage. Wing-tip parachutes were attached to the outer wing tip (left wing tip in a right spin). When the parachute was attached to the wing tip, the towline length was so adjusted that

the parachute would just clear the horizontal tail. In every case, the folded parachute was placed on the fuselage or wing in such a position that it did not seriously influence the steady spin before the parachute was opened. It is recommended that for full-scale wing-parachute installation, the parachute be packed within the airplane structure. All parachutes should be provided with a positive means of ejection. For most of the current tests, the controls were not moved during recovery so that recovery was due entirely to the effect of opening the parachute. For a few tests, however, the rudder was reversed in conjunction with opening the parachute. Silk parachutes having a drag coefficient of approximately 0.65 (based upon the canopy area measured with the parachute spread out flat) were used for the spin-recovery parachute tests.

For the tests to determine from which side of the spinning airplane it would be best for the pilot to make an emergency escape, a model pilot was released from the inboard and outboard side of the fuselage at the cockpit in both steep and flat spins.

Tests to determine the control forces required for spin recovery were made by systematically reducing separately the tension in the rudder and elevator cables used in the model. From these tests, the tension in the rubber bands which pull the rudder from with to against the spin and the elevator from up to down was adjusted to represent known hinge moments about the respective hinge axes. Recovery tests were then run with the tension in the rubber band being reduced systematically until the turns for recovery began to increase. When the turns for recovery started to increase, it was indicated that the control either was not fully reversing or was reversing slowly. The tension at this point was taken as the minimum tension which should be applied and was converted to corresponding full-scale rudder-pedal and elevator-stick forces at the equivalent altitude at which the tests were run.

## PRECISION

The model test results presented are believed to be the true values given by the model within the following limits:

| | |
|---|---|
| $\alpha$, degree | ±1 |
| $\phi$, degree | ±1 |
| V, percent | ±5 |
| $\Omega$, percent | ±2 |
| Turns for recovery | ±1/4 from motion picture records<br>±1/2 from visual observation |

The preceding limits may have been exceeded for some of the spins in which it was difficult to control the model in the tunnel because of the high rate of descent or because of the wandering or oscillatory nature of the spin.

Comparison between model and full-scale results (references 2 and 4) indicates that spin-tunnel results are not always in complete agreement with airplane spin results. In general, the models spin at a somewhat smaller angle of attack, at a somewhat higher rate of descent, and at from 5° to 10° more outward sideslip than did the airplanes. The comparison made in reference 4 for 20 airplanes showed that 80 percent of the models predicted satisfactorily the number of turns required for recovery from the spin for the corresponding airplanes and that 10 percent overestimated and 10 percent underestimated the number of turns required. Little can be stated about the precision of the pilot-escape tests because no comparable airplane data are available. It is felt, however, that if the model pilot is observed to clear all parts of the model by a large margin after being released, then the tests indicate that the pilot can safely escape.

Because it is impracticable to ballast the model exactly, and because of the inadvertent damage to the model during tests, the measured weight and mass distribution of the XTB3F-1 model varied from the true scaled-down values within the following limits:

| | | |
|---|---|---|
| Weight, percent | | 0 to 1 high |
| Center-of-gravity location, percent $\bar{c}$ | | 0 to 1 rearward of normal |
| Moments of inertia | $I_X$, percent | 2 high to 8 high |
| | $I_Y$, percent | 1 high to 9 high |
| | $I_Z$, percent | 0 to 7 high |

The accuracy of measuring the weight and mass distribution is believed to be within the following limits:

| | |
|---|---|
| Weight, percent | ±1 |
| Center-of-gravity location, percent $\bar{c}$ | ±1 |
| Moments of inertia, percent | ±5 |

Controls were set with an accuracy of ±1°.

## TEST CONDITIONS

Tests were performed for the model conditions listed on table II. The mass characteristics and inertia parameters for loadings possible on the airplane and for the loadings of the model during tests are

shown on table III. The inertia parameters for the loadings possible on the XTB3F-1 airplane and for the loadings tested on the model are also shown in figure 4. As discussed in reference 5, figure 4 can be used in predicting the relative effectiveness of the controls on the recovery characteristics of the model.

The maximum control deflections used in the tests were:

| | |
|---|---|
| Rudder, degrees . . . . . | 30 right, 30 left |
| Elevator, degrees . . . . . | 30 up, 15 down |
| Ailerons, degrees . . . . . | 17 up, 17 down |

Intermediate control deflections used were:

| | |
|---|---|
| Rudder, two-thirds deflected, degrees . . . . . | 20 |
| Elevator, two-thirds up, degrees . . . . . | 20 |
| Elevator, one-third down, degrees . . . . . | 5 |
| Ailerons, one-third deflected, degrees . . . . . | $5\frac{2}{3}$ |

## RESULTS AND DISCUSSION

The results of the spin tests of the model are presented on charts 1 and 2 and on tables IV and V. The model data are presented in terms of the full-scale values for the airplane at a test altitude of 25,000 feet. Based on spin-tunnel experience, it is felt that the current results are probably somewhat conservative as compared to corresponding results which would be obtainable at some altitude such as 15,000 feet. All tests were performed with the model in the clean condition (cockpit closed, flaps neutral, landing gear retracted).

### Normal Loading

Erect spins.- The results of erect spin tests of the model in the normal loading (loading point 1 on table III and figure 4) are shown on chart 1. Aileron-with spins were extremely steep and recoveries were very rapid. When the ailerons were neutral or against the spin, spins with the elevator up were steep and oscillatory but spins with the elevator neutral or down were flatter ($\alpha$ approximately $50^{\circ}$). A decided asymmetry in recoveries was found in right and left spins. Recoveries from left spins for the normal control configuration for spinning and the criterion spin were satisfactorily obtained by rudder reversal alone. From right

spins, however, recovery could not be obtained in 4 turns after the rudder alone was reversed from the criterion spin, or in $2\frac{1}{2}$ turns from the normal control configuration for spinning. Satisfactory recoveries were obtained, however, for the criterion spin and the normal control configuration to the right when the rudder and elevator were reversed simultaneously. Inasmuch as tests with the elevators down showed flat spins with slow recoveries, this result appears to be due to the dynamic action of the elevator. This effect was further investigated and it was found that satisfactory recoveries from the criterion spin to the right could be obtained by simultaneously reversing the rudder and only neutralizing the elevator. Tests to determine the influence of the radar unit on the asymmetrical results (data not presented) showed that with the radar unit removed, the model spin and recovery characteristics were not changed. Previous tests with a model showing similar asymmetry (reference 6) indicated that fin offset was the cause of the asymmetry. Accordingly, brief tests (data not presented) were made with the fin offset removed. These tests showed that the asymmetry was largely due to the fin offset.

Time lag between rudder and elevator movement.- Test data presented in table IV show the effect of time lag between rudder and elevator movement.

Results of tests with the elevator moved after rudder reversal show that as the time lag was increased, the turns for recovery increased with recovery always following very quickly after the elevator was moved. These results confirmed previous tests in showing that the rudder is not sufficiently effective alone but that the dynamic action of the elevator is necessary to effect recoveries. When the elevator was moved down ahead of the rudder movement, however, recoveries became unsatisfactory. As this time lag was increased, recoveries became slower until, when the time lag was large, the model would not recover when this recovery technique was employed. These data indicate that rudder reversal should precede elevator-down movement by a short interval (approximately 1/2 turn).

Inverted spins.- The results of the inverted spin tests of the model in the normal loading are presented on chart 2. The order used for presenting the data for inverted spins is different from that used for erect spins. For inverted spins "controls crossed" for the established spin (right rudder pedal forward and stick to pilot's left for a spin to the pilot's right) is presented to the right of the chart and stick back is presented at the bottom. When the controls are crossed in the established spin, the ailerons aid

the rolling motion; when the controls are together the ailerons oppose the rolling motion. The angle of wing tilt $\phi$ on the chart is given as up or down relative to the ground.

The inverted spin-recovery characteristics were satisfactory. The model would spin only when the stick was laterally neutral or when the controls were crossed in the developed spin. Recovery from these spins by reversal of the rudder was rapid.

## Mass Changes and Center-of-Gravity Movement

Because satisfactory recoveries from right spins depended on moving the elevator down in conjunction with rudder reversal, and the data in reference 4 indicate that increasing the mass along the fuselage would decrease the elevator effectiveness, brief tests (data not presented) were made with the mass along the fuselage increased ($I_Y$ and $I_Z$ increased approximately 10 percent of $I_Y$). These tests indicated no appreciable loss of elevator effectiveness.

Based on spin-tunnel experience, it was felt that other moderate changes in the mass distribution or the center-of-gravity location would not appreciably affect the spin and recovery characteristics of this model. Inasmuch as no large changes of center-of-gravity location or mass distribution appear likely on this airplane, no other tests were considered necessary.

## Spin-Recovery Parachutes

The results of spin-recovery-parachute tests are presented in table V. The results show that a tail parachute 16 feet in diameter (full scale) will be necessary for satisfactory recovery by parachute action alone from the spin at normal spinning control configuration. Recoveries were also attempted from this spin by opening the parachute in conjunction with rudder reversal. In this latter instance satisfactory recoveries could be obtained by use of a 15-foot parachute. Tests were also made by opening the 15-foot parachute in conjunction with rudder reversal when the model was in a flat spin. Recoveries thus obtained from this spin (ailerons against, elevator neutral) were also satisfactory. For the tail parachute tests, a towline approximately 30 feet long was used. Satisfactory recoveries were also obtained by opening an 8-foot-diameter parachute (maintaining rudder with the spin) attached to the outboard wing tip with a 10-foot towline. At the time the wing-tip-parachute tests were made, tunnel operating conditions

were such that it was difficult to obtain high tunnel velocities, and accordingly it was necessary to attempt recovery before the model reached its final steep attitude and corresponding higher rate of descent. The wing-tip-parachute tests may therefore be considered as somewhat conservative.

The model parachute as tested had values of drag coefficient of approximately 0.65. If a parachute with a different drag coefficient is used on the airplane, a corresponding adjustment will be required in parachute size.

## Pilot-Escape Tests

It was observed during the tests performed to determine from which side of the spinning airplane the pilot should attempt an emergency escape that the model pilot went over the trailing edge of the wing and cleared the tail of the airplane when released from the outboard side for either flat or steep spins. When released from the inboard side in a steep spin, the model pilot went over the fuselage, behind the trailing edge of the outboard wing, and then close to the tail. When released from the inboard side in a flat spin, the pilot went forward over the leading edge of the wing into or close to the propeller disk. These results indicate that the pilot should jump from the outboard side if it is necessary to abandon the airplane in a spin.

## Landing Condition

The landing condition was not tested on this model inasmuch as current Navy specifications do not require this type of airplane to pass spin demonstrations in the landing condition.

An analysis of full-scale and model tests to determine the effect of flaps and landing gear, in the event that the airplane is inadvertently spun in these conditions, indicates that although the XTB3F-1 airplane will probably recover satisfactorily from an incipient spin in the landing condition, recoveries from fully developed spins will probably be unsatisfactory. Therefore in order to avoid entering a fully developed spin, it is recommended that the flaps be neutralized and recovery attempted immediately upon inadvertently entering a spin in the landing condition.

## Control Forces

The discussion of the results so far has been based on control effectiveness alone without regard to the forces required to move the controls. As previously mentioned, for all tests sufficient force was applied to the controls to move them fully and rapidly. Sufficient force must be applied to the airplane controls to move them in a similar manner in order for the model and airplane results to be comparable.

A few tests were performed with the model in the normal loading in which the forces applied to the rudder and elevator in order to effect a satisfactory recovery were measured. The results indicated that the full-scale pedal and stick forces would both be within the capabilities of the pilot. The rudder force was found to be approximately 150 pounds and the elevator force was found to be approximately 40 pounds from the model tests. Because of lack of detail in the rudder and elevator balances of the model, of inertia mass balance effects, and of scale effect, these results are only qualitative indications of the actual forces that may be experienced.

## Recommended Recovery Technique

Based on the results obtained with the model, the following recommendations are made as to recovery technique for all loadings and conditions of the airplane.

For erect spins, the rudder should be reversed briskly from full with the spin to full against the spin followed 1/2 turn later, by movement of the stick forward maintaining it laterally neutral; care should be exercised to avoid moving the stick forward before the rudder has been completely reversed and also to avoid excessive rates of acceleration in the ensuing recovery dive. If an accidental spin is entered with flaps extended, the flaps should be retracted and recovery attempted immediately.

For recovery from inverted spins, the rudder should be reversed briskly and the stick moved to neutral (laterally and longitudinally).

## CONCLUSIONS

Based on results of spin tests of a $\frac{1}{24}$-scale model of the Grumman XTB3F-1 airplane, the following conclusions regarding the spin and recovery characteristics of the airplane at a spin altitude of 25,000 feet are made:

1. The spin will be somewhat oscillatory and the recovery characteristics of the airplane will be satisfactory for all loading conditions. The rudder should be reversed fully and rapidly, followed 1/2 turn later by movement of the stick forward of neutral, while maintaining it laterally neutral.

2. Recoveries from inverted spins will be satisfactory and should be made by rapid full rudder reversal and stick neutralization.

3. A 16.0-foot-tail parachute with a towline of 30.0 feet or an 8.0-foot parachute with a towline of 10.0 feet opened on the outer wing tip will be satisfactory for emergency recoveries from spins. These sizes are based on a drag coefficient of approximately 0.65 for the laid out flat surface area.

4. If necessary to abandon the airplane in a spin, the pilot should leave from the outboard side.

5. The pedal and stick forces necessary to move the controls to effect satisfactory recovery will be within the physical capability of the pilot.

Langley Memorial Aeronautical Laboratory
National Advisory Committee for Aeronautics
Langley Field, Va.

Theodore Berman
Theodore Berman
Aeronautical Engineer

Approved: Thomas A. Harris
for Hartley A. Soulé
Chief of Stability Research Division

MEL

REFERENCES

1. Neihouse, Anshal I., Lichtenstein, Jacob H., and Pepoon, Philip W.: Tail-Design Requirements for Satisfactory Spin Recovery. NACA TN No. 1045, 1946.

2. Zimmerman, C. H.: Preliminary Tests in the N.A.C.A. Free-Spinning Wind Tunnel. NACA Rep. No. 557, 1936.

3. Seidman, Oscar, and Kamm, Robert W.: Antispin-Tail-Parachute Installations. NACA RB, Feb. 1943.

4. Seidman, Oscar, and Neihouse, A. I.: Comparison of Free-Spinning Wind-Tunnel Results with Corresponding Full-Scale Spin Results. NACA MR, Dec. 7, 1938.

5. Neihouse, A. I.: A Mass-Distribution Criterion for Predicting the Effect of Control Manipulation on the Recovery from a Spin. NACA ARR, Aug. 1942.

6. Scher, Stanley H., and Hilton, Geraldine F.: Free-Spinning-Tunnel Tests of a $\frac{1}{18}$-Scale Model of the Grumman XF8F-1 Airplane. TED No. NACA 2342. NACA MR No. L5L05, Bur. Aero., 1946.

## SUPPLEMENTARY REFERENCES

1. Grumman Aircraft Eng. Corporation Drawing Nos.:

SP2220D General Arrangement, Single Engine - Torpedo Scout Bomber
SP3175A Front View, 1/24 Size Spin Tunnel Model
SP3176A Profile View, 1/24 Size Spin Tunnel Model
SP3177A Plan View, 1/24 Size Spin Tunnel Model
SP-1819 External Stores Locations and Dim., 1/24 Spin Tunnel Model

2. DeBoer, John C., and Rathke, C. W.: Weight Distribution, Moment of Inertia, and Unit Inertia Loads. Rep. No. 2801, Grumman Aircraft Eng. Corp., March 26, 1945.

TABLE I.- DIMENSIONAL CHARACTERISTICS OF THE GRUMMAN XTB3F-1

| | |
|---|---|
| Length over all, ft | 42.77 |
| Normal weight, lb | 19,189 |
| Normal center-of-gravity location, percent M.A.C. | 23.9 |
| Wing: | |
| Span, ft | 60.0 |
| Area, sq ft | 548.7 |
| Section | |
| (a) Station 28 (modified T.E.) | NACA 23018 |
| (b) Station 361.375 (modified T.E.) | NACA 23012 |
| Incidence: | |
| Root, deg | 2 |
| Tip, deg | 2 |
| Dihedral, deg | 5 |
| Aspect ratio | 6.56 |
| Mean aerodynamic chord, in. | 115.07 |
| Ailerons: | |
| Area, sq ft | 33.4 |
| Span, percent b/2 | 35 |
| Hinge line to trailing edge, in. | 20 |
| Horizontal tail surfaces: | |
| Total area, sq ft | 136.84 |
| Span, ft | 24.17 |
| Elevator area aft of hinge line, sq ft | 41.84 |
| Distance from normal center of gravity to elevator hinge line, ft | 23.81 |
| Incidence, deg | 2 |
| Vertical tail surfaces: | |
| Total area, sq ft | 45.31 |
| Total rudder area aft of hinge line, sq ft | 13.73 |
| Distance from normal center of gravity to rudder hinge line, ft | 24.56 |
| Tail-damping power factor | $225 \times 10^{-6}$ |

NATIONAL ADVISORY
COMMITTEE FOR AERONAUTICS

[redacted]

TABLE II.- CONDITIONS TESTED ON THE $\frac{1}{24}$-SCALE MODEL OF THE GRUMMAN XTB3F-1 AIRPLANE

[Model loading points 1 and 2 on table IV and figure 4]

| Direction of spin | Type of spin | Method employed in recovery attempt | Data presented on | | Loading |
|---|---|---|---|---|---|
| | | | Chart | Table | |
| Right | Erect | Rudder reversal | 1 | | Normal |
| Left | Erect | Rudder reversal | | | Normal |
| Right | Erect | Simultaneous rudder and elevator reversal | 1 | | Normal |
| Right | Inverted | Rudder reversal | 1 | | Normal |
| Right | Erect | Rudder reversal followed by elevator movement down | 2 | IV | Normal |
| Right | Erect | Rudder reversal followed by elevator movement down | | IV | Mass extended along fuselage ($I_Y$ and $I_Z$ increased approximately 10 percent of $I_Y$) |
| Right | Erect | Elevator movement down followed by rudder reversal | | IV | Normal |
| Right | Erect | Elevator movement down followed by rudder reversal | | IV | Mass extended along fuselage ($I_Y$ and $I_Z$ increased approximately 10 percent of $I_Y$) |
| Right | Erect | Tail parachute | | V | Normal |
| Right | Erect | Wing-tip parachute | | V | Normal |

NATIONAL ADVISORY
COMMITTEE FOR AERONAUTICS

[redacted]

TABLE III.- MASS CHARACTERISTICS AND INERTIA PARAMETERS FOR LOADING CONDITIONS POSSIBLE ON THE GRUMMAN XTB3F-1 AIRPLANE AND FOR THE LOADING TESTED ON THE $\frac{1}{24}$-SCALE MODEL

[Model values are presented in terms of full-scale values]

| No. (same as fig. 4) | Loading | Weight (lb) | $\mu$ | | Center-of-gravity location | | Moments of inertia about center of gravity | | | Mass parameters | | |
|---|---|---|---|---|---|---|---|---|---|---|---|---|
| | | | Sea level | 25,000 ft | $x/\bar{c}$ | $z/\bar{c}$ | $I_X$ (slug-ft$^2$) | $I_Y$ (slug-ft$^2$) | $I_Z$ (slug-ft$^2$) | $\frac{I_X - I_Y}{mb^2}$ | $\frac{I_Y - I_Z}{mb^2}$ | $\frac{I_Z - I_X}{mb^2}$ |
| Airplane values | | | | | | | | | | | | |
| 1 | Normal | 19,189 | 7.6 | 17.0 | 0.239 | -0.059 | 21,412 | 38,548 | 57,723 | $-80 \times 10^{-4}$ | $-90 \times 10^{-4}$ | $170 \times 10^{-4}$ |
| 2 | Torpedo overload | 21,200 | 8.4 | 18.8 | .239 | -.043 | 25,109 | 39,372 | 61,704 | -60 | -94 | 155 |
| 3 | Scout condition | 20,681 | 8.2 | 18.3 | .235 | -.047 | 25,832 | 39,220 | 62,223 | -58 | -100 | 157 |
| 4 | Four 500-lb bombs | 21,072 | 8.4 | 18.7 | .243 | -.042 | 33,102 | 39,468 | 69,679 | -27 | -128 | 155 |
| 5 | Most rearward center of gravity | 17,600 | 7.0 | 15.6 | .245 | -.035 | 19,912 | 38,911 | 55,179 | -97 | -83 | 179 |
| Model values | | | | | | | | | | | | |
| 1 | Normal | 19,280 | 7.7 | 17.1 | 0.245 | 0.014 | 22,645 | 39,842 | 58,957 | $-80 \times 10^{-4}$ | $-88 \times 10^{-4}$ | $168 \times 10^{-4}$ |
| 2 | Mass extended along fuselage ($I_Y$ and $I_Z$ increased approximately 10 percent of $I_Y$) | 21,375 | 8.5 | 18.9 | .239 | -.074 | 21,605 | 43,012 | 62,016 | -90 | -80 | 169 |

[redacted]

NATIONAL ADVISORY
COMMITTEE FOR AERONAUTICS

[redacted]

TABLE IV.- EFFECTS ON RECOVERY CHARACTERISTICS OF THE $\frac{1}{24}$-SCALE MODEL OF THE GRUMMAN XTB3F-1 AIRPLANE OF TIME LAG BETWEEN RUDDER AND ELEVATOR REVERSAL, OF SEQUENCE OF CONTROL MOVEMENTS, AND OF INCREASED WEIGHT ALONG FUSELAGE

[Unless otherwise indicated; recovery attempted by reversal of rudder to 2/3 against the spin and of the elevator to 1/3 down in the sequence indicated (turns for recovery measured from time first control moved); right erect spins]

| | Normal loading | | Mass increased along fuselage ($I_Y$ and $I_Z$ increased approximately 10 percent of $I_Y$) |
|---|---|---|---|
| | Ailerons 1/3 against, elevator 2/3 up | Ailerons neutral, elevator full up | Ailerons 1/3 against, elevator 2/3 up |
| Rudder reversal followed by elevator reversal | | | |
| Turns for recovery Time lag 1/4 turn | $\frac{1}{2}$ | | $\frac{1}{2}, \frac{1}{2}$ |
| Turns for recovery Time lag 1/2 turn | $\frac{3}{4}, \frac{3}{4}, \frac{3}{4}$ | | 1 |
| Turns for recovery Time lag 1 turn | | | $1\frac{3}{4}$ |
| Turns for recovery Time lag $1\frac{1}{4}$ turns | $1\frac{1}{2}$ | | |
| Elevator reversal followed by rudder reversal | | | |
| Turns for recovery Time lag 1/4 turn | $>2, 2\frac{1}{2}$ | [a]$\frac{3}{4}$, [a]1 | $\infty, \infty$ |
| Turns for recovery Time lag 1 turn | | [a]$>5$ | |
| Turns for recovery Time lag 2 turns | $5\frac{1}{4}, 5\frac{1}{4}$ | | |
| Turns for recovery Time lag [b]5 turns | [b]$\infty$ | [a]$>7$ [ab]$>10$ | |

[a]Recovery attempted by moving elevator to full down and the rudder to full against the spin.
[b]Visual estimate.

[redacted]

NATIONAL ADVISORY
COMMITTEE FOR AERONAUTICS

[redacted]

TABLE V.- SPIN-RECOVERY-PARACHUTE DATA OBTAINED WITH THE $\frac{1}{24}$-SCALE MODEL OF THE GRUMMAN XF3F-1 AIRPLANE

[Loading point 1 on table IV and figure 4; rudder fixed full with the spin unless otherwise indicated; model values converted to corresponding full-scale values; $C_D$ of parachutes 0.65; right erect spins]

| Parachute diameter (ft) | Towline length (ft) | Ailerons | Elevator | Vertical rate of descent (fps) | Turns for recovery |
|---|---|---|---|---|---|
| Tail parachutes | | | | | |
| 12 | 30 | Neutral | Up | Approximately 336 | $>3\frac{1}{2}$, $>5$, $>6\frac{1}{4}$ |
| 14 | 30 | Neutral | Up | Approximately 336 | $\frac{1}{2}$, $4\frac{3}{4}$, $>9$, [a]$\frac{1}{2}$ [a]2, [a]$>3$ |
| 15 | 30 | Neutral | Up | Approximately 336 | $1\frac{1}{2}$, $2\frac{3}{4}$, 3, [a]$\frac{1}{2}$, [a]$\frac{3}{4}$, [a]$1\frac{1}{4}$ |
| 15 | 30 | Against | Neutral | 237 | [a]1, [a]1, [a]$1\frac{1}{4}$ |
| 16 | 30 | Neutral | Up | Approximately 336 | $\frac{3}{4}$, 1, $1\frac{1}{4}$ |
| Wing-tip parachutes | | | | | |
| 6 | 13 | Neutral | Up | $>336$ | $1\frac{1}{2}$, $>1\frac{3}{4}$, $>2\frac{1}{4}$ |
| 8 | 10 | Neutral | Up | $>336$ | $\frac{1}{2}$, $\frac{1}{2}$, $\frac{1}{2}$ |
| 10 | 8 | Neutral | Up | $>336$ | $\frac{1}{4}$, $\frac{1}{2}$, $\frac{1}{4}$ |

[a]Recovery attempted by simultaneous opening of parachute and full rudder reversal.

[redacted]

NATIONAL ADVISORY
COMMITTEE FOR AERONAUTICS

CHART 1.- SPIN AND RECOVERY CHARACTERISTICS OF A $\frac{1}{24}$-SCALE MODEL OF THE GRUMMAN XTB3F-1 AIRPLANE IN THE NORMAL LOADING

[Loading point 1 on table III and figure 4; flaps neutral; cockpit closed; landing gear retracted; recovery attempted by rapid full rudder reversal except as noted (recovery attempted from, and steady-spin data presented for, rudder-full-with spins); erect spins]

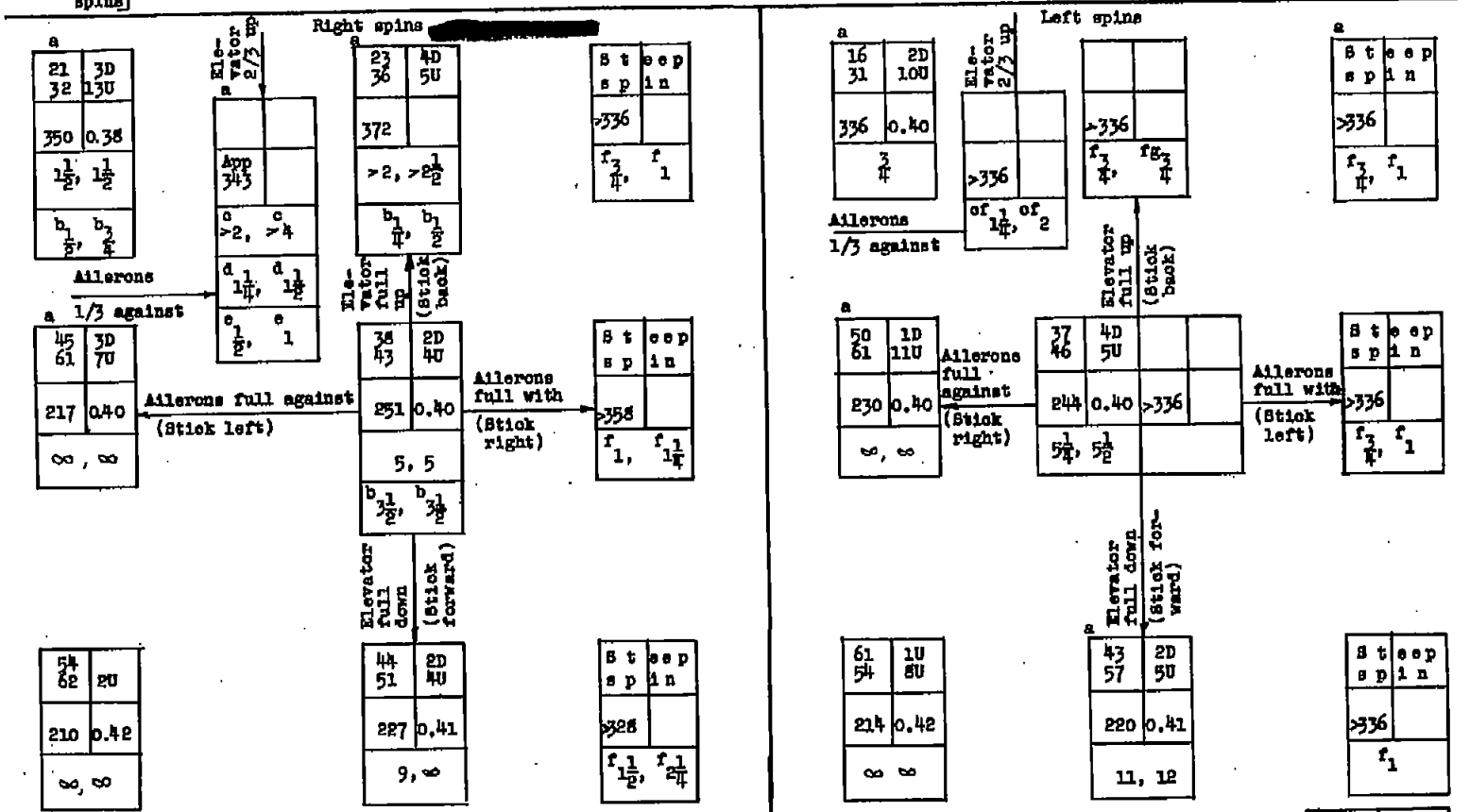


[a]Oscillatory spin.
[b]Recovery attempted by simultaneous full reversal of rudder and movement of the elevator to full down.
[c]Recovery attempted by reversing rudder from full with the spin to 2/3 against the spin.
[d]Recovery attempted by simultaneous reversal of the rudder from full with to 2/3 against the spin and movement of the elevator from 2/3 up to neutral.
[e]Recovery attempted by simultaneously reversing the rudder from full with the spin to 2/3 against the spin and the elevator from 2/3 up to 1/3 down.
[f]Recovery attempted before model reached its final steeper attitude.
[g]Visual estimate.

NATIONAL ADVISORY COMMITTEE FOR AERONAUTICS

CHART 2.- INVERTED SPIN AND RECOVERY CHARACTERISTICS OF A $\frac{1}{24}$-SCALE MODEL OF THE GRUMMAN XTB3F-1 AIRPLANE IN THE NORMAL LOADING

[Loading point 1 on table III and figure 4; flaps neutral; cockpit closed; landing gear retracted; recovery attempted by rapid full rudder reversal (recovery attempted from, and steady-spin data presented for, rudder-full-with spins); spins to pilot's right]

[redacted]

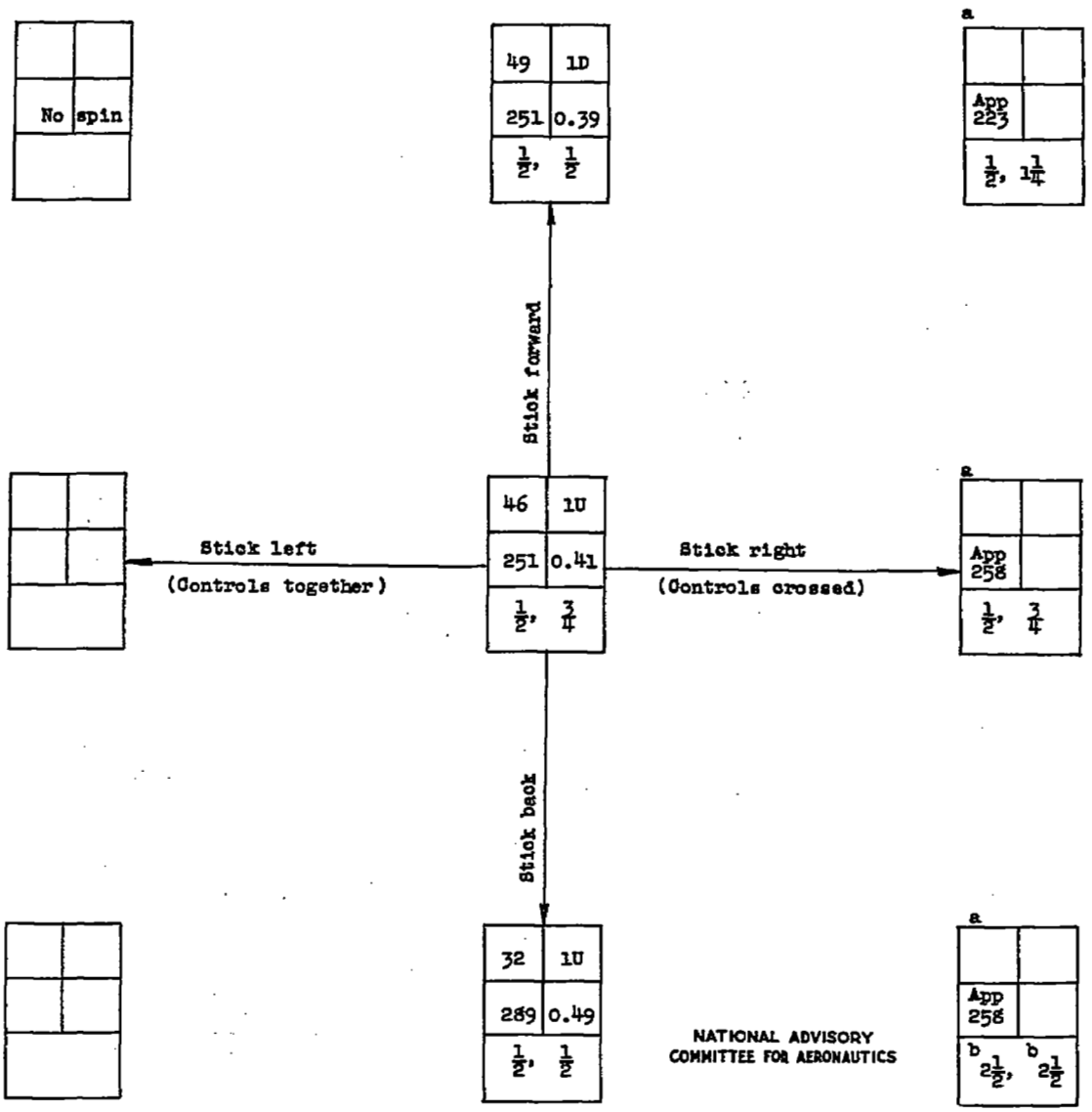


[a]Violent oscillatory and whipping spin.
[b]Recovery attempted before model reached its final steeper attitude.

[redacted]

Model values converted to corresponding full-scale values.
U inner wing up
D inner wing down

| | |
|---|---|
| α (deg) | φ (deg) |
| V (fps) | Ω (rps) |
| Turns for recovery | |

[redacted]

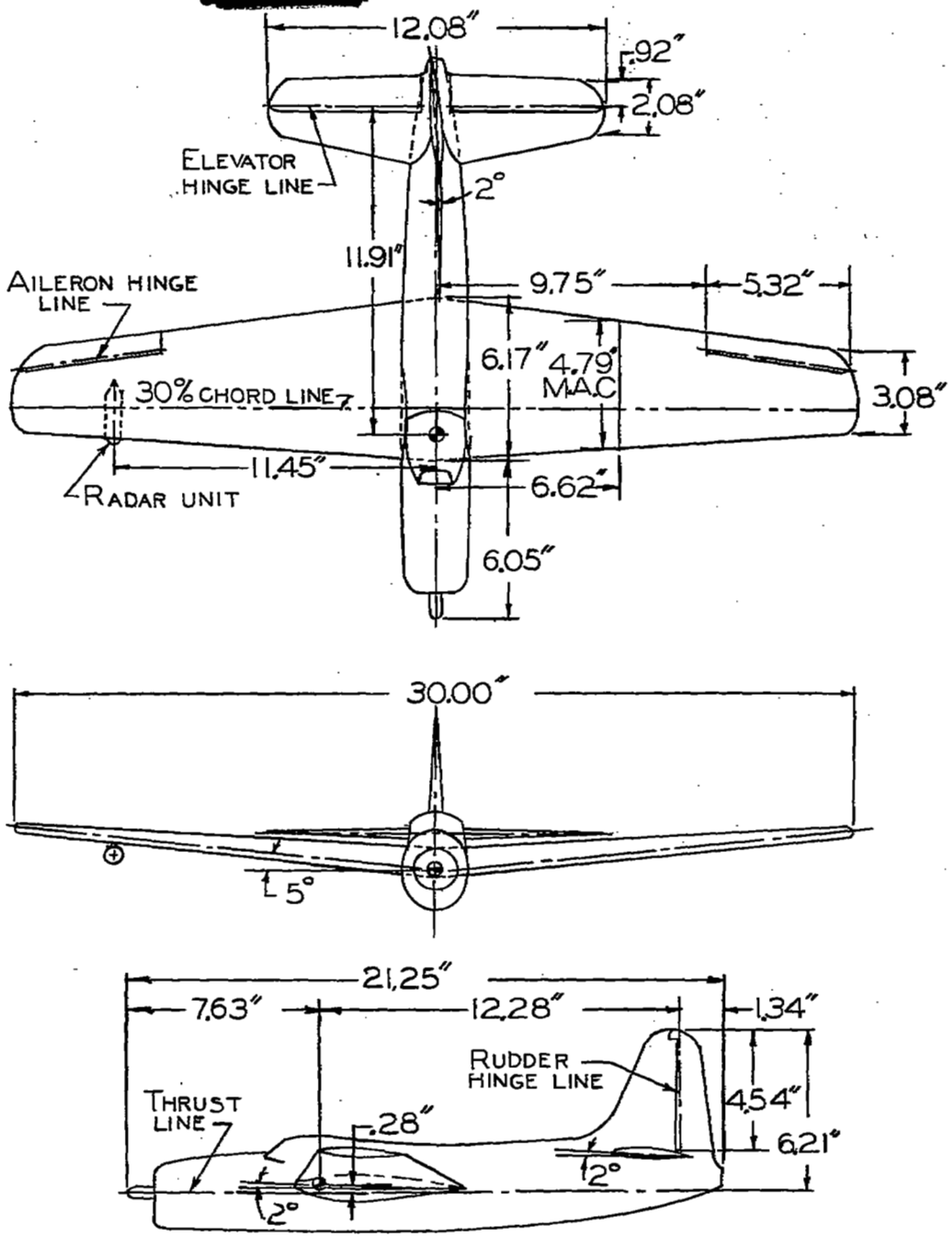


FIGURE 1.- THREE-VIEW DRAWING OF THE $\frac{1}{24}$-SCALE MODEL OF THE GRUMMAN XTB3F-1 AIRPLANE AS TESTED IN THE FREE-SPINNING TUNNEL. CENTER-OF-GRAVITY LOCATION IS SHOWN FOR NORMAL LOADING.

NATIONAL ADVISORY COMMITTEE FOR AERONAUTICS

[redacted]

[redacted]

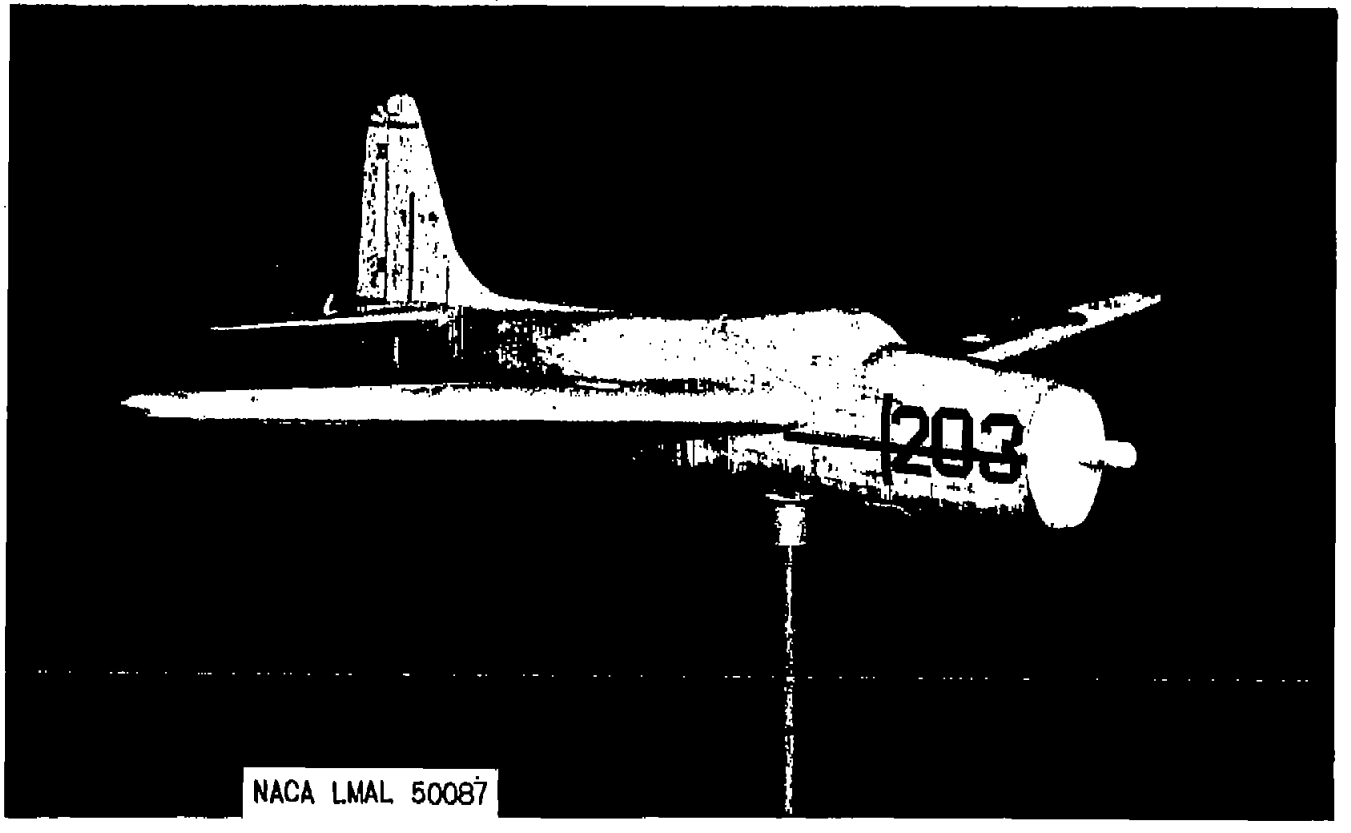


Figure 2.- Photograph of the $\frac{1}{24}$-scale model of the Grumman XTB3F-1 airplane in normal loading, clear condition.

[redacted]

NATIONAL ADVISORY COMMITTEE FOR AERONAUTICS
LANGLEY MEMORIAL AERONAUTICAL LABORATORY - LANGLEY FIELD, VA.

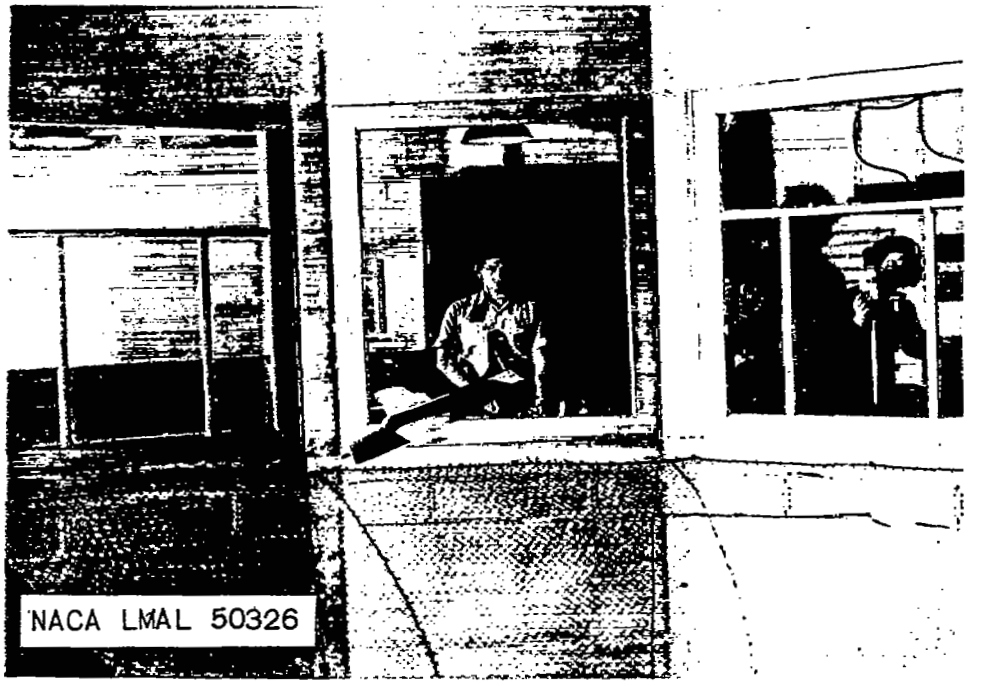


Figure 3.- Photograph of the $\frac{1}{24}$ - scale model of the Grumman XTB3F-1 airplane spinning in the Langley 20-foot free-spinning tunnel.

[redacted]

NATIONAL ADVISORY COMMITTEE FOR AERONAUTICS
LANGLEY MEMORIAL AERONAUTICAL LABORATORY - LANGLEY FIELD, VA.

[redacted]

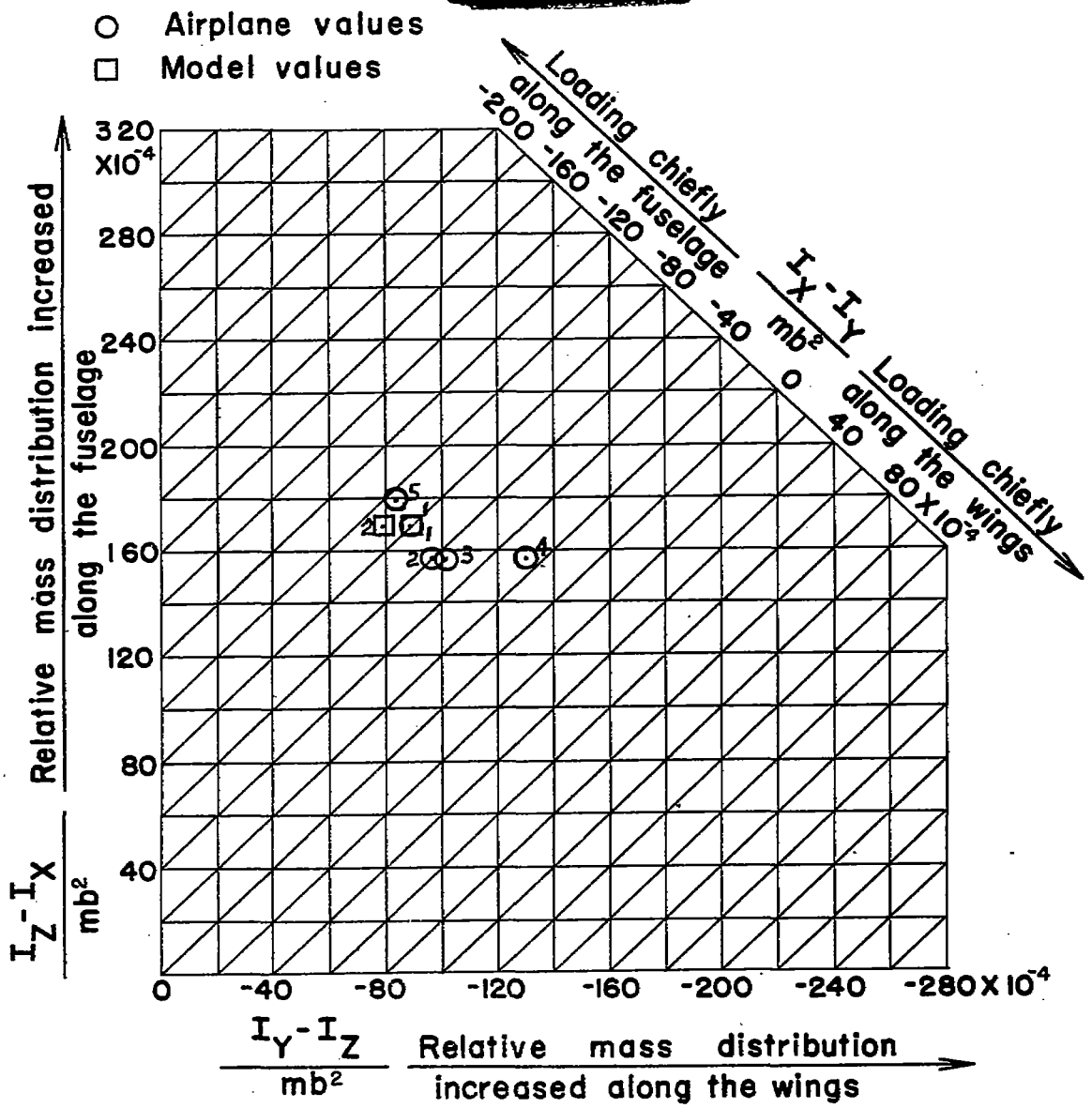


[redacted]

Figure 4.- Mass parameters for loadings possible on the Grumman XTB3F-1 airplane and for the loading tested on the 1/24-scale model. (Points are for loadings listed in table III)

NATIONAL ADVISORY COMMITTEE FOR AERONAUTICS

NASA Technical Library
3 1176 01437 5092