Copy No. 122

RM No. L7F19

[redacted]

[redacted]

TECH LIBRARY KAFB, NM
0143648

RML7F19

7101

NACA

RESEARCH MEMORANDUM

PRELIMINARY INVESTIGATION OF SPOILER LATERAL CONTROL ON A 42° SWEPTBACK WING AT TRANSONIC SPEEDS

By

Leslie E. Schneiter and Howard L. Ziff

Langley Memorial Aeronautical Laboratory
Langley Field, Va.

CLASSIFIED DOCUMENT

[redacted]

NATIONAL ADVISORY COMMITTEE FOR AERONAUTICS

WASHINGTON
August 12, 1947

[redacted]

3/19 98/13

Classification cancelled (or changed to Unclassified

By Authority of NASA Tech. Pub. Announcement
(OFFICER AUTHORIZED TO CHANGE) 57 29 Jan 64

By .....

NIS
GRADE OF OFFICER MAKING CHANGE)

11 Apr 64
DATE

TECH LIBRARY KAFB, NM
0143948

NATIONAL ADVISORY COMMITTEE FOR AERONAUTICS

RESEARCH MEMORANDUM

PRELIMINARY INVESTIGATION OF SPOILER LATERAL CONTROL ON A 42° SWEPTBACK WING AT TRANSONIC SPEEDS

By Leslie E. Schneiter and Howard L. Ziff

SUMMARY

An investigation at transonic speeds has been performed in the Langley high-speed 7- by 10-foot tunnel to determine the rolling-effectiveness characteristics of a spoiler on a double-wedge-type semispan wing having a sweepback angle at the leading edge of 42°. The tests were performed by a method similar to the NACA wing-flow method of testing which involves placing a small model in the high-velocity-flow field generated over a curved surface. The spoiler configuration tested was developed in a low-speed, large-scale investigation on a wing of similar plan form but having a different airfoil section.

The results indicate that above a Mach number of 0.6, the effectiveness of the spoiler in producing rolling moment at an angle of attack of 3° increased as a Mach number of 0.90 was approached. At Mach numbers greater than 0.90, the spoiler effectiveness decreased rapidly until a Mach number of 1.05 was attained, above which point the effectiveness increased slightly as speed was further increased. At no time did the spoiler effectiveness drop to less than 79 percent of the value at Mach numbers between 0.50 and 0.60.

INTRODUCTION

One of the many problems arising from the use of sweptback wings on high-speed aircraft has been securing adequate lateral control, particularly in the transonic speed range. In order to obtain solutions to this problem, the NACA is currently investigating various lateral-control devices at transonic speeds.

One type of control that appears to offer some advantages is spoiler lateral control. Possible advantages of this type of control are the reduction of wing twisting moment and of control operating forces, the favorable yawing moments associated with spoilers, and

the fact that, because of the location of the spoilers, the trailing edge of the wing is available for full-span high-lift flaps.

The present investigation has been made to study the behavior of a spoiler configuration on a 42° sweptback wing in the transonic speed range. This particular spoiler configuration was developed at low speeds on a wing of similar plan form. The results of the transonic speed spoiler tests are presented herein for a Mach number range from approximately 0.50 to 1.25 at 3° angle of attack, and for a small angle-of-attack range at a constant Mach number of 0.98. The testing technique involved the use of a small model mounted on a transonic bump which was attached to the floor of the Langley high-speed 7- by 10-foot tunnel.[1]

SYMBOLS AND CORRECTIONS

C_l rolling-moment coefficient (L'/qSb)

$\bar{c}$ wing mean aerodynamic chord (M.A.C.), 0.207 foot $\left(\frac{2}{S}\int_0^{b/2} c^2\,dy\right)$

c local chord, feet, measured parallel to plane of symmetry of model

b twice span of semispan model, 0.814 foot, measured perpendicular to plane of symmetry of model

S twice area of semispan model, 0.165 square foot

L' model rolling moment, foot-pounds, about plane of symmetry

q average dynamic pressure for air stream over model, pounds per square foot $\left(\frac{1}{b}\int_0^{b/2} \rho V_l^2\,dy\right)$

ρ mass density of air, slugs per cubic foot

α angle of attack with respect to chord plane at root of model, degrees

M test Mach number $\left(\frac{2}{b}\int_0^{b/2} M_l\,dy\right)$

---

[1]The technique used is similar to that reported as being developed by the Lockheed Aircraft Company and the staff of the Southern California Cooperative Tunnel. (See article "Lockheed 'Bump' New Research Aid" Aviation News, vol. 7, no. 16, April 21, 1947, p. 10.)

[redacted]

V_l local air-stream velocity, feet per second

M_l local air-stream Mach number

H free-stream total head, pounds per square foot

H_l local total head, pounds per square foot

R Reynolds number

y spanwise distance from plane of symmetry measured on a line perpendicular to plane of symmetry of model, feet

No corrections have been applied to the data and the data presented include the forces on the root cover plate.

TESTING TECHNIQUE

The tests were performed in the Langley high-speed 7- by 10-foot tunnel which is a closed-throat, single-return tunnel capable of reaching choking Mach number. In order to obtain transonic speeds in the tunnel, an application of the NACA wing-flow method of testing (reference 1) was made. This method of testing at transonic speeds involves placing a small model in the high-velocity-flow field generated over a curved surface. The research work on the development of the transonic bump configuration reported herein covered a period from late October 1946 to April 1947. The spoiler tests were performed at the close of this period. For this investigation, a transonic bump with 40-inch span and 40-inch chord having the upper half of an NACA 16-040 airfoil section was mounted on the floor of the tunnel at an angle of attack of 2°. A sketch showing the relative location of the bump, model, and balance center line is shown in figure 1. An electrical strain-gage balance system was mounted in the bump to measure the rolling moments on the model. The chamber containing the balance system was sealed except for a small opening around the base of the model.

Provisions were made for changing the angle of attack of the model while the tunnel was running. The angle of attack was measured with a calibrated potentiometer and a galvanometer.

Preliminary pressure distributions over the surface of the clear bump were made using orifices placed chordwise along the center of the bump and spanwise along the line of maximum thickness of the bump. The location for the model test section was chosen at the chordwise region having the most nearly constant Mach number as determined from these surveys. Vertical total-pressure and static-pressure surveys were then made, again with the clear bump at the bump chordwise region decided upon as the location for the model. The Mach number

[redacted]

distributions determined from the vertical and chordwise surveys are presented in figure 2. The vertical distribution of dynamic pressure was approximately the same as the vertical distribution of Mach number. It will be noted from the curves of chordwise variation of Mach number that this variation is small up to a test Mach number of 0.87. Above this Mach number the variation of Mach number with chordwise location becomes erratic. The calculation of the Mach numbers for the distribution above the bump was based on the total head at the point in question, whereas the chordwise distribution of Mach number (along the surface of the bump) was based on the total head at a point just above the bump boundary layer. The effective Mach number for the tests was taken as the average over the span of the model. This Mach number was correlated with the index of tunnel speed $\frac{P_a - P}{P_a}$, where P_a is atmospheric pressure and P is the static pressure on the tunnel wall ahead of the bump.

Figure 3 presents the variation in total pressure with height above the bump for a Mach number of 1.24. The nearly constant Mach number portion of the vertical Mach number distribution curves is within the tunnel-wall boundary layer as may be seen from a comparison of figures 2 and 3. With the particular bump-tunnel combination, the tunnel boundary layer flows over the bump and has the effect of reducing the vertical variation in Mach number distribution normally associated with flow over a curved surface.

It is realized that there are numerous factors affecting the accuracy of the data. The effects of such factors as the spanwise and chordwise variation in Mach number and dynamic pressure over the surface of the model and the effect of the field of flow of the model on the calibrated Mach numbers and dynamic pressures (obtained without the model) are as yet undetermined, but it is felt that the effects of these factors in this method of testing are of the same order as these similar factors inherent in the NACA wing-flow method.

MODEL

The semispan wing model used for these tests was made of $\frac{1}{8}$-inch steel plate to the dimensions shown in figure 4. The airfoil section was of the double-wedge type, having a round nose and a sharp trailing edge. The leading- and trailing-edge angles were kept constant throughout the span. No twist or dihedral was incorporated in the model. The aspect ratio was 4.0, the taper ratio was 0.63, and the sweepback angle, relative to the leading edge, was 42°. The wing surface was polished and kept so during the tests. A $\frac{1}{32}$-inch brass end plate, 4.03 inches

in diameter, was soldered to the wing at the root chord to cover the clearance hole between the balance and the surface of the bump. The end plate was bent to conform to the contour of the bump at the model and was attached to the model in such a manner as to afford a constant clearance of 1/16 inch between the lower surface of the end plate and the upper surface of the bump. The plate prevented any flow to and from the balance chamber in the immediate vicinity of the root of the model. The spoilers, cut and bent from $\frac{1}{32}$-inch sheet brass, had a projection of 5 percent of the local wing chord and were soldered in place as shown in figure 4.

TESTS

Rolling moment was measured for the plain wing and for the wing with spoilers through a Mach number range from 0.52 to 1.25 at a constant angle of attack of 3°, and also through an angle-of-attack range from -2° to 3° at a constant Mach number of 0.98. The variation of Reynolds number with Mach number for these tests is shown in figure 5.

RESULTS AND DISCUSSION

The variation of rolling-moment coefficient produced by the spoiler, with Mach number is presented in figure 6 for an angle of attack of 3°. The results show that above a Mach number of about 0.6, the effectiveness of the spoiler in producing rolling moment increased as a Mach number of 0.90 was approached.

At Mach numbers greater than 0.90, the spoiler effectiveness decreased rapidly until a Mach number of 1.05 was attained, at which point the effectiveness increased slightly as speed increased. At no time did the rolling effectiveness drop to less than 79 percent of the value at Mach numbers between 0.50 and 0.60.

One test point is presented at a Mach number of 0.18 for comparative purposes. This point was obtained from a low-speed, large-scale investigation in which the spoiler configuration used in the present investigation was developed. The wing used in the low-speed investigation had similar plan-form characteristics but had an NACA 64_1-112 airfoil section (measured perpendicular to the unswept quarter-chord line) as compared with the double-wedge-type section used in the tests at transonic speed.

The variation of rolling-moment coefficient with angle of attack at a constant Mach number of 0.98 for the high-speed tests and 0.18 for

the low-speed, large-scale tests is presented in figure 7. For the high-speed tests, the effectiveness of the spoiler in producing rolling moment increased rapidly with increasing angle of attack from -2° to 2°. Increasing the angle of attack to 3° resulted in a large drop in spoiler effectiveness. The low-speed effectiveness of the spoiler remained fairly constant, however, for the same angle-of-attack range.

It should be noted that the variations in rolling effectiveness herein discussed are for a spoiler of 5-percent projection only. The results of the low-speed investigation indicate that the effectiveness of the spoiler will be very low or may reverse at small projections, especially at high angles of attack. The results presented herein would, therefore, be directly applicable to an intermittent control system such as might be used on a missile. Additional research will be necessary to determine the high-speed variation of effectiveness with projection to make the results applicable to the proportional control system normally used in man-carrying aircraft.

CONCLUDING REMARKS

The results of small-scale spoiler effectiveness tests on a 42° sweptback, double-wedge-type semispan wing at transonic speeds show that above a Mach number of 0.6 the effectiveness of the spoiler in producing rolling moment at an angle of attack of 3° increased to a Mach number of 0.90. At Mach numbers greater than 0.90, the spoiler effectiveness decreased rapidly until a Mach number of 1.05 was attained, above which point the effectiveness increased slightly as speed was further increased. At no time did the rolling effectiveness drop to less than 79 percent of the value at Mach numbers between 0.50 and 0.60.

Langley Memorial Aeronautical Laboratory
National Advisory Committee for Aeronautics
Langley Field, Va.

REFERENCE

1. Gilruth, R. R., and Wetmore, J. W.: Preliminary Tests of Several Airfoil Models in the Transonic Speed Range. NACA ACR No. L5E08, 1945.

[redacted]

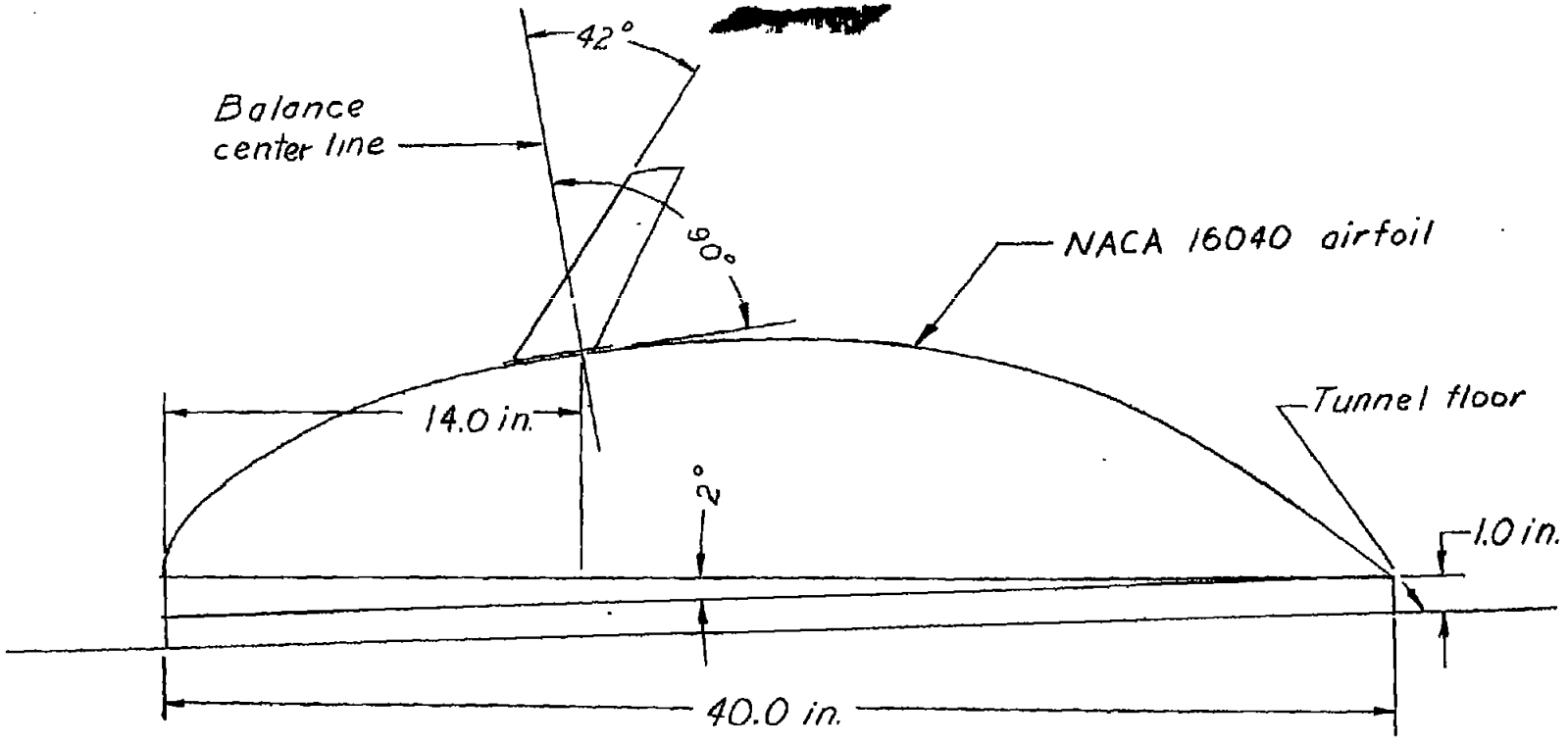

Figure 1.- Schematic sket[redacted]lative position of model, balance and transonic bump as mounted in the Langley high-speed 7-by10-foot tunnel.

[redacted]

NATIONAL ADVISORY
COMMITTEE FOR AERONAUTICS

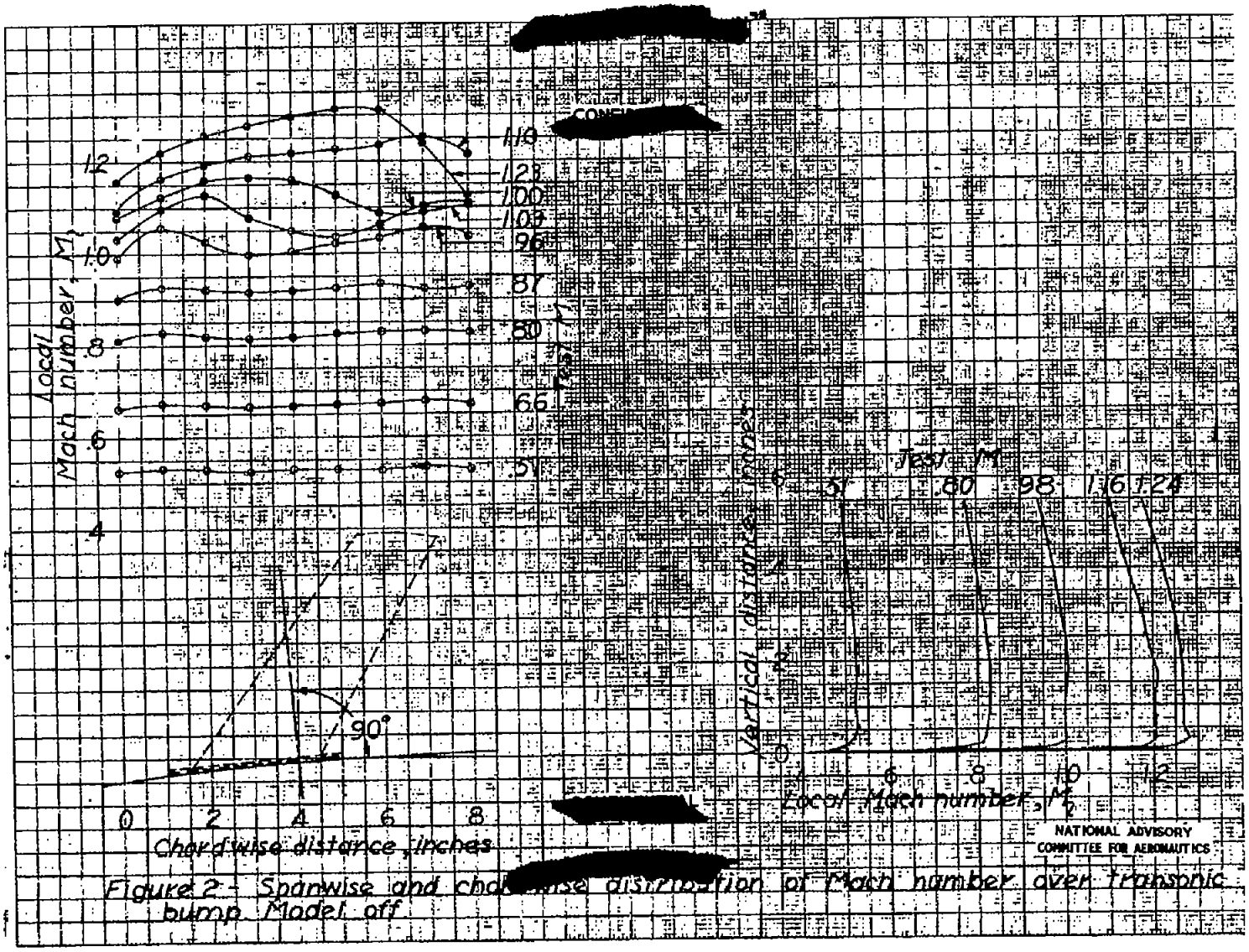

Figure 2.- Spanwise and chordwise distribution of Mach number over transonic bump. Model off.

[redacted]

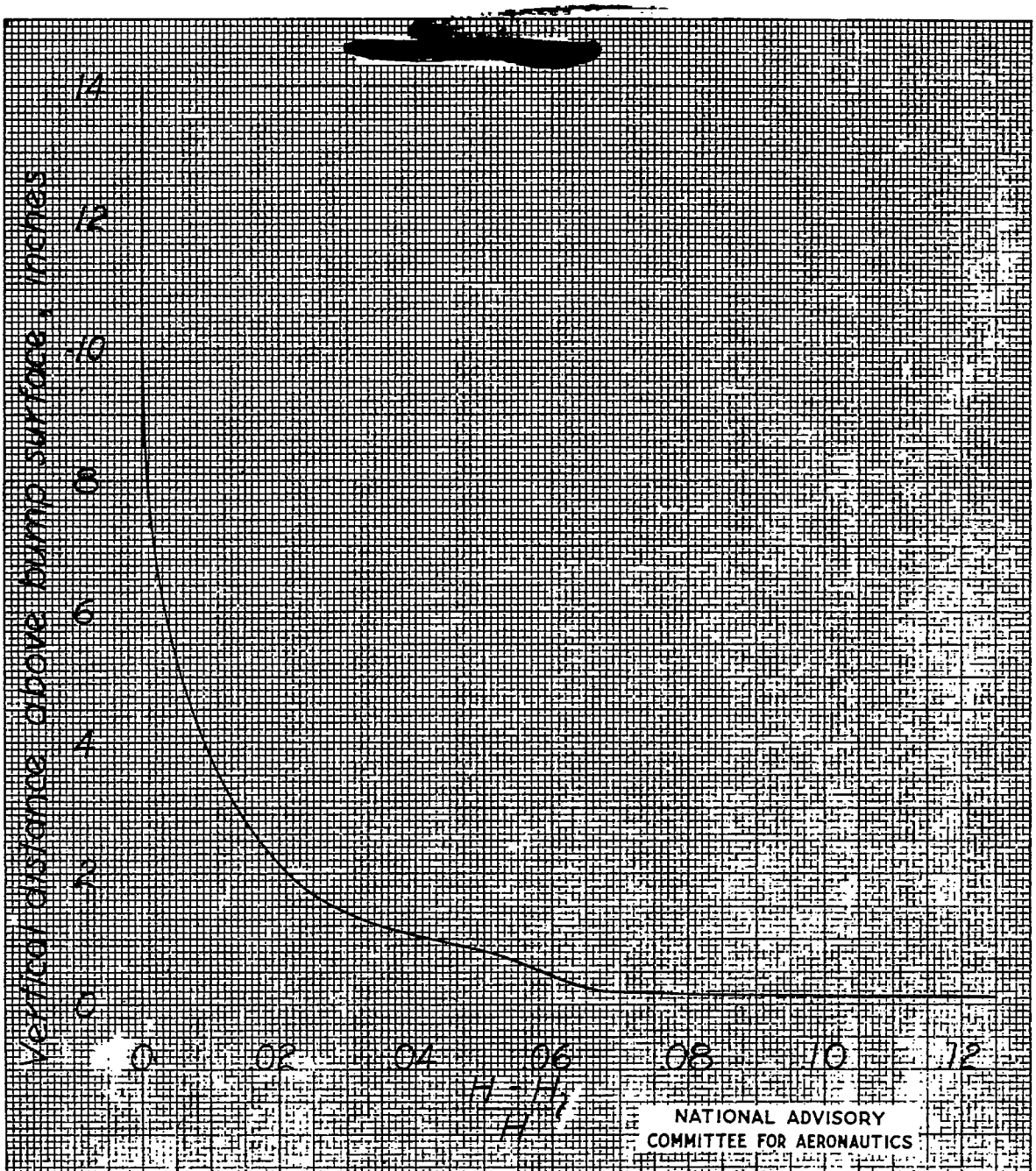

NATIONAL ADVISORY COMMITTEE FOR AERONAUTICS

Figure 3 - Vertical variation of total head factor above transonic bump at model mounting position. Mach number = 1.24. Model off.

[redacted]

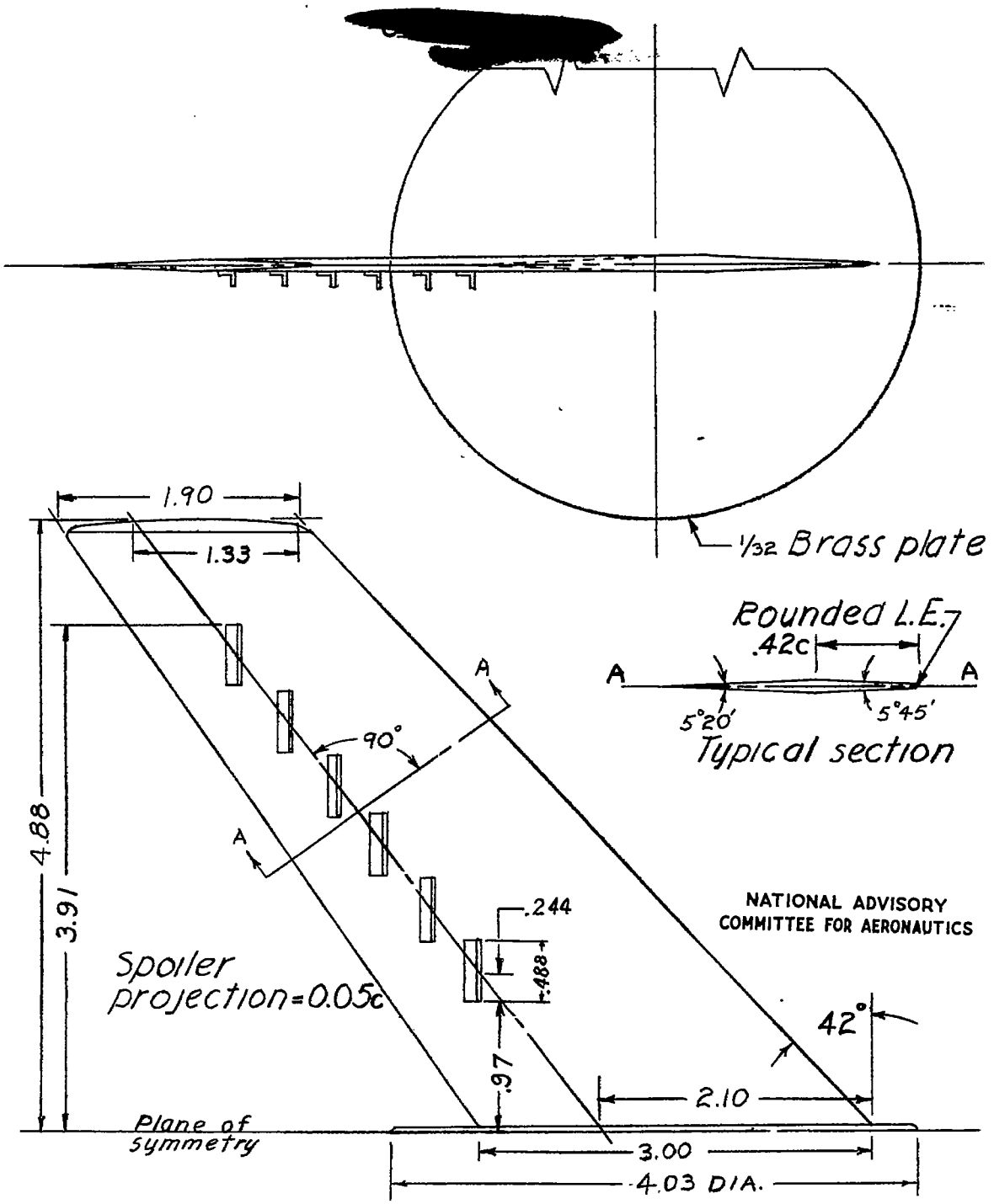

[redacted]

Figure 4.- Drawing of [redacted] swept-back wing. S=0.165 sq.ft.; aspect ratio=4.0; taper ratio=0.63. All dimensions in inches unless otherwise indicated. Maximum thickness=1/8.

[redacted]

[redacted]

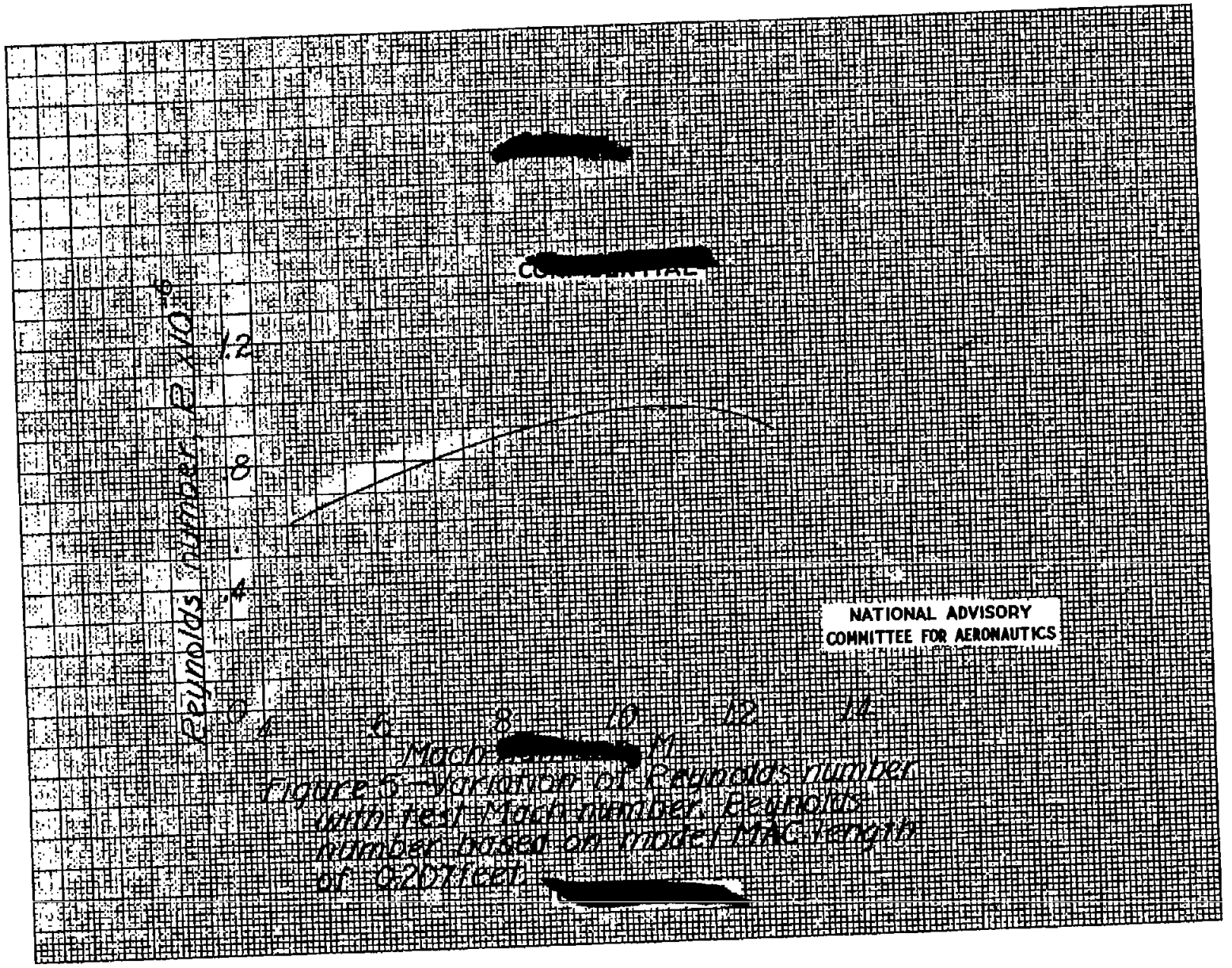

Figure 5.—Variation of Reynolds number with test Mach number. Reynolds number based on model MAC length of 0.207 feet. [redacted]

[redacted]

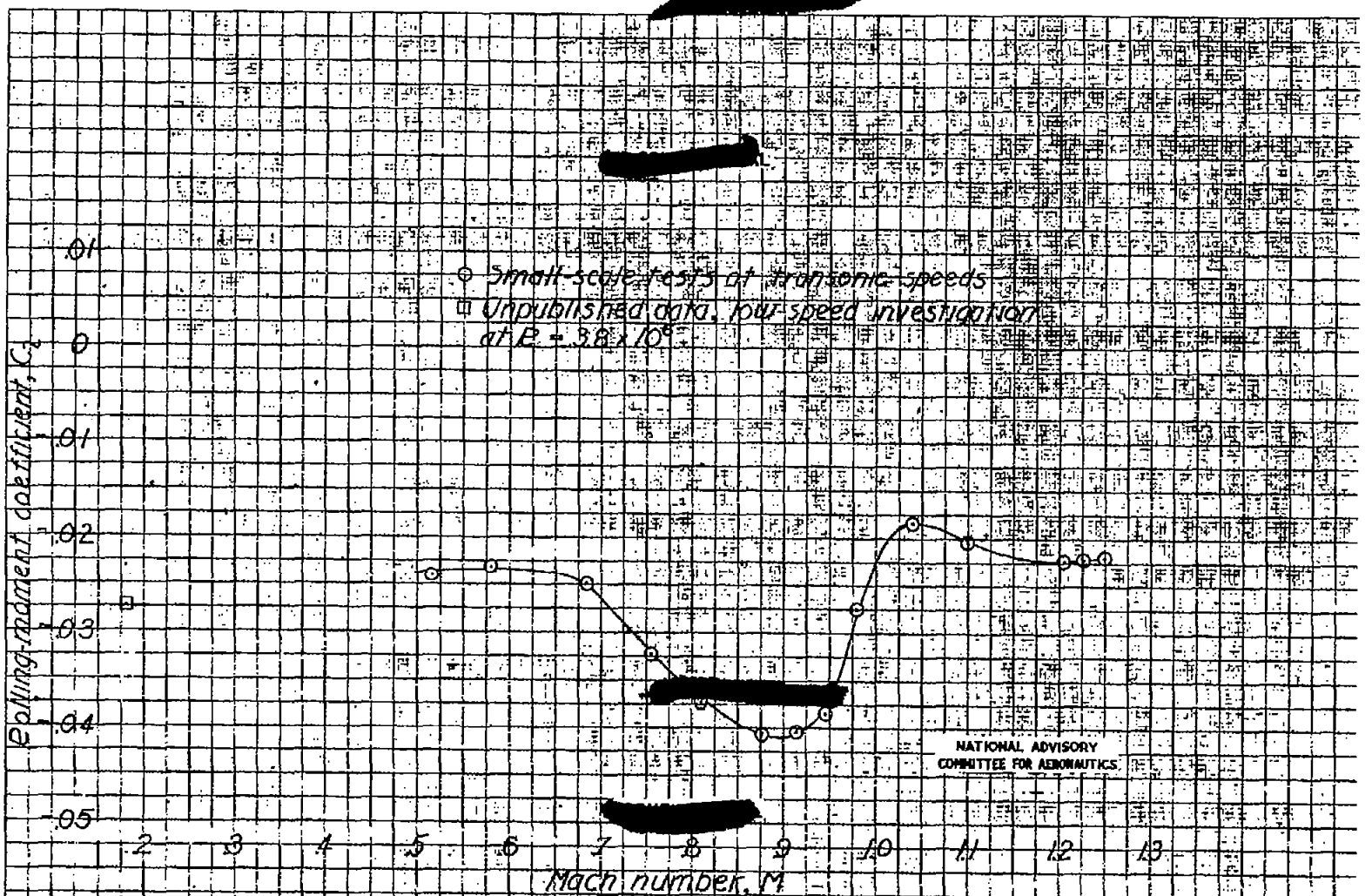

[redacted]

Figure 6.- Variation of rolling-moment coefficient, produced by spoiler, with Mach number. Angle of attack of 3°. 0.05c spoiler projection.

[redacted]

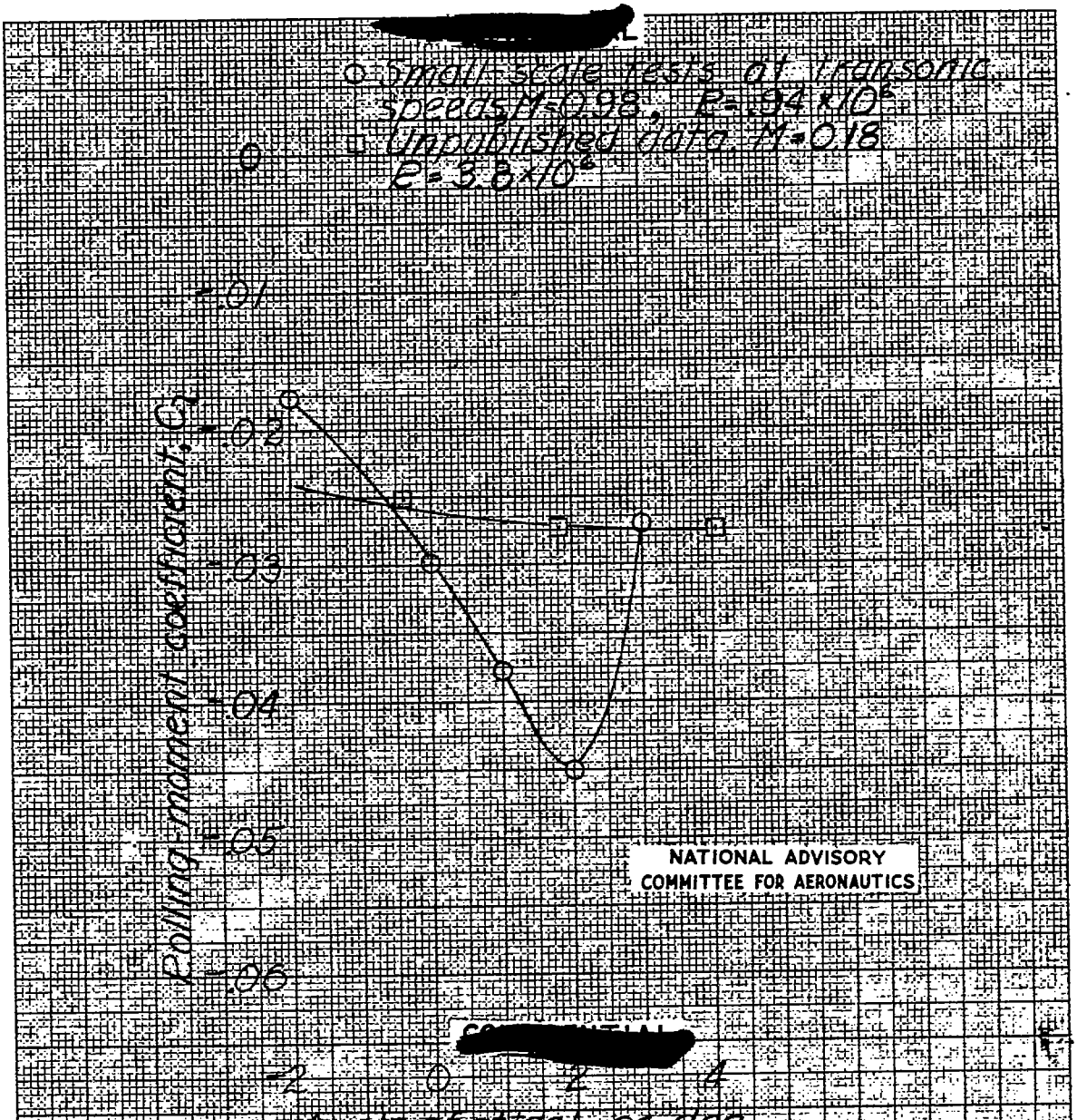

[redacted]

Figure 7.- Variation of rolling-moment coefficient with angle of attack. 0.05c spoiler projection.