SECURITY INFORMATION

CONFIDENTIAL

Copy 6
RM E52F20

NACA RM E52F20

# RESEARCH MEMORANDUM

## THRUST AUGMENTATION OF A TURBOJET ENGINE AT SIMULATED FLIGHT CONDITIONS BY INTRODUCTION OF A WATER-ALCOHOL MIXTURE INTO THE COMPRESSOR

By James W. Useller, Carmon M. Auble and Ray W. Harvey, Sr.

Lewis Flight Propulsion Laboratory
Cleveland, Ohio

CLASSIFICATION CHANGED

To UNCLASSIFIED UNAVAILABLE

By authority of Naca Res. Abs. + RN-113 Effective Date 3-19-57
NB 4-3-57

CLASSIFIED DOCUMENT

This material contains information affecting the National Defense of the United States within the meaning of the espionage laws, Title 18, U.S.C., Secs. 793 and 794, the transmission or revelation of which in any manner to an unauthorized person is prohibited by law.

NATIONAL ADVISORY COMMITTEE FOR AERONAUTICS

WASHINGTON

August 18, 1952

CONFIDENTIAL

UNAVAILABLE

NACA LIBRARY
LANGLEY AERONAUTICAL LABORATORY
Langley Field, Va.

NATIONAL ADVISORY COMMITTEE FOR AERONAUTICS

RESEARCH MEMORANDUM

# THRUST AUGMENTATION OF A TURBOJET ENGINE AT SIMULATED FLIGHT CONDITIONS BY INTRODUCTION OF A WATER-ALCOHOL MIXTURE INTO THE COMPRESSOR

2565

By James W. Useller, Carmon M. Auble, and Ray W. Harvey, Sr.*

## SUMMARY

An investigation was conducted at simulated high-altitude flight conditions to evaluate the use of compressor evaporative cooling as a means of turbojet-engine thrust augmentation. Comparison of the performance of the engine with water-alcohol injection at the compressor inlet, at the sixth stage of the compressor, and at the sixth and ninth stages was made. From consideration of the thrust increases achieved, the interstage injection of the coolant was considered more desirable for use in this engine than inlet injection; sixth-stage injection is preferred over the combined sixth- and ninth-stage injection because of its relative simplicity.

A maximum augmented net-thrust ratio of 1.106 and a maximum augmented jet-thrust ratio of 1.062 were obtained at an augmented liquid ratio of 2.98 and an engine-inlet temperature of 80° F. At lower inlet temperatures (-40° to 40° F), the maximum augmented net-thrust ratios ranged from 1.040 to 1.076 and the maximum augmented jet-thrust ratios ranged from 1.027 to 1.048, depending upon the inlet temperature. The relatively small increase in performance at the lower inlet-air temperatures can be partially attributed to the inadequate evaporation of the water-alcohol mixture, but the more significant limitation was believed to be caused by the negative influence of the liquid coolant on engine-component performance. In general, it is concluded that the effectiveness of the injection of a coolant into the compressor as a means of thrust augmentation is considerably influenced by the design characteristics of the components of the engine being used.

## INTRODUCTION

The demand of turbojet-engine-powered aircraft for additional thrust for take-off and transonic acceleration has led to the application of compressor coolant injection as a means of supplementing the thrust

*Mr. Harvey, of ARO Inc., is on assignment to the NACA Lewis Flight Propulsion Laboratory.

augmentation provided by afterburning alone (reference 1). In order to isolate the effect of coolant injection on the engine cycle without compounding the problem by the addition of afterburning, an investigation was conducted with coolant injection alone. The performance increases obtained at sea-level zero-ram conditions by means of compressor evaporative cooling in an axial-flow-type turbojet engine are reported in reference 2. These results indicate the desirability of an investigation to determine the effect of transonic flight conditions on this method of thrust augmentation.

2565

Evaporation of a liquid, both before and during the compression of the air entering the turbojet engine, results in cooling the air. This cooling effect produces an increase in compressor pressure ratio and mass flow with a resultant increase in engine thrust. Although it was recognized that the effectiveness of the water-alcohol mixture as a coolant would be reduced at the low temperatures encountered with the flight conditions under consideration, the magnitude of the influence of the reduced effectiveness on thrust augmentation was not known.

Accordingly, an investigation was conducted at simulated flight conditions in an NACA Lewis laboratory altitude test chamber to determine the augmentation available from the evaporation of a water-alcohol mixture during the compression of the engine air. Coolant-air ratios from 0.008 to 0.098 were investigated in an axial-flow-type turbojet engine operating at a simulated altitude of 35,000 feet and a flight Mach number of 1.0. The optimum station for the introduction of the coolant into the compression process was determined and is reported herein. Thrust-augmentation and required-liquid-consumption data are presented; in addition, the effects of the water-alcohol injection on the various engine-performance parameters are described. The effect of the variation of engine-inlet temperature on the thrust augmentation was also investigated at the flight conditions considered.

## APPARATUS

Engine. - This investigation was conducted on an axial-flow-type turbojet engine (fig. 1) with a sea-level static-thrust rating of 3000 pounds at a rotor speed of 12,500 rpm and a turbine-inlet temperature of 1370° F.

The engine components included an 11-stage axial-flow compressor, a compressor-discharge mixer, a double annular through-flow type combustor, a two-stage axial-flow turbine, and a variable-area exhaust nozzle. The compressor-discharge mixer was used to produce a more favorable compressor-discharge velocity gradient and, consequently, an improved average turbine-discharge radial-temperature distribution. The variable-area exhaust nozzle had an area range of 1.05 to 1.96 square

feet. Clearance indicators of NACA design were located at the seventh, eighth, ninth, and tenth compressor stages to indicate blade rubbing on the compressor casing. A sketch of the compressor with the clearance indicators installed is shown in figure 2; the design details of the clearance indicators are shown in an inset in figure 2.

2565

Installation. - The engine was installed in an altitude test chamber 10 feet in diameter and 60 feet long with air-straightening vanes upstream of the engine inlet, front and rear bulkheads, and an exhaust diffuser (fig. 3(a)). The engine was mounted on a movable thrust bed, which was connected to a null-type thrust cell with suitable linkages. The engine inlet extended through the front bulkhead but free axial engine movement was allowed by means of a labyrinth seal. The rear bulkhead was installed to prevent circulation of the hot exhaust gases around the engine. A photograph of the engine installed in the altitude chamber is shown in figure 3(b).

Injection systems. - In the various phases of this investigation, the water-alcohol mixture was introduced into the air stream at the engine inlet, at the sixth stage, and at the sixth and ninth stages of the compressor. The inlet injection system consisted of an airfoil-section manifold mounted in the inlet duct 30 inches upstream of the compressor with 20 atomizing nozzles in the trailing edge that sprayed downstream. Alternate nozzles were manifolded together in groups of 10 to allow each group to be operated by a separate throttle. Each nozzle had a flow capacity of 30 gallons per hour. Two manifolds were used at the sixth stage with 10 injection tubes in each. Each injection tube had a 0.033-inch-diameter orifice. The ninth-stage injection system also consisted of two manifolds with each of the 10 injection tubes in one manifold having a 0.020-inch-diameter orifice, and each of the 10 injection tubes in the other manifold having a 0.024-inch-diameter orifice.

The design of the interstage-injection tubes is described in detail in reference 1. A sketch of the compressor with injection tubes in position is shown in figure 2 and a detailed sketch of the injection-tube design is shown in an inset. The premixed coolant was delivered from the storage tank to the manifolds by means of a high-pressure pump. The flow was controlled by means of hand-operated throttle valves.

Instrumentation. - Temperatures and pressures were measured at several stations throughout the engine as designated in figure 1. Schematic diagrams showing the instrumentation locations at the various stations are shown in figure 4. Altitude-chamber static pressure was measured at station 0.

Fuel and water-alcohol flows were measured with calibrated rotameters; engine speed was measured with a Chrono-Tachometer; and air flow was calculated from pressures and temperatures measured by the survey rakes in the inlet duct at station 1.

Fuel and coolant mixtures. - The engine fuel used was clear, unleaded gasoline. The water-alcohol mixture used was 55 percent water from the domestic water supply and 45 percent alcohol by weight. The alcohol used was 95 percent ethyl and 5 percent methyl by weight. The mixture was prepared in 5000 gallon lots and held in storage tanks until used.

2565

## PROCEDURE

Engine conditions. - The performance of the engine with each of the three systems of coolant injection was investigated at an altitude of 35,000 feet and a flight Mach number of 1.0. The injection configuration which produced the best performance was then investigated for a range of inlet-air temperatures.

The water-alcohol mixture was injected into the air stream at the various stages and at inlet conditions as indicated in the following table:

| Injection station | Inlet temperature, (°F) | | | | |
|---|---|---|---|---|---|
| | 80 | 40 | [a]13 | -15 | -40 |
| | Water alcohol air ratios investigated | | | | |
| Engine inlet | ---------- | ---------- | 0 to 0.098 | ---------- | ---------- |
| Sixth stage | 0 to 0.036 | 0 to 0.036 | 0 to .036 | 0 to 0.036 | 0 to 0.036 |
| [b]Sixth and ninth stages | ---------- | ---------- | 0 to .036 | ---------- | ---------- |

[a]NACA standard temperature for Mach number of 1.0 and altitude of 35,000 ft.

[b]For combined sixth- and ninth-stage injection, both the ninth-stage manifolds were used simultaneously in conjunction with one manifold at the sixth stage. The coolant flow was equally divided between the two stages.

At each condition the engine was operated at its rated speed, 12,500 rpm. The average turbine-discharge temperature was set by the use of the variable-area exhaust nozzle to the maximum temperature possible without exceeding the limiting average turbine-discharge radial-temperature profile recommended by the manufacturer. Normal-engine-performance runs were made at the same inlet conditions as the augmented performance runs to provide a basis of comparison for the augmented performance.

An explanation of the symbols and calculations used in this report is presented in appendixes A and B, respectively.

## DISCUSSION OF RESULTS

### Selection of Coolant-Injection Station

Although the introduction of a coolant at the inlet to the compressor would be the most desirable system from the standpoint of simplicity of installation, previous sea-level investigations (references 2 and 3) have demonstrated that for coolant-air ratios in excess of 0.025 it is necessary to inject part of the coolant interstage of the compressor to preclude serious centrifuging of the coolant, cooling of the compressor casing, and subsequent damaging of the compressor by blade rubbing.

2565

Aside from the prevention of damage to the compressor, the primary criterion used in the selection of a desirable coolant-injection station was the attainment of maximum thrust augmentation.

The effects of the three coolant injection systems on the performance of the engine are shown in figure 5. The augmented jet-thrust ratio of 1.034, which was achieved at an augmented liquid ratio of 3.0 and a standard inlet-air temperature of 13° F, was essentially the same for both the introduction of the coolant in the sixth stage alone, and in the combination of sixth and ninth stages of the compressor. The augmented jet-thrust ratio is based on the normal jet thrust of the unaugmented engine, and the augmented liquid ratio is defined as the ratio of total liquid consumed (engine fuel plus coolant) to the normal engine fuel consumed. Introduction of the water-alcohol mixture at the compressor inlet resulted in a slight decrease in jet thrust from that of the unaugmented engine. This decrease in thrust can be understood from a general consideration of the effect of a water-alcohol mixture on the performance of the engine components. Coolant injection lowers the compressor-inlet-air temperatures and the temperatures at the various stages throughout the compressor, and results in higher corrected engine speeds. Such a rise in corrected engine speed would normally be expected to increase the air flow and the pressure ratio, which together produce an increase in thrust; but injection of a fluid other than air into the compressor, with attendant evaporation of the fluid through the compressor, can in some instances unbalance the matching among the compressor stages, and thereby cause a deviation from the expected compressor performance.

In this investigation, the air flow remained essentially constant with interstage injection, but a marked decrease was experienced when the coolant was introduced at the compressor inlet as shown in figure 6. The decrease in air flow with inlet injection was approximately equal to the weight of the added coolant; thus, the total gas flow remained constant as shown in figure 6, whereas the constant air flow encountered with interstage injection resulted in an increased total gas flow because of the weight of the added coolant. The constant total weight

flow experienced with inlet injection indicates that the injected coolant merely replaced an equal weight of air, and any cooling experienced at this point had a negligible effect upon the mass flow. A relatively low heat absorption by the coolant would be expected at the inlet temperature of 13° F under consideration here because the cooling effectiveness of a water-alcohol mixture decreases with temperature.

2565

Although sufficient data were not obtained to calculate the effect of coolant injection on compressor efficiency, an indication of the effect of increasing coolant flow on the compressor performance is shown in figure 7. With inlet injection, the compressor pressure ratio decreased slightly with a proportional decrease in average tail-pipe pressure. A portion of the decrease in pressure level through the engine is attributable to a slight reduction required in turbine-discharge temperature which will be discussed in a later section. The factors causing the reduction in jet thrust (fig. 5) for inlet injection were therefore the slight decrease in the tail-pipe pressure and the average turbine-discharge temperature. With interstage injection, there was an increase in compressor pressure ratio (fig. 7(a)) and tail-pipe pressure (fig. 7(b)). A portion of the increased pressure ratio was absorbed by a slight increase in pressure drop through the turbine. The gain in thrust resulting from interstage injection is therefore attributed mainly to the increased mass flow; the increased tail-pipe pressure accounts for the remainder of the thrust gain.

Ideal radial distribution of the coolant and air in the compressor was not achieved with either of the interstage systems or with the inlet injection system as evidenced by the decrease in average compressor-discharge radial temperature across the compressor-discharge annulus (fig. 8). This temperature decrease is caused by centrifuging of the unevaporated coolant toward the compressor casing. The increased centrifuging experienced with inlet injection is attributed to the greater distance traveled through the compressor by the liquid.

The average compressor-discharge radial temperature-distribution is uniform at the high inlet-injection flow rate (corresponding to a coolant-air ratio of 0.098); whereas this temperature distribution varied at the lower coolant-air ratios (fig. 8). It is rather unlikely that the centrifuging which resulted with lower coolant-air ratios decreased with increased coolant flow. The uniform average compressor-discharge radial-temperature distribution is therefore attributed to the mixing of the coolant and the air at some point in the compressor; the mixing was probably caused by compressor-blade stall in the later stages of the compressor. The probable existence of compressor-blade stall with engine-inlet coolant injection is reported for an axial-flow-type turbojet engine in reference 4 and is indicated by the difference in compressor pressure ratio achieved with inlet injection from that obtained with interstage injection as shown in figure 7(a).

Average turbine-discharge radial-temperature profiles which correspond to the average compressor-discharge radial-temperature profiles previously discussed are presented in figure 9. The average turbine-discharge radial-temperature profile peaked more sharply as coolant flow was increased. The effect of inlet coolant injection on the average turbine-discharge radial temperature profile was more pronounced than that experienced with the other two systems of coolant injection. Because the average turbine-discharge radial temperatures were limited by manufacturer's specifications, the average turbine-discharge temperature had to be decreased as the inlet-coolant injection rate increased in order to hold the radial temperatures within the specified limits. The effect of interstage-coolant injection on the average turbine-discharge temperature was negligible. A decrease in average turbine-discharge temperature would not be required on other types of engine with less critical blade-temperature limitations. The type of engine used will therefore influence the results when a liquid coolant is introduced at the engine inlet. The high coolant flows for inlet injection in figures 8 and 9 are not presented in the other figures in which the three systems of injection are compared because, on the basis of performance, they are of little significance. The data for the higher inlet-injection flows are presented in table I.

2565

The average turbine-discharge temperature was 18° F less with inlet injection than with interstage injection at a coolant-air ratio of 0.038 (fig. 10). This temperature decrease is reflected as a thrust decrease of approximately 0.5 percent at a constant mass flow and tail-pipe pressure. It should be reiterated that this decrease in average turbine-discharge temperature was necessitated by the maintenance of the maximum average turbine-discharge radial temperatures within the recommended profile, which was accomplished by increasing the exhaust-nozzle area. An increase in exhaust-nozzle area with inlet injection produced a slight decrease in tail-pipe pressure as was shown in figure 7(b).

A decrease in the engine fuel flow, which was required to maintain rated speed, was experienced with increased coolant-air ratios as shown in figure 11. This decrease in fuel flow was caused by partial replacement of the primary fuel by alcohol from the coolant. It would be desirable to operate with a coolant containing only sufficient alcohol to increase the enthalpy of the water vapor to the combustion temperature and thus to preclude fuel-throttle changes. In reference 1, it is reported that a constant throttle mixture would contain about 30 percent alcohol by volume. Because of the low inlet temperatures used in this investigation, it was necessary to use a greater alcohol concentration to prevent freezing of the coolant.

From the data presented herein, it was concluded that, on the basis of both performance and simplicity of installation, the sixth-stage injection system is the most desirable. Consequently, the investigation of this system was extended to determine its performance over a range of inlet temperatures.

## Effect of Inlet Temperature on Performance

Data were obtained for a range of inlet temperatures from -40° to 80° F to determine the effects of variations in engine-inlet temperature on performance with injection of the coolant into the sixth stage of the compressor (figs. 12 and 13). Jet and net thrust are presented as functions of coolant-air ratio, and augmented jet- and net-thrust ratios are shown as functions of augmented liquid ratio in figure 13 to permit a more generalized study of the data. The highest augmentation was attained at an inlet temperature of 80° F because of the improved vaporization and the attendant increased cooling that results at the higher inlet temperatures. However, at the lower inlet temperatures (-15° and -40° F), the temperature effects were so small as to be obscured in the normal experimental error of the data. A maximum augmented net-thrust ratio of 1.106 and a maximum augmented jet-thrust ratio of 1.062 were obtained at an augmented liquid ratio of 2.98 and an engine-inlet temperature of 80° F.

2565

## Operating Experience

Approximately 20 hours of operation of the engine with compressor coolant injection failed to produce any detrimental physical effects or engine-component deterioration. Losses in normal engine performance due to the presence of the injection tubes were insignificant, and no compressor blade rubbing was encountered.

## CONCLUDING REMARKS

After consideration of the thrust increases achieved, interstage injection of the coolant was deemed more desirable than inlet injection; sixth-stage injection is preferred over the combined sixth- and ninth-stage injection because of its relative simplicity.

The introduction of the water-alcohol mixture into the compressor of the engine under consideration produced little augmentation at simulated high-altitude, transonic-flight conditions. The relatively small increases in performance can be partially attributed to inadequate evaporation of the water-alcohol mixture at the low inlet temperatures investigated, but the more significant limitation is believed to be the negative influence of the liquid coolant on engine-component performance. The gain in thrust resulting from interstage injection is attributed primarily to the increased total gas flow; the increase in tail-pipe pressure accounts for only a small part of the thrust increase. The small decrease in engine pressure level encountered with inlet injection of the coolant in conjunction with the decrease in average turbine-discharge temperature produced a reduction in jet thrust. The decrease in average turbine-discharge temperature was necessitated by severe

alteration of the average turbine-discharge radial-temperature profile with high coolant flows. In general, it is concluded that the effectiveness of the introduction of a liquid coolant into the compressor as a means of thrust augmentation is considerably influenced by the design characteristics of the components of the engine being used.

Lewis Flight Propulsion Laboratory
National Advisory Committee for Aeronautics
Cleveland, Ohio

2565

# APPENDIX A

## SYMBOLS

The following symbols are used in this report:

| | |
|---|---|
| $A$ | cross-sectional area, sq ft |
| $C_p$ | specific heat of gas at constant pressure, Btu/(lb)(°F) |
| $F_j$ | jet thrust, lb |
| $F_n$ | net thrust, lb |
| $g$ | acceleration of gravity, ft/sec$^2$ |
| $J$ | mechanical equivalent of heat, ft-lb/Btu |
| $m$ | mass flow, slugs/sec |
| $P$ | total pressure, lb/sq ft absolute |
| $p$ | static pressure, lb/sq ft absolute |
| $R$ | gas constant, ft-lb/(lb)(°R) |
| $T$ | total temperature, °R |
| $t$ | static temperature, °R |
| $V$ | velocity, ft/sec |
| $W_a$ | air flow, lb/sec |
| $W_f$ | fuel flow, lb/hr |
| $W_g$ | gas flow, lb/sec |
| $W_l$ | total liquid flow, lb/hr |
| $W_{w,a}$ | water-alcohol flow, lb/hr |
| $\gamma$ | ratio of specific heats for gases |
| $\rho$ | mass density of gas, slugs/cu ft |

2565

2565

Subscripts:

| | |
|---|---|
| t | tail-pipe nozzle throat |
| 1 | cowl inlet |
| 3 | compressor discharge |
| 5 | turbine discharge |
| 8 | tail pipe |
| 0 | altitude-test-chamber discharge |

2565

## APPENDIX B

## METHODS OF CALCULATION

Air flow. - Engine air flow was determined from pressure and temperature measurements at station 1. Air flow was calculated by substitution of measured values in the following equation:

$$W_a = \rho_1 A_1 V_1 g = \frac{p_1 A_1}{R_1}\sqrt{\frac{2gJCp_1}{t_1}\left[\left(\frac{P_1}{p_1}\right)^{\frac{\gamma-1}{\gamma}} - 1\right]} \tag{B1}$$

Jet thrust. - Jet thrust was determined from total- and static-pressure measurements at station 8, static-pressure measurements at station 0, total-temperature measurements at station 5, and mass flow obtained by adding coolant and fuel flows to the air flow. Jet thrust was calculated by substitution of the these values in the equation

$$F_j = m_g V_t + A_t(p_t - p_0) \tag{B2}$$

$$= \frac{Wg_5}{g}\sqrt{\frac{2\gamma_5 g R_5 T_5}{(\gamma_5-1)}\left[1 - \left(\frac{p_t}{P_8}\right)^{\frac{\gamma_5-1}{\gamma_5}}\right]} + A_5(p_t - p_0) \tag{B3}$$

The value of $p_t$ was based on the fact that the nozzle was supercritically expanded at this flight condition:

$$\frac{P_8}{p_t} = \left(\frac{\gamma+1}{2}\right)^{\frac{\gamma}{\gamma-1}} \tag{B4}$$

The value of $A_t$ was calculated from continuity on the basis of the state and the properties of the gas, the weight flow, and the velocity at the choked nozzle exit. Ideal nozzle flow was assumed in calculating the jet thrust.

Net thrust. - Net thrust was obtained by subtracting the inlet-air momentum from the jet thrust:

$$F_n = F_j - \frac{W_a}{g} V_1 \tag{B5}$$

where

$$V_1 = \sqrt{2gR\frac{\gamma}{\gamma-1} T_1\left[1 - \left(\frac{p_0}{P_1}\right)^{\frac{\gamma-1}{\gamma}}\right]} \tag{B6}$$

## REFERENCES

1. Useller, James W., and Povolny, John H.: Experimental Investigation of Turbojet-Engine Thrust Augmentation by Combined Compressor Coolant Injection and Tail-Pipe Burning. NACA RM E51H16, 1951.

2. Povolny, John H., Useller, James W., and Chelko, Louis J.: Experimental Investigation of Thrust Augmentation of 4000-Pound-Thrust Axial-Flow-Type Turbojet Engine by Interstage Injection of Water-Alcohol Mixtures in Compressor. NACA RM E9K30, 1950.

3. Baron, Burnett, Dowman, Harry W., and Dackis, William C.: Experimental Investigation of Thrust Augmentation of Axial-Flow-Type 4000-Pound-Thrust Turbojet Engine by Water and Alcohol Injection at Compressor Inlet. NACA RM E7K14, 1948.

4. Dietz, Robert O. and Fleming, William A.: Altitude-Wind-Tunnel Investigation of Thrust Augmentation of a Turbojet Engine. II. Performance with Water Injection at Compressor Inlet. NACA RM E7C12, 1947.

TABLE I - TABULATED PERFORMANCE DATA

| Run | Injection station | Engine-inlet temperature $T_1$ (°R) | Compressor pressure ratio $P_3/P_1$ | Compressor-discharge temperature $T_3$ (°R) | Coolant flow $W_{w,a}$ (lb/hr) | Air flow $W_a$ (lb/sec) | Engine fuel flow $W_f$ (lb/hr) | Turbine-discharge temperature $T_5$ (°R) | Tail-pipe total pressure $P_8$ (lb/sq ft) | Net thrust $F_n$ (lb) | Jet thrust $F_j$ (lb) |
|---|---|---|---|---|---|---|---|---|---|---|---|
| 1 | No injection | 473 | 4.040 | 772 | 0 | 27.47 | 1662 | 1615 | 1729 | 1263 | 2098 |
| 2 | Inlet | 476 | 4.015 | 693 | 1818 | 26.76 | 1484 | 1595 | 1741 | 1247 | 2053 |
| 3 | | 475 | 4.023 | 647 | 3608 | 26.03 | 1398 | 1603 | 1724 | 1278 | 2080 |
| 4 | | 474 | 4.039 | 627 | 5072 | 26.23 | 1330 | 1596 | 1708 | 1278 | 2077 |
| 5 | | 476 | 4.015 | 581 | 7307 | 25.92 | 1175 | 1558 | 1648 | 1261 | 2048 |
| 6 | | 476 | 3.996 | 581 | 8999 | 25.46 | 1053 | 1519 | 1545 | 1112 | 1887 |
| 7 | Sixth stage | 479 | 4.046 | 736 | 742 | 27.43 | 1564 | 1615 | 1730 | 1260 | 2096 |
| 8 | | 475 | 4.099 | 700 | 1391 | 27.50 | 1535 | 1619 | 1748 | 1290 | 2125 |
| 9 | | 477 | 4.102 | 676 | 1874 | 27.47 | 1515 | 1616 | 1743 | 1293 | 2129 |
| 10 | | 476 | 4.148 | 629 | 2866 | 27.47 | 1432 | 1617 | 1760 | 1318 | 2154 |
| 11 | | 476 | 4.174 | 613 | 3585 | 27.47 | 1406 | 1615 | 1767 | 1335 | 2169 |
| 12 | Sixth and ninth stages | 473 | 4.131 | 733 | 1425 | 27.41 | 1536 | 1638 | 1740 | 1303 | 2138 |
| 13 | | 472 | 4.133 | 703 | 2130 | 27.38 | 1492 | 1628 | 1740 | 1305 | 2138 |
| 14 | | 476 | 4.140 | 686 | 2885 | 27.12 | 1465 | 1614 | 1743 | 1301 | 2125 |
| 15 | | 475 | 4.149 | 663 | 3596 | 27.36 | 1446 | 1610 | 1753 | 1325 | 2156 |
| 16 | Sixth stage | 540 | 3.615 | 850 | 0 | 24.42 | 1385 | 1621 | 1491 | 977 | 1767 |
| 17 | | 541 | 3.678 | 804 | 720 | 24.65 | 1343 | 1617 | 1527 | 1014 | 1812 |
| 18 | | 545 | 3.680 | 780 | 1440 | 24.54 | 1273 | 1603 | 1539 | 1019 | 1816 |
| 19 | | 542 | 3.763 | 751 | 2145 | 24.58 | 1275 | 1625 | 1577 | 1065 | 1859 |
| 20 | | 543 | 3.805 | 732 | 2915 | 24.66 | 1231 | 1613 | 1597 | 1081 | 1877 |
| 21 | | 543 | 3.799 | 706 | 3292 | 24.58 | 1194 | 1599 | 1584 | 1073 | 1872 |
| 22 | | 500 | 3.890 | 806 | 0 | 26.25 | 1534 | 1635 | 1623 | 1149 | 1966 |
| 23 | | 499 | 3.921 | 751 | 710 | 26.29 | 1475 | 1622 | 1665 | 1173 | 1994 |
| 24 | | 504 | 3.932 | 717 | 1480 | 26.32 | 1407 | 1608 | 1667 | 1175 | 1999 |
| 25 | | 504 | 3.969 | 701 | 1916 | 26.39 | 1385 | 1615 | 1687 | 1198 | 2020 |
| 26 | | 504 | 4.003 | 653 | 2892 | 26.28 | 1339 | 1619 | 1701 | 1220 | 2042 |
| 27 | | 502 | 4.044 | 635 | 3627 | 26.34 | 1309 | 1610 | 1704 | 1236 | 2061 |
| 28 | | 445 | 4.210 | 750 | 0 | 28.57 | 1744 | 1616 | 1764 | 1344 | 2185 |
| 29 | | 445 | 4.234 | 704 | 776 | 28.51 | 1670 | 1621 | 1782 | 1367 | 2207 |
| 30 | | 450 | 4.232 | 687 | 1474 | 28.53 | 1601 | 1601 | 1778 | 1365 | 2210 |
| 31 | | 447 | 4.289 | 651 | 2159 | 28.51 | 1571 | 1608 | 1794 | 1390 | 2232 |
| 32 | | 446 | 4.283 | 630 | 2886 | 28.45 | 1512 | 1598 | 1787 | 1389 | 2233 |
| 33 | | 444 | 4.350 | 619 | 3250 | 28.58 | 1519 | 1612 | 1813 | 1423 | 2265 |
| 34 | | 417 | 4.357 | 723 | 0 | 29.62 | 1828 | 1630 | 1830 | 1453 | 2299 |
| 35 | | 419 | 4.393 | 680 | 719 | 29.60 | 1795 | 1619 | 1840 | 1462 | 2309 |
| 36 | | 418 | 4.433 | 658 | 1436 | 29.62 | 1739 | 1619 | 1842 | 1475 | 2323 |
| 37 | | 418 | 4.423 | 629 | 2159 | 29.59 | 1673 | 1608 | 1834 | 1477 | 2325 |
| 38 | | 419 | 4.463 | 612 | 2892 | 29.58 | 1647 | 1615 | 1855 | 1506 | 2356 |
| 39 | | 417 | 4.475 | 603 | 3270 | 29.62 | 1626 | 1613 | 1848 | 1512 | 2361 |

NACA

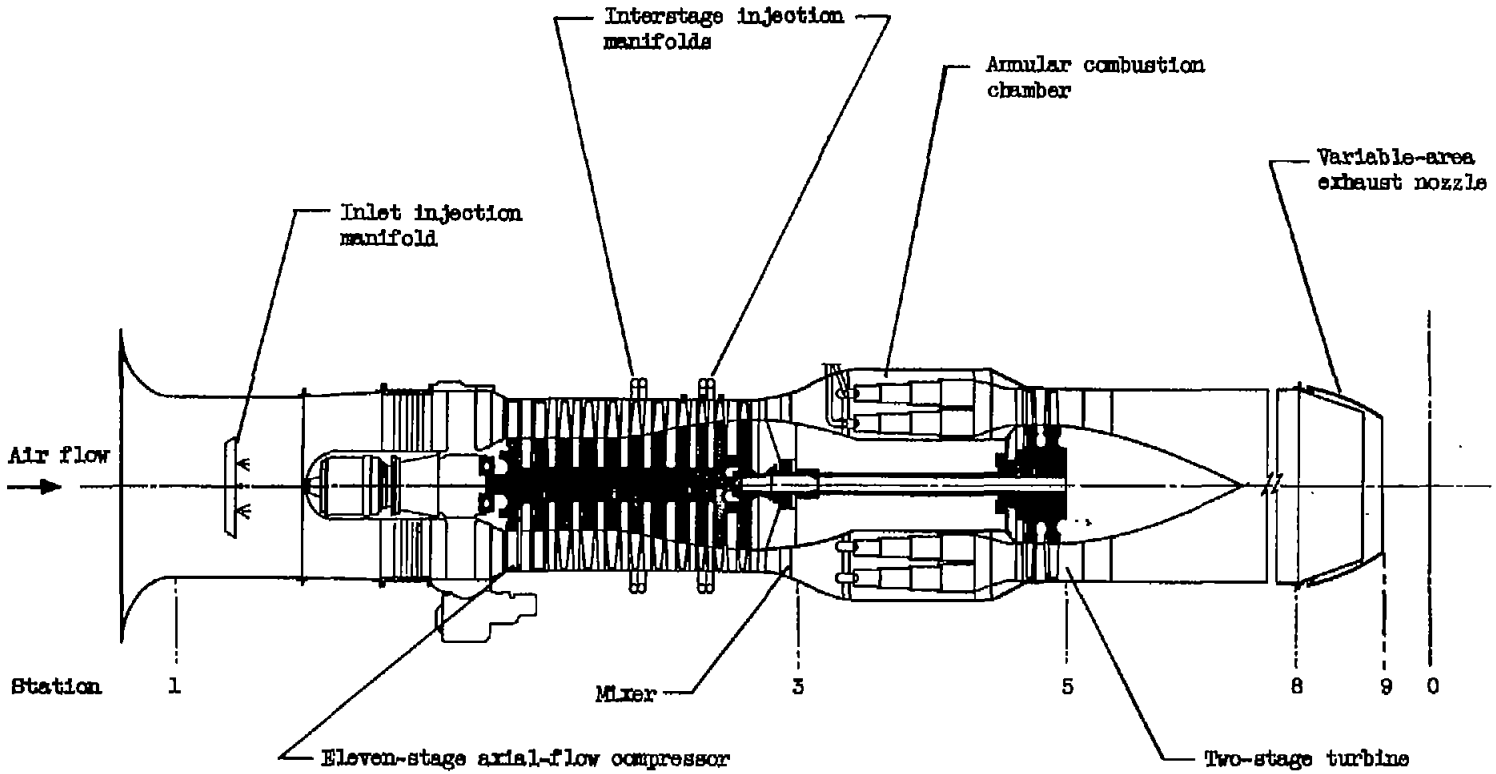


CD-2670

Figure 1. - Turbojet-engine configuration and station designations.

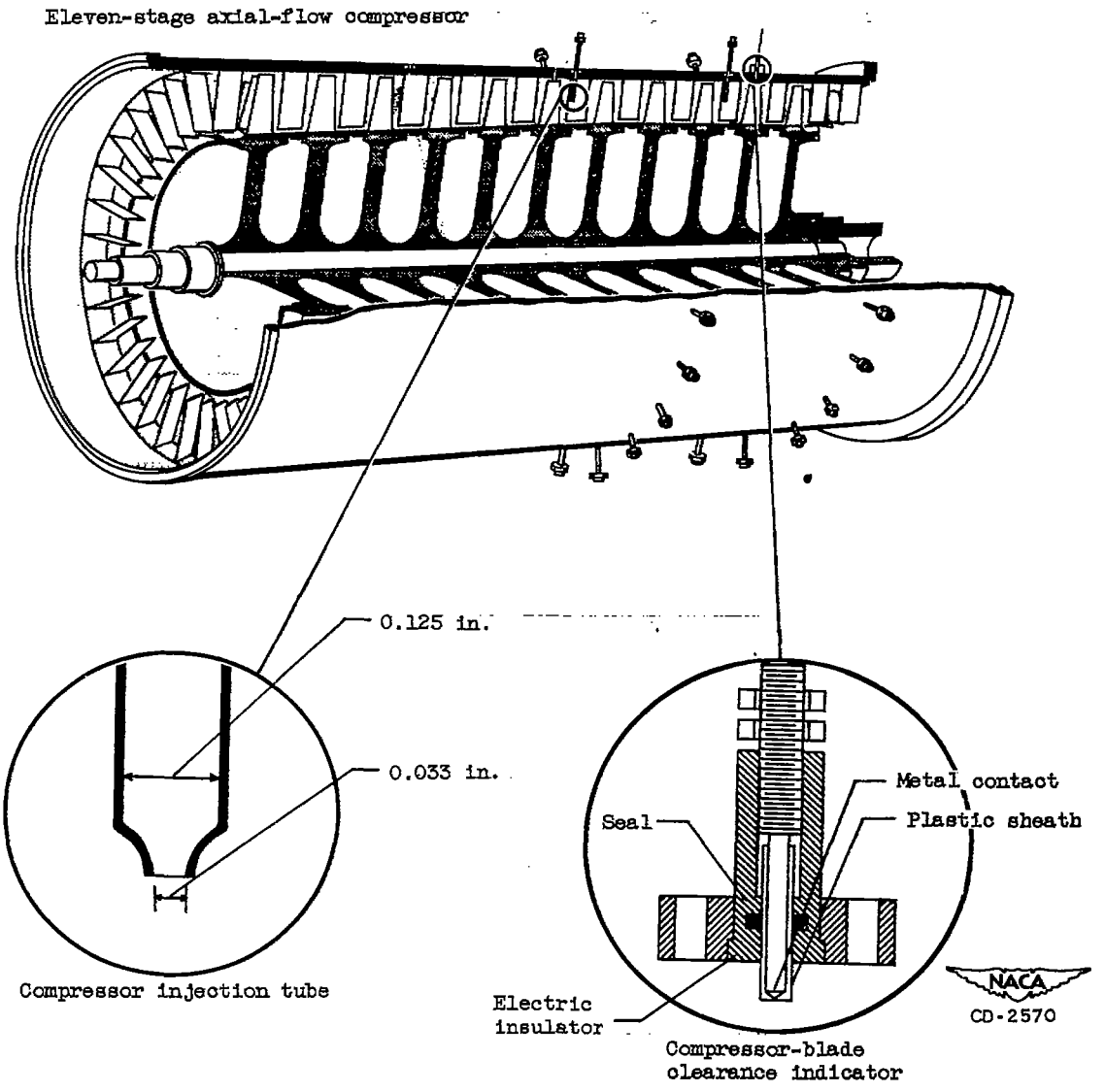


Figure 2. - Eleven-stage axial-flow compressor, showing injection tubes installed at sixth and ninth stages, and compressor-blade clearance indicators at seventh, eighth, ninth and tenth stages.

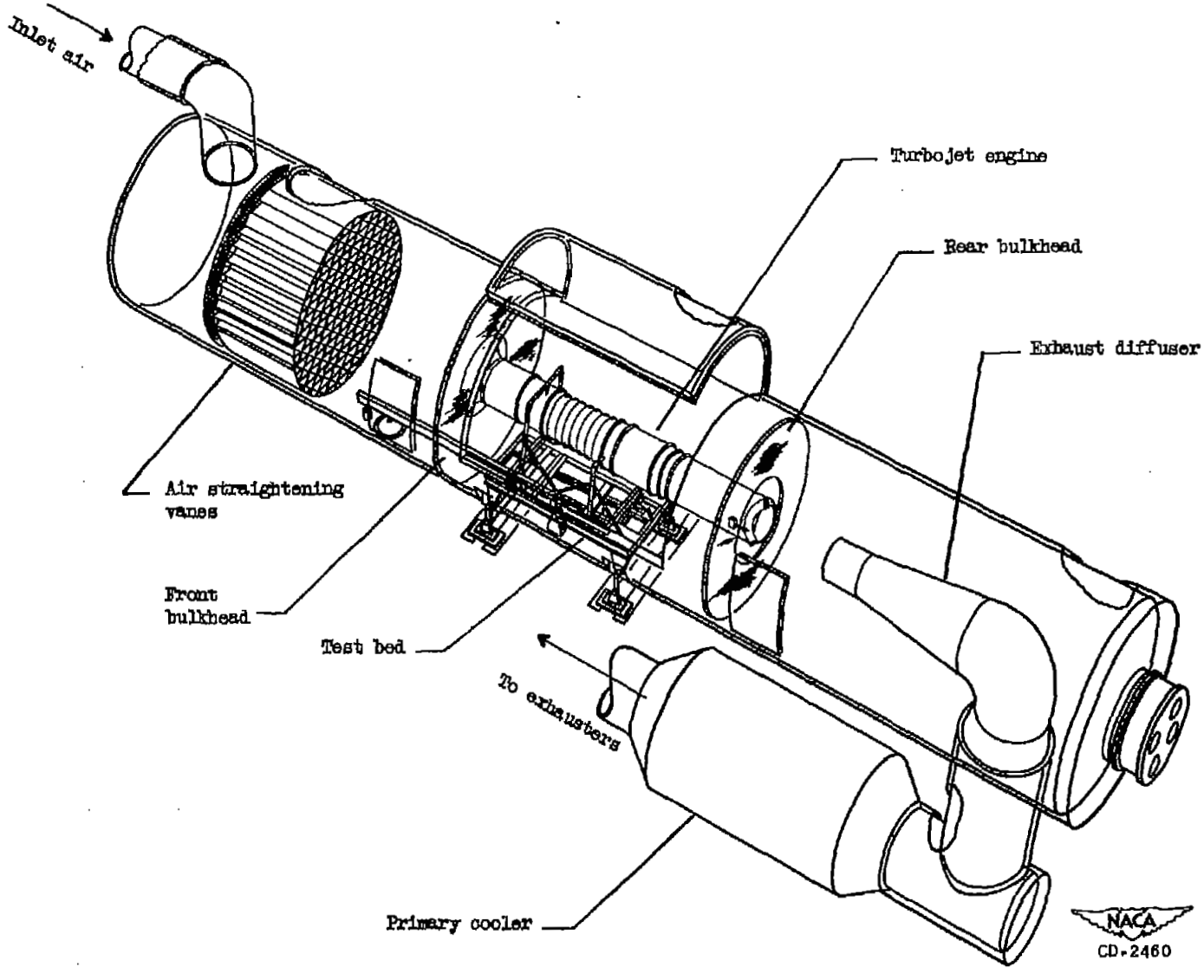


(a) Sketch of chamber showing engine installed on test bed.

Figure 3. - Turbojet engine in altitude test chamber.

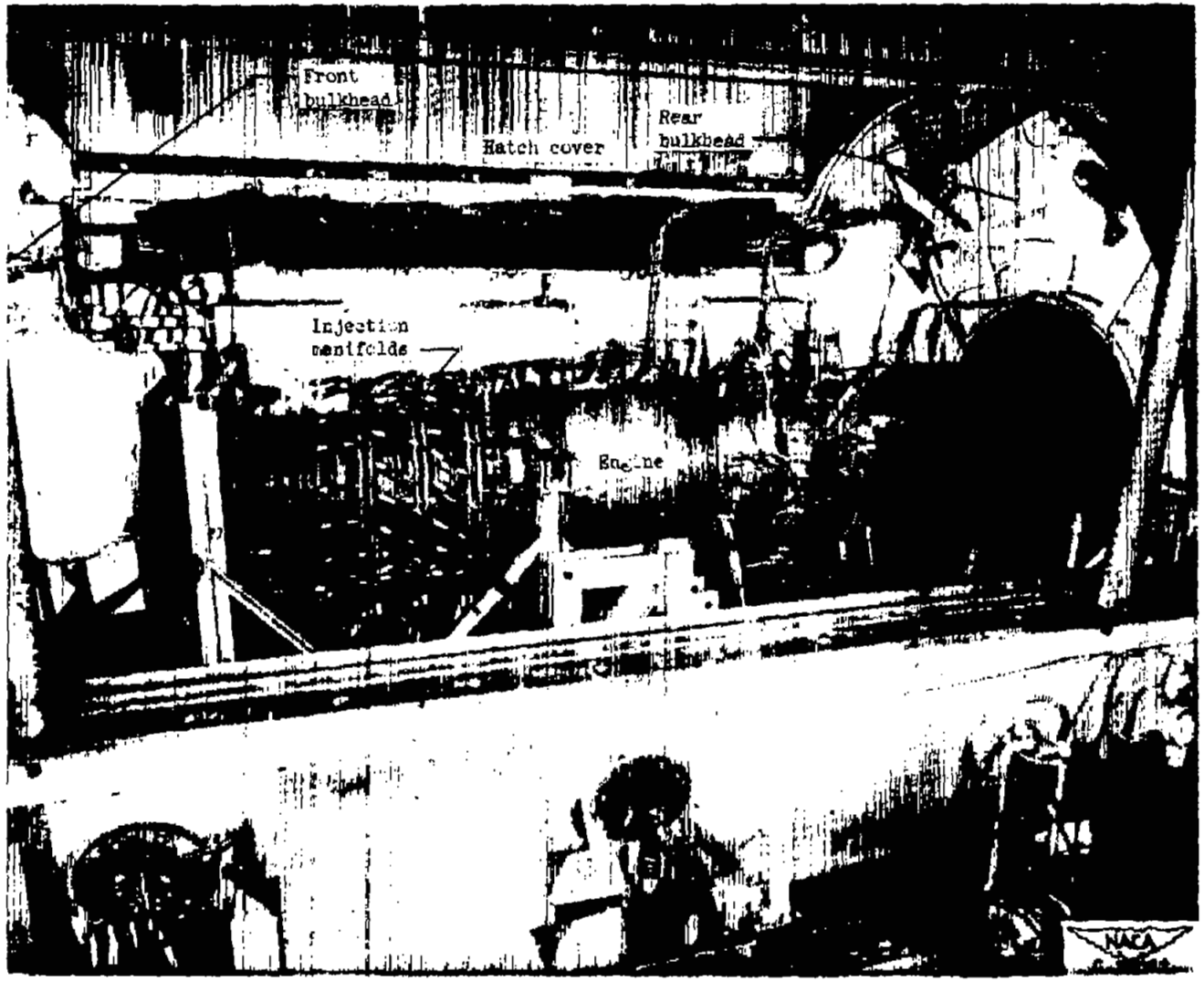


(b) Photograph of installation.

Figure 3. - Concluded. Turbojet engine in altitude test chamber.

2565

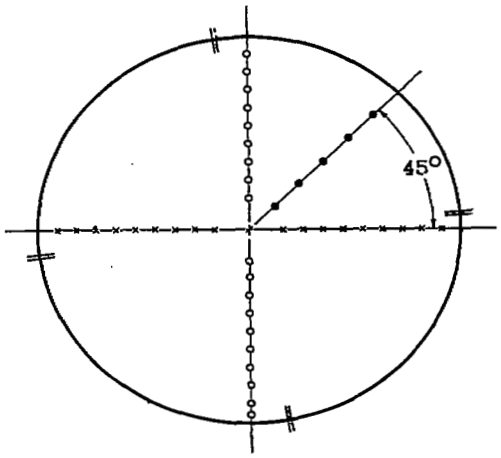


Station 1, cowl inlet.

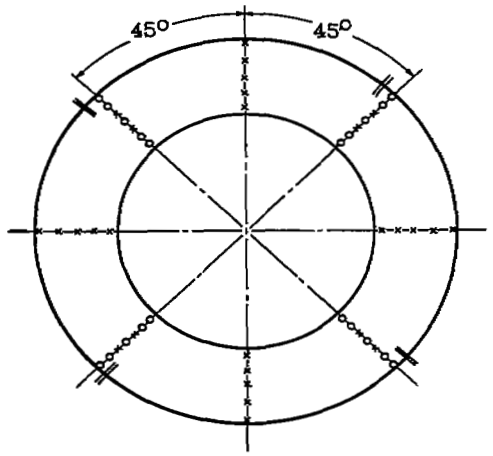


Station 3, compressor discharge.

o - Total-pressure tubes
● - Static-pressure tubes
// - Wall static orifices
× - Thermocouples

NACA
CD-2573

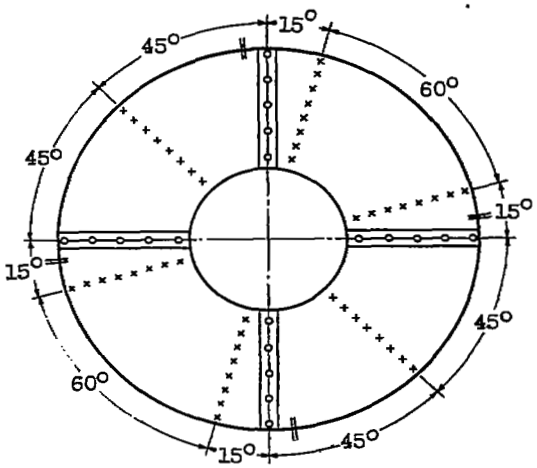


Station 5, turbine discharge.

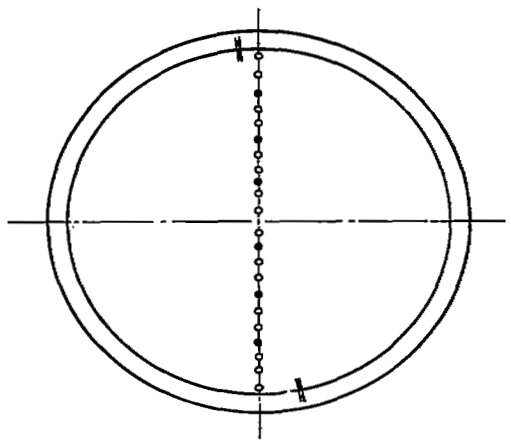

Station 8, tail pipe.

Figure 4. - Location of temperature and pressure instrumentation.

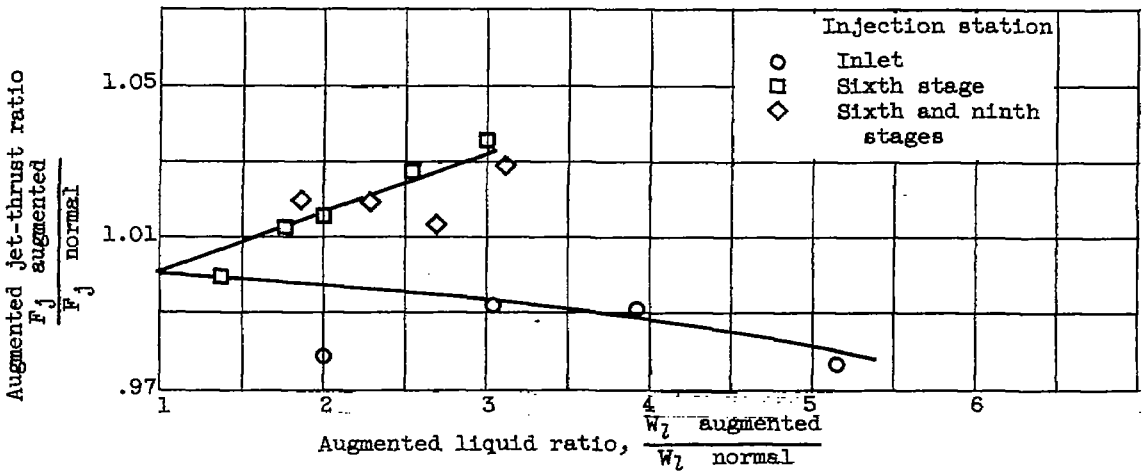


Figure 5. - Variation of augmented jet-thrust ratio with augmented liquid ratio for compressor-inlet, sixth-stage, and sixth- and ninth-stage water-alcohol injection. Engine-inlet temperature, 130° F.

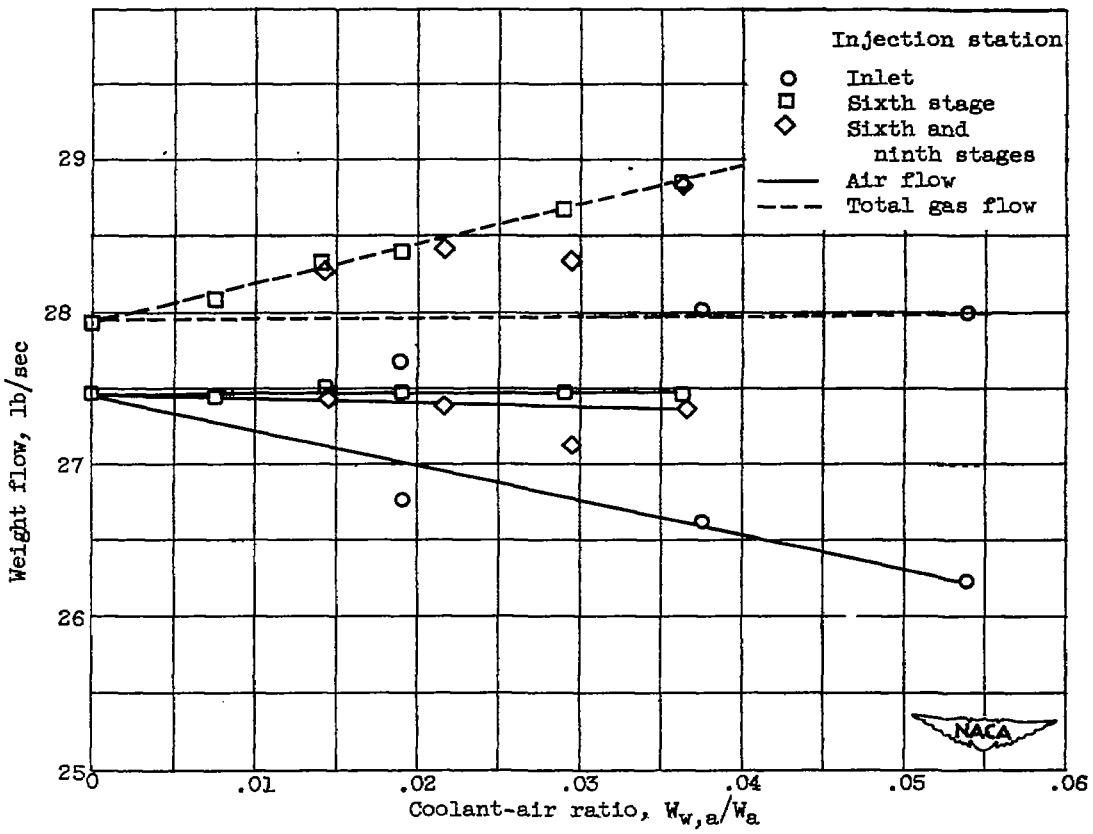


Figure 6. - Effect of water-alcohol injection on engine air flow for compressor-inlet, sixth-stage, and sixth- and ninth-stage injection. Engine-inlet temperature, 13° F.

2565

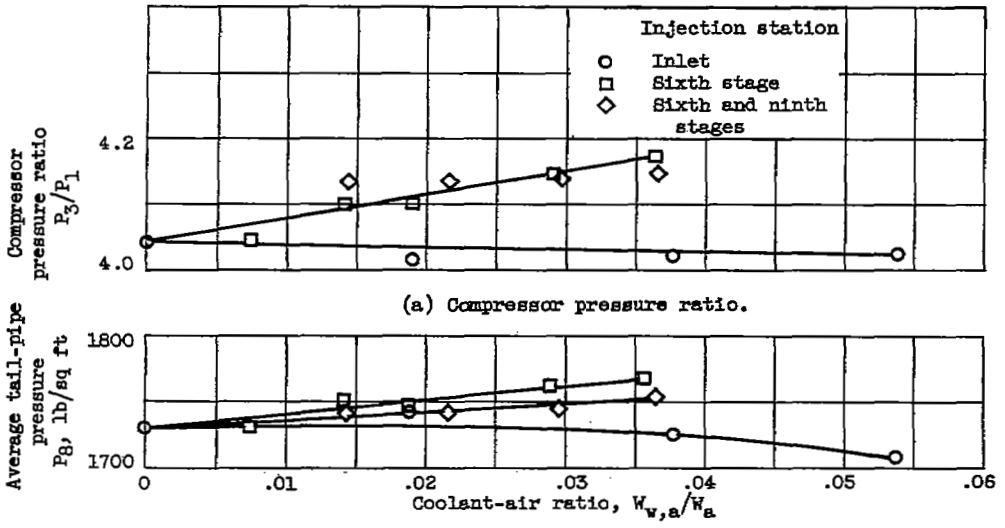


(b) Average tail-pipe pressure.

Figure 7. - Variation of compressor pressure ratio and tail-pipe pressure with coolant-air ratio for compressor-inlet, sixth-stage, and sixth- and ninth-stage water-alcohol injection. Engine inlet temperature, 13° F.

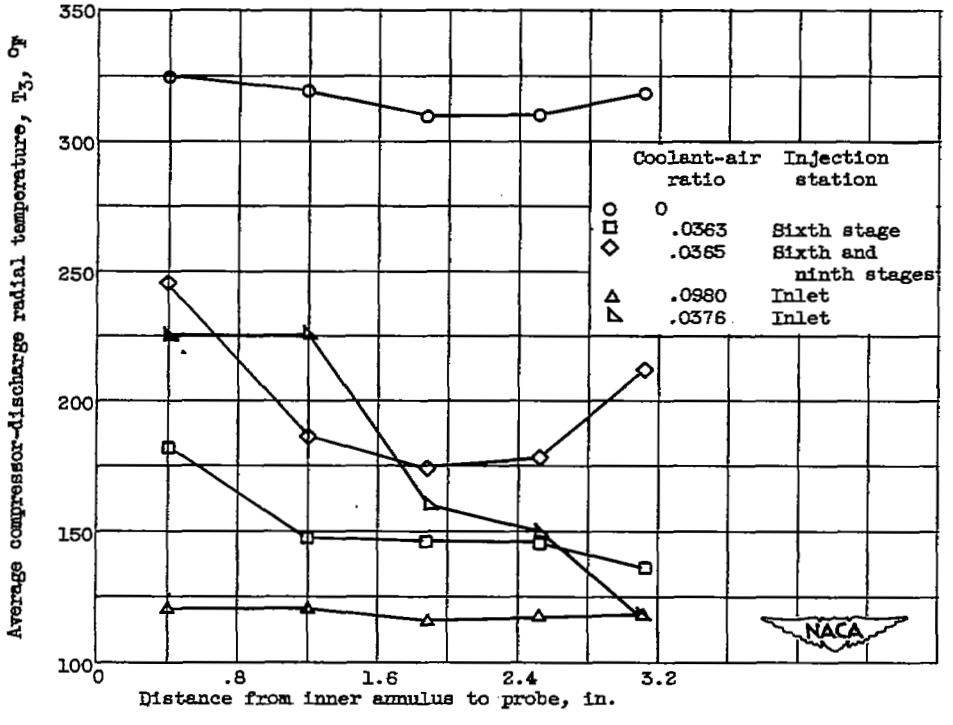


Figure 8. - Compressor-discharge radial-temperature distribution with compressor-inlet, sixth-stage, and sixth- and ninth-stage water-alcohol injection. Engine-inlet temperature, 13° F.

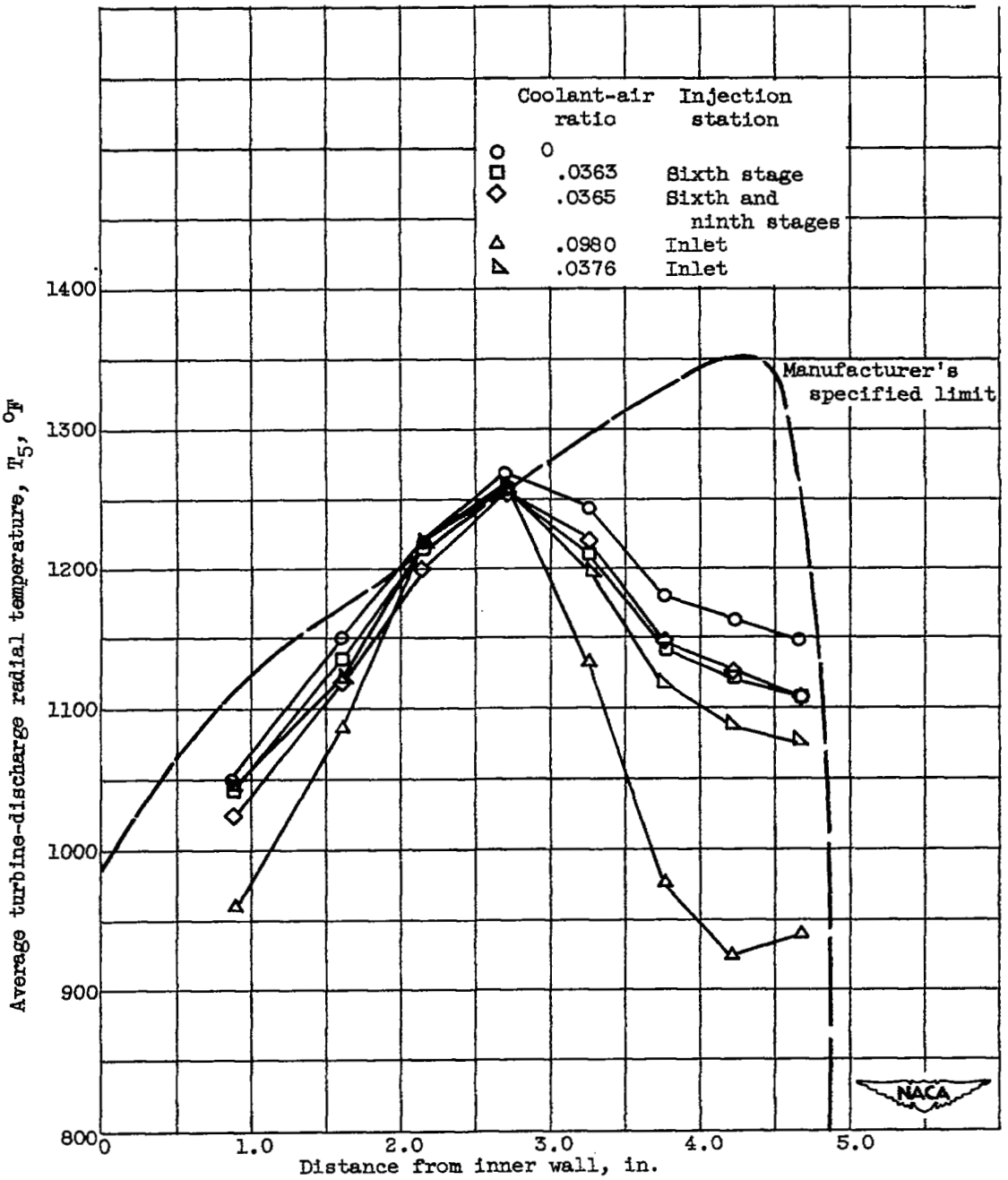


Figure 9. - Average turbine-discharge radial-temperature distribution with compressor-inlet, sixth-stage, and sixth- and ninth-stage water-alcohol injection. Engine-inlet temperature, 13° F.

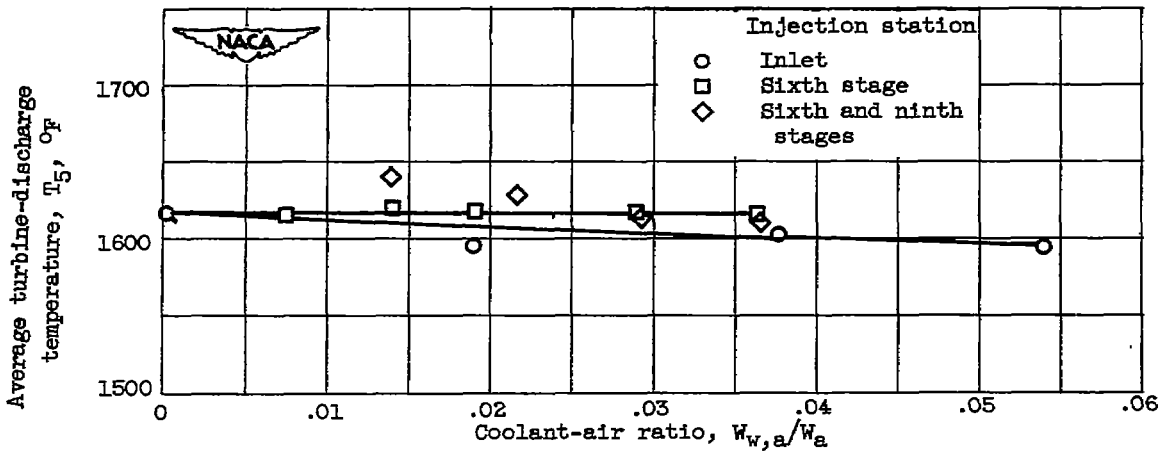


Figure 10. - Variation of tail-pipe temperature with coolant-air ratio for compressor-inlet, sixth-stage, and sixth- and ninth-stage water-alcohol injection. Engine-inlet temperature, 13° F.

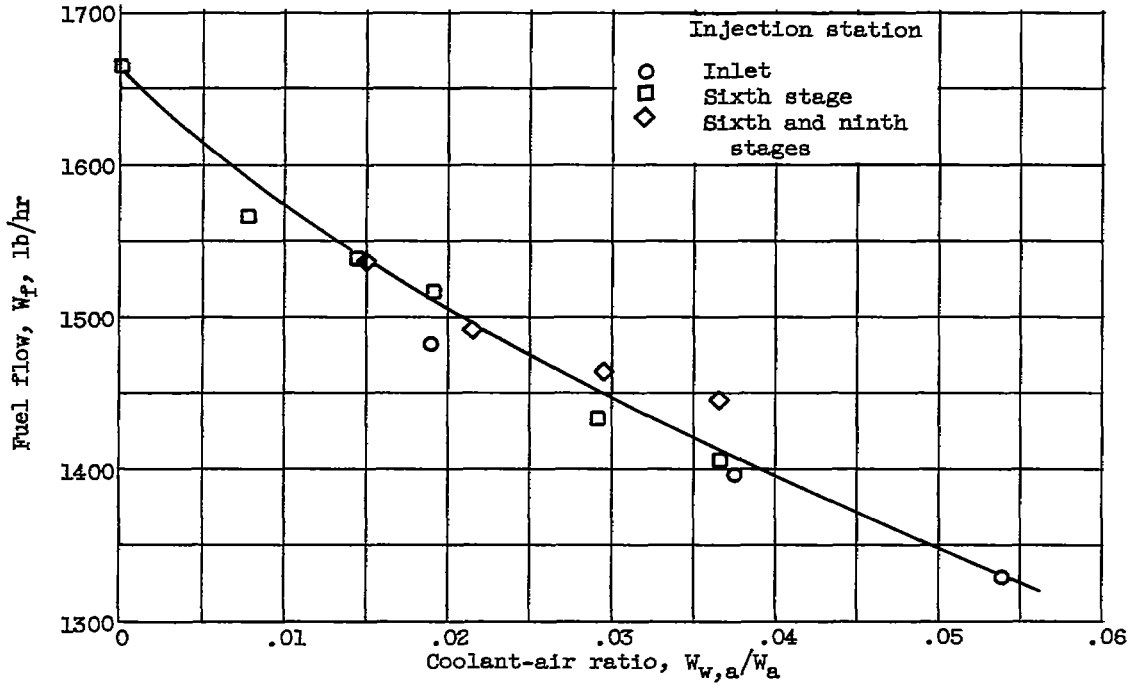


Figure 11. - Effect of water-alcohol injection on engine fuel flow for compressor-inlet, sixth-stage, and sixth- and ninth-stage injection. Engine-inlet temperature, 13° F.

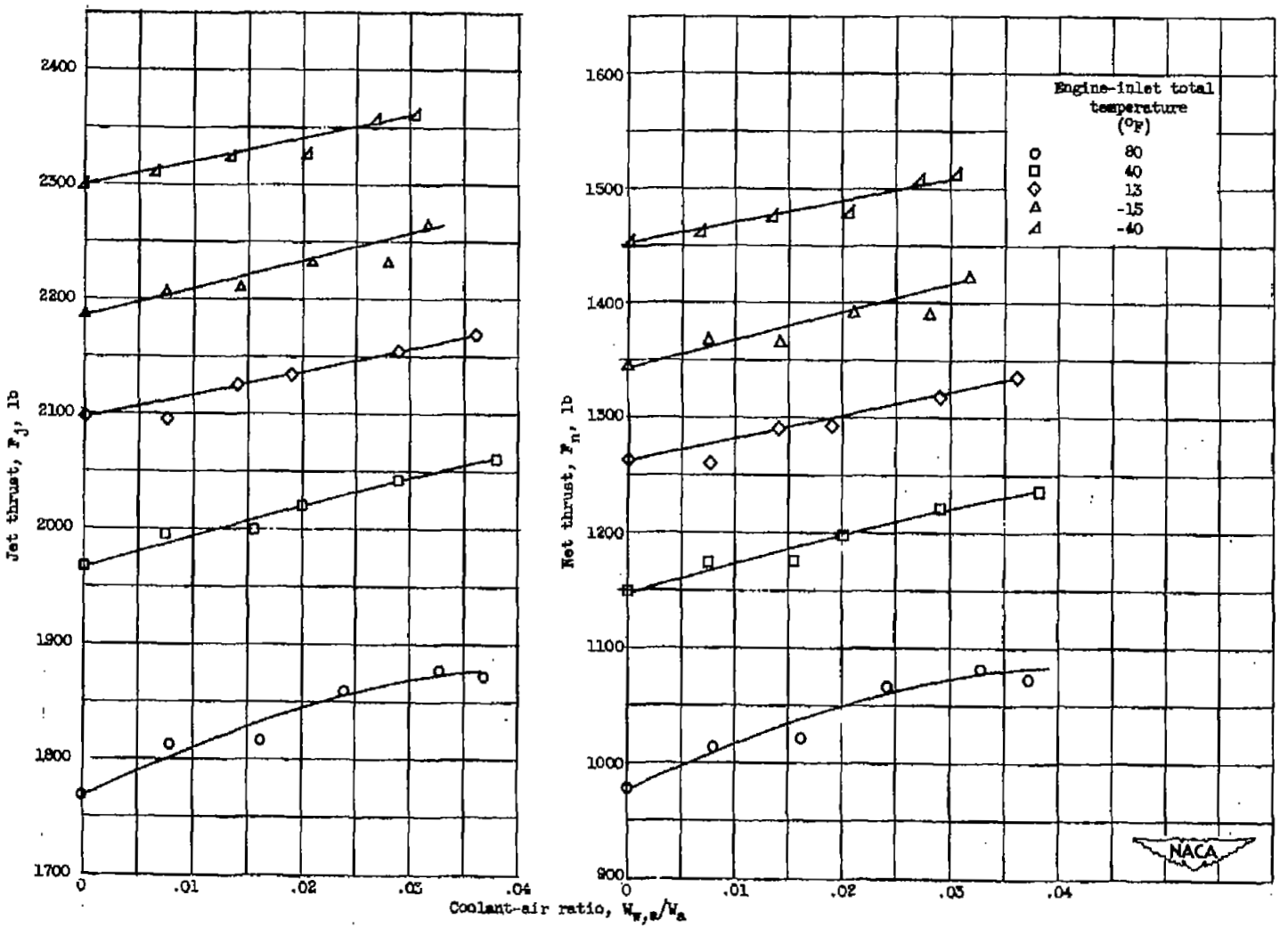


(a) Jet thrust.

(b) Net thrust.

Figure 12. - Turbojet-engine thrust variation with coolant-air ratio for water-alcohol injection at sixth compressor stage.

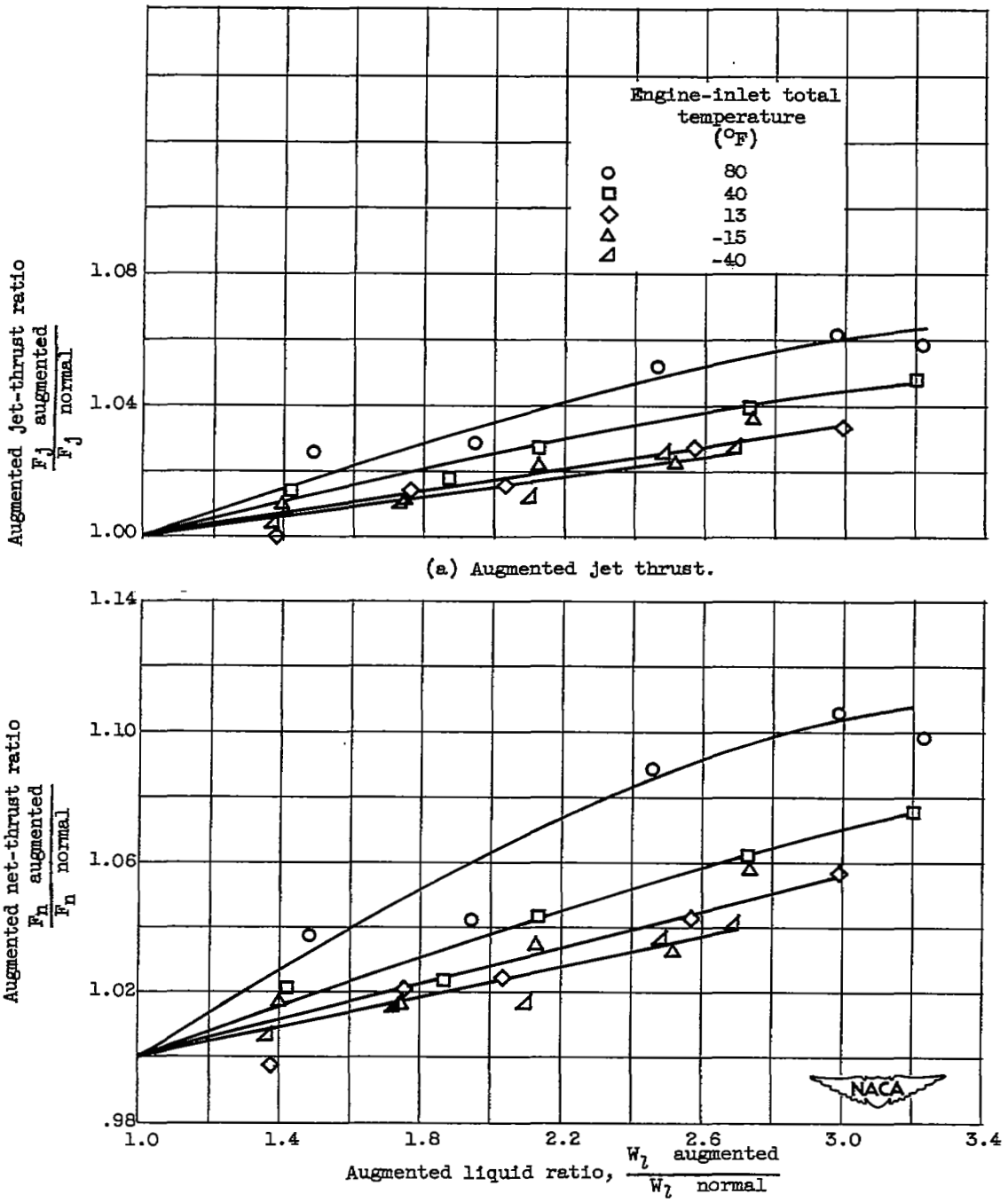


(a) Augmented jet thrust.

(b) Augmented net thrust.

Figure 13. - Variation of augmented jet- and net-thrust ratios with augmented liquid ratio for water-alcohol injection at the sixth compressor stage.

[redacted]

NACA-Langley - 8-18-52 - 4000

SECURITY INFORMATION

[redacted]

LANGLEY RESEARCH CENTER
3 1176 01355 2329

[redacted]