SUB-LIBRARY

Copy No. 3

~~CONFIDENTIAL~~

RM No. SA8J22

NACA RM No. SA8J22

17 NOV 1948

NACA

FOR REFERENCE

NOT TO BE TAKEN FROM THIS ROOM

RESEARCH MEMORANDUM

for the

Air Materiel Command, U. S. Air Force

AN INVESTIGATION OF THE MCDONNELL XP-85 AIRPLANE IN THE AMES 40- BY 80-FOOT WIND TUNNEL.- PRESSURE-DISTRIBUTION TESTS

By Lynn W. Hunton and Harry A. James

Ames Aeronautical Laboratory
Moffett Field, Calif.

CLASSIFICATION CHANGED

UNCLASSIFIED Inactive

By authority of J. W. Crowley per NACA Release Form #3005 Date 6-15-55 NB
ACR 6-10-55

CLASSIFIED DOCUMENT

This document contains classified information affecting the National Defense of the United States within the meaning of the Espionage Act, USC 50:31 and 32. Its transmission or the revelation of its contents in any manner to an unauthorized person is prohibited by law. Information so classified may be imparted only to persons in the military and naval Services of the United States, appropriate civilian officers and employees of the Federal Government who have a legitimate interest therein, and to United States citizens of known loyalty and discretion who of necessity must be informed thereof.

TECHNICAL EDITING WAIVED

NATIONAL ADVISORY COMMITTEE FOR AERONAUTICS

WASHINGTON

Oct. 22, 1948

LANGLEY MEMORIAL AERONAUTICAL LABORATORY
Langley Field, Va.

~~CONFIDENTIAL~~

Inactive

NASA Technical Library
3 1176 01437 2784

NATIONAL ADVISORY COMMITTEE FOR AERONAUTICS

RESEARCH MEMORANDUM

for the

Air Materiel Command, U. S. Air Force

AN INVESTIGATION OF THE MCDONNELL XP-85 AIRPLANE IN THE AMES 40- BY 80-FOOT WIND TUNNEL.- PRESSURE-DISTRIBUTION TESTS

By Lynn W. Hunton and Harry A. James

SUMMARY

Pressure measurements were made during wind-tunnel tests of the McDonnell XP-85 parasite fighter. Static-pressure orifices were located over the fuselage nose, over the canopy, along the wing root, and along the upper and lower stabilizer roots. A total-pressure and static-pressure rake was located in the turbojet engine air-intake duct. It was installed at the station where the compressor face would be located. Pressure data were obtained for two airplane conditions, clean and with skyhook extended, through a range of angle of attack and a range of yaw.

INTRODUCTION

At the request of the Air Materiel Command, U. S. Air Force, the aerodynamic characteristics of the McDonnell XP-85 airplane have been investigated in the Ames 40- by 80-foot wind tunnel. The investigation consisted of two parts: (1) The determination of the force and moment characteristics and (2) the measurement of both the distribution of pressure over portions of the airplane and the air-flow characteristics in the fuselage duct. The results of the first part of the investigation are given in reference 1 and reported herein in tabular form are the results of the second part.

[redacted]

SYMBOLS AND COEFFICIENTS

For these tests the angular displacements of the airplane are referred to the wind axes as shown in figure 1. The coefficients and symbols are defined as follows:

P pressure coefficient $\left(\frac{p_l - p_o}{q_o}\right)$

$\frac{H_l - p_o}{H_o - p_o}$ ram-recovery ratio

$\frac{V_l}{V_o}$ inlet velocity ratio $\left(\frac{H_l - p_o}{H_o - p_o} - P\right)$

α angle of attack of fuselage thrust axis, corrected to free-stream conditions, degrees

ψ angle of yaw, degrees

$\bar{c}$ wing mean aerodynamic chord $\left(\frac{\int_0^{b/2} c^2 dy}{\int_0^{b/2} c\, dy}\right)$, 5.15 feet

H total pressure, pounds per square foot

p static pressure, pounds per square foot

q stream dynamic pressure $\left(\frac{1}{2}\rho V^2\right)$, pounds per square foot

V stream velocity, feet per second

ρ mass density of air, slugs per cubic foot

Subscripts

l local

o free stream

[redacted]

DESCRIPTION OF THE AIRPLANE AND APPARATUS

The McDonnell XP-85 airplane is a parasite fighter designed to operate from a B-36 airplane. The airplane is characterized by swept-back wings and an unorthodox five-unit tail and is powered by a turbo-jet engine. A three-view drawing of the airplane with pertinent dimensions is shown in figure 2. A more complete description of the airplane can be found in reference 1.

The installation of the airplane in the tunnel test section is shown in figure 3. The only modification to the airplane made for these wind-tunnel tests was the replacement of the turbo-jet engine and tail pipe in the fuselage with a straight circular duct of constant cross section (approximately 21 in. diameter). The aft end of the tail pipe was capped with an annular plate which reduced the exhaust area by approximately 30 percent.

Static-pressure orifices were located at the root of the right wing, at the root of the upper-right and lower-right stabilizers, and over the nose and canopy of the fuselage as shown by the diagram of figure 4. The exact location of each orifice, except those in the duct, is given in table 1. The orifices on the wing and stabilizers were located only on the upper surface of the respective sections. All orifices were flush with the airplane skin except those over the stabilizer roots where pressure belts were used. For the pressure survey of the duct a rake containing total- and static-pressure tubes was installed, as shown in figure 4, at a station corresponding to the location of the face of the compressor of the turbo-jet engine.

TESTS, RESULTS, AND DISCUSSION

Pressure-distribution data were obtained through a range of angles of attack at fixed angles of yaw and a range of angles of yaw at fixed angles of attack. The major portion of the data was obtained at a tunnel airspeed of about 155 miles per hour (60 lb/sq ft dynamic pressure). This gave a Reynolds number of 7.4×10^6 based on the M.A.C. of 5.15 feet. In a few instances the test dynamic pressure was reduced to 25 pounds per square foot in order to obtain values of peak negative pressures. Two conditions of the airplane were investigated: clean and with skyhook extended. However, data from the rake in the duct were not taken with the skyhook extended since the extension could not alter the flow in the duct.

The static-pressure data obtained are presented as pressure coefficients P. The total-pressure data (from the rake in the duct) are presented as values of ram-recovery ratio (H_l-p_o/H_o-p_o). No corrections have been applied to the data.

Table 2 is a listing of the test conditions and shows in which of the succeeding tables the data for a particular test condition can be found. Tables 3 through 8 include the data obtained from tests of the airplane in the clean condition. Tables 9 through 14 include the data obtained from tests of the airplane with skyhook extended. The values of pressure coefficient obtained at reduced tunnel speed are included in table 3(a) and so marked. Where the pressure coefficient exceeded that measurable at the higher test speed, the orifice was sealed and thus no value appears in the tables. Values of pressure coefficient or ram-recovery ratio which are presented but are considered doubtful because of partial leaks or plugs in the pressure line have lines drawn through them. With the exception noted below all other values are believed correct.

Computation of the intake velocity ratio at which the air-intake system operated gave improbable values. The total-pressure tubes indicated almost 100-percent ram recovery and this is believed to be correct. However, three of the static-pressure tubes had very high readings indicating a velocity ratio of 0.28. The fourth had a very low reading indicating a velocity ratio of 0.97. A calculated value of velocity ratio, assuming reasonable duct losses, was 0.80. A re-examination of the data and computations revealed no explanation for the discrepancy. Checks made during the test showed no plugs or leaks in the static tubes or leads. It can only be concluded that the tubes were not indicating true static pressure.

Ames Aeronautical Laboratory,
National Advisory Committee for Aeronautics,
Moffett Field, Calif.

REFERENCE

1. Hunton, Lynn W., and James, Harry A.: An Investigation of the McDonnell XP-85 Airplane in the Ames 40- by 80-Foot Wind Tunnel.- Force and Moment Tests. NACA RM No. SA8I23, U. S. Air Force, Sept. 27, 1948.

TABLE 1.– LOCATION OF PRESSURE ORIFICES

(a) Wing root

Orifice No.	Percent chord
27	0
28	1.25
29	2.5
30	7.5
31	15
32	25
33	35
34	45
35	60
36	66
37	75
38	85

(b) Upper stabilizer root

Orifice No.	Percent chord
77	0
76	2.5
75	5
74	10
73	20
72	30
71	40
70	50
69	60
68	70
67	85

(c) Lower stabilizer root

Orifice No.	Percent chord
87	0
86	5
85	10
84	20
83	30
82	40
81	50
80	60
79	70
78	78

TABLE 1.– CONCLUDED

(d) Fuselage and canopy

Orifice No.	F.S.[a]	B.L.[b]	W.L.[c]	Orifice No.	F.S.[a]	B.L.[b]	W.L.[c]
1	-0.8	3.0	–	40	2.7	– –	0
2	0.2	3.0	–	41	5.8	– –	0
3	5.0	3.0	–	42	9.0	– –	0
4	10.0	3.0	–	43	11.8	– –	0
5	15.0	3.0	–	44	15.0	– –	-1.7
6	20.0	3.0	–	45	20.3	– –	-1.5
7	30.0	3.0	–	46	30.0	– –	-1.7
8	40.0	3.0	–	47	40.0	– –	-1.7
9	52.8	3.0	–	48	50.0	– –	-1.7
10	61.0	3.0	–	49	0	– –	4.0
11	69.0	3.0	–	50	2.7	– –	4.0
12	74.0	3.0	–	51	5.8	– –	4.0
13	79.0	3.0	–	52	9.0	– –	4.0
14	83.0	3.0	–	53	11.8	– –	4.0
15	87.0	3.0	–	54	15.0	– –	4.0
16	91.0	3.0	–	55	0	– –	8.0
17	96.0	3.0	–	56	2.7	– –	8.0
18	117.6	3.0	–	57	5.8	– –	8.0
19	70.0	– –	44	58	9.0	– –	8.0
20	74.0	– –	44	59	11.8	– –	8.0
21	78.0	– –	44	60	15.0	– –	8.0
22	82.0	– –	44	61	0	– –	-4.0
23	87.0	– –	44	62	2.7	– –	-4.0
24	92.0	– –	44	63	5.8	– –	-4.0
25	100.0	– –	44	64	9.0	– –	-4.0
26	113.0	– –	44	65	11.8	– –	-4.0
39	0	– –	0	66	15.0	– –	-4.0

[a]Fuselage station, longitudinal distance from plane located 0.8 in. behind the face of the fuselage nose, in inches.

[b]Buttock line, lateral distance from plane of symmetry, in inches.

[c]Water line, vertical distance from thrust axis, in inches.

TABLE 2.– SUMMARY OF TEST CONDITIONS

Table No.	Angle-of-attack range, α (deg)	Angle-of-yaw range, ψ (deg)	Configuration
3	–4.0 to 16.3	0	Clean
4	–4.0 to 16.3	4	↓
5	–4.0 to 16.3	8	↓
6	0.1	–12 to 12	↓
7	6.2	–12 to 12	↓
8	12.3	–12 to 12	↓
9	–4.0 to 14.3	0	Skyhook extended
10	–4.0 to 14.3	4	↓
11	–4.0 to 14.3	8	↓
12	0.1	–12 to 12	↓
13	6.2	–12 to 12	↓
14	12.3	–12 to 12	↓

TABLE 3.- PRESSURE COEFFICIENTS FOR THE AIRPLANE IN THE CLEAN CONDITION; ψ, 0°

(a) Wing root

Orifice No. \ α	-4.0	0.1	4.1	8.2	12.3	14.3	16.3
27	0.45	0.42	-0.33	-1.63	-3.58[a]	-2.66[a]	-5.25[a]
28	.19	-.37	-1.26	-2.29	-3.46[a]	-4.00[a]	-4.12[a]
29	.06	-.36	-.89	-1.46	-2.17	-2.45	-2.50
30	-.13	-.43	-.76	-1.08	-1.46	-1.59	-1.56
31	-.21	-.43	-.67	-.90	-1.15	-1.22	-1.15
32	-.32	-.50	-.71	-.90	-1.10	-1.15	-1.09
33	-.35	-.50	-.65	-.78	-.92	-.97	-.96
34	-.40	-.50	-.63	-.73	-.82	-.88	-.89
35	-.43	-.50	-.57	-.63	-.69	-.76	-.83
36	-.38	-.43	-.50	-.56	-.61	-.67	-.76
37	-.35	-.38	-.42	-.44	-.47	-.54	-.65
38	-.28	-.30	-.31	-.32	-.34	-.40	-.52

(b) Upper stabilizer root

Orifice No. \ α	-4.0	0.1	4.1	8.2	12.3	14.3	16.3
67	~~-0.38~~	~~-0.32~~	~~-0.32~~	~~-0.30~~	~~-0.29~~	~~-0.30~~	~~-0.29~~
68	.04	.07	.10	.10	.09	.08	.06
69	-.13	-.05	-.04	-.03	-.02	-.03	-.04
70	-.14	-.14	-.12	-.12	-.10	-.14	-.16
71	-.25	-.28	-.28	-.27	-.30	-.33	-.36
72	-.37	-.46	-.49	-.49	-.57	-.62	-.69
73	-.03	-.17	-.28	-.43	-.53	-.57	-.59
74	-.28	-.51	-.61	-.49	-.50	-.58	-.63
75	-.01	-.25	-.43	-.62	-.77	-.88	-.96
76	-.70	-.18	.14	.37	.37	.32	.24
77	~~.02~~	~~.11~~	~~.21~~	~~.30~~	~~.39~~	~~.43~~	~~.47~~

[a]Test dynamic pressure reduced to 25 lb/sq ft

Note: Lines have been drawn through doubtful data.

TABLE 3.– CONTINUED

(c) Lower stabilizer root

Orifice No. \ α	−4.0	0.1	4.1	8.2	12.3	14.3	16.3
78	0.08	0.07	0.09	0.10	0.10	0.08	0.06
79	.03	.03	.02	−.01	−.03	−.04	−.06
80	−.03	−.06	−.09	−.12	−.15	−.16	−.18
81	−.01	−.03	−.05	−.08	−.11	−.13	−.16
82	−.01	−.04	−.08	−.12	−.15	−.18	−.21
83	~~−.34~~	~~−.34~~	~~.34~~	~~.33~~	~~−.31~~	~~−.33~~	~~−.33~~
84	~~−.34~~	~~−.34~~	~~.33~~	~~−.32~~	~~−.31~~	~~−.33~~	~~−.32~~
85	.13	.08	.04	−.02	−.05	−.09	−.13
86	.18	.13	.07	.02	−.03	−.09	−.18
87	.17	.32	.65	.90	−.90	−.89	.74
88	~~1.00~~	~~1.00~~	~~1.00~~	~~1.00~~	~~1.00~~	~~1.00~~	~~1.00~~

(d) Fuselage and canopy

Orifice No. \ α	−4.0	0.1	4.1	8.2	12.3	14.3	16.3
1	0.66	0.37	0.03	−0.34	−0.80	−1.01	−1.20
2	.55	.34	.10	−.13	−.36	−.49	−.60
3	.24	.08	−.09	−.24	−.42	−.49	−.54
4	.09	−.05	−.19	−.32	−.46	−.51	−.55
5	.04	−.09	−.22	−.32	−.53	−.48	−.50
6	−.03	−.14	−.25	−.35	−.53	−.48	−.48
7	−.07	−.17	−.25	−.33	−.40	−.42	−.42
8	−.07	−.15	−.23	−.29	−.35	−.36	−.35
9	.56	.47	.40	.34	.27	.25	.24
10	.27	.20	.13	.08	.02	.00	−.02
11	.14	.06	−.03	−.10	−.16	−.19	−.21
12	−.04	−.13	−.22	−.30	−.37	−.40	−.42
13	−.50	−.60	−.70	−.78	−.86	−.89	−.90
14	−.68	−.77	−.85	−.91	−.96	−.98	−.99
15	−.57	−.63	−.70	−.73	−.76	−.77	−.76
16	−.42	−.47	−.50	−.53	−.55	−.56	−.55
17	−.40	−.43	−.46	−.48	−.49	−.49	−.48

Note: Lines have been drawn through doubtful data.

TABLE 3.– CONTINUED

(d) Fuselage and canopy (Concluded)

Orifice No. \ α	−4.0	0.1	4.1	8.2	12.3	14.3	16.3
18	~~1.00~~	~~1.00~~	~~1.00~~	~~1.00~~	~~1.00~~	~~1.00~~	~~1.00~~
19	−.01	−.08	−.15	−.20	−.26	−.29	−.29
20	−.57	−.60	−.63	−.63	−.67	−.66	−.64
21	−.73	−.74	−.77	−.77	−.77	−.77	−.73
22	−.58	−.60	−.63	−.63	−.66	−.65	−.65
23	−.43	−.46	−.50	−.52	−.55	−.57	−.57
24	−.30	−.33	−.37	−.41	−.44	−.45	−.47
25	−.25	−.30	−.34	−.37	−.40	−.42	−.44
26	−.08	−.07	−.06	−.05	−.06	−.07	−.08
39	.45	.46	.47	.47	.43	.42	.42
40	.11	.12	.10	.07	.01	−.01	−.01
41	.03	.05	.03	.01	−.06	−.09	−.10
42	−.04	−.03	−.04	−.08	−.15	−.18	−.19
43	−.11	−.10	−.12	−.16	−.23	−.26	−.27
44	−.48	−.43	−.43	−.47	−.55	−.58	−.62
45	−.24	−.22	−.24	−.29	−.38	−.41	−.41
46	−.17	−.18	−.24	−.32	−.45	−.50	−.51
47	−.01	−.13	−.32	−.53	−.80	−.91	−.94
48	−.12	−.31	−.55	−.77	−1.03	−1.12	−1.07
49	−.08	−.07	−.06	−.05	−.06	−.07	−.08
50	−.18	.14	.08	.01	−.09	−.13	−.15
51	−.06	.04	−.03	−.09	−.16	−.20	−.21
52	−.01	−.03	−.07	−.12	−.21	−.25	−.27
53	−.08	−.10	−.14	−.19	−.28	−.32	−.33
54	−.08	.07	−.06	−.05	−.06	−.07	−.08
55	.54	.41	.26	.10	.61	−.19	−.23
56	.23	.13	.02	−.10	−.25	−.30	−.34
57	.03	−.03	−.10	−.17	−.28	−.33	−.34
58	.03	−.02	−.09	−.17	−.28	−.33	−.35
59	−.07	−.11	−.18	−.26	−.27	−.41	−.42
60	−.15	−.18	−.25	−.33	−.43	−.48	−.49
61	.39	.50	.58	.65	.68	.68	.70
62	.05	.11	.16	.18	.17	.16	.18
63	.01	.06	.09	.10	.04	.05	.05
64	−.07	−.03	−.03	−.03	−.09	−.11	−.11
65	−.19	−.10	−.09	−.10	−.14	−.16	−.17
66	−.20	−.17	−.17	−.19	−.25	−.27	−.27

Note: A line has been drawn through doubtful data.

TABLE 3.– CONTINUED

(e) Fuselage duct

Orifice No. \ α	-4.0	0.1	4.1	8.2	12.3	14.3	16.3
100 T.[a]	0.93	0.95	0.97	0.97	0.97	0.97	0.97
101 T.	.95	.97	.98	.98	.98	.99	.99
102 T.	.99	1.00	.98	.97	.98	.99	.99
103 T.	1.00	1.00	1.00	1.00	1.00	1.00	1.00
104 T.	1.00	1.00	1.00	1.00	1.00	1.00	1.00
105 T.	.97	.97	.97	.97	.96	.97	.96
106 T.	.91	.93	.95	.95	.95	.95	.95
107 T.	.99	1.00	1.00	1.00	1.00	.95	1.00
108 T.	1.00	1.00	1.00	1.00	1.00	1.00	1.00
109 T.	1.00	1.00	1.00	1.00	1.00	1.00	1.00
110 T.	1.00	1.00	1.00	1.00	1.00	1.00	1.00
111 T.	.94	.94	.95	.94	.93	.94	.94
112 St.[b]	.89	.89	.89	.90	.89	.89	.88
113 T.	.66	.66	.67	.66	.66	.66	.65
114 T.	1.00	1.00	1.00	1.00	1.00	1.00	1.00
115 T.	1.00	1.00	1.00	1.00	1.00	1.00	1.00
116 T.	1.00	1.00	1.00	1.00	1.00	1.00	1.00
117 T.	1.00	1.00	1.00	1.00	1.00	1.00	1.00
118 T.	.93	.93	.95	.94	.94	.94	.94
119 T.	.97	.97	.97	.96	.95	.95	.94
120 T.	1.00	1.00	1.00	.98	.96	.95	.93
121 T.	1.00	1.00	1.00	1.00	1.00	.98	.94
122 T.	1.00	1.00	1.00	1.00	1.00	1.00	.99
123 T.	1.00	1.00	1.00	1.00	1.00	1.00	1.00
124 T.	.92	.92	.92	.91	.91	.90	.89
125 St.	.01	.02	.02	.03	.03	.03	.03
127 T.	1.00	.99	.99	.97	.94	.95	.95
128 T.	1.00	1.00	1.00	1.00	.97	.97	.96

[a]T. indicates total-pressure tube (ram-recovery ratio, $\frac{H_l-p_o}{H_o-p_o}$).

[b]St. indicates static-pressure tube (coefficient given as P).

TABLE 3.– CONCLUDED

(e) Fuselage duct (Concluded)

Orifice No. \ α	-4.0	0.1	4.1	8.2	12.3	14.3	16.3
129 T.[a]	1.00	1.00	1.00	1.00	1.00	1.00	1.00
130 T.	1.00	1.00	1.00	1.00	1.00	1.00	1.00
131 T.	.93	.92	.92	.91	.90	.89	.89
132 T.	.96	.96	.97	.97	.97	.97	.97
133 T.	1.00	1.00	1.00	.99	.98	.98	.98
134 T.	1.00	1.00	1.00	1.00	1.00	1.00	1.00
135 T.	1.00	1.00	1.00	1.00	1.00	1.00	1.00
136 T.	1.00	1.00	1.00	1.00	1.00	1.00	1.00
137 T.	~~.00~~	~~.01~~	~~.01~~	~~.02~~	~~.02~~	~~.03~~	~~.01~~
138 St.[b]	.89	.89	.90	.90	.89	.89	.88
139 T.	.93	.93	.94	.93	.93	.94	.94
140 T.	.99	.99	1.00	.99	.99	.99	.98
141 T.	.92	1.00	.94	.94	.93	.93	.93
142 T.	1.00	1.00	1.00	1.00	1.00	1.00	1.00
143 T.	1.00	1.00	1.00	1.00	1.00	1.00	1.00
144 T.	1.00	1.00	1.00	1.00	1.00	1.00	1.00
145 T.	.90	.91	.93	.93	.93	.93	.95
146 T.	.99	.96	.97	.97	.97	.98	.98
147 T.	1.00	1.00	1.00	1.00	1.00	1.00	1.00
148 T.	1.00	1.00	1.00	1.00	1.00	1.00	1.00
149 T.	1.00	1.00	1.00	1.00	1.00	1.00	1.00
150 T.	.95	.95	.96	.95	.94	.95	.94
151 St.	.88	.89	.89	.89	.88	.89	.88

[a]T. indicates total-pressure tube (ram-recovery ratio, $\frac{H_l - p_o}{H_o - p_o}$).

[b]St. indicates static-pressure tube (coefficient given as P).

Note: A line has been drawn through doubtful data.

TABLE 4.- PRESSURE COEFFICIENTS FOR THE AIRPLANE IN THE CLEAN CONDITION; ψ, 4°.

(a) Wing root

Orifice No. \ α	-4.0	0.1	4.1	8.2	12.3	14.3	16.3
27[a]	0.46	0.25	-0.58	-2.03	- - -	- - -	- - -
28[a]	.04	-.60	-1.50	-2.58	- - -	- - -	- - -
29	-.06	-.51	-1.04	-1.62	-2.37	-2.65	-2.58
30	-.22	-.52	-.86	-1.18	-1.57	-1.70	-1.58
31	-.27	-.50	-.74	-.96	-1.22	-1.29	-1.20
32	-.37	-.57	-.78	-.96	-1.15	-1.21	-1.18
33	-.39	-.54	-.70	-.82	-.96	-1.03	-1.06
34	-.43	-.55	-.67	-.76	-.86	-.94	-1.02
35	-.45	-.53	-.60	-.65	-.73	-.84	-.94
36	-.39	-.46	-.53	-.58	-.65	-.75	-.86
37	-.36	-.40	-.44	-.46	-.49	-.60	-.73
38	-.28	-.30	-.33	-.33	-.35	-.46	-.59

(b) Upper stabilizer root

Orifice No. \ α	-4.0	0.1	4.1	8.2	12.3	14.3	16.3
67	~~-0.04~~	~~-0.04~~	~~-0.04~~	~~-0.04~~	~~-0.04~~	~~-0.05~~	~~-0.06~~
68	.10	.12	.14	.15	.14	.13	.10
69	.00	.01	-.01	.00	.01	.01	.02
70	-.11	-.08	-.09	-.10	-.12	-.15	-.20
71	-.27	-.26	-.25	-.26	-.28	-.31	-.35
72	-.49	-.54	-.56	-.57	-.59	-.62	-.64
73	-.21	-.31	-.35	-.44	-.54	-.60	-.66
74	-.30	-.41	-.50	-.60	-.69	-.75	-.81
75	-.38	-.62	-.85	-1.05	-1.27	-1.38	-1.46
76	.00	.37	.52	.54	.44	.37	.29
77	~~-.04~~	~~.06~~	~~.16~~	~~.25~~	~~.34~~	~~.37~~	~~.40~~

[a]Peak negative pressures exceeded limit of manometers for $\alpha \geq 12°$.

Note: Lines have been drawn through doubtful data.

TABLE 4.– CONTINUED

(c) Lower stabilizer root

Orifice No. \ α	–4.0	0.1	4.1	8.2	12.3	14.3	16.3
78	0.08	0.11	0.11	0.11	0.12	0.10	0.06
79	.04	.04	.03	.01	–.01	–.03	–.05
80	–.04	–.04	–.08	–.11	–.12	–.13	–.16
81	–.02	–.02	–.05	–.07	–.09	–.12	–.15
82	–.03	–.04	–.09	–.11	–.14	–.16	–.20
83	~~–.37~~	~~–.38~~	~~–.38~~	~~–.38~~	~~–.38~~	~~–.39~~	~~–.41~~
84	~~–.36~~	~~–.36~~	~~–.37~~	~~–.36~~	~~–.36~~	~~–.37~~	~~–.39~~
85	.08	.02	–.02	–.04	–.06	–.09	–.18
86	.12	.05	.01	–.03	–.05	–.11	–.26
87	.30	.65	.85	.80	.73	.72	.57
88	~~1.00~~	~~1.00~~	~~1.00~~	~~1.00~~	~~1.00~~	~~1.00~~	~~1.00~~

(d) Fuselage and canopy

Orifice No. \ α	–4.0	0.1	4.1	8.2	12.3	14.3	16.3
1	0.55	0.27	–0.07	–0.46	–0.96	–1.16	–1.28
2	.46	.26	.03	–.17	–.42	–.56	–.64
3	.19	.04	–.12	–.26	–.43	–.51	–.55
4	.04	–.08	–.21	–.34	–.47	–.52	–.55
5	–.01	–.13	–.25	–.34	–.45	–.48	–.50
6	–.06	–.17	–.27	–.36	–.45	–.48	–.49
7	–.11	–.19	–.27	–.34	–.41	–.42	–.42
8	–.11	–.18	–.26	–.31	–.36	–.37	–.37
9	.53	.47	.40	.32	.22	.18	.16
10	.25	.18	.11	.05	.00	–.02	–.03
11	.12	.04	–.04	–.11	–.19	–.21	–.23
12	–.05	–.15	–.25	–.32	–.40	–.43	–.45
13	–.50	–.61	–.73	–.80	–.89	–.91	–.94
14	–.70	–.80	–.88	–.94	–1.00	–1.02	–1.04
15	–.59	–.66	–.73	–.75	–.79	–.80	–.80
16	–.45	–.49	–.54	–.56	–.58	–.59	–.59
17	–.43	–.48	–.50	–.51	–.51	–.53	–.52
18	~~.98~~	~~1.00~~	~~1.00~~	~~1.00~~	~~1.00~~	~~1.00~~	~~1.00~~
19	– – –	–.25	–.32	–.36	–.42	–.43	–.42
20	–.84	–.86	–.88	–.88	–.89	–.88	–.84
21	–.94	–.94	–.96	–.95	–.95	–.93	–.90
22	–.72	–.73	–.75	–.75	–.75	–.75	–.74

Note: Lines have been drawn through doubtful data.

TABLE 4.– CONTINUED

(d) Fuselage and canopy (Concluded)

Orifice No. \ α	-4.0	0.1	4.1	8.2	12.3	14.3	16.3
23	-0.50	-0.52	-0.55	-0.56	-0.58	-0.60	-0.60
24	-.33	-.36	-.40	-.41	-.44	-.46	-.47
25	-.25	-.28	-.32	-.33	-.36	-.38	-.41
26	-.08	-.07	-.06	-.05	-.07	-.08	-.11
39	.12	.17	.17	.18	.14	.15	.14
40	-.11	-.08	-.10	-.12	-.19	-.20	-.21
41	-.11	-.10	-.12	-.15	-.21	-.23	-.23
42	-.17	-.15	-.18	-.21	-.28	-.30	-.32
43	-.23	-.22	-.25	-.28	-.35	-.37	-.39
44	-.58	-.54	-.57	-.59	-.67	-.70	-.71
45	-.32	-.32	-.35	-.39	-.48	-.50	-.50
46	-.23	-.25	-.32	-.39	-.53	-.58	-.58
47	-.07	-.20	-.40	-.60	-.89	-1.00	-.98
48	-.18	-.39	-.63	-.85	-1.11	-1.19	-1.09
49	-.08	-.07	-.07	-.06	-.07	-.08	-.11
50	-.02	-.06	-.12	-.18	-.27	-.31	-.33
51	-.10	-.11	-.16	-.23	-.30	-.33	-.35
52	-.14	-.16	-.20	-.25	-.34	-.37	-.38
53	-.20	-.22	-.27	-.31	-.39	-.42	-.43
54	-.08	-.07	-.07	-.06	-.07	-.08	-.11
55	.28	.15	-.02	-.18	-.41	-.48	-.52
56	-.04	-.05	-.16	-.27	-.42	-.47	-.50
57	-.12	-.17	-.23	-.30	-.41	-.44	-.46
58	-.10	-.14	-.20	-.28	-.38	-.42	-.44
59	-.19	-.23	-.30	-.36	-.46	-.49	-.51
60	-.26	-.29	-.35	-.42	-.51	-.54	-.56
61	-.10	.23	.33	.41	.46	.49	.48
62	-.15	-.08	-.05	-.02	-.04	-.03	-.04
63	-.13	-.08	-.06	-.06	-.10	-.10	-.11
64	-.19	-.17	-.17	-.18	-.23	-.25	-.23
65	-.25	-.22	-.22	-.23	-.27	-.29	-.31
66	-.30	-.28	-.29	-.32	-.38	-.40	-.40

TABLE 4.– CONTINUED

(e) Fuselage duct

Orifice No. \ α	−4.0	0.1	4.1	8.2	12.3	14.3	16.3
100 T.[a]	0.92	0.93	0.94	0.94	0.95	0.94	0.93
101 T.	.96	.96	.97	.96	.96	.96	.94
102 T.	.96	.96	.97	.98	.99	.98	.97
103 T.	1.00	1.00	1.00	1.00	1.00	1.00	.99
104 T.	1.00	1.00	1.00	1.00	1.00	1.00	.99
105 T.	.96	.96	.96	.96	.96	.96	.95
106 T.	.90	.92	.93	.94	.95	.94	.93
107 T.	.98	.99	.99	1.00	1.00	1.00	.99
108 T.	1.00	1.00	1.00	1.00	1.00	1.00	.99
109 T.	1.00	1.00	1.00	1.00	1.00	1.00	.99
110 T.	1.00	1.00	1.00	1.00	1.00	1.00	.99
111 T.	.93	.94	.94	.94	.93	.93	.91
112 St.[b]	.89	.89	.89	.89	.89	.88	.85
113 T.	.66	.66	.66	.65	.66	.65	.62
114 T.	.99	.99	.99	.99	1.00	1.00	.97
115 T.	1.00	1.00	1.00	1.00	1.00	1.00	.98
116 T.	1.00	1.00	1.00	1.00	1.00	1.00	.98
117 T.	1.00	1.00	1.00	1.00	1.00	1.00	.98
118 T.	.93	.92	.93	.93	.93	.93	.90
119 T.	.96	.96	.95	.95	.95	.94	.87
120 T.	1.00	1.00	.99	.98	.94	.93	.87
121 T.	1.00	1.00	1.00	1.00	.96	.92	.87
122 T.	1.00	1.00	1.00	1.00	1.00	.96	.88
123 T.	1.00	1.00	1.00	1.00	1.00	1.00	.91
124 T.	.91	.91	.90	.90	.90	.90	.88
125 St.	.01	.01	.02	.02	.03	.03	.01
127 T.	1.00	.99	.98	.97	.96	.96	.94
128 T.	1.00	1.00	1.00	1.00	.98	.98	.95
129 T.	1.00	1.00	1.00	1.00	1.00	1.00	.98
130 T.	1.00	1.00	1.00	1.00	1.00	1.00	.98
131 T.	.94	.92	.91	.90	.90	.88	.86
132 T.	.97	.96	.96	.96	.97	.97	.96
133 T.	1.00	.99	.99	.99	.99	.99	.96
134 T.	1.00	1.00	1.00	1.00	1.00	1.00	.98
135 T.	1.00	1.00	1.00	1.00	1.00	1.00	.98
136 T.	1.00	1.00	1.00	1.00	1.00	1.00	.98
137 T.	~~.00~~	~~.01~~	~~.01~~	~~.01~~	~~.02~~	~~.02~~	~~.00~~

[a]T. indicates total-pressure tube (ram-recovery ratio, $\frac{H_l - p_o}{H_o - p_o}$).

[b]St. indicates static-pressure tube (coefficient given as P).

Note: A line has been drawn through doubtful data.

TABLE 4.– CONCLUDED

(e) Fuselage duct (Concluded)

Orifice No. \ α	–4.0	0.1	4.1	8.2	12.3	14.3	16.3
138 St.[b]	0.89	0.89	0.89	0.89	0.89	0.88	0.85
139 T.[a]	.93	.94	.93	.95	.95	.94	.92
140 T.	.99	.99	.99	1.00	1.00	1.00	.98
141 T.	.92	.93	.93	.93	.93	.93	.91
142 T.	1.00	1.00	1.00	1.00	1.00	1.00	.99
143 T.	1.00	1.00	1.00	1.00	1.00	1.00	.99
144 T.	1.00	1.00	1.00	1.00	1.00	1.00	.99
145 T.	.90	.92	.92	.93	.93	.93	.91
146 T.	.95	.96	.96	.97	.98	.98	.96
147 T.	.99	.99	.99	.99	1.00	1.00	.99
148 T.	1.00	1.00	1.00	.99	1.00	1.00	.99
149 T.	1.00	1.00	1.00	.99	1.00	1.00	.99
150 T.	.94	.95	.95	.95	.95	.95	.93
151 St.	.88	.88	.88	.89	.88	.88	.85

[a]T. Indicates total-pressure tube (ram-recovery ratio, $\frac{H_l - p_o}{H_o - p_o}$).

[b]St. Indicates static-pressure tube (coefficient given as P).

TABLE 5.– PRESSURE COEFFICIENTS FOR THE AIRPLANE IN THE CLEAN CONDITION; ψ, 8°

(a) Wing root

Orifice No. \ α	–4.0	0.1	4.1	8.2	12.3	14.3	16.3
27[a]	0.43	0.06	–1.02	–2.80	– – –	– – –	– – –
28[a]	–.12	–.83	–1.82	–3.04	– – –	– – –	– – –
29	–.18	–.65	–1.21	–1.88	–2.50	–2.71	–2.53
30	–.31	–.62	–.96	–1.33	–1.65	–1.73	–2.38
31	–.34	–.57	–.81	–1.06	–1.27	–1.29	–1.14
32	–.42	–.63	–.82	–1.04	–1.20	–1.24	–1.24
33	–.43	–.59	–.73	–.88	–.99	–1.08	–1.14
34	–.47	–.59	–.68	–.80	–.88	–.99	–1.06
35	–.48	–.55	–.60	–.68	–.74	–.89	–.93
36	–.42	–.49	–.54	–.61	–.65	–.80	–.86
37	–.37	–.42	–.44	–.47	–.50	–.63	–.70
38	–.29	–.32	–.32	–.35	–.37	–.48	–.60

(b) Upper stabilizer root

Orifice No. \ α	–4.0	0.1	4.1	8.2	12.3	14.3	16.3
67	–0.04	–0.04	–0.04	–0.04	–0.03	–0.04	–0.04
68	.07	.12	.17	–.08	.06	.01	.01
69	.02	.00	–.03	–.06	–.05	–.09	–.10
70	–.10	–.10	–.12	–.15	–.14	–.19	–.20
71	–.31	–.30	–.32	–.35	–.34	–.37	–.38
72	–.65	–.68	–.67	–.71	–.71	–.77	–.78
73	–.41	–.49	–.61	–.72	–.73	–.80	–.82
74	–.52	–.63	–.74	–.87	–.89	–1.01	–1.04
75	–.81	–1.11	–1.35	–.64	–1.72	–1.97	–2.03
76	.39	.49	.44	.26	.19	–.07	–.93
77	–.15	–.06	.02	.12	.18	.27	.33

[a]Peak negative pressures exceeded limit of manometers for $\alpha \geqq 12°$.

Note: Lines have been drawn through doubtful data.

TABLE 5.– CONTINUED

(c) Lower stabilizer root

Orifice No. \ α	−4.0	0.1	4.1	8.2	12.3	14.3	16.3
78	0.11	0.12	0.13	0.12	0.12	0.10	0.07
79	.04	.04	.04	.01	.02	−.01	−.03
80	−.04	−.05	−.07	−.10	−.10	−.11	−.11
81	−.02	−.03	−.04	−.07	−.07	−.09	−.11
82	−.04	−.06	−.08	−.12	−.12	−.13	−.17
83	~~−.37~~	~~−.36~~	~~−.36~~	~~−.37~~	~~−.36~~	~~−.37~~	~~−.37~~
84	~~−.35~~	~~−.35~~	~~−.34~~	~~−.35~~	~~−.34~~	~~−.36~~	~~−.35~~
85	.04	.00	−.02	−.05	−.05	−.12	−.19
86	.08	.04	.02	−.01	−.01	−.13	−.31
87	.50	.70	.68	.64	.65	.66	.39
88	~~1.00~~	~~1.00~~	~~1.00~~	~~1.00~~	~~1.00~~	~~1.00~~	~~1.00~~

(d) Fuselage and canopy

Orifice No. \ α	−4.0	0.1	4.1	8.2	12.3	14.3	16.3
1	0.45	0.14	−0.20	−0.64	−1.03	−1.23	−1.44
2	.38	.17	−.06	−.29	−.51	−.63	−.74
3	.12	−.02	−.17	−.34	−.45	−.51	−.58
4	.00	−.13	−.26	−.41	−.50	−.53	−.58
5	−.09	−.20	−.30	−.41	−.48	−.50	−.53
6	−.12	−.23	−.32	−.42	−.49	−.50	−.52
7	−.18	−.26	−.32	−.40	−.44	−.45	−.45
8	−.18	−.25	−.30	−.37	−.40	−.40	−.40
9	.48	.41	.34	.26	.19	.17	.14
10	.17	.10	.03	−.04	−.09	−.10	−.11
11	.03	−.05	−.13	−.22	−.27	−.29	−.32
12	−.14	−.24	−.32	−.42	−.48	−.50	−.52
13	−.58	−.70	−.78	−.89	−.95	−.96	−1.00
14	−.80	−.89	−.96	−1.05	−1.08	−1.09	−1.11
15	−.68	−.75	−.79	−.86	−.87	−.87	−.87

Note: Lines have been drawn through doubtful data.

TABLE 5.– CONTINUED

(d) Fuselage and canopy (Concluded)

Orifice No. \ α	−4.0	0.1	4.1	8.2	12.3	14.3	16.3
16	−0.55	−0.60	−0.62	−0.67	−0.68	−0.67	−0.68
17	−.54	−.57	−.60	−.64	−.63	−.62	−.62
18	.96	.98	.99	.99	1.00	.99	1.00
19	−.42	−.48	−.52	−.59	−.61	−.61	−.60
20	−1.15	−1.15	−1.14	−1.17	−1.13	−1.10	−1.05
21	−1.15	−1.15	−1.14	−1.15	−1.12	−1.08	−1.05
22	−.86	−.87	−.85	−.87	−.85	−.83	−.82
23	−.57	−.58	−.59	−.62	−.62	−.62	−.62
24	−.39	−.41	−.42	−.45	−.45	−.46	−.47
25	−.27	−.29	−.31	−.34	−.34	−.35	−.37
26	−.08	−.07	−.06	−.07	−.07	−.09	−.12
39	−.20	−.18	−.16	−.18	−.16	−.14	−.17
40	−.31	−.28	−.29	−.35	−.38	−.38	−.40
41	−.26	−.26	−.25	−.32	−.35	−.37	−.40
42	−.29	−.28	−.30	−.35	−.40	−.41	−.43
43	−.34	−.34	−.35	−.42	−.45	−.47	−.53
44	−.68	−.65	−.66	−.73	−.78	−.79	−.80
45	−.42	−.41	−.43	−.50	−.56	−.57	−.59
46	−.28	−.31	−.37	−.49	−.58	−.62	−.62
47	−.13	−.27	−.46	−.72	−.95	−1.03	−.99
48	−.25	−.46	−.69	−.96	−1.16	−1.20	−1.05
49	−.08	−.07	−.06	−.07	−.07	−.09	−.12
50	−.22	−.26	−.30	−.39	−.44	−.46	−.49
51	−.26	−.27	−.31	−.38	−.42	−.44	−.48
52	−.27	−.29	−.32	−.39	−.43	−.46	−.48
53	−.33	−.34	−.36	−.43	−.48	−.50	−.51
54	−.08	−.07	−.06	−.07	−.07	−.09	−.12
55	−.01	−.16	−.32	−.56	−.71	−.77	−.86
56	−.16	−.25	−.34	−.49	−.57	−.60	−.65
57	−.27	−.31	−.36	−.45	−.51	−.53	−.57
58	−.23	−.27	−.32	−.41	−.47	−.50	−.52
59	−.32	−.35	−.39	−.48	−.54	−.56	−.58
60	−.38	−.40	−.44	−.52	−.58	−.59	−.61
61	−.22	−.08	.06	.13	.21	.26	.24
62	−.34	−.28	−.22	−.24	−.23	−.21	−.23
63	−.27	−.23	−.21	−.23	−.25	−.25	−.26
64	−.32	−.30	−.29	−.34	−.36	−.37	−.40
65	−.36	−.34	−.33	−.37	−.40	−.41	−.42
66	−.40	−.39	−.39	−.44	−.49	−.50	−.50

Note: A line has been drawn through doubtful data.

TABLE 5.– CONTINUED

(e) Fuselage duct

Orifice No. \ α	−4.0	0.1	4.1	8.2	12.3	14.3	16.3
100 T.[a]	0.91	0.93	0.92	0.93	0.91	0.89	0.88
101 T.	.95	.97	.95	.94	.93	.89	.90
102 T.	.96	.98	.99	.99	.97	.96	.97
103 T.	1.00	1.00	1.00	1.00	.99	.99	1.00
104 T.	1.00	1.00	1.00	1.00	1.00	.98	.93
105 T.	.96	.97	.96	.96	.95	.89	.93
106 T.	.90	.91	.92	.94	.92	.86	.86
107 T.	.97	.99	.99	1.00	1.00	.95	.97
108 T.	1.00	1.00	1.00	1.00	1.00	.93	.99
109 T.	1.00	1.00	1.00	1.00	1.00	.87	.97
110 T.	1.00	1.00	1.00	1.00	1.00	.81	.92
111 T.	.94	.94	.93	.93	.91	.74	.80
112 St.[b]	.89	.89	.89	.88	.86	.63	.59
113 T.	.65	.65	.64	.65	.63	.46	.46
114 T.	.99	.99	.98	1.00	.97	.71	.72
115 T.	1.00	1.00	1.00	1.00	.98	.71	.73
116 T.	1.00	1.00	1.00	1.00	.98	.69	.70
117 T.	1.00	1.00	1.00	1.00	.98	.69	.68
118 T.	.91	.93	.92	.93	.90	.67	.64
119 T.	.95	.95	.95	.96	.88	.66	.60
120 T.	.99	.99	.97	.96	.88	.66	.59
121 T.	1.00	1.00	1.00	.97	.87	.66	.59
122 T.	1.00	1.00	1.00	1.00	.88	.65	.57
123 T.	1.00	1.00	1.00	1.00	.89	.64	.57
124 T.	.90	.90	.90	.89	.89	.64	.56
125 St.	.01	.01	.02	.01	.02	.02	.02
127 T.	1.00	1.00	.99	.99	.96	.69	.61
128 T.	1.00	1.00	.99	1.00	.98	.67	.59
129 T.	1.00	1.00	.99	1.00	.98	.66	.58
130 T.	1.00	1.00	.99	1.00	.97	.65	.57
131 T.	.94	.93	.90	.89	.88	.65	.57
132 T.	.97	.97	.97	.97	.96	.88	.69
133 T.	1.00	1.00	.99	1.00	.99	.89	.68
134 T.	1.00	1.00	.99	1.00	1.00	.88	.64
135 T.	1.00	1.00	.99	1.00	1.00	.84	.61
136 T.	1.00	1.00	.99	1.00	1.00	.80	.60
137 T.	.00	.01	.01	.01	.02	.02	.01

[a]T. indicates total-pressure tube (ram-recovery ratio, $\frac{H_l - p_o}{H_o - p_o}$).
[b]St. indicates static-pressure tube (coefficient given as P).
Note: A line has been drawn through doubtful data.

TABLE 5.- CONCLUDED

(e) Fuselage duct (Concluded)

Orifice No. \ α	-4.0	0.1	4.1	8.2	12.3	14.3	16.3
138 St.[b]	0.89	0.89	0.89	0.88	0.86	0.68	0.58
139 T.[a]	.95	.95	.94	.95	.94	.91	.89
140 T.	1.00	1.00	.99	1.00	1.00	.98	.96
141 T.	.93	.94	.93	.94	.93	.86	.74
142 T.	1.00	1.00	.99	1.00	1.00	.98	.92
143 T.	1.00	1.00	.99	1.00	1.00	.96	.86
144 T.	1.00	1.00	.99	1.00	1.00	.98	.97
145 T.	.91	.93	.92	.94	.93	.87	.86
146 T.	.96	.97	.96	.98	.97	.96	.97
147 T.	1.00	1.00	.99	1.00	1.00	.99	1.00
148 T.	1.00	1.00	.99	1.00	1.00	.99	1.00
149 T.	1.00	1.00	.99	1.00	1.00	.99	1.00
150 T.	.95	.95	.94	.95	.94	.92	.91
151 St.	.88	.89	.88	.87	.86	.70	.66

[a]T. indicates total-pressure tube (ram-recovery ratio, $\frac{H_l - p_o}{H_o - p_o}$).

[b]St. indicates static-pressure tube (coefficient given as P).

TABLE 6.– PRESSURE COEFFICIENTS FOR THE AIRPLANE IN THE CLEAN CONDITION; α, 0.1°

(a) Wing root

Orifice No. \ ψ	−12	−8	−6	−4	−2	0	2	4	6	8	12
27	0.60	0.57	0.57	0.51	0.47	0.41	0.33	0.24	– –	0.06	−0.20
28	.26	.05	−.06	−.20	−.29	−.41	−.51	−.64	– –	−.83	−.20
29	.13	−.04	−.12	−.24	−.30	−.37	−.45	−.54	– –	−.66	−.80
30	−.05	−.19	−.26	−.34	−.39	−.43	−.49	−.54	– –	−.62	−.71
31	−.14	−.25	−.29	−.35	−.40	−.43	−.47	−.52	– –	−.57	−.62
32	−.23	−.34	−.38	−.44	−.48	−.51	−.54	−.59	– –	−.63	−.67
33	−.28	−.36	−.40	−.44	−.48	−.50	−.52	−.56	– –	−.59	−.61
34	−.32	−.40	−.42	−.47	−.50	−.51	−.53	−.56	– –	−.59	−.60
35	−.33	−.41	−.42	−.47	−.49	−.50	−.42	−.54	– –	−.55	−.54
36	−.29	−.34	−.37	−.41	−.42	−.43	−.45	−.47	– –	−.49	−.49
37	−.26	−.32	−.34	−.45	−.38	−.38	−.39	−.41	– –	−.42	−.40
38	−.21	−.24	−.26	−.28	−.29	−.29	−.29	−.31	– –	−.31	−.31

(b) Upper stabilizer root

Orifice No. \ ψ	−12	−8	−6	−4	−2	0	2	4	6	8	12
67	~~−0.00~~	~~−0.00~~	~~−0.01~~	~~−0.01~~	~~−0.01~~	~~−0.02~~	~~−0.11~~	~~−0.11~~	~~−0.11~~	~~−0.10~~	~~−0.10~~
68	−.13	−.08	−.06	−.04	.03	.07	.11	.12	.11	.12	.21
69	−.34	−.27	−.24	−.20	−.15	−.05	−.02	.00	.03	.01	−.04
70	−.27	−.19	−.19	−.19	−.16	−.13	−.12	−.09	−.09	−.11	−.12
71	−.23	−.20	−.24	−.27	−.28	−.27	−.29	−.28	−.27	−.30	−.32
72	−.19	−.24	−.29	−.37	−.40	−.46	−.52	−.55	−.57	−.62	−.68
73	.21	.17	.11	.03	−.05	−.18	−.25	−.33	−.42	−.47	−.68
74	.22	.08	−.02	−.07	−.30	−.51	−.63	−.76	−.87	−.62	−.83
75	.39	.27	.19	.09	−.06	−.26	−.44	−.65	−.89	−1.13	−1.58
76	−2.32	−1.24	−1.31	−.88	−.29	−.17	.11	.37	.45	.48	.32
77	~~−.26~~	~~−.12~~	~~−.03~~	~~.05~~	~~.09~~	~~.12~~	~~.16~~	~~.06~~	~~.01~~	~~−.05~~	~~−.24~~

Note: Lines have been drawn through doubtful data.

TABLE 6.– CONTINUED

(c) Lower stabilizer root

Orifice No. \ ψ	–12	–8	–6	–4	–2	0	2	4	6	8	12
78	0.03	0.04	0.04	0.05	0.08	0.07	0.08	0.11	0.12	0.13	0.11
79	–.02	–.02	–.01	.01	03	.03	.03	.04	.04	.04	.02
80	–.08	–.07	–.07	–.06	–.05	–.06	–.05	–.04	–.05	–.05	–.07
81	.00	–.03	–.03	–.03	–.03	–.03	–.03	–.02	–.02	–.03	–.04
82	.02	–.02	–.02	–.03	–.04	–.04	–.04	–.04	–.05	–.06	–.08
83	~~–.32~~	~~–.32~~	~~–.33~~	~~–.33~~	~~–.33~~	~~–.34~~	~~–.43~~	~~–.43~~	~~–.42~~	~~–.43~~	~~–.42~~
84	~~–.30~~	~~–.30~~	~~–.31~~	~~–.32~~	~~–.32~~	~~–.32~~	~~–.41~~	~~–.41~~	~~–.40~~	~~–.40~~	~~–.40~~
85	.28	.19	.17	.13	.11	.08	.07	.04	.04	.03	.03
86	.36	.27	.23	.19	.17	.13	.09	.06	.04	.04	.05
87	–.57	–.22	–.11	.08	.26	.32	.46	.66	.74	.71	.69
88	~~1.00~~	~~1.00~~	~~1.00~~	~~1.00~~	~~1.00~~	~~1.00~~	~~1.00~~	~~1.00~~	~~1.00~~	~~1.00~~	~~1.00~~

(d) Fuselage and canopy

Orifice No. \ ψ	–12	–8	–6	–4	–2	0	2	4	6	8	12
1	0.59	0.53	0.50	0.46	0.42	0.37	0.33	0.27	– –	0.14	0.00
2	.45	.43	.42	.39	.37	.34	.30	.26	– –	.17	.05
3	.06	.09	.10	.10	.09	.08	.07	.04	– –	–.02	–.10
4	–.09	–.06	–.04	–.05	–.04	–.05	–.06	–.08	– –	–.13	–.21
5	–.13	–.10	–.08	–.08	–.08	–.09	–.11	–.13	– –	–.21	–.30
6	–.22	–.17	–.14	–.14	–.13	–.14	–.15	–.17	– –	–.23	–.31
7	–.27	–.20	–.19	–.17	–.17	–.17	–.17	–.20	– –	–.26	–.35
8	–.25	–.19	–.16	–.16	–.15	–.14	–.16	–.19	– –	–.25	–.33
9	–.23	.35	.39	.42	–.44	.48	.48	.47	– –	.41	.29
10	–.06	.08	.13	.16	.19	.20	.19	.18	– –	.10	–.03
11	–.23	–.08	–.02	.01	.04	.06	.06	.04	– –	–.05	–.20
12	–.42	–.27	–.20	–.17	–.15	–.12	–.13	–.15	– –	–.24	–.37
13	–.87	–.74	–.68	–.65	–.62	–.60	–.60	–.62	– –	–.70	–.82
14	–1.00	–.89	–.84	–.81	–.79	–.77	–.77	–.80	– –	–.89	–1.03
15	–.90	–.76	–.71	–.67	–.65	–.64	–.64	–.67	– –	–.75	–.88
16	–.78	–.61	–.55	–.51	–.49	–.47	–.47	–.51	– –	–.60	–.75
17	–.79	–.60	–.53	–.49	–.46	–.43	–.43	–.47	– –	–.58	–.75
18	~~–.18~~	~~.99~~	~~1.00~~	~~.99~~	~~1.00~~	~~1.00~~	~~1.00~~	~~1.00~~	~~– –~~	~~.98~~	~~–.95~~
19	.05	.07	.06	.03	–.03	–.08	–.16	–.25	– –	–.47	–.74
20	–.07	–.20	–.28	–.38	–.49	–.60	–.73	–.88	– –	–1.16	–1.47

Note: Lines have been drawn through doubtful data.

TABLE 6.– CONTINUED

(d) Fuselage and canopy (Concluded)

Orifice No. \ ψ	−12	−8	−6	−4	−2	0	2	4	6	8	12
21	−0.28	−0.41	−0.48	−0.57	−0.65	−0.74	−0.85	−0.96	– –	−1.17	−1.38
22	−.29	−.38	−.43	−.49	−.55	−.60	−.66	−.74	– –	−.87	−.97
23	−.33	−.37	−.39	−.42	−.44	−.47	−.50	−.54	– –	−.59	−.63
24	−.29	−.30	−.30	−.32	−.33	−.34	−.35	−.37	– –	−.41	−.45
25	−.39	−.35	−.34	−.33	−.31	−.29	−.28	−.29	– –	−.29	−.30
26	−.09	−.08	−.07	−.08	−.08	−.06	−.10	−.10	– –	−.09	−.09
39	.87	.87	.80	.69	.58	.46	.31	.15	– –	−.17	−.57
40	.62	.48	.39	.29	.20	.21	.02	−.08	– –	−.28	−.49
41	.47	.34	.27	.19	.12	.05	−.03	−.11	– –	−.25	−.40
42	.37	.24	.18	.11	.04	−.03	−.09	−.16	– –	−.29	−.40
43	.28	.15	.09	.02	−.04	−.10	−.16	−.22	– –	−.34	−.45
44	−.04	−.17	−.23	−.30	−.36	−.42	−.48	−.54	– –	−.64	−.74
45	.10	−.01	−.06	−.12	−.18	−.22	−.27	−.33	– –	−.41	−.48
46	.05	−.02	−.07	−.12	−.15	−.19	−.21	−.26	– –	−.31	−.36
47	.13	.04	−.01	−.07	−.11	−.14	−.18	−.22	– –	−.28	−.33
48	−.03	−.14	−.19	−.25	−.29	−.33	−.36	−.41	– –	−.46	−.52
49	−.09	−.08	−.07	−.08	−.08	−.06	−.09	−.10	– –	−.09	−.09
50	.63	.48	.40	.31	.22	.13	.04	−.07	– –	−.25	−.46
51	.46	.33	.26	.17	.11	.04	−.04	−.13	– –	−.27	−.42
52	.37	.24	.17	.10	.04	−.03	−.09	−.17	– –	−.29	−.41
53	.28	.15	.09	.02	−.04	−.10	−.16	−.22	– –	−.33	−.44
54	−.09	−.08	−.07	−.08	−.08	−.06	−.10	−.10	– –	−.10	−.09
55	.92	.80	.72	.62	.52	.41	.27	.13	– –	−.14	−.50
56	.60	.45	.38	.29	.21	.12	.04	−.06	– –	−.24	−.44
57	.38	.25	.19	.11	.04	−.03	−.10	−.17	– –	−.31	−.45
58	.35	.23	.17	.10	.04	−.02	−.08	−.15	– –	−.27	−.38
59	.25	.12	.07	.00	−.06	−.12	−.18	−.24	– –	−.35	−.46
60	.15	.04	−.02	−.09	−.14	−.19	−.24	−.30	– –	−.40	−.49
61	.95	.86	.79	.70	.60	.50	.36	.22	– –	−.06	−.43
62	.60	.45	.38	.29	.19	.12	.02	−.09	– –	−.28	−.48
63	.45	.33	.27	.19	.12	.06	−.01	−.09	– –	−.22	−.37
64	.34	.21	.16	.09	.02	−.04	−.10	−.17	– –	−.29	−.42
65	.26	.14	.08	.02	−.04	−.10	−.16	−.22	– –	−.34	−.45
66	.16	.05	.00	−.06	−.12	−.17	−.23	−.29	– –	−.38	−.47

TABLE 6.– CONTINUED

(e) Fuselage duct

Orifice No. \ ψ	-12	-8	-6	-4	-2	0	2	4	6	8	12
100 T.[a]	0.93	0.96	0.97	0.97	0.96	0.96	0.95	0.94	0.93	0.93	0.91
101 T.	.97	.99	.98	.97	.97	.97	.97	.97	.97	.97	.94
102 T.	.98	.99	1.00	1.00	1.00	1.00	.99	.96	.96	.98	1.00
103 T.	1.00	1.00	1.00	1.00	1.00	1.00	1.00	1.00	1.00	1.00	1.00
104 T.	1.00	1.00	1.00	1.00	1.00	1.00	1.00	1.00	1.00	1.00	1.00
105 T.	.97	.97	.97	.97	.97	.97	.97	.97	.96	.96	.96
106 T.	.94	.93	.93	.93	.93	.93	.93	.93	.91	.91	.90
107 T.	1.00	1.00	1.00	1.00	1.00	1.00	1.00	1.00	.99	.99	.96
108 T.	1.00	1.00	1.00	1.00	1.00	1.00	1.00	1.00	1.00	1.00	1.00
109 T.	1.00	1.00	1.00	1.00	1.00	1.00	1.00	1.00	1.00	1.00	1.00
110 T.	1.00	1.00	1.00	1.00	1.00	1.00	1.00	1.00	1.00	1.00	1.00
111 T.	.92	.94	.94	.94	.94	.94	.94	.94	.94	.94	.93
112 St.[b]	.88	.89	.89	.89	.89	.89	.89	.89	.89	.88	.88
113 T.	.67	.67	.67	.67	.67	.67	.65	.65	.65	.65	.64
114 T.	1.00	1.00	1.00	1.00	1.00	1.00	1.00	1.00	.99	.99	.96
115 T.	1.00	1.00	1.00	1.00	1.00	1.00	1.00	1.00	1.00	1.00	.99
116 T.	1.00	1.00	1.00	1.00	1.00	1.00	1.00	1.00	1.00	1.00	1.00
117 T.	1.00	1.00	1.00	1.00	1.00	1.00	1.00	1.00	1.00	1.00	1.00
118 T.	.94	.95	.94	.94	.94	.93	.93	.93	.92	.92	.91
119 T.	.97	.97	.97	.97	.97	.97	.96	.96	.95	.95	.95
120 T.	1.00	1.00	1.00	1.00	1.00	1.00	1.00	1.00	.99	.99	.96
121 T.	1.00	1.00	1.00	1.00	1.00	1.00	1.00	1.00	1.00	1.00	1.00
122 T.	1.00	1.00	1.00	1.00	1.00	1.00	1.00	1.00	1.00	1.00	1.00
123 T.	1.00	1.00	1.00	1.00	1.00	1.00	1.00	1.00	1.00	1.00	1.00
124 T.	.94	.94	.93	.93	.93	.92	.92	.91	.90	.90	.89
125 St.	.03	– –	.01	.01	.01	.01	.01	.01	.01	.01	– –
127 T.	.98	.98	.99	.99	.99	.99	.99	1.00	1.00	1.00	1.00
128 T.	1.00	1.00	1.00	1.00	1.00	1.00	1.00	1.00	1.00	1.00	1.00
129 T.	1.00	1.00	1.00	1.00	1.00	1.00	1.00	1.00	1.00	1.00	1.00
130 T.	1.00	1.00	1.00	1.00	1.00	1.00	1.00	1.00	1.00	1.00	1.00
131 T.	.92	.93	.93	.92	.92	.92	.93	.93	.92	.92	.92
132 T.	.96	.96	.95	.96	.96	.96	.96	.96	.96	.97	.97
133 T.	.98	.98	.99	.99	.99	1.00	1.00	1.00	1.00	1.00	1.00
134 T.	1.00	1.00	1.00	1.00	1.00	1.00	1.00	1.00	1.00	1.00	1.00
135 T.	1.00	1.00	1.00	1.00	1.00	1.00	1.00	1.00	1.00	1.00	1.00
136 T.	1.00	1.00	1.00	1.00	1.00	1.00	1.00	1.00	1.00	1.00	1.00

[a]T. indicates total-pressure tube (ram-recovery ratio, $\frac{H_l - p_o}{H_o - p_o}$).

[b]St. indicates static-pressure tube (coefficient given as P).

Note: A line has been drawn through doubtful data.

TABLE 6.– CONCLUDED

(e) Fuselage duct (Concluded)

Orifice No. \ ψ	-12	-8	-6	-4	-2	0	2	4	6	8	12
137 T.[a]	~~0.01~~	~~0.00~~	~~0.01~~	~~0.01~~	~~0.00~~	~~0.00~~	~~0.00~~	~~0.00~~	~~0.00~~	~~0.00~~	~~0.00~~
138 St.[b]	.88	0.88	.88	.89	.89	.89	.89	.89	.89	.89	.89
139 T.	.91	.92	.92	.92	.94	.93	.94	.95	.94	.95	.95
140 T.	.94	.97	.97	.97	.99	.99	1.00	1.00	1.00	1.00	1.00
141 T.	.89	.91	.91	.92	.92	.93	.93	.93	.93	.94	.94
142 T.	1.00	1.00	1.00	1.00	1.00	1.00	1.00	1.00	1.00	1.00	1.00
143 T.	1.00	1.00	1.00	1.00	1.00	1.00	1.00	1.00	1.00	1.00	1.00
144 T.	.99	1.00	1.00	1.00	1.00	1.00	1.00	1.00	1.00	1.00	1.00
145 T.	.89	.89	.90	.91	.91	.91	.92	.92	.92	.93	.92
146 T.	.93	.94	.95	.96	.96	.97	.96	.96	.96	.97	.98
147 T.	1.00	1.00	1.00	1.00	1.00	1.00	1.00	1.00	1.00	1.00	1.00
148 T.	1.00	1.00	1.00	1.00	1.00	1.00	1.00	1.00	1.00	1.00	1.00
149 T.	1.00	1.00	1.00	1.00	1.00	1.00	1.00	1.00	1.00	1.00	1.00
150 T.	1.00	.95	.95	.95	.95	.95	.96	.95	.95	.95	.94
151 St.	.88	.88	.88	.88	.88	.88	.88	.88	.88	.88	.88

[a]T. indicates total-pressure tube (ram-recovery ratio, $\frac{H_l - p_o}{H_o - p_o}$).

[b]St. indicates static-pressure tube (coefficient given as P).

Note: A line has been drawn through doubtful data.

TABLE 7.– PRESSURE COEFFICIENTS FOR THE AIRPLANE IN THE CLEAN CONDITION; α, 6.2°

(a) Wing root

Orifice No. \ ψ	-12	-8	-6	-4	-2	0	2	4	6	8	12
27	0.19	-0.12	-0.32	-0.42	-0.76	-0.83	-0.98	-1.40	-1.49	-1.76	-2.13
28	-.75	-1.06	-1.25	-1.35	-1.64	-1.71	-1.82	-2.11	-2.18	-2.35	-2.60
29	-.55	-.74	-.85	-.93	-1.10	-1.14	-1.21	-1.36	-1.41	-1.51	-1.64
30	-.51	-.64	-.72	-.77	-.88	-.90	-.96	-1.03	-1.07	-1.04	-1.21
31	-1.37	-.57	-.63	-.67	-.78	-.78	-.81	-.86	-.89	-.93	-.97
32	-.53	-.62	-.68	-.71	-.78	-.81	-.84	-.87	-.89	-.92	-.96
33	-.50	-.57	-.61	-.65	-.70	-.72	-.74	-.76	-.78	-.80	-.82
34	-.49	-.56	-.59	-.62	-.66	-.68	-.71	-.71	-.73	-.73	-.75
35	-.45	-.50	-.53	-.56	-.58	-.60	-.63	-.62	-.64	-.65	-.65
36	-.38	-.44	-.46	-.49	-.51	-.53	-.54	-.55	-.56	-.58	-.58
37	-.32	-.36	-.39	-.41	-.42	-.43	-.45	-.44	-.45	-.45	-.45
38	-.23	-.27	-.27	-.29	-.31	-.32	-.33	-.33	-.33	-.34	-.34

(b) Upper stabilizer root

Orifice No. \ ψ	-12	-8	-6	-4	-2	0	2	4	6	8	12
67	~~-0.08~~	~~-0.07~~	~~-0.07~~	~~-0.08~~	~~-0.08~~	~~-0.09~~	~~-0.06~~	~~-0.06~~	~~-0.05~~	~~-0.05~~	~~-0.05~~
68	-.14	-.07	-.03	.02	.04	.09	.13	.15	.14	.13	.08
69	-.38	-.26	-.20	-.12	-.07	-.04	-.03	-.01	.00	-.04	-.09
70	-.34	-.25	-.21	-.17	-.15	-.13	-.11	-.10	-.11	-.13	-.15
71	-.37	-.33	-.32	-.29	-.29	-.28	-.25	-.26	-.29	-.33	-.39
72	-.37	-.41	-.42	-.45	-.50	-.50	-.52	-.55	-.60	-.66	-.76
73	.08	.01	-.04	-.14	-.27	-.39	-.43	-.52	-.56	-.59	-.82
74	.02	-.15	-.30	-.38	-.31	-.39	-.81	-.81	-.65	-.77	-.99
75	.21	.06	-.06	-.21	-.34	-.52	-.76	-.98	-1.24	-1.49	-1.95
76	-1.62	-.83	-.50	-.24	-.01	.27	-.50	.55	.49	.37	.00
77	~~-.06~~	~~.06~~	~~.14~~	~~.20~~	~~.23~~	~~.26~~	~~-.24~~	~~.20~~	~~.15~~	~~.08~~	~~-.08~~

Note: Lines have been drawn through doubtful data.

TABLE 7.– CONTINUED

(c) Lower stabilizer root

Orifice No. \ ψ	−12	−8	−6	−4	−2	0	2	4	6	8	12
78	0.02	0.04	0.04	0.05	0.08	0.09	0.11	0.12	0.12	0.13	0.12
79	−.04	−.04	−.03	−.02	.00	.00	.01	.02	.04	.04	.01
80	−.10	−.12	−.12	−.12	−.11	−.12	−.10	−.09	−.08	−.07	−.09
81	−.04	−.07	−.08	−.08	−.06	−.07	−.06	−.06	−.04	−.04	−.07
82	−.04	−.07	−.09	−.11	−.10	−.11	−.10	−.10	−.09	−.09	−.11
83	~~−.40~~	~~−.40~~	~~−.40~~	~~−.40~~	~~−.41~~	~~−.41~~	~~−.38~~	~~−.38~~	~~−.27~~	~~−.37~~	~~−.37~~
84	~~−.38~~	~~−.38~~	~~−.38~~	~~−.38~~	~~−.38~~	~~−.39~~	~~−.36~~	~~−.35~~	~~−.35~~	~~−.36~~	~~−.36~~
85	.20	.14	.11	.08	.06	.02	.02	.00	.01	.01	.01
86	.27	.21	.17	.12	.09	.04	.03	.01	.02	.03	.03
87	−.29	.12	.39	.56	.66	.86	−.89	.83	.75	.68	.66
88	~~1.00~~	~~1.00~~	~~1.00~~	~~1.00~~	~~1.00~~	~~1.00~~	~~1.00~~	~~1.00~~	~~1.00~~	~~1.00~~	~~1.00~~

Note: Lines have been drawn through doubtful data.

TABLE 7.– CONTINUED

(d) Fuselage and canopy

Orifice No. \ ψ	−12	−8	−6	−4	−2	0	2	4	6	8	12
1	0.14	0.08	0.02	−0.03	−0.11	−0.13	−0.18	−0.27	−0.32	−0.41	−0.54
2	.11	.11	.08	.05	.00	−.02	−.04	−.09	−.09	−.14	−.24
3	−.21	−.16	−.16	−.15	−.17	−.16	−.17	−.19	−.20	−.25	−.31
4	−.32	−.27	−.26	−.26	−.27	−.26	−.26	−.27	−.29	−.34	−.39
5	−.34	−.28	−.27	−.27	−.27	−.27	−.28	−.29	−.31	−.35	−.44
6	−.40	−.34	−.32	−.30	−.30	−.30	−.30	−.32	−.34	−.36	−.44
7	−.41	−.33	−.30	−.29	−.29	−.29	−.29	−.31	−.33	−.36	−.44
8	−.40	−.31	−.28	−.28	−.27	−.26	−.27	−.27	−.30	−.34	−.41
9	.13	.23	.28	.33	.34	.37	.35	.35	.34	.30	.20
10	−.17	−.02	.04	.06	.10	.11	.10	.09	.05	.00	−.13
11	−.36	−.19	−.14	−.10	−.08	−.06	−.06	−.08	−.11	−.17	−.32
12	−.56	−.39	−.34	−.29	−.27	−.26	−.27	−.28	−.31	−.36	−.51
13	−1.05	−.88	−.82	−.78	−.76	−.24	−.75	−.76	−.79	−.83	−.96
14	−1.16	−1.00	−.95	−.91	−.90	−.58	−.89	−.91	−.95	−1.00	−1.14
15	−.99	−.83	−.78	−.74	−.73	−.72	−.72	−.73	−.77	−.82	−.96
16	−.85	−.66	−.60	−.56	−.54	−.52	−.54	−.55	−.59	−.65	−.81
17	−.84	−.64	−.50	−.51	−.50	−.48	−.48	−.50	−.55	−.61	−.79
18	~~.97~~	~~1.00~~	~~1.00~~	~~1.00~~	~~1.00~~	~~1.00~~	~~1.00~~	~~1.00~~	~~1.00~~	~~.99~~	~~.96~~
19	−.09	−.05	−.06	−.08	−.13	−.18	−.25	−.50	−.43	−.55	−.82
20	−.18	−.28	−.35	−.43	−.53	−.64	−.76	−.88	−1.02	−1.16	−1.46
21	−.37	−.48	−.53	−.61	−.68	−.77	−.87	−.95	−1.05	−1.14	−1.35
22	−.38	−.45	−.48	−.53	−.58	−.64	−.70	−.73	−.80	−.85	−.96
23	−.44	−.45	−.46	−.48	−.50	−.52	−.54	−.55	−.57	−.59	−.65
24	−.40	−.39	−.38	−.38	−.39	−.39	−.40	−.40	−.42	−.43	−.48
25	−.52	−.44	−.41	−.40	−.38	−.35	−.31	−.33	−.32	−.32	−.34
26	−.10	−.08	−.07	−.07	−.07	−.07	−.09	−.08	−.09	−.09	−.09
39	.96	.86	.79	.69	.60	.47	.32	.18	.01	−.16	−.55
40	.60	.45	.37	.27	.19	.09	−.02	−.12	−.22	−.32	−.53
41	.45	.31	.25	.16	.10	.02	−.06	−.12	−.20	−.28	−.44
42	.34	.21	.15	.07	.01	−.06	−.13	−.19	−.26	−.32	−.45
43	.24	.12	.06	−.01	−.07	−.13	−.21	−.26	−.32	−.37	−.49
44	−.04	−.18	−.24	−.31	−.37	−.44	−.51	−.56	−.62	−.67	−.79
45	.07	−.04	−.10	−.16	−.21	−.27	−.32	−.36	−.42	−.46	−.54
46	−.01	−.11	−.15	−.19	−.25	−.28	−.31	−.35	−.38	−.42	−.47
47	−.12	−.22	−.27	−.31	−.39	−.42	−.46	−.50	−.53	−.57	−.63
48	−.35	−.46	−.51	−.56	−.63	−.65	−.70	−.74	−.77	−.81	−.87
49	−.10	−.08	−.07	−.08	−.07	−.07	−.09	−.08	−.09	−.09	−.09

Note: A line has been drawn through doubtful data.

TABLE 7.– CONTINUED

(d) Fuselage and canopy (Concluded)

Orifice No. \ ψ	-12	-8	-6	-4	-2	0	2	4	6	8	12
50	0.53	0.39	0.31	0.22	0.13	0.04	-0.04	-0.14	-0.24	-0.34	-0.54
51	.37	.23	.17	.10	.02	-.05	-.13	-.19	-.26	-.34	-.49
52	.28	.16	.10	.03	-.04	-.10	-.16	-.22	-.28	-.35	-.46
53	.19	.07	.02	-.04	-.11	-.17	-.22	-.27	-.34	-.39	-.50
54	-.10	-.08	-.07	-.08	-.08	-.07	-.09	-.08	-.09	-.09	-.09
55	.77	.63	.53	.42	-.22	.19	.05	-.11	-.26	-.43	-.79
56	.42	.29	.21	.13	.04	-.04	-.13	-.21	-.31	-.41	-.58
57	.24	.12	.06	.00	-.07	-.13	-.20	-.27	-.33	-.40	-.53
58	.21	.10	.04	-.02	-.08	-.12	-.19	-.24	-.29	-.35	-.46
59	.11	.00	-.05	-.12	-.18	-.22	-.28	-.33	-.38	-.43	-.53
60	.02	-.08	-.13	-.19	-.24	-.28	-.34	-.38	-.42	-.48	-.56
61	.10	.93	.87	.80	.73	.62	.49	.38	.24	.10	-.24
62	.65	.51	.44	.34	.27	.17	.06	-.03	-.13	-.22	-.44
63	.50	.38	.32	.23	.17	.10	.01	-.05	-.14	-.21	-.37
64	.37	.25	.18	.11	.04	-.03	-.11	-.17	-.24	-.31	-.45
65	.38	.17	.11	.04	-.03	-.09	-.16	-.21	-.28	-.35	-.47
66	.19	.07	.01	-.06	-.12	-.18	-.24	-.29	-.35	-.41	-.52

TABLE 7.– CONTINUED

(e) Fuselage duct

Orifice No. \ ψ	-12	-8	-6	-4	-2	0	2	4	6	8	12
100 T.[a]	0.93	0.95	0.96	0.96	0.96	0.97	0.96	0.94	0.93	0.93	0.91
101 T.	.96	.97	1.00	.99	.99	.99	.98	.96	.95	.95	.92
102 T.	.99	.99	.99	.98	.98	.97	.97	.98	.99	1.00	.98
103 T.	.99	1.00	1.00	1.00	1.00	1.00	1.00	1.00	1.00	1.00	.99
104 T.	1.00	1.00	1.00	1.00	1.00	1.00	1.00	1.00	1.00	1.00	1.00
105 T.	.96	.96	.96	.96	.96	.97	.97	.96	.96	.96	.96
106 T.	.95	.94	.95	.94	.94	.95	.95	.94	.93	.93	.91
107 T.	1.00	1.00	1.00	1.00	1.00	1.00	1.00	1.00	1.00	1.00	.99
108 T.	1.00	1.00	1.00	1.00	1.00	1.00	1.00	1.00	1.00	1.00	1.00
109 T.	1.00	1.00	1.00	1.00	1.00	1.00	1.00	1.00	1.00	1.00	1.00
110 T.	1.00	1.00	1.00	1.00	1.00	1.00	1.00	1.00	1.00	1.00	1.00
111 T.	.93	.93	.94	.94	.94	.95	.94	.93	.93	.94	.93
112 St.[b]	.88	.89	.89	.89	.89	.89	.89	.89	.89	.88	.88
113 T.	.66	.67	.67	.66	.66	.66	.65	.65	.65	.65	.64
114 T.	1.00	1.00	1.00	1.00	1.00	1.00	1.00	.99	.99	1.00	.97
115 T.	1.00	1.00	1.00	1.00	1.00	1.00	1.00	1.00	1.00	1.00	1.00
116 T.	1.00	1.00	1.00	1.00	1.00	1.00	1.00	1.00	1.00	1.00	1.00
117 T.	1.00	1.00	1.00	1.00	1.00	1.00	1.00	1.00	1.00	1.00	1.00
118 T.	.96	.94	.95	.94	.94	.95	.94	.93	.93	.93	.92
119 T.	.97	.96	.96	.96	.96	.96	.96	.95	.95	.96	.94
120 T.	1.00	1.00	1.00	.99	.99	1.00	.99	.98	.98	.97	.94
121 T.	1.00	1.00	1.00	1.00	1.00	1.00	1.00	1.00	1.00	1.00	.95
122 T.	1.00	1.00	1.00	1.00	1.00	1.00	1.00	1.00	1.00	1.00	.99
123 T.	1.00	1.00	1.00	1.00	1.00	1.00	1.00	1.00	1.00	1.00	1.00
124 T.	.93	.92	.92	.91	.92	.92	.91	.90	.90	.90	.89
125 St.	.02	.02	.02	.02	.02	.02	.02	.02	.02	.02	.02
127 T.	.96	.96	.96	.96	.96	.98	.98	.98	.98	.99	1.00
128 T.	1.00	1.00	1.00	1.00	1.00	1.00	1.00	1.00	1.00	1.00	1.00

[a]T. indicates total-pressure tube (ram-recovery ratio, $\frac{H_l - p_o}{H_o - p_o}$).

[b]St. indicates static-pressure tube (coefficient given as P).

TABLE 7.– CONCLUDED

(e) Fuselage duct (Concluded)

Orifice No. \ ψ	-12	-8	-6	-4	-2	0	2	4	6	8	12
129 T.[a]	1.00	1.00	1.00	1.00	1.00	1.00	1.00	1.00	1.00	1.00	1.00
130 T.	1.00	1.00	1.00	1.00	1.00	1.00	1.00	1.00	1.00	1.00	1.00
131 T.	.91	.90	.91	.90	.91	.92	.91	.90	.90	.91	.90
132 T.	.96	.96	.96	.96	.96	.96	.96	.96	.96	.97	.97
133 T.	.97	.98	.98	.98	.99	1.00	1.00	.99	1.00	1.00	1.00
134 T.	.99	1.00	1.00	1.00	1.00	1.00	1.00	1.00	1.00	1.00	1.00
135 T.	1.00	1.00	1.00	1.00	1.00	1.00	1.00	1.00	1.00	1.00	1.00
136 T.	1.00	1.00	1.00	1.00	1.00	1.00	1.00	1.00	1.00	1.00	1.00
137 T.	~~.01~~	~~.01~~	~~.01~~	~~.01~~	~~.01~~	~~.01~~	~~.01~~	~~.01~~	~~.02~~	~~.01~~	~~.01~~
138 St.[b]	.88	.88	.89	.89	.89	.89	.89	.89	.89	.89	.88
139 T.	.91	.91	.92	.92	.92	.94	.94	.94	.94	.95	.95
140 T.	.94	.96	.97	.97	.98	.99	1.00	1.00	1.00	1.00	1.00
141 T.	.90	.91	.92	.92	.93	.94	.94	.94	.94	.95	.95
142 T.	1.00	1.00	1.00	1.00	1.00	1.00	1.00	1.00	1.00	1.00	1.00
143 T.	1.00	1.00	1.00	1.00	1.00	1.00	1.00	1.00	1.00	1.00	1.00
144 T.	1.00	1.00	1.00	1.00	1.00	1.00	1.00	1.00	1.00	1.00	1.00
145 T.	.90	.90	.91	.92	.92	.93	.93	.93	.93	.94	.93
146 T.	.95	.95	.96	.96	.96	.97	.97	.97	.97	.98	.98
147 T.	1.00	1.00	1.00	1.00	1.00	1.00	1.00	1.00	1.00	1.00	1.00
148 T.	1.00	1.00	1.00	1.00	1.00	1.00	1.00	1.00	1.00	1.00	1.00
149 T.	1.00	1.00	1.00	1.00	1.00	1.00	1.00	1.00	1.00	1.00	1.00
150 T.	.94	.94	.95	.94	.95	.96	.96	.95	.94	.95	.94
151 St.	.88	.88	.88	.88	.89	.89	.88	.88	.88	.88	.87

[a]T. indicates total-pressure tube (ram-recovery ratio, $\frac{H_l-p_o}{H_o-p_o}$).

[b]St. indicates static-pressure tube (coefficient given as P).

Note: A line has been drawn through doubtful data.

TABLE 8.– PRESSURE COEFFICIENTS FOR THE AIRPLANE IN THE CLEAN CONDITION; α, 12.3°

(a) Wing root

Orifice No. \ ψ	-12	-8	-6	-4	-2	0	2	4	6	8	12
27[a]	- - -	- - -	- - -	- - -	- - -	- - -	- - -	- - -	- - -	- - -	- - -
28[a]	- - -	- - -	- - -	- - -	- - -	- - -	- - -	- - -	- - -	- - -	- - -
29	-1.32	-1.60	-1.75	-1.88	-2.02	-2.18	-2.26	-2.36	-2.46	-2.53	-2.68
30	-0.94	-1.11	-1.19	-1.28	-1.38	-1.46	-1.51	-1.56	-1.63	-1.68	-1.76
31	-.76	-.89	-.96	-1.03	-1.09	-1.15	-1.19	-1.21	-1.25	-1.29	-1.33
32	-.76	-.88	-.93	-.99	-1.05	-1.10	-1.13	-1.15	-1.19	-1.21	-1.24
33	-.66	-.75	-.80	-.84	-.88	-.92	-.95	-.96	-.99	-1.01	-1.03
34	-.61	-.68	-.73	-.76	-.79	-.82	-.84	-.86	-.88	-.88	-.90
35	-.50	-.57	-.61	-.64	-.68	-.70	-.71	-.72	-.74	-.76	-.76
36	-.43	-.49	-.53	-.57	-.59	-.61	-.63	-.64	-.65	-.67	-.68
37	-.33	-.38	-.41	-.43	-.46	-.47	-.48	-.49	-.50	-.51	-.52
38	-.22	-.26	-.28	-.31	-.33	-.34	-.35	-.36	-.37	-.38	-.39

(b) Upper stabilizer root

Orifice No. \ ψ	-12	-8	-6	-4	-2	0	2	4	6	8	12
67	~~-0.04~~	~~-0.04~~	~~-0.04~~	~~-0.04~~	~~-0.04~~	~~-0.05~~	~~-0.03~~	~~-0.03~~	~~-0.03~~	~~-0.03~~	~~-0.04~~
68	-.15	-.04	-.01	.02	.05	.08	.12	.14	.09	.03	.02
69	-.37	-.21	-.15	-.09	-.05	-.03	.05	.00	-.04	-.07	-.14
70	-.38	-.26	-.21	-.18	-.15	-.04	-.13	-.13	-.13	-.16	-.21
71	-.48	-.39	-.36	-.33	-.30	-.30	-.28	-.29	-.31	-.35	-.37
72	-.54	-.51	-.52	-.53	-.55	-.56	-.53	-.57	-.63	-.72	-.81
73	-.04	-.25	-.29	-.37	-.44	-.46	-.58	-.56	-.61	-.75	-.89
74	-.16	-.39	-.33	-.38	-.46	-.53	-.60	-.68	-.79	-.92	-1.13
75	-.06	-.19	-.29	-.44	-.60	-.77	-1.04	-1.27	-1.57	-1.85	-2.27
76	-.85	-.29	-.13	.11	.24	.36	.47	.44	.28	.06	-.48
77	~~.12~~	~~.25~~	~~.29~~	~~.34~~	~~.37~~	~~.37~~	~~.37~~	~~.35~~	~~.28~~	~~.21~~	~~.10~~

[a]Peak negative pressures exceeded limit of the manometers.

Note: Lines have been drawn through doubtful data.

TABLE 8.– CONTINUED

(c) Lower stabilizer root

Orifice No. \ ψ	-12	-8	-6	-4	-2	0	2	4	6	8	12
78	0.02	0.03	0.03	0.04	0.06	0.08	0.11	0.11	0.11	0.11	0.11
79	-.04	-.05	-.06	-.07	-.05	-.04	-.01	.00	.00	.01	.02
80	-.13	-.16	-.18	-.19	-.18	-.15	-.13	-.12	-.11	-.10	-.09
81	-.07	-.10	-.13	-.13	-.13	-.12	-.10	-.09	-.09	-.08	-.07
82	-.07	-.12	-.15	-.16	-.18	-.15	-.14	-.13	-.13	-.13	-.12
83	~~-.36~~	~~-.36~~	~~-.37~~	~~-.37~~	~~-.37~~	~~-.37~~	~~-.34~~	~~-.34~~	~~-.35~~	~~-.34~~	~~-.35~~
84	~~-.34~~	~~-.34~~	~~-.34~~	~~-.34~~	~~-.35~~	~~-.35~~	~~-.32~~	~~-.32~~	~~-.32~~	~~-.32~~	~~-.33~~
85	.20	.12	.07	.03	-.01	-.03	-.04	-.04	-.05	-.05	-.06
86	.28	.18	.10	.05	.00	-.03	-.04	-.04	-.05	-.04	-.06
87	.15	.55	.72	.83	.89	.90	.83	.74	.71	.69	.68
88	~~1.00~~	~~1.00~~	~~1.00~~	~~1.00~~	~~1.00~~	~~1.00~~	~~1.00~~	~~1.00~~	~~1.00~~	~~1.00~~	~~1.00~~

(d) Fuselage and canopy

Orifice No. \ ψ	-12	-8	-6	-4	-2	0	2	4	6	8	12
1	-0.37	-0.47	-0.56	-0.61	-0.71	-0.77	-0.84	-0.93	-0.99	-1.06	-1.21
2	-.22	-.25	-.27	-.29	-.33	-.34	-.37	-.42	-.47	-.53	-.63
3	-.44	-.41	-.40	-.39	-.41	-.40	-.42	-.44	-.45	-.47	-.52
4	-.51	-.46	-.46	-.44	-.46	-.44	-.46	-.47	-.48	-.50	-.57
5	-.49	-.44	-.42	-.42	-.42	-.42	-.44	-.45	-.46	-.49	-.55
6	-.54	-.47	-.45	-.43	-.43	-.42	-.44	-.45	-.46	-.49	-.54
7	-.54	-.42	-.44	-.39	-.40	-.39	-.39	-.40	-.42	-.45	-.50
8	-.56	-.43	-.43	-.35	-.36	-.34	-.35	-.36	-.38	-.40	-.46
9	-.04	-.14	.19	.27	.27	.27	.21	.21	.21	.18	.11
10	-.23	-.08	-.04	-.01	.02	.03	.01	.00	-.04	-.09	-.22
11	-.44	-.28	-.24	-.19	-.17	-.15	-.17	-.19	-.22	-.29	-.43
12	-.64	-.49	-.44	-.40	-.37	-.25	-.37	-.40	-.43	-.49	-.62
13	-1.13	-.98	-.93	-.89	-.87	-.84	-.87	-.88	-.91	-.96	-1.07
14	-1.21	-1.07	-1.03	-.98	-.97	-.96	-.98	-1.00	-1.04	-1.09	-1.21
15	-1.01	-.87	-.82	-.78	-.77	-.74	-.77	-.79	-.82	-.88	-1.01

Note: Lines have been drawn through doubtful data.

TABLE 8.– CONTINUED

(d) Fuselage and canopy (Concluded)

Orifice No. \ ψ	-12	-8	-6	-4	-2	0	2	4	6	8	12
16	-0.85	-0.67	-0.62	-0.57	-0.56	-0.54	-0.56	-0.58	-0.63	-0.69	-0.84
17	-.82	-.63	-.68	-.52	-.50	-.47	-.50	-.52	-.57	-.63	-.81
18	~~.98~~	~~1.00~~	~~1.00~~	~~1.00~~	~~1.00~~	~~1.00~~	~~1.00~~	~~1.00~~	~~1.00~~	~~1.00~~	~~-.97~~
19	-.19	-.15	-.16	-.18	-.23	-.26	-.34	-.40	-.51	-.62	-.87
20	-.25	-.34	-.40	-.48	-.57	-.65	-.78	-.88	-1.01	-1.14	-1.41
21	-.42	-.51	-.57	-.63	-.71	-.76	-.87	-.94	-1.03	-1.12	-1.28
22	-.44	-.49	-.53	-.57	-.62	-.64	-.71	-.75	-.80	-.85	-.93
23	-.50	-.51	-.52	-.53	-.54	-.54	-.57	-.59	-.60	-.62	-.66
24	-.46	-.44	-.44	-.43	-.45	-.42	-.44	-.44	-.45	-.46	-.49
25	-.58	-.51	-.49	-.45	-.43	-.39	-.38	-.37	-.35	-.35	-.35
26	-.10	-.08	-.07	-.07	-.08	-.07	-.09	-.09	-.09	-.11	-.11
39	.88	.79	.74	.65	.54	.42	.29	.17	-.01	-.17	-.52
40	.52	.37	.29	.21	.11	.02	-.09	-.18	-.29	-.38	-.58
41	.37	.24	.17	.10	.01	-.05	-.14	-.21	-.29	-.36	-.50
42	.26	.13	.06	.00	-.08	-.14	-.21	-.27	-.34	-.40	-.52
43	.16	.04	-.03	-.09	-.17	-.22	-.29	-.35	-.40	-.46	-.56
44	-.11	-.24	-.32	-.39	-.47	-.52	-.61	-.67	-.73	-.79	-.88
45	.00	-.12	-.19	-.25	-.32	-.35	-.43	-.47	-.52	-.57	-.64
46	-.13	-.24	-.30	-.34	-.41	-.43	-.49	-.53	-.56	-.60	-.65
47	-.40	-.53	-.61	-.66	-.74	-.77	-.85	-.88	-.93	-.96	-1.03
48	-.65	-.78	-.84	-.91	-.97	-1.00	-1.07	-1.11	-1.14	-1.18	-1.22
49	-.10	-.08	-.07	-.07	-.08	-.07	-.09	-.09	-.09	-.11	-.11
50	.39	.26	.18	.10	.00	-.08	-.19	-.26	-.36	-.46	-.63
51	.25	.12	.06	-.01	-.09	-.15	-.23	-.29	-.36	-.43	-.56
52	.15	.04	-.04	-.09	-.15	-.20	-.28	-.33	-.34	-.45	-.54
53	.08	-.04	-.10	-.16	-.22	-.27	-.34	-.38	-.44	-.48	-.53
54	-.10	-.08	-.07	-.07	-.08	-.07	-.09	-.09	-.09	-.11	-.11
55	.56	.41	.31	.19	.05	-.08	-.24	-.38	-.56	-.72	-1.08
56	.22	.10	.02	-.06	-.16	-.23	-.33	-.40	-.50	-.58	-.74
57	.08	-.03	-.09	-.15	-.22	-.27	-.35	-.39	-.46	-.52	-.62
58	.04	-.06	-.12	-.16	-.23	-.27	-.33	-.37	-.43	-.48	-.56
59	-.05	-.15	-.20	-.26	-.32	-.35	-.41	-.46	-.50	-.54	-.62
60	-.13	-.22	-.27	-.33	-.38	-.42	-.47	-.51	-.54	-.59	-.64
61	.96	.91	.89	.83	.76	.67	.57	-.42	.35	.22	-.07
62	.65	.51	.44	.35	.26	.17	.06	-.02	-.13	-.23	-.43
63	.49	.37	.30	.23	.13	.07	-.02	-.08	-.17	-.25	-.39
64	.35	.22	.14	.07	-.01	-.08	-.16	-.22	-.30	-.37	-.50
65	.28	.15	.07	.01	-.07	-.13	-.21	-.28	-.34	-.41	-.53
66	.16	.03	-.04	-.11	-.19	-.24	-.32	-.37	-.44	-.49	-.60

Note: A line has been drawn through doubtful data.

TABLE 8.– CONTINUED

(e) Fuselage duct

Orifice No. \ ψ	−12	−8	−6	−4	−2	0	2	4	6	8	12
100 T.[a]	0.88	0.89	0.95	0.96	0.97	0.97	0.96	0.94	0.93	0.91	0.87
101 T.	.91	.95	.97	.96	.99	.99	.97	.96	.94	.92	.86
102 T.	.97	.99	1.00	1.00	.99	.98	.99	.98	.97	.97	.91
103 T.	.99	1.00	1.00	1.00	1.00	1.00	1.00	1.00	1.00	.99	.99
104 T.	.93	.99	1.00	1.00	1.00	1.00	1.00	1.00	1.00	1.00	.94
105 T.	.77	.89	.96	.96	.96	.96	.96	.96	.96	.95	.78
106 T.	.90	.90	.96	.96	.95	.95	.95	.94	.93	.92	.84
107 T.	1.00	1.00	1.00	1.00	1.00	1.00	1.00	1.00	1.00	.99	.88
108 T.	1.00	1.00	1.00	1.00	1.00	1.00	1.00	1.00	1.00	1.00	.74
109 T.	1.00	1.00	1.00	1.00	1.00	1.00	1.00	1.00	1.00	1.00	.61
110 T.	1.00	1.00	1.00	1.00	1.00	1.00	1.00	1.00	1.00	1.00	.57
111 T.	.91	.90	.94	.94	.94	.93	.93	.93	.92	.92	.57
112 St.[b]	.64	.72	.88	.88	.88	.88	.88	.88	.88	.86	.56
113 T.	.63	.63	.66	.66	.66	.66	.66	.65	.65	.62	.38
114 T.	1.00	1.00	1.00	1.00	1.00	1.00	1.00	.99	.99	.95	.59
115 T.	1.00	1.00	1.00	1.00	1.00	1.00	1.00	1.00	1.00	.98	.57
116 T.	1.00	1.00	1.00	1.00	1.00	1.00	1.00	1.00	1.00	.99	.57
117 T.	1.00	1.00	1.00	1.00	1.00	1.00	1.00	1.00	1.00	.98	.57
118 T.	.91	.90	.95	.95	.94	.94	.94	.93	.92	.95	.57
119 T.	.94	.92	.96	.95	.95	.95	.95	.95	.93	.88	.59
120 T.	.98	.97	.99	.97	.97	.96	.95	.94	.92	.88	.59
121 T.	.96	.97	1.00	1.00	1.00	1.00	.99	.95	.91	.88	.59
122 T.	.87	.92	1.00	1.00	1.00	1.00	1.00	.99	.95	.87	.58
123 T.	.73	.84	1.00	1.00	1.00	1.00	1.00	1.00	.99	.88	.58
124 T.	.65	.75	.91	.91	.90	.90	.90	.90	.89	.88	.58
125 T.	.02	.02	.03	.02	.03	.03	.03	.02	.03	.02	.01

[a]T. indicates total-pressure tube (ram-recovery ratio, $\frac{H_l - p_o}{H_o - p_o}$).

[b]St. indicates static-pressure tube (coefficient given as P).

TABLE 8.– CONCLUDED

(e) Fuselage duct (Concluded)

Orifice No. \ ψ	−12	−8	−6	−4	−2	0	2	4	6	8	12
127 T.[a]	0.61	0.69	0.95	0.94	0.94	0.95	0.96	0.96	0.96	0.96	0.63
128 T.	.57	.68	.99	.98	.98	.97	.97	.98	.98	.99	.59
129 T.	.55	.66	1.00	1.00	1.00	1.00	1.00	1.00	1.00	.98	.56
130 T.	.55	.65	1.00	1.00	1.00	1.00	1.00	1.00	1.00	.96	.56
131 T.	.55	.65	.90	.90	.90	.89	.89	.89	.89	.87	.57
132 T.	.57	.67	.96	.97	.97	.96	.97	.96	.96	.96	1.21
133 T.	.57	.66	.96	.98	.98	.98	.99	.99	.99	.99	.98
134 T.	.57	.66	.98	1.00	1.00	1.00	1.00	1.00	1.00	1.00	.96
135 T.	.57	.65	1.00	1.00	1.00	1.00	1.00	1.00	1.00	1.00	.84
136 T.	.57	.65	1.00	1.00	1.00	1.00	1.00	1.00	1.00	1.00	.75
137 T.	.02	.02	.02	.02	.02	.02	.02	.02	.02	.02	.00
138 St.[b]	.57	.73	.88	.88	.88	.88	.88	.88	.88	.87	.61
139 T.	.58	.70	.92	.93	.93	.93	.94	.95	.94	.94	.94
140 T.	.57	.68	.96	.98	.99	.99	.99	1.00	1.00	1.00	1.00
141 T.	.55	.63	.92	.93	.93	.93	.93	.93	.93	.93	.88
142 T.	.55	.65	1.00	1.00	1.00	1.00	1.00	1.00	1.00	1.00	1.00
143 T.	.55	.64	1.00	1.00	1.00	1.00	1.00	1.00	1.00	1.00	1.00
144 T.	.55	.67	1.00	1.00	1.00	1.00	1.00	1.00	1.00	1.00	1.00
145 T.	.80	.85	.93	.93	.93	.93	.93	.93	.93	.92	.86
146 T.	.86	.99	.97	.97	.97	.97	.97	.97	.97	.97	.97
147 T.	.82	.96	1.00	1.00	1.00	1.00	1.00	1.00	.99	.99	1.00
148 T.	.65	.87	1.00	1.00	1.00	1.00	1.00	1.00	.99	1.00	1.00
149 T.	.57	.77	1.00	1.00	1.00	1.00	1.00	1.00	.99	1.00	1.00
150 T.	.56	.71	.95	.95	.95	.95	.95	.95	.94	.94	.93
151 St.	.55	.68	.87	.88	.88	.88	.88	.87	.87	.85	.62

[a]T. indicates total-pressure tube (ram-recovery ratio, $\frac{H_l - p_o}{H_o - p_o}$).

[b]St. indicates static-pressure tube (coefficient given as P).

Note: A line has been drawn through doubtful data.

TABLE 9.– PRESSURE COEFFICIENTS FOR THE AIRPLANE WITH THE SKYHOOK EXTENDED; ψ, 0°

(a) Wing root

Orifice No. \ α	−4.0	0.1	4.1	6.2	8.2	10.2	12.3	14.3
27[a]	0.42	0.43	−0.30	−0.90	−1.73	−2.60	– – –	– – –
28[a]	.21	−.36	−1.25	−1.76	−2.37	−2.92	– – –	– – –
29	.07	−.35	−.88	−1.17	−1.50	−1.80	−2.21	−2.53
30	−.13	−.42	−.76	−.92	−1.11	−1.26	−1.48	−1.63
31	−.21	−.43	−.67	−.79	−.92	−1.02	−1.16	−1.24
32	−.32	−.51	−.71	−.81	−.92	−.99	−1.11	−1.16
33	−.35	−.50	−.66	−.72	−.80	−.85	−.94	−.98
34	−.43	−.54	−.67	−.71	−.77	−.80	−.86	−.92
35	−.43	−.50	−.58	−.61	−.65	−.66	−.70	−.77
36	−.38	−.44	−.51	−.54	−.57	−.58	−.62	−.69
37	−.35	−.39	−.42	−.43	−.45	−.45	−.48	−.54
38	−.28	−.30	−.31	−.31	−.32	−.32	−.34	−.40

(b) Upper stabilizer root

Orifice No. \ α	−4.0	0.1	4.1	6.2	8.2	10.2	12.3	14.3
67	~~0.32~~	~~0.25~~	~~0.21~~	~~0.19~~	~~0.17~~	~~0.14~~	~~0.13~~	~~0.10~~
68	.14	.15	.16	.16	.15	.14	.13	.11
69	.15	.15	.16	.16	.15	.14	.14	.12
70	.15	.16	.16	.16	.15	.15	.14	.12
71	.15	.16	.17	.17	.16	.15	.14	.12
72	.14	.15	.16	.16	.15	.14	.14	.11
73	.14	.15	.15	.15	.15	.14	.13	.11
74	.14	.15	.15	.15	.15	.14	.13	.11
75	.14	.15	.15	.15	.15	.14	.13	.11
76	.03	−.00	−.06	−.08	−.08	−.09	−.10	−.12
77	~~.01~~	~~.11~~	~~.21~~	~~.26~~	~~.29~~	~~.35~~	~~.39~~	~~.44~~

[a]Peak negative pressures exceeded limit of manometers for $\alpha \geqq 12°$.

Note: Lines have been drawn through doubtful data.

TABLE 9.- CONTINUED

(c) Lower stabilizer root

Orifice No. \ α	-4.0	0.1	4.1	6.2	8.2	10.2	12.3	14.3
78	0.10	0.12	0.09	0.11	0.13	0.13	0.12	0.11
79	.10	.12	.09	.10	.12	.13	.12	.11
80	.11	.12	.09	.10	.12	.13	.12	.11
81	.11	.12	.09	.09	.11	.13	.12	.10
82	.11	.13	.10	.09	.10	.12	.12	.10
83	~~.37~~	~~.32~~	~~.29~~	~~.28~~	~~.27~~	~~.25~~	~~.24~~	~~.23~~
84	~~.28~~	~~.19~~	~~.13~~	~~.10~~	~~.08~~	~~.05~~	~~.03~~	~~.00~~
85	.11	.13	.11	.08	.11	.12	.12	.11
86	.11	.12	.11	.08	.10	.12	.12	.11
87	.11	.13	.11	.07	.09	.12	.12	.11
88	~~1.00~~	~~1.00~~	~~1.00~~	~~1.00~~	~~1.00~~	~~1.00~~	~~1.00~~	~~1.00~~

(d) Fuselage and canopy

Orifice No. \ α	-4.0	0.1	4.1	6.2	8.2	10.2	12.3	14.3
1	-0.01	-0.01	0.00	0.00	0.00	0.01	0.00	0.00
2	.04	.04	.00	.00	-.01	-.01	-.02	-.03
3	.25	.25	-.05	-.13	-.22	-.29	-.37	-.44
4	.14	.14	-.13	-.19	-.27	-.32	-.40	-.45
5	.14	.14	-.13	-.18	-.26	-.31	-.39	-.44
6	.10	.10	-.13	-.18	-.25	-.38	-.37	-.43
7	-.23	-.23	-.31	-.30	-.33	-.33	-.34	-.35
8	.04	.04	-.17	-.21	-.25	-.26	-.30	-.32
9	-.26	-.26	-.32	-.32	-.34	-.32	-.34	-.35
10	-.17	-.17	-.21	-.21	-.22	-.21	-.22	-.21
11	-.02	-.02	-.01	-.01	.00	.01	.00	.01
12	-.09	-.09	-.22	-.23	-.29	-.29	-.32	-.34
13	-.31	-.31	-.44	-.45	-.51	-.50	-.53	-.55
14	-.45	-.45	-.54	-.54	-.59	-.58	-.61	-.63

Note: Lines have been drawn through doubtful data.

TABLE 9.– CONCLUDED

(d) Fuselage and canopy (Concluded)

Orifice No. \ α	–4.0	0.1	4.1	6.2	8.2	10.2	12.3	14.3
15	–0.42	–0.42	–0.49	–0.49	–0.52	–0.52	–0.53	–0.55
16	–.35	–.35	–.41	–.41	–.43	–.42	–.44	–.45
17	–.34	–.34	–.38	–.38	–.41	–.39	–.41	–.41
18	~~.99~~	~~.99~~	~~1.00~~	~~1.00~~	~~1.00~~	~~1.00~~	~~1.00~~	~~1.00~~
19	.07	.07	–.04	–.09	–.14	–.17	–.21	–.23
20	–.29	–.29	–.38	–.41	–.43	–.45	–.47	–.48
21	–.55	–.55	–.59	–.60	–.62	–.62	–.64	–.64
22	–.49	–.49	–.54	–.54	–.57	–.56	–.59	–.59
23	–.39	–.39	–.45	–.46	–.50	–.49	–.51	–.53
24	–.28	–.28	–.39	–.37	–.39	–.39	–.41	–.43
25	–.24	–.24	–.31	–.33	–.36	–.36	–.38	–.40
26	–.21	–.21	–.13	–.13	–.13	–.12	–.13	–.15
39	.44	.44	.48	.46	.47	.46	.43	.42
40	.10	.10	.11	.09	.07	.05	.02	.00
41	.03	.03	.04	.02	.01	–.02	–.05	–.09
42	–.04	–.04	–.04	–.05	–.08	–.10	–.14	–.18
43	–.11	–.11	–.11	–.13	–.16	–.18	–.23	–.26
44	–.16	–.16	–.15	–.17	–.20	–.21	–.26	–.29
45	–.23	–.23	–.24	–.26	–.30	–.32	–.37	–.41
46	–.17	–.17	–.24	–.28	–.33	–.38	–.46	–.52
47	–.01	–.01	–.32	–.42	–.55	–.65	–.81	–.94
48	–.12	–.12	–.55	–.67	–.80	–.90	–1.05	–1.15
49	–.21	–.21	–.13	–.12	–.13	–.12	–.13	–.15
50	.18	.18	.09	–.04	.01	–.03	–.09	–.13
51	.06	.06	–.02	–.04	–.08	–.11	–.15	–.20
52	–.01	–.01	–.06	–.09	–.13	–.16	–.21	–.25
53	–.08	–.08	–.13	–.16	–.20	–.22	–.28	–.32
54	–.21	–.21	–.13	–.13	–.13	–.12	–.13	–.15
55	.54	.54	.28	.19	.12	.03	–.08	–.18
56	.23	.23	.04	–.03	–.09	–.15	–.23	–.31
57	.03	.03	–.08	–.13	–.17	–.21	–.28	–.33
58	.04	.04	–.08	–.12	–.17	–.21	–.27	–.33
59	–.06	–.06	–.18	–.21	–.26	–.30	–.36	–.41
60	–.14	–.14	–.24	–.28	–.32	–.37	–.42	–.47
61	.38	.38	.60	.62	.66	.67	.68	.69
62	.05	.05	.16	.17	.18	.19	.17	.17
63	.00	.00	.10	.09	.09	.09	.07	.05
64	–.08	–.08	–.02	–.03	–.04	–.05	–.08	–.10
65	–.14	–.14	–.08	–.09	–.10	.11	–.14	–.16
66	– – –	– – –	–.07	–.18	–.21	–.21	–.25	–.27

Note: A line has been drawn through doubtful data.

TABLE 10.– PRESSURE COEFFICIENTS FOR THE AIRPLANE WITH THE SKYHOOK EXTENDED; ψ, 4°

(a) Wing root

Orifice No. \ α	−4.0	0.1	4.1	6.2	8.2	10.2	12.2	14.3
27[a]	0.46	0.24	−0.58	−1.28	−2.13	−3.08	- - -	- - -
28[a]	.06	−.63	−1.51	−2.06	−2.64	−3.22	- - -	- - -
29	−.04	−.53	−1.05	−1.34	−1.66	−1.98	−2.38	−2.62
30	−.21	−.54	−.87	−1.04	−1.21	−1.38	−1.59	−1.69
31	−.27	−.52	−.76	−.87	−.99	−1.10	−1.23	−1.28
32	−.37	−.59	−.78	−.88	−.97	−1.06	−1.16	−1.21
33	−.39	−.56	−.71	−.78	−.84	−.90	−.98	−1.05
34	−.41	−.56	−.67	−.72	−.76	−.80	−.87	−.95
35	−.45	−.53	−.61	−.64	−.66	−.69	−.73	−.85
36	−.39	−.48	−.54	−.57	−.59	−.61	−.65	−.77
37	−.36	−.41	−.44	−.45	−.46	−.46	−.50	−.62
38	−.28	−.31	−.32	−.51	−.33	−.34	−.36	−.47

(b) Upper stabilizer root

Orifice No. \ α	−4.0	0.1	4.1	6.2	8.2	10.2	12.2	14.3
67	~~0.29~~	~~0.22~~	~~0.16~~	~~0.13~~	~~0.12~~	~~0.09~~	~~0.07~~	~~0.05~~
68	.13	.13	.14	.14	.13	.12	.10	.08
69	.14	.13	.14	.14	.13	.12	.10	.09
70	.14	.14	.14	.14	.13	.12	.10	.09
71	.14	.14	.15	.14	.13	.12	.11	.09
72	.14	.13	.14	.14	.13	.12	.11	.09
73	.13	.13	.14	.13	.13	.12	.10	.09
74	.13	.13	.14	.14	.13	.12	.10	.09
75	.13	.13	.14	.14	.13	.12	.10	.09
76	.04	.03	−.01	−.03	−.04	−.06	−.10	−.12
77	~~−.05~~	~~.05~~	~~.15~~	~~.21~~	~~.26~~	~~.29~~	~~.34~~	~~.39~~

[a]Peak negative pressures exceeded limit of manometers for $\alpha \geq 12°$.

Note: Lines have been drawn through doubtful data.

TABLE 10.– CONTINUED

(c) Lower stabilizer root

Orifice No. \ α	–4.0	0.1	4.1	6.2	8.2	10.2	12.2	14.3
78	0.12	0.12	0.14	0.13	0.13	0.12	0.12	0.09
79	.12	.12	.14	.13	.13	.12	.12	.09
80	.12	.12	.13	.13	.13	.12	.12	.08
81	.12	.12	.13	.13	.12	.12	.11	.07
82	.12	.12	.13	.13	.12	.11	.11	.06
83	~~.41~~	~~.38~~	~~.36~~	~~.35~~	~~.35~~	~~.34~~	~~.32~~	~~.32~~
84	~~.22~~	~~.12~~	~~.05~~	~~.03~~	~~.01~~	~~–.01~~	~~–.04~~	~~–.06~~
85	.13	.13	.13	.13	.12	.11	.10	.07
86	.13	.13	.13	.13	.11	.10	.09	.06
87	.13	.13	.12	.13	.11	.09	.09	.05
88	~~1.00~~	~~1.00~~	~~1.00~~	~~1.00~~	~~1.00~~	~~1.00~~	~~1.00~~	~~1.00~~

(d) Fuselage and canopy

Orifice No. \ α	–4.0	0.1	4.1	6.2	8.2	10.2	12.2	14.3
1	–0.01	–0.01	–0.01	0.00	0.00	0.00	0.00	0.00
2	.04	.01	.00	–.01	–.01	–.03	–.04	–.05
3	.25	.08	–.07	–.15	–.23	–.29	–.39	–.45
4	.14	.00	–.14	–.21	–.28	–.34	–.42	–.49
5	.10	–.05	–.17	–.23	–.28	–.33	–.41	–.46
6	.08	–.05	–.16	–.22	–.26	–.32	–.39	–.45
7	–.30	–.33	–.37	–.37	–.38	–.39	–.42	–.43
8	–.02	–.13	–.22	–.25	–.28	–.30	–.34	–.35
9	–.38	–.41	–.44	–.44	–.44	–.44	–.47	–.45
10	–.32	–.39	–.42	–.42	–.42	–.43	–.46	–.42
11	–.02	–.01	–.01	–.01	.00	.00	.00	.00
12	–.14	–.17	–.25	–.32	–.37	–.43	–.47	–.50
13	–.36	–.41	–.48	–.52	–.57	–.62	–.68	–.72
14	–.54	–.59	–.64	–.67	–.69	–.72	–.77	–.79
15	–.46	–.52	–.56	–.58	–.58	–.60	–.63	–.65
16	–.37	–.41	–.44	–.46	–.46	–.47	–.50	–.50
17	–.37	–.41	–.42	–.43	–.44	–.45	–.46	–.46

Note: Lines have been drawn through doubtful data.

TABLE 10.- CONCLUDED

(d) Fuselage and canopy (Concluded)

Orifice No. \ α	-4.0	0.1	4.1	6.2	8.2	10.2	12.2	14.3
18	~~0.98~~	~~1.00~~	~~1.00~~	~~1.00~~	~~1.00~~	~~1.00~~	~~1.00~~	~~1.00~~
19	-.14	-.23	-.31	-.32	-.34	-.35	-.38	-.38
20	-.42	-.48	-.51	-.50	-.49	-.49	-.50	-.50
21	-.62	-.64	-.65	-.65	-.65	-.65	-.67	-.67
22	-.55	-.58	-.59	-.59	-.58	-.59	-.60	-.61
23	-.43	-.46	-.49	-.49	-.49	-.50	-.51	-.53
24	-.31	-.36	-.39	-.39	-.38	-.39	-.41	-.43
25	-.24	-.29	-.32	-.32	-.32	-.32	-.34	-.36
26	-.20	-.17	-.14	-.14	-.13	-.13	-.14	-.16
39	.14	.18	.18	.18	.18	.18	.15	.17
40	-.10	-.07	-.09	-.11	-.13	-.14	-.18	-.18
41	-.10	-.10	-.11	-.13	-.14	-.17	-.21	-.23
42	-.16	-.15	-.17	-.19	-.21	-.23	-.28	-.30
43	-.22	-.22	-.24	-.26	-.28	-.30	-.35	-.37
44	-.22	-.25	-.27	-.29	-.30	-.33	-.38	-.39
45	-.32	-.32	-.35	-.37	-.39	-.42	-.48	-.50
46	-.22	-.26	-.32	-.35	-.40	-.46	-.53	-.57
47	-.06	-.22	-.40	-.50	-.62	-.74	-.90	-.99
48	-.18	-.41	-.63	-.76	-.87	-.98	-1.13	-1.18
49	-.20	-.17	-.14	-.14	-.13	-.13	-.14	-.15
50	-.02	-.05	-.11	-.14	-.17	-.21	-.27	-.29
51	-.09	-.12	-.15	-.19	-.21	-.26	-.29	-.32
52	-.13	-.16	-.19	-.22	-.25	-.28	-.33	-.35
53	-.20	-.22	-.26	-.28	-.30	-.34	-.39	-.41
54	-.20	-.17	-.15	-.14	-.13	-.13	-.14	-.16
55	.29	.15	.00	-.08	-.18	-.26	-.38	-.45
56	.04	-.05	-.15	-.21	-.27	-.32	-.41	-.45
57	-.12	-.16	-.23	-.26	-.29	-.33	-.40	-.43
58	-.09	-.14	-.20	-.23	-.28	-.31	-.37	-.41
59	-.19	-.23	-.29	-.32	-.36	-.39	-.45	-.49
60	-.26	-.30	-.35	-.38	-.41	-.45	-.50	-.54
61	.10	.24	.34	.38	.42	.46	.47	.51
62	-.14	-.07	-.04	-.03	-.02	-.02	-.03	-.02
63	-.13	-.08	-.06	-.06	-.06	-.07	-.09	-.09
64	-.20	-.17	-.16	-.17	-.18	-.20	-.23	-.24
65	-.25	-.22	-.22	-.22	-.23	-.24	-.28	-.29
66	-.30	-.28	-.29	-.30	-.31	-.34	-.38	-.39

Note: A line has been drawn through doubtful data.

TABLE 11.– PRESSURE COEFFICIENTS FOR THE AIRPLANE WITH THE SKYHOOK EXTENDED; ψ, 8°

(a) Wing root

Orifice No. \ α	−4.0	0.1	4.1	6.2	8.2	10.2	12.3	14.3
27[a]	0.44	0.09	−0.95	−1.73	−2.76	--	--	--
28[a]	−.12	−.81	−1.77	−2.36	−3.02	--	--	--
29	−.18	−.64	−1.20	−1.52	−1.88	−2.25	−2.57	−2.76
30	−.31	−.61	−.96	−1.14	−1.33	−1.52	−1.70	−1.77
31	−.35	−.56	−.81	−.95	−1.07	−1.19	−1.31	−1.33
32	−.43	−.61	−.83	−.94	−1.04	−1.14	−1.22	−1.28
33	−.44	−.58	−.73	−.82	−.88	−.95	−1.02	−1.12
34	−.46	−.57	−.68	−.75	−.79	−.84	−.89	−1.03
35	−.48	−.54	−.61	−.65	−.68	−.72	−.75	−.93
36	−.42	−.48	−.54	−.58	−.60	−.64	−.67	−.83
37	−.37	−.40	−.43	−.45	−.46	−.48	−.50	−.67
38	−.29	−.30	−.32	−.34	−.34	−.35	−.37	−.51

(b) Upper stabilizer root

Orifice No. \ α	−4.0	0.1	4.1	6.2	8.2	10.2	12.3	14.3
67	~~−0.01~~	~~0.00~~	~~0.02~~	~~0.02~~	~~−0.03~~	~~−0.04~~	~~−0.05~~	~~−0.05~~
68	.12	.12	.11	.11	.10	.09	.07	.05
69	.12	.12	.12	.12	.10	.09	.07	.06
70	.12	.12	.12	.12	.10	.09	.07	.06
71	.13	.13	.12	.12	.11	.10	.08	.07
72	.12	.13	.12	.12	.11	.10	.08	.06
73	.12	.13	.12	.12	.10	.09	.07	.06
74	.11	.13	.12	.12	.10	.09	.07	.06
75	.11	.13	.12	.11	.10	.09	.07	.05
76	.02	−.03	−.07	−.09	−.11	−.11	−.12	−.15
77	~~−.16~~	~~−.06~~	~~.01~~	~~.06~~	~~.13~~	~~.17~~	~~.22~~	~~.27~~

[a]Peak negative pressures exceeded limit of manometers for $\alpha \geqq 10°$.

Note: Lines have been drawn through doubtful data.

TABLE 11.– CONTINUED

(c) Lower stabilizer root

Orifice No. \ α	–4.0	0.1	4.1	6.2	8.2	10.2	12.3	14.3
78	0.12	0.12	0.11	0.10	0.10	0.11	0.11	0.06
79	.12	.12	.11	.10	.10	.11	.11	.06
80	.11	.12	.10	.10	.10	.11	.10	.06
81	.11	.12	.10	.09	.09	.10	.10	.05
82	.11	.11	.10	.09	.09	.10	.09	.05
83	~~.28~~	~~.27~~	~~.25~~	~~.25~~	~~.25~~	~~.25~~	~~.24~~	~~.23~~
84	~~–.05~~	~~–.04~~	~~–.05~~	~~–.05~~	~~–.06~~	~~–.06~~	~~–.08~~	~~–.10~~
85	.11	.12	.10	.08	.08	.10	.09	.05
86	.11	.12	.09	.08	.08	.09	.08	.05
87	.10	.11	.09	.08	.08	.09	.08	.05
88	~~1.00~~	~~1.00~~	~~1.00~~	~~1.00~~	~~1.00~~	~~1.00~~	~~1.00~~	~~1.00~~

(d) Fuselage and canopy

Orifice No. \ α	–4.0	0.1	4.1	6.2	8.2	10.2	12.3	14.3
1	–0.02	–0.01	–0.01	–0.01	–0.01	–0.01	0.00	–0.01
2	.02	.01	–.01	–.02	–.03	–.04	–.05	–.07
3	.22	.07	–.11	–.19	–.28	–.36	–.46	–.54
4	.09	–.05	–.18	–.25	–.33	–.41	–.48	–.55
5	.01	–.10	–.23	–.29	–.35	–.42	–.47	–.53
6	.01	–.09	–.21	–.27	–.32	–.38	–.44	–.49
7	–.42	–.51	–.59	–.62	–.59	–.60	–.60	–.59
8	–.13	–.24	–.33	–.37	–.39	–.41	–.43	–.44
9	–.55	–.63	–.68	–.70	–.68	–.67	–.67	–.66
10	–.55	–.55	–.65	–.68	–.68	–.69	–.70	–.69
11	–.02	–.01	–.01	–.01	–.01	.00	.00	.00
12	–.48	–.45	–.46	–.52	–.59	–.63	–.65	–.65
13	–.65	–.73	–.75	–.79	–.84	–.88	–.91	–.91
14	–.75	–.82	–.86	–.90	–.93	–.95	–.96	–.96
15	–.61	–.66	–.68	–.72	–.74	–.75	–.76	–.76
16	–.48	–.51	–.53	–.56	–.58	–.58	–.58	–.58
17	–.48	–.49	–.50	–.53	–.53	–.54	–.54	–.54
18	~~.96~~	~~–.98~~	~~.99~~	~~1.00~~	~~1.00~~	~~1.00~~	~~1.00~~	~~1.00~~
19	–.14	–.14	–.36	–.40	–.42	–.45	–.46	–.48
20	–.47	–.54	–.62	–.64	–.61	–.60	–.59	–.60

Note: Lines have been drawn through doubtful data.

TABLE 11.– CONCLUDED

(d) Fuselage and canopy (Concluded)

Orifice No. \ α	-4.0	0.1	4.1	6.2	8.2	10.2	12.3	14.3
21	-0.75	-0.76	-0.77	-0.78	-0.75	-0.75	-0.74	-0.74
22	-.65	-.65	-.66	-.67	-.65	-.65	-.65	-.66
23	-.50	-.50	-.52	-.54	-.52	-.53	-.54	-.56
24	-.35	-.36	-.40	-.41	-.41	-.41	-.42	-.45
25	-.26	-.28	-.31	-.33	-.32	-.34	-.43	-.37
26	-.18	-.15	-.14	-.15	-.14	-.15	-.15	-.19
39	-.22	-.18	-.17	-.17	-.16	-.17	-.17	-.16
40	-.32	-.28	-.30	-.33	-.34	-.36	-.39	-.40
41	-.26	-.25	-.26	-.29	-.21	-.34	-.36	-.38
42	-.30	-.28	-.31	-.33	-.34	-.37	-.41	-.43
43	-.35	-.33	-.36	-.38	-.41	-.44	-.46	-.49
44	-.37	-.35	-.38	-.40	-.42	-.45	-.48	-.51
45	-.42	-.41	-.44	-.47	-.50	-.54	-.57	-.60
46	-.29	-.31	-.38	-.43	-.48	-.52	-.61	-.65
47	-.14	-.27	-.47	-.58	-.72	-.85	-.98	-1.07
48	-.25	-.45	-.69	-.83	-.96	-1.08	-1.20	-1.23
49	-.18	-.15	-.14	-.15	-.14	-.15	-.15	-.19
50	-.22	-.25	-.31	-.35	-.38	-.42	-.45	-.47
51	-.25	-.26	-.31	-.35	-.37	-.40	-.43	-.45
52	-.28	-.28	-.32	-.35	-.38	-.41	-.45	-.47
53	-.33	-.32	-.37	-.40	-.42	-.45	-.49	-.51
54	-.18	-.15	-.14	-.15	-.14	-.15	-.15	-.19
55	.01	-.14	-.32	-.42	-.52	-.63	-.73	-.79
56	-.15	-.23	-.33	-.41	-.46	-.53	-.57	-.61
57	-.27	-.30	-.36	-.40	-.43	-.47	-.52	-.55
58	-.23	-.25	-.32	-.35	-.39	-.44	-.47	-.51
59	-.32	-.34	-.40	-.44	-.47	-.51	-.55	-.57
60	-.38	-.41	-.44	-.48	-.51	-.55	-.58	-.61
61	-.24	-.08	.04	-.08	.14	.18	.21	.24
62	-.35	-.28	-.23	-.24	-.23	-.23	-.24	-.23
63	-.27	-.23	-.22	-.23	-.23	-.24	-.25	-.26
64	-.33	-.29	-.30	-.32	-.32	-.35	-.37	-.39
65	-.37	-.33	-.34	-.35	-.37	-.39	-.41	-.43
66	-.41	-.38	-.40	-.42	-.44	-.46	-.50	-.52

TABLE 12.– PRESSURE COEFFICIENTS FOR THE AIRPLANE WITH THE SKYFOOK EXTENDED; α, 0.1°

(a) Wing root

Orifice No. \ ψ	-12	-8	-6	-4	-2	0	2	4	6	8	12
27	0.60	0.59	0.56	0.52	0.50	0.41	0.30	0.24	0.13	0.10	-0.28
28	.26	.05	-.11	-.17	-.22	-.41	-.56	-.64	-.76	-.79	-1.16
29	.13	-.05	-.16	-.22	-.25	-.37	-.49	-.54	-.61	-.63	-.84
30	-.05	-.19	-.28	-.32	-.35	-.44	-.51	-.55	-.61	-.61	-.74
31	-.14	-.25	-.32	-.35	-.38	-.45	-.50	-.52	-.56	-.57	-.65
32	-.23	-.34	-.41	-.44	-.46	-.52	-.58	-.64	-.62	-.62	-.69
33	-.27	-.37	-.42	-.45	-.47	-.51	-.55	-.57	-.59	-.59	-.63
34	-.34	-.43	-.47	-.50	-.51	-.54	-.60	-.61	-.62	-.61	-.65
35	-.33	-.41	-.45	-.47	-.48	-.51	-.54	-.54	-.55	-.55	-.56
36	-.28	-.36	-.39	-.41	-.42	-.45	-.48	-.49	-.49	-.48	-.50
37	-.26	-.32	-.34	-.36	-.37	-.38	-.41	-.41	-.41	-.40	-.40
38	-.20	-.24	-.27	-.28	-.28	-.29	-.31	-.31	-.31	-.30	-.30

(b) Upper stabilizer root

Orifice No. \ ψ	-12	-8	-6	-4	-2	0	2	4	6	8	12
67	~~0.06~~	~~0.09~~	~~0.12~~	~~0.15~~	~~0.16~~	~~0.22~~	~~0.03~~	~~0.02~~	~~0.03~~	~~0.04~~	~~0.02~~
68	.13	.13	.13	.13	.14	.15	.14	.13	.13	.13	.12
69	.13	.14	.13	.14	.15	.16	.15	.13	.13	.13	.12
70	.13	.14	.14	.14	.15	.16	.15	.13	.13	.13	.12
71	.13	.14	.14	.14	.15	.16	.15	.13	.14	.13	.13
72	.12	.14	.13	.13	.14	.16	.15	.13	.13	.13	.12
73	.12	.13	.12	.13	.14	.15	.14	.12	.13	.12	.12
74	.12	.13	.12	.13	.14	.15	.14	.12	.13	.12	.12
75	.12	.13	.12	.13	.14	.15	.14	.12	.13	.12	.11
76	-.07	-.05	-.03	-.02	-.02	.00	.03	.03	.00	-.03	-.08
77	~~-.26~~	~~-.12~~	~~-.01~~	~~.05~~	~~.08~~	~~.11~~	~~.10~~	~~.06~~	~~.01~~	~~-.06~~	~~-.25~~

Note: Lines have been drawn through doubtful data.

TABLE 12.– CONTINUED

(c) Lower stabilizer root

Orifice No. \ ψ	-12	-8	-6	-4	-2	0	2	4	6	8	12
78	0.02	0.06	0.07	0.09	0.10	0.12	0.13	0.11	0.14	0.13	-0.07
79	.02	.06	.07	.09	.10	.12	.14	.11	.13	.13	.07
80	.02	.06	.07	.09	.11	.12	.14	.11	.13	.13	.07
81	.02	.06	.08	.09	.11	.13	.14	.11	.12	.12	.06
82	.02	.06	.08	.09	.11	.13	.15	.11	.12	.12	.06
83	~~.18~~	~~.22~~	~~.23~~	~~.25~~	~~.27~~	~~.31~~	~~.16~~	~~.17~~	~~.17~~	~~.18~~	~~.17~~
84	.01	.04	.05	.08	.11	.15	.01	.00	.00	.01	-.01
85	.02	.06	.08	.10	.11	.13	.15	.12	.12	.12	.06
86	.02	.06	.08	.10	.11	.13	.15	.12	.12	.12	.06
87	.02	.06	.08	.10	.11	.13	.15	.12	.11	.12	.06
88	~~1.00~~	~~1.00~~	~~1.00~~	~~1.00~~	~~1.00~~	~~1.00~~	~~1.00~~	~~1.00~~	~~1.00~~	~~1.00~~	~~1.00~~

(d) Fuselage and canopy

Orifice No. \ ψ	-12	-8	-6	-4	-2	0	2	4	6	8	12
1	0.00	0.00	-0.01	-0.01	-0.01	-0.01	-0.02	-0.02	-0.02	-0.02	-0.01
2	.04	.03	.02	.02	.03	.02	.00	.00	.00	.00	-.01
3	.04	.07	.07	.09	.12	.10	.08	.08	.07	.07	-.03
4	-.08	-.04	-.04	-.01	.01	.00	.00	-.01	-.02	-.05	-.14
5	-.08	-.04	-.03	-.01	.01	.00	-.03	-.06	-.07	-.10	-.21
6	-.10	-.05	-.05	-.03	-.01	-.03	-.05	-.06	-.07	-.09	-.18
7	-2.21	-.85	-.59	-.52	-.39	-.29	-.28	-.35	-.45	-.52	-.73
8	-.38	-.27	-.22	-.17	-.10	-.07	-.08	-.14	-.19	-.25	-.36
9	-.90	-.64	-.55	-.49	-.37	-.29	-.32	-.42	-.55	-.64	-.83
10	-.78	-.54	-.44	-.41	-.33	-.22	-.29	-.39	-.48	-.57	-.72
11	.00	-.01	-.02	-.01	-.01	-.01	-.02	-.02	-.02	-.02	-.01
12	-.66	-.58	-.37	-.24	-.20	-.16	-.20	-.18	-.24	-.47	-.63
13	-.87	-.81	-.65	-.47	-.40	-.38	-.39	-.42	-.54	-.73	-.82
14	-.90	-.83	-.73	-.60	-.53	-.50	-.55	-.60	-.70	-.84	-.92
15	-.77	-.67	-.60	-.53	-.49	-.46	-.50	-.53	-.58	-.67	-.77
16	-.65	-.53	-.49	-.41	-.40	-.38	-.40	-.42	-.45	-.52	-.64
17	-.65	-.51	-.45	-.41	-.38	-.36	-.39	-.40	-.43	-.50	-.59
18	~~-.96~~	~~.99~~	~~.99~~	~~1.00~~	~~1.00~~	~~1.00~~	~~1.00~~	~~1.00~~	~~1.00~~	~~.98~~	~~-.94~~

Note: Lines have been drawn through doubtful data.

TABLE 12.- CONCLUDED

(d) Fuselage and canopy (Concluded)

Orifice No. \ ψ	-12	-8	-6	-4	-2	0	2	4	6	8	12
19	0.00	0.06	0.13	0.14	0.14	0.03	-0.17	-0.24	-0.26	-0.18	-0.77
20	-.09	-.20	-.24	-.28	-.30	-.32	-.40	-.49	-.55	-.56	-.94
21	-.30	-.41	-.47	-.51	-.53	-.56	-.61	-.65	-.72	-.76	-.93
22	-.31	-.39	-.43	-.46	-.48	-.50	-.55	-.58	-.63	-.66	-.76
23	-.33	-.37	-.40	-.40	-.40	-.42	-.45	-.47	-.50	-.50	-.64
24	-.29	-.30	-.31	-.31	-.30	-.31	-.35	-.37	-.38	-.37	-.47
25	-.38	-.33	-.32	-.30	-.28	-.28	-.28	-.29	-.29	-.28	-.35
26	-.22	-.19	-.18	-.18	-.17	-.16	-.17	-.17	-.16	-.15	-.15
39	.98	.88	.79	.70	.60	.47	.31	.17	-.01	-.17	-.59
40	.64	.49	.39	.31	.23	.13	.02	-.08	-.18	-.28	-.50
41	.50	.35	.27	.20	.14	.06	-.03	-.10	-.18	-.25	-.41
42	.39	.25	.18	.11	.05	-.02	-.10	-.16	-.23	-.28	-.41
43	.30	.16	.09	.03	-.03	-.09	-.17	-.23	-.28	-.33	-.46
44	.22	.10	.03	-.04	-.08	-.14	-.21	-.27	-.31	-.36	-.46
45	.12	.00	-.06	-.12	-.17	-.22	-.28	-.33	-.38	-.40	-.50
46	.07	-.02	-.07	-.12	-.14	-.18	-.23	-.26	-.29	-.31	-.38
47	.14	.04	-.03	-.06	-.08	-.14	-.19	-.22	-.26	-.27	-.36
48	-.03	-.14	-.21	-.24	-.26	-.33	-.39	-.41	-.45	-.46	-.55
49	-.22	-.19	-.18	-.18	-.17	-.16	-.17	-.17	-.16	-.15	-.15
50	.64	.49	.40	.32	.24	.14	.03	-.06	-.15	-.25	-.48
51	.48	.33	.25	.18	.13	.05	-.05	-.12	-.20	-.27	-.43
52	.38	.24	.17	.11	.05	-.02	-.10	-.17	-.23	-.28	-.42
53	.30	.16	.09	.03	-.03	-.09	-.17	-.23	-.28	-.33	-.45
54	-.22	-.19	-.18	-.18	.17	-.16	-.17	-.17	-.16	-.16	-.15
55	.92	.80	.71	.63	.55	.42	.28	.15	.00	-.13	-.52
56	.60	.47	.38	.31	.24	.14	.03	-.06	-.15	-.23	-.45
57	.40	.26	.19	.12	.06	-.02	-.10	-.17	-.24	-.30	-.46
58	.36	.24	.17	.11	.06	-.01	-.09	-.15	-.21	-.26	-.39
59	.26	.14	.06	.01	-.04	-.11	-.18	-.24	-.29	-.34	-.47
60	.17	.05	-.02	-.07	-.12	-.18	-.25	-.30	-.35	-.39	-.50
61	.96	.87	.79	.70	.61	.51	.37	.23	.08	-.08	-.44
62	.61	.47	.38	.29	.22	.12	.01	-.08	-.18	-.28	-.50
63	.46	.33	.27	.20	.14	.07	-.02	-.09	-.17	-.23	-.39
64	.35	.23	.16	.09	.04	-.03	-.11	-.17	-.24	-.29	-.43
65	.28	.15	.09	.02	-.04	-.09	-.17	-.23	-.28	-.34	-.46
66	.18	.06	.00	-.06	-.11	--	-.24	-.29	-.34	-.39	-.49

TABLE 13.- PRESSURE COEFFICIENTS FOR THE AIRPLANE WITH THE SKYHOOK EXTENDED; α, 6.2°

(a) Wing root

Orifice No. \ ψ	-12	-8	-6	-4	-2	0	2	4	6	8	12
27	0.19	-0.14	-0.22	-0.48	-0.68	-0.90	-1.06	-1.41	-1.54	-1.85	-2.45
28	-.73	-1.09	-1.18	-1.41	-1.58	-1.76	-1.89	-2.13	-2.22	-2.42	-2.81
29	-.54	-.76	-.82	-.96	-1.06	-1.17	-1.25	-1.38	-1.44	-1.55	-1.76
30	-.55	-.65	-.70	-.79	-.86	-.92	-.98	-1.05	-1.09	-1.15	-1.27
31	-.47	-.59	-.62	-.69	-.74	-.79	-.83	-.88	-.90	-.96	-1.04
32	-.52	-.63	-.66	-.73	-.77	-.81	-.85	-.88	-.90	-.94	-1.00
33	-.50	-.59	-.61	-.67	-.70	-.73	-.76	-.78	-.79	-.82	-.85
34	-.52	-.60	-.62	-.68	-.70	-.72	-.75	-.75	-.77	-.78	-.81
35	-.45	-.51	-.54	-.57	-.59	-.61	-.63	-.62	-.63	-.65	-.66
36	-.39	-.45	-.46	-.50	-.52	-.54	-.56	-.55	-.56	-.58	-.59
37	-.33	-.37	-.38	-.41	-.42	-.44	-.45	-.45	-.45	-.45	-.45
38	-.24	-.26	-.28	-.30	-.31	-.31	-.32	-.32	-.33	-.33	-.34

(b) Upper stabilizer root

Orifice No. \ ψ	-12	-8	-6	-4	-2	0	2	4	6	8	12
67	~~0.00~~	~~0.08~~	~~0.11~~	~~0.14~~	~~0.18~~	~~0.26~~	~~-0.05~~	~~-0.05~~	~~-0.04~~	~~-0.05~~	~~-0.05~~
68	.11	.13	.10	.11	.14	.16	.14	.14	.12	.10	.10
69	.11	.13	.10	.11	.15	.16	.14	.14	.12	.11	.10
70	.11	.13	.10	.11	.15	.16	.14	.14	.12	.11	.10
71	.11	.13	.10	.12	.16	.16	.15	.14	.11	.12	.10
72	.11	.12	.09	.11	.15	.16	.14	.14	.11	.12	.10
73	.10	.12	.08	.10	.14	.15	.14	.14	.12	.11	.10
74	.10	.12	.08	.10	.14	.15	.14	.14	.12	.11	.09
75	.10	.12	.08	.09	.14	.15	.14	.14	.12	.10	.08
76	-.13	-.10	-.09	-.07	-.04	-.08	-.06	-.04	-.07	-.11	-.14
77	~~-.06~~	~~.06~~	~~.13~~	~~.21~~	~~.24~~	~~.26~~	~~.24~~	~~.21~~	~~-.16~~	~~.06~~	~~-.09~~

Note: Lines have been drawn through doubtful data.

TABLE 13.– CONTINUED

(c) Lower stabilizer root

Orifice No. \ ψ	−12	−8	−6	−4	−2	0	2	4	6	8	12
78	0.01	0.05	0.06	0.09	0.06	0.09	0.14	0.14	0.12	0.09	0.06
79	.02	.05	.06	.09	.06	.09	.14	.14	.11	.09	.06
80	.02	.05	.06	.09	.05	.08	.14	.13	.11	.08	.06
81	.02	.05	.06	.09	.05	.07	.14	.13	.10	.08	.05
82	.02	.05	.06	.09	.05	.07	.13	.12	.09	.07	.05
83	~~.14~~	~~.21~~	~~.22~~	~~.25~~	~~.28~~	~~.33~~	~~.09~~	~~.12~~	~~.13~~	~~.12~~	~~.12~~
84	~~−.07~~	~~.02~~	~~.00~~	~~.04~~	~~.07~~	~~.17~~	~~−.07~~	~~−.07~~	~~−.05~~	~~−.07~~	~~−.07~~
85	.01	.05	.06	.09	.06	.08	.13	.13	.09	.08	.05
86	.01	.05	.06	.09	.06	.08	.13	.12	.09	.07	.05
87	.01	.04	.06	.09	.06	.06	.12	.12	.08	.07	.05
88	~~.90~~	~~1.00~~	~~1.00~~	~~1.00~~	~~1.00~~	~~1.00~~	~~1.00~~	~~1.00~~	~~1.00~~	~~1.00~~	~~1.00~~

(d) Fuselage and canopy

Orifice No. \ ψ	−12	−8	−6	−4	−2	0	2	4	6	8	12
1	−0.01	0.00	0.00	−0.01	0.00	0.00	−0.01	0.00	0.00	0.00	−0.01
2	.00	.01	.01	.00	.00	.00	−.01	−.01	−.01	−.01	−.03
3	−.18	−.14	−.13	−.13	−.13	−.13	−.14	−.15	−.17	−.20	−.27
4	−.27	−.22	−.20	−.19	−.20	−.20	−.21	−.21	−.23	−.26	−.35
5	−.26	−.20	−.17	−.17	−.18	−.19	−.21	−.22	−.25	−.30	−.38
6	−.27	−.21	−.19	−.18	−.19	−.19	−.20	−.21	−.23	−.27	−.35
7	−1.90	−.96	−.70	−.55	−.42	−.31	−.32	−.37	−.49	−.61	−.82
8	−.51	−.41	−.35	−.32	−.26	−.21	−.22	−.25	−.31	−.37	−.47
9	−.88	−.69	−.62	−.53	−.43	−.33	−.36	−.44	−.57	−.69	−.86
10	−.92	−.67	−.54	−.47	−.38	−.21	−.29	−.42	−.52	−.66	−.84
11	−.01	.00	.00	−.01	.00	.00	−.01	.00	.00	.00	−.01
12	−.82	−.59	−.40	−.33	−.34	−.24	−.35	−.29	−.34	−.53	−.79
13	−1.05	−.88	−.67	−.56	−.54	−.46	−.52	−.51	−.60	−.79	−.97
14	−1.05	−.91	−.76	−.67	−.62	−.55	−.64	−.65	−.73	−.90	−1.05
15	−.86	−.73	−.62	−.58	−.54	−.50	−.55	−.56	−.62	−.72	−.85
16	−.71	−.57	−.48	−.46	−.45	−.42	−.45	−.45	−.47	−.56	−.69

Note: Lines have been drawn through doubtful data.

TABLE 13.– CONCLUDED

(d) Fuselage and canopy (Concluded)

Orifice No. \ ψ	−12	−8	−6	−4	−2	0	2	4	6	8	12
17	−0.68	−0.53	−0.46	−0.43	−0.42	−0.38	−0.42	−0.42	−0.45	−0.52	−0.66
18	~~.99~~	~~1.00~~	~~1.00~~	~~1.00~~	~~1.00~~	~~1.00~~	~~1.00~~	~~1.00~~	~~1.00~~	~~1.00~~	~~.96~~
19	−.17	−.05	.02	.02	−.02	−.09	−.26	−.32	−.37	−.40	−.85
20	−.20	−.28	−.30	−.34	−.37	−.40	−.44	−.49	−.57	−.62	−.75
21	−.39	−.49	−.51	−.56	−.58	−.60	−.62	−.63	−.70	−.76	−.81
22	−.40	−.46	−.47	−.50	−.53	−.54	−.56	−.57	−.61	−.66	−.71
23	−.45	−.46	−.45	−.46	−.46	−.46	−.48	−.48	−.50	−.52	−.61
24	−.40	−.39	−.37	−.37	−.37	−.37	−.38	−.38	−.39	−.41	−.46
25	−.50	−.43	−.39	−.37	−.35	−.33	−.32	−.31	−.31	−.32	−.38
26	−.17	−.14	−.13	−.14	−.13	−.13	−.14	−.13	−.13	−.14	−.15
39	.97	.87	.80	.71	.60	.46	.33	.19	.02	−.17	−.56
40	.61	.46	.38	.29	.20	.09	−.01	−.11	−.21	−.32	−.55
41	.46	.32	.26	.17	.10	.03	−.06	−.13	−.20	−.29	−.45
42	.34	.22	.16	.08	.02	−.05	−.13	−.19	−.25	−.32	−.46
43	.25	.13	.07	.00	−.06	−.13	−.20	−.25	−.31	−.38	−.50
44	.19	.07	.03	−.05	−.11	−.17	−.23	−.28	−.34	−.40	−.51
45	.07	−.04	−.08	−.15	−.21	−.26	−.32	−.37	−.41	−.47	−.59
46	−.01	−.10	−.13	−.20	−.24	−.28	−.32	−.36	−.38	−.43	−.50
47	−.11	−.22	−.25	−.32	−.37	−.42	−.47	−.51	−.54	−.59	−.68
48	−.35	−.47	−.50	−.57	−.62	−.67	−.71	−.76	−.79	−.84	−.92
49	−.17	−.14	−.13	−.14	−.12	−.13	−.14	−.13	−.13	−.14	−.15
50	−.54	.40	.32	.23	.13	.04	−.05	−.13	−.23	−.34	−.55
51	.38	.24	.19	.10	.03	−.04	−.13	−.20	−.25	−.34	−.50
52	.28	.16	.12	.04	−.03	−.09	−.16	−.21	−.28	−.35	−.48
53	.20	.08	.03	−.05	−.10	−.16	−.23	−.28	−.33	−.40	−.50
54	−.17	−.14	−.13	−.14	−.13	−.13	−.14	−.13	−.13	−.14	−.15
55	.78	.64	.56	.45	.32	.20	.05	−.10	−.25	−.43	−.81
56	.43	.30	.23	.14	.05	−.03	−.13	−.21	−.30	−.41	−.59
57	.26	.14	.08	.01	−.05	−.13	−.20	−.26	−.32	−.40	−.55
58	.21	.11	.06	−.01	−.06	−.12	−.18	−.23	−.29	−.35	−.47
59	.12	.01	−.04	−.10	−.16	−.21	−.28	−.32	−.37	−.43	−.55
60	.04	−.07	−.11	−.18	−.23	−.28	−.33	−.37	−.43	−.48	−.57
61	1.00	.94	.88	.81	.72	.62	.50	.38	.25	.09	−.24
62	.66	.52	.45	.36	.27	.17	−.07	−.02	−.13	−.23	−.45
63	.51	.39	.32	.24	.18	.10	−.02	−.05	−.13	−.22	−.38
64	.38	.25	.19	.12	.04	−.03	−.10	−.17	−.24	−.32	−.45
65	.29	.18	.12	.05	−.02	−.09	−.16	−.21	−.29	−.35	−.48
66	.19	.07	.02	−.05	−.12	−.18	−.24	−.29	−.36	−.40	−.54

Note: A line has been drawn through doubtful data.

TABLE 14.– PRESSURE COEFFICIENT FOR THE AIRPLANE WITH THE SKYHOOK EXTENDED; α, 12.3°

(a) Wing root

Orifice No. \ ψ	-12	-8	-6	-4	-2	0	2	4	6	8	12
27[a]	-1.69	-2.27	-2.73	-2.98	--	--	--	--	--	--	--
28[a]	-2.25	-2.68	-2.95	-3.13	--	--	--	--	--	--	--
29	-1.36	-1.63	-1.79	-1.90	-2.05	-2.18	-2.28	-2.46	-2.50	-2.62	-2.75
30	-.96	-1.14	-1.23	-1.30	-1.38	-1.47	-1.53	-1.61	-1.65	-1.72	-1.81
31	-.79	-.93	-.98	-1.04	-1.10	-1.16	-1.20	-1.25	-1.28	-1.32	-1.36
32	-.78	-.90	-.95	-1.00	-1.05	-1.10	-1.14	-1.17	-1.20	-1.24	-1.27
33	-.68	-.78	-.81	-.85	-.89	-.94	-.96	.98	-1.01	-1.04	-1.07
34	-.67	-.75	-.77	-.81	-.84	-.87	-.88	-.90	-.92	-.94	-.99
35	-.51	-.60	-.62	-.65	-.67	-.71	-.73	-.74	-.76	-.78	-.83
36	-.44	-.51	-.54	-.57	-.59	-.63	-.64	-.66	-.67	-.69	-.73
37	-.34	-.40	-.42	-.44	-.45	-.48	-.49	-.50	-.50	-.52	-.56
38	-.23	-.28	-.29	-.32	-.33	-.35	-.36	-.37	-.38	-.39	-.43

(b) Upper stabilizer root

Orifice No. \ ψ	-12	-8	-6	-4	-2	0	2	4	6	8	12
67	~~-0.11~~	~~-0.07~~	~~-0.10~~	~~-0.10~~	~~-0.09~~	~~-0.08~~	~~0.04~~	~~0.03~~	~~0.00~~	~~-0.02~~	~~-0.04~~
68	.06	.09	.08	.10	.13	.14	.12	.10	.07	.06	.05
69	.06	.10	.09	.11	.14	.14	.12	.10	.08	.07	.05
70	.06	.10	.09	.11	.14	.15	.12	.10	.08	.07	.05
71	.06	.11	.10	.12	.14	.15	.12	.11	.08	.07	.05
72	.05	.10	.09	.11	.14	.14	.12	.10	.08	.07	.05
73	.05	.09	.09	.10	.13	.14	.11	.10	.08	.06	.05
74	.05	.09	.08	.10	.13	.14	.12	.10	.08	.06	.05
75	.04	.09	.08	.10	.12	.14	.12	.10	.08	.06	.04
76	-.20	-.09	-.09	-.08	-.08	-.10	-.06	-.10	-.12	-.14	-.19
77	~~.11~~	~~.26~~	~~.30~~	~~.34~~	~~.38~~	~~.40~~	~~.37~~	~~.35~~	~~-.12~~	~~.22~~	~~.08~~

[a]Peak negative pressures exceeded limits of manometers for $\psi \geqq -2^{\circ}$.

Note: Lines have been drawn through doubtful data.

TABLE 14.– CONTINUED

(c) Lower stabilizer root

Orifice No. \ ψ	−12	−8	−6	−4	−2	0	2	4	6	8	12
78	−0.05	0.04	0.04	0.06	0.08	0.13	0.13	0.12	0.10	0.09	0.05
79	−.05	.04	.04	.06	.08	.13	.13	.12	.10	.09	.05
80	−.05	.04	.04	.06	.08	.13	.12	.11	.09	.09	.05
81	−.05	.04	.04	.06	.07	.13	.12	.11	.09	.08	.05
82	−.05	.04	.04	.06	.07	.12	.11	.10	.09	.08	.05
83	~~.06~~	~~.12~~	~~.11~~	~~.11~~	~~.12~~	~~.12~~	~~.20~~	~~.20~~	~~.18~~	~~.16~~	~~.15~~
84	~~−.14~~	~~−.09~~	~~−.11~~	~~−.11~~	~~−.10~~	~~−.10~~	~~−.09~~	~~−.09~~	~~−.11~~	~~−.12~~	~~−.14~~
85	−.04	.04	.03	.06	.08	.12	.12	.10	.09	.08	.04
86	−.04	.04	.03	.06	.08	.12	.11	.09	.08	.07	.04
87	−.04	.04	.03	.06	.08	.12	.10	.09	.08	.07	.04
88	~~1.00~~	~~1.00~~	~~1.00~~	~~1.00~~	~~1.00~~	~~1.00~~	~~1.00~~	~~1.00~~	~~1.00~~	~~1.00~~	~~1.00~~

Note: Lines have been drawn through doubtful data.

TABLE 14.– CONTINUED

(d) Fuselage and canopy

Orifice No. \ ψ	–12	–8	–6	–4	–2	0	2	4	6	8	12
1	0.00	0.00	0.01	0.00	0.00	–0.01	0.00	0.00	0.00	0.00	0.00
2	–.02	–.02	–.01	–.02	–.02	–.03	–.03	–.03	–.04	–.03	–.08
3	–.40	–.37	–.35	–.35	–.36	–.26	–.38	–.40	–.42	–.47	–.53
4	–.44	–.41	–.40	–.40	–.40	–.39	–.41	–.44	–.46	–.49	–.57
5	–.42	–.37	–.35	–.36	–.37	–.38	–.40	–.42	–.43	–.48	–.56
6	–.43	–.38	–.36	–.35	–.36	–.37	–.38	–.40	–.41	–.45	–.54
7	–1.51	–.94	–.65	–.52	–.42	–.35	–.37	–.42	–.50	–.59	–.80
8	–.59	–.48	–.42	–.37	–.33	–.30	–.32	–.34	–.39	–.43	–.52
9	–.89	–.71	–.60	–.50	–.40	–.35	–.38	–.46	–.56	–.66	–.87
10	–1.06	–.72	–.57	–.47	–.34	–.23	–.28	–.46	–.58	–.69	–.91
11	.00	.00	.01	.00	.01	.00	.00	.00	.00	.00	.00
12	–.87	–.62	–.52	–.45	–.43	–.32	–.41	–.48	–.53	–.65	–.88
13	–1.11	–.90	–.76	–.68	–.66	–.54	–.63	–.68	–.76	–.92	–1.07
14	–1.09	–.94	–.81	–.74	–.71	–.62	–.71	–.77	–.84	–.97	–1.11
15	–.88	–.75	–.66	–.62	–.59	–.55	–.59	–.63	–.68	–.76	–.88
16	–.70	–.58	–.52	–.48	–.47	–.45	–.48	–.50	–.52	–.59	–.70
17	–.65	–.53	–.48	–.45	–.44	–.41	–.44	–.46	–.49	–.54	–.65
18	~~.99~~	~~1.00~~	~~1.00~~	~~1.00~~	~~1.00~~	~~1.00~~	~~1.00~~	~~1.00~~	~~1.00~~	~~1.00~~	~~.97~~
19	–.27	–.17	–.13	–.11	–.13	–.20	–.30	–.38	–.32	–.46	–.77
20	–.28	–.35	–.36	–.40	–.43	–.47	–.49	–.50	–.56	–.59	–.65
21	–.44	–.53	–.55	–.59	–.62	–.65	–.66	–.67	–.70	–.73	–.75
22	–.45	–.50	–.52	–.55	–.56	–.59	–.59	–.60	–.62	–.65	–.67
23	–.51	–.52	–.51	–.51	–.52	–.52	–.51	–.51	–.52	–.54	–.58
24	–.47	–.45	–.43	–.42	–.42	–.42	–.41	–.41	–.41	–.43	–.46
25	–.56	–.50	–.45	–.43	–.41	–.38	–.36	–.34	–.34	–.35	–.39
26	–.15	–.15	–.13	–.13	–.13	–.14	–.14	–.14	–.15	–.16	–.18
39	.89	.80	.75	.66	.56	.43	.29	.15	–.01	–.26	–.52
40	.53	.38	.30	.21	.12	.01	–.09	–.19	–.29	–.39	–.59
41	.39	.24	.17	.10	.03	.06	–.14	–.22	–.29	–.36	–.51
42	.27	.13	.06	.00	–.07	–.15	–.22	–.28	–.34	–.41	–.53
43	.17	.04	–.03	–.09	–.15	–.23	–.30	–.35	–.41	–.46	–.57
44	.14	.00	–.06	–.13	–.19	–.26	–.32	–.38	–.43	–.49	–.58
45	.01	–.13	–.19	–.25	–.21	–.37	–.43	–.48	–.53	–.57	–.65
46	–.13	–.25	–.30	–.35	–.40	–.45	–.50	–.54	–.58	–.62	–.66
47	–.42	–.55	–.62	–.68	–.75	–.81	–.86	–.93	–.95	–1.00	–1.06
48	–.67	–.80	–.86	–.92	–.07	–1.05	–1.09	–1.14	–1.17	–1.21	–1.25
49	–.15	–.15	–1.04	–.13	–.13	–.14	–.14	–.14	–.15	–.16	–.18

Note: A line has been drawn through doubtful data.

TABLE 14.– CONCLUDED

(d) Fuselage and canopy (Concluded)

Orifice No. \ ψ	–12	–8	–6	–4	–2	0	2	4	6	8	12
50	0.40	0.26	0.18	0.10	0.01	–0.09	–0.18	–0.28	–0.35	–0.45	–0.64
51	.26	.13	.06	–.10	–.08	–.15	–.23	–.30	–.36	–.44	–.57
52	.16	.04	–.03	–.09	–.15	–.22	–.27	–.33	–.39	–.45	–.55
53	.08	–.04	–.10	–.15	–.22	–.28	–.34	–.39	–.44	–.49	–.58
54	–.14	–.15	–.13	–.13	–.13	–.14	–.14	–.12	–.15	–.16	–.18
55	.57	.42	.32	.20	.06	–.08	–.23	–.41	–.55	–.74	–1.08
56	.23	.10	.03	–.05	–.14	–.24	–.32	–.41	–.50	–.58	–.74
57	.09	–.03	–.08	–.15	–.21	–.28	–.34	–.41	–.46	–.52	–.63
58	.05	–.06	–.11	–.16	–.22	–.27	–.32	–.38	–.42	–.48	–.56
59	–.05	–.16	–.20	–.25	–.31	–.36	–.41	–.46	–.50	–.55	–.63
60	–.12	–.22	–.27	–.32	–.37	–.43	–.47	–.51	–.55	–.59	–.65
61	.98	.93	.90	.84	.77	.67	.58	.47	.34	.22	–.07
62	.67	.51	.45	.35	.27	.16	.06	–.03	–.14	–.23	–.44
63	.51	.37	.30	.23	.15	.06	–.02	–.09	–.17	–.25	–.41
64	.36	.21	.15	.07	.00	–.08	–.16	–.23	–.31	–.37	–.51
65	.29	.15	.07	.01	–.06	–.05	–.22	–.28	–.35	–.41	–.54
66	.17	.03	–.05	–.11	–.18	–.25	–.32	–.38	–.44	–.50	–.61

FIGURE LEGENDS

Figure 1.- Direction of positive angular displacements and stream velocity.

Figure 2.- Three-view drawing of the McDonnell XP-85 airplane.

Figure 3.- Three-quarter front view of the installation of the McDonnell XP-85 airplane in the Ames 40- by 80-foot wind tunnel. (a) Clean condition.

Figure 3.- Concluded. McDonnell XP-85 airplane. (b) Skyhook extended.

Figure 4.- Location of the pressure orifices on the airplane and in the fuselage duct.

CRM SA8J22

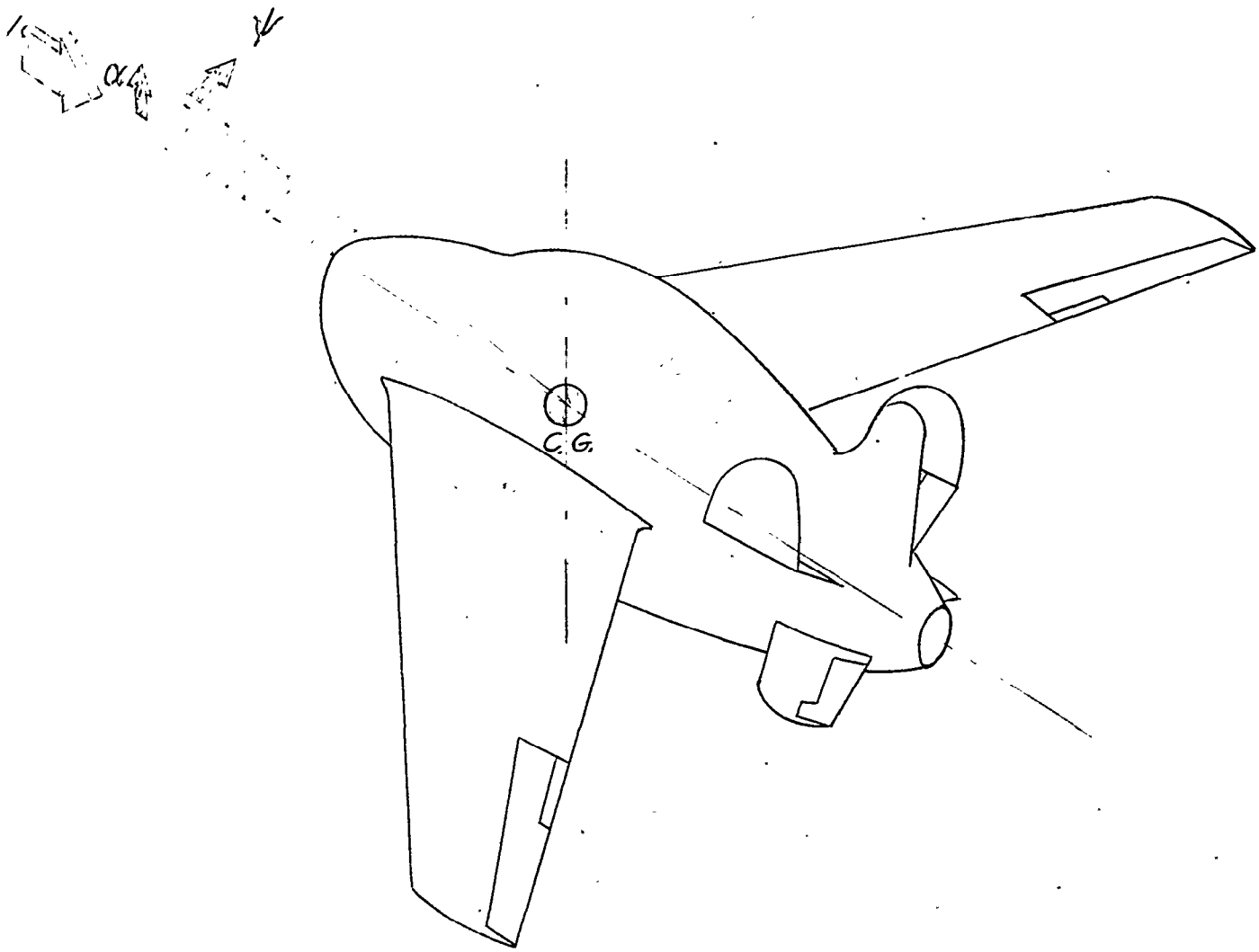

FIGURE 1.- DIRECTION OF POSITIVE ANGULAR DISPLACEMENTS AND STREAM VELOCITY.

[redacted]

NATIONAL ADVISORY COMMITTEE FOR AERONAUTICS

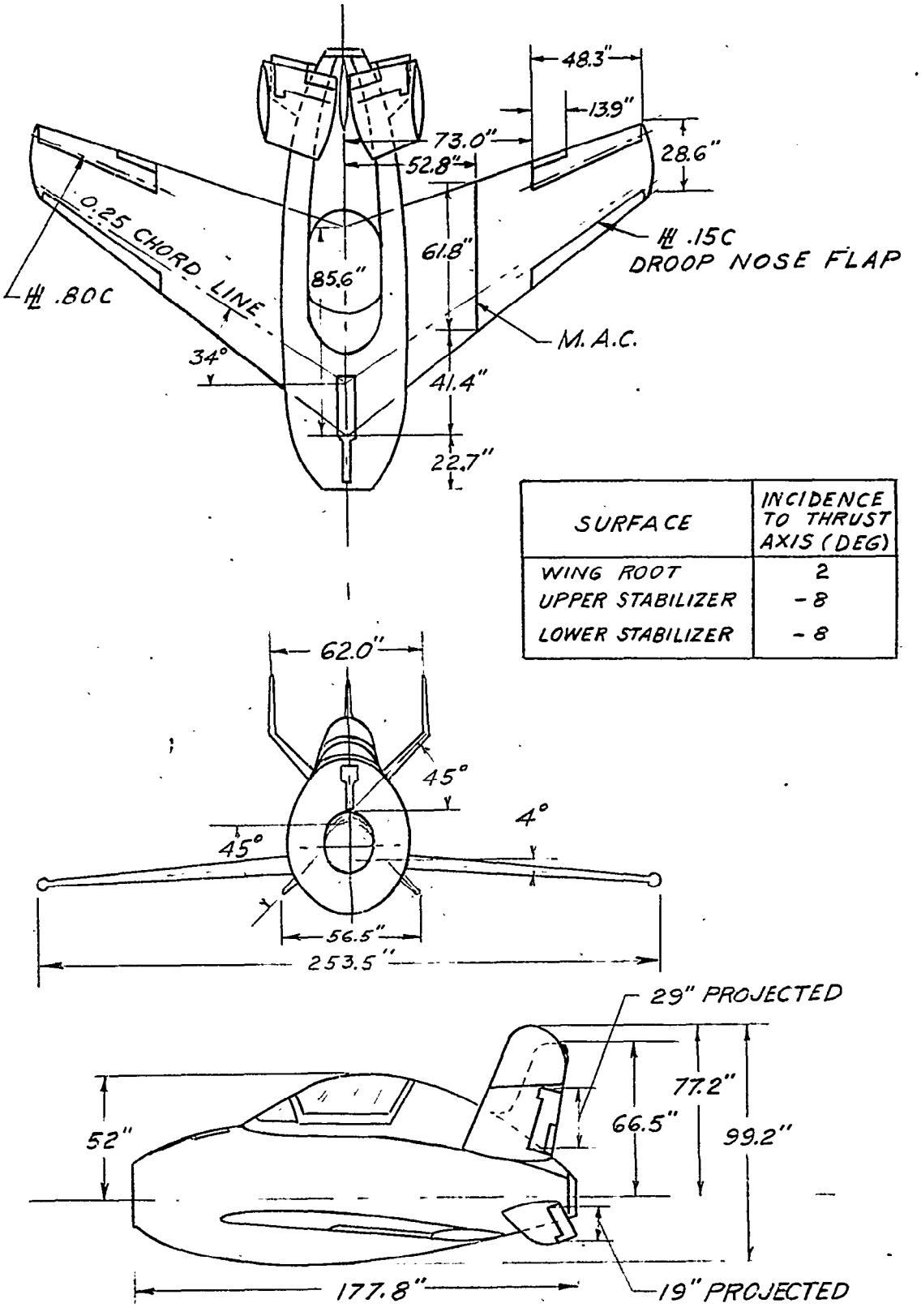

SURFACE	INCIDENCE TO THRUST AXIS (DEG)
WING ROOT	2
UPPER STABILIZER	-8
LOWER STABILIZER	-8

FIGURE 2.- THREE-VIEW DRAWING OF THE MCDONNELL XP-85 AIRPLANE.

[redacted]

NATIONAL ADVISORY COMMITTEE FOR AERONAUTICS

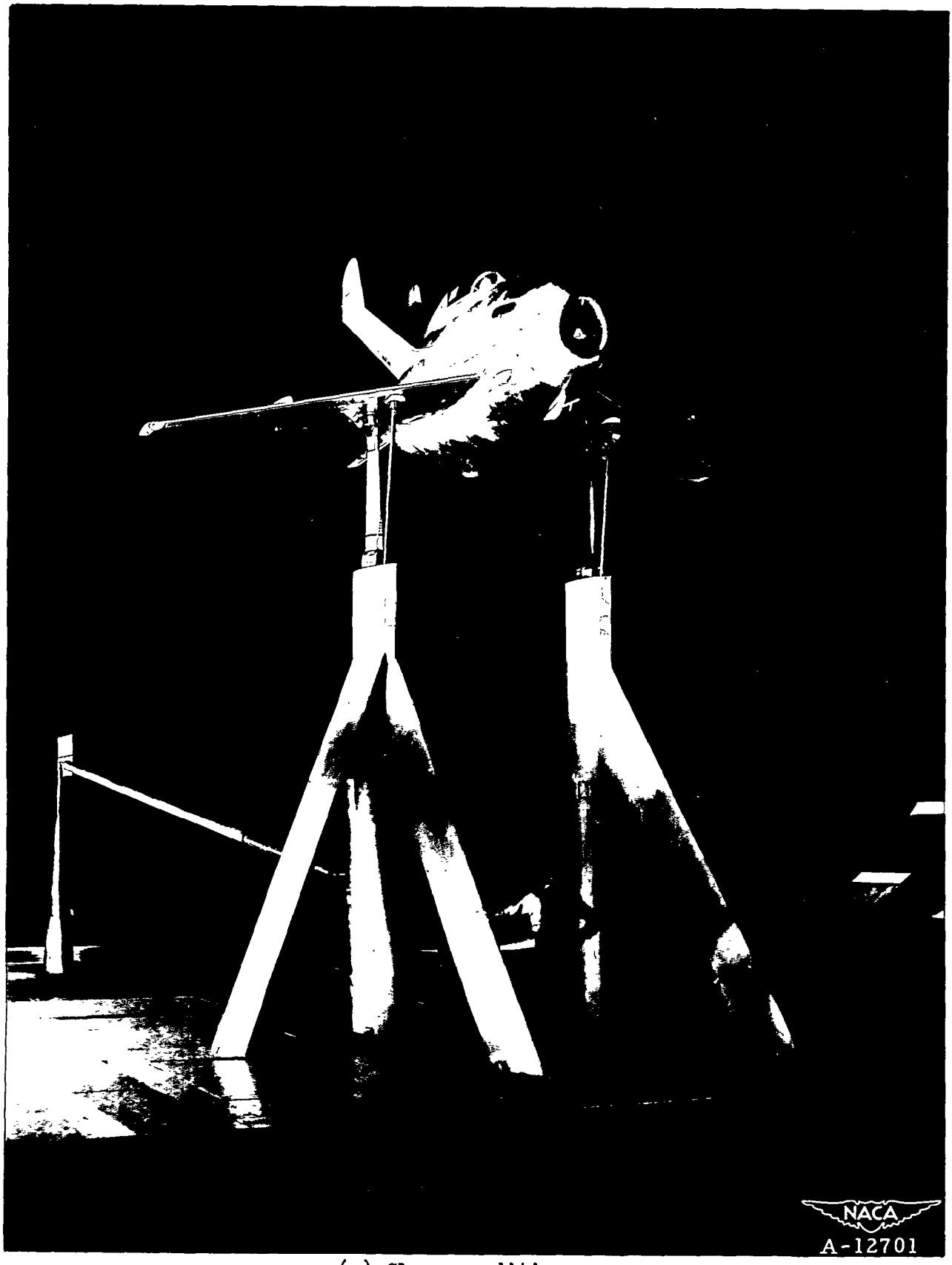

(a) Clean condition.

Figure 3.- Three-quarter front view of the installation of the McDonnell XP-85 airplane in the Ames 40- by 80-foot wind tunnel.

[redacted]

NATIONAL ADVISORY COMMITTEE FOR AERONAUTICS
AMES AERONAUTICAL LABORATORY, MOFFETT FIELD, CALIF.

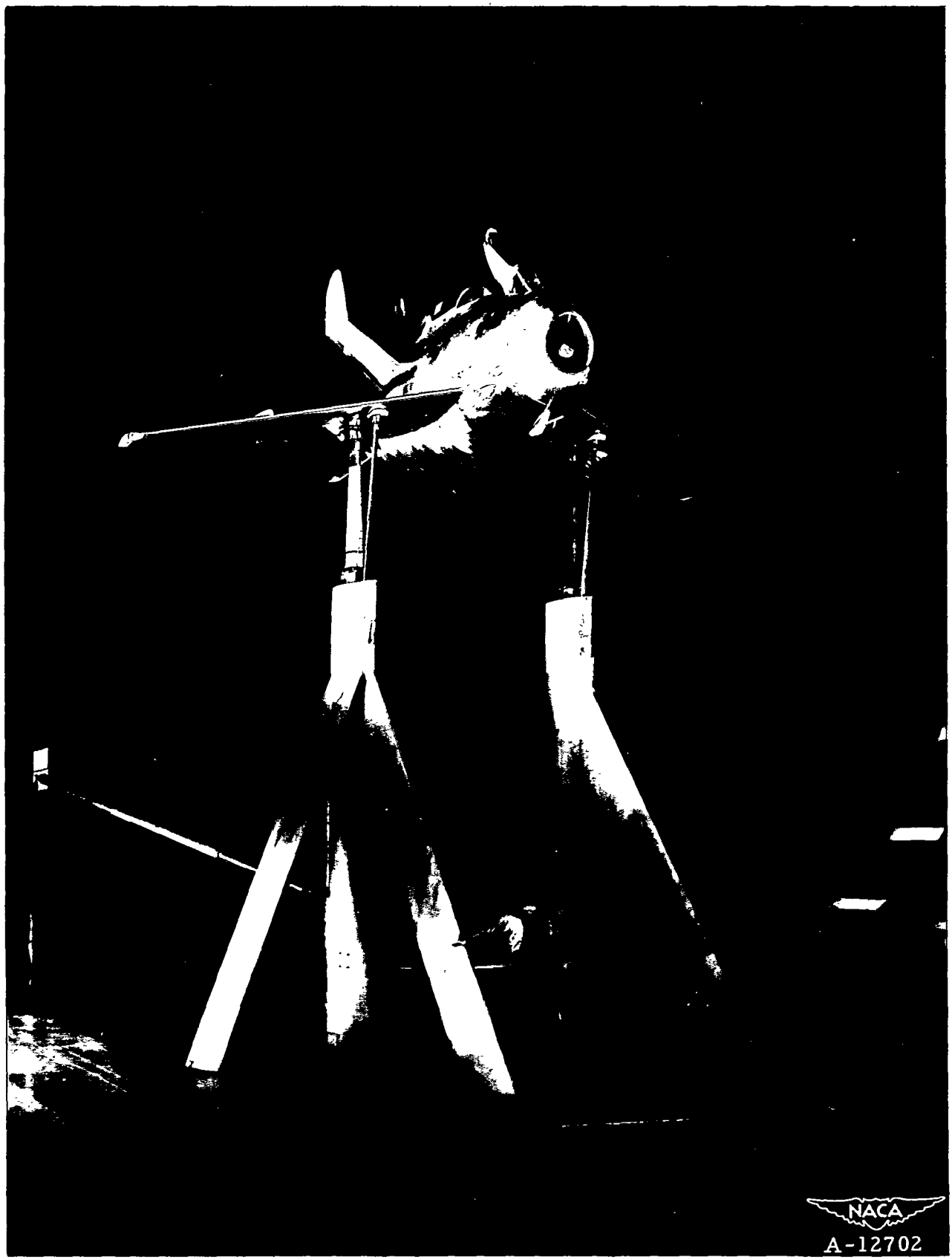

(b) Skyhook extended.

Figure 3.- Concluded.

[redacted]

CRM SA8J22

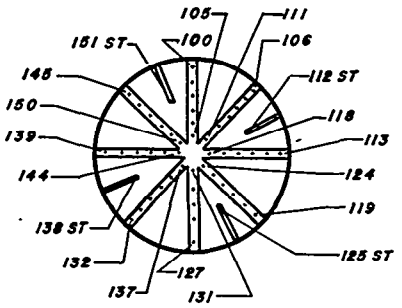

Section "A-A"
Fuselage Duct

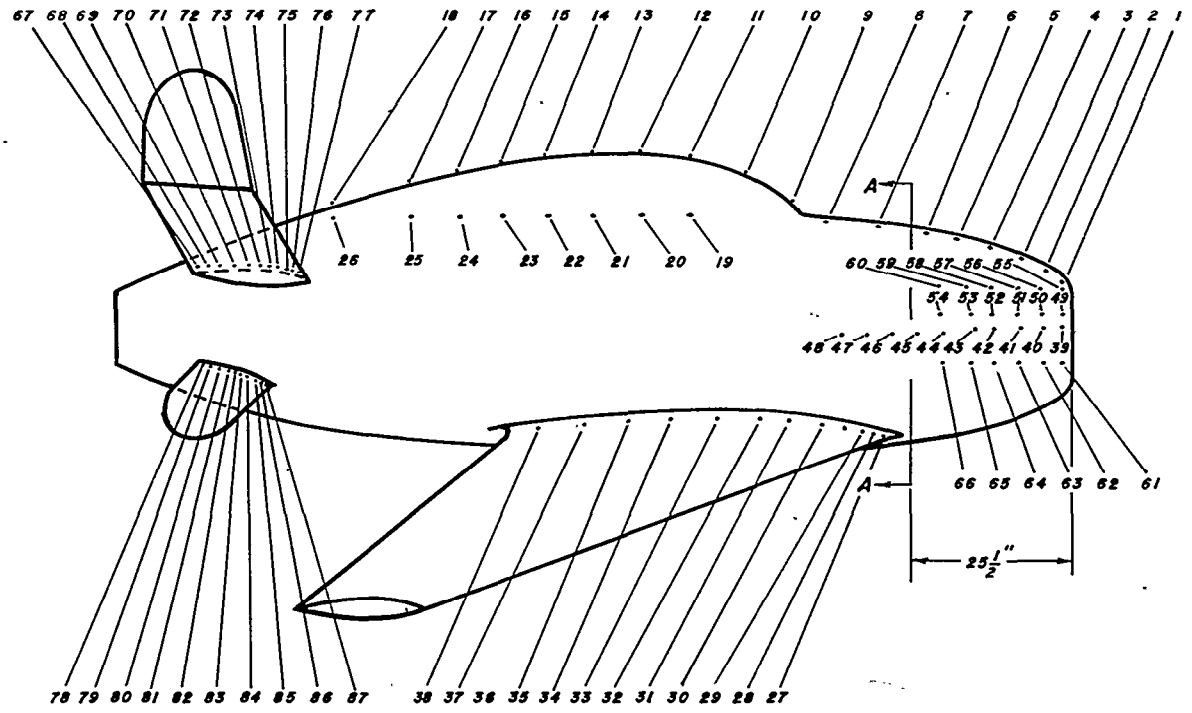

Note: All orifices on the wing and stabilizers are on the upper surfaces only.

Figure 4.—Location of the pressure orifices on the airplane and in the fuselage duct.

[redacted]

NATIONAL ADVISORY COMMITTEE FOR AERONAUTICS

NASA Technical Library
3 1176 01437 2784