SECURITY INFORMATION

~~CONFIDENTIAL~~

Copy 6
RM. L53I24a

NACA RM L53I24a

3 1176 00113 1631

NACA

RESEARCH MEMORANDUM

DATA ON SPOILER-TYPE AILERONS

By John G. Lowry

Langley Aeronautical Laboratory
Langley Field, Va.

CLASSIFICATION CHANGED

To UNCLASSIFIED

By authority of PA #1 Date 9-17-58 WRC

CLASSIFIED DOCUMENT

This material contains information affecting the National Defense of the United States within the meaning of the espionage laws, Title 18, U.S.C., Secs. 793 and 794, the transmission or revelation of which in any manner to an unauthorized person is prohibited by law.

NATIONAL ADVISORY COMMITTEE
FOR AERONAUTICS

WASHINGTON

October 28, 1953

~~CONFIDENTIAL~~

NATIONAL ADVISORY COMMITTEE FOR AERONAUTICS

RESEARCH MEMORANDUM

DATA ON SPOILER-TYPE AILERONS

By John G. Lowry

Interest in spoiler-type ailerons has been intensified recently mainly because they give high reversal speeds for the thin, flexible wings now being used. For the purpose of this paper the term "spoiler" will be applied to many different aileron configurations that obtain their effectiveness by reducing the lift on one wing. For the sake of completeness, a bibliography on spoiler-type controls is included; these papers are arranged according to date of publication.

Examination of spoiler data given in the bibliography indicates that spoilers can be designed to provide adequate effectiveness at subsonic, transonic, and supersonic speeds but at subsonic and transonic speeds plain spoilers do not, in general, provide linear variation of effectiveness with projection, particularly at the lower velocities. In addition, recent data on thin wings (6 percent thick or less) show that a region of ineffectiveness exists at high angles of attack. Using a slot through the wing behind the deflected spoiler (see refs. 1 to 5) alleviates the ineffectiveness associated with both low projections and high angles of attack.

Figure 1 illustrates the effect of the slot. On the left, the rolling-moment coefficient C_l is plotted against spoiler projection δ_s for a plain and a slotted spoiler on an unswept wing (unpublished data). For projections of less than 1 percent the plain spoiler is seen to be ineffective. If a slot is added behind the spoiler and, in this case, a deflector is added to the lower surface, the effectiveness is almost linear with projection and considerably greater than for the plain spoiler. The nonlinearity of control effectiveness of the plain spoiler can be masked to some extent by providing aileron-stick deflections that will rapidly deflect the spoiler near neutral. Although this nonlinear stick-aileron motion may provide satisfactory control for this condition, the control effectiveness will not be satisfactory at high angles of attack as shown by the right-hand portion of figure 1. Here C_l is plotted against angle of attack α for a spoiler on a 30° swept wing of aspect ratio 4 (unpublished data). The plain spoiler is ineffective above an angle of attack of about 13°. The addition of the slot and deflector increases the effectiveness at all angles of attack and provides control up to 24°. This ineffectiveness at high angles of attack results from flow separation at the wing leading edge and is almost independent of spoiler projection. It is, however, alleviated to some extent by decreases in the wing taper ratio and wing sweep, and by increases in the Reynolds number.

The use of leading-edge devices to delay leading-edge separation would be expected to improve the effectiveness of a spoiler aileron. Figure 2 shows the effect of one such device - a drooped leading edge and chord-extension - on the effectiveness of both a plain and slotted spoiler on a 6-percent-thick, 45° sweptback wing of aspect ratio 4 and taper ratio 0.3 (unpublished data). For both the plain spoiler and the spoiler-slot-deflector, where the deflector projection δ_d is three-fourths of the spoiler projection δ_s, the addition of the leading-edge modification improved the spoiler effectiveness, particularly at moderate angles of attack. These data indicate that modifications necessary from a longitudinal-stability point of view should be beneficial if they delay or eliminate the leading-edge separation.

Since the slots are desirable for almost all configurations and necessary in many cases at subsonic speeds, their effectiveness at supersonic speeds is of interest. Figure 3 shows the variation of rolling-moment coefficient with angle of attack for both a plain spoiler and a spoiler-slot-deflector on a swept and an unswept wing at a low supersonic speed, $M = 1.20$ (unpublished data). The addition of the slot and deflector increased the effectiveness of the plain spoiler at all angles of attack for both wings. Some preliminary results at a Mach number of 1.6 indicate the same trends as do these data at $M = 1.20$. Thus, the slots that are so desirable at subsonic speeds are also beneficial at supersonic speeds.

In order to realize the advantages of low twisting moment and resulting high reversal speed, the wing structure with the spoiler must be as stiff as with other types of ailerons. Fortunately, spoilers should be located well to the rear of the wing and, for most spoiler and spoiler-slot configurations, slots through the wing or breaks in the skin can be located behind the torque box and should not seriously reduce the torsional stiffness of the wing.

The next part of the discussion is concerned with the location of spoilers on wings of different plan forms. Figure 4 shows the most satisfactory location for spoiler ailerons on swept wings. The results of many investigations at subsonic, transonic, and supersonic speeds (refs. 5 to 21 and unpublished data) have indicated that for best effectiveness the spoilers should be located in the shaded area. The forward or chordwise limit has been established from two considerations: (1) ineffectiveness at low projections (since this ineffectiveness increases with distance from trailing edge) and (2) unacceptable lag at low speeds. For configurations that do not operate at low speeds (for example, supersonic missiles), the lag may not be a determining factor as it decreases with increases in speed. The chord positions referred to are shown schematically on the right of figure 4. The spoiler location is considered

as the point of highest deflection. The spanwise limits y_i and y_o are a function of the wing sweep.

Figure 5 shows the effect of sweep on these spanwise limitations. On the left is a typical example of the variation of effectiveness with aileron span for ailerons starting at the wing tips. For the unswept wing (unpublished data), the inboard 25 percent of the span does not give any appreciable rolling moment and, for the 50° swept wing (ref. 18), the outboard 15 percent is ineffective. From several similar investigations at both subsonic and supersonic speeds, the approximate variation with sweep for the inboard end y_i and the outboard end y_o has been established as shown on the right in figure 5. This plot shows that, as the sweep of the wing is increased, the spoiler should be moved inboard for best effectiveness.

Figures 6 and 7 show the most satisfactory locations for spoilers on 60° delta wings. The only limitation, based on the available data (refs. 22 and 23 and unpublished data), is the forward location of the spoilers. This limitation is based on ineffectiveness at small angles of attack at subsonic speeds. Figure 7 gives a typical example of the effect of chordwise location. The effectiveness C_l is plotted against projection at $M = 0.85$ for spoilers located at 60 percent root chord in the unsatisfactory region and at 93 percent root chord in the satisfactory region on a delta wing at zero angle of attack. It can be seen that the forward location is ineffective in producing rolling moment up to about 10 percent projection. The rearward location gives effectiveness throughout the deflection range. As the angle of attack is increased the forward spoiler tends to become more effective and has substantially the effectiveness of the rearward spoiler at 12° angle of attack.

A further restriction is necessary if the delta wing is equipped with a double slotted flap (ref. 23). In this case, the spoiler should be located on the flap (fig. 6). The right-hand portion of figure 7 shows the rolling-moment coefficient plotted against spoiler projection for a spoiler located ahead of the flap - the position found to be most satisfactory for relatively thick straight and swept wings - and for a spoiler located on the flap. It is obvious that when the spoiler is located ahead of the flap there is an undesirable variation of effectiveness with projection while the spoiler located on the flap provides sufficient control and has an almost linear variation with projection.

Now that the desirable location for spoilers on wings has been established to some extent, the next problem is to determine how big the spoilers have to be. At subsonic and transonic speeds experimental results must be relied on almost entirely. The results of configurations close to the desired one can then be adjusted to the desired configuration by using standard aileron design methods (refs. 24 to 26). The

effect of any changes in spoiler configuration must be obtained from existing experimental data. In general, flap-type spoilers will have about 10 percent less effectiveness than spoilers projected normal to the wing surface. An analysis of existing data has indicated that to provide adequate control spoilers should have a span of from 50 to 70 percent of the wing semispan and a projection of 7 to 10 percent of the mean chord. At supersonic speeds some helpful information is available concerning spoilers projected normal to the surface. Using a shock-expansion-separation theory the pressures ahead of the spoilers can be estimated and with the aid of empirical relationships the pressures behind the spoiler can be obtained (refs. 20 and 27). Thus for plain spoilers at supersonic speeds the effectiveness may be estimated with some degree of accuracy.

In the design of any control system it is necessary to know the operating forces of the control. The hinge-moment results for spoilers are not nearly so extensive at high speeds as are effectiveness data. The few data available do, however, show the general trends that are to be expected. Figure 8 shows the hinge-moment characteristics of flap-type spoilers on a 60° delta wing. The results (unpublished data) are presented as the variation of hinge-moment coefficient C_h with rolling-moment coefficient C_l, so that a comparison with a flap-type aileron of about the same size can be made. It can be seen that the hinge moments for this type of spoiler are of about the same magnitude as those of the flap at both subsonic and transonic speeds. At the subsonic speed, $M = 0.62$, a nonlinearity is present at low projections for the spoiler-type control - a phenomenon typical of this type of control (ref. 5).

When a spoiler-slot-deflector arrangement is used, the hinge moments of the deflector would be expected to reduce the hinge moments of the spoiler since the deflector should be unstable and tend to open because of its rear hinge location. Figure 9 shows the results of a recent investigation (unpublished) of a spoiler-slot-deflector on a 6-percent-thick 35° swept wing at $M = 0.85$. The hinge-moment coefficient C_h is plotted against spoiler projection δ_s for a plain flap-type spoiler and for a spoiler-slot-deflector when the deflector projection δ_d is one-half the spoiler projection. The deflector appreciably reduces the hinge moments of the spoiler particularly in the spoiler-deflection range from 1 to 4 percent chord. The curves are not faired from 0 to 1 percent projection since no data are available and reversals similar to those shown in figure 8 might be expected. Variation of the ratio δ_s/δ_d will allow one means of adjusting the hinge moments of this type of control and appears to offer promise of a control of good effectiveness and reasonably low hinge moments.

As would be expected, the hinge moments of thin-plate or circular-arc spoilers are small compared to those of flap-type spoilers since the hinge moments can be developed only on the top and bottom edges of the spoiler. Results at low speeds on relatively thick wings (refs. 5 and 28) and on a swept wing at transonic speeds (ref. 29) confirm the low hinge moments but show that they are very nonlinear. This nonlinearity can probably be tolerated since they give forces about one-thirtieth as large as do flap-type ailerons on a typical fighter at transonic speeds.

These low hinge moments are all very well, provided that the necessary 10 percent projection can be incorporated in a 4-percent-thick wing. Figure 10 shows two ways of doing this along with a typical flap-type spoiler. The top sketch is the flap-type spoiler where the projection is limited only by the chord of the flap and the deflection. The center sketch shows a form of circular-arc spoiler (ref. 30). In this case three circular-arc spoilers, one behind the other, are linked so that the rear spoiler deflects 3 times as fast as the front spoiler and at full deflection provides a solid spoiler of the desired height. The bottom sketch is the so-called semaphore spoiler and consists of several flat plates hinged in the chord plane and deflected similar to semaphore train signals. At full deflection, they can form an almost solid spoiler of considerable deflection as shown in the figure. The number and length of the individual arms will depend on the deflection desired and the wing thickness. These last two types can be made to have relatively low hinge moments while still providing the desired projection.

Another means of providing spoiler control with low operating forces is that of using a jet of air to replace the spoiler (refs. 31 to 33). Figure 11 shows some preliminary results of a jet control utilizing stagnation pressure on a 35° swept wing. For these tests a very short span spoiler was used but the variation of effectiveness with span should be the same as for a conventional spoiler. With stagnation-pressure air, the jet is as effective as a 3-percent-chord spoiler and does not show the loss in effectiveness at large angles of attack. This, of course, is not sufficient for a fighter-type airplane but could be used as emergency control if normal control were obtained by using air at high pressure where roll is obtained both from jet thrust and from changing circulation around the wing. In order to vary the rolling effectiveness C_l, the slot width can be varied. The right-hand portion of figure 11 shows the variation of C_l with gap width δ_g; an almost linear variation is indicated for the jet alone. One means of increasing the effectiveness is to deflect a spoiler ahead of the jet. The curve for this configuration shows that considerably more effectiveness is obtained. In this case, the total spoiler projection, 3 percent chord, could be fitted as a simple circular-arc spoiler within the wing.

In addition to the effectiveness and hinge moments of a control system, its effect on the rest of the airplane is of importance. Any obstruction such as a spoiler that causes separation of flow behind it will create turbulent flow over parts of the airplane. This turbulent flow may result in buffeting or shaking of the airplane. The few data that are available (unpublished) on flow fluctuations behind a spoiler are too sketchy to provide any reliable indication of either the magnitude or frequency of the air flow. A survey of the airplanes using spoilers at high subsonic speeds indicates, however, that about one-half of them have had no trouble from buffeting. Although not much can be done as far as predicting buffeting, it is known that perforating the face of the spoiler or otherwise breaking up the solid blocking will reduce any tendency of buffeting but that this will also cause some reduction in effectiveness, the magnitude of the reduction depending on the amount of area removed.

Another point of concern in the use of spoiler-type ailerons is the drag penalty associated with their use. Figure 12 shows the drag coefficient due to control deflection ΔC_D for both flap-type ailerons and spoiler ailerons that produce the same rolling-moment coefficient. The left-hand portion is for a swept wing at subsonic speeds (unpublished data) and the right-hand portion is for an unswept wing at supersonic velocities (refs. 15 and 34). It can be seen that there is a large drag associated with spoilers at low angles of attack but that the drag increment decreases rapidly with increased angle of attack and at angles of attack of about 8° the spoiler and aileron produce the same drag. In order to give some idea of the seriousness of these relatively high drags associated with spoilers at low angles of attack, calculations were made for a modern fighter making a 90° bank in 1 second at 30,000 feet and at a Mach number of 0.85. These calculations show that the speed of the airplane will be decreased only 2 miles per hour. If the maneuver is assumed to be an entry into a turn, even less loss in speed would be obtained since the angle of attack increases during the maneuver.

In conclusion, in general, there should be a slot through the wing behind the deflected spoiler. The spoiler should be located to the rear of the wing in the center portion of the wing semispan. Satisfactory spoiler configurations can be designed that will have reasonably low operating forces.

Langley Aeronautical Laboratory,
National Advisory Committee for Aeronautics,
Langley Field, Va., September 4, 1953

REFERENCES

1. Vogler, Raymond D.: Wind-Tunnel Investigation at High Subsonic Speeds of a Spoiler-Slot-Deflector Combination on an NACA 65A006 Wing With Quarter-Chord Line Swept Back 32.6°. NACA RM L53D17, 1953.

2. Hammond, Alexander D., and Watson, James M.: Lateral-Control Investigation at Transonic Speeds of Retractable Plug-Type Spoiler-Slot Ailerons on a Tapered 60° Sweptback Wing of Aspect Ratio 2. Transonic-Bump Method. NACA RM L52F16, 1952.

3. Watson, James M.: Low-Speed Lateral-Control Investigation of a Flap-Type Spoiler Aileron With and Without a Deflector and Slot on a 6-Percent-Thick, Tapered, 45° Sweptback Wing of Aspect Ratio 4. NACA RM L52G10, 1952.

4. Hammond, Alexander D., and McMullan, Barbara M.: Chordwise Pressure Distribution at High Subsonic Speeds Near Midsemispan of a Tapered 35° Sweptback Wing of Aspect Ratio 4 Having NACA 65A006 Airfoil Sections and Equipped With Various Spoiler Ailerons. NACA RM L52C28, 1952.

5. Fischel, Jack, and Ivey, Margaret F.: Collection of Test Data for Lateral Control With Full-Span Flaps. NACA TN 1404, 1948.

6. Hammond, Alexander D.: Lateral-Control Investigation of Flap-Type and Spoiler-Type Controls on a Wing With Quarter-Chord-Line Sweepback of 60°, Aspect Ratio 2, Taper Ratio 0.6, and NACA 65A006 Airfoil Section. Transonic-Bump Method. NACA RM L50E09, 1950.

7. Schneiter, Leslie E., and Watson, James M.: Low-Speed Wind-Tunnel Investigation of Various Plain-Spoiler Configurations for Lateral Control on a 42° Sweptback Wing. NACA TN 1646, 1948.

8. Fischel, Jack, and Tamburello, Vito: Investigation of Effect of Span, Spanwise Location, and Chordwise Location of Spoilers on Lateral Control Characteristics of a Tapered Wing. NACA TN 1294, 1947.

9. Fischel, Jack, and Hammond, Alexander D.: Investigation of Effect of Span and Spanwise Location of Plain and Stepped Spoiler Ailerons on Lateral Control Characteristics of a Wing With Leading Edge Swept Back 51.3°. NACA RM L9K02, 1950.

10. Graham, Robert R., and Koven, William: Lateral-Control Investigation of a 37° Sweptback Wing of Aspect Ratio 6 at a Reynolds Number of 6,800,000. NACA RM L8K12, 1949.

11. Spooner, Stanley H., and Woods, Robert L.: Low-Speed Investigation of Aileron and Spoiler Characteristics of a Wing Having 42° Sweepback of the Leading Edge and Circular-Arc Airfoil Sections at Reynolds Numbers of Approximately 6.0×10^6. NACA RM L9A07, 1949.

12. Bollech, Thomas V., and Pratt, George L.: Effect of Plain and Step Spoiler Location and Projection on the Lateral Control Characteristics of a Plain and Flapped 42° Sweptback Wing at a Reynolds Number of 6.8×10^6. NACA RM L9I20a, 1950.

13. Pasamanick, Jerome, and Sellers, Thomas B.: Low-Speed Investigation of the Effect of Several Flap and Spoiler Ailerons on the Lateral Characteristics of a 47.5° Sweptback-Wing—Fuselage Combination at a Reynolds Number of 4.4×10^6. NACA RM L50J20, 1950.

14. Graham, Robert R.: Lateral-Control Investigation at a Reynolds Number of 5,300,000 of a Wing of Aspect Ratio 5.8 Sweptforward 32° at the Leading Edge. NACA RM L9H18, 1950.

15. Conner, D. William, and Mitchell, Meade H., Jr.: Effects of Spoiler on Airfoil Pressure Distribution and Effects of Size and Location of Spoilers on the Aerodynamic Characteristics of a Tapered Unswept Wing of Aspect Ratio 2.5 at a Mach Number of 1.90. NACA RM L50I20, 1951.

16. Strass, H. Kurt: Summary of Some Effective Aerodynamic Twisting-Moment Coefficients of Various Wing-Control Configurations at Mach Numbers From 0.6 to 1.7 As Determined From Rocket-Powered Models. NACA RM L51K20, 1952.

17. Schult, Eugene D., and Fields, E. M.: Free-Flight Measurements of Some Effects of Spoiler Span and Projection and Wing Flexibility on Rolling Effectiveness and Drag of Plain Spoilers on a Tapered Sweptback Wing at Mach Numbers Between 0.6 and 1.6. NACA RM L52H06a, 1952.

18. Kindell, William H.: Effects of Span and Spanwise and Chordwise Location on the Control Effectiveness of Spoilers on a 50° Sweptback Wing at Mach Numbers of 1.41 and 1.96. NACA RM L53B09, 1953.

19. Jacobsen, Carl R.: Control Characteristics of Trailing-Edge Spoilers on Untapered Blunt Trailing-Edge Wings of Aspect Ratio 2.7 With 0° and 45° Sweepback at Mach Numbers of 1.41 and 1.96. NACA RM L52J28, 1952.

20. Mueller, James N.: Investigation of Spoilers at a Mach Number of 1.93 To Determine the Effects of Height and Chordwise Location on the Section Aerodynamic Characteristics of a Two-Dimensional Wing. NACA RM L52L31, 1953.

21. Wagner, Herbert A.: Bars as Trailing-Edge Control Surfaces. Tech. Memo. Rep. No. 52, U. S. Naval Air Missile Test Center (Pt. Mugu, Calif.), Oct. 15, 1951.

22. Wiley, Harleth G., and Solomon, Martin: A Wind-Tunnel Investigation at Low Speeds of the Aerodynamic Characteristics of Various Spoiler Configurations on a Thin 60° Delta Wing. NACA RM L52J13, 1952.

23. Croom, Delwin R.: Characteristics of Flap-Type Spoiler Ailerons at Various Locations on a 60° Delta Wing With a Double Slotted Flap. NACA RM L52J24, 1952.

24. DeYoung, John: Theoretical Antisymmetric Span Loading for Wings of Arbitrary Plan Form at Subsonic Speeds. NACA Rep. 1056, 1951. (Supersedes NACA TN 2140.)

25. DeYoung, John: Spanwise Loading for Wings and Control Surfaces of Low Aspect Ratio. NACA TN 2011, 1950.

26. Lowry, John G., and Schneiter, Leslie E.: Estimation of Effectiveness of Flap-Type Controls on Sweptback Wings. NACA TN 1674, 1948.

27. Czarnecki, K. R., and Lord, Douglas R.: Load Distributions Associated With Controls at Supersonic Speeds. NACA RM L53D15a, 1953.

28. Ashkenas, I. L.: The Development of a Lateral-Control System for Use With Large-Span Flaps. NACA TN 1015, 1946.

29. Fikes, Joseph E.: Hinge-Moment and Other Aerodynamic Characteristics at Transonic Speeds of a Quarter-Span Spoiler on a Tapered 45° Sweptback Wing of Aspect Ratio 3. NACA RM L52A03, 1952.

30. Rogallo, Francis M., Lowry, John G., and Fischel, Jack: Lateral-Control Devices Suitable for Use With Full-Span Flaps. Jour. Aero. Sci., vol. 17, no. 10, Oct. 1950.

31. Göthert, B.: Effectiveness of a Spoiler at High Subsonic Speeds. Reps. and Translations No. 364, British M.O.S.(A) Völkenrode, Feb. 1947.

32. Stein H.: "Moeve Project" Die Erzeugung von Querkraften an Luftdurchflossenen Flubein. (Guided Projectiles - Trials on Wing Using Jet Methods for Increasing Lift.) British Ministry of Supply, TPA 3/TIB Translation No. UNT 329 T, 1947.

33. Wieghardt, K.: Zum Ersatz von Spreizklappen durch Ausblasen von Luft. FB Nr. 1849, Deutsche Luftfahrtforschung (Braunschweig), 1943.

34. Mitchell, Meade H., Jr.: Effects of Varying the Size and Location of Trailing-Edge Flap-Type Controls on the Aerodynamic Characteristics of an Unswept Wing at a Mach Number of 1.9. NACA RM L50F08, 1950.

BIBLIOGRAPHY

Weick, Fred E., and Shortal, Joseph A.: Wind-Tunnel Research Comparing Lateral Control Devices, Particularly at High Angles of Attack. V - Spoilers and Ailerons on Rectangular Wings. NACA Rep. 439, 1932.

Weick, Fred E., and Wenzinger, Carl J.: Preliminary Investigation of Rolling Moments Obtained With Spoilers on Both Slotted and Plain Wings. NACA TN 415, 1932.

Hübner, Walter, and Pleines, Wilhelm: The D.V.L. Gliding-Angle Control (W. Hübner Design). NACA TM 697, 1932.

Shortal, J. A.: Effect of Retractable-Spoiler Location on Rolling- and Yawing-Moment Coefficients. NACA TN 499, 1934.

Soulé, H. A., and McAvoy, W. H.: Flight Investigation of Lateral Control Devices for Use With Full-Span Flaps. NACA Rep. 517, 1935.

Weick, Fred E., and Jones, Robert T.: Résumé and Analysis of N.A.C.A. Lateral Control Research. NACA Rep. 605, 1937.

Rogallo, F. M.: Aerodynamic Characteristics of a Slot-Lip Aileron and Slotted Flap for Dive Brakes. NACA WR L-337, 1941. (Formerly NACA ACR, Apr. 1941.)

Rogallo, Francis M., and Spano, Bartholomew S.: Wind-Tunnel Investigation of a Plain and Slot-Lip Aileron on a Wing With a Full-Span Slotted Flap. NACA WR L-375, 1941. (Formerly NACA ACR, Apr. 1941.)

Rogallo, F. M., and Schuldenfrei, Marvin.: Wind-Tunnel Investigation of a Plain and a Slot-Lip Aileron on a Wing With a Full-Span Flap Consisting of an Inboard Fowler and an Outboard Slotted Flap. NACA WR L-421, 1941. (Formerly NACA ARR, June 1941.)

Lowry, John G.: Power-Off Wind-Tunnel Tests of the 1/8-Scale Model of the Brewster F2A Airplane. NACA WR L-543, 1941. (Formerly NACA MR, June 21, 1941.)

Lowry, John G.: Power-On Wind-Tunnel Tests of the 1/8-Scale Model of the Brewster F2A Airplane With Full-Span Slotted Flaps. NACA WR L-707, 1941. (Formerly NACA MR, Aug. 21, 1941.)

Baker, Paul S.: The Development of a New Lateral-Control Arrangement. NACA ARR, Oct. 1941.

Lowry, John G.: Additional Power-On Wind-Tunnel Tests of the 1/8-Scale Model of the Brewster F2A Airplane With Full-Span Slotted Flaps. NACA WR L-708, 1941. (Formerly NACA MR, Oct. 27, 1941.)

Anon.: Wind-Tunnel Investigation of Spoiler-Lateral-Control Devices - XP-61, Night Interceptor Pursuit. Rep. No. A-WT 7, Northrop Aircraft, Inc., Nov. 13, 1941.

Rogallo, Francis M., and Swanson, Robert S.: Wind-Tunnel Development of a Plug-Type Spoiler-Slot Aileron for a Wing With a Full-Span Slotted Flap and a Discussion of Its Application. NACA WR L-420, 1941. (Formerly NACA ARR, Nov. 1941.)

Rogallo, F. M., and Spano, Bartholomew S.: Wind-Tunnel Investigation of a Spoiler-Slot Aileron on an NACA 23012 Airfoil With a Full-Span Fowler Flap. NACA WR L-376, 1941. (Formerly NACA ARR, Dec. 1941.)

Wenzinger, Carl J., and Rogallo, Francis M.: Wind-Tunnel Investigation of Spoiler, Deflector, and Slot Lateral-Control Devices on Wings With Full-Span Split and Slotted Flaps. NACA Rep. 706, 1941.

Wenzinger, Carl J., and Bowen, John D.: Tests of Round and Flat Spoilers on a Tapered Wing in the NACA 19-Foot Pressure Wind Tunnel. NACA TN 801, 1941.

Lowry, John G., and Toll, Thomas A.: Power-On Longitudinal-Stability and Control Tests of the 1/8-Scale Model of the Brewster F2A Airplane Equipped With Full-Span Slotted Flaps and a New Horizontal Tail. NACA WR L-709, 1942. (Formerly NACA MR, Mar. 14, 1942.)

Lowry, John G. and Liddell, Robert B.: Wind-Tunnel Investigation of a Tapered Wing With a Plug-Type Spoiler-Slot Aileron and Full-Span Slotted Flaps. NACA WR L-250, 1942. (Formerly NACA ARR, July 1942.)

Wild, J. M.: Hinge-Moment Characteristics of a Plug-Type Spoiler-Slot Aileron - P-61 Night Interceptor Pursuit. Rep. No. A-WT-19, Northrop Aircraft, Inc., Aug. 1, 1942.

Clousing, Lawrence A., and McAvoy, William H.: Flight Measurements of the Lateral-Control Characteristics of an Airplane Equipped With a Combination Aileron-Spoiler Control System. NACA WR A-68, 1942. (Formerly NACA MR, Bur. Aero., Sept. 2, 1942.)

Turner William N., and Adams, Betty: Flight Measurements of the Effects of a Wing Leading-Edge Slot and Other Modifications on the Stability, Maximum Lift, and High Speed on an Observation Airplane. NACA WR A-88, 1943. (Formerly NACA MR, Bur. Aero., Jan. 19, 1943.)

Spahr, J. Richard, and Christophersen, Don R.: Measurements in Flight of the Stability, Lateral-Control, and Stalling Characteristics of an Airplane Equipped With Full-Span Zap Flaps and Spoiler-Type Ailerons. NACA WR A-28, 1943. (Formerly NACA MR, Dec. 5, 1943.)

Wetmore, Joseph W., and Sawyer, Richard H.: Flight Tests of F2A-2 Airplane With Full-Span Slotted Flaps and Trailing-Edge and Slot-Lip Ailerons. NACA WR L-272, 1943. (Formerly NACA ARR 3L07.)

Wieghardt, K.: Zum Ersatz von Spreizklappen durch Ausblasen von Luft. FB Nr. 1849, Deutsche Luftfahrtforschung (Braunschweig), 1943.

Laitone, Edmund V.: An Investigation of the High-Speed Lateral-Control Characteristics of a Spoiler. NACA ACR 4C23, 1944.

Laitone, Edmund V.: An Investigation of 0.15-Chord Ailerons on a Low-Drag Tapered Wing at High Speeds. NACA WR A-24, 1944. (Formerly NACA ACR 4I25.)

Conner, D. W., Fairbanks, R. W., and Neely, R. H.: Tests of Spoilers as a Lateral-Control Device on a 1/8-Scale Model of the B-32 Airplane in the 19-Foot Pressure Tunnel. NACA MR L5A08, Army Air Forces, 1945.

Nuber, Robert J., and Rice, Fred J., Jr.: Lift Tests of a 0.1536c Thick Douglas Airfoil Section of NACA 7-Series Type Equipped With a Lateral-Control Device for Use With a Full-Span Double-Slotted Flap on the C-74 Airplane. NACA WR L-641, 1945. (Formerly NACA MR L5C24a.)

Purser, Paul E., and McKinney, Elizabeth G.: Comparison of Pitching Moments Produced by Plain Flaps and by Spoilers and Some Aerodynamic Characteristics of an NACA 23012 Airfoil With Various Types of Aileron. NACA WR L-124, 1945. (Formerly NACA ACR L5C24a.)

Underwood, William J. and Fullmer, Felicien F., Jr.: Two-Dimensional Wind-Tunnel Investigation of Spoiler Aileron Flap Model for the Hughes XF-11 Airplane. NACA WR L-644, 1945. (Formerly NACA MR L5C29.)

Laitone, Edmund V., and Summers, James L.: An Additional Investigation of the High-Speed Lateral-Control Characteristics of Spoilers. NACA WR A-21, 1945. (Formerly NACA ACR 5D28.)

Weyl, A. R.: Tailless Aeroplane Control Systems. Aircraft Engineering, vol. XVII, no. 195, May, 1945, pp. 133-145.

Holtzclaw, Ralph W.: Wind-Tunnel Investigation of the Effects of Spoilers on the Characteristics of a Low-Drag Airfoil Equipped With a 0.25-Chord Slotted Flap. NACA WR A-92, 1945. (Formerly NACA MR A5G23.)

UNCLASSIFIED

Ashkenas, I. L.: The Development of a Lateral-Control System for Use With Large-Span Flaps. NACA TN 1015, 1946.

Letko, William, and Goodman, Alex: Preliminary Wind-Tunnel Investigation at Low Speed of Stability and Control Characteristics of Swept-Back Wings. NACA TN 1046, 1946.

Lowry, John G., and Turner, Thomas R.: Pressure Distribution Over a Plug-Type Spoiler-Slot Aileron on a Tapered Wing With Full-Span Slotted Flaps. NACA TN 1079, 1946.

Soulé, Hartley A.: Influence of Large Amounts of Wing Sweep on Stability and Control Problems of Aircraft. NACA TN 1088, 1946.

Spahr, J. Richard: Lateral-Control Characteristics of Various Spoiler Arrangements as Measured in Flight. NACA TN 1123, 1947.

Fischel, Jack, and Tamburello, Vito: Investigation of Effect of Span, Spanwise Location, and Chordwise Location of Spoilers on Lateral Control Characteristics of a Tapered Wing. NACA TN 1294, 1947.

Fitzpatrick, James E., and Furlong, G. Chester: Effect of Spoiler-Type Lateral-Control Devices on the Twisting Moments of a Wing of NACA 230-Series Airfoil Sections. NACA TN 1298, 1947.

Holtzclaw, Ralph W., and Dods, Jules B., Jr.: Wind-Tunnel Investigation of Drooped Ailerons on a 16-Percent-Thick Low-Drag Airfoil. NACA TN 1386, 1947.

Deters, Owen J., and Russell, Robert T.: Investigation of a Spoiler-Type Lateral Control System on a Wing With Full-Span Flaps in the Langley 19-Foot Pressure Tunnel. NACA TN 1409, 1947.

Deters, Owen J.: Comparison of the Control-Force Characteristics of Two Types of Lateral-Control System for Large Airplanes. NACA TN 1441, 1947.

Göthert, B.: Effectiveness of a Spoiler at High Subsonic Speeds. Reps. and Translations No. 364, British M.O.S.(A) Völkenrode, Feb. 1947.

Silsby, Norman S., and Daum, Fred L.: The Effectiveness of a Trailing-Edge Spoiler on a Swept-Back Airfoil at Transonic Speeds From Tests by the NACA Wing-Flow Method. NACA RM L6K12a, 1947.

Neely, Robert H., and Conner, D. William: Aerodynamic Characteristics of a 42° Swept-Back Wing With Aspect Ratio 4 and NACA 64_1-112 Airfoil Sections at Reynolds Numbers From 1,700,000 to 9,500,000. NACA RM L7D14, 1947.

UNCLASSIFIED

Schneiter, Leslie E., and Ziff, Howard L.: Preliminary Investigation of Spoiler Lateral Control on a 42° Sweptback Wing at Transonic Speeds. NACA RM L7F19, 1947.

Langley Research Staff (Compiled by Thomas A. Toll): Summary of Lateral-Control Research. NACA Rep. 868, 1947. (Formerly NACA TN 1245.)

Stein H.: "Moeve Project" Die Erzeugung von Querkraften an Luftdurchflossenen Flubein. (Guided Projectiles - Trials on Wing Using Jet Methods for Increasing Lift.) British Ministry of Supply, TPA 3/TIB Translation No. UNT 329 T, 1947.

Fischel, Jack, and Ivey, Margaret F.: Collection of Test Data for Lateral Control With Full-Span Flaps. NACA TN 1404, 1948.

Schneiter, Leslie E., and Watson, James M.: Low-Speed Wind-Tunnel Investigation of Various Plain-Spoiler Configurations for Lateral Control on a 42° Sweptback Wing. NACA TN 1646, 1948.

Fischel, Jack, and Schneiter, Leslie E.: High-Speed Wind-Tunnel Investigation of an NACA 65-210 Semispan Wing Equipped With Plug and Retractable Ailerons and a Full-Span Slotted Flap. NACA TN 1663, 1948.

Hopkins, Edward J.: A Wind-Tunnel Investigation at Low Speed of Various Lateral Controls on a 45° Sweptback Wing. NACA RM A7L16, 1948.

Sandahl, Carl A.: Free-Flight Investigation of the Rolling Effectiveness of a Wing-Spoiler Arrangement at High Subsonic, Transonic, and Supersonic Speeds. NACA RM L8A07, 1948.

Turner, Thomas R., Lockwood, Vernard E., and Vogler, Raymond D.: Preliminary Investigation of Various Ailerons on a 42° Sweptback Wing for Lateral Control at Transonic Speeds. NACA RM L8D21, 1948.

Fischel, Jack.: Wind-Tunnel Investigation of an NACA 65-210 Semispan Wing Equipped With Circular Plug Ailerons and a Full-Span Slotted Flap. NACA TN 1802, 1949.

Fischel, Jack, and Vogler, Raymond D.: High-Lift and Lateral Control Characteristics of an NACA 65_2-215 Semispan Wing Equipped With Plug and Retractable Ailerons and a Full-Span Slotted Flap. NACA TN 1872, 1949.

Ernst, G., and Kramer, M.: Development of Spoiler Controls for Remote Control of Flying Missiles. NACA TM 1210, 1949.

Graham, Robert R. and Koven, William: Lateral-Control Investigation of a 37° Sweptback Wing of Aspect Ratio 6 at a Reynolds Number of 6,800,000. NACA RM L8K12, 1949.

Schneiter, Leslie E., and Watson, James M.: Wind-Tunnel Investigation at Low Speeds of Various Plug-Aileron and Lift-Flap Configurations on a 42° Sweptback Semispan Wing. NACA RM L8K19, 1949.

Spooner, Stanley H., and Woods, Robert L.: Low-Speed Investigation of Aileron and Spoiler Characteristics of a Wing Having 42° Sweepback of the Leading Edge and Circular-Arc Airfoil Sections at Reynolds Numbers of Approximately 6.0×10^6. NACA RM L9A07, 1949.

Braslow, Albert L., and Visconti, Fioravante: Two-Dimensional Wind-Tunnel Investigation of Two NACA 7-Series Type Airfoils Equipped With a Slot-Lip Aileron, Trailing-Edge Frise Aileron, and a Double Slotted Flap. NACA RM L9B23, 1949.

Schneiter, Leslie, E., and Hagerman, John R.: Wind-Tunnel Investigation at High Subsonic Speeds of the Lateral-Control Characteritics of an Aileron and a Stepped Spoiler on a Wing With Leading Edge Swept Back 51.3°. NACA RM L9D06, 1949.

Newman, B. G.: The Re-Attachment of a Turbulent Boundary-Layer Behind a Spoiler. Rep. A. 64, Aero. Res. Lab. (Melbourne), Oct. 1949.

McLarren, Robert: Air Brakes: Standard Fighter Accessory. Aviation Week, vol. 51, no. 20, Nov. 14, 1949, pp. 21-28.

Lovell, Powell M., Jr., and Stassi, Paul P.: A Comparison of the Lateral Controllability With Flap and Plug Ailerons on a Sweptback-Wing Model. NACA TN 2089, 1950.

Riebe, John M., and Watson, James M.: The Effect of End Plates on Swept Wings at Low Speed. NACA TN 2229, 1950.

Lovell, Powell M., Jr.: A Comparison of the Lateral Controllability With Flap and Plug Ailerons on a Sweptback-Wing Model Having Full-Span Flaps. NACA TN 2247, 1950.

Graham, Robert R.: Lateral-Control Investigation at a Reynolds Number of 5,300,000 of a Wing of Aspect Ratio 5.8 Sweptforward 32° at the Leading Edge. NACA RM L9H18, 1950.

Fischel, Jack, and Hammond, Alexander D.: Investigation of Effect of Span and Spanwise Location of Plain and Stepped Spoiler Ailerons on Lateral Control Characteristics of a Wing With Leading Edge Swept Back 51.3°. NACA RM L9K02, 1950.

Bollech, Thomas V., and Pratt, George L.: Effect of Plain and Step Spoiler Location and Projection on the Lateral Control Characteristics of a Plain and Flapped 42° Sweptback Wing at a Reynolds Number of 6.8×10^6. NACA RM L9L20a, 1950.

Olson, Robert N., and Mead, Merrill H.: Aerodynamic Study of a Wing-Fuselage Combination Employing a Wing Swept Back 63°. - Effectiveness of an Elevon as a Longitudinal Control and the Effects of Camber and Twist on the Maximum Lift-Drag Ratio at Supersonic Speeds. NACA RM A50A31a, 1950.

Hammond, Alexander D.: Lateral-Control Investigation of Flap-Type and Spoiler-Type Controls on a Wing With Quarter-Chord-Line Sweepback of 60°, Aspect Ratio 2, Taper Ratio 0.6, and NACA 65A006 Airfoil Section. Transonic-Bump Method. NACA RM L50E09, 1950.

Mitchell, Meade H., Jr.: Effects of Varying the Size and Location of Trailing-Edge Flap-Type Controls on the Aerodynamic Characteristics of an Unswept Wing at a Mach Number of 1.9. NACA RM L50F08, 1950.

Weiburg, James A., and Carel, Hubert C.: Wind-Tunnel Investigation at Low Speed of a Wing Swept Back 63° and Twisted and Cambered for Uniform Load at a Lift Coefficient of 0.5 and With a Thickened Tip Section. NACA RM A50I14, 1950.

Pasamanick, Jerome, and Sellers, Thomas B.: Low-Speed Investigation of the Effect of Several Flap and Spoiler Ailerons on the Lateral Characteristics of a 47.5° Sweptback-Wing—Fuselage Combination at a Reynolds Number of 4.4×10^6. NACA RM L50J20, 1950.

Davidson, Harold Wm.: Report of Additional (B) Wind-Tunnel Tests on a 15% Scale Model of the McDonnell XF3H-1 Airplane. GALCIT Rep. No. 550-B, Feb. 28, 1950.

Holtby, K., and Seiler, R.: Development of Lateral Controls for Flexible Swept Wings (Model B-47). Doc. No. D-9458, Contract Nos. W33-038 ac-8429 and W33-038 ac-22413, Boeing Aircraft Co., Apr. 6, 1950.

Rogallo, Francis M.: Lateral Control of Personal Aircraft at High Lift Coefficients. Aero. Eng. Rev., vol. 9, no. 8, Aug. 1950, pp. 18-22.

Rogallo, Francis M., Lowry, John G., and Fischel, Jack: Lateral-Control Devices Suitable for Use With Full-Span Flaps. Jour. Aero. Sci., vol. 17, no. 10, Oct. 1950.

Duddy, R. R.: Lift Spoilers for Lateral Control. Part I. Graduate and Student Sec., R.A.S., Apr. 1950.

Fischel, Jack, and Watson, James M.: Investigation of Spoiler Ailerons for Use as Speed Brakes on Glide-Path Controls on Two NACA 65-Series Wings Equipped With Full-Span Slotted Flaps. NACA Rep. 1034, 1951. (Supersedes NACA TN 1933.)

Kramer, Max, Zobel, Theodor W., and Esche, C. G.: Lateral Control by Spoilers at the DVL. NACA TM 1307, 1951.

Olson, Robert N., and Mead, Merrill H.: Aerodynamic Study of a Wing-Fuselage Combination Employing a Wing Swept Back 63° - Effectiveness at Supersonic Speeds of a 30-Percent Chord, 50-Percent Semispan Elevon as a Lateral Control Device. NACA RM A50K07, 1951.

May, Ellery B., Jr.: Investigation of the Effects of Leading-Edge Chord-Extensions on the Aerodynamic and Control Characteristics of Two Swept-back Wings at Mach Numbers of 1.41, 1.62, and 1.96. NACA RM L50L06a, 1951.

Conner, D. William, and Mitchell, Meade H., Jr.: Effects of Spoiler on Airfoil Pressure Distribution and Effects of Size and Location of Spoilers on the Aerodynamic Characteristics of a Tapered Unswept Wing of Aspect Ratio 2.5 at a Mach Number of 1.90. NACA RM L50L20, 1951.

Strass, H. Kurt, and Marley, Edward T.: Rocket-Model Investigation of the Rolling Effectiveness of a Fighter-Type Wing-Control Configuration at Mach Numbers From 0.6 to 1.5. NACA RM L51I28, 1951.

Gander, W. J.: Wind Tunnel Tests on the 1/7 Scale Model XF10F-1 Airplane Series 17A, 17B and 17C. G.W.T. Rep. No. 10, Grumman Aircraft Eng. Corp., Mar. 1951.

Visconti, F.: Wind Tunnel Tests on the 1/7 Scale Model XF10F-1 Airplane Series 19. G.W.T. Rep. No. 19, Grumman Aircraft Eng. Corp., Apr. 1951.

Maier, Norman M.: Wind Tunnel Tests on the 1/7 Scale Model XF10F-1 Airplane Series 19-A. G.W.T. Rep. No. 23 (Addendum No. 1 to G.W.T. Rep. No. 19), Grumman Aircraft Eng. Corp., Aug. 1951.

Wagner, Herbert A.: Bars as Trailing-Edge Control Surfaces. Tech. Memo. Rep. No. 52, U.S. Naval Air Missile Test Center (Pt. Mugu, Calif.), Oct. 15, 1951.

McLarren, Robert: Air Brakes. Aero Digest, vol. 63, no. 6, Dec. 1951, pp. 30-46.

Fischel, Jack, and Hagerman, John R.: Effect of Aspect Ratio and Sweep-back on the Low-Speed Lateral Control Characteristics of Untapered Low-Aspect-Ratio Wings Equipped With Retractable Ailerons. NACA Rep. 1091, 1952. (Supersedes NACA TN'S 2347 and 2348.)

Strass, H. Kurt: Summary of Some Effective Aerodynamic Twisting-Moment Coefficients of Various Wing-Control Configurations at Mach Numbers From 0.6 to 1.7 As Determined From Rocket-Powered Models. NACA RM L51K20, 1952.

Vogler, Raymond D.: Wind-Tunnel Investigation at High Subsonic Speeds of Spoilers of Large Projection on an NACA 65A006 Wing With Quarter-Chord Line Swept Back 32.6°. NACA RM L51L10, 1952.

Fikes, Joseph E.: Hinge-Moment and Other Aerodynamic Characteristics at Transonic Speeds of a Quarter-Span Spoiler on a Tapered 45° Sweptback Wing of Aspect Ratio 3. NACA RM L52A03, 1952.

Maki, Ralph L.: Full-Scale Wind-Tunnel Investigation of the Effects of Wing Modifications and Horizontal-Tail Location on the Low-Speed Static Longitudinal Characteristics of a 35° Swept-Wing Airplane. NACA RM A52B05, 1952.

Fitzpatrick, James E., and Woods, Robert L.: Low-Speed Lateral-Control Characteristics of an Unswept Wing With Hexagonal Airfoil Sections and Aspect Ratio 2.5 Equipped With Spoilers and With Sharp- and Thickened-Trailing-Edge Flap-Type Ailerons at a Reynolds Number of 7.6×10^6. NACA RM L52B15, 1952.

Hammond, Alexander D., and McMullan, Barbara M.: Chordwise Pressure Distribution at High Subsonic Speeds Near Midsemispan of a Tapered 35° Sweptback Wing of Aspect Ratio 4 Having NACA 65A006 Airfoil Sections and Equipped With Various Spoiler Ailerons. NACA RM L52C28, 1952.

Lockwood, Vernard E., and Fikes, Joseph E.: Control Characteristics at Transonic Speeds of a Linked Flap and Spoiler on a Tapered 45° Sweptback Wing of Aspect Ratio 3. NACA RM L52D25, 1952.

Hammond, Alexander D., and Watson, James M.: Lateral-Control Investigation at Transonic Speeds of Retractable Plug-Type Spoiler-Slot Ailerons on a Tapered 60° Sweptback Wing of Aspect Ratio 2. Transonic-Bump Method. NACA RM L52F16, 1952.

Bandettini, Angelo: An Investigation at Subsonic Speeds of the Rolling Effectiveness of a Small Perforated Spoiler on a Wing Having 45° of Sweepback. NACA RM A52G02, 1952.

Watson, James M.: Low-Speed Lateral-Control Investigation of a Flap-Type Spoiler Aileron With and Without a Deflector and Slot on a 6-Percent-Thick, Tapered, 45° Sweptback Wing of Aspect Ratio 4. NACA RM L52G10, 1952.

Schult, Eugene D., and Fields, E. M.: Free-Flight Measurements of Some Effects of Spoiler Span and Projection and Wing Flexibility on Rolling Effectiveness and Drag of Plain Spoilers on a Tapered Sweptback Wing at Mach Numbers Between 0.6 and 1.6. NACA RM L52H06a, 1952.

Fields, E. M.: Some Effects of Spoiler Height, Wing Flexibility, and Wing Thickness on Rolling Effectiveness and Drag of Unswept Wings at Mach Numbers Between 0.4 and 1.7. NACA RM L52H18, 1952.

Wiley, Harleth G., and Solomon, Martin: A Wind-Tunnel Investigation at Low Speeds of the Aerodynamic Characteristics of Various Spoiler Configurations on a Thin 60° Delta Wing. NACA RM L52J13, 1952.

Croom, Delwin R.: Characteristics of Flap-Type Spoiler Ailerons at Various Locations on a 60° Delta Wing With a Double Slotted Flap. NACA RM L52J24, 1952.

Jacobsen, Carl R.: Control Characteristics of Trailing-Edge Spoilers on Untapered Blunt Trailing-Edge Wings of Aspect Ratio 2.7 With 0° and 45° Sweepback at Mach Numbers of 1.41 and 1.96. NACA RM L52J28, 1952.

Anon. (M. de Selincourt, trans.): Investigation of Retractable Ailerons on Rectangular Wing of Profile S.0.2915. Library Trans. No. 407, Ministry of Supply, British R.A.E., May 1952.

Patterson, R. T.: The Characteristics of Trailing-Edge Spoilers. Part I - The Effects of Turbulent Boundary-Layer Thickness on the Characteristics of Two-Dimensional Spoilers at Two Supersonic Mach Numbers - TED No. TMB DE 3109. Aero Rep. 827, David W. Taylor Model Basin, Navy Dept., Aug. 1952. Part II - The Effects of Gap, Flap Deflection Angle, Thickness, and Sweep Angle on the Aerodynamic Characteristics of Two-Dimensional Spoilers, and the Pressure Distribution Near the Tip of a Partial-Span Trailing-Edge Spoiler, at a Mach Number of 1.86 - TED No. TMB DE-3109. Aero Rep. 827, David W. Taylor Model Basin, Navy Dept., Dec. 1952.

Pride, A. M.: Stall Characteristics Tests on an AD-4W Airplane With and Without Leading Edge Spoilers and Vortex Generators. Project TED No. PTR DE-331, Flight Test Div., U. S. Naval Air Test Center (Patuxent River, Md.), Aug. 14, 1952.

Henkels, W. J., Kuldell, P. D., and Brower, E. M.: Wind Tunnel Tests of a 2/9-Scale Half-Span Wing Model of the XWU-1 Airplane - TED No. TMB DE-3112. Aero. Rep. 826, David W. Taylor Model Basin, Navy Dept., Sept. 1952.

Mueller, James N.: Investigation of Spoilers at a Mach Number of 1.93 To Determine the Effects of Height and Chordwise Location on the Section Aerodynamic Characteristics of a Two-Dimensional Wing. NACA RM L52L31, 1953.

Kindell, William H.: Effects of Span and Spanwise and Chordwise Location on the Control Effectiveness of Spoilers on a 50° Sweptback Wing at Mach Numbers of 1.41 and 1.96. NACA RM L53B09, 1953.

Vogler, Raymond D.: Wind-Tunnel Investigation at High Subsonic Speeds of a Spoiler-Slot-Deflector Combination on an NACA 65A006 Wing With Quarter-Chord Line Swept Back 32.6°. NACA RM L53D17, 1953.

Czarnecki, K. R., and Lord, Douglas R.: Load Distributions Associated With Controls at Supersonic Speeds. NACA RM L53D15a, 1953.

Hammond, Alexander D., and West, Franklin E., Jr.: Loads Due to Flaps and Spoilers on Sweptback Wings at Subsonic and Transonic Speeds. NACA RM L53D29a, 1953.

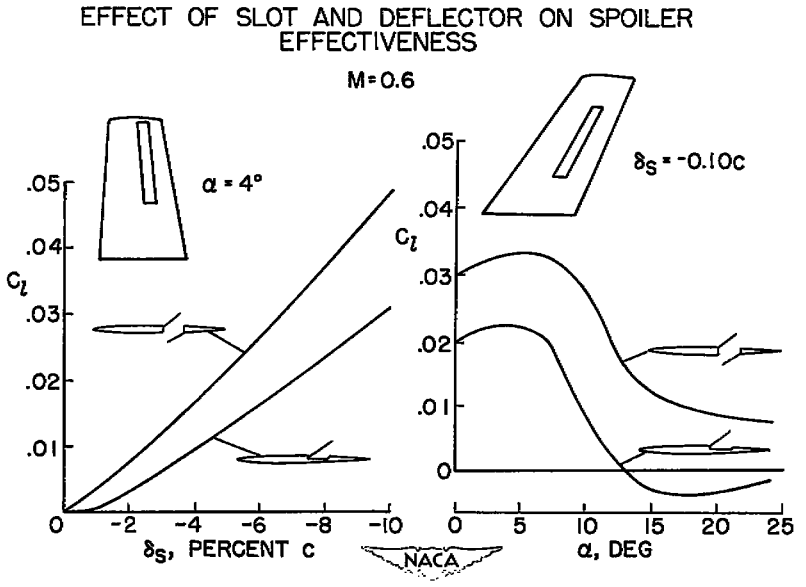

Figure 1

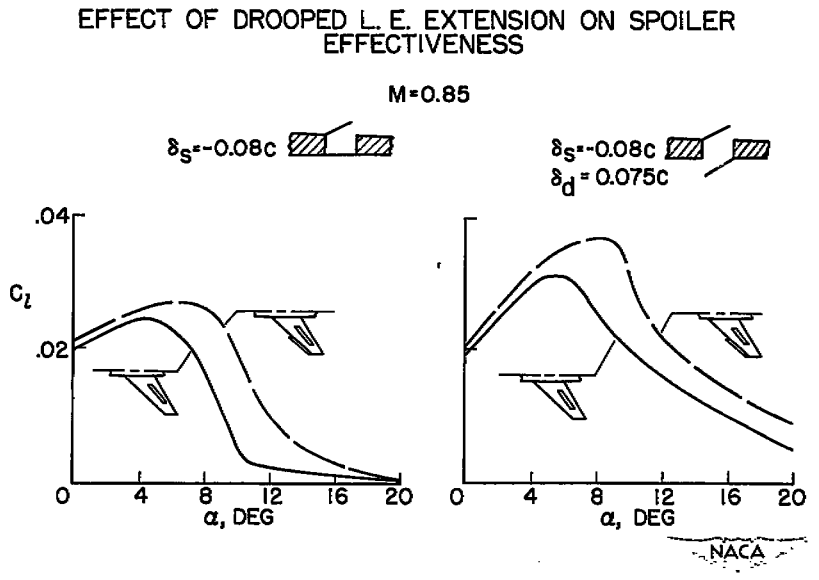

Figure 2

UNCLASSIFIED
~~CONFIDENTIAL~~

EFFECT OF SLOT AT LOW SUPERSONIC SPEEDS

M=1.20

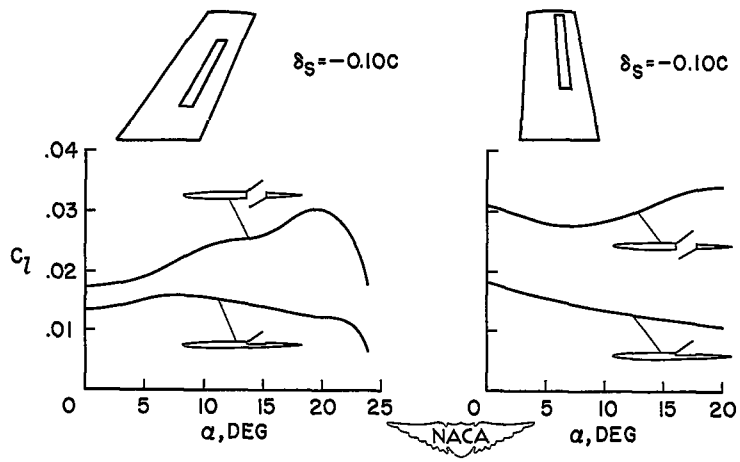

Figure 3

SATISFACTORY SPOILER LOCATION ON SWEPT WINGS

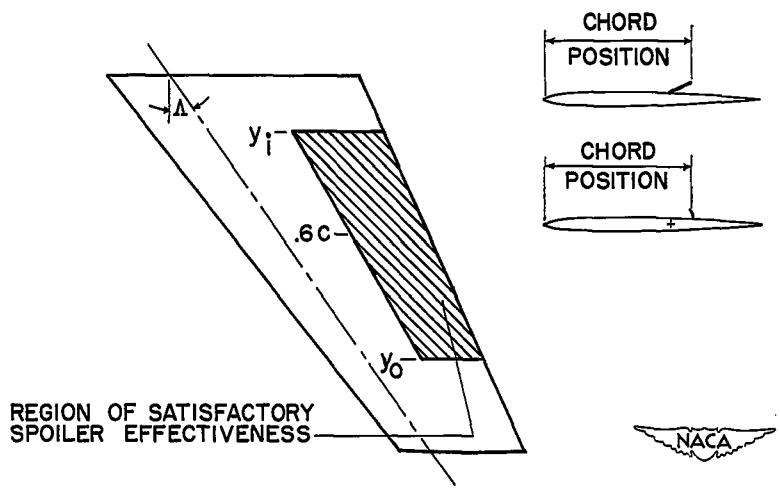

Figure 4

~~CONFIDENTIAL~~
UNCLASSIFIED

EFFECT OF SPANWISE SPOILER LOCATION ON SWEPT WINGS

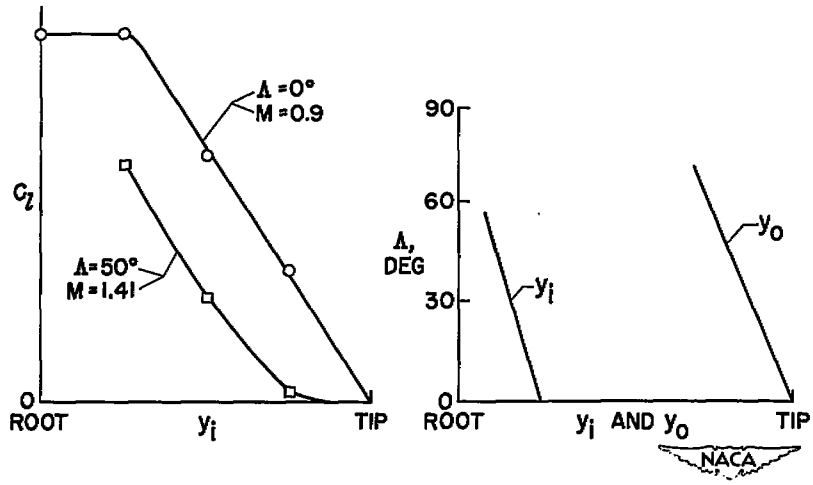

Figure 5

SPOILER LOCATION ON 60° DELTA WING

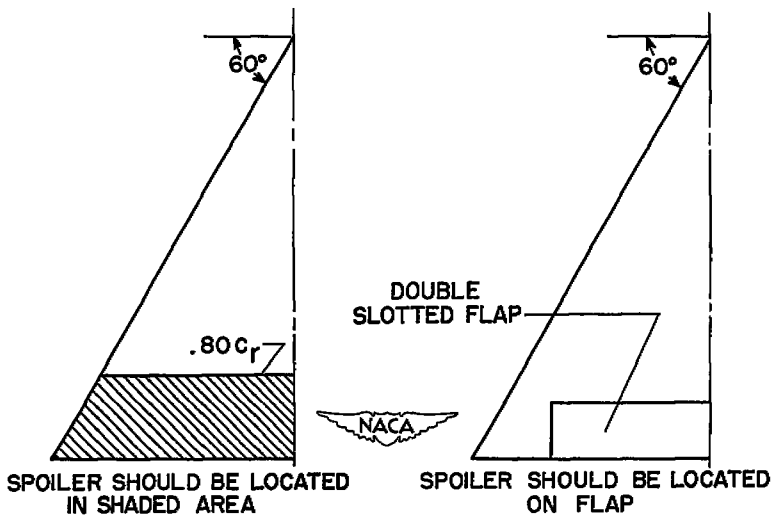

Figure 6

EFFECT OF CHORDWISE LOCATION OF SPOILERS ON 60° DELTA WING

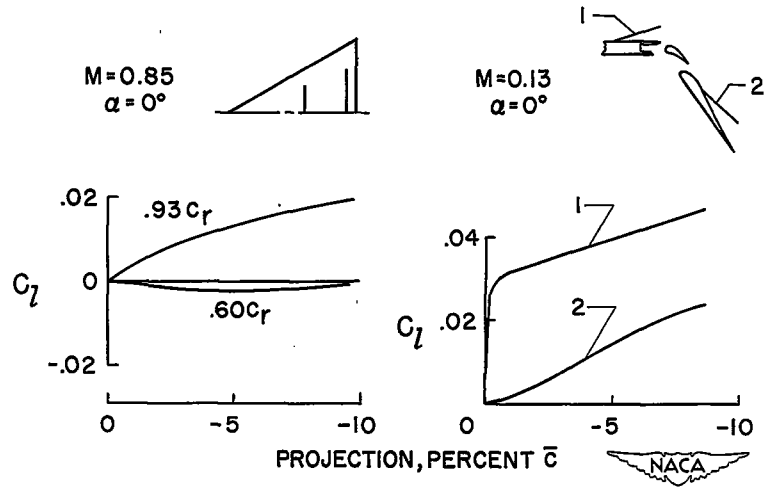

Figure 7

HINGE MOMENTS OF SPOILER AILERONS
60° DELTA WING

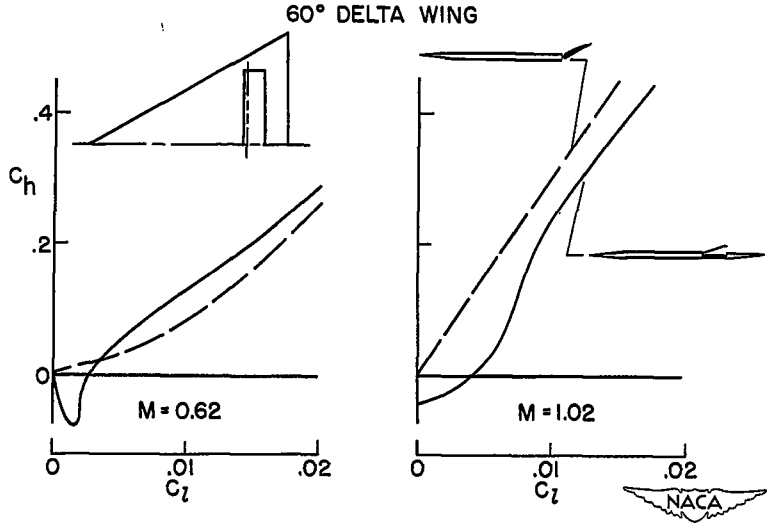

Figure 8

HINGE MOMENTS OF SPOILER-SLOT DEFLECTOR AILERONS

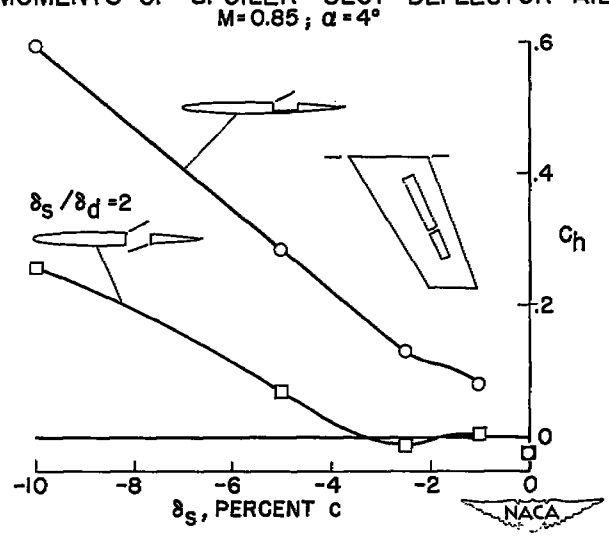

Figure 9

SPOILER CONFIGURATIONS ON A THIN WING

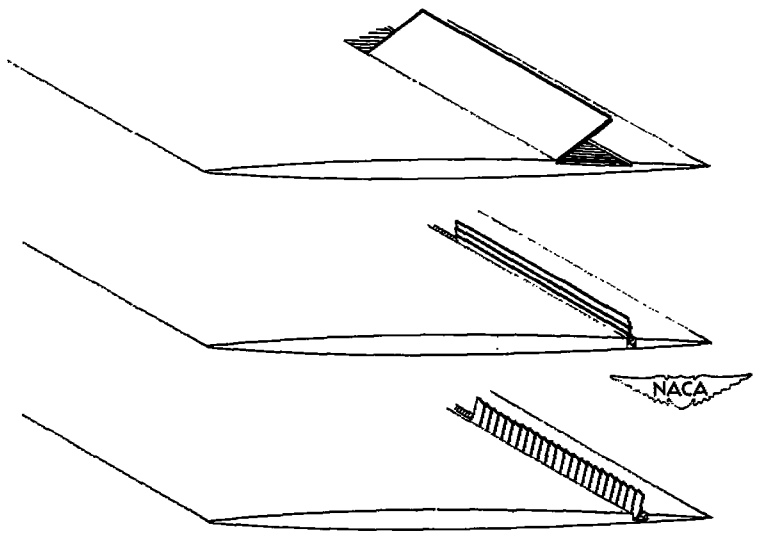

Figure 10

JET CONTROL UTILIZING AIR AT STAGNATION PRESSURE

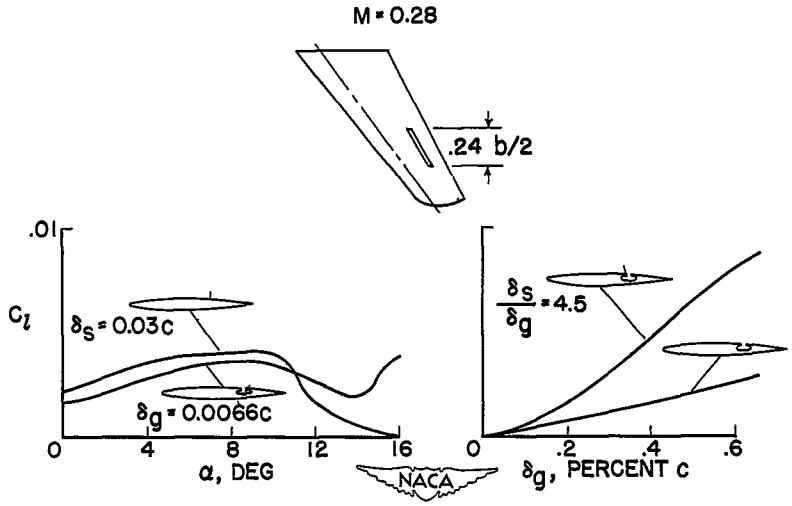

Figure 11

COMPARISON OF DRAG CHARACTERISTICS OF FLAPS AND SPOILERS

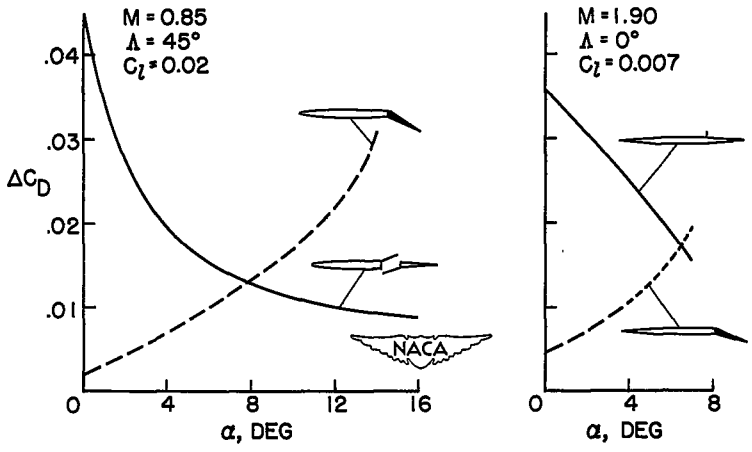

Figure 12