[redacted]

Copy 6
RM L51F25

NACA RM L51F25

OCT 3 1951

c. 2

RESEARCH MEMORANDUM

TABULATED PRESSURE COEFFICIENTS AND AERODYNAMIC CHARACTERISTICS MEASURED ON THE WING OF THE BELL X-1 AIRPLANE IN AN UNACCELERATED LOW-SPEED STALL, IN PUSH-OVERS AT MACH NUMBERS OF 0.83 AND 0.99, AND IN A PULL-UP AT A MACH NUMBER OF 1.16

By Ronald J. Knapp

Langley Aeronautical Laboratory
Langley Field, Va.

CLASSIFICATION CANCELLED

Authority Naca Res. abs. Date 11-14-56
& RN-109
By NB 11-30-56 See

FOR REFERENCE

NOT TO BE TAKEN FROM THIS ROOM

CLASSIFIED DOCUMENT

This document contains classified information affecting the National Defense of the United States within the meaning of the Espionage Act, USC 50:31 and 32. Its transmission or the revelation of its contents in any manner to an unauthorized person is prohibited by law.
Information so classified may be imparted only to persons in the military and naval services of the United States, appropriate civilian officers and employees of the Federal Government who have a legitimate interest therein, and to United States citizens of known loyalty and discretion who of necessity must be informed thereof.

NATIONAL ADVISORY COMMITTEE FOR AERONAUTICS

WASHINGTON
September 20, 1951

NACA LIBRARY
LANGLEY AERONAUTICAL LABORATORY
Langley Field, Va.

[redacted]

NASA Technical Library
3 1176 01436 8709

NATIONAL ADVISORY COMMITTEE FOR AERONAUTICS

RESEARCH MEMORANDUM

TABULATED PRESSURE COEFFICIENTS AND AERODYNAMIC CHARACTERISTICS MEASURED ON THE WING OF THE BELL X-1 AIRPLANE IN AN UNACCELERATED LOW-SPEED STALL, IN PUSH-OVERS AT MACH NUMBERS OF 0.83 AND 0.99, AND IN A PULL-UP AT A MACH NUMBER OF 1.16

By Ronald J. Knapp

SUMMARY

Tabulated pressure coefficients and aerodynamic characteristics are presented for six spanwise stations on the left wing of the Bell X-1 research airplane. These data were obtained in an unaccelerated low-speed stall, in push-overs at Mach numbers of approximately 0.83 and 0.99, and in a pull-up at a Mach number of approximately 1.16.

INTRODUCTION

Flight tests are being conducted to determine the spanwise and chordwise loading on the wing of the Bell X-1 research airplane throughout the transonic and low-supersonic speed range. The purpose of the present paper is to present the basic low-speed data obtained in an unaccelerated stall, and the data obtained in push-overs at Mach numbers of approximately 0.83 and 0.99 and in a pull-up at a Mach number of approximately 1.16. In order that this data be made available at an early date it is being presented here in tabular form with no analysis. A report presenting an analysis of these data is being prepared. These data supplement the data of references 1, 2, and 3. Reference 4 presents analyzed data for station D (64.4 percent test panel semispan) for the Mach number and normal-force coefficient range of reference 2.

[redacted]

SYMBOLS

M	free-stream Mach number
n	normal load factor
W	airplane weight, pounds
S	wing area, including area projected through fuselage (130 sq ft)
S'	area of test panel outboard of station A (99.4 sq ft)
C_{N_A}	airplane normal-force coefficient $\left(\frac{nW}{qS}\right)$
δ_{a_L}	left aileron angle, degrees
$b/2$	wing semispan (14 ft)
$b'/2$	spanwise distance from station A to wing tip (11.42 ft)
c	local wing chord parallel to plane of symmetry, feet
$\bar{c}$	average chord of test panel, feet (S'/b')
c'	mean aerodynamic chord of the test panel (M.A.C.), feet $\left(\frac{2}{S'}\int_0^{b'/2} c^2 dy'\right)$
x	chordwise distance from leading edge of local chord, feet
y	spanwise distance outboard of airplane center line, feet
y'	spanwise distance outboard of station A, feet
q	free-stream dynamic pressure, pounds per square foot
p_o	free-stream static pressure, pounds per square foot
p	local static pressure, pounds per square foot
p_u	local static pressure on upper surface, pounds per square foot

p_l local static pressure on lower surface, pounds per square foot

P pressure coefficient $\left(\frac{p - p_o}{q}\right)$

P_R resultant pressure coefficient $\left(\frac{p_l - p_u}{q}\right)$

c_n section normal-force coefficient $\left(\int_0^1 P_R \, d\frac{x}{c}\right)$

$c_{m_{c/4}}$ section pitching-moment coefficient about 0.25-local-chord point $\left(\int_0^1 -P_R\left(\frac{x}{c} - 0.25\right) d\frac{x}{c}\right)$

c_m section pitching-moment coefficient about a line perpendicular to longitudinal axis of airplane, passing through 0.25-chord point of mean aerodynamic chord of test panel $\left(\int_0^1 -P_R\left(\frac{x}{c} - \frac{0.40c - 0.15c'}{c}\right) d\frac{x}{c}\right)$

C_N' test panel normal-force coefficient $\left(\int_0^1 c_n \frac{c}{\bar{c}} \, d\frac{2y'}{b'}\right)$

C_B' test panel bending-moment coefficient about station A $\left(\int_0^1 c_n \frac{c}{\bar{c}} \frac{2y'}{b'} \, d\frac{2y'}{b'}\right)$

C_M' test panel pitching-moment coefficient about 0.25 panel mean aerodynamic chord $\left(\frac{\bar{c}}{c'}\int_0^1 c_m \left(\frac{c}{\bar{c}}\right)^2 d\frac{2y'}{b'}\right)$

x_{cp} test panel chordwise center of pressure, percent of c'

y'_{cp} test panel lateral center of pressure, percent of b'/2

DESCRIPTION OF AIRPLANE AND TEST PANEL

The Bell X-1 research airplane used in these tests is shown in figure 1. A three-view drawing of the airplane showing the general over-all dimensions is given as figure 2.

The airplane has a 10-percent-thick wing and incorporates an NACA 65-110 airfoil section with slight modifications. The ordinates of the airfoil section are given in table 1. Over the landing flap, the section is modified rearward of the 0.85-chord point to give a finite trailing-edge thickness; over the ailerons, the cusp is replaced by a straight taper from 0.85 chord to the trailing edge (reference 5). A line passing through the 0.40-chord point of the local chords is perpendicular to the longitudinal axis of the airplane. The wing has an incidence angle with respect to the fuselage axis of 2.5° at the root and 1.5° at the tip, an aspect ratio of 6, and a taper ratio of 0.5. The skin thickness is approximately 0.4 inch at the root and 0.15 inch at the tip. The wing was painted and polished during the tests, but no refined filling or smoothing was attempted.

The test panel considered in these tests is that part of the wing outboard of station A as shown in figure 3(a). Station A is approximately 3 inches outboard of the wing-fuselage juncture and 31 inches outboard of the center line of the airplane.

INSTRUMENTATION

Standard NACA recording instruments were used to obtain airspeed, pressure altitude, normal acceleration, and control positions. Wing-surface pressures were measured by two NACA multiple-recording manometers. All records were synchronized by a common timer.

Free-stream static and dynamic pressures were recorded with a standard high-speed Kollsman pitot-static head located ahead of the fuselage nose. The static vents were located at a distance of 0.6 maximum fuselage diameters ahead of the fuselage nose.

Wing-surface pressures were measured from flush-type orifices installed in the wing skin. The spanwise and chordwise locations of the orifices are shown in figure 3. The orifices were connected to the instrument compartment by $\frac{1}{8}$-inch inside-diameter aluminum tubing. The length of aluminum tubing varied from about 2 feet at the root

station to about 14 feet at the tip station. The aluminum tubing was connected to the manometer cells by $\frac{3}{16}$-inch inside-diameter rubber tubing. Approximately 3 feet of rubber tubing were used on each line.

TESTS

The data presented herein were obtained in a low-speed unaccelerated stall at 17,000 feet altitude, a push-over at a Mach number of approximately 0.83 at 27,000 feet altitude, and a pull-up followed by a push-over at 40,000 feet at Mach numbers of approximately 1.16 and 0.99, respectively. The ailerons were held close to neutral and the rolling velocities were low throughout these tests.

METHODS

The test panel is treated herein as an isolated lifting surface and the coefficients obtained from the pressure distributions are based on the geometric properties of the test panel (fig. 3(a)).

The pressure differential between the upper and lower surface was measured at stations A, B, C, E, and F (fig. 3(a)). At station D, individual surface pressures were measured relative to instrument compartment pressure. Static pressure at the pitot-static head was also measured relative to compartment pressure. The measured static pressure was corrected to free-stream static pressure by use of the radar-tracking method of reference 6.

Previous ground tests indicated that lag present in measuring wing-surface pressures was negligible. The effects of lag therefore have been neglected in these data.

In a few instances, the manometer cells did not have sufficient range to measure all pressures encountered. Wherever possible, values were estimated by extrapolating the film trace and by interpolating between the time histories of values from surrounding orifices.

Section coefficients were obtained by mechanical integration of the chordwise pressure distributions. Panel coefficients were obtained by the mechanical integration of the spanwise load distributions.

ACCURACY

Estimations based on the recording pressure instruments and methods of calibration indicate that the accuracies of the reported quantities are as follows:

Mach number . . . . . ±0.01
P . . . . . ±0.02

The accuracy of the integrated quantities, based on the accuracies of the pressure recorders, integrative methods, and the coverage of the test data is estimated to be:

c_n . . . . . ±0.05
$c_{m_{c/4}}$ . . . . . ±0.006

Where it was possible to estimate closely values of pressure that were greater than the cell range, values are presented, but the accuracies given here do not apply to these estimates.

PRESENTATION OF RESULTS

Table 2 presents the measured pressure coefficients and aerodynamic characteristics obtained in a low-speed unaccelerated stall. Tables 3 and 4 present similar data for push-overs at Mach numbers of approximately 0.83 and 0.99. Table 5 presents similar data for a pull-up at a Mach number of approximately 1.16.

All estimates of off-scale pressure coefficients have been noted in the data tables. For cases where estimation of off-scale values was not feasible, no value has been given.

Langley Aeronautical Laboratory
National Advisory Committee for Aeronautics
Langley Field, Va.

REFERENCES

1. Carner, H. Arthur, and Payne, Mary M.: Tabulated Pressure Coefficients and Aerodynamic Characteristics Measured on the Wing of the Bell X-1 Airplane in Level Flight at Mach Numbers from 0.79 to 1.00 and in a Pull-Up at a Mach Number of 0.96. NACA RM L50H25, 1950.

2. Knapp, Ronald J., and Wilken, Gertrude V.: Tabulated Pressure Coefficients and Aerodynamic Characteristics Measured on the Wing of the Bell X-1 Airplane in Pull-Ups at Mach Numbers from 0.53 to 0.99. NACA RM L50H28, 1950.

3. Smith, Lawrence A.: Tabulated Pressure Coefficients and Aerodynamic Characteristics Measured on the Wing of the Bell X-1 Airplane in an Unaccelerated Stall and in Pull-Ups at Mach Numbers of 0.74, 0.75, 0.94, and 0.97. NACA RM L51B23, 1951.

4. Carner, H. Arthur, and Knapp, Ronald J.: Flight Measurements of the Pressure Distribution on the Wing of the X-1 Airplane (10-Percent Thick Wing) over a Chordwise Station near the Midspan, in Level Flight at Mach Numbers from 0.79 to 1.00 and in a Pull-Up at a Mach Number of 0.96. NACA RM L50H04, 1950.

5. Ormsby, C. A.: Aerodynamic Design of the MX-653 Wing. Rep. No. 44-943-008. Bell Aircraft Corp., June 5, 1945.

6. Zalovcik, John A.: A Radar Method of Calibrating Airspeed Installations on Airplanes in Maneuvers at High Altitudes and at Transonic and Supersonic Speeds. NACA Rep. 985, 1950. (Formerly TN 1979.)

TABLE 1

AIRFOIL ORDINATES OF THE BELL X-1 WING

[Abscissa and ordinates in percent of local chord, c]

Abscissa (percent chord, c)	Ordinate, percent chord, c			
	Flap stations		Aileron stations	
	Upper surface	Lower surface	Upper surface	Lower surface
0	0	0	0	0
.50	.796	-.746	.796	-.746
.75	.966	-.896	.966	-.896
1.25	1.222	-1.115	1.222	-1.115
2.50	1.667	-1.481	1.667	-1.481
5.00	2.334	-2.018	2.334	-2.018
7.50	2.859	-2.435	2.859	-2.435
10.00	3.298	-2.781	3.298	-2.781
15.00	4.002	-3.329	4.002	-3.329
20.00	4.541	-3.745	4.541	-3.745
25.00	4.951	-4.056	4.951	-4.056
30.00	5.246	-4.274	5.246	-4.274
35.00	5.439	-4.409	5.439	-4.409
40.00	5.532	-4.461	5.532	-4.461
45.00	5.511	-4.416	5.511	-4.416
50.00	5.364	-4.261	5.364	-4.261
55.00	5.078	-3.983	5.078	-3.983
60.00	4.682	-3.611	4.682	-3.611
65.00	4.197	-3.167	4.197	-3.167
70.00	3.642	-2.670	3.642	-2.670
75.00	3.032	-2.137	3.032	-2.137
80.00	2.385	-1.589	2.385	-1.589
85.00	1.721	-1.048	1.721	-1.048
90.00	1.100	-.687	1.148	-.698
95.00	.525	-.295	.574	-.349
100.00	0	0	0	0
L.E. radius = 0.687 percent chord, c				

TABLE 2

TABULATION OF PRESSURE COEFFICIENTS AND AERODYNAMIC CHARACTERISTICS

OF THE X-1 WING; UNACCELERATED STALL

(a) $M = 0.541$; $C_{N_A} = 0.206$; $\delta_{a_L} = 0^\circ$

Orifice	Pressure coefficients						
	Station A*	Station B*	Station C*	Station D		Station E*	Station F*
				Upper	Lower		
1	-----	-----	-----	0.901	-----	-----	-----
2	1.148	1.091	1.119	-.459	0.463	1.218	0.771
3	.870	.920	.855	-.528	.299	.907	.507
4	.666	.706	.711	-.598	-----	.644	-----
5	-----	.515	.609	-----	.031	.515	.343
6	.346	.398	.385	-.491	-.106	.385	.236
7	-----	.328	.323	-.491	-.184	-----	.169
8	.204	.263	.266	-.511	-----	.316	.124
9	-----	-----	-----	-.476	-----	-----	-----
10	.199	.199	.281	-.486	-.220	-----	.142
11	.137	.169	-----	-.412	-.238	.236	.112
12	.122	.137	.176	-.374	-.213	.211	-----
13	.045	.149	.132	-.307	-----	-----	.087
14	.089	-----	-----	-.262	-.136	.119	.030
15	.032	.075	.087	-.218	-.093	-----	.057
16	.001	.001	.045	-----	-.031	.099	-----
17	-.050	-.050	.057	-.088	.026	.045	.015
18	-----	-.001	-----	-----	-----	-----	-----
19	-----	-.001	-----	.043	-----	-----	.025
20	-----	-----	-----	.105	-----	-.020	-.052
21	-----	-----	-----	.105	-----	-----	-----

Integrated section aerodynamic characteristics						
c_n	0.201	0.231	0.250	0.263	0.252	0.137
$c_{m_{c/4}}$	0.009	0.006	-0.002	-0.010	-0.002	0.003

Integrated panel aerodynamic characteristics	
$C_N' = 0.228$	
$C_B' = 0.100$	y'_{cp} (percent $b'/2$) = 43.6
$C_M' = 0.001$	x_{cp} (percent c') = 24.6

*Resultant pressure coefficient.

TABLE 2

TABULATION OF PRESSURE COEFFICIENTS AND AERODYNAMIC CHARACTERISTICS

OF THE X-1 WING; UNACCELERATED STALL - Continued

(b) $M = 0.522$; $C_{N_A} = 0.265$; $\delta_{a_L} = 0.20^{\circ}$ down

Orifice	Pressure coefficients						
	Station A*	Station B*	Station C*	Station D		Station E*	Station F*
				Upper	Lower		
1	-----	-----	-----	0.704	-----	-----	-----
2	1.696	1.561	1.572	-.712	0.596	1.629	1.066
3	1.211	1.211	1.112	-.739	.427	1.219	7.46
4	.910	.958	.948	-.763	-----	.840	-----
5	-----	.676	.813	-----	.093	.665	.431
6	.456	.522	.525	-.575	-.044	.479	.291
7	-----	.417	.401	-.548	-.141	-----	.215
8	.283	.350	.336	-.556	-----	.377	.178
9	-----	-----	-----	-.507	-----	-----	-----
10	.248	.250	.345	-.518	-.182	-----	.167
11	.188	.226	-----	-.440	-.203	.275	.121
12	.175	.175	.229	-.408	-.179	.256	-----
13	.083	.175	.188	-.327	-----	-----	.094
14	.132	-----	-----	-.273	-.122	.143	.043
15	.048	.107	.102	-.230	-.085	-----	.062
16	.027	.032	.065	-----	-.023	.108	-----
17	-.032	-.038	.081	-.098	-.026	.067	.032
18	-----	-.001	-----	-----	-----	-----	-----
19	-----	.002	-----	.031	-----	-----	.035
20	-----	-----	-----	.098	-----	-.022	-.040
21	-----	-----	-----	.085	-----	-----	-----

Integrated section aerodynamic characteristics						
c_n	0.268	0.310	0.338	0.341	0.308	0.184
$c_{m_{c/4}}$	0.012	0.004	-0.004	-0.006	-0.002	0.002

Integrated panel aerodynamic characteristics	
$C_{N'} = 0.301$ $C_{B'} = 0.130$ $C_{M'} = 0.001$	y'_{cp} (percent $b'/2$) = 43.2 x_{cp} (percent c') = 24.6

*Resultant pressure coefficient

TABLE 2

TABULATION OF PRESSURE COEFFICIENTS AND AERODYNAMIC CHARACTERISTICS

OF THE X-1 WING; UNACCELERATED STALL - Continued

(c) $M = 0.509$; $C_{N_A} = 0.363$; $\delta_{a_L} = 10^{\circ}$ up

Orifice	Pressure coefficients						
	Station A*	Station B*	Station C*	Station D		Station E*	Station F*
				Upper	Lower		
1	-----	-----	-----	0.344	-----	-----	-----
2	2.417	2.238	2.380	-1.056	0.766	2.283	1.565
3	1.725	1.668	1.545	-1.053	.589	1.568	1.049
4	1.254	1.297	1.263	-.965	-----	1.169	-----
5	-----	.912	1.009	-----	.207	.906	.570
6	.584	.698	.684	-.643	.067	.639	.391
7	-----	.519	.516	-.594	-.067	-----	.279
8	.353	.448	.433	-.586	-----	.473	.228
9	-----	-----	-----	-.534	-----	-----	-----
10	.299	.319	.404	-.546	-.144	-----	.200
11	.228	.291	-----	-.452	-.152	.325	.148
12	.219	.231	.279	-.417	-.138	.285	-----
13	.117	.214	.214	-.332	-----	-----	.123
14	.151	-----	-----	-.275	-.081	.171	.066
15	.071	.128	.128	-.229	-.047	-----	.077
16	.037	.046	.086	-----	-.013	.123	-----
17	-.001	-.002	.100	-.095	.042	.071	.034
18	-----	.001	-----	-----	-----	-----	-----
19	-----	.028	-----	.030	-----	-----	.037
20	-----	-----	-----	.099	-----	-.023	-.051
21	-----	-----	-----	.082	-----	-----	-----

Integrated section aerodynamic characteristics						
c_n	0.361	0.412	0.430	0.441	0.403	0.243
$c_{m_{c/4}}$	0.015	0.010	-0.002	-0.005	0.002	0.007

Integrated panel aerodynamic characteristics	
$C_N' = 0.394$ $C_B' = 0.168$ $C_M' = 0.004$	y'_{cp} (percent $b'/2$) = 42.7 x_{cp} (percent c') = 26.0

*Resultant pressure coefficient.

TABLE 2

TABULATION OF PRESSURE COEFFICIENTS AND AERODYNAMIC CHARACTERISTICS

OF THE X-1 WING; UNACCELERATED STALL - Continued

(d) $M = 0.436$; $C_{N_A} = 0.455$; $\delta_{a_L} = 0.35^{\circ}$ down

Orifice	Pressure coefficients						
	Station A*	Station B*	Station C*	Station D		Station E*	Station F*
				Upper	Lower		
1	-----	-----	-----	-0.017	-----	-----	-----
2	2.558	2.442	2.394	-1.306	0.829	2.650	1.796
3	2.027	1.955	1.852	-1.214	.649	1.836	1.205
4	1.484	1.516	1.472	-1.095	-----	1.333	-----
5	-----	1.042	1.117	-----	.222	.998	.678
6	.678	.774	.758	-.751	.103	.710	.467
7	-----	.579	.579	-.608	-.049	-----	.299
8	.419	.519	.499	-.616	-----	.527	.239
9	-----	.347	-----	-.556	-----	-----	-----
10	.351	-----	.479	-.568	-.117	-----	.215
11	.279	.323	-----	-.476	-.149	.379	.160
12	.215	.259	.299	-.424	-.117	.323	-----
13	.140	.259	.251	-.336	-----	-----	.140
14	.196	-----	-----	-.308	-.069	.200	.088
15	.092	.160	.152	-.253	-.057	-----	.056
16	.072	.064	.108	-----	.023	.160	-----
17	-.001	.001	.120	-.109	.055	.100	.048
18	-----	.002	-----	-----	-----	-----	-----
19	-----	.040	-----	.023	-----	-----	.052
20	-----	-----	-----	.091	-----	-.032	-.040
21	-----	-----	-----	.063	-----	-----	-----

Integrated section aerodynamic characteristics						
c_n	0.427	0.466	0.486	0.504	0.468	0.275
$c_{m_{c/4}}$	0.020	0.008	0.003	-0.004	0.000	0.010

Integrated panel aerodynamic characteristics	
$C_{N'} = 0.449$ $C_{B'} = 0.194$ $C_{M'} = 0.006$	y'_{cp} (percent b'/2) = 43.1 x_{cp} (percent c') = 23.7

*Resultant pressure coefficient.

TABLE 2

TABULATION OF PRESSURE COEFFICIENTS AND AERODYNAMIC CHARACTERISTICS

OF THE X-1 WING; UNACCELERATED STALL - Continued

(e) $M = 0.388$; $C_{N_A} = 0.558$; $\delta_{a_L} = 0.40^\circ$ down

Orifice	Pressure coefficients						
	Station A*	Station B*	Station C*	Station D		Station E*	Station F*
				Upper	Lower		
1	-----	-----	-----	------	-----	-----	-----
2	3.412	3.191	2.996	-1.850	0.941	3.335	2.360
3	2.555	2.463	2.411	-1.650	.802	2.381	1.565
4	1.888	1.888	1.868	-1.404	-----	1.729	-----
5	-----	1.313	1.396	------	.336	1.283	.821
6	.847	.965	.949	-.824	.100	.872	.554
7	-----	.718	.708	-.721	-.039	-----	.410
8	.539	.616	.611	-.732	-----	.616	.308
9	-----	-----	-----	-.644	-----	-----	-----
10	.410	.446	.600	-.655	-.095	-----	.277
11	.349	.395	-----	-.532	-.136	.426	.205
12	.334	.318	.364	-.491	-.116	.369	-----
13	.195	.308	.292	-.414	-----	-----	.180
14	.251	-----	-----	-.362	-.070	.246	.118
15	.128	.205	.195	-.301	-.054	-----	.082
16	.092	.103	.139	------	-.003	.169	-----
17	-.002	.004	.154	-.172	.038	.092	.062
18	-----	.062	-----	------	-----	-----	-----
19	-----	.051	-----	-.029	-----	-----	.067
20	-----	-----	-----	.053	-----	-.041	.000
21	-----	-----	-----	-.003	-----	-----	-----

Integrated section aerodynamic characteristics						
c_n	0.540	0.588	0.608	0.626	0.558	0.356
$c_{m_{c/4}}$	0.028	0.010	-0.003	-0.007	0.010	0.008

Integrated panel aerodynamic characteristics	
$C_N' = 0.559$	
$C_B' = 0.239$	y'_{cp} (percent $b'/2$) = 42.7
$C_M' = 0.008$	x_{cp} (percent c') = 24.6

*Resultant pressure coefficient.

TABLE 2

TABULATION OF PRESSURE COEFFICIENTS AND AERODYNAMIC CHARACTERISTICS

OF THE X-1 WING; UNACCELERATED STALL - Continued

(f) $M = 0.338$; $C_{N_A} = 0.650$; $\delta_{a_L} = 0.20^\circ$ down

Orifice	Pressure coefficients						
	Station A*	Station B*	Station C*	Station D		Station E*	Station F*
				Upper	Lower		
1	-----	-----	-----	------	-----	-----	-----
2	4.052	3.680	3.598	-2.183	1.029	3.494	2.729
3	3.032	2.860	3.156	-1.852	.919	2.798	1.826
4	2.205	2.136	2.150	-1.569	-----	1.999	-----
5	-----	1.530	1.620	------	.429	1.475	.951
6	.992	1.103	1.068	-.866	.202	.999	.655
7	-----	.779	.813	-.722	.030	-----	.400
8	.565	.689	.634	-.728	-----	.689	.345
9	-----	-----	-----	-.604	-----	-----	-----
10	.455	.503	.641	-.660	-.053	-----	.296
11	.386	.469	-----	-.522	-.060	.434	.193
12	.372	.379	.414	-.453	-.074	.400	-----
13	.234	.345	.310	-.384	-----	-----	.179
14	.269	-----	-----	-.343	-.039	.248	.090
15	.124	.221	.227	-.294	-.025	-----	.096
16	.138	.110	.165	------	.030	.186	-----
17	.006	.005	.159	-.163	.085	.124	.117
18	-----	.006	-----	------	-----	-----	-----
19	-----	.069	-----	-.005	-----	-----	.090
20	-----	-----	-----	.071	-----	-.055	.000
21	-----	-----	-----	-.005	-----	-----	-----

Integrated section aerodynamic characteristics						
c_n	0.618	0.666	0.698	0.705	0.628	0.392
$c_{m_{c/4}}$	0.031	0.016	0.006	-0.008	0.009	0.009

Integrated panel aerodynamic characteristics	
$C_N' = 0.632$ $C_B' = 0.269$ $C_M' = 0.011$	y'_{cp} (percent $b'/2$) = 42.5 x_{cp} (percent c') = 23.2

*Resultant pressure coefficient.

TABLE 2

TABULATION OF PRESSURE COEFFICIENTS AND AERODYNAMIC CHARACTERISTICS

OF THE X-1 WING; UNACCELERATED STALL - Continued

(g) $M = 0.315$; $C_{N_A} = 0.745$; $\delta_{a_L} = 0.20^\circ$ down

Orifice	Pressure coefficients						
	Station A*	Station B*	Station C*	Station D		Station E*	Station F*
				Upper	Lower		
1	-----	-----	-----	------	-----	-----	-----
2	3.957	4.301	4.173	-2.978	1.074	4.053	3.261
3	3.901	3.357	3.221	-2.627	.938	3.245	2.142
4	3.118	2.478	2.438	-1.859	-----	2.238	-----
5	-----	1.735	1.727	------	.435	1.679	1.071
6	1.111	1.263	1.199	-1.020	.195	1.159	.727
7	-----	.903	.879	-.844	.035	-----	.504
8	.655	.799	.735	-.836	-----	.799	.400
9	-----	-----	-----	-.700	-----	-----	-----
10	.504	.584	.679	-.724	-.101	-----	.320
11	.424	.520	-----	-.596	-.085	.560	.224
12	.392	.424	.480	-.564	-.069	.480	-----
13	.248	.376	.360	-.428	-----	-----	.208
14	.312	-----	-----	-.380	-.005	.264	.104
15	.200	.256	.224	-.325	-.005	-----	.112
16	.184	.128	.192	------	.035	.192	-----
17	.080	.006	.184	-.205	.059	.144	.096
18	-----	.096	-----	------	-----	-----	-----
19	-----	.080	-----	-.085	-----	-----	.104
20	-----	-----	-----	-.005	-----	.000	.000
21	-----	-----	-----	-.077	-----	-----	-----

Integrated section aerodynamic characteristics						
c_n	0.732	0.769	0.765	0.807	0.739	0.462
$c_{m_{c/4}}$	0.032	0.017	0.005	-0.006	0.006	0.014

Integrated panel aerodynamic characteristics	
$C_N' = 0.725$	
$C_B' = 0.309$	y'_{cp} (percent $b'/2$) = 42.6
$C_M' = 0.012$	x_{cp} (percent c') = 23.4

*Resultant pressure coefficient.

TABLE 2

TABULATION OF PRESSURE COEFFICIENTS AND AERODYNAMIC CHARACTERISTICS

OF THE X-1 WING; UNACCELERATED STALL - Concluded

(h) $M = 0.302$; $C_{N_A} = 0.859$; $\delta_{a_L} = 0.10^{\circ}$ up

Orifice	Pressure coefficients						
	Station A*	Station B*	Station C*	Station D		Station E*	Station F*
				Upper	Lower		
1	-----	-----	-----	------	-----	------	-----
2	3.153	3.659	4.742	-1.941	1.090	2.900	3.843
3	2.987	3.712	3.668	-1.845	.950	2.838	2.638
4	2.795	3.406	2.751	-2.072	-----	2.821	-----
5	-----	2.376	2.140	------	.514	2.489	1.266
6	1.555	1.441	1.354	-1.408	.295	1.520	.830
7	-----	.934	.961	-.779	.094	-----	.585
8	.655	.812	.803	-.735	-----	.812	.480
9	-----	-----	-----	-.631	-----	-----	-----
10	.454	.638	.681	-.561	.007	-----	.376
11	.410	.472	-----	-.473	-.045	.454	.288
12	.376	.349	.419	-.412	-.063	.463	-----
13	.245	.349	.306	-.369	-----	-----	.262
14	.314	-----	-----	-.342	-.037	.288	.148
15	.157	.245	.245	-.316	.007	-----	.157
16	.201	.140	.210	------	.007	.210	-----
17	.114	.131	.218	-.238	.059	.157	.148
18	-----	.157	-----	-----	-----	-----	-----
19	-----	.131	-----	-.168	-----	-----	.131
20	-----	-----	-----	-.080	-----	.000	.017
21	-----	-----	-----	-.194	-----	-----	-----

Integrated section aerodynamic characteristics						
c_n	0.792	0.876	0.851	0.866	0.831	0.558
$c_{m_{c/4}}$	0.027	0.024	0.011	-0.003	0.017	0.013

Integrated panel aerodynamic characteristics	
$C_N' = 0.811$	
$C_B' = 0.347$	y'_{cp} (percent b'/2) = 42.8
$C_M' = 0.016$	x_{cp} (percent c') = 23.0

*Resultant pressure coefficient.

TABLE 3

TABULATION OF PRESSURE COEFFICIENTS AND AERODYNAMIC CHARACTERISTICS

OF THE X-1 WING; PUSH-OVER AT $M \approx 0.83$

(a) $M = 0.829$; $C_{N_A} = 0.408$; $\delta_{a_L} = 0.40^{\circ}$ down

Orifice	Pressure coefficients						
	Station A*	Station B*	Station C*	Station D		Station E*	Station F*
				Upper	Lower		
1	-----	-----	-----	1.022	-----	-----	-----
2	1.437	1.238	1.281	-.276	0.623	1.462	1.170
3	1.447	1.191	1.089	-.427	.377	1.272	.921
4	1.215	1.031	.872	-.615	-----	1.136	-----
5	-----	.935	.926	-----	.143	.790	.590
6	.679	.784	.743	-.794	-.057	.704	.517
7	-----	.789	.743	-.837	-.225	-----	.402
8	.558	.699	.658	-.943	-----	.660	.341
9	.631	-----	-----	-.977	-----	-----	-----
10	.561	.500	.237	-1.017	-.349	-----	.341
11	-----	.497	-----	-.522	-.507	.343	.268
12	.309	-.017	-.051	-.463	-.548	-.051	-----
13	.165	.119	.156	-.461	-----	-----	.409
14	.083	-----	-----	-.471	-.225	.312	.144
15	.042	.192	.266	-.468	-.162	-----	.076
16	.039	.166	.299	-----	-.106	.382	-----
17	-.020	.127	.407	-.400	-.042	.312	.020
18	-----	.120	-----	-----	-----	-----	-----
19	-----	.136	-----	-.235	-----	-----	.044
20	-----	-----	-----	-.120	-----	.047	-.046
21	-----	-----	-----	-.115	-----	-----	-----

Integrated section aerodynamic characteristics						
c_n	0.424	0.451	0.444	0.444	0.466	0.304
$c_{m_{c/4}}$	-0.001	-0.015	-0.029	-0.040	-0.035	-0.007

Integrated panel aerodynamic characteristics	
$C_N' = 0.426$ $C_B' = 0.184$ $C_M' = -0.022$	y'_{cp} (percent $b'/2$) = 43.1 x_{cp} (percent c') = 30.2

*Resultant pressure coefficient.

TABLE 3

TABULATION OF PRESSURE COEFFICIENTS AND AERODYNAMIC CHARACTERISTICS

OF THE X-1 WING; PUSH-OVER AT $M \approx 0.83$ - Continued

(b) $M = 0.827$; $C_{N_A} = 0.293$; $\delta_{a_L} = 0.75^{\circ}$ down

Orifice	Pressure coefficients						
	Station A*	Station B*	Station C*	Station D		Station E*	Station F*
				Upper	Lower		
1	-----	-----	-----	1.116	-----	-----	-----
2	0.842	0.716	0.631	-.057	0.430	1.045	0.682
3	.750	.682	.528	-.260	.294	.767	.537
4	.644	.648	.586	-.464	-----	.525	-----
5	-----	.653	.648	-----	.023	.528	.457
6	.402	.511	.508	-.655	-.161	.494	.375
7	-----	.491	.503	-.751	-.314	-----	.319
8	.320	.443	.409	-.780	-----	.499	.256
9	-----	-----	-----	-.831	-----	-----	-----
10	.416	.324	.409	-.913	-.400	-----	.264
11	.392	.324	-----	-.908	-.546	.387	.210
12	.568	.315	.273	-.913	-.608	.295	-----
13	.198	.128	.172	-.425	-----	-----	.356
14	.084	-----	-----	-.417	-.199	.319	.087
15	.001	.153	.222	-.415	-.132	-----	.061
16	-.026	.136	.218	-----	-.060	.273	-----
17	.000	.084	.081	-.337	.008	.138	.034
18	-----	.039	-----	-----	-----	-----	-----
19	-----	.039	-----	-.130	-----	-----	.056
20	-----	-----	-----	-.045	-----	-.051	-.051
21	-----	-----	-----	-.028	-----	-----	-----

Integrated section aerodynamic characteristics						
c_n	0.287	0.307	0.336	0.354	0.343	0.230
$c_{m_{c/4}}$	-0.015	-0.016	-0.031	-0.045	-0.029	-0.009

Integrated panel aerodynamic characteristics	
$C_N' = 0.315$	
$C_B' = 0.139$	y'_{cp} (percent $b'/2$) = 44.3
$C_M' = -0.024$	x_{cp} (percent c') = 32.8

*Resultant pressure coefficient.

TABLE 3

TABULATION OF PRESSURE COEFFICIENTS AND AERODYNAMIC CHARACTERISTICS

OF THE X-1 WING; PUSH-OVER AT $M \approx 0.83$ - Continued

(c) $M = 0.826$; $C_{N_A} = 0.160$; $\delta_{a_L} = 0.82^{\circ}$ down

Orifice	Pressure coefficients						
	Station A*	Station B*	Station C*	Station D		Station E*	Station F*
				Upper	Lower		
1	-----	-----	-----	1.154	-----	-----	-----
2	0.174	0.171	0.157	.132	0.214	0.490	0.239
3	.227	.222	.024	-.067	.103	.299	.125
4	.232	.256	.307	-.329	-----	.232	-----
5	-----	.222	.333	-----	-.090	.254	.282
6	.208	.239	.239	-.458	-.276	.202	.210
7	-----	.347	.277	-.631	-.404	-----	.213
8	.154	.248	.203	-.704	-----	.299	.142
9	-----	-----	-----	-.757	-----	-----	-----
10	.270	.142	.265	-.853	-.494	-----	.196
11	.284	.181	-----	-.846	-.592	.254	.147
12	.362	.231	.294	-.901	-.633	.282	-----
13	.166	.239	.410	-.552	-----	-----	.364
14	.051	-----	-----	-.394	-.184	.319	.080
15	-.026	.106	.162	-.341	-.119	-----	.055
16	-.048	.048	.114	-----	-.050	.219	-----
17	-.001	-.051	.068	-.202	.026	.073	.024
18	-----	-0.096	-----	-----	-----	-----	-----
19	-----	-.034	-----	.026	-----	-----	.053
20	-----	-----	-----	.098	-----	-.038	-.061
21	-----	-----	-----	.103	-----	-----	-----

Integrated section aerodynamic characteristics						
c_n	0.141	0.148	0.196	0.212	0.202	0.146
$c_{m_{c/4}}$	-0.013	-0.008	-0.029	-0.033	-0.028	-0.014

Integrated panel aerodynamic characteristics	
$C_N' = 0.176$ $C_B' = 0.082$ $C_M' = -0.021$	y'_{cp} (percent $b'/2$) = 46.8 x_{cp} (percent c') = 36.8

*Resultant pressure coefficient.

TABLE 3

TABULATION OF PRESSURE COEFFICIENTS AND AERODYNAMIC CHARACTERISTICS

OF THE X-1 WING; PUSH-OVER AT $M \approx 0.83$ - Continued

(d) $M = 0.821$; $C_{N_A} = -0.015$; $\delta_{a_L} = 0.65^\circ$ down

Orifice	Pressure coefficients						
	Station A*	Station B*	Station C*	Station D		Station E*	Station F*
				Upper	Lower		
1	------	-------	------	1.163	------	--------	------
2	-0.706	-0.563	-0.527	.294	-0.165	**-0.111	-0.718
3	-.418	-.328	------	.163	-.208	-.325	-.388
4	-.276	**-.142	-.195	-.078	------	-.181	-.085
5	------	**-.155	-.041	-----	-.223	-.117	------
6	-.052	-.073	-.064	-.336	-.431	-.100	-.038
7	------	.074	.028	-.500	-.558	--------	.073
8	.000	-.002	-.086	-.605	------	.081	.000
9	------	-------	------	-.640	------	--------	------
10	.074	-.052	-.001	-.726	-.624	--------	.093
11	.059	-.054	------	-.798	-.742	.072	.090
12	-.033	-.017	.150	-.838	-.716	.121	------
13	-.001	.095	.397	-.819	------	--------	.302
14	.021	-------	------	-.401	-.170	.243	.059
15	-.038	.001	.017	-.177	-.092	--------	.047
16	-.060	-.052	-.014	-----	-.027	.057	------
17	-.098	-.112	-.001	-.009	.048	.022	.021
18	------	-.097	------	-----	------	--------	------
19	------	-.026	------	.127	------	--------	.043
20	------	-------	------	.189	------	-.014	-.021
21	------	-------	------	.189	------	--------	------

Integrated section aerodynamic characteristics						
c_n	-0.049	-0.040	0.001	0.023	0.017	0.018
$c_{m_{c/4}}$	-0.003	-0.001	-0.021	-0.028	-0.022	-0.023

Integrated panel aerodynamic characteristics	
$C_N' = -0.006$	
$C_B' = 0.003$	y'_{cp} (percent $b'/2$) = -49.2
$C_M' = -0.014$	x_{cp} (percent c') = -193.5

*Resultant pressure coefficient.
**Estimated value.

TABLE 3

TABULATION OF PRESSURE COEFFICIENTS AND AERODYNAMIC CHARACTERISTICS

OF THE X-1 WING; PUSH-OVER AT $M \approx 0.83$ - Continued

(e) $M = 0.820$; $C_{N_A} = -0.114$; $\delta_{a_L} = 0.20^\circ$ down

Orifice	Pressure coefficients						
	Station A*	Station B*	Station C*	Station D		Station E*	Station F*
				Upper	Lower		
1	------	------	------	1.157	------	------	------
2	-1.108	-0.929	-0.859	.485	-0.353	------	-0.661
3	-.824	-.591	------	.246	-.404	-0.598	-.580
4	-.550	**-.373	-.409	.027	-----	-.405	------
5	------	**-.374	-.180	-----	-.294	-.295	-.295
6	-.198	-.204	-.189	-.272	-.492	-.223	-.108
7	-----	-.029	-.082	-.449	-.624	------	-.033
8	-.120	-.198	-.309	-.556	-----	-.064	-.057
9	------	------	------	-.573	-----	------	------
10	-.082	-.180	-.100	-.636	-.729	------	.043
11	-.060	-.146	------	-.667	-.808	-.001	.089
12	-.146	-.120	-.026	-.762	-.767	.001	------
13	-.055	-.155	.289	-.782	-----	------	.151
14	.000	------	------	-.276	-.193	.113	.034
15	-.038	-.001	-.022	-.145	-.104	------	.040
16	-.060	-.052	-.034	-----	-.035	.036	------
17	-.098	-.103	-.017	-.013	.047	.022	.024
18	------	-.096	------	-----	-----	------	------
19	------	-.026	------	.133	-----	------	.017
20	------	------	------	.176	-----	-.014	.001
21	------	------	------	.171	-----	------	------

Integrated section aerodynamic characteristics						
c_n	-0.153	-0.163	-0.101	-0.077	-0.079	-0.041
$c_{m_{c/4}}$	0.002	0.009	-0.016	-0.023	-0.017	-0.022

Integrated panel aerodynamic characteristics	
$C_N' = -0.108$	
$C_B' = -0.038$	y'_{cp} (percent $b'/2$) = 35.4
$C_M' = -0.010$	x_{cp} (percent c') = 16.1

*Resultant pressure coefficient.
**Estimated value.

TABLE 3

TABULATION OF PRESSURE COEFFICIENTS AND AERODYNAMIC CHARACTERISTICS

OF THE X-1 WING; PUSH-OVER AT $M \approx 0.83$ - Continued

(f) $M = 0.829$; $C_{N_A} = -0.004$; $\delta_{a_L} = 0.20^\circ$ down

Orifice	Pressure coefficients						
	Station A*	Station B*	Station C*	Station D		Station E*	Station F*
				Upper	Lower		
1	------	-------	------	1.166	------	-------	------
2	-0.664	-0.525	-0.517	.394	-0.129	**-0.149	-0.390
3	-.377	-.295	------	.154	-.198	-.287	-.502
4	-.246	**-.180	-.185	-.075	------	-.210	------
5	------	**-.141	-.030	-----	-.223	-.112	-.102
6	-.046	-.069	-.049	-.326	-.420	-.110	-.061
7	------	.074	.036	-.479	-.548	-------	.054
8	.000	-.001	-.074	-.598	------	.021	.000
9	------	-------	------	-.630	------	-------	------
10	.082	-.049	.000	-.721	-.638	-------	.088
11	.075	-.064	------	-.734	-.723	.049	.066
12	-.023	-.028	.049	-.831	-.726	.095	------
13	-.021	.128	.152	-.839	------	-------	.333
14	.001	-------	------	-.466	-.172	.257	.044
15	-.036	.000	.049	-.195	-.088	-------	.038
16	-.057	-.049	.001	-----	-.024	.074	------
17	-.107	-.107	-.001	-.018	.056	.001	-.002
18	------	-.102	------	-----	------	-------	------
19	------	-.025	------	.144	------	-------	.030
20	------	-------	------	.195	------	-.020	-.020
21	------	-------	------	.190	------	-------	------

Integrated section aerodynamic characteristics						
c_n	-0.053	-0.044	-0.015	0.021	0.005	0.013
$c_{m_{c/4}}$	0.002	0.002	-0.013	-0.029	-0.019	-0.021

Integrated panel aerodynamic characteristics	
$C_N' = -0.016$ $C_B' = 0.003$ $C_M' = -0.011$	y'_{cp} (percent $b'/2$) = -17.4 x_{cp} (percent c') = -44.6

*Resultant pressure coefficient.
**Estimated value.

TABLE 3

TABULATION OF PRESSURE COEFFICIENTS AND AERODYNAMIC CHARACTERISTICS

OF THE X-1 WING; PUSH-OVER AT $M \approx 0.83$ - Continued

(g) $M = 0.837$; $C_{N_A} = 0.059$; $\delta_{a_L} = 0.20^{\circ}$ down

Orifice	Pressure coefficients						
	Station A*	Station B*	Station C*	Station D		Station E*	Station F*
				Upper	Lower		
1	------	------	------	1.176	-----	-----	------
2	-0.307	-0.197	-0.232	.315	0.045	0.070	-0.151
3	-.095	-.060	-.087	.077	-.044	-.080	-.239
4	-.064	.011	.001	-.136	-----	-.054	------
5	------	.043	.130	-----	-.138	.019	.022
6	.098	.059	.080	-.353	-.345	-.016	.001
7	------	.229	.130	-.499	-.564	-----	.100
8	.083	.127	.051	-.601	-----	.191	.032
9	------	------	------	-.642	-----	-----	------
10	.183	.037	.111	-.734	-.647	-----	.111
11	.172	.056	------	-.755	-.642	.118	.091
12	.223	.073	.159	-.846	-.652	.129	------
13	.121	.318	.181	-.876	-----	-----	.377
14	.052	------	------	-.529	-.152	.342	.065
15	-.021	.072	.151	-.281	-.071	-----	.043
16	-.045	.000	.107	-----	-.009	.169	------
17	-.084	-.081	.027	-.030	.069	.040	.021
18	------	-.108	------	-----	-----	-----	------
19	------	-.032	------	.155	-----	-----	.024
20	------	------	------	.204	-----	-.038	-.033
21	------	------	------	.188	-----	-----	------

Integrated section aerodynamic characteristics						
c_n	0.036	0.056	0.074	0.077	0.092	0.052
$c_{m_{c/4}}$	-0.003	-0.008	-0.016	-0.033	-0.028	-0.020

Integrated panel aerodynamic characteristics	
$C_N' = 0.066$	
$C_B' = 0.032$	y'_{cp} (percent $b'/2$) = 48.6
$C_M' = -0.017$	x_{cp} (percent c') = 50.7

*Resultant pressure coefficient.

TABLE 3

TABULATION OF PRESSURE COEFFICIENTS AND AERODYNAMIC CHARACTERISTICS

OF THE X-1 WING; PUSH-OVER AT $M \approx 0.83$ - Concluded

(h) $M = 0.840$; $C_{N_A} = 0.161$; $\delta_{a_L} = 0.20^\circ$ down

Orifice	Pressure coefficients						
	Station A*	Station B*	Station C*	Station D		Station E*	Station F*
				Upper	Lower		
1	-----	-----	-----	1.174	-----	-----	-----
2	0.176	0.058	0.157	.200	0.225	0.381	0.120
3	.220	.214	.148	-.024	.113	.204	-.033
4	.241	.252	.268	-.216	-----	.157	-----
5	-----	.206	.338	-----	-.058	.186	.173
6	.198	.201	.208	-.400	-.247	.132	.069
7	-----	.323	.271	-.554	-.387	-----	.165
8	.165	.236	.168	-.648	-----	.225	.094
9	-----	-----	-----	-.680	-----	-----	-----
10	.271	.115	.212	-.766	-.497	-----	.160
11	.242	.173	-----	-.787	-.614	.179	.110
12	.330	.205	.263	-.873	-.601	.194	-----
13	.212	.206	.299	-.803	-----	-----	.375
14	.102	-----	-----	-.365	-.142	.332	.086
15	-.001	.142	.189	-.308	-.082	-----	.047
16	-.044	.016	.142	-----	-.019	.236	-----
17	-.079	.001	.116	-.176	.052	.088	.009
18	-----	-.049	-----	-----	-----	-----	-----
19	-----	-.024	-----	.056	-----	-----	.036
20	-----	-----	-----	.146	-----	-.047	-.057
21	-----	-----	-----	.126	-----	-----	-----

Integrated section aerodynamic characteristics						
c_n	0.126	0.139	0.183	0.197	0.164	0.097
$c_{m_{c/4}}$	-0.004	-0.011	-0.026	-0.043	-0.028	-0.017

Integrated panel aerodynamic characteristics	
$C_N' = 0.154$	
$C_B' = 0.070$	y'_{cp} (percent $b'/2$) = 45.2
$C_M' = -0.021$	x_{cp} (percent c') = 38.6

*Resultant pressure coefficient.

TABLE 4

TABULATION OF PRESSURE COEFFICIENTS AND AERODYNAMIC CHARACTERISTICS

OF THE X-1 WING; PUSH-OVER AT $M \approx 0.99$

(a) $M = 1.087$; $C_{N_A} = 1.128$; $\delta_{a_L} = 0.90^\circ$ down

Orifice	Pressure coefficients						
	Station A*	Station B*	Station C*	Station D		Station E*	Station F*
				Upper	Lower		
1	-------	-------	-------	0.550	-------	-------	-------
2	**2.485	**2.262	**2.361	-.854	1.281	**2.141	1.954
3	**2.145	**2.082	2.130	-.858	1.196	**2.026	**1.798
4	**2.026	1.994	1.946	-.804	-------	**1.941	-------
5	-------	1.810	1.795	-------	**.874	1.745	1.483
6	**1.563	1.651	1.563	-.818	.574	1.440	1.184
7	-------	**1.436	1.410	-.799	.547	-------	**1.010
8	1.428	1.393	1.364	-.823	-------	1.273	.904
9	-------	-------	-------	-.846	-------	-------	-------
10	1.349	1.284	1.273	-.897	.362	-------	.759
11	1.259	1.251	-------	-.885	.268	1.101	.697
12	**1.190	**1.172	**1.204	-.933	.217	1.066	-------
13	**1.096	**1.142	**1.136	-.914	-------	-------	.686
14	**1.037	-------	-------	-.936	.177	1.064	.700
15	.957	1.013	**1.190	-.941	.175	-------	.702
16	.936	1.000	1.179	-------	.199	1.133	-------
17	.874	**1.064	**1.282	**-1.059	.196	1.082	.737
18	-------	.611	-------	-------	-------	-------	-------
19	-------	.734	-------	**-.893	-------	-------	.550
20	-------	-------	-------	-.772	-------	.542	.445
21	-------	-------	-------	-.734	-------	-------	-------

Integrated section aerodynamic characteristics						
c_n	1.232	1.246	1.358	1.261	1.186	0.885
$c_{m_{c/4}}$	-0.181	-0.189	-0.262	-0.240	-0.196	-0.123

Integrated panel aerodynamic characteristics	
$C_N' = 1.209$ $C_B' = 0.518$ $C_M' = -0.203$	y'_{cp} (percent $b'/2$) = 42.8 x_{cp} (percent c') = 41.8

*Resultant pressure coefficient
**Estimated value.

TABLE 4

TABULATION OF PRESSURE COEFFICIENTS AND AERODYNAMIC CHARACTERISTICS

OF THE X-1 WING; PUSH-OVER AT $M \approx 0.99$ - Continued

(b) $M = 1.054$; $C_{N_A} = 0.984$; $\delta_{a_L} = 0.75^\circ$ down

Orifice	Pressure coefficients						
	Station A*	Station B*	Station C*	Station D		Station E*	Station F*
				Upper	Lower		
1	-------	-------	-------	0.711	-----	-------	-------
2	**2.388	2.197	**2.105	-.862	1.199	2.068	1.825
3	**2.175	**2.033	1.953	-.786	1.088	1.977	1.704
4	**2.039	1.853	1.783	-.805	-----	1.791	-----
5	-------	1.670	1.621	-------	.747	1.604	1.373
6	**1.518	1.498	1.441	-.822	.481	1.334	1.095
7	-------	**1.325	1.298	-.804	.406	-----	.868
8	1.235	1.257	1.216	-.875	-----	1.170	.774
9	-------	-------	-------	-.868	-----	-----	-----
10	1.131	1.131	1.151	-.918	.198	-----	.640
11	1.015	1.097	-------	-.896	.140	1.012	.600
12	.998	1.054	1.058	-.950	.083	.998	-----
13	.976	**1.082	1.006	-.935	-----	-----	.588
14	.964	-------	-------	-.976	-.004	.981	.582
15	.899	1.095	.993	-.983	.031	-----	.592
16	.853	1.114	1.005	-------	.042	1.013	-----
17	.785	**1.121	1.151	**-1.068	.078	1.032	.606
18	-------	.723	-------	-------	-----	-----	-----
19	-------	.614	-------	-.933	-----	-----	.462
20	-------	-------	-------	-.856	-----	.472	.367
21	-------	-------	-------	-.756	-----	-----	-----

Integrated section aerodynamic characteristics						
c_n	1.129	1.160	1.203	1.152	1.090	0.776
$c_{m_{c/4}}$	-0.155	-0.181	-0.232	-0.216	-0.178	-0.098

Integrated panel aerodynamic characteristics	
$C_N' = 1.101$ $C_B' = 0.475$ $C_M' = -0.184$	y'_{cp} (percent $b'/2$) = 43.1 x_{cp} (percent c') = 41.7

*Resultant pressure coefficient.
**Estimated value.

TABLE 4

TABULATION OF PRESSURE COEFFICIENTS AND AERODYNAMIC CHARACTERISTICS

OF THE X-1 WING; PUSH-OVER AT $M \approx 0.99$ - Continued

(c) $M = 1.025$; $C_{N_A} = 0.876$; $\delta_{a_L} = 0.65^\circ$ down

Orifice	Pressure coefficients						
	Station A*	Station B*	Station C*	Station D		Station E*	Station F*
				Upper	Lower		
1	-------	-------	-----	0.818	-----	-----	-----
2	2.155	1.977	1.908	-.731	1.122	1.895	1.690
3	2.106	1.919	1.771	-.679	1.013	1.771	1.544
4	1.980	1.695	1.592	-.700	-----	1.590	-----
5	-----	1.513	1.461	--------	.646	1.417	1.232
6	1.377	1.337	1.263	-.768	.457	1.208	.928
7	-----	1.217	1.166	-.785	.295	-----	.734
8	1.050	1.134	1.070	-.810	-----	1.066	1.654
9	-----	-------	-----	-.840	-----	-----	-----
10	.992	1.017	1.003	-.884	.122	-----	.541
11	.890	.990	-----	-.877	.026	.870	.485
12	.872	.945	.936	-.931	-.039	.852	-----
13	.861	.957	.885	-.944	-----	-----	.445
14	.881	-------	-----	-.949	-.154	.870	.436
15	.825	.990	.854	-.969	-.154	-----	.440
16	.790	1.008	.827	--------	-.126	.859	-----
17	.741	**1.110	1.017	**-1.062	-.086	.872	.429
18	-----	.636	-----	--------	-----	-----	-----
19	-----	.632	-----	-.937	-----	-----	.345
20	-----	-------	-----	-.877	-----	.369	.260
21	-----	-------	-----	-.782	-----	-----	-----

Integrated section aerodynamic characteristics						
c_n	1.010	1.067	1.074	1.016	0.959	0.650
$c_{m_{c/4}}$	-0.130	-0.173	-0.206	-0.184	-0.150	-0.066

Integrated panel aerodynamic characteristics	
$C_N' = 0.982$	
$C_B' = 0.415$	y'_{cp} (percent $b'/2$) = 42.2
$C_M' = -0.160$	x_{cp} (percent c') = 41.3

*Resultant pressure coefficient.
**Estimated value.

TABLE 4

TABULATION OF PRESSURE COEFFICIENTS AND AERODYNAMIC CHARACTERISTICS

OF THE X-1 WING; PUSH-OVER AT $M \approx 0.99$ - Continued

(d) $M = 1.007$; $C_{N_A} = 0.780$; $\delta_{a_L} = 0.55^\circ$ down

Orifice	Pressure coefficients						
	Station A*	Station B*	Station C*	Station D		Station E*	Station F*
				Upper	Lower		
1	-----	-----	-----	0.906	-----	-----	-----
2	2.037	1.842	1.761	-.633	1.074	1.738	1.532
3	1.976	1.747	1.627	-.607	.941	1.637	1.418
4	1.840	1.536	1.448	-.610	-----	1.469	-----
5	-----	1.368	1.332	--------	.571	1.273	1.123
6	1.218	1.190	1.142	-.723	.396	1.066	.803
7	-----	1.108	1.058	-.740	.221	-----	.657
8	.925	1.028	.967	-.788	-----	.961	.571
9	-----	-----	-----	-.824	-----	-----	-----
10	.801	.910	.923	-.881	.056	-----	.495
11	.801	.893	-----	-.850	-.059	.769	.405
12	.771	.847	.826	-.921	-.114	.767	-----
13	.767	.872	.786	-.930	-----	-----	.394
14	.811	-----	-----	-.957	-.228	.771	.364
15	.746	.862	.748	-.974	-.238	-----	.337
16	.738	.872	.719	--------	-.224	.776	-----
17	.691	.965	.933	**-1.003	-.190	.769	.329
18	-----	.482	-----	--------	-----	-----	-----
19	-----	.552	-----	-.918	-----	-----	.268
20	-----	-----	-----	-.866	-----	.297	.186
21	-----	-----	-----	-.822	-----	-----	-----

Integrated section aerodynamic characteristics						
c_n	0.893	0.958	0.974	0.909	0.858	0.558
$c_{m_{c/4}}$	-0.113	-0.152	-0.186	-0.162	-0.130	-0.050

Integrated panel aerodynamic characteristics	
$C_N' = 0.879$	
$C_B' = 0.370$	y'_{cp} (percent $b'/2$) = 42.1
$C_M' = -0.139$	x_{cp} (percent c') = 40.8

*Resultant pressure coefficient.
**Estimated value.

TABLE 4

TABULATION OF PRESSURE COEFFICIENTS AND AERODYNAMIC CHARACTERISTICS

OF THE X-1 WING; PUSH-OVER AT $M \approx 0.99$ - Continued

(e) $M = 0.995$; $C_{N_A} = 0.666$; $\delta_{a_L} = 0.35^{\circ}$ down

Orifice	Pressure coefficients						
	Station A*	Station B*	Station C*	Station D		Station E*	Station F*
				Upper	Lower		
1	-----	-----	-----	0.984	-----	-----	-----
2	1.786	1.606	1.553	-.465	0.960	1.557	1.344
3	1.754	1.512	1.423	-.390	.846	1.458	1.228
4	1.620	1.313	1.261	-.453	-----	1.261	-----
5	-----	1.186	1.139	-----	.481	1.084	.962
6	1.021	1.025	.956	-.662	.319	.889	.664
7	-----	.966	.887	-.684	.140	-----	.552
8	.749	.893	.798	-.747	-----	.824	.473
9	-----	-----	-----	-.761	-----	-----	-----
10	.747	.725	.769	-.814	-.016	-----	.398
11	.680	.739	-----	-.808	-.132	.642	.335
12	.637	.735	.706	-.863	-.207	.650	-----
13	.591	.759	.674	-.902	-----	-----	.325
14	.704	-----	-----	-.904	-.303	.660	.264
15	.605	.686	.641	-.944	-.337	-----	.254
16	.664	.613	.617	-----	-.317	.668	-----
17	.601	.706	.792	-.977	-.282	.664	.229
18	-----	.424	-----	-----	-----	-----	-----
19	-----	.463	-----	-.897	-----	-----	.183
20	-----	-----	-----	-.837	-----	.227	.124
21	-----	-----	-----	-.831	-----	-----	-----

Integrated section aerodynamic characteristics						
c_n	0.771	0.795	0.818	0.785	0.721	0.450
$c_{m_{c/4}}$	-0.099	-0.117	-0.155	-0.143	-0.106	-0.033

Integrated panel aerodynamic characteristics	
$C_N' = 0.740$	
$C_B' = 0.312$	y'_{cp} (percent $b'/2$) = 42.1
$C_M' = -0.116$	x_{cp} (percent c') = 40.7

*Resultant pressure coefficient.

TABLE 4

TABULATION OF PRESSURE COEFFICIENTS AND AERODYNAMIC CHARACTERISTICS

OF THE X-1 WING; PUSH-OVER AT $M \approx 0.99$ - Continued

(f) $M = 0.985$; $C_{N_A} = 0.592$; $\delta_{a_L} = 0$.

Orifice	Pressure coefficients						
	Station A*	Station B*	Station C*	Station D		Station E*	Station F*
				Upper	Lower		
1	-----	-----	-----	1.062	-----	-----	-----
2	1.693	1.482	1.417	-.325	0.914	1.490	1.250
3	1.640	1.360	1.305	-.177	.798	1.368	1.100
4	1.478	1.198	1.127	-.416	-----	1.186	-----
5	-----	1.078	1.056	-----	.436	.974	.873
6	.903	.934	.899	-.629	.242	.810	.611
7	-----	.883	.800	-.668	.081	-----	.503
8	.670	.800	.741	-.717	-----	.761	.408
9	-----	-----	-----	-.729	-----	-----	-----
10	.668	.660	.706	-.810	-.055	-----	.357
11	.621	.666	-----	-.802	-.162	.599	.310
12	.670	.660	.644	-.848	-.233	.595	-----
13	.503	.648	.623	-.891	-----	-----	.274
14	.629	-----	-----	-.936	-.355	.593	.242
15	.491	.585	.587	-.932	-.386	-----	.223
16	.619	.564	.558	-----	-.365	.609	-----
17	.558	.646	.745	-.964	-.335	.619	.179
18	-----	.416	-----	-----	-----	-----	-----
19	-----	.430	-----	-.893	-----	-----	.142
20	-----	-----	-----	-.818	-----	.191	.091
21	-----	-----	-----	-.806	-----	-----	-----

Integrated section aerodynamic characteristics						
c_n	0.701	0.718	0.759	0.714	0.668	0.401
$c_{m_{c/4}}$	-0.086	-0.105	-0.143	-0.132	-0.099	-0.025

Integrated panel aerodynamic characteristics	
$C_N' = 0.676$ $C_B' = 0.284$ $C_M' = -0.106$	y'_{cp} (percent b/2) = 42.1 x_{cp} (percent c') = 40.6

*Resultant pressure coefficient.

TABLE 4

TABULATION OF PRESSURE COEFFICIENTS AND AERODYNAMIC CHARACTERISTICS

OF THE X-1 WING; PUSH-OVER AT $M \approx 0.99$ - Continued

(g) $M = 0.984$; $C_{N_A} = 0.484$; $\delta_{a_L} = 0.52^\circ$ up

Orifice	Pressure coefficients						
	Station A*	Station B*	Station C*	Station D		Station E*	Station F*
				Upper	Lower		
1	-----	-----	-----	1.113	-----	-----	-----
2	1.429	1.236	1.208	-.034	0.830	1.321	1.074
3	1.411	1.119	1.064	-.140	.688	1.171	.900
4	1.222	.974	.924	-.347	-----	.978	-----
5	-----	.914	.887	-----	.374	.791	.719
6	.713	.774	.704	-.540	.191	.674	.503
7	-----	.723	.682	-.579	.025	-----	.417
8	.534	.667	.604	-.655	-----	.637	.355
9	-----	-----	-----	-.676	-----	-----	-----
10	.536	.540	.589	-.725	-.105	-----	.327
11	.511	.509	-----	-.731	-.207	.503	.267
12	.476	.489	.550	-.803	-.275	.524	-----
13	.403	.499	.518	-.848	-----	-----	.259
14	.522	-----	-----	-.840	-.392	.503	.191
15	.376	.513	.476	-.871	-.419	-----	.193
16	.456	.483	.464	-----	-.413	.497	-----
17	.483	.569	.635	-.926	-.382	.485	.170
18	-----	.195	-----	-----	-----	-----	-----
19	-----	.255	-----	-.836	-----	-----	.090
20	-----	-----	-----	-.768	-----	.193	.049
21	-----	-----	-----	-.791	-----	-----	-----

Integrated section aerodynamic characteristics						
c_n	0.552	0.575	0.634	0.586	0.556	0.348
$c_{m_{c/4}}$	-0.066	-0.076	-0.122	-0.106	-0.082	-0.023

Integrated panel aerodynamic characteristics	
$C_N' = 0.556$ $C_B' = 0.236$ $C_M' = -0.084$	y'_{cp} (percent $b'/2$) = 42.4 x_{cp} (percent c') = 40.2

*Resultant pressure coefficient

TABLE 4

TABULATION OF PRESSURE COEFFICIENTS AND AERODYNAMIC CHARACTERISTICS

OF THE X-1 WING; PUSH-OVER AT $M \approx 0.99$ - Continued

(h) $M = 0.981$; $C_{N_A} = 0.428$; $\delta_{a_L} = 1.05^\circ$ up

Orifice	Pressure coefficients						
	Station A*	Station B*	Station C*	Station D		Station E*	Station F*
				Upper	Lower		
1	-----	-----	-----	1.138	-----	-----	-----
2	1.264	1.058	1.070	.026	0.773	1.278	0.947
3	1.249	.999	.926	-.101	.630	1.062	.750
4	1.062	.879	.800	-.326	-----	.854	-----
5	-----	.806	.770	-----	.338	.662	.612
6	.587	.697	.631	-.484	.140	.587	.427
7	-----	.635	.625	-.526	-.016	-----	.379
8	.458	.589	.510	-.598	-----	.548	.325
9	-----	-----	-----	-.630	-----	-----	-----
10	.468	.437	.527	-.698	-.130	-----	.273
11	.452	.408	-----	-.692	-.224	.443	.233
12	.429	.406	.496	-.761	-.303	.458	-----
13	.354	.437	.464	-.796	-----	-----	.233
14	.452	-----	-----	-.798	-.422	.448	.171
15	.325	.468	.435	-.848	-.453	-----	.177
16	.385	.441	.404	-----	-.449	.423	-----
17	.433	.504	.573	-.886	-.411	.429	.135
18	-----	.142	-----	-----	-----	-----	-----
19	-----	.198	-----	-.790	-----	-----	.064
20	-----	-----	-----	-.719	-----	.185	.001
21	-----	-----	-----	-.771	-----	-----	-----

Integrated section aerodynamic characteristics						
c_n	0.482	0.503	0.553	0.513	0.486	0.292
$c_{m_{c/4}}$	-0.060	-0.065	-0.105	-0.088	-0.074	-0.017

Integrated panel aerodynamic characteristics	
$C_N' = 0.484$ $C_B' = 0.205$ $C_M' = -0.072$	y'_{cp} (percent $b'/2$) = 42.4 x_{cp} (percent c') = 39.9

*Resultant pressure coefficient.

TABLE 4

TABULATION OF PRESSURE COEFFICIENTS AND AERODYNAMIC CHARACTERISTICS

OF THE X-1 WING; PUSH-OVER AT $M \approx 0.99$ - Continued

(i) $M = 0.980$; $C_{N_A} = 0.353$; $\delta_{a_L} = 1.25^{\circ}$ up

Orifice	Pressure coefficients						
	Station A*	Station B*	Station C*	Station D		Station E*	Station F*
				Upper	Lower		
1	-----	-----	-----	1.181	-----	-----	-----
2	1.015	0.849	0.788	.094	0.682	1.059	0.813
3	1.024	.800	.725	-.045	.568	.859	.600
4	.811	.703	.621	-.245	-----	.663	-----
5	-----	.674	.666	-----	.288	.527	.453
6	.417	.558	.539	-.441	.105	.505	.373
7	-----	.554	.522	-.476	-.049	-----	.345
8	.369	.470	.425	-.559	-----	.474	.278
9	-----	-----	-----	-.582	-----	-----	-----
10	.322	.329	.444	-.651	-.188	-----	.257
11	.377	.335	-----	-.649	-.266	.390	.196
12	.358	.322	.421	-.712	-.329	.388	-----
13	.301	.390	.396	-.754	-----	-----	.211
14	.388	-----	-----	-.763	-.432	.385	.154
15	.270	.406	.354	-.822	-.478	-----	.133
16	.312	.369	.320	-----	-.470	.364	-----
17	.381	.434	.491	-.864	-.447	.381	.114
18	-----	.101	-----	-----	-----	-----	-----
19	-----	.141	-----	-.748	-----	-----	.027
20	-----	-----	-----	-.687	-----	.143	.040
21	-----	-----	-----	-.744	-----	-----	-----

Integrated section aerodynamic characteristics						
c_n	0.374	0.410	0.472	0.445	0.416	0.241
$c_{m_{c/4}}$	-0.052	-0.053	-0.093	-0.081	-0.066	-0.017

Integrated panel aerodynamic characteristics	
$C_N' = 0.404$ $C_B' = 0.174$ $C_M' = -0.064$	y'_{cp} (percent $b'/2$) = 43.9 x_{cp} (percent c') = 40.7

*Resultant pressure coefficient.

TABLE 4

TABULATION OF PRESSURE COEFFICIENTS AND AERODYNAMIC CHARACTERISTICS

OF THE X-1 WING; PUSH-OVER AT $M \approx 0.99$ - Continued

(j) $M = 0.978$; $C_{N_A} = 0.303$; $\delta_{a_L} = 1.25^\circ$ up

Orifice	Pressure coefficients						
	Station A*	Station B*	Station C*	Station D		Station E*	Station F*
				Upper	Lower		
1	-----	-----	-----	1.206	-----	-----	-----
2	0.870	0.732	0.666	.143	0.642	0.988	0.696
3	.891	.679	.710	-.010	.510	.774	.520
4	.679	.626	.547	-.158	-----	.549	-----
5	-----	.604	.624	-----	.256	.505	.371
6	.369	.494	.477	-.381	.054	.450	.339
7	-----	.505	.469	-.465	-.080	-----	.327
8	.331	.386	.382	-.572	-----	.448	.265
9	-----	-----	-----	-.586	-----	-----	-----
10	.333	.293	.420	-.639	-.211	-----	.244
11	.333	.295	-----	-.635	-.294	.361	.182
12	.329	.286	.378	-.699	-.355	.365	-----
13	.261	.350	.356	-.748	-----	-----	.199
14	.365	-----	-----	-.754	-.472	.367	.134
15	.240	.378	.312	-.818	-.497	-----	.136
16	.280	.333	.271	-----	-.487	.339	-----
17	.324	.403	.426	-.854	-.459	.363	.089
18	-----	.062	-----	-----	-----	-----	-----
19	-----	.102	-----	-.741	-----	-----	.004
20	-----	-----	-----	-.678	-----	.119	-.070
21	-----	-----	-----	-.735	-----	-----	-----

Integrated section aerodynamic characteristics						
c_n	0.328	0.361	0.413	0.386	0.383	0.213
$c_{m_{c/4}}$	-0.044	-0.047	-0.075	-0.075	-0.060	-0.010

Integrated panel aerodynamic characteristics	
$C_N' = 0.358$	
$C_B' = 0.154$	y'_{cp} (percent $b'/2$) = 43.1
$C_M' = -0.057$	x_{cp} (percent c') = 40.9

*Resultant pressure coefficient.

TABLE 4

TABULATION OF PRESSURE COEFFICIENTS AND AERODYNAMIC CHARACTERISTICS

OF THE X-1 WING; PUSH-OVER AT $M \approx 0.99$ - Continued

(k) $M = 0.977$; $C_{N_A} = 0.207$; $\delta_{a_L} = 1.25^\circ$ up

Orifice	Pressure coefficients						
	Station A*	Station B*	Station C*	Station D		Station E*	Station F*
				Upper	Lower		
1	-----	-----	-----	1.248	-----	-----	-----
2	0.494	0.428	0.374	.259	0.550	0.648	0.441
3	.503	.417	.321	.084	.405	.492	.278
4	.417	.411	.385	-.098	-----	.364	-----
5	-----	.452	.471	-----	.191	.372	.246
6	.235	.330	.385	-.293	-.002	.332	.250
7	-----	.332	.334	-.410	-.128	-----	.244
8	.235	.278	.267	-.505	-----	.332	.214
9	-----	-----	-----	-.509	-----	-----	-----
10	.246	.201	.300	-.577	-.285	-----	.210
11	.242	.208	-----	-.564	-.350	.267	.150
12	.244	.203	.263	-.644	-.389	.278	-----
13	.186	.267	.244	-.697	-----	-----	.171
14	.295	-----	-----	-.718	-.515	.280	.122
15	.178	.289	.227	-.783	-.532	-----	.107
16	.216	.250	.193	-----	-.530	.280	-----
17	.182	.312	.353	-.808	-.511	.295	.062
18	-----	-.001	-----	-----	-----	-----	-----
19	-----	.024	-----	-.686	-----	-----	-.026
20	-----	-----	-----	-.626	-----	.056	-.133
21	-----	-----	-----	-.699	-----	-----	-----

Integrated section aerodynamic characteristics						
c_n	0.217	0.254	0.301	0.277	0.279	0.153
$c_{m_{c/4}}$	-0.032	-0.032	-0.057	-0.055	-0.046	-0.007

Integrated panel aerodynamic characteristics	
$C_N' = 0.257$	
$C_B' = 0.112$	y'_{cp} (percent $b'/2$) = 43.7
$C_M' = -0.041$	x_{cp} (percent c') = 40.9

*Resultant pressure coefficient.

TABLE 4

TABULATION OF PRESSURE COEFFICIENTS AND AERODYNAMIC CHARACTERISTICS

OF THE X-1 WING; PUSH-OVER AT $M \approx 0.99$ - Continued

(l) $M = 0.979$; $C_{N_A} = 0.086$; $\delta_{a_L} = 1.25^{\circ}$ up

Orifice	Pressure coefficients						
	Station A*	Station B*	Station C*	Station D		Station E*	Station F*
				Upper	Lower		
1	-----	-----	-----	1.237	-----	-----	-----
2	0.001	0.002	0.002	.379	0.366	0.330	0.097
3	.108	.097	.056	.196	.271	.147	-.006
4	.121	.157	.162	-.026	-----	.164	-----
5	-----	.149	.274	-----	.166	.188	.112
6	.091	.151	.140	-.138	-.058	.162	.164
7	-----	.194	.168	-.300	-.207	-----	.136
8	.112	.155	.099	-.416	-----	.155	.118
9	-----	-----	-----	-.427	-----	-----	-----
10	.157	.093	.140	-.509	-.341	-----	.116
11	.168	.088	-----	-.537	-.412	.147	.086
12	.162	.103	.162	-.604	-.444	.162	-----
13	.108	.201	.151	-.667	-----	-----	.121
14	.216	-----	-----	-.677	-.572	.170	.106
15	.093	.183	.129	-.729	-.615	-----	.069
16	.114	.153	.103	-----	-.591	.190	-----
17	.065	.216	.237	-.746	-.572	.175	.037
18	-----	-.075	-----	-----	-----	-----	-----
19	-----	-.060	-----	-.656	-----	-----	-.043
20	-----	-----	-----	-.596	-----	-.002	-.110
21	-----	-----	-----	-.660	-----	-----	-----

Integrated section aerodynamic characteristics						
c_n	0.101	0.114	0.142	0.139	0.143	0.077
$c_{m_{c/4}}$	-0.020	-0.019	-0.031	-0.029	-0.025	-0.005

Integrated panel aerodynamic characteristics	
$C_N' = 0.124$	
$C_B' = 0.055$	y'_{cp} (percent $b'/2$) = 44.7
$C_M' = -0.022$	x_{cp} (percent c') = 43.1

*Resultant pressure coefficient.

TABLE 4

TABULATION OF PRESSURE COEFFICIENTS AND AERODYNAMIC CHARACTERISTICS

OF THE X-1 WING; PUSH-OVER AT $M \approx 0.99$ - Continued

(m) $M = 0.966$; $C_{N_A} = -0.006$; $\delta_{a_L} = 1.20^\circ$ up

Orifice	Pressure coefficients						
	Station A*	Station B*	Station C*	Station D		Station E*	Station F*
				Upper	Lower		
1	------	------	------	1.243	-----	-----	------
2	-0.493	-0.323	-0.269	.482	0.212	0.065	-0.132
3	-.247	-.161	------	.302	.176	-.099	-.182
4	-.157	-.063	-.031	.046	-----	-.054	------
5	------	-.029	.067	-----	.035	.001	-.045
6	.000	.001	.001	-.142	-.173	-.022	.101
7	------	.085	.067	-.292	-.296	-----	.067
8	-.001	.047	-.001	-.379	-----	.054	.045
9	------	------	------	-.395	-----	-----	------
10	.067	.000	.040	-.503	-.402	-----	.056
11	.090	-.009	------	-.507	-.462	.061	.034
12	.090	.034	.078	-.604	-.516	.092	.078
13	.045	.101	.074	-.655	-----	-----	------
14	.121	------	------	-.646	-.630	.108	.090
15	.022	.052	.049	-.709	-.653	-----	.072
16	.045	.101	.018	-----	-.657	.128	------
17	.000	.126	.143	-.742	-.637	.126	.038
18	------	-.139	------	-----	-----	-----	------
19	------	-.121	------	-.628	-----	-----	-.022
20	------	------	------	-.581	-----	-.067	-.078
21	------	------	------	-.653	-----	-----	------

Integrated section aerodynamic characteristics						
c_n	-0.004	0.004	0.039	0.044	0.043	0.026
$c_{m_{c/4}}$	-0.009	-0.002	-0.018	-0.016	-0.015	-0.008

Integrated panel aerodynamic characteristics	
$C_N' = 0.026$ $C_B' = 0.015$ $C_M' = -0.011$	y'_{cp} (percent $b'/2$) = 57.8 x_{cp} (percent c') = 69.2

*Resultant pressure coefficient.

TABLE 4

TABULATION OF PRESSURE COEFFICIENTS AND AERODYNAMIC CHARACTERISTICS

OF THE X-1 WING; PUSH-OVER AT $M \approx 0.99$ — Continued

(n) $M = 0.962$; $C_{N_A} = -0.094$; $\delta_{a_L} = 0.55^{\circ}$ down

Orifice	Pressure coefficients						
	Station A*	Station B*	Station C*	Station D Upper	Station D Lower	Station E*	Station F*
1	------	------	------	1.246	------	------	------
2	-0.917	-0.807	-0.722	.617	-0.046	**-0.298	-0.481
3	-.743	-.513	------	.423	-.150	-.458	-.399
4	-.435	------	-.355	.196	------	-.309	------
5	------	**-.248	-.138	------	-.047	-.314	-.151
6	-.046	-.199	-.160	-.069	-.212	-.156	-.069
7	------	-.069	-.066	-.234	-.358	------	-.023
8	-.138	-.158	-.160	-.338	------	-.085	.002
9	------	------	------	-.326	------	------	------
10	-.053	-.117	-.099	-.452	-.491	------	.030
11	-.032	-.099	------	-.448	-.555	-.041	-.001
12	-.032	-.096	-.001	-.528	-.580	-.030	------
13	-.073	.000	-.064	-.590	------	------	.069
14	.046	------	------	-.597	-.697	-.020	.064
15	-.057	.023	-.057	-.674	-.736	------	.073
16	-.034	.000	-.096	------	-.723	.034	------
17	-.092	.034	.041	-.675	-.707	.041	.039
18	------	-.229	------	------	------	------	------
19	------	-.213	------	-.649	------	------	.082
20	------	------	------	-.562	------	.000	.028
21	------	------	------	-.672	------	------	------

Integrated section aerodynamic characteristics						
c_n	-0.110	-0.125	-0.112	-0.108	-0.079	-0.014
$c_{m_{c/4}}$	0.004	0.010	0.002	0.010	-0.008	-0.020

Integrated panel aerodynamic characteristics	
$C_N' = -0.102$	
$C_B' = -0.038$	y'_{cp} (percent $b'/2$) = 37.9
$C_M' = 0.002$	x_{cp} (percent c') = 27.2

*Resultant pressure coefficient.
**Estimated value.

TABLE 4

TABULATION OF PRESSURE COEFFICIENTS AND AERODYNAMIC CHARACTERISTICS

OF THE X-1 WING; PUSH-OVER AT $M \approx 0.99$ - Continued

(o) $M = 0.949$; $C_{N_A} = -0.207$; $\delta_{a_L} = 0.35^\circ$ down

Orifice	Pressure coefficients						
	Station A*	Station B*	Station C*	Station D		Station E*	Station F*
				Upper	Lower		
1	------	------	------	1.214	------	------	------
2	-1.170	-0.999	-0.947	.674	-0.266	------	-0.714
3	-1.094	-.844	------	.481	-.351	-.709	-.578
4	-.809	------	-.664	.270	------	-.606	------
5	------	**-.404	-.338	------	-.263	-.476	-.442
6	-.333	-.357	-.293	-.047	-.247	-.285	-.150
7	------	-.202	-.162	-.197	-.423	------	-.093
8	-.238	-.250	-.276	-.301	------	-.171	-.078
9	------	------	------	-.332	------	------	------
10	-.131	-.233	-.202	-.442	-.582	------	-.036
11	-.128	-.202	------	-.427	-.637	-.138	-.040
12	-.124	-.138	-.155	-.530	-.611	-.105	------
13	-.143	-.088	-.145	-.577	------	------	.040
14	-.048	------	------	-.584	-.775	-.076	.043
15	-.114	-.036	-.143	-.660	-.806	------	.071
16	-.083	-.067	-.176	------	-.803	-.002	------
17	-.126	-.031	-.057	-.668	-.791	-.002	.040
18	------	-.312	------	------	------	------	------
19	------	-.290	------	-.649	------	------	.071
20	------	------	------	-.577	------	-.081	.002
21	------	------	------	-.694	------	------	------

Integrated section aerodynamic characteristics						
c_n	-0.236	-0.250	-0.226	-0.208	-0.183	-0.084
$c_{m_{c/4}}$	0.005	0.025	0.019	0.025	0.001	-0.022

Integrated panel aerodynamic characteristics	
$C_N' = -0.207$ $C_B' = -0.082$ $C_M' = 0.013$	y'_{cp} (percent $b'/2$) = 39.4 x_{cp} (percent c') = 31.3

*Resultant pressure coefficient.
**Estimated value.

TABLE 4

TABULATION OF PRESSURE COEFFICIENTS AND AERODYNAMIC CHARACTERISTICS

OF THE X-1 WING; PUSH-OVER AT $M \approx 0.99$ - Continued

(p) $M = 0.945$; $C_{N_A} = -0.231$; $\delta_{a_L} = 0.55^\circ$ down

Orifice	Pressure coefficients						
	Station A*	Station B*	Station C*	Station D		Station E*	Station F*
				Upper	Lower		
1	------	-------	------	1.194	------	-----	------
2	-1.239	-1.045	-1.013	.691	-0.318	-----	-0.789
3	-1.165	-.910	------	.503	-.395	-.734	-.626
4	-.890	-------	-.729	.298	------	-.674	------
5	------	**-.445	-.409	-----	-.310	-.549	-.501
6	-.400	-.392	-.354	-.031	-.306	-.337	-.217
7	-----	-.296	-.205	-.200	-.426	-----	-.108
8	-.274	-.306	-.318	-.296	------	-.236	-.079
9	------	-------	------	-.327	------	-----	------
10	-.152	-.253	-.233	-.419	-.606	-----	-.046
11	-.144	-.236	------	-.429	-.647	-.164	-.067
12	-.164	-.168	-.193	-.522	-.623	-.118	------
13	-.197	-.103	-.173	-.558	------	-----	.024
14	-.091	-------	------	-.566	-.794	-.103	.043
15	-.144	-.048	-.152	-.647	-.823	-----	.065
16	-.120	-.084	-.190	-----	-.835	-.041	------
17	-.144	-.048	-.065	-.678	-.826	-.034	.041
18	------	-.325	------	-----	------	-----	------
19	------	-.320	------	-.647	------	-----	.096
20	------	-------	------	-.575	------	-.082	.034
21	------	-------	------	-.655	------	-----	------

Integrated section aerodynamic characteristics						
c_n	-0.284	-0.275	-0.259	-0.245	-0.212	-0.103
$c_{m_{c/4}}$	0.012	0.028	0.018	0.024	0.006	-0.025

Integrated panel aerodynamic characteristics	
$C_N' = -0.237$ $C_B' = -0.093$ $C_M' = 0.014$	y'_{cp} (percent $b'/2$) = 39.4 x_{cp} (percent c') = 31.1

*Resultant pressure coefficient.
**Estimated value.

TABLE 4

TABULATION OF PRESSURE COEFFICIENTS AND AERODYNAMIC CHARACTERISTICS

OF THE X-1 WING; PUSH-OVER AT $M \approx 0.99$ - Concluded

(q) $M = 0.942$; $C_{N_A} = -0.202$; $\delta_{a_L} = 0.65^\circ$ down

Orifice	Pressure coefficients						
	Station A*	Station B*	Station C*	Station D		Station E*	Station F*
				Upper	Lower		
1	-----	-----	-----	1.195	-----	-----	-----
2	-1.233	-1.039	-1.005	.687	-0.392	-----	-0.776
3	-1.165	-.893	-----	.486	-.392	-.740	-.631
4	--.859	-----	-.716	.289	-----	-.674	-----
5	-----	**-.483	-.364	-----	-.315	-.534	-.522
6	-.379	-.383	-.330	-.033	-.312	-.340	-.218
7	-----	-.279	-.199	-.210	-.424	-----	-.109
8	-.255	-.291	-.313	-.307	-----	-.243	-.080
9	-----	-----	-----	-.332	-----	-----	-----
10	-.133	-.255	-.228	-.417	-.618	-----	-.056
11	-.131	-.223	-----	-.477	-.666	-.175	-.068
12	-.141	-.182	-.177	-.521	-.659	-.141	-----
13	-.184	-.097	-.167	-.574	-----	-----	.001
14	-.092	-----	-----	-.571	-.795	-.109	.061
15	-.146	-.056	-.165	-.647	-.829	-----	.066
16	-.116	-.085	-.180	-----	-.836	-.053	-----
17	-.138	-.048	-.066	-.678	-.827	-.034	.041
18	-----	-.318	-----	-----	-----	-----	-----
19	-----	-.323	-----	-.659	-----	-----	.116
20	-----	-----	-----	-.586	-----	-.082	.046
21	-----	-----	-----	-.666	-----	-----	-----

Integrated section aerodynamic characteristics						
c_n	-0.264	-0.274	-0.253	-0.253	-0.223	-0.106
$c_{m_{c/4}}$	0.009	0.026	0.020	0.026	0.008	-0.026

Integrated panel aerodynamic characteristics	
$C_N' = -0.239$	
$C_B' = -0.096$	y'_{cp} (percent $b'/2$) = 40.1
$C_M' = 0.015$	x_{cp} (percent c') = 31.1

*Resultant pressure coefficient.
**Estimated value.

TABLE 5

TABULATION OF PRESSURE COEFFICIENTS AND AERODYNAMIC CHARACTERISTICS

OF THE X-1 WING; PULL-UP AT $M \approx 1.16$

(a) $M = 1.189$; $C_{N_A} = 0.399$; $\delta_{a_L} = 0.75^{\circ}$ down

Orifice	Pressure coefficients						
	Station A*	Station B*	Station C*	Station D		Station E*	Station F*
				Upper	Lower		
1	-----	-----	-----	1.270	-----	-----	-----
2	1.025	0.861	0.850	.325	0.900	0.978	0.770
3	1.008	.831	.767	.168	.770	.831	.572
4	.948	.736	.646	.021	-----	.654	-----
5	-----	.672	.674	-----	.522	.548	.470
6	.586	.565	.538	-.184	.334	.460	.368
7	-----	.572	.520	-.245	.204	-----	.304
8	.486	.523	.428	-.303	-----	.466	.278
9	-----	-----	-----	-.339	-----	-----	-----
10	.495	.433	.443	-.389	.016	-----	.256
11	.454	.450		-.401	-.001	.365	.212
12	.420	.392	.426	-.442	-.054	.365	-----
13	.368	.417	.409	-.475	-----	------	.191
14	.401	-----	-----	-.474	-.142	.360	.150
15	.331	.424	.358	-.524	-.187	-----	.129
16	.327	.392	.349	-----	-.195	.369	-----
17	.290	.452	.465	-.544	-.175	.347	.091
18	-----	.225	-----	-----	-----	-----	-----
19	-----	.234	-----	-.517	-----	-----	.095
20	-----	-----	-----	-.467	-----	.228	.060
21	-----	-----	-----	-.516	-----	-----	-----

Integrated section aerodynamic characteristics						
c_n	0.456	0.470	0.463	0.435	0.412	0.240
$c_{m_{c/4}}$	-0.057	-0.069	-0.090	-0.082	-0.068	-0.018

Integrated panel aerodynamic characteristics	
$C_N' = 0.424$	
$C_B' = 0.175$	y'_{cp} (percent $b'/2$) = 41.3
$C_M' = -0.068$	x_{cp} (percent c') = 41.0

*Resultant pressure coefficient.

TABLE 5

TABULATION OF PRESSURE COEFFICIENTS AND AERODYNAMIC CHARACTERISTICS

OF THE X-1 WING; PULL-UP AT $M \approx 1.16$ - Continued

(b) $M = 1.187$; $C_{N_A} = 0.487$; $\delta_{a_L} = 0.82^\circ$ down

Orifice	Pressure coefficients						
	Station A*	Station B*	Station C*	Station D		Station E*	Station F*
				Upper	Lower		
1	-----	-----	-----	1.218	-----	-----	-----
2	1.234	1.110	1.063	.229	1.000	1.131	0.906
3	1.246	1.046	.994	.105	.864	.994	.797
4	1.210	.919	.827	-.059	-----	.824	-----
5	-----	.817	.817	-----	.571	.704	.586
6	.756	.722	.647	-.257	.397	.569	.443
7	-----	.699	.628	-.300	.240	-----	.366
8	.586	.631	.549	-.360	-----	.549	.321
9	-----	-----	-----	-.389	-----	-----	-----
10	.603	.531	.516	-.434	.112	-----	.287
11	.561	.550	-----	-.437	.040	.426	.248
12	.518	.504	.511	-.484	-.021	.432	-----
13	.454	.550	.501	-.522	-----	-----	.218
14	.470	-----	-----	-.514	-.112	.414	.176
15	.402	.501	.430	-.556	-.157	-----	.157
16	.411	.463	.432	-----	-.164	.417	-----
17	.477	.538	.552	-.570	-.134	.415	.120
18	-----	.292	-----	-----	-----	-----	-----
19	-----	.304	-----	-.543	-----	-----	.106
20	-----	-----	-----	-.491	-----	.277	.076
21	-----	-----	-----	-.563	-----	-----	-----

Integrated section aerodynamic characteristics						
c_n	0.578	0.565	0.569	0.524	0.485	0.294
$c_{m_{c/4}}$	-0.072	-0.087	-0.108	-0.098	-0.078	-0.020

Integrated panel aerodynamic characteristics	
$C_N' = 0.515$ $C_B' = 0.211$ $C_M' = -0.082$	y'_{cp} (percent $b'/2$) = 41.1 x_{cp} (percent c') = 41.0

*Resultant pressure coefficient.

TABLE 5

TABULATION OF PRESSURE COEFFICIENTS AND AERODYNAMIC CHARACTERISTICS

OF THE X-1 WING; PULL-UP AT $M \approx 1.16$ - Continued

(c) $M = 1.186$; $C_{N_A} = 0.596$; $\delta_{a_L} = 0.90^\circ$ down

Orifice	Pressure coefficients						
	Station A*	Station B*	Station C*	Station D		Station E*	Station F*
				Upper	Lower		
1	-----	-----	-----	1.146	-----	-----	-----
2	1.489	1.319	1.267	-.068	1.073	1.274	1.067
3	1.468	1.247	1.173	-.001	.938	1.168	.911
4	1.438	1.126	1.035	-.120	-----	.990	-----
5	-----	.972	.968	-----	.630	.866	.723
6	.914	.862	.784	-.329	.453	.693	.530
7	-----	.832	.748	-.355	.301	-----	.446
8	.700	.761	.666	-.401	-----	.658	.383
9	-----	-----	-----	-.447	-----	-----	-----
10	.710	.639	.638	-.489	.181	-----	.324
11	.646	.649	-----	-.497	.097	.528	.292
12	.594	.623	.591	-.526	.027	.514	-----
13	.529	.665	.575	-.571	-----	-----	.260
14	.541	-----	-----	-.551	-.078	.500	.220
15	.479	.623	.532	-.593	-.118	-----	.185
16	.503	.568	.521	-----	-.118	.504	-----
17	.587	.634	.638	-.605	-.077	.500	.158
18	-----	.344	-----	-----	-----	-----	-----
19	-----	.371	-----	-.583	-----	-----	.141
20	-----	-----	-----	-.538	-----	.343	.110
21	-----	-----	-----	-.578	-----	-----	-----

Integrated section aerodynamic characteristics						
c_n	0.685	0.681	0.680	0.635	0.588	0.354
$c_{m_{c/4}}$	-0.083	-0.105	-0.127	-0.116	-0.096	-0.027

Integrated panel aerodynamic characteristics	
$C_N' = 0.620$	
$C_B' = 0.254$	y'_{cp} (percent $b'/2$) = 41.0
$C_M' = -0.098$	x_{cp} (percent c') = 40.9

*Resultant pressure coefficient.

TABLE 5

TABULATION OF PRESSURE COEFFICIENTS AND AERODYNAMIC CHARACTERISTICS

OF THE X-1 WING; PULL-UP AT $M \approx 1.16$ - Continued

(d) $M = 1.176$; $C_{N_A} = 0.710$; $\delta_{a_L} = 1.00^\circ$ down

Orifice	Pressure coefficients						
	Station A*	Station B*	Station C*	Station D		Station E*	Station F*
				Upper	Lower		
1	-------	------	-----	1.057	-----	-----	-----
2	**1.682	1.595	1.510	-.256	1.146	1.459	1.270
3	**1.778	1.535	1.380	-.240	1.030	1.373	1.139
4	**1.661	1.325	1.267	-.247	-----	1.215	-----
5	-------	1.187	1.164	-----	.691	1.060	.899
6	1.098	1.032	.954	-.417	.514	.872	.660
7	-------	.986	.906	-.439	.370	-----	.530
8	.851	.892	.813	-.484	-----	.791	.476
9	-------	------	-----	-.514	-----	-----	-----
10	.817	.758	.769	-.615	.224	-----	.416
11	.726	.789	-----	-.614	.131	.645	.375
12	.693	.748	.714	-.601	.076	.626	-----
13	.652	**.765	.689	-.624	-----	-----	.325
14	.700	------	-----	-.616	-.037	.597	.284
15	.611	.751	.637	-.656	-.066	-----	.266
16	.686	.817	.630	-----	-.055	.615	-----
17	.648	**.799	.760	-.672	-.022	.616	.237
18	-------	.526	-----	-----	-----	-----	-----
19	-------	.539	-----	-.635	-----	-----	.195
20	-------	------	-----	-.604	-----	.371	.158
21	-------	------	-----	-.627	-----	-----	-----

Integrated section aerodynamic characteristics						
c_n	0.818	0.841	0.819	0.770	0.706	0.450
$c_{m_{c/4}}$	-0.110	-0.138	-0.153	-0.139	-0.110	-0.038

Integrated panel aerodynamic characteristics	
$C_N' = 0.754$ $C_B' = 0.310$ $C_M' = -0.124$	y'_{cp} (percent $b'/2$) = 41.1 x_{cp} (percent c') = 41.5

*Resultant pressure coefficient.
**Estimated value.

TABLE 5

TABULATION OF PRESSURE COEFFICIENTS AND AERODYNAMIC CHARACTERISTICS

OF THE X-1 WING; PULL-UP AT $M \approx 1.16$ - Continued

(e) $M = 1.169$; $C_{N_A} = 0.817$; $\delta_{a_L} = 0.95^\circ$ down

Orifice	Pressure coefficients						
	Station A*	Station B*	Station C*	Station D		Station E*	Station F*
				Upper	Lower		
1	-------	-------	-------	0.962	-----	-----	-----
2	**1.941	1.794	**1.711	-.414	1.204	1.609	1.414
3	**1.919	**1.695	1.647	-.391	1.079	1.525	1.304
4	**1.778	1.516	1.431	-.377	-----	1.373	-----
5	-------	1.342	1.322	-------	.756	1.220	1.040
6	**1.262	1.202	1.111	-.490	.571	1.014	.793
7	-------	**1.082	1.051	-.493	.432	-----	.613
8	1.012	1.030	.939	-.554	-----	.911	.559
9	-------	-------	-------	-.571	-----	-----	-----
10	.935	.932	.892	-.619	.265	-----	.519
11	.842	.901	-------	-.628	.168	.742	.440
12	.820	.858	.838	-.647	.114	.714	-----
13	.786	** .838	.796	-.671	-----	-----	.380
14	.825	-------	-------	-.666	-.013	.702	.352
15	.746	.851	.741	-.696	-.009	-----	.316
16	.738	.899	.734	-------	.002	.709	-----
17	.695	**.890	.885	**-.737	.044	.688	.320
18	-------	.620	-------	-------	-----	-----	-----
19	-------	.638	-------	-.675	-----	-----	.262
20	-------	-------	-------	-.644	-----	.369	.208
21	-------	-------	-------	-.626	-----	-----	-----

Integrated section aerodynamic characteristics						
c_n	0.936	0.954	0.957	0.859	0.809	0.538
$c_{m_{c/4}}$	-0.123	-0.155	-0.180	-0.157	-0.125	-0.054

Integrated panel aerodynamic characteristics	
$C_N' = 0.860$ $C_B' = 0.354$ $C_M' = 0.141$	y'_{cp} (percent $b'/2$) = 41.2 x_{cp} (percent c') = 41.4

*Resultant pressure coefficient.
**Estimated value.

NACA

TABLE 5

TABULATION OF PRESSURE COEFFICIENTS AND AERODYNAMIC CHARACTERISTICS

OF THE X-1 WING; PULL-UP AT $M \approx 1.16$ - Continued

(f) $M = 1.158$; $C_{N_A} = 0.896$; $\delta_{a_L} = 1.00^\circ$ down

Orifice	Pressure coefficients						
	Station A*	Station B*	Station C*	Station D		Station E*	Station F*
				Upper	Lower		
1	-------	-------	-----	0.877	------	-----	-----
2	**2.011	**1.919	1.861	-.522	1.238	1.749	1.542
3	**1.971	**1.769	1.697	-.498	1.111	1.662	1.404
4	**1.838	1.653	1.556	-.480	------	1.492	-----
5	-------	1.483	1.422	-------	**.818	1.359	1.148
6	**1.335	1.317	1.235	-.557	.601	1.115	.904
7	-------	**1.190	1.141	-.570	.462	-----	.704
8	1.119	1.105	1.063	-.600	------	.995	.634
9	-------	-------	-----	-.628	------	-----	-----
10	1.017	.995	.979	-.681	.289	-----	.576
11	.924	.974	-----	-.681	.203	.825	.511
12	.894	.938	.922	-.716	.145	.810	-----
13	.845	**.903	.877	-.722	------	-----	.444
14	**.855	-------	-----	-.726	.037	.784	.420
15	.834	**.932	.824	-.746	.083	-----	.400
16	.790	.976	.808	-------	.047	.784	-----
17	.728	**.993	.987	**-.790	.083	.783	.414
18	-------	.684	-----	-------	------	-----	-----
19	-------	.732	-----	-.726	------	-----	.332
20	-------	-------	-----	-.691	------	.394	.269
21	-------	-------	-----	-.628	------	-----	-----

Integrated section aerodynamic characteristics						
c_n	1.001	1.046	1.054	0.977	0.902	0.612
$c_{m_{c/4}}$	-0.136	-0.175	-0.203	-0.180	-0.140	-0.066

Integrated panel aerodynamic characteristics	
$C_N' = 0.955$	
$C_B' = 0.399$	y'_{cp} (percent $b'/2$) = 41.8
$C_M' = -0.161$	x_{cp} (percent c') = 41.9

*Resultant pressure coefficient.
**Estimated value.

TABLE 5

TABULATION OF PRESSURE COEFFICIENTS AND AERODYNAMIC CHARACTERISTICS

OF THE X-1 WING; PULL-UP AT $M \approx 1.16$ - Continued

(g) $M = 1.134$; $C_{N_A} = 1.013$; $\delta_{a_L} = 0.95^{\circ}$ down

Orifice	Pressure coefficients						
	Station A*	Station B*	Station C*	Station D		Station E*	Station F*
				Upper	Lower		
1	-------	-------	-------	0.737	-------	-------	-------
2	**2.301	**2.102	**2.108	-.668	1.275	1.880	1.715
3	**2.101	**1.972	**1.844	-.644	1.167	**1.800	**1.576
4	**1.942	1.772	1.711	-.605	-------	**1.649	-------
5	-------	1.615	1.612	-------	**.907	1.529	1.280
6	**1.480	1.466	1.366	-.664	.660	1.249	1.019
7	-------	**1.305	1.269	-.639	.507	-------	.793
8	1.250	1.233	1.181	-.692	-------	1.113	.717
9	-------	-------	-------	-.720	-------	-------	-------
10	1.161	1.116	1.091	-.759	.324	-------	.648
11	1.055	1.086	-------	-.761	.229	.934	.586
12	1.014	1.038	1.041	-.797	.167	.915	-------
13	**.938	**1.014	.992	-.792	-------	-------	.528
14	**1.017	-------	-------	-.793	.082	.890	.509
15	.904	**.975	.945	-.818	.100	-------	.495
16	.834	**1.044	.975	-------	.107	.897	-------
17	.765	**1.082	**1.129	**-.885	.141	.909	.510
18	-------	.591	-------	-------	-------	-------	-------
19	-------	.622	-------	-.778	-------	-------	.403
20	-------	-------	-------	-.753	-------	.443	.324
21	-------	-------	-------	-.652	-------	-------	-------

Integrated section aerodynamic characteristics						
c_n	1.121	1.128	1.179	1.089	1.004	0.717
$c_{m_{c/4}}$	-0.161	-0.174	-0.228	-0.196	-0.155	-0.087

Integrated panel aerodynamic characteristics	
$C_N' = 1.058$	
$C_B' = 0.445$	y'_{cp} (percent $b'/2$) = 42.1
$C_M' = -0.174$	x_{cp} (percent c') = 41.4

*Resultant pressure coefficient.
**Estimated value.

TABLE 5

TABULATION OF PRESSURE COEFFICIENTS AND AERODYNAMIC CHARACTERISTICS

OF THE X-1 WING; PULL-UP AT $M \approx 1.16$ - Concluded

(h) $M = 1.103$; $C_{N_A} = 1.125$; $\delta_{a_L} = 0.95^\circ$ down

Orifice	Pressure coefficients						
	Station A*	Station B*	Station C*	Station D		Station E*	Station F*
				Upper	Lower		
1	-------	-------	-------	0.582	------	-------	-------
2	**2.448	**2.324	**2.340	-.726	1.303	**2.092	1.906
3	**2.123	**2.084	2.084	-.818	1.197	**1.968	**1.763
4	**2.014	1.945	1.883	-.758	------	**1.875	-------
5	-------	1.790	1.766	--------	**.889	1.695	1.441
6	**1.540	1.619	1.557	-.802	.701	1.422	1.165
7	-------	**1.408	1.359	-.783	.556	-------	**.968
8	1.425	1.371	1.340	-.792	------	1.205	.868
9	-------	-------	-------	-.814	------	-------	-------
10	1.329	1.258	1.244	-.863	.359	-------	.744
11	1.260	1.235	-------	-.863	.288	1.080	.686
12	**1.159	**1.150	**1.193	-.899	.258	1.066	-------
13	**1.088	**1.119	**1.131	-.880	------	-------	.657
14	**1.030	-------	-------	-.902	.190	1.033	.663
15	.944	.989	**1.145	-.907	.187	-------	.666
16	.914	.992	1.162	--------	.213	1.100	-------
17	.875	**1.049	**1.260	**-1.008	.207	1.050	.674
18	-------	.609	-------	--------	------	-------	-------
19	-------	.725	-------	**-.856	------	-------	.530
20	-------	-------	-------	-.760	------	.534	.432
21	-------	-------	-------	-.708	------	-------	-------

Integrated section aerodynamic characteristics						
c_n	1.216	1.226	1.324	1.250	1.146	0.848
$c_{m_{c/4}}$	-0.181	-0.185	-0.251	-0.234	-0.188	-0.115

Integrated panel aerodynamic characteristics	
$C_N' = 1.182$ $C_B' = 0.504$ $C_M' = -0.198$	y'_{cp} (percent $b'/2$) = 42.7 x_{cp} (percent c') = 41.8

*Resultant pressure coefficient.
**Estimated value.

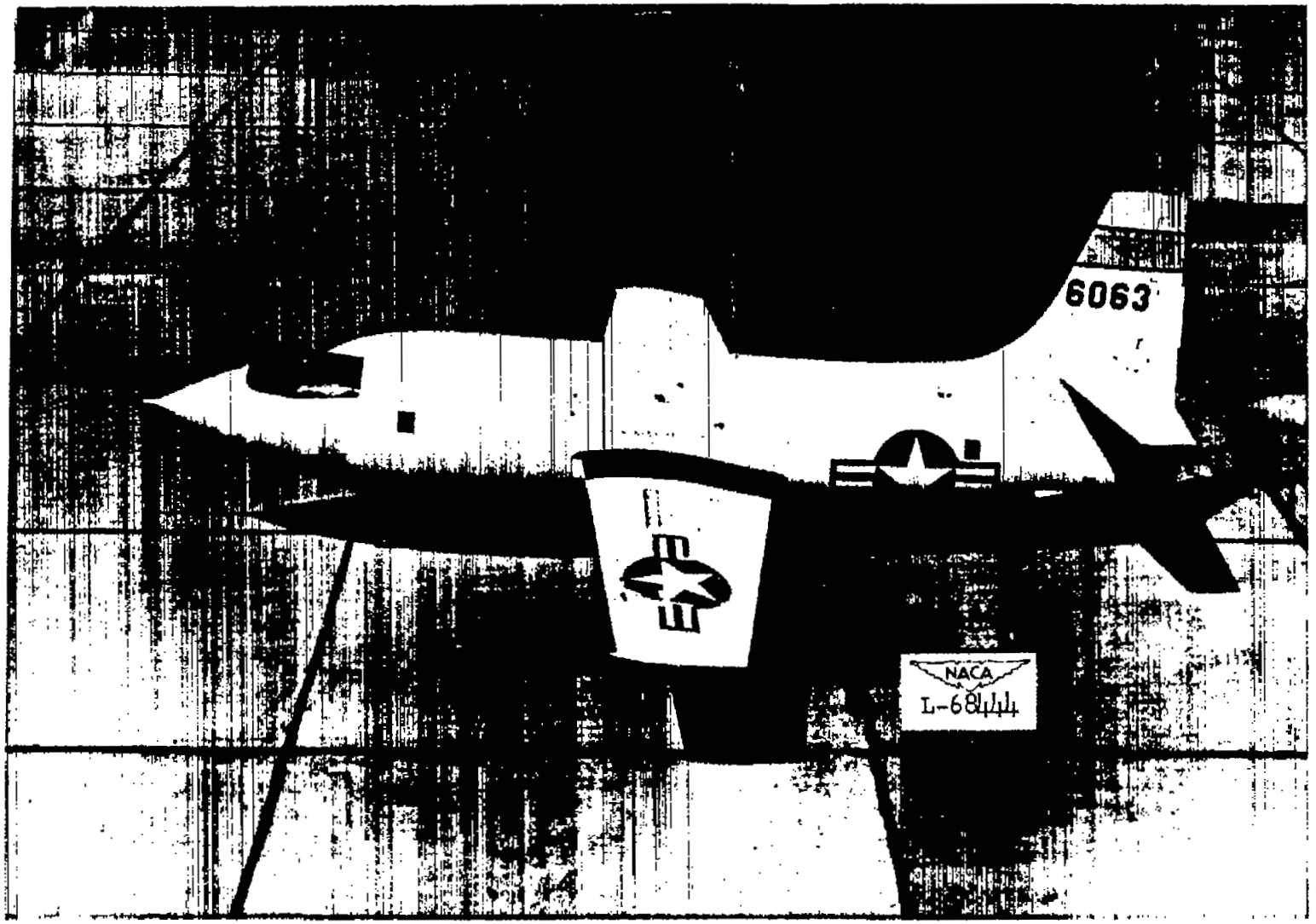

Figure 1.- Photograph of X-1 airplane.

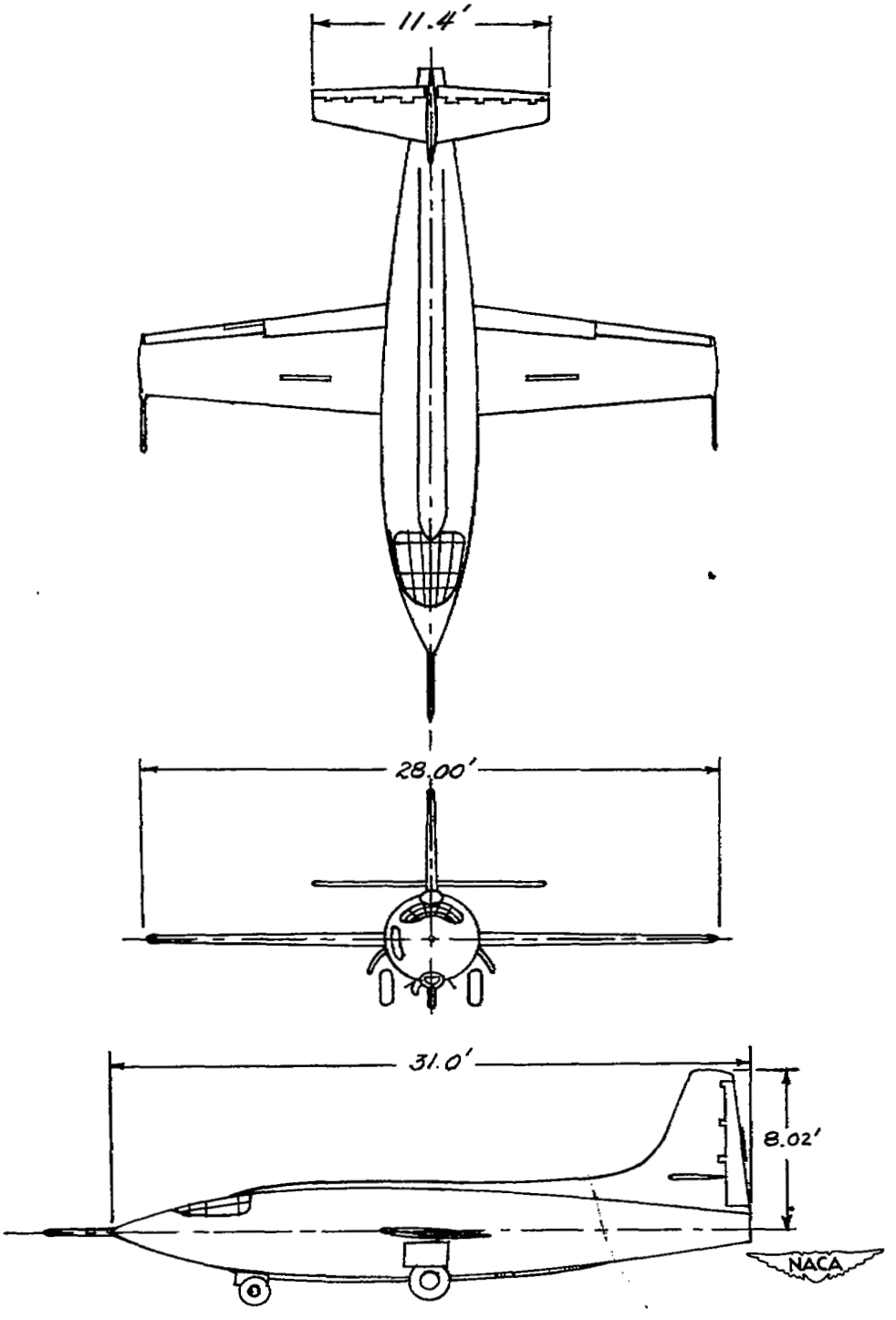

Figure 2.- Three-view drawing of X-1 airplane.

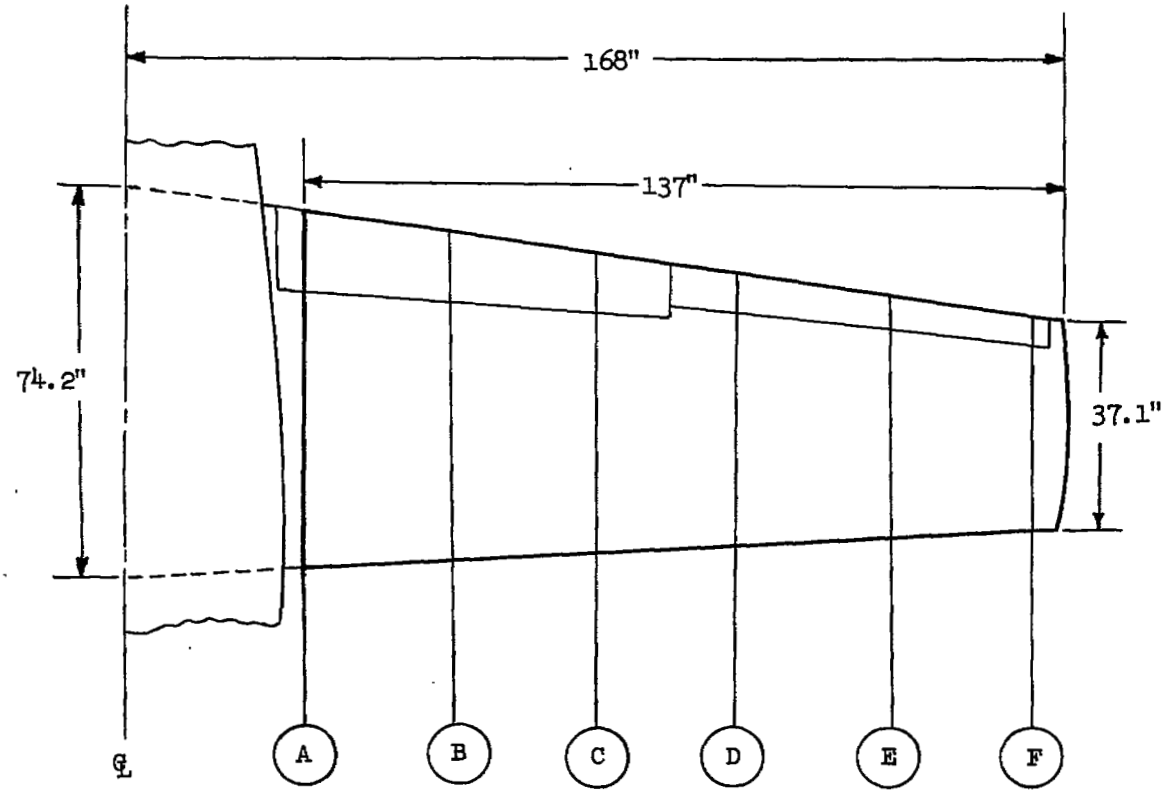

Span station	A	B	C	D	E	F
Distance from airplane center line, percent b/2	18.5	33.8	49.1	64.4	79.8	95.1
Distance from station A, percent b'/2	0	18.8	37.6	56.4	75.2	94.0

(a) Spanwise.

Figure 3.- Spanwise and chordwise locations of pressure measuring orifices.

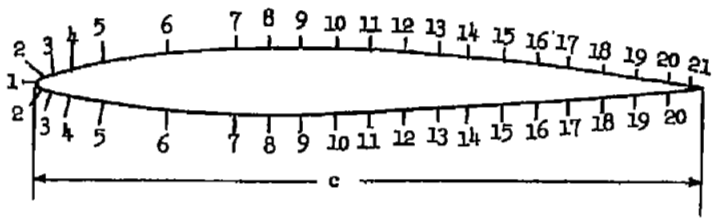

	Orifice station location (percent chord)											
Span station	A		B		C		D		E		F	
Orifice	Upper	Lower	Upper	Lower	Upper	Lower	Upper	Lower	Upper	Lower	Upper	Lower
1	0		0		0		0		0		0	
2	1.16	1.16	1.43	1.26	1.18	1.28	1.29	1.38	1.17	1.17	1.16	1.23
3	2.40	2.40	2.72	2.59	2.40	2.40	2.66	2.66	2.27	2.27	2.64	2.39
4	4.79	4.79	5.21	5.06	5.04	5.04	5.16	5.16	4.90	4.90	5.49	5.03
5	9.85	9.98	10.45	10.45	9.64	9.64	10.95	10.95	8.91	8.91	10.42	10.16
6	19.75	19.92	20.00	20.00	20.00	20.00	19.76	20.10	20.00	19.90	19.92	19.66
7	29.80	30.00	29.40	30.00	29.32	30.00	30.00	30.00	30.00	30.00	29.75	29.62
8	34.85	35.05	34.45	35.20	34.78	35.20	34.80	35.10	35.00	34.92	35.05	35.05
9	40.00	40.10	39.90	40.00	39.58	40.00	40.00	40.15	40.00	40.00	40.07	40.07
10	45.10	45.00	45.17	45.38	44.40	45.92	45.15	45.35	45.15	44.52	45.00	45.00
11	50.20	49.70	50.10	49.95	49.52	50.18	50.18	50.30	50.08	49.90	50.02	50.00
12	54.90	54.90	55.00	54.92	55.10	55.20	55.28	55.28	55.50	54.90	55.05	54.95
13	60.38	60.00	61.08	59.82	59.90	60.00	60.80	60.60	59.50	60.50	59.70	60.00
14	65.00	65.00	65.20	65.00	65.00	65.00	65.40	65.60	64.95	65.00	64.95	64.95
15	70.00	70.00	70.15	70.15	70.00	70.00	69.85	69.95	69.90	70.00	70.05	70.05
16	74.10	74.42	74.00	74.00	74.00	74.38	74.40	74.20	73.70	74.60	73.85	74.30
17	78.60	78.60	78.60	78.60	78.00	78.20	79.50	79.70	81.00	80.50	79.85	80.05
18	84.90	85.08	85.10	85.00	84.95	84.95	85.62	85.40	85.70	85.70	85.70	85.70
19	90.00	90.00	90.30	89.96	90.00	90.00	90.00	90.00	89.95	89.95	89.60	89.60
20	94.80	94.80	95.00	94.50	95.00	95.10	95.00	95.00	95.00	95.30	95.10	95.30
21	97.65	-----	97.60	-----	97.30	-----	97.10	-----	96.70	-----	96.10	-----

(b) Chordwise.

Figure 3.- Concluded.

NASA Technical Library
3 1176 01436 8709

[redacted]