[redacted]

Copy
RM L54E27

USR 8209
10 Aug 54

TECH LIBRARY KAFB, NM
0144140

NACA RM L54E27

7553

NACA

RESEARCH MEMORANDUM

STUDY OF THE ATTACK OF AN AUTOMATICALLY CONTROLLED INTERCEPTOR ON A MANEUVERING BOMBER WITH EMPHASIS ON PROPER COORDINATION OF LIFT-ACCELERATION AND ROLL-ANGLE COMMANDS DURING ROLLING MANEUVERS

By Charles W. Mathews

Langley Aeronautical Laboratory
Langley Field, Va.

[redacted]

NATIONAL ADVISORY COMMITTEE
FOR AERONAUTICS
WASHINGTON
August 4, 1954

[redacted]

[redacted]

TECH LIBRARY KAFB, NM

0144140

[redacted]

NATIONAL ADVISORY COMMITTEE FOR AERONAUTICS

RESEARCH MEMORANDUM

STUDY OF THE ATTACK OF AN AUTOMATICALLY CONTROLLED INTERCEPTOR ON A MANEUVERING BOMBER WITH EMPHASIS ON PROPER COORDINATION OF LIFT-ACCELERATION AND ROLL-ANGLE COMMANDS DURING ROLLING MANEUVERS

By Charles W. Mathews

SUMMARY

The present study of the automatic interception problem is primarily concerned with investigation of the proper means of coordinating the lift-acceleration commands and the roll-attitude commands to the autopilot in order to minimize transient tracking errors encountered during bomber evasion. The study was made by utilizing a Reeves Electronic Analogue Computer to simulate simplified versions of interceptor-bomber encounters. The bomber maneuvers used during the study were designed to require various amounts of rolling on the part of the interceptor in order for it to continue tracking. Several methods of acceleration-bank coordination were studied. With some, the acceleration command was applied immediately; whereas with others, the command was delayed until the interceptor had rolled.

For the interceptor assumed in the study, it was found that the best tracking was obtained when the acceleration commands were applied immediately. An acceleration command proportional to the normal component of the steering error was found most suitable. The success of this type of coordination, however, was found to be dependent on the roll characteristics of the interceptor. This type of coordination was successful for an airplane which had roll performance of the type usually obtained with a heavily loaded supersonic airplane flying at high altitude (a maximum rolling acceleration of 4 radians per second per second and a maximum rolling velocity of 12 radians per second). This type of coordination was unsuccessful for an airplane which had the same value of maximum rolling acceleration but which had a much lower value of maximum rolling velocity (2 radians per second). When the roll rate performance of the interceptor was good the airplane could counter a diving maneuver of the bomber almost as effectively by rolling to the inverted position as by performing a push-down without rolling.

[redacted]

[redacted]

INTRODUCTION

A large amount of effort is being placed on the development of all-weather interceptors for use in defense against bomber attacks. These interceptors will be highly specialized airplanes capable of supersonic speeds. The attack phase of the mission of these interceptors is to be automatically controlled from guidance signals obtained from their airborne radar-fire control system.

The configuration of the interceptor differs from most homing missiles in that interceptors are monowings, whereas most missiles have a cruciform wing arrangement. A most important characteristic of a monowing arrangement is that accelerations can be developed effectively only in the plane of symmetry and perpendicular to the flight path. From consideration of these points, it is fairly obvious that the airplane must be rolled in order to perform turning maneuvers and that the quantities to be controlled in guiding the interceptor are the magnitude and direction of the lift-acceleration vector. The term "lift acceleration" is used herein to denote interceptor accelerations in the plane of symmetry and perpendicular to the flight path.

A number of studies have been made or are in progress to establish functions of the steering error with which lift acceleration (or some steady-state equivalent) and roll angle should be controlled to insure a successful interceptor attack. (For examples, see refs. 1 and 2.) One aspect of the control problem which appears to require further investigation, however, is the proper means of coordinating or combining the lift-acceleration commands with the roll-attitude commands in order to minimize transient steering errors during maneuvers, particularly in the presence of bomber evasion.

The present study is primarily concerned with the problem of maneuver coordination during the attack phase of the mission. Simplified versions of encounters of an automatic interceptor with a maneuvering bomber were investigated through use of a Reeves Electronic Analogue Computer (REAC). Bomber maneuvers were designed to require various amounts of roll on the part of the interceptor in order to continue tracking. For each case several types of acceleration-bank coordination were studied. In addition, the effects on tracking of the range at which the maneuver is initiated, the rate at which the range is closed, and some autopilot parameters were investigated.

SYMBOLS

A,B,C,D,E,	transfer-function coefficients of interceptor (see table II)
a	lift acceleration, ft/sec^2, except when specified in g units
b	wing span, ft
$\bar{c}$	mean aerodynamic chord, ft
C_{L_α}	variation of lift coefficient with angle of attack, $\frac{\partial \frac{L}{qS}}{\partial \alpha}$, per radian
C_{L_δ}	variation of lift coefficient with elevator deflection, $\frac{\partial \frac{L}{qS}}{\partial \delta_e}$, per radian
C_{m_α}	variation of pitching-moment coefficient with angle of attack, $\frac{\partial \frac{M}{qS\bar{c}}}{\partial \alpha}$, per radian
C_{m_q}	variation of pitching-moment coefficient with nondimensional pitching velocity, $\frac{\partial \frac{M}{qS\bar{c}}}{\partial \frac{\dot{\theta}\bar{c}}{2V}}$, per radian
$C_{m_{D\alpha}}$	variation of pitching-moment coefficient with nondimensional rate of change of angle of attack, $\frac{\partial \frac{M}{qS\bar{c}}}{\partial \frac{\dot{\alpha}\bar{c}}{2V}}$, per radian
C_{l_δ}	variation of rolling-moment coefficient with aileron deflection (based on deflection of one aileron), $\frac{\partial \frac{L}{qSb}}{\partial \delta_a}$, per radian
C_{l_p}	variation of rolling-moment coefficient with nondimensional rolling velocity, $\frac{\partial \frac{L}{qSb}}{\partial \frac{\dot{\phi}b}{2V}}$, per radian
$f(\phi)$	signal modifier (function of bank angle)

[redacted]

g	acceleration of gravity, 32.2 ft/sec^2
h	altitude, ft
I_x	moment of inertia of interceptor about x stability axis, slug-ft^2
I_y	moment of inertia of interceptor about y stability axis, slug-ft^2
K	loop gain
k_x	nondimensional radius of gyration of interceptor about x stability axis, $\frac{1}{b}\sqrt{\frac{I_x}{W/g}}$
k_y	nondimensional radius of gyration of interceptor about y stability axis, $\frac{1}{c}\sqrt{\frac{I_y}{W/g}}$
L	lift, lb; also, rolling moment, ft-lb
LS	line of sight
M	Mach number; also, pitching moment, ft-lb
m	miss distance, ft
N	constant
p	Laplace operator, per sec
q	dynamic pressure, $\frac{\rho V^2}{2}$, lb/sq ft
R	range, ft
S	wing area, sq ft
T	time to collision, sec
t	time, sec
V	velocity, ft/sec
W	gross weight of interceptor, lb
α	angle of attack, radians

γ	angle between flight path and horizontal, radians
δ	control deflection, radians (except when specified in degrees)
ζ	angle between bomber path and xy-plane, radians
ϵ	angle between line of sight and horizontal, radians
θ	pitch attitude, radians
$\mu_{\bar{c}}$	interceptor density ratio based on chord, $W/g\rho S\bar{c}$
μ_b	interceptor density ratio based on span, $W/g\rho Sb$
ξ	angle between line of sight and xy-plane (see fig. 1)
ρ	air density, slugs/cu ft
σ	angle between flight path and line of sight (steering error), radians (except when specified in mils)
$\bar{\sigma}$	smoothed steering error, radians
τ	time constant of smoothing filter, sec
ϕ	roll (or bank) angle, radians (except when specified in degrees)
ω	angular velocity, radians/sec

Subscripts:

F	interceptor
B	bomber
xy	in xy-plane
xz	in xz-plane
LS	line of sight
o	initial value
i	input
ϵ	error

R	resultant
σ	steering error
e	elevator
a	aileron or lift acceleration
$\dot{\theta}$	pitching velocity
$\dot{\phi}$	rolling velocity
v	vertical
P	perpendicular to flight path

A dot over a quantity denotes differentiation of that quantity with respect to time.

METHOD OF ANALYSIS

General.- The flight conditions of the hypothetical encounters studied in the present investigation were as follows: An altitude of 50,000 feet and an interceptor Mach number of 1.7. The interceptor was initially tracking in horizontal flight in tail-chase position. At prescribed ranges the bomber initiated constant-acceleration maneuvers (pull-ups, push-downs, or turns) which required various amounts of rolling by the interceptor in order to continue tracking. The control system was designed to steer the interceptor on a pure pursuit course throughout the maneuver by using commands that were functions of the line-of-sight errors.

The foregoing conditions are not necessarily representative in detail of an actual interceptor attack but are believed a reasonable basis for evaluation of various types of acceleration-bank coordination. In order to investigate how the results presented herein might be interpreted in terms of other types of encounters, a brief supplementary analysis was made. This analysis which is presented in appendix A indicates that, for vertical-plane target maneuvers at the ranges considered, the conditions examined herein (for a pursuit course) tax the interceptor slightly less than for a collision course off the beam of the target. Although horizontal maneuvers were not included in the analysis of appendix A, it is well known that horizontal turns on the part of the target would be considerably less effective for the collision course than for the pursuit course. The lead angles required for hits in actual gunnery or rocketry are not considered in the analysis, but it is believed that inclusion of lead angles would not affect significantly the results.

Mechanics of the problem.- The geometry of the attack situation is shown in figure 1. The sign convention utilized herein is shown in the two-dimensional views presented in figure 2. A system of axes was chosen which at any instant is fixed in space. The x-axis is coincident with the flight path (controlled line) of the interceptor (departs from horizontal as the interceptor climbs or dives), the y-axis is horizontal and perpendicular to the x-axis, and the z-axis is orthogonal with the other two.

By reference to figures 1 and 2 the following equations, which have been transformed from the time domain to the complex frequency domain and are written in terms of the Laplace operator, may be seen to apply in the xz-plane:

$$p\sigma_{F_{xz}} = \omega_{LS_{xz}} - \omega_{F_{xz}} \tag{1}$$

$$p\sigma_{B_{xz}} = \omega_{B_{xz}} - \omega_{LS_{xz}} \tag{2}$$

$$\omega_{LS_{xz}} = \frac{V_{B_{xz}} \sin \sigma_{B_{xz}} + V_F \sin \sigma_{F_{xz}}}{R_{xz}} \tag{3}$$

$$\omega_{B_{xz}} = \frac{1}{V_{B_{xz}}} a_{B_{xz}} \tag{4}$$

$$\omega_{F_{xz}} = \frac{1}{V_F} a_{F_{xz}} \tag{5}$$

The same set of equations can be written in the xy-plane by using values of the parameters which apply in the xy-plane.

The considerations presented in appendix B show that certain assumptions which afford simplification of equations (3) and (4) are justified. These assumptions are:

$$R_{xy} = R_{xz} = R$$

$$V_{B_{xy}} = V_{B_{xz}} = V_B$$

[redacted]

$$\sigma_{F_{xy}} = \sin \sigma_{F_{xy}}$$

$$\sigma_{F_{xz}} = \sin \sigma_{F_{xz}}$$

With these assumptions, equations (3) and (4) become, respectively:

$$\omega_{LS_{xz}} = \frac{V_F}{R}\left(\frac{V_B}{V_F}\sigma_{B_{xz}} + \sigma_{F_{xz}}\right) \tag{6}$$

$$\omega_{B_{xz}} = \frac{1}{V_B} a_{B_{xz}} \tag{7}$$

Equations (1), (2), (5), (6), and (7) may be solved simultaneously to give the xz-component of the steering error as a function of the interceptor acceleration and the bomber acceleration. Integrating equations (1) and (2) and substituting equations (5) and (7) gives:

$$\sigma_{F_{xz}} = \frac{\omega_{LS_{xz}}}{p} - \frac{1}{V_F}\frac{a_{F_{xz}}}{p} + \sigma_{F_{xz_o}} \tag{8}$$

$$\sigma_{B_{xz}} = \frac{1}{V_B}\frac{a_{B_{xz}}}{p} - \frac{\omega_{LS_{xz}}}{p} \tag{9}$$

As will be discussed subsequently $\sigma_{F_{xz}}$ will have a small initial value, $\sigma_{F_{xz_o}}$. The initial values of $\sigma_{F_{xy}}$, $\sigma_{B_{xz}}$, and $\sigma_{B_{xy}}$ will be zero. Substituting equations (8) and (9) into equation (6) and rearranging gives:

$$\left[1 + \frac{V_F}{R}\left(\frac{V_B}{V_F} - 1\right)\frac{1}{p}\right]\omega_{LS_{xz}} = \frac{1}{R}\left(\frac{a_{B_{xz}}}{p} - \frac{a_{F_{xz}}}{p} + V_F\sigma_{F_{xz_o}}\right) \tag{10}$$

Differentiating equation (8), solving for $\omega_{LS_{xz}}$, then substituting into equation (10) and solving for $\sigma_{F_{xz}}$ gives:

$$\sigma_{F_{xz}} = \frac{\frac{a_{B_{xz}}}{p} - \frac{R}{V_F} a_{F_{xz}} - \frac{V_B}{V_F} \frac{a_{F_{xz}}}{p} + V_F \sigma_{F_{xz_o}}}{Rp + V_F\left(\frac{V_B}{V_F} - 1\right)} \tag{11}$$

The steering error in the xy-plane can be derived in a similar manner and gives:

$$\sigma_{F_{xy}} = \frac{\frac{a_{B_{xy}}}{p} - \frac{R}{V_F} a_{F_{xy}} - \frac{V_B}{V_F} \frac{a_{F_{xy}}}{p}}{Rp + V_F\left(\frac{V_B}{V_F} - 1\right)} \tag{12}$$

Although R is also time variant, p operates only on the steering errors, the fighter acceleration, or the bomber acceleration. In the automatic interceptor, the steering errors would be sensed by a radar fire-control system and used to derive commands for control of the interceptor's flight path.

Fire-control system.- Detailed consideration of the effects of the dynamics of a radar fire-control system on the interceptor attack is beyond the scope of the present paper. Admittedly, radar noise effects, cross-roll effects (for explanation, see ref. 3), and other factors involving the fire-control system will have an important bearing on the optimization and success of a complete system. The assumption is made herein that erroneous inputs of the cross-roll type can and will be eliminated in the fire-control system itself. A statistical study of the system in the presence of radar-noise inputs was not possible, but filtering was introduced on the computed tracking-line errors to represent the filtering necessary from considerations of noise present in a conical-scan type of tracking radar. The filter time constant chosen was 1/2 second.

Commands to control systems.- As stated in the "Introduction" the logical quantities to control in order to reduce the tracking-line errors are the magnitude and direction of the lift-acceleration vector, because this is the most efficient way to make the interceptor alter its course

in any given direction. Since it is desired to curve the path of the interceptor directly toward the target, the best that can be done is to roll to the bank angle which places the resultant acceleration (vector sum of lift and gravitational accelerations) in the plane which contains the line of sight and the flight path of the interceptor, hereinafter called "the plane of the line of sight." The relations between the required values of bank angle and lift acceleration and the desired acceleration in this plane may be determined from figure 3. With the assumption that the angle $(\phi_{LS} - \phi_{F_i})$ is small, the approximate relations are

$$a_{F_i} = g \cos \gamma_F \cos \phi_{LS} + a_{F_{LS}} \tag{13}$$

$$\phi_{F_i} = \phi_{LS} - \frac{\sin \phi_{LS}}{\cos \phi_{LS} + \dfrac{a_{F_{LS}}}{g \cos \gamma_F}} \tag{14}$$

The desired magnitude of the acceleration in the plane of the line of sight $a_{F_{LS}}$ would be made some function of the steering errors.

Although the foregoing expressions in one form or another have been considered for use in interceptor control systems, they have the disadvantage of being rather complicated nonlinear functions of three variables and require a vertical reference in the interceptor control computer. Since much simplification is afforded and the need for a vertical reference is eliminated if the effect of the earth's gravitational field is neglected in the computation of commands, the feasibility of such a modification was considered. Equations (13) and (14) become

$$\phi_{F_i} = \phi_{LS} \tag{15}$$

$$a_{F_i} = a_{F_{LS}} \tag{16}$$

With these commands the interceptor rolls to place the lift-acceleration vector in the plane of the line of sight. Except for vertical-plane maneuvers a component of gravity will exist perpendicular to the plane of the line of sight. As a result there will be some tendency for the airplane to drop out of the line-of-sight plane, so that the vertical error is increased and the plane of the line of sight and the interceptor

bank angle gradually rotate toward the vertical. If the lift-acceleration command increases rapidly with increase in steering error, the vertical errors resulting from neglect of gravitational effects in the foregoing sequence are felt to be small enough to justify investigation of a system wherein gravitational acceleration inputs are not incorporated in the command computer. The system that was investigated herein, therefore, was designed to roll the lift-acceleration vector into the plane of the line of sight and to supply lift-acceleration commands proportional to the steering errors with as high a gain as was feasible from considerations of the stability of the tracking loop.

A system which controls lift acceleration solely in proportion to steering error will have at least a small bias error while tracking steadily in level flight, since the airplane in this condition must maintain a lift acceleration of 1 g. Under conditions where the interceptor must maintain even higher steady lift accelerations (in order to track a maneuvering bomber), a larger bias error will exist. These errors might be gradually reduced by supplying an additional command in lift acceleration proportional to the integral of the steering errors. Addition of an integral signal was not possible in the present analysis due to limitations on the amount of REAC equipment available; however, this omission was considered permissible in that the break frequency of the combined proportional plus integral signal usually must be several octaves below the primary resonant frequency of the tracking loop in order to prevent the phase shifts introduced by the integrator from affecting the stability of the system. (See discussion of integral equalization in ref. 4.) The integral signal therefore could not have much effect on short-period transient errors and, in particular, should not affect the comparison between various forms of acceleration—bank-angle coordination.

Signals proportional to steering-error rate might also be considered for improving the high-frequency response of the tracking loop. This type of signal was not investigated in the present study, primarily for the same reason that an integral signal was omitted. Incorporation of a derivative signal proportional to the actual steering-error rate can not be justified on the basis that its use would cancel the filtering purposely provided for signal smoothing. It is possible, however, to mechanize a derivative signal that would sense only the steering-error rates generated by interceptor motion and such a signal would be useful in providing additional stability in the tracking loop. In recognition of the fact that higher gains could be utilized with the addition of such a derivative signal the gains were adjusted to give a much more marginal stability condition than would normally exist in an interceptor control system. The tracking-loop gain was adjusted simply by making trial runs until this marginal stability condition was obtained. This gain was found to be affected primarily by range but even the range effect was not particularly large. No attempt was made to adjust the loop gain

throughout a given run. However, the value used was slightly different for the two maneuvering ranges that were investigated. The gains attained under these marginal stability conditions were believed to approach closely values which would be required in an actual system for tight tracking.

Mechanization of commands.- As may be seen from figure 3 the bank angle required to place the lift-acceleration vector in the plane of the line of sight is established by the components of the steering error in the xy- and xz-plane. The following relation applies

$$\phi_{F_i} = \phi_{LS} \approx \tan^{-1}\left(\frac{\sigma_{F_{xy}}}{\sigma_{F_{xz}}}\right) \tag{17}$$

A smoothed version of this bank-angle command was compared with the existing bank angle to provide the error signal to the aileron channel of the autopilot. There would be no need for absolute bank angles in the case of an actual interceptor since the bank-angle error could be determined directly from the gimbals of the tracking radar.

An interesting point in connection with equation (17) is that the bank-angle command is indeterminant when the steering error is zero. This condition has presented a problem in many interceptor control systems in that small signal fluctuations (noise) may cause the interceptor to roll violently back and forth. Unfortunately, this problem could not be investigated because, in the present study, the REAC resolvers were used in a manner which precluded rolls in both directions from the wings-level condition. If this roll indeterminancy is a problem, it might be avoided by modifying the bank-angle-error signal in a manner to reduce the gain as the steering goes to zero. Such a modifying function might take the form:

$$\phi_\epsilon = \frac{\sigma_{F_R}}{N + \sigma_{F_R}} \phi_\epsilon$$

where $N \ll 1$, σ_{F_R} is the resultant steering error, and ϕ_ϵ is the modified bank-angle error. If a vertical reference were utilized, such a modifying function might be used to call for zero bank (wings level) as the steering error goes to zero.

In all cases considered herein, once the bank-angle error was reduced to zero, the lift-acceleration command was given by the relation:

$$a_{F_i} = K_\sigma \bar{\sigma}_{F_R} = K_\sigma \sqrt{\bar{\sigma}_{F_{xz}}^{\,2} + \bar{\sigma}_{F_{xy}}^{\,2}} \tag{18}$$

In some cases while the airplane was rolling, this command was as given by equation (18) but in other cases this command was modified in order to investigate the effects of acceleration-bank coordination. The following forms of coordination were investigated:

(a) Command in lift acceleration proportional to the resultant steering error and initiated immediately on detection of an error

(b) Command in lift acceleration proportional to the resultant steering error but a 1 g command sustained while rolling

(c) Command in lift acceleration proportional to the resultant steering error but a zero g command sustained while rolling

(d) Command in lift acceleration proportional to the normal component of the steering error and initiated immediately on detection of an error

The first condition listed above is really an uncoordinated condition; however, such a scheme might possibly be used for an airplane having a rapid roll response. Accelerations can be established at the earliest moment and the rapid rolling prevents components of acceleration which are out of the plane of the line of sight from existing for any important length of time. The second type of coordination might be used where the airplane has poor roll response relative to its response in normal acceleration. In effect, the status quo of the lift acceleration is maintained while the airplane rolls. The third type represents the case of perfect coordination in vertical-plane maneuvers of the split S type. The resultant acceleration will at all times be in a vertical plane with no tendency for lateral errors to develop during the roll. The maneuver defined herein as a split S is one in which the interceptor is pushed down to a lift acceleration of zero g and then is rolled to an inverted position from which positive lift acceleration is applied. The fourth type of coordination is an attempt to obtain better coordination than was obtained with the first type. Lateral errors, which cannot be reduced until the airplane rolls, will not produce acceleration commands.

Autopilot channels.- The autopilot servomotors were assumed to operate from a roll-attitude-error signal in the aileron channel and from a lift-acceleration-error signal in the elevator channel. Because of the high altitude at which the encounters took place, the inherent damping of the airframe in both roll and pitch was extremely poor. In order to improve the overall response of the airplane-autopilot combination, roll-rate feedback was added to the aileron channel and pitch-rate feedback was added to the elevator channel. The autopilot servomotors were assumed to have perfect response. In using the assumption of perfect

servomotors, however, care was exercised to specify error and rate gains that are realistic in terms of the performance to be expected from actual servomotors. In particular, limits on rate gains were determined on the basis of a preliminary analysis of the airplane-autopilot combination wherein servo dynamics were considered. A servoloop with an undamped natural frequency of 10 cycles per second and a damping ratio of 0.7 was assumed. It was found that with the values of gain selected the response with the perfect "servos" was very similar to the response obtained when an actual servo was considered.

The premise was made that the rudder channel would be used to regulate sideslip and yawing velocity to small values. No studies were made of a system to accomplish the regulation, but this premise was used as a basis for the further assumption that the lateral motion of the airplane could be considered a single degree of freedom in roll.

Airplane.- A tailless delta-wing configuration was used in the present analysis. Stability derivatives were obtained from free-flight tests of rocket models of similar configurations (refs. 5 and 6). The physical characteristics, do not correspond to any particular airplane but are representative of supersonic interceptor designs. The pertinent physical characteristics, stability derivatives, and flight conditions are listed in table I.

The assumption was made that the longitudinal, lateral, and directional motions of the airplane were not coupled. The aerodynamic coupling effect should be small with tight sideslip regulation and, in general, neglect of coupling due to product of inertia can be justified. Perhaps the most important coupling effects would result from gyroscopic and centrifugal moments which would exist in pitch and yaw whenever an airplane is rolled rapidly. Reference 7 presents a theoretical investigation of such effects. The presence of an autopilot which endeavors to regulate sideslip, lift acceleration (approximately the angle of attack), yawing velocity, and pitching velocity should contribute materially to reduction of the importance of these mass effects. These considerations and the fact that the interceptor was expected to sustain high roll rates only for very short periods was used as a basis for neglect of these mass effects although extension of the present investigation to include them would appear desirable.

With the foregoing simplifications and with the further assumptions that the speed of the interceptor is regulated (no change in forward speed throughout the attack), the response of the airplane in lift acceleration to elevator deflection, in roll angle to aileron deflection, and in pitching velocity to elevator deflection can be written as transfer functions of the following forms:

$$\frac{a_F}{\delta_e} = \frac{Dp^2 + E}{Ap^2 + Bp + C}$$

$$\frac{\phi_F}{\delta_a} = \frac{F}{p(Gp + H)}$$

$$\frac{\dot{\theta}_F}{\delta_e} = \frac{Ip + J}{Ap^2 + Bp + C}$$

As is usually the case, the coefficient of the first order term in the numerator of the foregoing acceleration transfer function was found to be very small and, therefore, the term was neglected. The roll transfer function is based on the deflection of one aileron. Expressions for the coefficients of these transfer functions in terms of stability derivatives are presented in table II as are their values for the example airplane. As implied by the use of the transfer function concept, the response of the airplane to control deflections was assumed linear; however, both the lateral and longitudinal control deflections were limited to values below one-quarter radian. Although elevon-type surfaces were assumed, the lateral and longitudinal control were assumed to be independently limited (stops on stick).

Airplane-autopilot combination.- Block diagrams of the elevator and aileron channels of the airplane-autopilot combination are presented in figure 4. The magnitudes of the rate gains which were initially selected were 0.5 radian per radian per second in the elevator channel and 0.6 radian per radian per second in the aileron channel. The values would be easily usable with an autopilot having good performance. In the aileron channel the roll-rate gain was increased to 1.2 radians per radian per second for most runs. This increase was required to avoid an instability associated with control-surface limiting, which occurred during runs where the interceptor rolled through large angles. In a few runs the roll-rate gain of 2.2 radians per radian per second was required in order to eliminate this instability. The last value may be quite high with reference to its effect on the stability of the rate loop of an actual autopilot. As will be discussed subsquently, this large rate gain also produced a mild instability in the tracking loop when the system was operating in the linear range. This instability was caused by the relatively poorer linear response of the airplane-autopilot combination with the large rate gain.

For all conditions investigated the error gain settings K_ϵ of the autopilot were 0.1 radian per g for the elevator channel and 8 radians per radian for the aileron channel. Typical responses to unit step commands in roll angle and lift acceleration are shown in figure 5 for the various gain settings used in the analysis. In each case a comparison is made of the response with a perfect servo (assumed herein) and the response with a second-order servo having a natural frequency of 10 cycles per second and a damping ratio of 0.7. Although the stability of the airplane-autopilot combination is reduced somewhat with the second-order servo, the differences in response are not significant. Note that an error exists between the command value and steady-state value of lift acceleration. This steady-state error results from the lack of an integrating characteristic in the acceleration loop. This characteristic was not incorporated because of shortage of the required REAC components; however, since the acceleration command is controlled continuously from guidance signals to provide the proper acceleration output, the steady-state acceleration error cheifly reflects a reduction in the gain around the tracking loop which can be increased by other means.

Complete system.- A block diagram of the complete system used in this investigation is presented in figure 6 and a REAC wiring diagram is presented in figure 7. The equations solved by the REAC are presented in appendix C. Starting with the geometry computers for the xy- and xz-planes (see fig. 6), the fighter airspeed, the initial vertical steering error, and the fighter-bomber speed ratio are set as fixed values into these computers. The xy- and xz-components of bomber acceleration are programmed into these computers, as is the range which is approximated by the relation

$$R = R_o - V_F\left(1 - \frac{V_B}{V_F}\right)t$$

on the basis of the previously discussed assumption that $\sigma_{F_{xy}} + \sigma_{B_{xy}}$ and $\sigma_{F_{xz}} + \sigma_{B_{xz}}$ are small.

The xy- and xz-components of the interceptor acceleration are fed to the geometry computer from the outputs of the airplane-autopilot combination, and the geometry computer continuously solves equations (C8) and (C9) of appendix C to determine the steering errors. These errors are passed through the filters representing the radar and thence to the command computer, which solves equations (C12) and (C13) of appendix C to determine the basic bank-angle and lift-acceleration commands. In the case of lift acceleration the command computer also contains a signal modifier which affords the possibility of holding the acceleration command at a prescribed constant value for any prescribed range of

bank-angle errors and also affords the possibility of producing an acceleration command proportional to the normal component of the resultant steering error.

The acceleration and bank commands were fed to the autopilot to produce control deflections. Both the elevator and the aileron control deflections were limited to angles less than 0.25 radian. This value is referred to the deflection of one aileron. No control rate limiting or limiting of any other quantity was considered in the investigation. The control deflections from the limiters were used to determine the lift acceleration, pitching velocity, and roll-angle response of the interceptor. The roll-angle output was used to resolve the lift acceleration into its xz- and xy-components which were fed back into the geometry computer to close the tracking loop.

Range of variables investigated.- A basic set of initial conditions was assumed throughout most of the investigation. These conditions were: an interceptor airspeed of 1,650 feet per second, a bomber-fighter speed ratio of 4/5, and a range for the bomber maneuver of 5,000 feet. The direction of the bomber maneuvers was varied in a manner to require the interceptor to perform pull-ups, climbing turns, horizontal turns, diving turns, push-downs, and vertical-plane maneuvers of the split S type in order to follow. The bomber maneuver was defined solely in terms of the xy- and xz-components of its lift acceleration. This acceleration was applied as a step. A more refined variation of bomber acceleration was not considered necessary, since any desired assumption as to the time for acceleration buildup could be approximated simply by assuming the bomber maneuver to be initiated a short time before the step in acceleration was applied. The magnitude of the bomber acceleration generally corresponded to a 3g lift acceleration, the actual acceleration being the vector sum of the lift and gravitational accelerations. In some diving maneuvers the absolute bomber acceleration was -2g (lift plus gravitational acceleration). In order to investigate the effects of closing rate, some runs were made with a bomber-fighter speed ratio of 1/2, and, in order to investigate the effect a change in the range for the bomber maneuver, some runs were made with the bomber maneuvering at a range of 10,000 feet.

RESULTS AND DISCUSSION

General

Most of the investigation was concerned with maneuvers in which the interceptor was required to perform horizontal turning or split S type maneuvers since acceleration-bank coordination was felt to be most critical in maneuvers involving large amounts of rolling. No particular

consideration was given to the ability of the bomber successfully to perform the diving maneuvers considered herein; although with use of speed brakes they would appear feasible. Whether any of the bomber maneuvers are justified from a tactical standpoint also was not considered. Use of pull-ups and push-downs by the interceptor to follow vertical-plane maneuvers was investigated to establish what penalties were incurred when the interceptor was required to roll.

The Pull-Up Maneuver

Time histories of elevator deflection, lift acceleration, and steering error of the interceptor in following a bomber pull-up of 3g (lift acceleration) are presented in figure 8 for two values of bomber-fighter speed ratio and two bomber maneuvering ranges. The basic case of V_B/V_F of 4/5 and R_o of 5,000 feet is shown as the solid line. All the time histories approach steady values in an exponential fashion. There is a lightly damped oscillation superimposed as the general variation; however, this oscillation, which also appeared during all subsequent runs, is not regarded as significant in that its damping most probably could be materially improved by modifications not afforded with the available equipment. During the run the elevator control did not reach its limit and near the end of the run the interceptor acceleration approached a value about 1/2 g higher than that of the bomber. The steering error was ultimately increased by an increment of about 12 mils due to the bomber maneuver. Provision of integration in the tracking loop would have gradually reduced this error to zero so that the actual magnitude of the error may not be significant; however, it does serve as a basis for comparison with the errors generated in other types of maneuvers.

The effect of an increase in closing rate corresponding to a change in the speed ratio to 1/2 may be seen by reference to the long dashed line in figure 8. The result was to increase the steering-error and interceptor-acceleration variations as a function of time. The elevator also reached its limit; however, the limiting occurred at about the time that the range was closed and the run completed. At a speed ratio of 4/5, the range was closed at a rate of 330 feet per second; whereas, at a speed ratio of 1/2, this rate was 825 feet per second. Use of these values to change the time scale of figure 8 to a range scale shows that the variation of error as function of range is reduced at the higher closing rate.

The effect of initiation of the bomber maneuver at a greater range is also shown in figure 8. At a maneuvering range of 10,000 feet the errors at the lower closing rate are reduced as expected from those occurring at the shorter range; however, with a high closing rate at the longer range the steering errors increase steadily and would appear

ultimately to exceed values for the short-range cases. This result leads to the conclusion that, although the error variation as a function of range can be reduced for a time by use of higher closing rates for any given maneuvering range, the bomber can generate larger errors at any desired range when higher closing rates are used simply by initiating its maneuver at a greater range as the closing rate is increased.

Horizontal Turning Maneuvers

The point of primary interest in horizontal turns is the coordination of acceleration with bank angle. Of the many possibilities three types of coordination were investigated for this maneuver. In one case lift-acceleration commands proportional to the resultant steering error were applied immediately, regardless of any existing roll-angle error. In another, the lift acceleration was maintained at 1 g until the roll-angle errors had been reduced to a small value (about 5°). In the third case an attempt was made to get a more coordinated type of maneuver by applying a lift-acceleration command immediately but making it proportional to the normal component of the steering error.

A comparison of these three forms of coordination is presented in figure 9 for a speed ratio of 4/5 and a maneuvering range of 5,000 feet. For the interceptor assumed in the present analysis, the roll response was sufficiently rapid to enable the command in lift acceleration to be applied immediately without creating significant vertical errors due to lack of coordination during the roll. Whether the command was made proportional to the resultant steering error or its normal component was not important with regard to effects on steering-error variation, control deflection, or airplane response. Delaying the acceleration command until the airplane has rolled resulted in increased transient errors in both the vertical and horizontal planes. These transients were fairly rapidly checked, however. The larger oscillations for the case of the delayed acceleration command reflect the larger transients encountered in this case and the poor damping of the track loop of the system under study. The time histories of aileron deflection show that less than one-half of the total aileron deflection available (0.5 radian) was used during these maneuvers.

Also shown for comparison in figure 9 are comparable time histories of a pull-up maneuver. The magnitude of the resultant steering error is very slightly increased for the rolling maneuver as compared with the nonrolling maneuver. A slightly less favorable comparison would exist for the rolling case if an integrator had been present in the track loop to reduce the initial vertical error.

In general, the comments relative to the effects of increased closing rate and/or increased maneuvering range made for the pull-up

also apply to the horizontal turn and to the other maneuvers which were studied. The manner in which the lift acceleration is coordinated with bank angle is even less critical at the longer ranges.

The Split S Vertical Plane Maneuver

General.- Present airplane configurations are designed with greater maneuvering limits under positive acceleration than under negative acceleration. This characteristic in part results from recognition of the difference in the capabilities of a human pilot to withstand positive and negative acceleration in a seated position. In addition operating difficulties with engines and other equipment are often encountered under a sustained negative acceleration. Because of these considerations a human pilot may use negative accelerations for mild push-down maneuvers but beyond a point he will roll the airplane to the inverted position. The automatic interceptor may also be required to perform on some occasions the split S maneuver, and this maneuver would appear the most critical from the standpoint of coordinating acceleration with bank angle.

Effect of aileron limiting.- Prior to discussion of coordination, it is believed worth while to point out a control-system difficulty encountered during the study of split S maneuvers. It was found that, for the selected error gain, a rate-gain setting of 0.6 radian per radian per second produced a satisfactory transient response when the system was operating in its linear range. In maneuvers such as the split S, where large roll angle errors occur, the ailerons operate in a displacement-limited condition for an appreciable length of time and large rolling velocities are obtained. As the desired value of roll angle is approached, the ailerons reverse at a point determined by the rolling velocity and the values of the error gain and rate gain chosen for the system. The ability of the ailerons to reduce the rolling velocity is limited by the limits on aileron displacement, and for the gains chosen on the basis of linear operation the overshoot for a 180° bank command was large. In fact, a type of instability was found to occur in which the ailerons oscillate from stop to stop.

In order to reduce the initial overshoot, it is necessary for the ailerons to reverse sooner (at a larger value of roll angle error). This action was accomplished by increasing the rate gain of the system, and it was found necessary to provide roughly a three-fold increase in order to eliminate the overshoot and avoid the nonlinear type of instability. The value of rate gain found to be best was 2.2 radians per radian per second. Unfortunately, use of this high rate gain slowed the response of the roll control system to such an extent that a mild instability in roll occurred in the track loop under conditions of linear operation. Although this instability perhaps could have been

eliminated by addition of steering-error rate, this modification was not afforded by the equipment available. The instability was not believed to affect the evaluation of the various methods of coordination of acceleration and bank angle. Perhaps a dual-mode form of operation in which the rate gain is changed as some function of the roll-angle error might also be a way of overcoming the difficulties encountered.

At this point it may be mentioned that most of the results presented herein were obtained with a value of rate gain of 1.2 radians per radian per second. This value avoided the nonlinear type of instability mentioned previously for all conditions studied except that of the split S maneuver. The effect on the tracking characteristics of an increase in rate gain from 0.6 to 1.2 radians per radian per second was negligible.

Effect of acceleration-bank coordination.- Returning to the problem of acceleration-bank coordination in a split S maneuver, it is obvious that transient horizontal errors must occur unless the lift acceleration is maintained at zero while the interceptor is rolling. Time histories are presented in figure 10 of the variations in control displacements, lift acceleration, roll angle, and steering errors of the interceptor while undergoing a split S maneuver in which zero lift was held while rolling (whenever $\phi_\epsilon > 5^\circ$). Because of the presence of the vertical bias error in the system, the interceptor, in following the bomber maneuver, initially pushed down without rolling until a condition of zero g was obtained, at which time a roll command of 180° was applied. This command to the aileron channel of the autopilot caused the ailerons abruptly to deflect full right and then the high gain of the roll-rate signal caused the ailerons abruptly to deflect full left shortly after 90° of bank. By rolling at zero g, transient horizontal steering errors were avoided but the transient vertical errors that developed during this maneuver were extremely large. The rapid buildup in steering errors shown in figure 10 ultimately was checked, but the transient error was so large that the usefulness of this procedure in countering a bomber maneuver is doubtful. It was thought possible that some improvement could be made by holding zero g over a smaller part of the roll, for example, by applying the acceleration command when $\phi_\epsilon = 45^\circ$. An investigation of this possibility, however, revealed that any delay in application of the acceleration command resulted in larger transient errors than those obtained when the command was applied immediately.

The solid lines in figure 10 apply to the case where an acceleration command proportional to the resultant steering error is applied immediately. The airplane pushed down to zero g and then rolled. As the intercepter rolled through the first quadrant, its lift acceleration became increasingly more negative. At roughly 90° angle of bank the acceleration command abruptly changed from a negative to a positive command and the lift acceleration became increasingly more positive

while rolling through the second quadrant. In this manner there were always components of interceptor acceleration tending to reduce the vertical error and the vertical errors were thereby held to reasonable values while the airplane rolled. Because of the lack of coordination the interceptor while rolling through the first quadrant pulled to the left of the bomber and then while rolling through the second quadrant came back and pulled to the right of the bomber with the result that a fairly large horizontal steering error (about 10 mils) was generated near the end of the rolling maneuver. The gradual increase in the oscillation amplitude reflects the previously mentioned mild instability associated with the use of a very high rate gain in the roll channel of the autopilot. This instability probably could be eliminated in an actual system.

Immediate application of an acceleration command proportional to the normal component of the steering error afforded somewhat better coordination than was obtained in either of the previously described cases. The chief difference between this case and the case with commands proportional to the resultant steering error is that the acceleration command decreases and goes smoothly through zero as a 90° bank is approached. Thus the normal acceleration was maintained at a fairly low value in the region of 90° bank angle where it was ineffective in reducing the vertical errors and most effective in creating transient horizontal errors.

For comparison, the case wherein the interceptor does not roll but simply performs a push-down in following the target is also presented in figure 10. During this maneuver the interceptor acceleration steadies out at about -2.5g. Although this value is within the allowable limit for most fighter-type airplanes, it is large in terms of the values normally used by pilots and also in terms of a pilot's physical capabilities. A decrease in transient errors is evident when the interceptor was not required to roll, but the difference does not appear sufficiently great to rule out the possibility of successfully performing rolling maneuvers.

As mentioned previously the details of the bomber maneuvers are not considered herein; however any maneuver resulting in a downward lift acceleration of -3g might be regarded as rather taxing for a bomber to perform. In fact, bombers ordinarily are not designed to withstand negative accelerations of this magnitude, although a maneuver of this type possibly might be accomplished by rolling to an inverted position. Because of the foregoing considerations, a situation wherein the bomber sustained a lift acceleration of -1 g was also investigated. Although transient errors were reduced proportionately, the type of coordination chosen still had an important effect on the ability of the interceptor to track by using a rolling maneuver, and the same trends were evident as for the maneuver of figure 10.

Effect of airplane roll response.- The foregoing results appear to apply to the type of airplane investigated herein. This airplane on application of full aileron has a rolling acceleration of 4 radians per second per second and continues to accelerate in roll until extremely large values of roll angle are obtained. This type of rolling performance is usually attained with heavily loaded airplanes flying at high speeds and high altitude. A brief investigation of an airplane having the same initial rolling acceleration but which rapidly accelerates to a steady rolling velocity indicates that the effects of coordination are probably different. For this part of the study the transfer function chosen for the airplane (relating rolling velocity to aileron deflection) had a time constant of 1/2 second and the steady rate of roll for full aileron deflection was about 2 radians per second. Time histories of the steering errors, roll angle, normal acceleration, and control deflection are presented in figure 11 and apply to maneuvers where the acceleration command proportional to the normal component of the steering error is given immediately. As may be seen from the figure, because of lack of coordination a large horizontal error develops at about the same time that the vertical error is being checked. The direction of this horizontal error is such as to keep the interceptor rolling. As a result of similar effects a vertical error again develops as this horizontal error is reduced with the result that the airplane apparently rolls through a number of complete revolutions on a helical path about the desired mean trajectory.

Diving Turn Maneuver

A diving turn maneuver is one in which the interceptor rolls to a bank angle somewhat greater than 90° in order to track the bomber and serves to illustrate another important effect of airplane rolling performance on the ability to track through large rolling maneuvers. As may be seen from the time histories presented in figure 12, the interceptor was able to follow this maneuver satisfactorily for the basic conditions assumed herein. With the aileron effectiveness reduced to one-half the value assumed in previous examples, but with the autopilot gains increased to give the same linear response as before, a large overshoot and associated nonlinear type of instability previously described in connection with the split S maneuver was encountered. Even with the rate gain increased to more than 4 radians per radian per second (the highest available), the overshoot and attendant instability was not avoided and this high value of rate gain seriously reduced the linear response of the system. This result illustrates the need for good rolling performance of the interceptor. It might be noted that, with the aileron effectiveness assumed in most of the examples, the interceptor by use of full aileron deflection was capable of rolling through 90° in slightly under 1 second; whereas, with the effectiveness reduced to one-half, this time was increased by 40 percent.

Other Considerations Involved in Rolling Maneuvers

In order to summarize the effect that rolling has on the ability of the interceptor to track, the steering errors for five types of bomber maneuvers are presented in figure 13. All bomber maneuvers were at a lift acceleration of 3g and the maneuvers presented are a climb, a climbing turn at 45° to the vertical, a horizontal turn, a diving turn at 45° to the vertical, and a dive. The steering-error variations are presented in two ways, as the resultant steering error and as the resultant steering error with the initial vertical error subtracted from the vertical component. The latter variation approximates that which would occur for the system if the steady-state steering error had been reduced to zero by a very slow integration in the tracking loop. As may be seen from figure 13 the resultant steering error exhibits but little increase due to increase in the amount of rolling required; whereas the other form of the steering-error variations show a somewhat more pronounced effect. Therefore, if it were expected that the bomber would utilize equal magnitudes of lift acceleration in all types of maneuvers (climbs, dives, or turns), lack of integration might not be a detriment; however, if it were expected that the bomber would use an equal acceleration increment from 1 g flight (+3g in pull-ups and -1 g in push-downs), the presence of an integrator would definitely reduce the average steering errors.

Another effect of the presence of a small vertical bias error in steady tracking is that it automatically causes the interceptor to roll to the upright position whenever a bomber maneuver ceases and steady tracking is resumed. As pointed out previously, it also automatically avoids rolling in following a diving type of maneuver until negative normal acceleration is commanded. Another point of interest relates to the condition of roll indeterminacy, which occurs when the roll-angle commands are determined on the basis of steering-error components. With a steady-state bias error, the critical condition for the roll indeterminacy would occur when the bomber forced the interceptor to track in a free-fall (zero g) condition; whereas, with the bias error removed, the critical condition would occur in straight flight.

Maximum Rates of Roll, Control Motion, and Tracking-Line Motion

The simplifications made in the control system, in the commands, and in the geometry used in the present analysis dictate that any interpretation of the results in terms of the required dynamic characteristics of the control system, the radar-antenna drive system, or the interceptor be approached with caution. Some insight into the rate requirements of various parts of the system is nevertheless believed afforded by the results. The runs involving the split S maneuver were the most critical from the standpoint of taxing control system and

airplane performance (see fig. 13). In split S maneuvers the maximum roll rates developed were about 4 radians per second. This value of roll rate is believed about that at which a human pilot might lose his orientation. Although the foregoing statement is an indication that the interceptor studied herein could roll very rapidly, this roll performance was required in order effectively to counter target maneuvers. The maximum roll rate that could be obtained by the interceptor with full aileron deflection was about 12 radians per second. Such roll rates could be approached only by rolling the airplane through several complete revolutions. Thus, the maximum available roll rate for a high-altitude supersonic interceptor is not a good criterion of roll performance. The maximum rolling acceleration obtained was about 4 radians per second per second. This value does not differ greatly from those experienced in present airplanes and should not have any adverse effects on the human pilot.

The normal accelerations of the interceptor attained during the runs where tracking was satisfactory were only slightly greater than those of the bomber, the maximum being about 4g. This value of normal acceleration corresponds (at the interceptor speed) to a steady pitching velocity of about 0.08 radian per second. These results indicate that, if the maneuvering capabilities of a supersonic airplane were limited to lift accelerations of about 4g, the associated low pitch rate would not interfere with the ability of the interceptor to track, once tracking was established. Available pitch rates of this low magnitude might present a problem, however, in reducing vectoring errors at the beginning of an attack, particularly for high closing rates. Considerations of velocity reduction and perhaps of the magnitude of the angle of attack may very well restrict normal accelerations and pitch rates to values at or below those encountered in this investigation.

Since the servos were assumed to be perfect, the controls followed inputs to the servo without lag. Even in this case the elevator rates did not exceed 1 radian per second except in isolated instances where the acceleration command was discontinuous, and in these instances the need for higher rates than that quoted above was not apparent. Actually, the example interceptor had a greater positive static margin than was desirable. This static margin was dictated by the desirability of providing at least a small amount of static longitudinal stability at subsonic speeds. If the operating static margin could be reduced, the elevator control requirements could be relaxed further.

In the case of the ailerons, discontinuous commands also called for infinite control rates, but high rates were experienced for continuous commands. Even for horizontal turns where aileron displacements did not attain the limit, aileron rates greater than 2 radians per second were encountered during aileron operation to check the roll. When the ailerons operated under limiting conditions, still higher rates were

obtained during aileron reversal and high rates appeared necessary in order to prevent excessive overshoot of the bank angle.

Tracking-line rates were in all cases low. When good tracking was obtained, the values did not exceed 0.04 radian per second; and for cases of poor tracking, the values did not exceed 0.08 radian per second.

CONCLUDING REMARKS

From the study of coordination of lift acceleration and roll-angle commands in rolling maneuvers of an automatically controlled interceptor, the following conclusions were obtained. These conclusions apply to the bomber-fighter speed ratios investigated (4/5 and 1/2) and the investigated ranges for initiation of the evasive maneuver (5,000 ft and 10,000 ft).

1. In bomber maneuvers requiring a horizontal turn on the part of the interceptor, roll performance of the character expected for a supersonic interceptor was sufficient to enable lift-acceleration commands proportional to steering error to be applied immediately without creating significant transient errors. Smaller transient errors were obtained when the lift-acceleration command was applied immediately than when a lift acceleration of 1 g was maintained during rolling, but even in the later case the errors were rapidly checked.

2. For bomber diving maneuvers in which the interceptor used a maneuver of the split S type to follow the bomber, the success of the tracking was critical to the type of acceleration-bank coordination used. When the interceptor held zero g while rolling to avoid creating horizontal errors, excessively large vertical errors were created during the maneuver. When the acceleration commands were applied immediately, satisfactory tracking was obtained by using the split S maneuver, although transient horizontal errors existed. An acceleration command proportional to the normal component of the tracking error was found to result in the smallest transient errors, and with this type of command the interceptor could track with a split S maneuver nearly as well as with a push-down maneuver. These results were found to apply to bomber maneuvers for lift accelerations of both 1 g and 3g.

3. During large rolling maneuvers in which the ailerons reached their limit, very large roll-rate gains in the aileron channel were necessary in order to prevent overshooting of the bank angle and development of an instability in which the aileron oscillated from stop to stop. The large rate gains required to eliminate this instability seriously reduced the roll response under conditions of linear operation. A brief check on the aileron effectiveness revealed that when the aileron

effectiveness was reduced by one-half, elimination of this nonlinear roll instability was not possible.

4. The success of maneuvers involving rolling was dependent on the rolling characteristics of the interceptor. For example, immediate application of acceleration commands proportional to the normal component of the tracking error was successful for an airplane which on application of full aileron deflection had a rolling acceleration of 4 radians per second per second and continued to accelerate in roll to very large values of rolling velocity (12 radians per second) but did not appear satisfactory for an airplane which had the same initial rolling acceleration but rapidly attained a low steady rolling velocity (2 radians per second).

5. High roll rates (4 radians per second) and low pitch rates (0.08 radian per second) were experienced during the investigation. Similarly high aileron rates (greater than 2 radians per second) but only moderate elevator rates (less than 1 radian per second) appeared necessary for successful tracking.

6. Only the relative positions and motions of bomber and interceptor were found to be needed for computation of commands to the autopilot and neglect of gravitational effects in the computation of commands would not appear to affect the success of the attack significantly.

7. In general, acceleration-bank coordination was less critical at the larger ranges and at the lower closing rates.

Langley Aeronautical Laboratory,
National Advisory Committee for Aeronautics,
Langley Field, Va., May 27, 1954.

APPENDIX A

COMPARISON OF A BEAM COLLISION ATTACK AND A TAIL-CHASE PURSUIT ATTACK AS TO EFFECTIVENESS OF A BOMBER VERTICAL-PLANE MANEUVER

The comparative effectiveness of a vertical-plane maneuver in countering a collision attack from abeam and in countering a pursuit attack from astern may be established by inspection of the steering equations for these two types of attack. The steering command for the pursuit case is given by equation (11) of the main body of this paper. The steering command for the beam collision case is developed in this appendix.

Consider a beam attack in which the interceptor has established a collision course prior to a vertical-plane evasive maneuver on the part of the bomber. A system of axes is chosen with the origin at the position of the interceptor. The z'-axis is vertical; the x'-axis is along the projection of the interceptor's path in the horizontal plane; and the y'-axis is orthogonal with the other two. At any instant during the bomber maneuver, the predicted vertical miss (with linear prediction), as may be seen by reference to figure 14, is given by

$$m_V = R \sin \epsilon + V_B T \sin \gamma_B - V_F T \sin \gamma_F \tag{A1}$$

The component of miss perpendicular to the path of the interceptor is given by

$$m_P = (R \sin \epsilon + V_B T \sin \gamma_B - V_F T \sin \gamma_F) \cos \gamma_F \tag{A2}$$

Ordinarily, the angles in the foregoing relation are very small and with this assumption the following relations apply:

$$V_B \sin \gamma_B = V_B \gamma_B = \frac{a_{B_{xz}}}{p}$$

$$V_F \sin \gamma_F = V_F \gamma_F = \frac{a_{F_{xz}}}{p}$$

If the airplanes were initially at the same altitude, m_P would be approximated by

$$m_P = T\left(\frac{a_{B_{xz}}}{p} - \frac{a_{F_{xz}}}{p}\right) \tag{A3}$$

The angular error would be (see fig. 14)

$$\sigma_{F_{xz}} = \frac{m_P}{V_F T} = \frac{a_{B_{xz}} - a_{F_{xz}}}{pV_F} \tag{A4}$$

The steering command is usually made proportional to this error. For comparison, the steering command for the pursuit case is written (with $\sigma_{F_{xz_0}} = 0$) as follows:

$$\sigma_{F_{xz}} = \frac{\frac{a_{B_{xz}}}{p} - \frac{Ra_{F_{xz}}}{V_F} - \frac{V_B}{V_F}\frac{a_{F_{xz}}}{p}}{Rp + V_F\left(\frac{V_B}{V_F} - 1\right)} \tag{A5}$$

One basis of comparison of the two modes of attack is to consider the instantaneous accelerations of the interceptor required to hold the steering error zero under a given bomber acceleration. These relations between the fighter acceleration and the bomber acceleration may be obtained by setting $\sigma_{F_{xz}}$ equal to zero in equations (A4) and (A5).

For the collision attack:

$$a_{F_{xz}} = a_{B_{xz}}$$

For the pursuit attack:

$$a_{F_{xz}} = \frac{\frac{V_F}{V_B} a_{B_{xz}}}{1 + \frac{R}{V_B} p}$$

[redacted]

In the beam collision attack the fighter acceleration must match that of the bomber, while in the tail-chase pursuit attack the fighter acceleration in the steady state must be somewhat greater than that of the bomber but at usual ranges only a slow exponential buildup to this acceleration would be required (the time constant being R/V_B).

Another basis for comparison of the two attacks is the rate of buildup of the steering error resulting from a bomber maneuver that is not countered by the interceptor. The relation between the rate of change of steering error and the bomber acceleration may be obtained by setting $a_{F_{xz}}$ equal to zero in equations (A4) and (A5).

For the collision attack:

$$p\sigma_{F_{xz}} = \frac{a_{B_{xz}}}{V_F}$$

For the pursuit attack:

$$p\sigma_{F_{xz}} = \frac{a_{B_{xz}}}{(V_B - V_F)}\left[\frac{1}{1 + \frac{Rp}{V_B - V_F}}\right]$$

Thus, for the beam collision attack, the rate of change of steering error when the bomber maneuver is not countered is directly proportional to the bomber acceleration and inversely proportional to the interceptor speed. For the pursuit attack at moderate range, the angular acceleration of the steering error will be directly proportional to the bomber acceleration and inversely proportional to the range. For the pursuit attack at short range, the rate of change of steering error will be directly proportional to the bomber acceleration and inversely proportional to the rate of closure.

APPENDIX B

SIMPLIFICATION OF TRIGONOMETRIC FUNCTIONS INVOLVED IN THE ATTACK GEOMETRY

The relation between the xy- and xz-components of the range and the resultant range as well as the xy- and xz-components of the bomber velocity and the resultant velocity are examined herein in order to justify certain simplifications made in the main body of this paper. Reference to figure 1 will show that the following range relations exist:

$$R_{xy} = R \cos \xi \tag{B1}$$

$$R_{xz} = \frac{R \cos \xi \cos \sigma_{F_{xy}}}{\cos \sigma_{F_{xz}}} \tag{B2}$$

where

$$\tan \xi = \tan \sigma_{F_{xz}} \cos \sigma_{F_{xy}}$$

The steering errors $\sigma_{F_{xz}}$ and $\sigma_{F_{xy}}$ are the angles which the interceptor-control system is attempting to regulate to zero. In order for a run to be successful, these angles must be held to very small values (preferably just a few mils). In view of this requirement, it was thought that runs in which these angles exceeded 50 mils would not be of interest. With this limit in mind, $\cos \xi$, $\cos \sigma_{F_{xy}}$, and $\cos \sigma_{F_{xz}}$ will be within approximately one-tenth of a percent of unity and therefore

$$R_{xy} \approx R_{xz} \approx R$$

The relations between V_B and its components $V_{B_{xy}}$ and $V_{B_{xz}}$ may also be seen from figure 1 to be

$$V_{B_{xy}} = V_B \cos \zeta \tag{B3}$$

$$V_{B_{xz}} = \frac{V \cos \zeta \cos\left(\sigma_{F_{xy}} + \sigma_{B_{xy}}\right)}{\cos\left(\sigma_{F_{xz}} + \sigma_{B_{xz}}\right)} \tag{B4}$$

where

$$\tan \zeta = \tan\left(\sigma_{F_{xz}} + \sigma_{B_{xz}}\right)\cos\left(\sigma_{F_{xy}} + \sigma_{B_{xy}}\right)$$

In view of the small values of $\sigma_{F_{xy}}$ and $\sigma_{F_{xz}}$ of interest, the relations between V_B, $V_{B_{xy}}$, and $V_{B_{xz}}$ are effectively determined by trigonometric functions of $\sigma_{B_{xy}}$ and $\sigma_{B_{xz}}$. An examination of perfect pursuit trajectories revealed that, for the magnitude of bomber acceleration considered herein, the angles $\sigma_{B_{xy}}$ and $\sigma_{B_{xz}}$ do not exceed 400 mils for all runs wherein the bomber initiated a maneuver at a range of 5,000 feet, the value used in most examples. Since $\cos \zeta$, $\cos\left(\sigma_{F_{xy}} + \sigma_{B_{xy}}\right)$, and $\cos\left(\sigma_{F_{xz}} + \sigma_{B_{xz}}\right)$ under these conditions would remain within 10 percent of unity the simplification of assuming that $V_{B_{xz}} \approx V_{B_{xy}} \approx V_B$ was believed to be justified. The foregoing considerations would also appear to justify the use of $\sigma_{F_{xy}} = \sin \sigma_{F_{xy}}$ and $\sigma_{F_{xz}} = \sin \sigma_{F_{xz}}$ in equation (2) of the main body of this paper. For the examples wherein the bomber initiated maneuvers at a range of 10,000 feet, either $\sigma_{B_{xz}}$ or $\sigma_{B_{xy}}$ generally exceed 400 mils in about 10 seconds and only portions of runs prior to this time are presented herein.

APPENDIX C

EQUATIONS SOLVED ON REAC

$$\delta_e = K_{\epsilon_a}\left(a_{F_i} - a_F\right) - K_{\dot{\theta}}\dot{\theta}_F \tag{C1}$$

$$\delta_a = K_{\epsilon_\phi}\left(\phi_{F_i} - \phi_F\right) - K_{\dot{\phi}}\dot{\phi}_F \tag{C2}$$

$$Ap^2a_F + Bpa_F + Ca_F = Dp^2\delta_e + E\delta_e \tag{C3}$$

$$Ap^2\dot{\theta}_F + Bp\dot{\theta}_F + C\dot{\theta}_F = Ip\delta_e + J\delta_e \tag{C4}$$

$$Gp^2\phi_F + Hp\phi_F = F\delta_a \tag{C5}$$

$$a_{F_{xy}} = a_F \sin \phi_F \tag{C6}$$

$$a_{F_{xz}} = a_F \cos \phi_F \tag{C7}$$

$$Rp\sigma_{F_{xy}} + V_F\left(\frac{V_B}{V_F} - 1\right)\sigma_{F_{xy}} = \frac{a_{B_{xy}}}{p} - \frac{R}{V_F}\,a_{F_{xy}} - \frac{V_B}{V_F}\,\frac{a_{F_{xy}}}{p} \tag{C8}$$

$$Rp\sigma_{F_{xz}} + V_F\left(\frac{V_B}{V_F} - 1\right)\sigma_{F_{xz}} = \frac{a_{B_{xz}}}{p} - \frac{R}{V_F}\,a_{F_{xz}} - \frac{V_B}{V_F}\,\frac{a_{F_{xz}}}{p} + V_F\sigma_{F_{xz_0}} \tag{C9}$$

$$\tau p\bar{\sigma}_{F_{xy}} + \bar{\sigma}_{F_{xy}} = \sigma_{F_{xy}} \tag{C10}$$

$$\tau p\bar{\sigma}_{F_{xz}} + \bar{\sigma}_{F_{xz}} = \sigma_{F_{xz}} \tag{C11}$$

$$a_{F_i} = K_\sigma f(\phi_F) \sqrt{\bar{\sigma}_{F_{xy}}{}^2 + \bar{\sigma}_{F_{xz}}{}^2} \tag{C12}$$

$$\phi_{F_i} = \tan^{-1}\left(\frac{\bar{\sigma}_{F_{xy}}}{\bar{\sigma}_{F_{xz}}}\right) \tag{C13}$$

REFERENCES

1. Behlmann, F. Lee: F2H-3 Automatic-Fire-Control System Design Progress Report No. 3 for Period Ending 31 May 1952. Rep. No. 2621 (Contract NOa(s)-51-023, MCR-31), McDonnell Aircraft Corp., June 1, 1952.

2. Anon.: Armament Control System Aero 11A. Rep. No. EM-330-2 (Contract No. NOas 52-222-c), North American Aviation, Inc., May 1, 1953.

3. Moulton, Bernard W., and Tazewell, John P.: Cross-Roll Errors and Techniques of Correction. Rep. No. R-21, Instrumentation Lab., M.I.T., 1951.

4. James, Hubert M., Nichols, Nathaniel B., and Phillips, Ralph S.: Theory of Servomechanisms. McGraw-Hill Book Co., Inc., 1947.

5. Mitcham, Grady L., Crabill, Norman L., and Stevens, Joseph E.: Flight Determination of the Drag and Longitudinal Stability and Control Characteristics of a Rocket-Powered Model of a 60° Delta-Wing Airplane From Mach Numbers of 0.75 to 1.70. NACA RM L51I04, 1951.

6. Sandahl, Carl A., and Strass, H. Kurt: Comparative Tests of the Rolling Effectiveness of Constant-Chord, Full-Delta, and Half-Delta Ailerons on Delta Wings at Transonic and Supersonic Speeds. NACA RM L9J26, 1949.

7. Phillips, William H.: Effect of Steady Rolling on Longitudinal and Directional Stability. NACA TN 1627, 1948.

TABLE I

AIRPLANE PHYSICAL CHARACTERISTICS, AIRPLANE STABILITY

DERIVATIVES, AND FLIGHT CONDITIONS

W, lb	24,000
I_y, slug-ft^2	79,000
I_x, slug-ft^2	45,500
S, sq ft	600
b, ft	37.2
$\bar{c}$, ft	21.5
h, ft	50,000
ρ, slugs/cu ft	0.000361
M	1.7
V, ft/sec	1,650
q, lb/sq ft	490
C_{L_α}, per radian	2.24
C_{L_δ}, per radian	0.315
C_{m_α}, per radian	-0.365
C_{m_δ}, per radian	-0.254
$C_{m_q} + C_{m_{D\alpha}}$, per radian	-1.2
C_{l_δ}, per radian	0.06
C_{l_p}, per radian	-0.11

TABLE II

TRANSFER COEFFICIENTS OF EXAMPLE AIRPLANE

Symbol	Expression	Value
A	$8\left(\mu_{\bar{c}} \frac{\bar{c}}{V_F} k_y\right)^2$	8.0
B	$2\mu_{\bar{c}} \frac{\bar{c}}{V_F}\left(2k_y{}^2 C_{L_\alpha} - C_{m_{\dot{q}}} - C_{m_{D\alpha}}\right)$	9.3
C	$-4\mu_{\bar{c}} C_{m_\alpha}$	235
D	$-4 \frac{\bar{c}}{g} \mu_{\bar{c}} k_y{}^2 C_{L_{\delta_e}}$	-31.0
E	$\frac{2V_F{}^2}{g\bar{c}}\left(C_{m_\alpha} C_{L_{\delta_e}} - C_{L_\alpha} C_{m_{\delta_e}}\right)$	3650
F	$C_{l_{\delta_a}}$	0.06
G	$2\mu_b\left(k_x \frac{b}{V_F}\right)^2$	0.004
H	$-\frac{1}{2} C_{l_p} \frac{b}{V_F}$	0.0012
I	$C_{m_{D\alpha}} C_{L_{\delta_e}} - 4\mu_{\bar{c}} C_{m_{\delta_e}}$	162
J	$2 \frac{V}{\bar{c}}\left(C_{m_\alpha} C_{L_{\delta_e}} - C_{L_\alpha} C_{m_{\delta_e}}\right)$	71

$$\frac{a_F}{\delta_e} = \frac{Dp^2 + E}{Ap^2 + Bp + C}$$

$$\frac{\phi_F}{\delta_a} = \frac{F}{p(Gp + H)}$$

$$\frac{\dot{\theta}_F}{\delta_e} = \frac{Ip + J}{Ap^2 + Bp + C}$$

[redacted]

[redacted]

CONFIDENTIAL

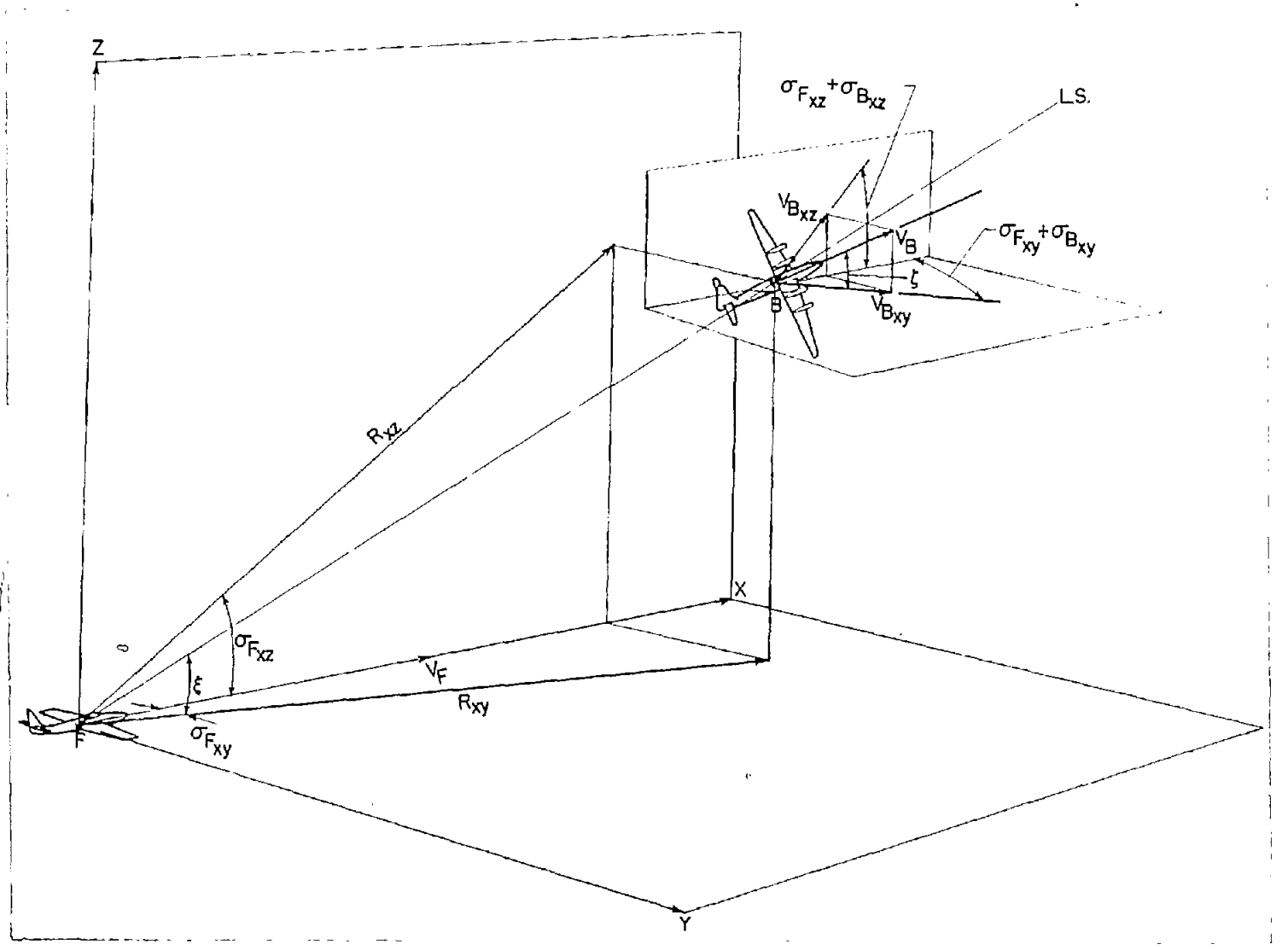

L-83684

Figure 1.- Geometry of attack situation.

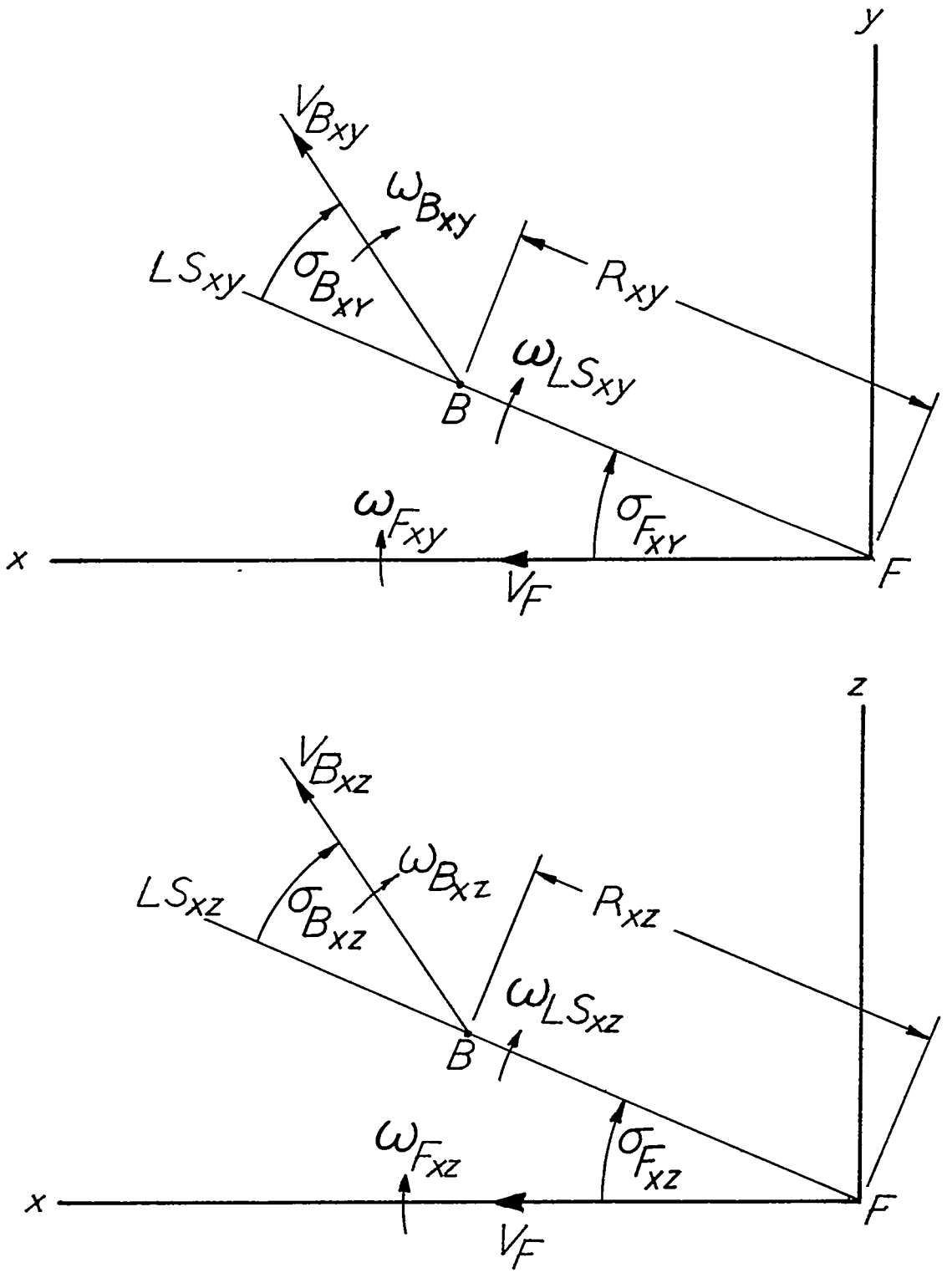

Figure 2.- System of axis and sign convention. Arrows indicate positive directions of vectors, angles, and angular velocities.

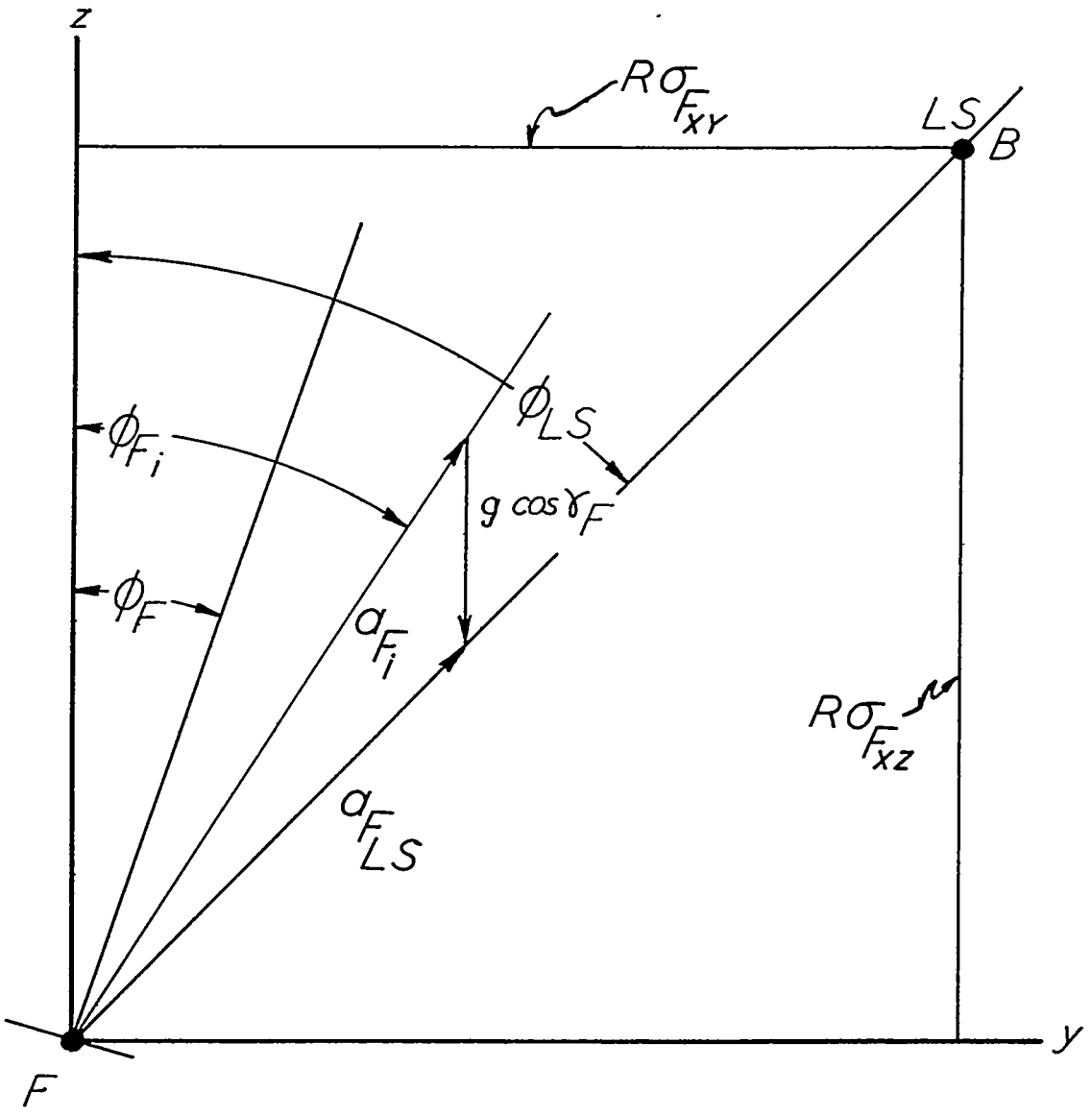

Figure 3.- Relationship required between the angle of bank input signal and other variables to place the fighter resultant acceleration in the plane containing the interceptor's path and the line of sight.

[redacted]

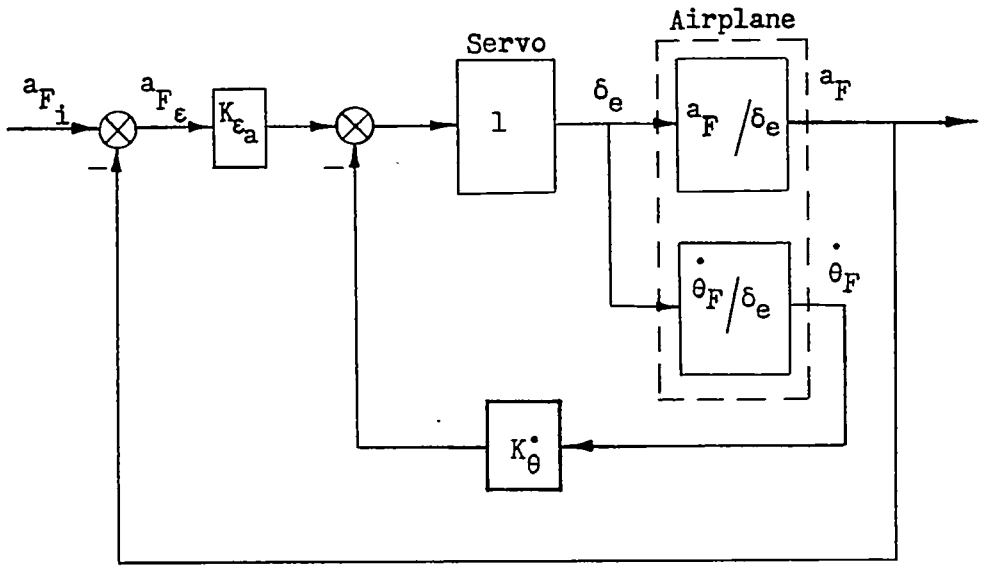

(a) Lift-acceleration channel.

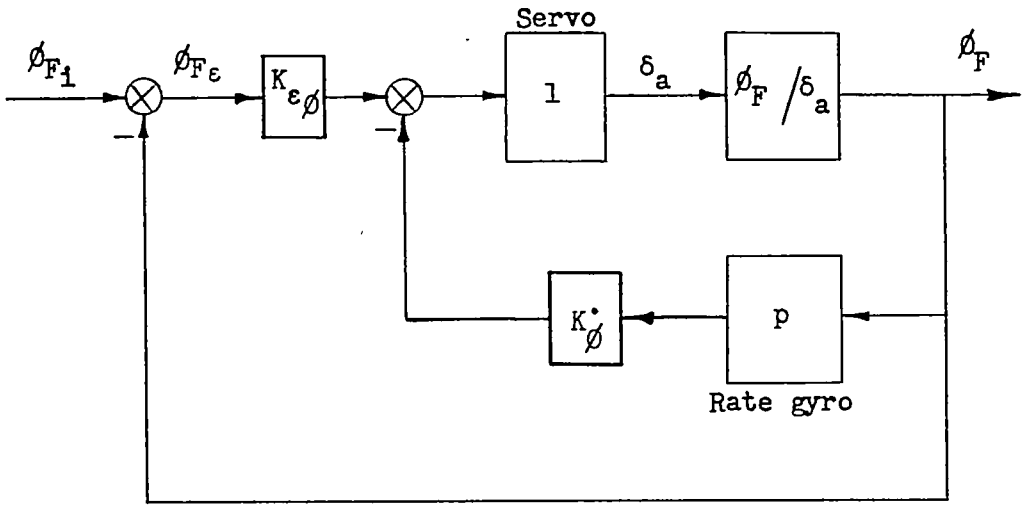

(b) Roll-attitude channel.

Figure 4.- Block diagram of autopilot channels of interceptor.

CONFIDENTIAL

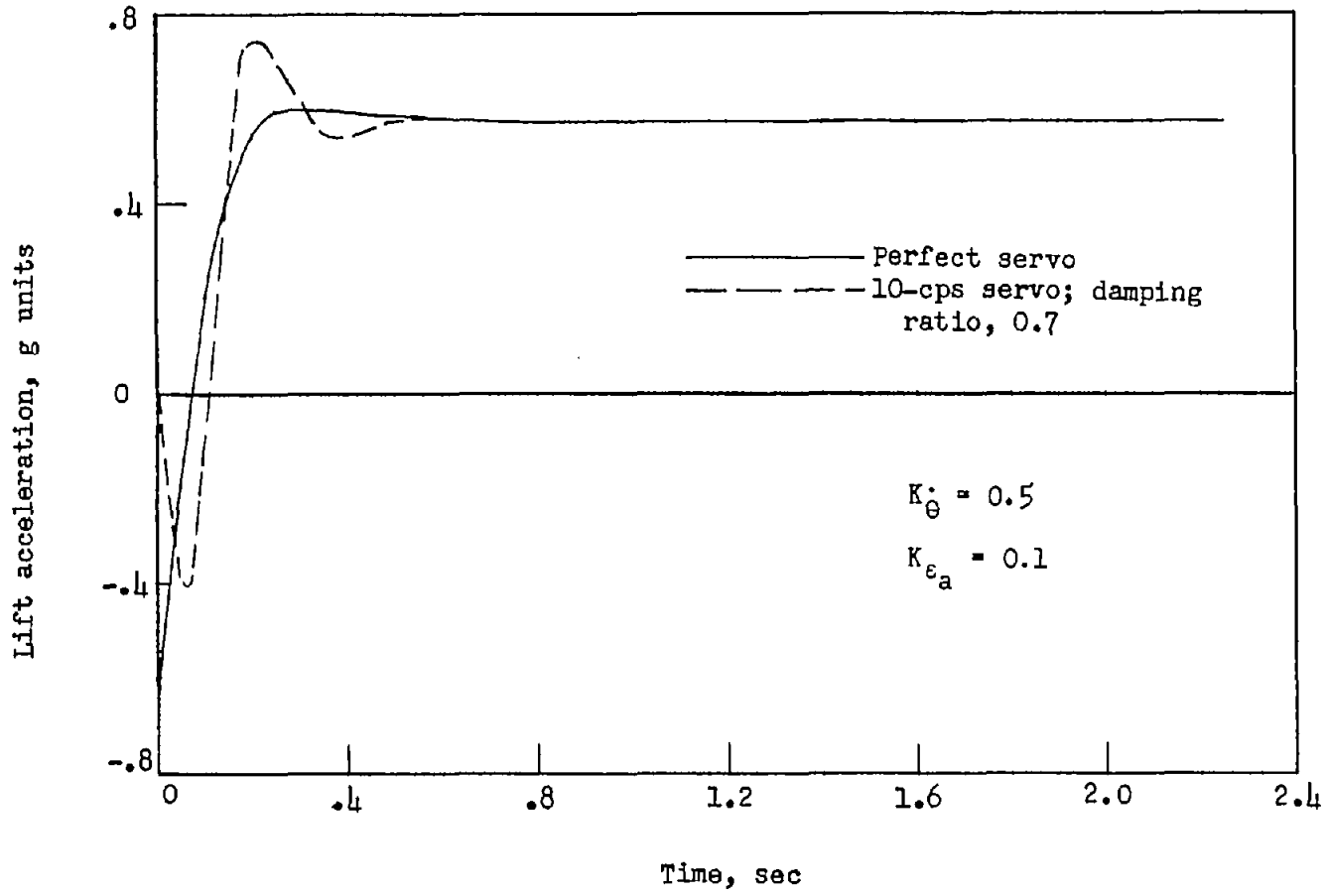

(a) Lift acceleration.

Figure 5.- Time histories of response of airplane-autopilot combination to a unit step input comparing the response obtained from a perfect servo with that obtained from a servo with typical lag.

CONFIDENTIAL

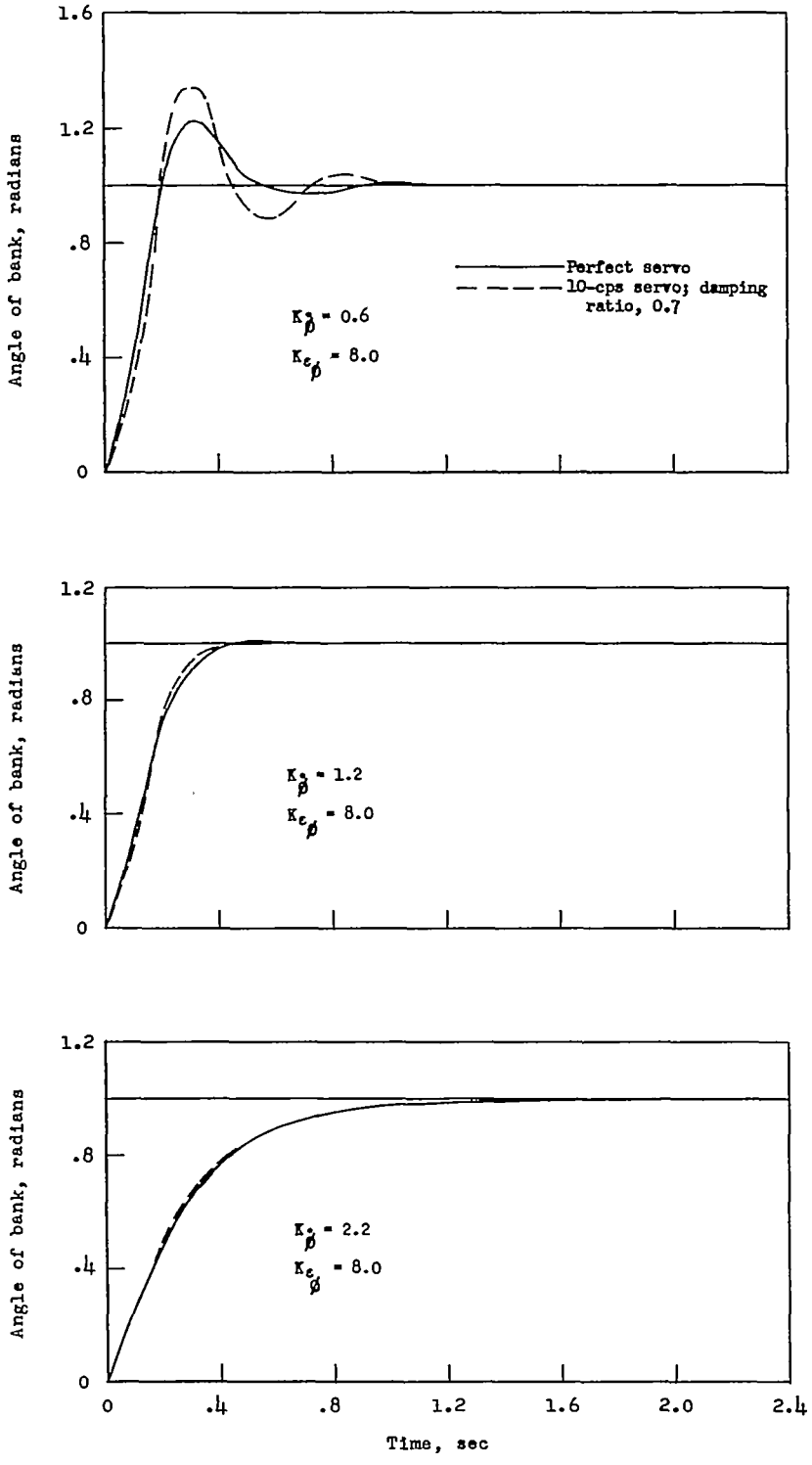

(b) Angle of bank.

Figure 5.- Concluded.

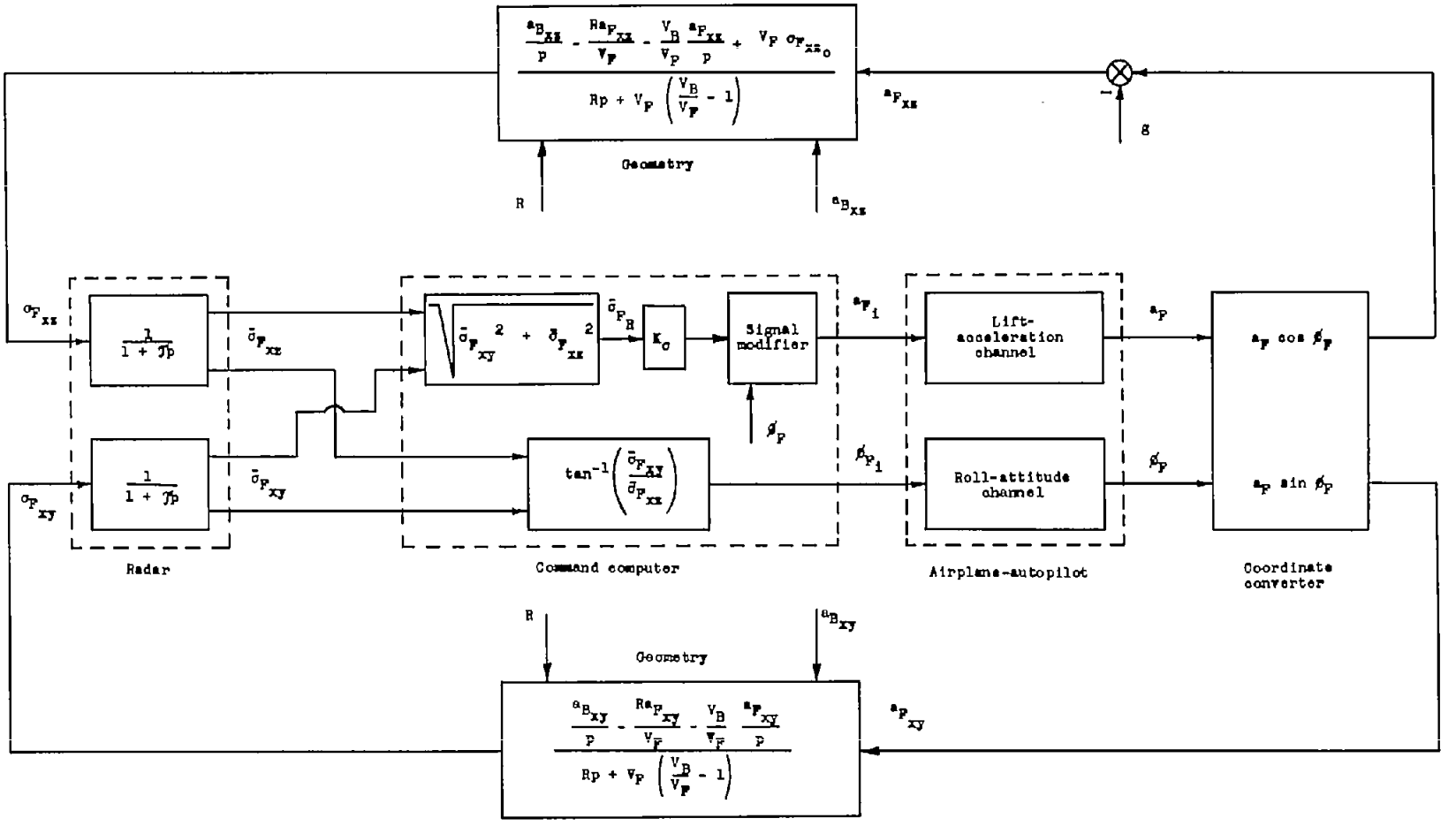

Figure 6.- Block diagram of interceptor attack situation.

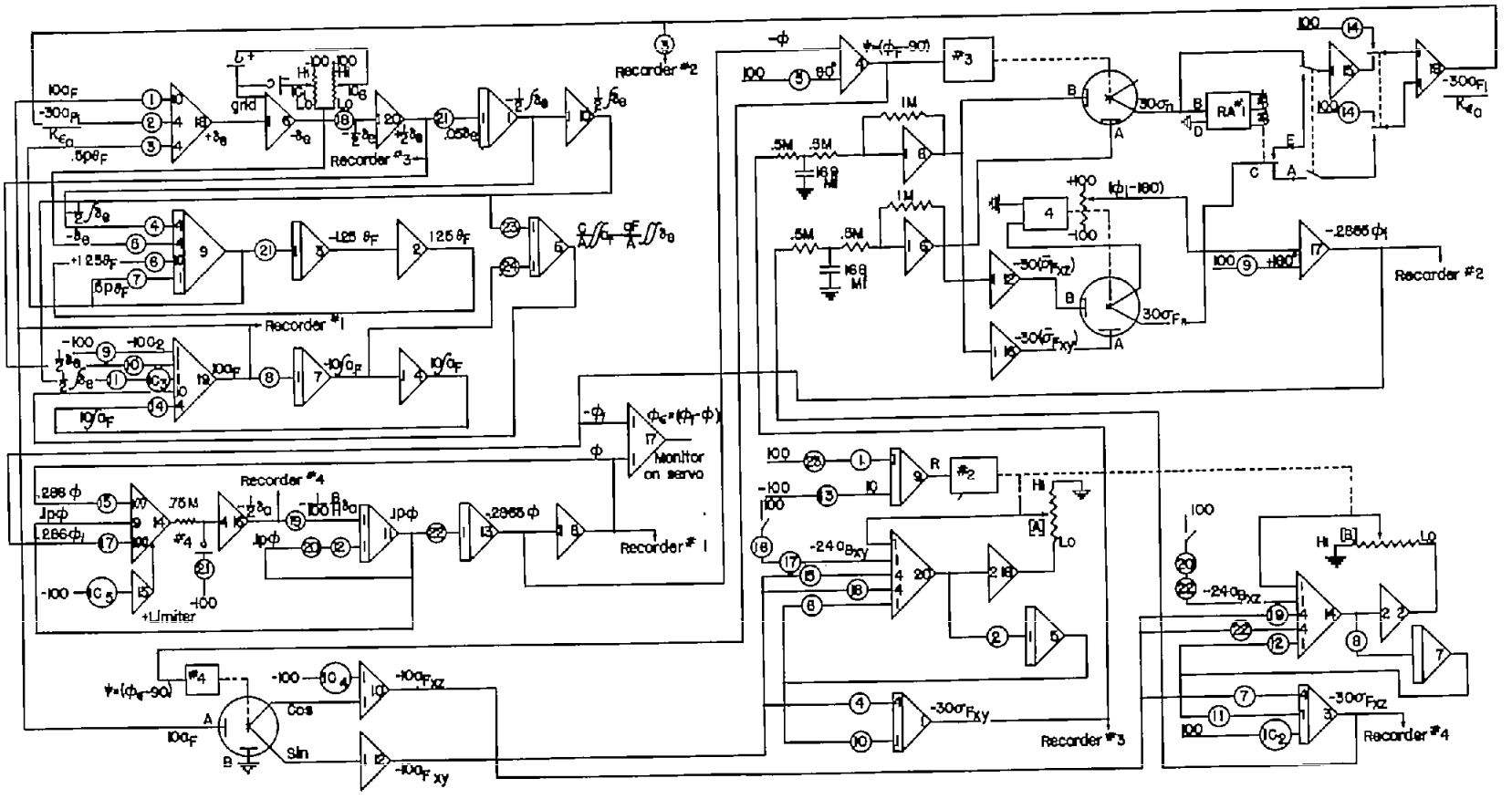

Figure 7.- REAC wiring diagram of interceptor-attack study.

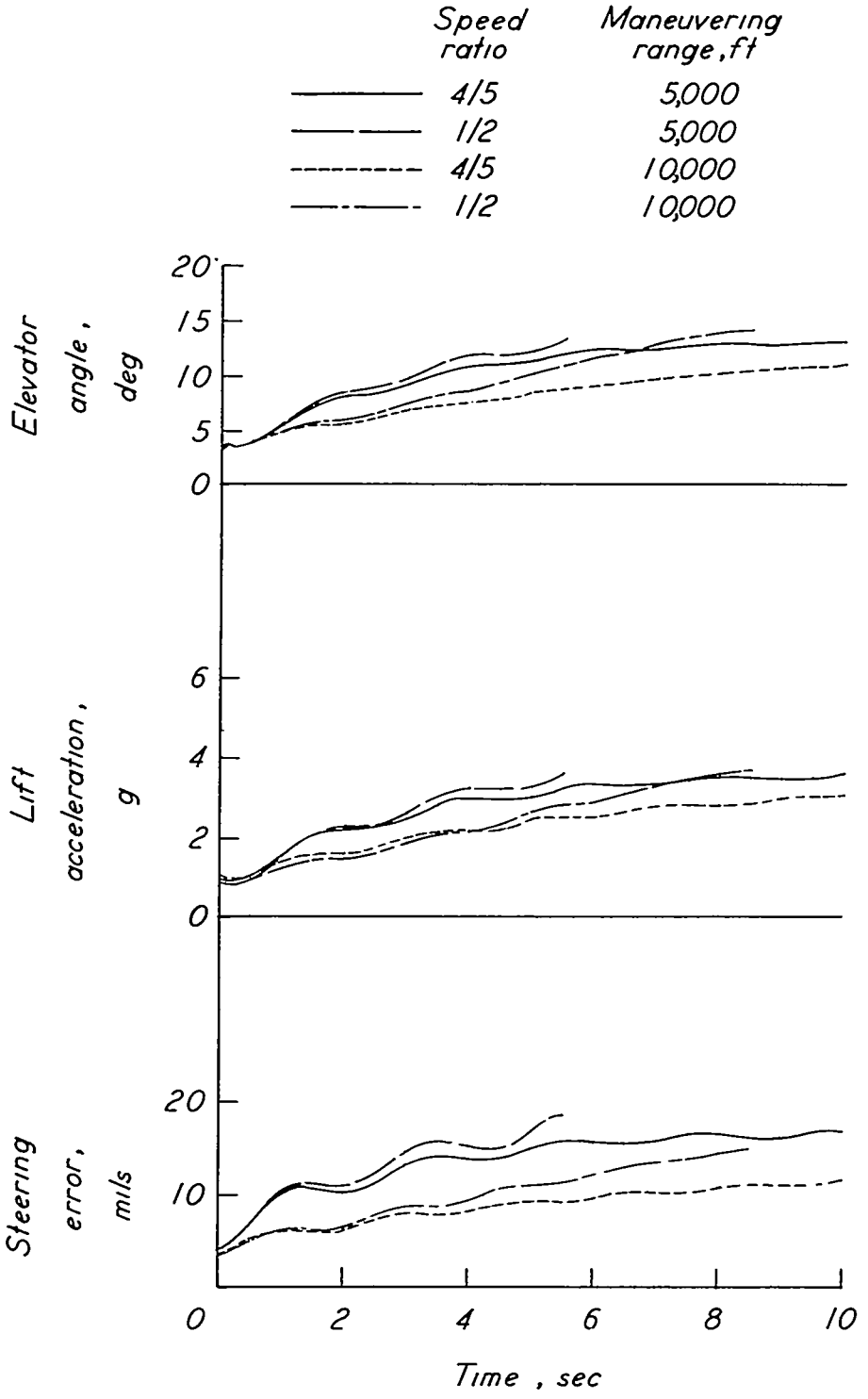

Figure 8.- Time histories of vertical steering error, lift acceleration, and elevator deflection of an interceptor in following a bomber pull-up maneuver of 3g lift acceleration.

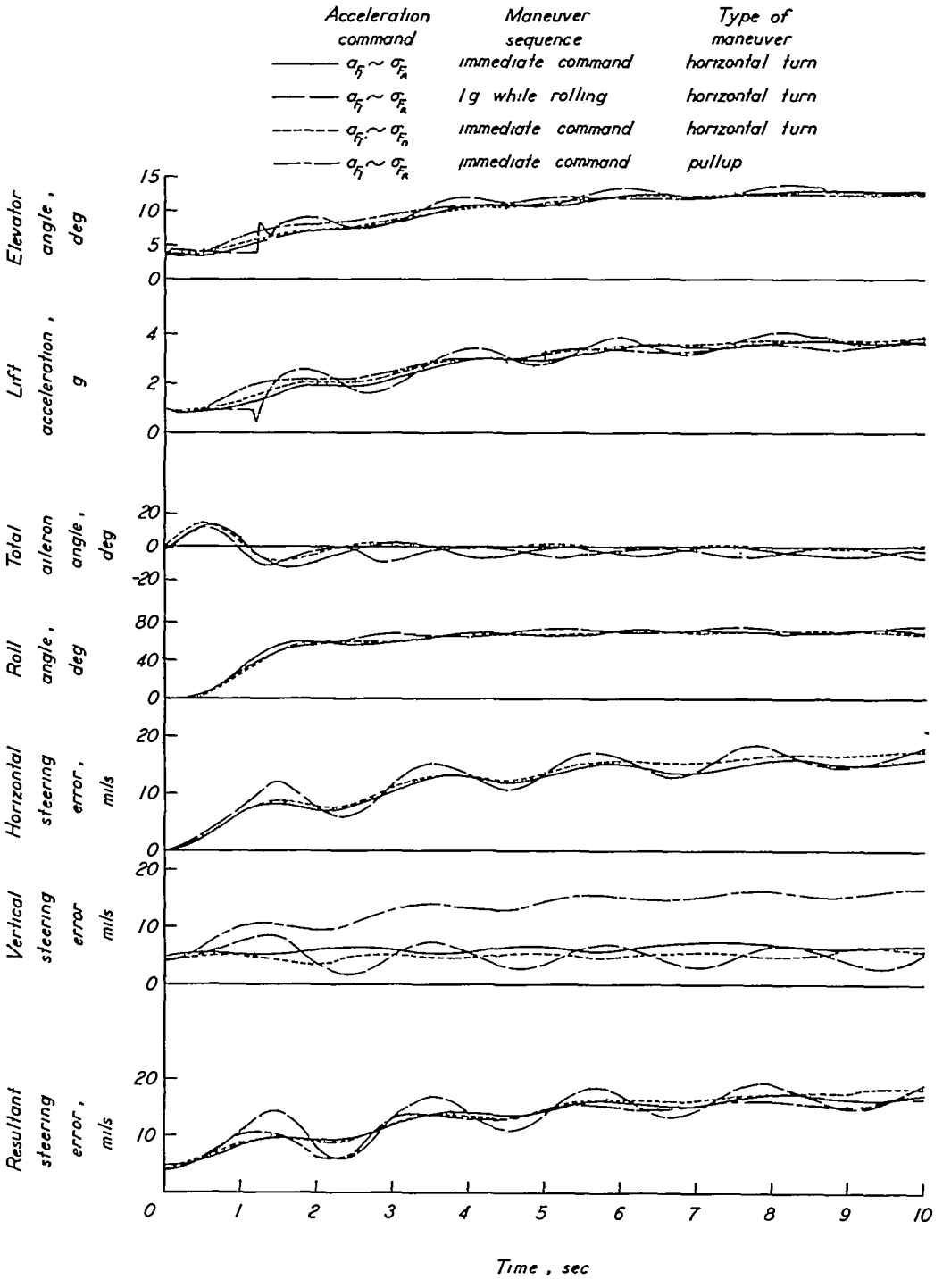

Figure 9.- Time histories of horizontal, vertical, and resultant steering error and of roll angle, lift acceleration, and elevator and aileron deflection of an interceptor in following a bomber horizontal turning maneuver of 3g lift acceleration. Maneuver range, 5,000 feet; interceptor velocity, 1,650 feet per second; closing rate, 330 feet per second.

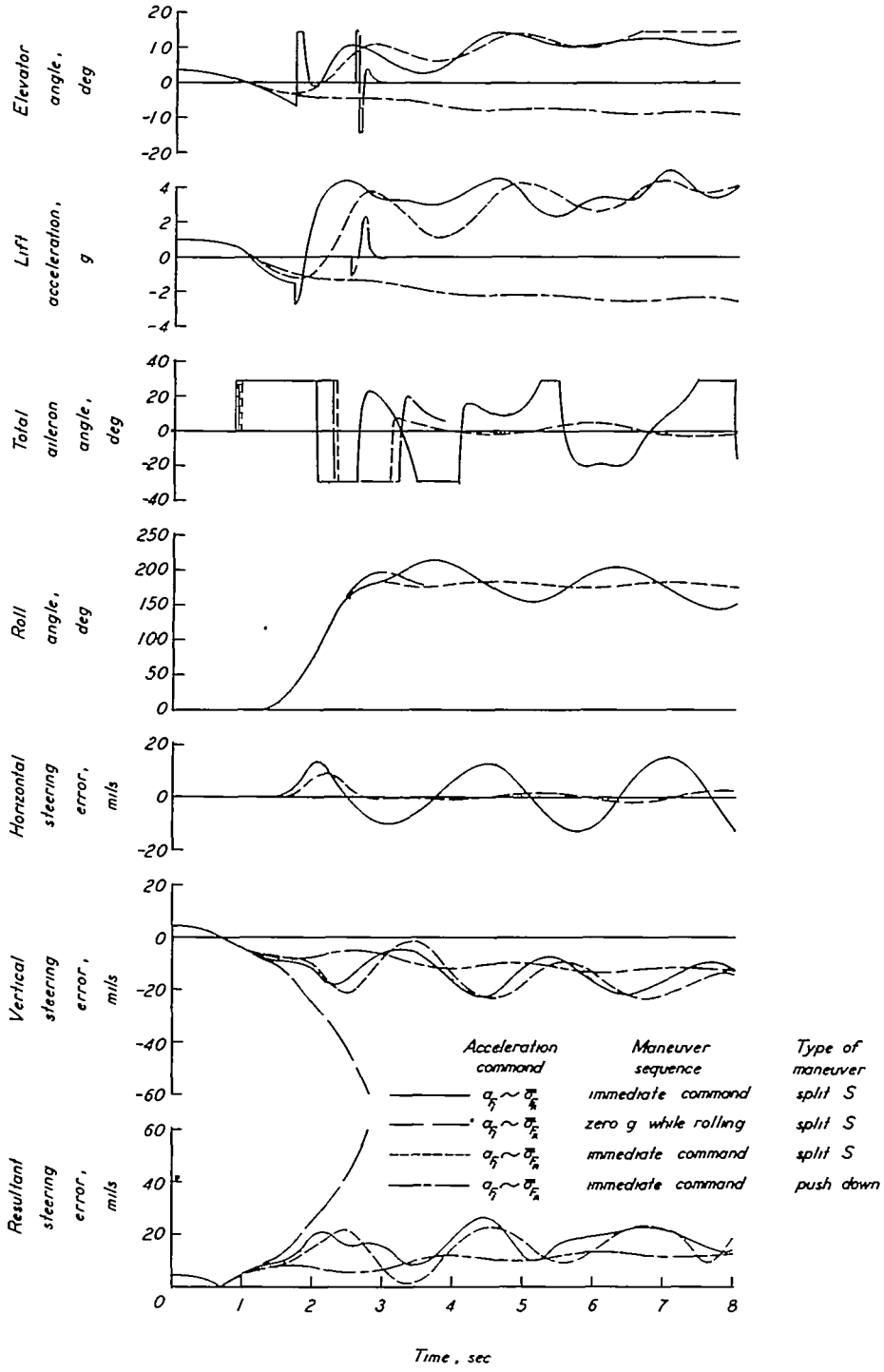

Figure 10.- Time histories of horizontal, vertical, and resultant steering error and of roll angle, lift acceleration, and elevator and aileron deflection of an interceptor in following a bomber diving maneuver of 3g lift acceleration. Maneuver range, 5,000 feet; interceptor velocity, 1,650 feet per second; closing rate, 330 feet per second.

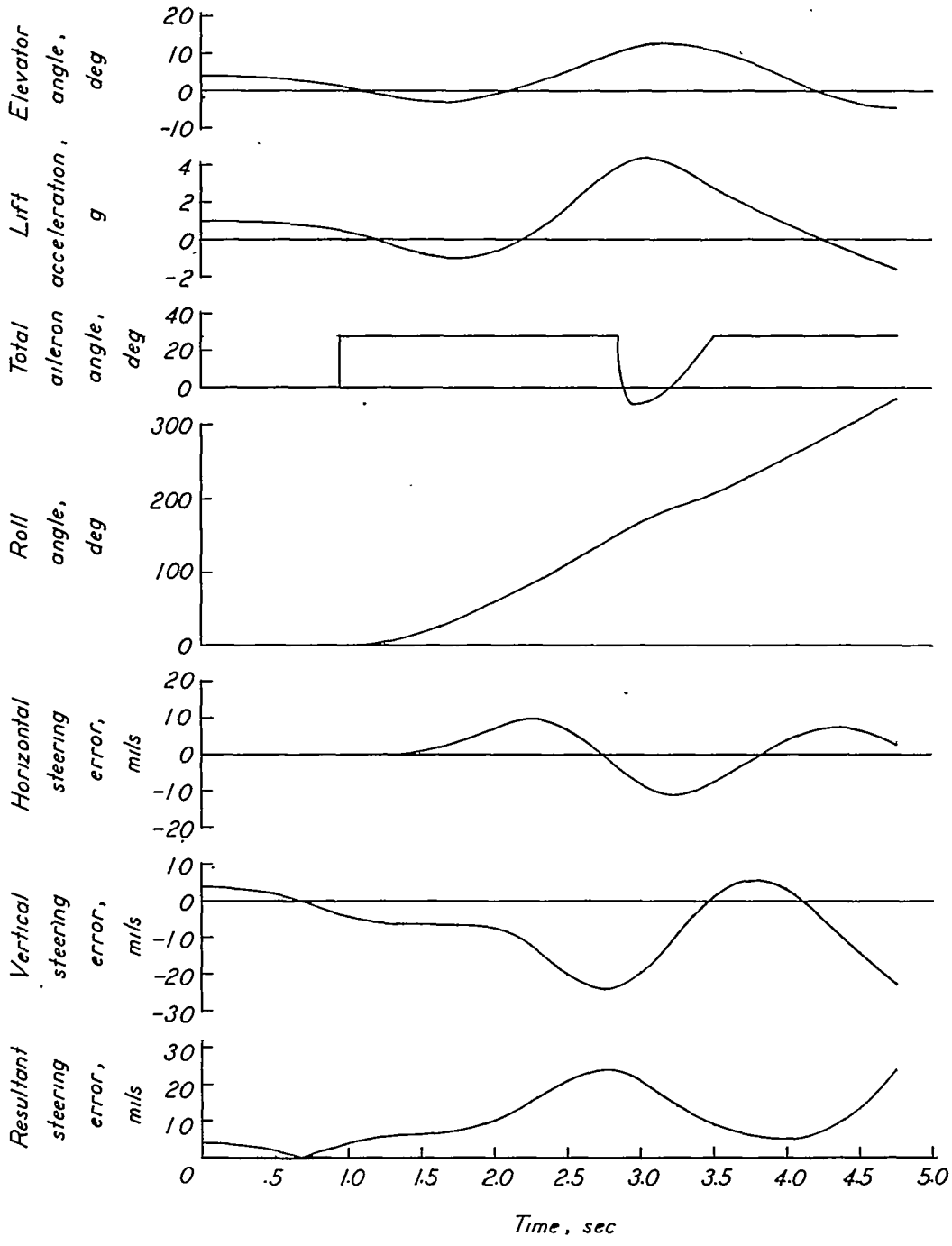

Figure 11.- Time histories of horizontal, vertical, and resultant steering errors and of roll angle, lift acceleration, and elevator and aileron angle of an interceptor in following a bomber diving maneuver of 3g lift acceleration through use of a split S. Interceptor has moderately low roll rate performance but accelerates rapidly to a steady rolling velocity. Maneuver range, 5,000 feet; interceptor velocity, 1,650 feet per second; closing rate, 330 feet per second.

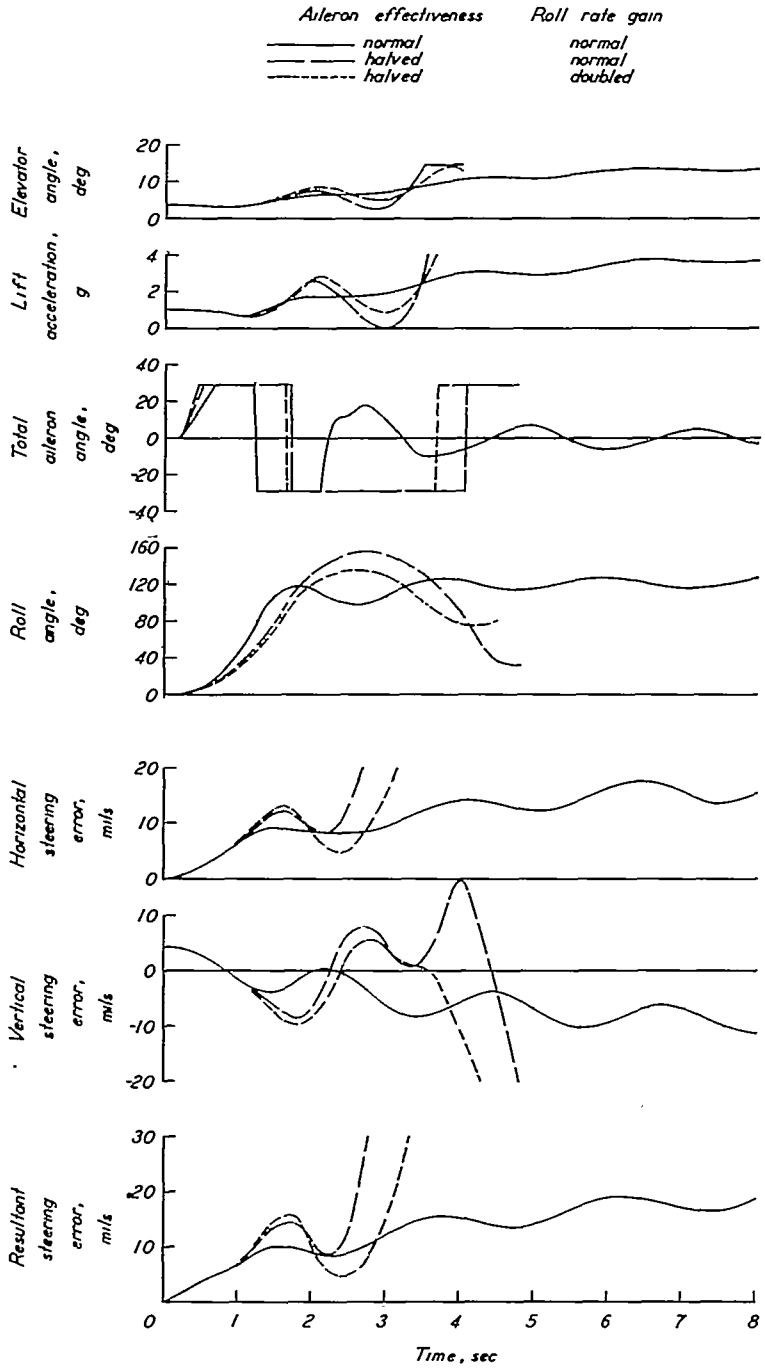

Figure 12.- Time histories of horizontal, vertical, and resultant steering errors and of roll angle, lift acceleration, and aileron and elevator deflections of an interceptor in following a bomber diving turn maneuver of 3g lift acceleration showing effect of reduced aileron effectiveness. Maneuver range, 5,000 feet; interceptor velocity, 1,650 feet per second; closing rate, 330 feet per second.

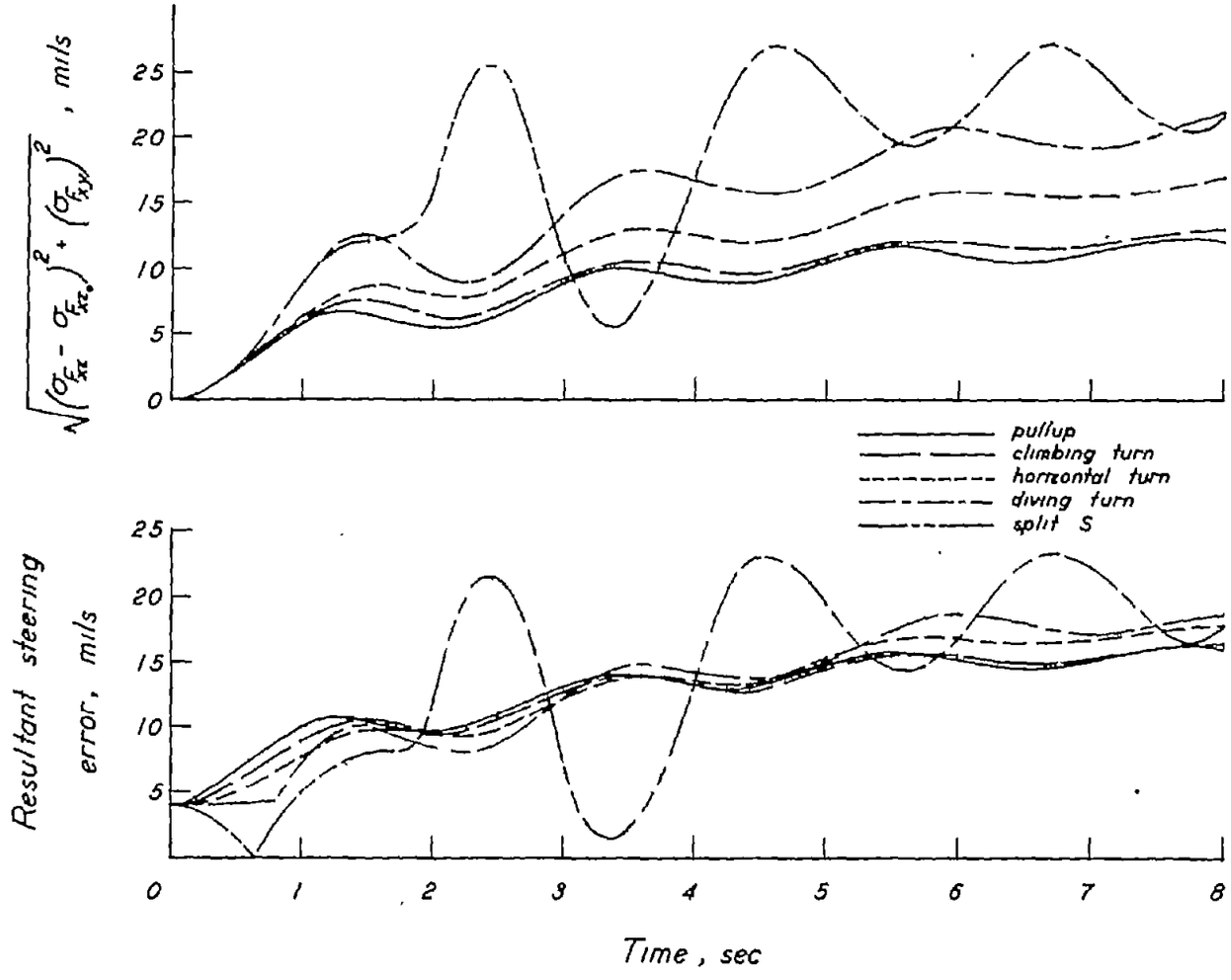

Figure 13.- Time histories of steering errors of an interceptor in following various types of bomber evasive maneuvers of 3g lift acceleration showing the effect of rolling. Maneuver range, 5,000 feet; interceptor velocity, 1,650 feet per second; closing rate, 330 feet per second.

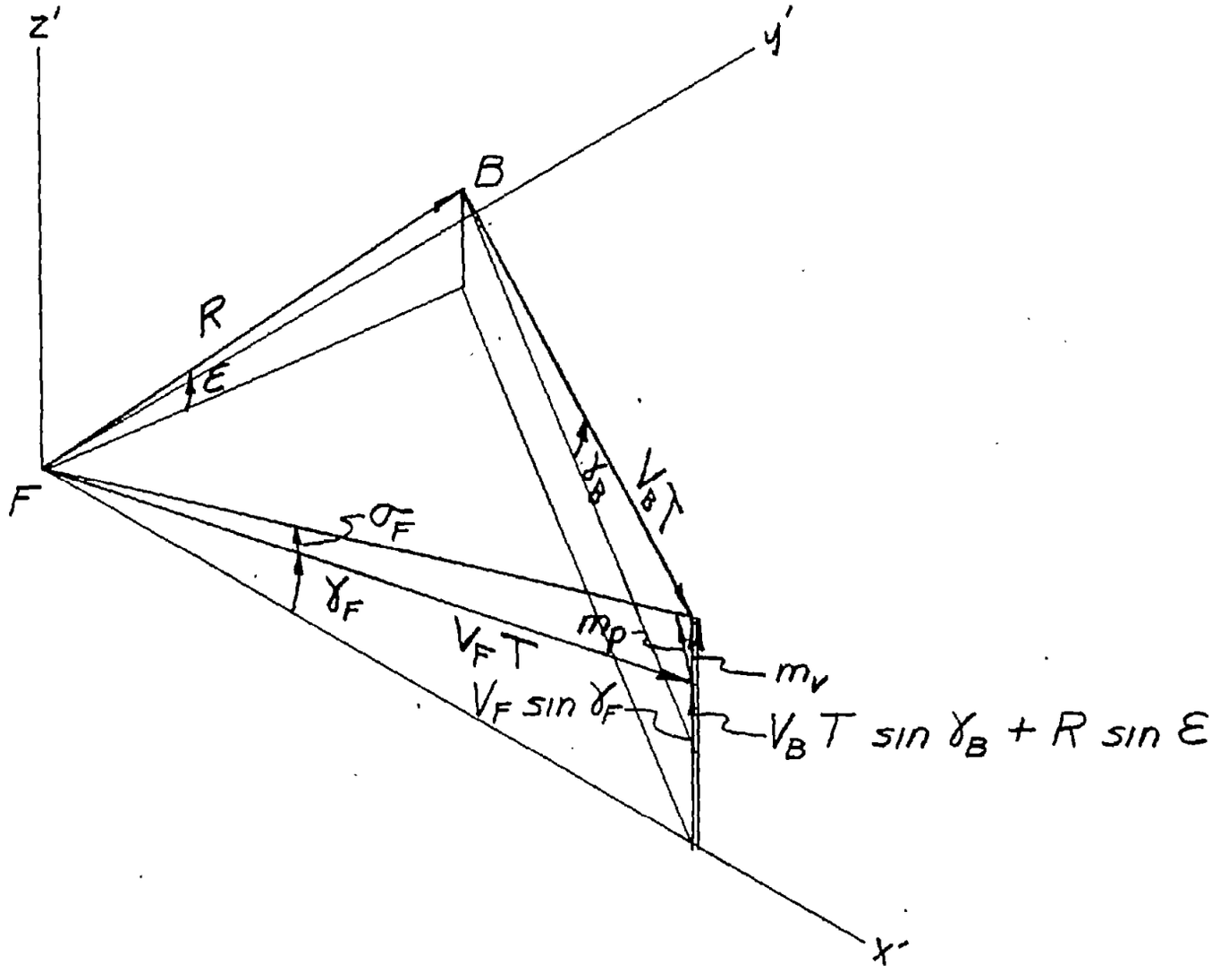

Figure 14.- Geometry of attack situation for collision attack.