54-24 12

UNCLASSIFIED USR #9906

~~CONFIDENTIAL~~

Copy 209
RM E54F28a

NACA RM E54F28a

TECH LIBRARY KAFB, NM
0144004

NACA

DOWNGRADED AT 3 YEAR INTERVALS
DECLASSIFIED AFTER 12 YEARS

RESEARCH MEMORANDUM

6889

Classification cancelled (or changed to UNCLASSIFIED)
By Authority of TAB 65-14 Rev. A 281
(OFFICER AUTHORIZED TO CHANGE)
By
NAME AND
GS-11
GRADE OF OFFICER MAKING CHANGE)
3 Aug 65
DATE

A METHOD FOR PREVENTION OF SCREAMING IN ROCKET ENGINES

By Theodore Male and William R. Kerslake

Lewis Flight Propulsion Laboratory
Cleveland, Ohio

CLASSIFIED DOCUMENT

This material contains information affecting the National Defense of the United States within the meaning of the espionage laws, Title 18, U.S.C., Secs. 793 and 794, the transmission or revelation of which in any manner to an unauthorized person is prohibited by law.

NATIONAL ADVISORY COMMITTEE FOR AERONAUTICS

WASHINGTON
August 19, 1954

~~CONFIDENTIAL~~

UNCLASSIFIED

HADC54-3751

TECH LIBRARY KAFB, NM
0144004

UNCLASSIFIED

 [redacted]

DOWNGRADED AT 3 YEAR INTERVALS;
DECLASSIFIED AFTER 12 YEARS
DOD DIR 5200.10

NATIONAL ADVISORY COMMITTEE FOR AERONAUTICS

RESEARCH MEMORANDUM

A METHOD FOR PREVENTION OF SCREAMING IN ROCKET ENGINES

By Theodore Male and William R. Kerslake

3402

CY-1

SUMMARY

Lateral and longitudinal combustion-pressure oscillations that occurred in screaming combustion of a 1000-pound-thrust rocket engine using white fuming nitric acid and JP-4 fuel as propellants were successfully prevented by means of longitudinal fins in the combustion chamber. Fin position was critical, and complete attenuation was achieved only when the fins were located in a zone approximately 8 to 16 inches from the injector. Fins located in other zones, that is, near the injector or far downstream from the injector, did not stop the oscillations.

When oscillations occurred in finned chambers, the longitudinal mode seemed more dominant than the lateral mode; in chambers without fins, the lateral mode tended to be dominant. The lateral oscillation was distorted and its intensity diminished by the fins. Fins, however, did not affect the frequencies; the longitudinal frequency varied inversely with chamber length, and lateral frequencies varied only slightly from an average of 6000 cycles per second.

INTRODUCTION

Screaming (high-frequency combustion-pressure oscillations) causes destructive burnouts of rocket engines because of abnormally high heat-transfer rates. The unpredictable sudden burnouts have spurred experimental work which can sometimes determine the design criteria necessary to prevent screaming in a particular engine. The solutions, however, have not been applicable to other engines. Therefore, a more general solution is highly desirable.

Theoretical analyses (ref. 1) have indicated the areas of experimental attack on the problem of screaming. Experimentally, various combustion oscillations (refs. 2, 3, 4, 5, and 6) have been correlated with acoustic modes. Erosion studies, coupled with photographic evidence (ref. 5), have shown that the lateral rotary mode is very destructive. These studies also indicated that the strong lateral oscillations were

[redacted]
UNCLASSIFIED HADC54-375 118

preceded by strong longitudinal oscillations. However, the correlation between the rotary mode and the longitudinal mode was not established.

In addition to studies of combustion oscillation phenomena, methods for attenuating oscillations are receiving attention. The introduction of physical barriers, changes in injector configuration or combustion-chamber geometry, or alteration of the propellant chemical composition are possible means to prevent or avoid screaming. References 7 and 8, for example, give results of using acoustical absorbers and of changes in injector configuration on attenuating oscillations. In turbojet afterburners (ref. 6), perforated liners have recently been used successfully to prevent destructive "screech", as high-frequency combustion oscillations are termed in the afterburner field. 3402

This report presents the results of using fins or baffles in the combustion chamber to prevent screaming. It was assumed that these fins or baffles would strongly damp the lateral modes and, at the same time, upset any interaction that might exist between longitudinal and lateral modes. Consequently, in this investigation, longitudinal fins were used for this purpose in a 1000-pound-thrust rocket engine using white fuming nitric acid and JP-4 fuel as propellants. Streak photographs show the unattenuated oscillations as viewed through window slits in the combustion chamber. Window slits were used both parallel and perpendicular to the chamber longitudinal axis. These pictures are compared with similar pictures in which fins prevented screaming. To permit valid comparisons, engine operating conditions were kept reasonably constant for all runs.

In addition to attempts at attenuation, some runs were made to determine the effect of chamber length on both lateral and longitudinal modes. These runs did not have attenuating fins and were used for comparison with runs using fins.

EQUIPMENT

Engine. - The rocket engine was designed for 1000-pound thrust and 300-pounds-per-square-inch chamber pressure. It was a 4-inch-diameter cylindrical combustion chamber equipped with a triplet injector and a convergent-divergent nozzle.

The combustion chamber had interchangeable sections for varying the chamber length. Figure 1 is a disconnected assembly which shows the basic rocket-engine parts. Three plastic-lined cylinders (14, 20, and 26 in. long) were slotted axially for obtaining longitudinal streak photographs. Figure 2 shows a more detailed view of the 20-inch-long cylinder.

Lateral-streak photographs were obtained with the equipment shown in figure 3. The window for lateral-streak views was a 1/4-inch plastic disk mounted perpendicular to the chamber axis. The position of the plastic disk was varied by interchanging various length cylinders. Two of the cylinders are shown in the disconnected assembly; the cylinder near the injector contains fins which are shown more clearly in figure 4.

The uncooled fins were made of steel bar stock (1- by 1/2-in.). For most of the work the fins were 4 inches long. In a few instances, 2- and 3-inch-long fins were used and, in one case, the fins were 4 by 1/2 by 1/2 inch.

Injector. - The injector, shown in figure 5, was an annular-triplet design with two oxidant streams impinging on one fuel stream. The same injector was used in reference 5 and described therein.

Propellants. - In all cases, the oxidant was white fuming nitric acid (WFNA) that met MIL 14104 specifications. The fuel was JP-4. To obtain a self-igniting start, furfuryl alcohol leads preceded the injection of JP-4 fuel.

Instrumentation - conventional. - Rocket-engine thrust (accuracy of ±2 percent) was measured by a strain-gage load cell. Propellant flows (accuracy, ±5 percent) were measured with orifices equipped with strain-gage differential-pressure transducers. Propellant flow was also measured by rotating-vane-type flow meters. Chamber static pressure was measured by a strain-gage transducer (accuracy, ±5 percent) and by a Bourdon tube.

Instrumentation - camera. - Streak photography was the primary means for indicating and measuring screaming phenomena. For obtaining longitudinal streak records, the camera was oriented so that the film would move perpendicular to the window slit; consequently, the film moved perpendicular to the propellant gas motion and recorded on the film as a diagonal line resulting from the combined film and gas motions. Figure 6 shows a schematic illustration of the longitudinal-streak photography method.

For lateral-streak photography, the camera was rotated 90° so that the window slit remained perpendicular to the direction of film motion. In this case, the gas motion was parallel to the film motion.

In all cases the film was 18 millimeters wide and the film speed was approximately 75 feet per second.

OPERATIONAL PROCEDURE

The rocket was operated by the following procedure: Automatic recording instruments were turned on; the acid propellant valve was

opened; when the entrance of acid into the chamber was observed, the moving-film camera was turned on and the fuel propellant valve was opened. Ignition was spontaneous with the furfuryl alcohol slug lead. The propellant flows were regulated by the propellant-tank pressures to maintain constant chamber pressure and oxidant-fuel ratio.

RESULTS

Engine Performance

When screaming combustion occurred, the scream started after approximately 1 second of operation during the change from furfuryl alcohol to JP-4 fuel. The engine was allowed to continue screaming for 1 to 3 seconds. When smooth combustion was observed, the rocket was run for a period of up to 8 seconds. A summary of the performance data is given in table I.

The plot (fig. 7) of characteristic velocity C^* which is defined as

$$C^* = \frac{P_c A_t g}{W_t}$$

where

P_c chamber pressure, lb/sq in. abs.

A_t throat area, sq in.

g gravitational constant

W_t total propellant flow, lb/sec

against oxidant-fuel weight ratio O/F shows the random scatter, within experimental error, of the data of most runs. The runs with extensive plastic erosion were similar to those runs using the steel chamber, except that the thrust of the plastic-lined chambers was somewhat higher on the average than the steel-chamber thrust. This deviation may have been due to the indefinite added mass flow of the plastic.

The C^* data show no correlation with chamber length. Also, the incidence of scream showed no marked effect on performance. This appears contrary to other data of this laboratory where screaming combustion usually, but not always, gave superior performance to that of smooth combustion.

Observations With Fins

In the prevention of screaming, the position of the fins was found to be critical. In chambers up to 31 inches long, both lateral and longitudinal oscillations were completely attenuated by placing the fins in the zone approximately 8 to 16 inches from the injector. When the fins were placed near the injector or beyond 16 inches from the injector, the engine screamed in much the same manner as though no fins were used. Figure 8 is a summary of the fin positions in the various length chambers. The shaded fins were effective. All of the fin sizes in the plot were identical, as shown in the inset, except as minor erosion changed the fin shape slightly.

3402

To confirm the importance of position, two sets of four fins each straddled the effective zone of a chamber 23 inches long; one set was placed near the injector and the other set was placed just downstream of the 8- to 16-inch control zone. The engine still screamed.

Consideration was given to the possibility that fin sizes could be reduced if the most critical position could be found. Two fins, instead of the usual four, were placed diametrically opposite each other in the effective zone, but with no success in preventing screaming. Fins of half height (four fins 4 in. long, 1/2 in. wide, and 1/2 in. high) were also found to be ineffective. Half-length fins (four fins 2 in. long, 1/2 in. wide, and 1 in. high) were ineffective, but three-quarter length fins (four fins 3 in. long, 1/2 in. wide, and 1 in. high) were successful in one trial in a 30-inch-long chamber. Only a few trials of smaller fins in various length chambers were made and these results are therefore inconclusive.

With screaming in finned chambers, as in the case of no fins (ref. 2), longitudinal oscillation frequencies correlated with the parameter C^*/L, characteristic velocity divided by combustion-chamber length. A summary plot of the variation of frequency with chamber length is shown in figure 9. The reference lines are the theoretical correlation lines for the first- and second-order longitudinal modes of oscillation. The longitudinal oscillations appear to be only of the first order. Lateral oscillation frequency showed no significant difference from the oscillation frequencies of nonfinned chambers, and the frequencies ranged between 5500 and 6000 cycles per second. These frequencies agree reasonably well with the first tangential transverse mode where $\beta = 0.586$ in the relation, $f = c\beta/2r$ (where f is frequency; c, velocity of sound; β, constant; and r, chamber radius).

Streak-photography observations. - Typical streak photographs which illustrate the effect of fin position on the combustion oscillations are shown in figure 10. Smooth combustion that resulted from proper fin position is shown in figure 10(a). The illustrated typical run, with the

normally expected scream satisfactorily stopped, occurred in a chamber 30 inches long; this length chamber was so long that, without fins, it always screamed.

Runs that screamed generally showed many variations of oscillation combinations. Figures 10(b) and (c) show, for example, two types of oscillation combination that occurred during the same run. Fins that did not prevent screaming showed a strong tendency to disturb and warp the lateral oscillations. At the same time, the longitudinal pulses became more prominent. This observation is derived from a study of all the photographs. 3402

Figure 10(d) is an illustration of the double set of fins that straddled the control zone, and the photograph shows the persistence of the oscillations. This photograph should be compared with the much longer chamber of figure 10(a) in which screaming was prevented with only one set of fins.

Observations Without Fins

Of 20 runs without fins, only three did not scream and all three nonscreaming runs occurred in chambers less than 20 inches long. Screaming was obtained in all chambers tried and was readily obtained in chambers 20 or more inches long.

With one possible exception, longitudinal oscillations were observed in every screaming run. The frequencies, determined from streak photographs, show reasonable agreement with the theoretical first-order oscillation.

Lateral oscillations were observed at approximately 6200 cycles per second. Sometimes the frequency was as high as 6500 and occasionally as low as 5800. However, study of the lateral oscillation frequency for several chamber lengths showed that the frequency was unaffected by the length of the chamber or by the longitudinal oscillation frequency.

General observations from streak photography. - The following discussion emphasizes that streak photography is extremely useful in analyzing combustion oscillations in rocket chambers, but extreme care may be needed in the analysis. In order to be certain that a mode of oscillation is purely lateral (cyclic pressure pulses moving perpendicular to the chamber axis) or purely longitudinal (cyclic pressure pulses moving parallel to the chamber axis), it is necessary that oscillations record as straight lines or bands perpendicular to the film motion. Each angular line could be the resultant of two directions of motions.

Observations of streak photographs. - With the preceding general discussion in mind, the longitudinal oscillations of this investigation

generally recorded as inclined streaks when photographed through a longitudinal slit; when photographed through a lateral slit, however, the longitudinal oscillations recorded as bands. Conversely, the lateral oscillations recorded as bands through a longitudinal slit and as inclined streaks or waves through a lateral slit. Examples of each of these combinations are shown by the photographs of figure 11. Although all four examples are probably derived from pure oscillations, only figures 11(b) and (c) show perpendicular bands which are reliable indications of the purity of the particular mode.

3402

Longitudinal oscillations seemed to record consistently as bands when photographed through a lateral slit and, consequently, have been considered to be acoustically pure. Lateral oscillations, however, had many shapes, irrespective of the viewing direction. The many variations of bent, tilted, and misshapen streaks may be indications of complicated modes of oscillation or of deviated directions of motion. Figure 12 shows several examples of distorted waves. The top example shows a tented wave structure at the nozzle end of the chamber. The other two show extraneous waves caused by the interaction of the longitudinal and lateral waves. Some triggering interactions may be indicated by the multilined form of the longitudinal wave.

Study of the slit photographs reveals important related interactions as follows: (1) When longitudinal oscillations started, strong lateral oscillations soon appeared (usually within 3 to 8 longitudinal cycles) and thereafter coexisted. These lateral oscillations always initially appeared at the injector end of the chamber; succeeding lateral cycles indicated a gradual spreading of the wave throughout the chamber. (2) In only one out of about 100 runs did the strong lateral oscillations apparently start without prior longitudinal pulses. (3) Lateral oscillations sometimes had longitudinal components. (4) In four out of six runs viewed through longitudinal slits, a pure lateral oscillation of about 9000 cycles per second was faintly but distinctly evident prior to the onset of longitudinal pulses. The faintness of these preliminary oscillations would preclude detection in runs viewed through lateral slits.

DISCUSSION

The energy which drives oscillations is considered to be primarily derived from the combustion heat release. To avoid the oscillations, the energy which initiates the wave may be dissipated at its inception and thus prevented from becoming sufficiently concentrated to initiate a wave. On the other hand, if a wave has already acquired sufficient energy to propagate, energy may be dissipated at a later time or place but at a faster rate than the wave can obtain further energy. At least three possible reasons for effectiveness of fins may be hypothesized:

(1) The fins interfere with lateral waves as might be expected from the design intention. However, fins placed too close to the injector do not dissipate the energy which starts the oscillations because the heat release occurs beyond the fins. Likewise, if the fins are beyond the completed heat-release zone, the oscillation pulse has already obtained its energy from the heat release. Apparently, the fins must be placed in the zone where the heat-release rate is high or near maximum.

If it is assumed that the early, faint, 9000 cycles-per-second lateral oscillations always occur first and trigger the longitudinal oscillations, which apparently always trigger second-stage lateral oscillations, then it is evident that stopping the early lateral oscillations by fin interference would also prevent the later oscillations. 3402

(2) The fins may serve as dampers for the longitudinal wave and their effectiveness may be related to the acoustic midpoint. Except for three instances, the positions that were found to be effective were at or near the acoustic midpoint. The acoustic midpoint is the zone of greatest gas motion for the longitudinal oscillation, and the fins may provide sufficient turbulence and frictional drag to decrease the longitudinal wave velocity. The strong lateral waves that appear to start at the injector when the longitudinal wave reflects from the injector wall thus would have no starting mechanism.

(3) The fins may affect both modes of oscillation. The lateral waves may be damped by direct blockage by the longitudinal fins if the fins are long enough and high enough and located where they can dissipate energy. The longitudinal waves, on the other hand, may be severely damped if the fins are long enough to create high frictional resistance and placed where they can absorb the most velocity energy. If the effective position of the fins for both lateral and longitudinal waves would coincide, the screaming would naturally cease.

SUMMARY OF RESULTS

A rocket engine of 1000-pounds thrust and 300 pounds per square inch chamber pressure using WFNA and JP-4 fuel as propellants was operated under screaming conditions to determine the effect of the use of longitudinal fins for preventing screaming. The combustion chamber was 4 inches in diameter and had various lengths from 16 to 38 inches. The fins were 4 inches long, 1/2 inch wide, and 1 inch high. Four fins were used simultaneously and axially attached to the chamber wall in symmetrical positions equidistant from the injector center.

1. Fins located in the chamber affected the combustion as follows:

   (a) Fins of suitable size could prevent both lateral and longitudinal oscillations if placed in the proper position in

chambers up to 31 inches long, namely, in the zone between 8 and 16 inches from the injector.

(b) Fins would disturb the lateral oscillations but would not prevent screaming if the fins were placed near the injector or more than 16 inches from the injector.

(c) Longitudinal oscillations appeared to be more dominant than lateral oscillations.

(d) Longitudinal oscillation frequencies varied with chamber length according to acoustic theory.

(e) Lateral oscillation frequencies were approximately 6000 cycles per second and were not dependent upon chamber length or longitudinal oscillation frequency.

2. The following observations made of operation without fins confirm previous work:

(a) Longitudinal oscillations almost always preceded the lateral oscillations which averaged approximately 6000 cycles per second.

(b) Lateral oscillations appeared first at the injector end and spread throughout the chamber.

(c) Lateral and longitudinal frequencies coexisted but were independent of each other.

(d) The direction of lateral wave propagation may be affected by the longitudinal waves.

(e) An apparently weak lateral oscillation of 9000 cycles per second appeared to precede the entire combined screaming phenomena.

CONCLUDING REMARKS

The successful use of fins indicates one way of solving the screaming problem. Also, further insight into the nature of the screaming problem may be gained from the apparently critical placement of the fins. Although the chambers over 31 inches long screamed in spite of the use of 4-inch-long fins, longer fins should be tried to establish a possible minimum ratio of fin length to chamber length. It is apparent that, since the injector controls the region of heat release, the position of fins for best attenuation will be a function of injector design.

3402

CI-2

It is not to be construed that the fin method of attack is the only one - probably many configurations might be equally effective. Other devices should be tried and some of them might incorporate engine components such as part of the injector. Probably the most elegant solution would be to obtain a nonscreaming heat-release schedule in the chamber by altering the physical and chemical properties of the propellants.

Lewis Flight Propulsion Laboratory
National Advisory Committee for Aeronautics
Cleveland, Ohio, June 30, 1954

3402

REFERENCES

1. Crocco, Luigi, and Cheng, Sin-I.: High Frequency Combustion Instability in Rockets with Distributed Combustion. Fourth Symposium (International) on Combustion. The Williams & Wilkins Co., 1953, pp. 865-880.

2. Tischler, Adelbert O., Massa, Rudolph V., and Mantler, Raymond L.: An Investigation of High-Frequency Combustion Oscillations in Liquid-Propellant Rocket Engines. NACA RM E53B27, 1953.

3. Berman, Kurt, and Cheney, Samuel H., Jr.: Combustion Studies in Rocket Motors. Jour. Am. Rocket Soc., vol. 23, no. 2, Mar.-Apr. 1953, pp. 89-95; discussion, pp. 96; 98.

4. Smith, R. P., and Sprenger, D. F.: Combustion Instability in Solid-Propellant Rockets. Fourth Symposium (International) on Combustion, The Williams & Wilkins Co., 1953, pp. 893-906.

5. Male, Theodore, Kerslake, William R., and Tischler, Adelbert O.: Photographic Study of Rotary Screaming and Other Oscillations in a Rocket Engine. NACA RM E54A29, 1954.

6. Lewis Laboratory Staff: A Summary of Preliminary Investigations into the Characteristics of Combustion Screech in Ducted Burners. NACA RM E54B02, 1954.

7. Lawhead, Robert B., and Grossklaus, Albert A.: Rocket Engine Vibration Studies. Rep. AL-1590, Supplemental Summary Rep. for period ending Dec. 15, 1952, North Americal Aviation, Inc., Dec. 15, 1952. (Contract AF33(038)-19430, Proj. MX 919.)

8. Anon: Development of AJ11-9 Liquid-Propellant Booster Rocket. Rep. 611, Apr. 1, 1951 - Mar. 31, 1952. Aerojet Eng. Corp., Nov. 20, 1952. (Boeing Subcontract, U.S. Air Force Contract AF33(038)-19589, Proj. MX-1599.)

3402

CY-2 back

TABLE I. - PERFORMANCE DATA OF 1000-POUND-THRUST ROCKET ENGINE USING WFNA AND JP-4 FUEL AS PROPELLANTS

Run	Chamber pressure, lb/sq in. abs	Thrust, lb	Oxidant-fuel ratio	Specific impulse, lb-sec/lb	Total propellant flow rate, lb/sec	Characteristic velocity, ft/sec	Scream		Chamber length, in.	Fin mid-point, in. from injector	Number of fins	Fin[a] size, in.	Combustion chamber surface	Window slit
							Yes	No						
1	297	878	4.15	191	4.6	4750		✓	16	10.5	4	4x1	Steel	Lateral
2	297	843	4.18	208	4.6	5360	✓		17	----	None	---	Plastic	Longitudinal
3	308	938	4.10	209	4.6	5050	✓		17	----	None	---	Plastic	Longitudinal
4	276	825	4.97	185	4.5	4790		✓	17.5	12.0	4	4x1	Steel	Lateral
5	279	856	4.65	191	4.5	4810		✓	17.5	----	None	---	Steel	Lateral
6	316	1000	4.08	189	5.3	4900		✓	18	8.0	4	4x1	Steel	Lateral
7	296	960	4.29	193	5.0	4880		✓	18	8.0	4	4x1	Steel	Lateral
8	---	----	----	---	---	----	✓		18	3.5	4	4x1	Steel	Lateral
9	301	988	4.14	190	5.2	4800	✓		18	8.0	4	2x1	Steel	Lateral
10	318	996	4.18	193	5.2	5120	✓		18	9.0	4	2x1	Steel	Lateral
11	307	1020	4.05	199	5.1	4910	✓		19	----	None	---	Steel	Lateral
12	278	922	4.49	184	5.0	4750		✓	19	---	None	---	Steel	Lateral
13	282	947	4.30	185	5.1	4720		✓	19	----	None	---	Steel	Lateral
14	306	868	4.13	189	4.6	4860		✓	20	14.5	4	4x1	Steel	Lateral
15	299	853	4.30	191	4.5	4870		✓	20	14.5	4	4x1	Steel	Lateral
16	297	833	4.41	191	4.4	4970	✓		20	3.5	4	4x1	Steel	Lateral
17	---	----	----	---	---	----		✓	21.5	9.5	4	4x1	Steel	Lateral
18	325	843	4.18	187	4.5	5360	✓		23	----	None	---	Plastic	Longitudinal
19	298	777	4.85	172	4.5	4970	✓		23	18.0	4	4x1	Steel	Lateral
20	297	770	4.56	169	4.6	5030	✓		23	18.0	4	4x1	Steel	Lateral
21	301	771	4.68	170	4.6	5110	✓		23	3.5 8.0	4 4	4x1	Steel	Lateral
22	305	963	4.17	190	5.1	4930	✓		25	8.0	4	4x1	Steel	Lateral
23	295	955	4.22	189	5.0	4800	✓		25	3.5	4	4x1	Steel	Lateral
24	295	837	4.37	194	4.3	5020		✓	25.5	13.5	4	4x1	Steel	Lateral
25	313	997	4.22	191	5.2	4910	✓		26	----	None	---	Steel	Lateral
26	287	937	4.18	189	5.0	4780	✓		26	17.5	4	4x1	(b)	Longitudinal
27	297	937	4.21	189	5.0	4950	✓		26	17.5	4	4x1	(b)	Longitudinal
28	295	810	3.84	171	4.7	4660	✓		29	----	None	---	Steel	Lateral
29	320	897	4.01	195	4.6	5190	✓		29	----	None	---	Plastic	Longitudinal
30	320	870	4.45	200	4.4	5380	✓		29	22.5	4	4x1	Plastic	Longitudinal
31	---	---	---	---	---	----		✓	30	14.5	4	4x1	Steel	Lateral
32	290	772	4.67	175	4.4	4780		✓	30	12.0	4	4x1	Steel	Lateral
33	302	773	4.49	168	4.6	5050	✓		30	16.5	4	4x1	Steel	Lateral
34	272	887	4.42	174	5.1	4430	✓		30	14.5	4	4x1	Steel	Lateral
35	---	915	4.06	183	5.0	----		✓	30	14.5	4	4x1	Steel	Lateral
36	287	865	4.57	170	5.1	4710	✓		30	14.5	4	4x1	Steel	Lateral
37	284	843	4.40	163	5.1	4640		✓	30	14.5	4	4x1	Steel	Lateral
38	283	835	4.28	165	5.1	4750		✓	30	14.5	4	3x1	Steel	Lateral
39	305	923	4.17	175	5.3	4750	✓		32	22.0	4	4x1	Steel	Lateral
40	276	863	4.28	168	5.1	4350	✓		32	8.0	4	4x1	Steel	Lateral
41	271	802	3.85	167	4.8	4670	✓		32	15.0	4	2x1	Steel	Lateral
42	285	861	4.77	175	4.9	4830	✓		32	----	None	---	Steel	Lateral
43	286	835	4.71	164	5.1	4700	✓		32	12.5	4	2x1	Steel	Lateral
44	287	843	4.55	165	5.1	4710	✓		32	11.5	4	3x1	Steel	Lateral
45	283	868	4.41	171	5.1	4700	✓		32	13.0	4	3x1	Steel	Lateral
46	286	871	4.51	169	5.1	4700	✓		32	14.0	4	4x1	Steel	Lateral
47	286	908	4.47	182	5.0	4860	✓		37	13.5	4	4x1	Steel	Lateral
48	288	885	4.46	175	5.1	4750	✓		37	12.0	4	4x1	Steel	Lateral

[a]All fins 1/2 in. thick; all 4x1x1/2 fins plotted in fig. 11.
[b]Plastic and steel.

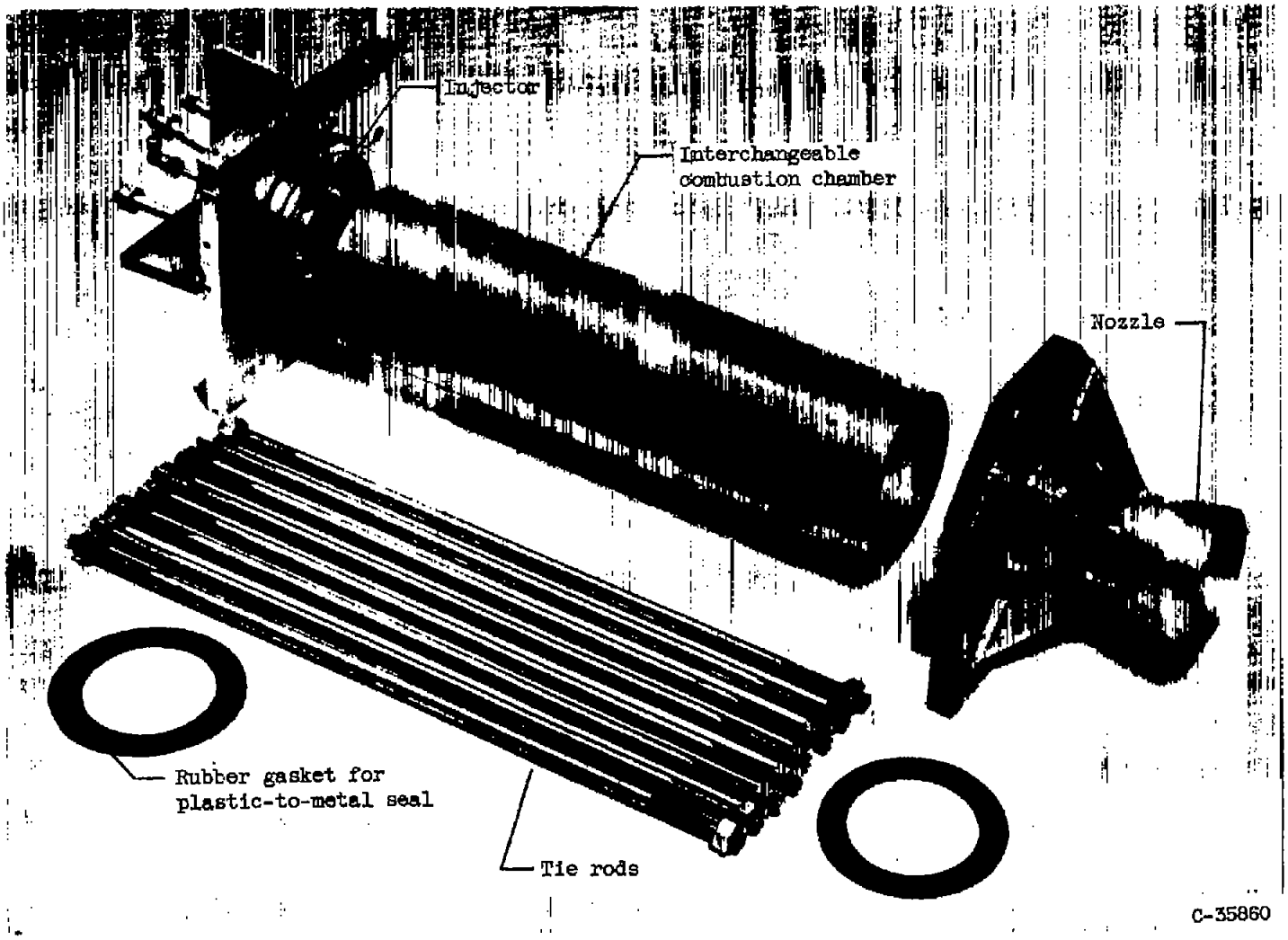

Figure 1. - Disconnected engine assembly for longitudinal streak photography.

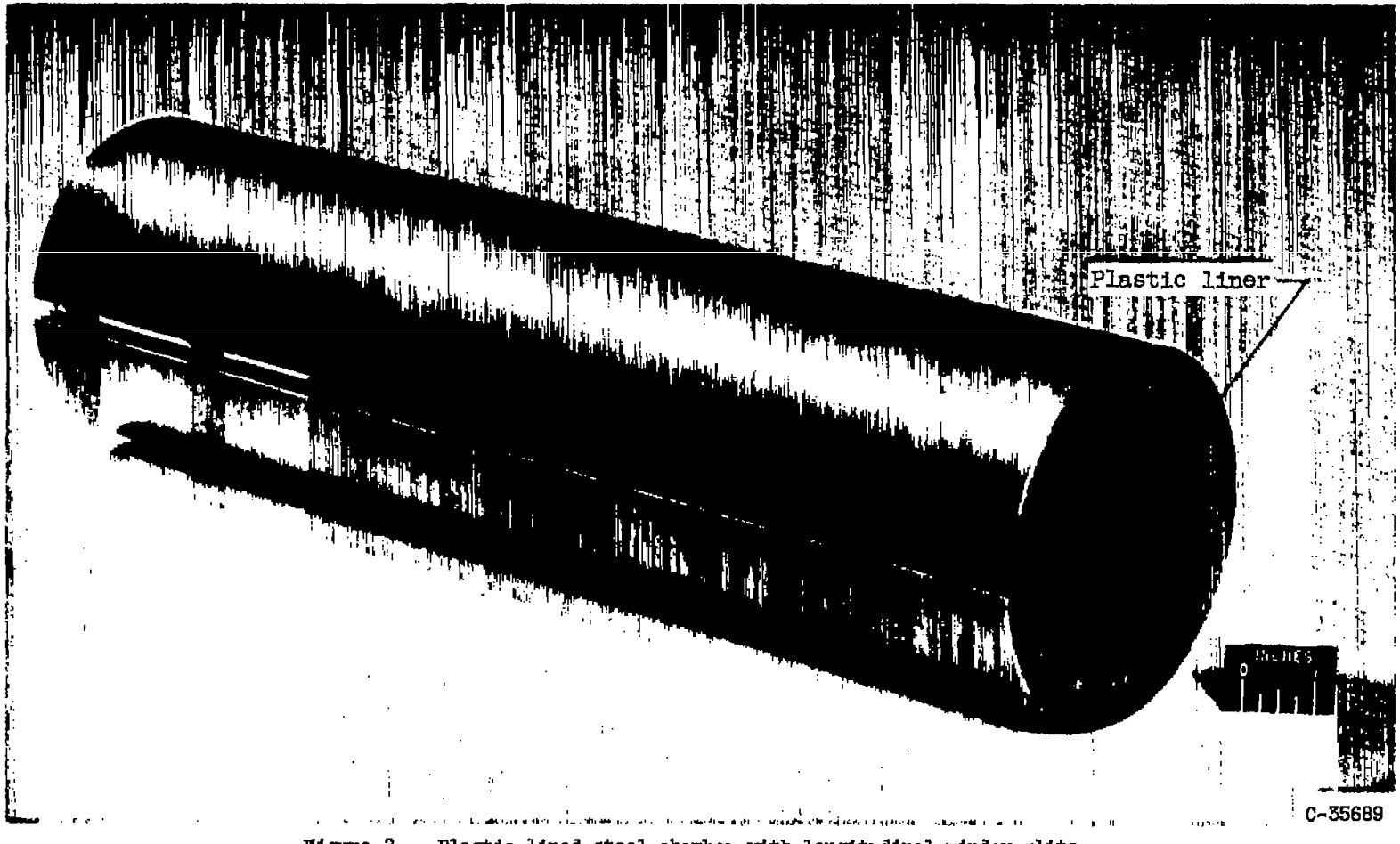

Figure 2. - Plastic-lined steel chamber with longitudinal window slits.

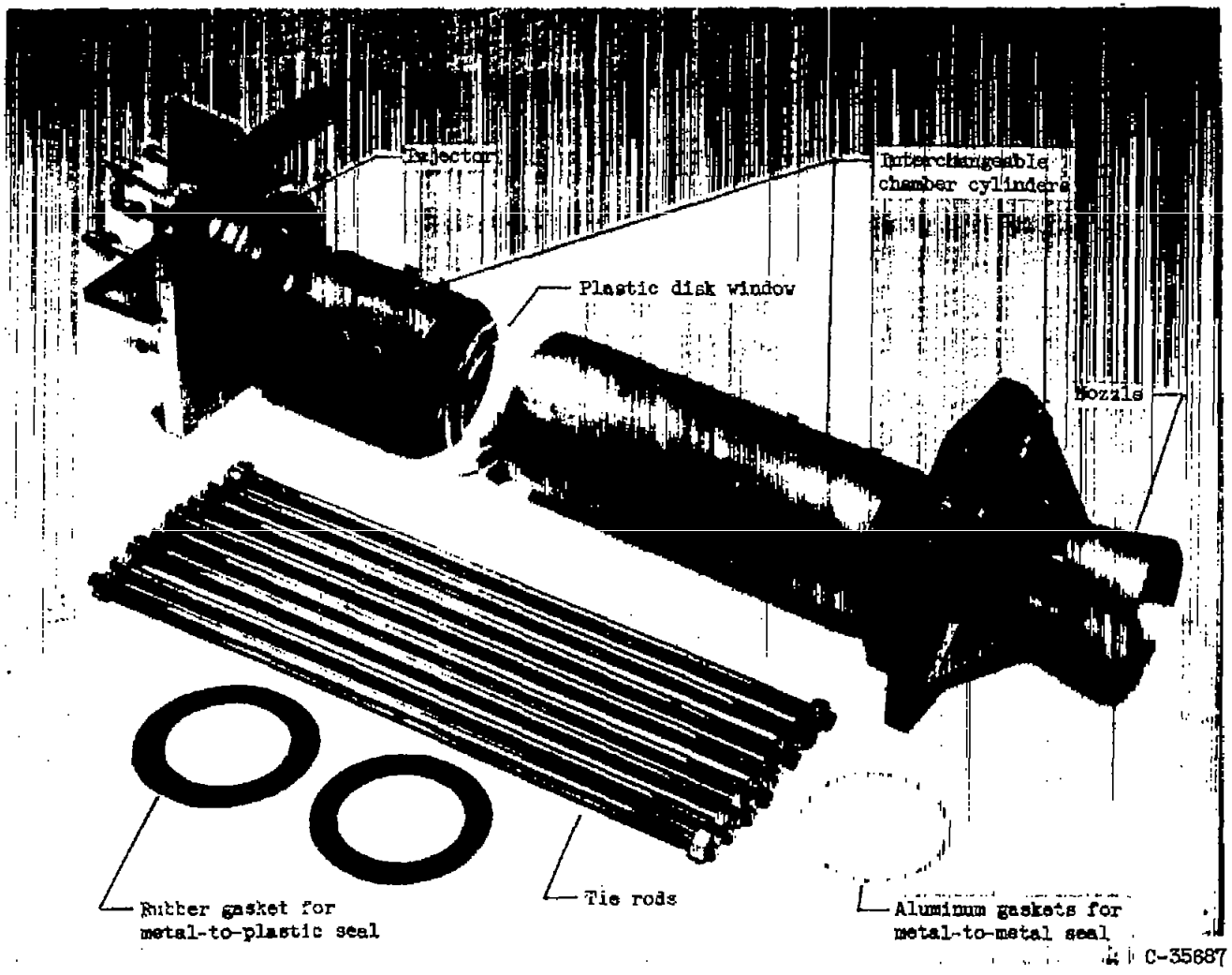

Figure 3. - Disconnected engine assembly used for lateral-streak photography.

3402

Figure 4. - Interchangeable chamber section with fins.

3402

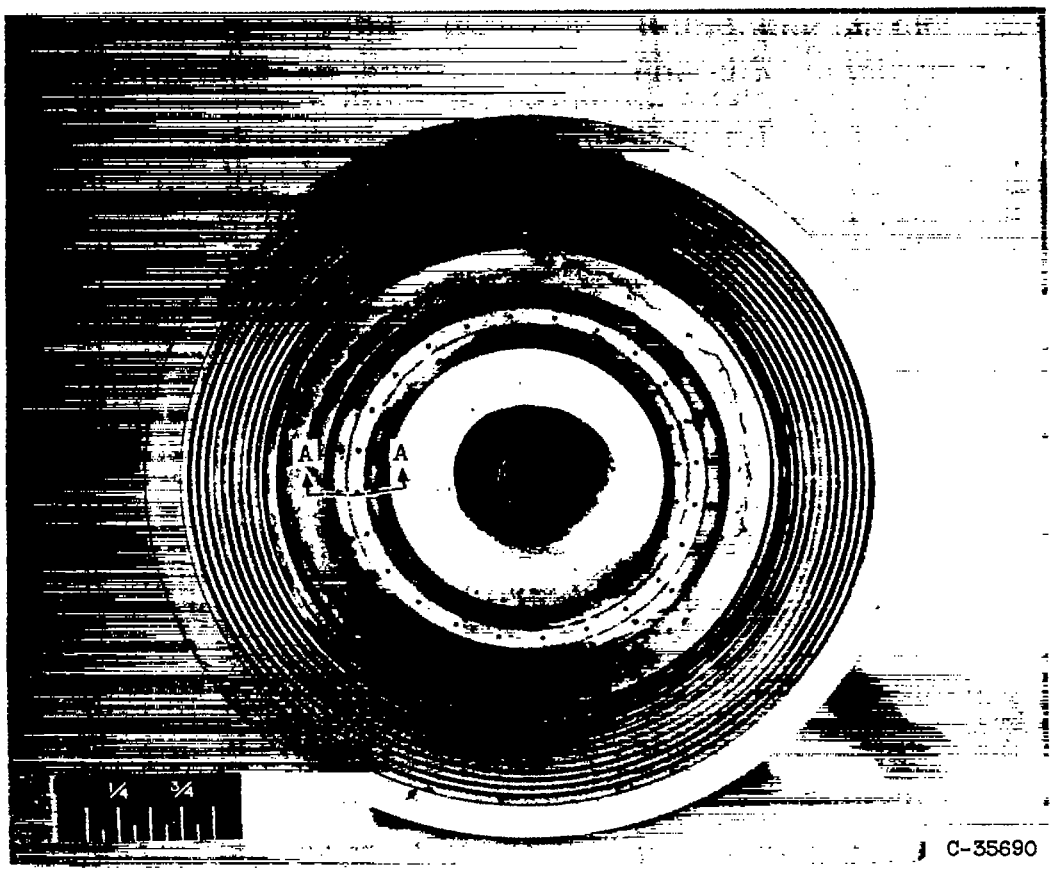

Annular triplet-impingement injector

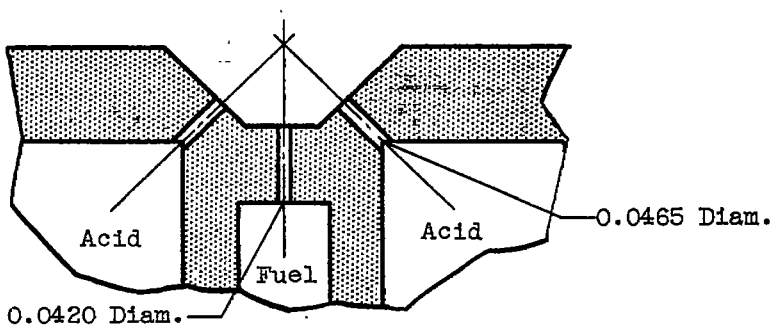

Section A-A

Cross section of one set of propellant orifices. Injector ring contains 24 sets of orifices.

Figure 5. - Annular triplet-impingement injector for 1000-pound thrust rocket engine using WFNA and JP-4 fuel as propellant.

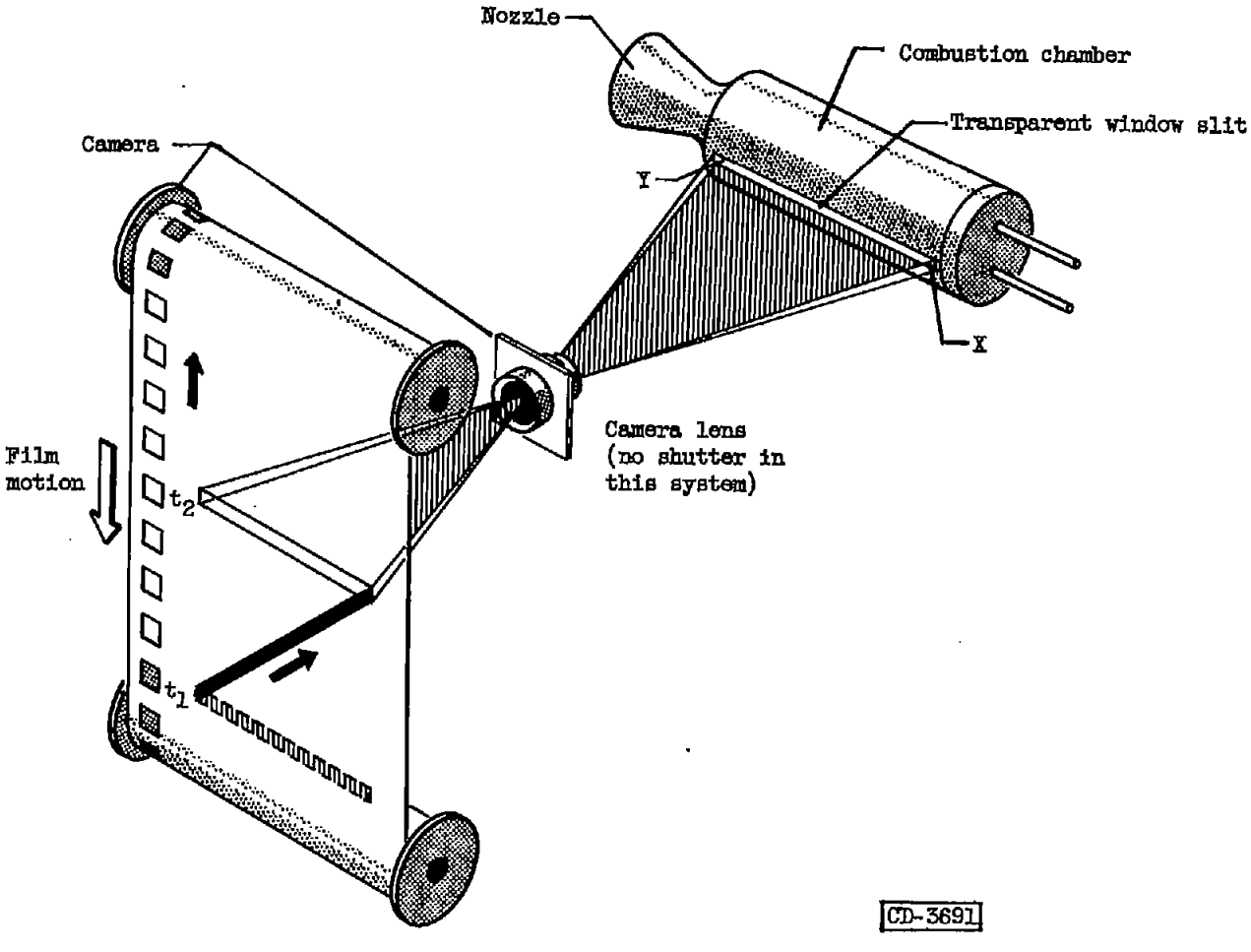

Figure 6. - Schematic illustration of optics of moving-film streak photography. Image of window slit is represented on film at two different times, t_1 and t_2. If, during uniform velocity of film, a bright light moves linearly within the combustion chamber from X to Y, the solid line (resultant of combined film and bright light motions) will be traced on the film.

3402

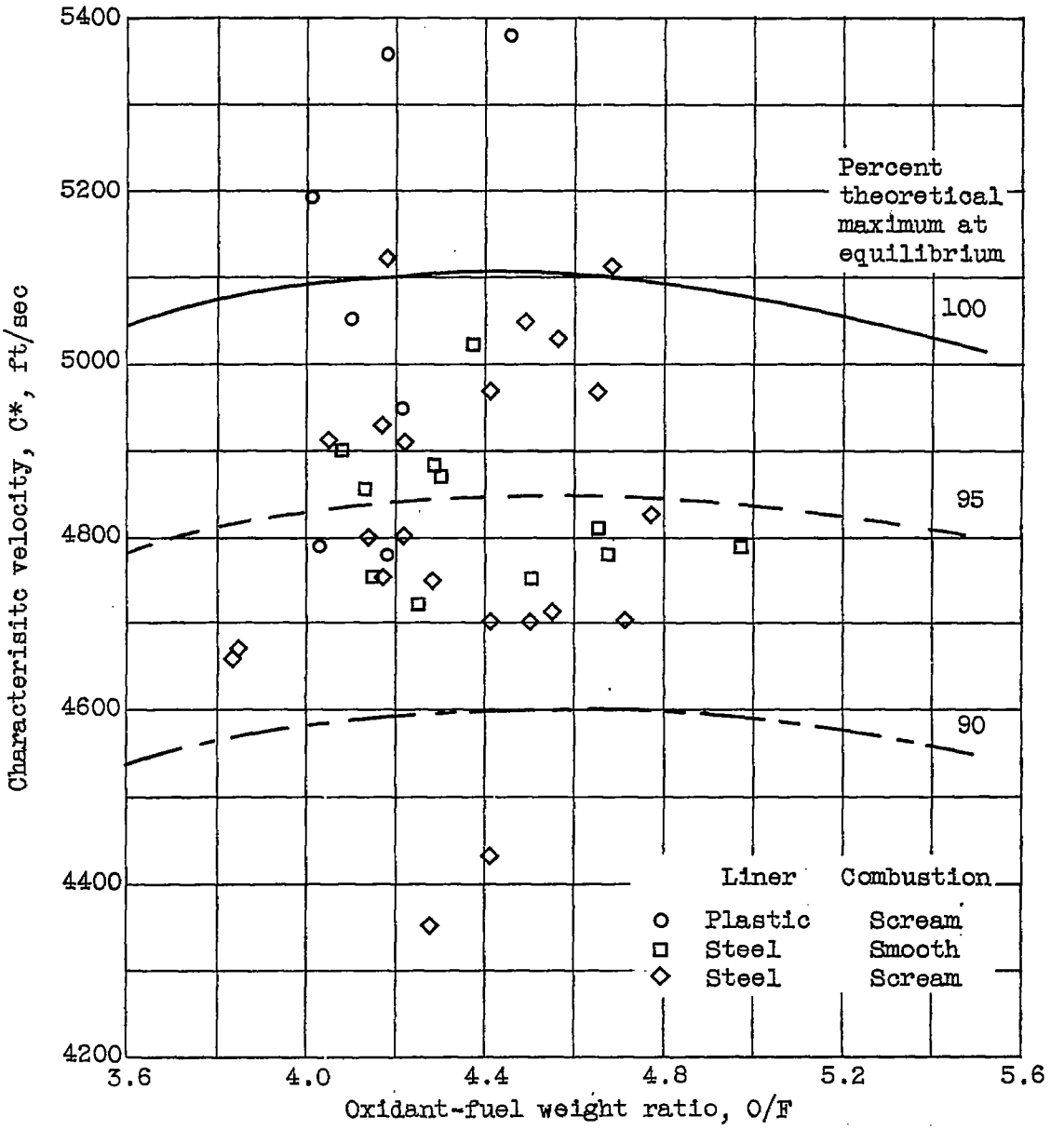

Figure 7. - Performance of 1000-pound-thrust rocket engine using WFNA and JP-4 fuel as propellants. Plastic liner runs are uncorrected for mass flow or heat of combustion from liner erosion and burning.

3402

CY-3 back

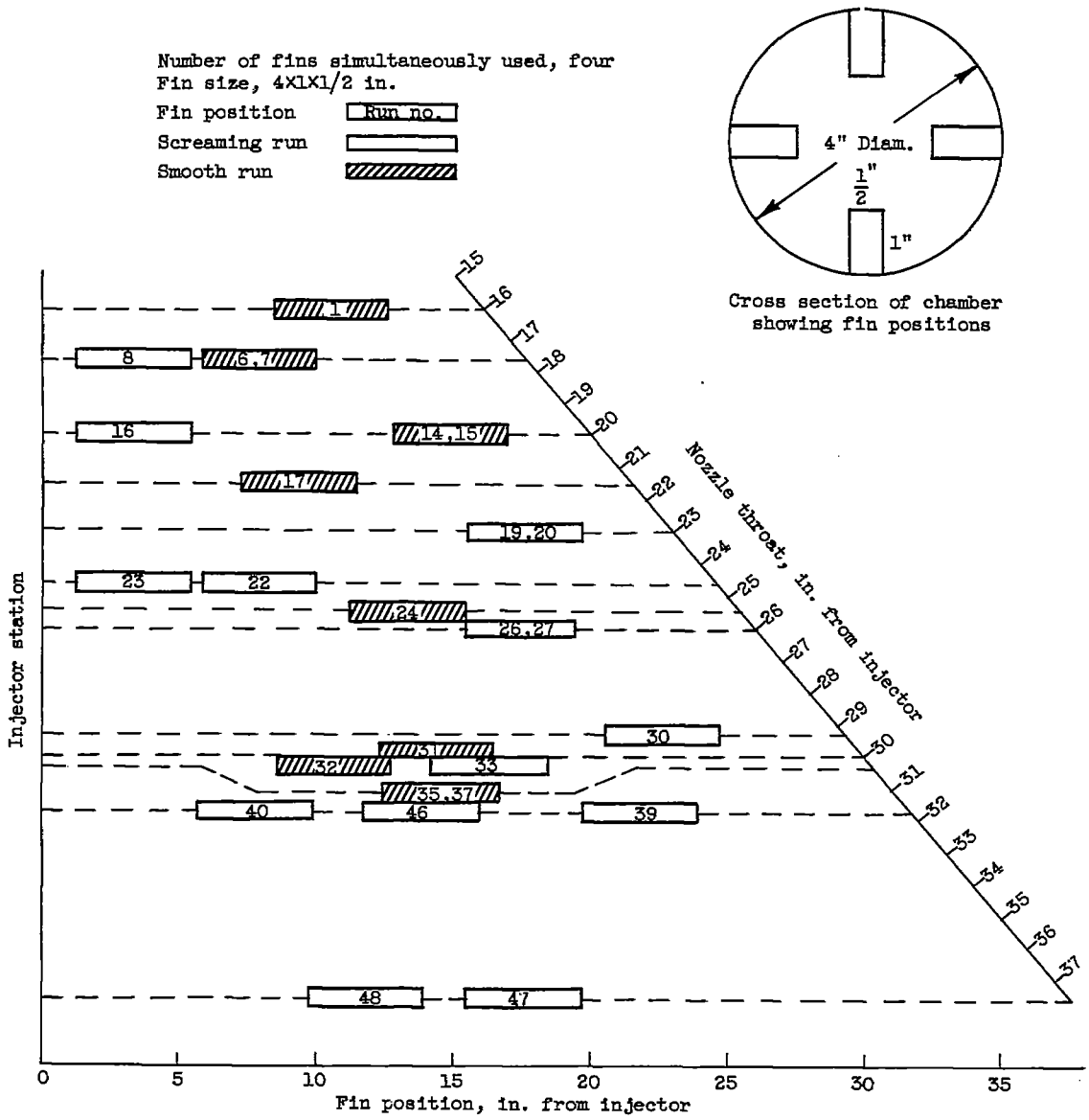

Figure 8. - Effect of fin position on prevention of rocket screaming oscillations.

3402

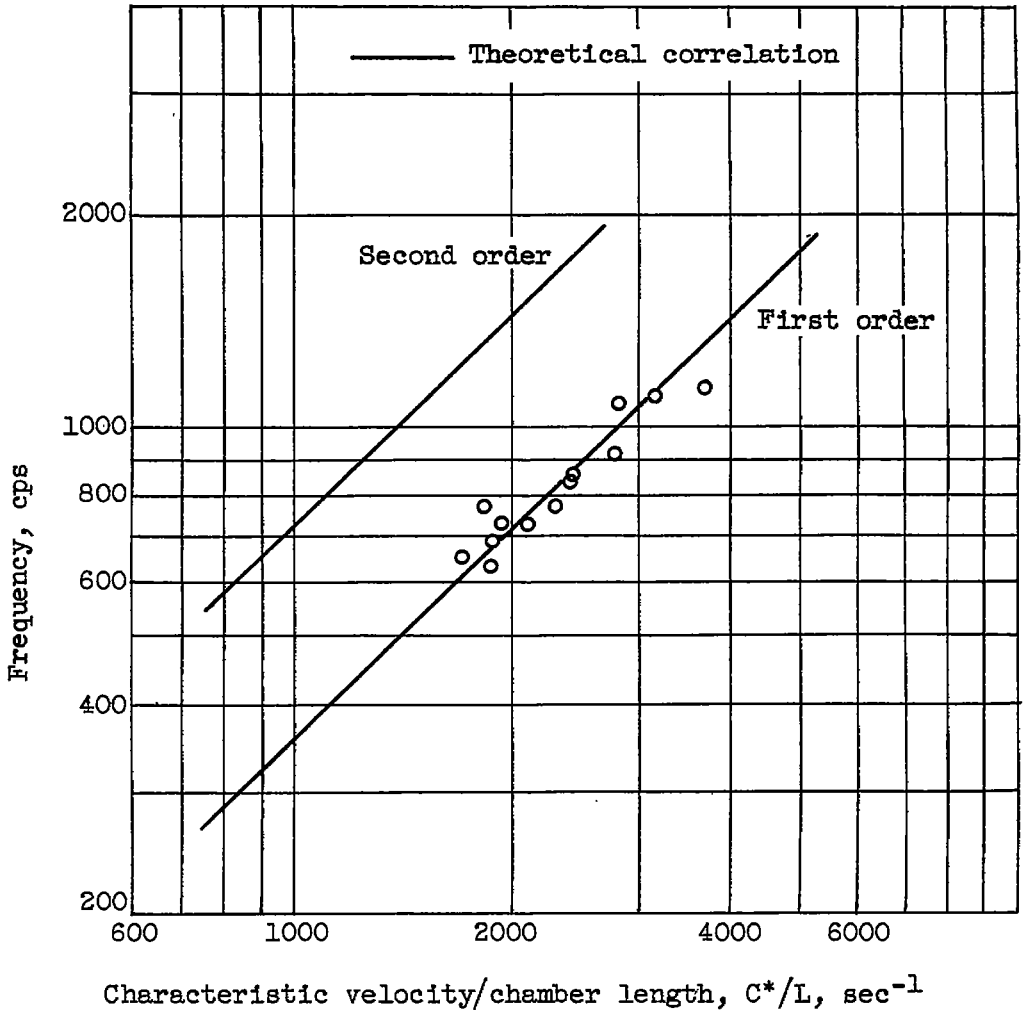

Figure 9. - Variation of longitudinal oscillation frequency of finned chambers with chamber length. Solid lines are based on the equation $f = 0.36\ n\ \frac{C^*}{L}$ where f is frequency; n, order of oscillation; C^*, characteristic velocity; and L, chamber length.

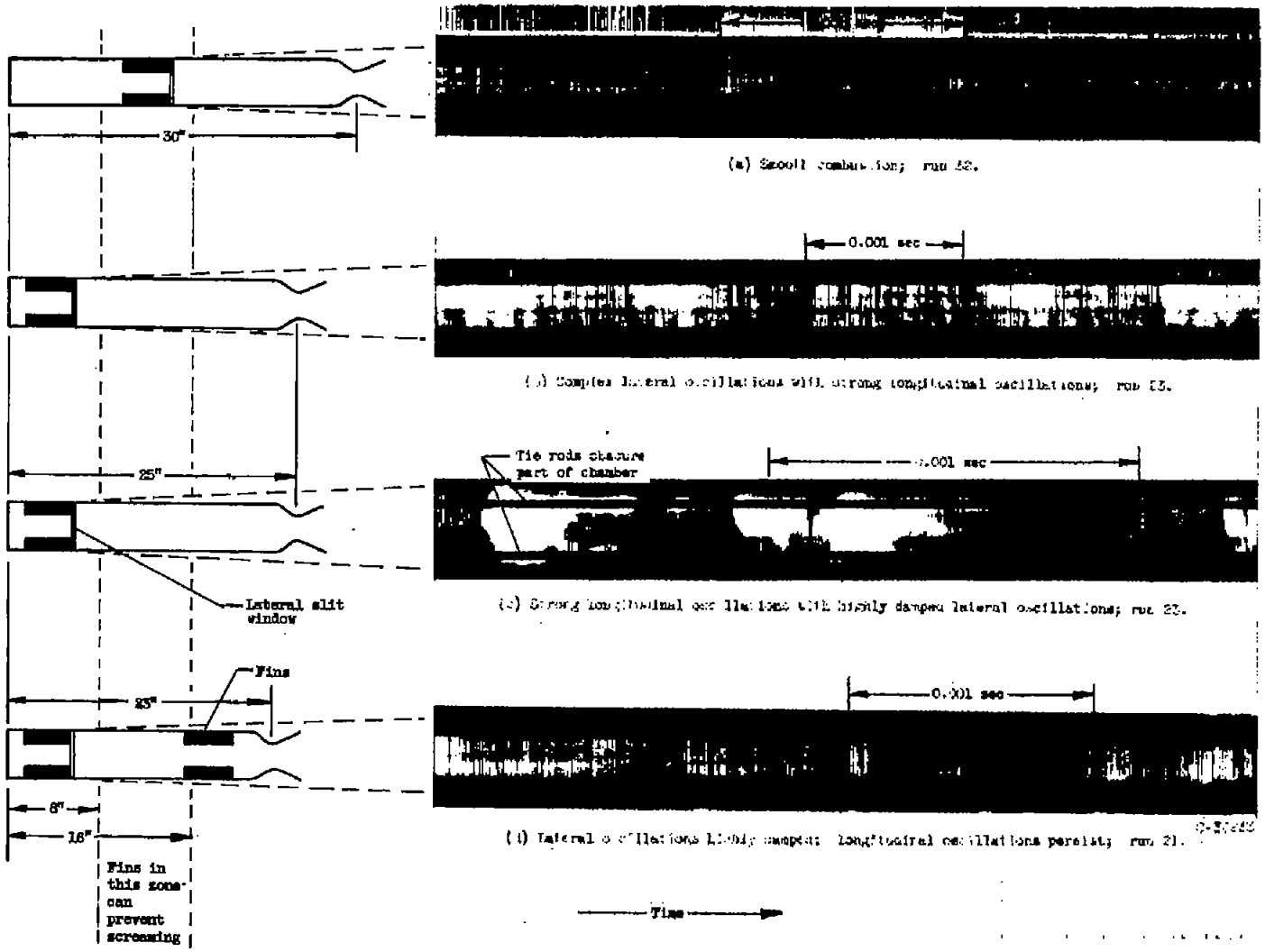

(a) Smooth combustion; run 32.

(b) Complex lateral oscillations with strong longitudinal oscillations; run 23.

(c) Strong longitudinal oscillations with highly damped lateral oscillations; run 22.

(d) Lateral oscillations highly damped; longitudinal oscillations persist; run 21.

Figure 10. - Streak photographs showing effect of fins on oscillatory combustion of 1000-pound-thrust, rocket engine using WFNA and JP-4 fuel as propellants.

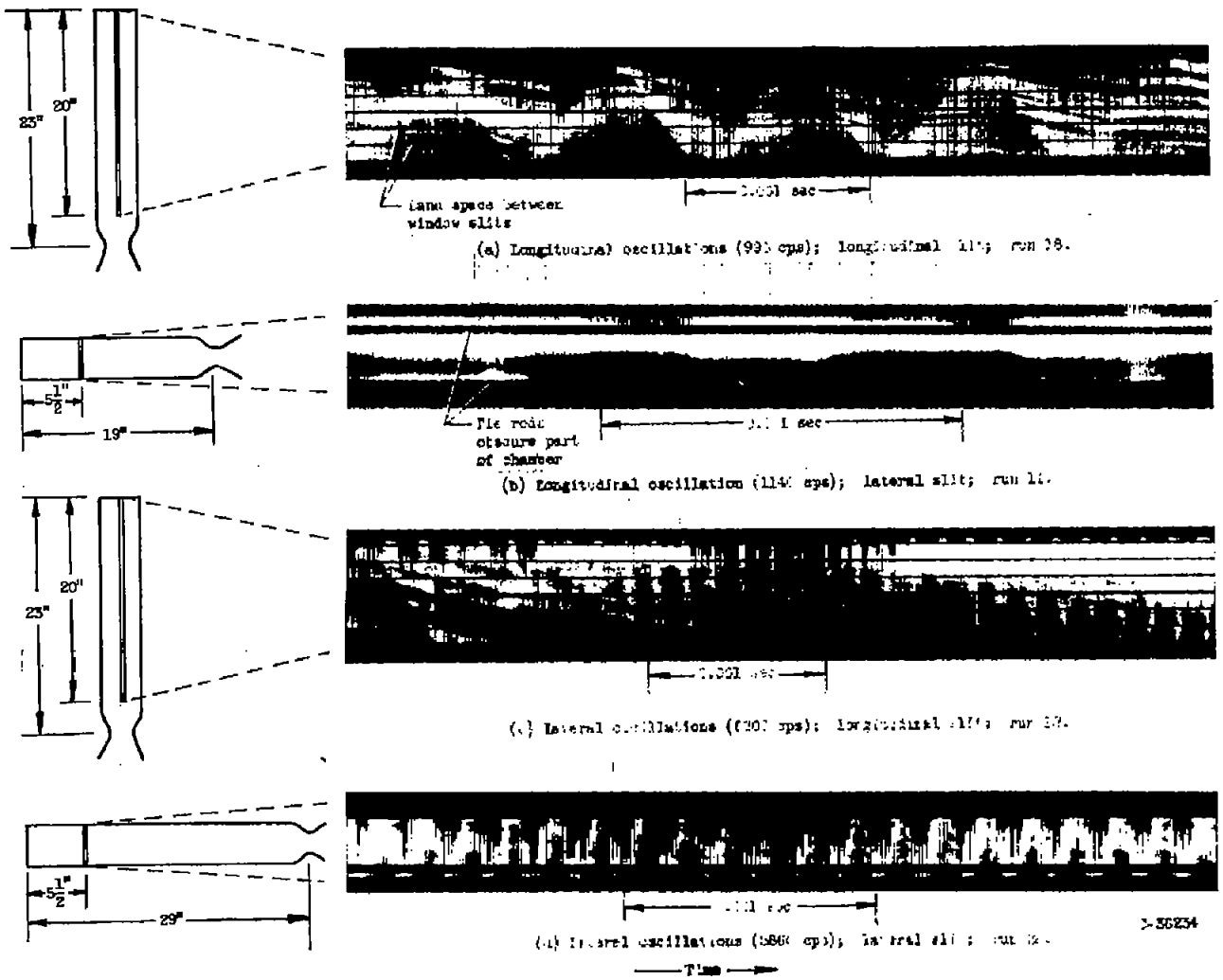

Figure 11. - Streak photographs showing screaming combustion oscillations of 1000-pound-thrust rocket engine using WFNA and JP-4 fuel as propellants.

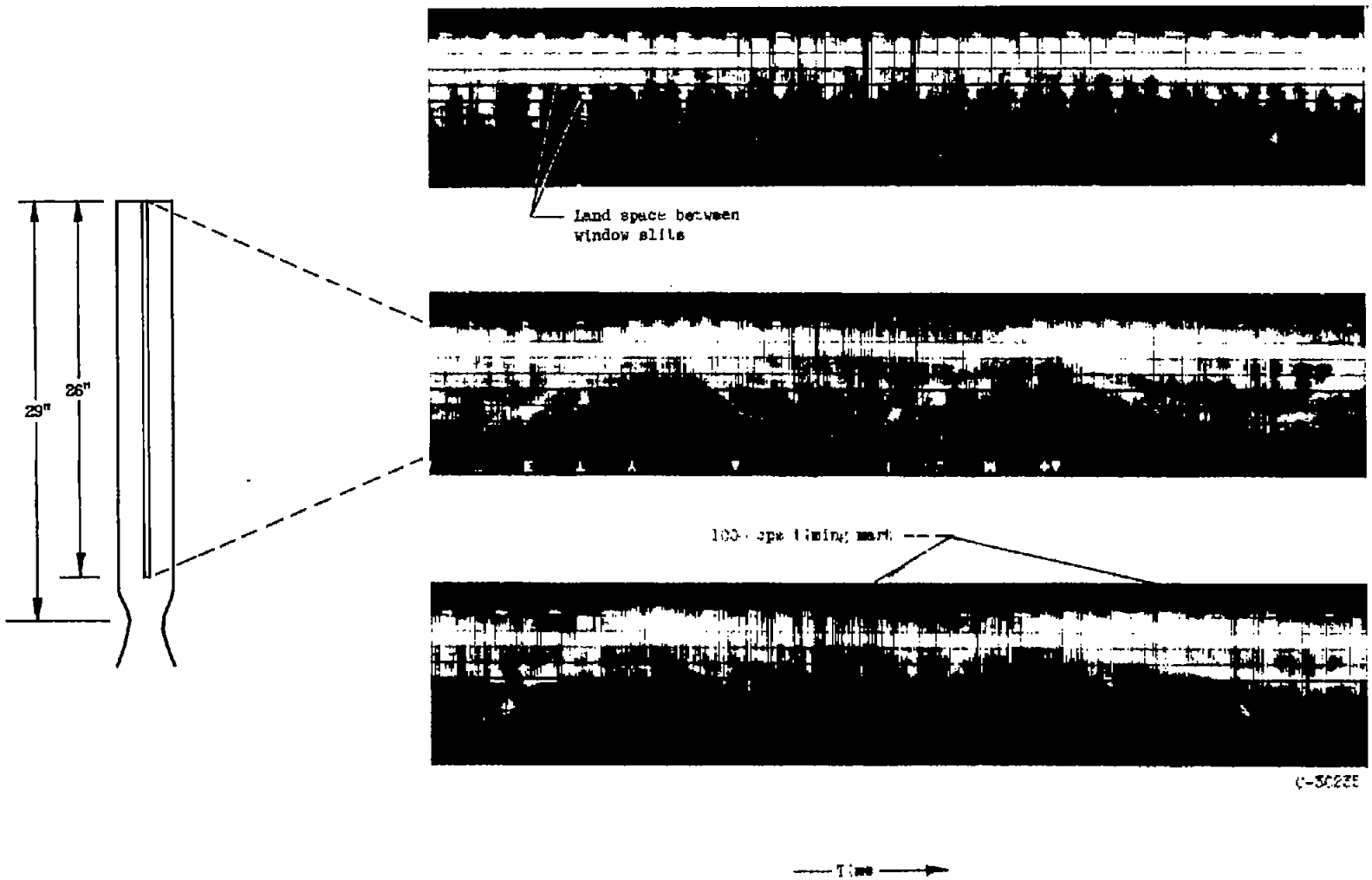

Figure 12. - Streak photographs showing interaction of lateral and longitudinal oscillations of combustion in 1000-pound-thrust rocket engine using WFNA and JP-4 fuel as propellants; run 29.

NACA-Langley - 8-19-54 - 350