Library
R.A. 1368

UNCLASSIFIED

CONFIDENTIAL

7 OCT 1947
CLASSIFICATION CHANGED
To UNCLASSIFIED
By authority of H. L. Dryden Date 6-5-53
per NACA Release form #1446. By HAR, 7-21-53.

NACA

RESEARCH MEMORANDUM

for the

Bureau of Aeronautics, Navy Department

ACCELERATION MEASUREMENTS DURING LANDINGS OF A $\frac{1}{5.5}$-SIZE DYNAMIC MODEL OF THE COLUMBIA XJL-1 AMPHIBIAN IN SMOOTH WATER AND IN WAVES - LANGLEY TANK MODEL 208M - TED NO. NACA 2336

By

Eugene P. Clement and Robert F. Havens

Langley Memorial Aeronautical Laboratory
Langley Field, Va.

CLASSIFIED DOCUMENT

This document contains classified information affecting the National Defense of the United States within the meaning of the Espionage Act, USC 50:31 and 32. Its transmission or the revelation of its contents in any manner to an unauthorized person is prohibited by law. Information so classified may be imparted only to persons in the military and naval services of the United States, appropriate civilian officers and employees of the Federal Government who have a legitimate interest therein, and to United States citizens of known loyalty and discretion who of necessity must be informed thereof.

[redacted]

NATIONAL ADVISORY COMMITTEE FOR AERONAUTICS

WASHINGTON

SEP 25 1947

CONFIDENTIAL

UNCLASSIFIED

NACA LIBRARY
LANGLEY MEMORIAL AERONAUTICAL LABORATORY
Langley Field, Va.

3 1176 01437 5209

NATIONAL ADVISORY COMMITTEE FOR AERONAUTICS

RESEARCH MEMORANDUM

for the

Bureau of Aeronautics, Navy Department

ACCELERATION MEASUREMENTS DURING LANDINGS OF A $\frac{1}{5.5}$-SIZE DYNAMIC MODEL OF THE COLUMBIA XJL-1 AMPHIBIAN IN SMOOTH WATER AND IN WAVES - LANGLEY TANK MODEL 208M - TED NO. NACA 2336

By Eugene P. Clement and Robert F. Havens

SUMMARY

A $\frac{1}{5.5}$-size powered dynamic model of the Columbia XJL-1 amphibian was landed in Langley tank no. 1 in smooth water and in oncoming waves of heights from 2.1 feet to 6.4 feet (full-size) and lengths from 50 feet to 264 feet (full-size).

The motions and the vertical accelerations of the model were continuously recorded. The greatest vertical acceleration measured during the smooth-water landings was 3.1g. During landings in rough water the greatest vertical acceleration measured was 15.4g for a landing in 6.4-foot by 165-foot waves. The impact accelerations increased with increase in wave height and, in general, decreased with increase in wave length. During the landings in waves the model bounced into the air at stalled attitudes at speeds below flying speed. The model trimmed up to the mechanical trim stop (20°) during landings in waves of heights greater than 2.0 feet. Solid water came over the bow and damaged the propeller during one landing in 6.4-foot waves. The vertical acceleration coefficients at first impact from the tank tests of a $\frac{1}{5.5}$-size model were in fair agreement with data obtained at the Langley impact basin during tests of a $\frac{1}{2}$-size model of the hull.

INTRODUCTION

The Columbia XJL-1 airplane is a single-engine amphibian with a design gross load of 13,000 pounds and a wing loading of 31.5 pounds per square foot. This airplane is designed for use by the Navy in air-sea rescue operations, and therefore must be seaworthy and

CONFIDENTIAL

UNCLASSIFIED

structurally satisfactory for landing and take-off in rough water. Tests have been made of a $\frac{1}{5.5}$-size powered dynamic model of the XJL-1 in Langley tank no. 1 to determine the take-off and landing stability and the spray characteristics in smooth water. The results of these tests are described in reference 1. The present tests were made to measure the accelerations experienced by the model during landings in smooth water and in waves, and to determine the landing behavior in rough water. The model was landed in oncoming waves of heights from 2.1 feet to 6.4 feet (full-size) and lengths from 50 feet to 264 feet (full-size). Vertical accelerations were measured, but attempts to measure the horizontal and angular accelerations were not successful because of failure of the instruments. The vertical accelerations experienced by the model when it was dropped into the water at zero forward speed and the static displacement properties were also determined.

These tests were requested by the Bureau of Aeronautics, Navy Department.

THE MODEL

The model (Langley tank model 208M) was a $\frac{1}{5.5}$-size powered dynamic model designed and constructed by the Columbia Aircraft Corporation. The general arrangement is shown in figure 1 and the principal dimensions of the model and full-size aircraft are given in table I. The body plan of the hull is shown in figure 2. A detailed description of the model is given in reference 1.

The horizontal tail was not to scale, the area having been increased 27.5 percent over the corresponding full-size value to obtain adequate aerodynamic longitudinal stability for the model. This increase was accomplished by the addition of panels of the same airfoil section to the tips of the stabilizer, as shown in figure 1.

In order to provide clearance between model and towing gear, the propeller diameter was 3.4 inches less than that corresponding to full-size. Slats were attached to the leading edge of the wing to delay the stall and to increase the maximum lift coefficient.

The gross weight of the model was 77.4 pounds, corresponding to the full-size maximum design load of 13,000 pounds. The center of gravity for all of these tests was at 28-percent mean aerodynamic chord and the flaps were set at 45°. Static thrust used in the landing investigation was 15 pounds (approximately one-half static

thrust used for take-off investigation). The pitching moment of inertia about the center of gravity was 4.9 slug-feet^2, which is approximately 25 percent greater than that corresponding to the full-size.

APPARATUS AND PROCEDURE

The towing gear used in these tests is similar to that described in reference 8, and the instrumentation and general test procedure are described in reference 3. Trim was measured as the angle between the forebody keel at the step and the horizontal. The specific weight of the water in the tank was 63.4 pounds per cubic foot for these tests.

Landings were made at various trims and flight-path angles in smooth water and in oncoming waves of several lengths and heights (up to and including 6.4 feet, full-size). The fore and aft freedom of the towing gear (reference 3) allowed the model to check in waves so that it was practically free of longitudinal restraint during that part of the run-out which was of most interest. The model had freedom in trim from -12° to approximately 20°. Freedom in rise was adequate to prevent interference of the rise stop with the motion of the model.

The landings were made by decelerating the carriage from a speed above the landing speed of the model. The rate of deceleration during landing and run-out was approximately 3 feet per second per second. The trim was set in the air by means of the elevators; and since the trim decreased as the model approached the water, it was necessary to set the trim in the air several degrees higher than the desired landing trim. The deflection of the elevators was not changed during the run-out. The model speeds, at contact, corresponded to full-size speeds between 52 and 71 miles per hour.

The instruments described in reference 3 were used to record the results of the tests. Time histories of vertical acceleration, trim, rise, horizontal displacement, and horizontal velocity of the model were obtained. Metal contacts on the keel of the model, at the bow, step, and sternpost were used to record electrically the instant of landing contact. The location of the bow contact is shown in figure 1.

An inductance-type accelerometer, which was attached to the towing staff, was used to measure the vertical accelerations. This accelerometer, which is described in reference 3, had a natural frequency of about 70 cycles per second and was magnetically damped to about 0.7 of the critical value.

The waves were generated in the manner described by reference 3. The length and regularity of the waves were determined by means of two streamlined struts which extended vertically into the water from the towing carriage. The struts were located about 17 feet apart in the longitudinal direction. The relative wave height at each of the struts was electrically recorded, and from the records the wave lengths could be determined.

The static displacement properties of the model were determined by loading the model with a series of weights and moments and noting the trim and draft for each condition. The moments were measured with respect to the pivot (located at 28-percent mean aerodynamic chord) and draft was taken as the vertical displacement of the pivot from its position when the forebody keel was parallel to and just touching the still-water surface.

The drop test consisted of dropping the model into the water at zero forward velocity from two heights of the pivot above the water and at several trims. The motions and accelerations were recorded with the same instruments used in the landings. The model was restrained in the fore and aft position but was free to rise and trim. Drops were made from pivot heights above the water of 20.36 inches and 27.28 inches, respectively. At zero trim, these pivot heights corresponded to keel heights above the water of 6.92 inches (1/2 beam) and 13.84 inches (1 beam). Data were obtained at contact trims from -1.0° to 15.4°.

PRECISION OF DATA

The data presented are believed to have the following over-all accuracy:

Trim, degree	±1
Landing speed, foot per second	±1
Flight-path angle, degree	±0.2
Vertical acceleration	±(10 percent + 0.2g)

RESULTS AND DISCUSSION

All values in the tables and graphs are full-scale values. The following symbols are used:

g acceleration of gravity, 32.2 feet per second per second

n_v vertical acceleration, g

V_h horizontal velocity (carriage speed), feet per second

γ flight-path angle, degrees

τ trim (angle between forebody keel at step and the horizontal), degrees

The results of the smooth-water landing tests are presented in table II. The flight-path angle, horizontal velocity, and trim were determined for the instant the model touched the water. The maximum vertical accelerations occurred on initial impact for all except one landing. For the landing at 0° trim the model skipped one time and the maximum vertical acceleration occurred on the second impact. The greatest value of vertical acceleration obtained, 3.1g, occurred during this landing.

Time histories of two of the landings in waves are shown in figure 3. The results of all the rough-water landings are given in table III. Flight-path angle, horizontal velocity, and trim were determined for the instant of first contact and for the subsequent contact which produced the maximum vertical acceleration. The model invariably bounced clear of the water several times during each landing in waves and thus experienced a series of impacts of varying magnitude. In each case, the maximum vertical acceleration occurred at some impact from the first to the twelfth. The bounces were generally accompanied by large increases in trim, the model attaining a stalled attitude at speeds considerably below flying speed. Table III gives the maximum trim for each landing. The model trimmed up to the mechanical trim stop (20°) during approximately half the landings in 3.4-foot waves and during most of the landings in 4.6-foot and 6.4-foot waves.

Figure 4 is a plot of maximum vertical accelerations against wave lengths for the different wave heights. In general, these accelerations decreased with increase in wave length. The accelerations increased rapidly with increase in wave height. The greatest vertical acceleration measured during the tests was 15.4g, and was obtained during a landing in 6.4-foot by 165-foot waves.

Some of the rough-water landings were quite violent and resulted in structural damage to the model. During the landings in 4.6-foot by 110-foot waves the motions of the model were particularly violent and heavy spray struck the flaps and horizontal tail. Of the four landings made in these waves, three resulted in failure of the horizontal tail surfaces. During a landing in 6.4-foot by 138-foot waves,

water came over the bow and bent the tips of the propeller blades. Figure 5 is a photograph of the damage resulting from this landing.

No attempt was made to control the position on the wave profile at which the initial contact with the wave occurred. Consequently, the values of the impact accelerations on initial contact varied widely and landings on the wave crests gave lowest values. No correlation of the values of subsequent accelerations with initial landing conditions was possible.

The results of tests of a $\frac{1}{2}$-size model of the hull of this aircraft in the Langley impact basin are described in reference 4. Results from the free-to-trim test of reference 4 are presented in table IV for comparison with vertical accelerations at initial impact obtained in the tests of Langley tank model 208M. The impact-basin data were taken in smooth water and in 120-foot waves of varying heights, at speeds corresponding to a full-size landing speed of 86 miles per hour. The accelerations presented are those which were measured at initial impact. The landings of the dynamic model 208M were made with one-half take-off thrust and with flaps deflected 45°. The model speeds, at contact, corresponded to full-size speeds between 52 and 74 miles per hour. The data from the impact-basin tests and from model 208M tests are plotted in figure 6 in the form of vertical acceleration coefficient versus flight-path angle. It can be seen that the two sets of data are fairly well defined by the same upper envelope curves.

The static properties are presented in figure 7 where trim and draft are plotted against trimming moment for the different loads tested. The results of the drop test are presented in table V. The greatest vertical acceleration obtained from the drop tests was 6.7g for a drop height of 1 beam and a contact trim of -1.0°.

CONCLUSIONS

1. The greatest vertical acceleration encountered during the smooth-water landings was 3.1g.

2. The model experienced a number of impacts during each rough-water landing and the maximum vertical acceleration occurred at some impact from the first to the twelfth. The greatest vertical acceleration encountered was 15.4g for a landing in 6.4-foot by 165-foot waves. The impact accelerations increased with increase in wave height and, in general, decreased with increase in wave length.

3. During the landings in waves the model bounced into the air at stalled attitudes at speeds below flying speed. The model trimmed up to the mechanical trim stop (20°) during landings in waves of heights greater than 2.1 feet.

4. Solid water came over the bow during one landing in 6.4-foot by 138-foot waves and damaged the propeller.

5. A comparison of the vertical acceleration coefficients at first impact from the tank tests of a $\frac{1}{5.5}$-size model and from impact-basin tests of a $\frac{1}{2}$-size model of the hull showed that the upper limits of the two sets of data are in fair agreement.

Langley Memorial Aeronautical Laboratory
National Advisory Committee for Aeronautics
Langley Field, Va.

Eugene P. Clement
Naval Architect

Eugene P. Clement
for
Robert F. Havens
Aeronautical Engineer

Approved: John B. Parkinson
John B. Parkinson
Chief of Hydrodynamics Division

ESY

REFERENCES

1. Havens, Robert F.: Tank Tests of a 1/5.5-Scale Powered Dynamic Model of the Columbia XJL-1 Amphibian - Langley Tank Model 208. TED No. NACA 2336. NACA RM No. L6I20, Bur. Aero., 1946.

2. Parkinson, John B., and Olson, Roland E.: Tank Tests of a 1/5 Full-Size Dynamically Similar Model of the Army OA-9 Amphibian with Motor-Driven Propellers - NACA Model 117. NACA ARR, Dec. 1941.

3. Benson, James M., Havens, Robert F., and Woodward, David R.: Landing Characteristics in Waves of Three Dynamic Models of Flying Boats. NACA RM No. L6L13, 1946.

4. Steiner, Margaret F., and Miller, Robert W.: Water Loads on the XJL-1 Hull as Obtained in Langley Impact Basin - TED No. NACA 2413.3. NACA RM No. L6I03, Bur. Aero., 1946.

TABLE I

COMPARISON OF PRINCIPAL DIMENSIONS OF $\frac{1}{5.5}$-SIZE DYNAMIC MODEL

AND FULL-SIZE COLUMBIA XJL-1 AIRPLANE

	Model 208M	Full-size
Hull:		
Beam, including plating projecting from chines, in.	13.84	76.0
Lengths parallel to straight portion of forebody keel, in.		
Forebody, bow to centroid of step	41.69	229.3
Afterbody, centroid of step to sternpost	36.27	199.5
Tail extension, sternpost to trailing edge of rudder	18.18	100.0
Over all, bow to trailing edge of rudder	96.14	528.8
Depth of step (plan form 45° vee), in.		
At keel	1.14	6.27
At centroid	0.93	5.11
At chine	1.44	7.98
Angle of forebody keel relative to base line, deg	-5.0	-5.0
Angle of afterbody keel relative to base line, deg	12.5	12.5
Angle between keels, deg	7.5	7.5
Angle of dead rise of forebody at step, deg		
Excluding chine flare	20.0	20.0
Including chine flare	13.5	13.5
Angle of dead rise of afterbody, deg		
Step at station 233	24.0	24.0
Maximum at station 315	29.5	29.5
At sternpost	20.0	20.0
Wing:		
Area, sq ft	13.65	413.0
Span, ft	9.1	50.0
Root chord (section NACA 4418), in.	20.0	110.0
Tip chord (section NACA 4412), in.	12.0	66.0
Angle of wing setting, deg		
Reference to base line	4.0	4.0
Reference to forebody keel	9.0	9.0
Mean aerodynamic chord, M.A.C., in.	18.39	101.17
Leading-edge M.A.C. parallel to base line		
Aft of bow, in.	32.02	176.1
Below thrust line, in.	2.82	15.5
Flap setting, deg		
Take-off	30	
Landing	45	

National Advisory Committee for Aeronautics

TABLE I - Concluded

COMPARISON OF PRINCIPAL DIMENSIONS OF $\frac{1}{5.5}$-SIZE DYNAMIC MODEL - Concluded

	Model 208M	Full-size
Horizontal tail:		
Span, ft	[a]4.64	20.0
Chord (section NACA 0012), ft	0.91	5.0
Area, stabilizer, sq ft	[a]2.94	61.3
Area, elevator, sq ft	1.27	38.7
Total area, sq ft	[a]4.21	100.0
Angle of stabilizer to base line, deg	-2.0	-2.0
Vertical tail:		
Total area (section NACA 0012), sq ft	1.25	38.2
Propeller:		
Blades	3	3
Diameter, ft	[a]1.62	10.5
Angle of thrust line to base line, deg	0	0
Thrust line above keel at centroid of step perpendicular to base line, in.	17.4	208.8
Static effective thrust for landing, lb	15.0	
Loading conditions:		
Maximum design load, lb	77.4	13,000
Center of gravity (28-percent M.A.C.)		
Forward of centroid of step parallel to straight portion of forebody keel, in.	3.94	21.7
Above forebody keel perpendicular to straight portion of forebody keel, in.	13.44	74.0
Pitching moment of inertia, slug-ft^2	[a]4.9	19,400

[a]These values not to scale.

NATIONAL ADVISORY
COMMITTEE FOR AERONAUTICS

TABLE II

MAXIMUM VERTICAL ACCELERATIONS DURING LANDINGS IN SMOOTH WATER

[All values are full-scale]

Landing no.	First contact			Maximum n_v (g)
	γ (deg)	V_h (fps)	τ (deg)	
1	3.6	79	4.0	1.2
2	2.6	81	12.0	1.4
3	2.8	87	10.6	1.5
4	6.1	80	12.2	2.8
5	2.3	100	9.9	1.5
6	5.1	98	.7	1.8
7	4.7	95	6.0	1.2
8	5.0	96	3.0	1.2
9	4.3	104	0	[a]3.1
10	4.8	91	9.0	1.6

[a]Maximum n_v occurred after one skip (second impact).

NATIONAL ADVISORY
COMMITTEE FOR AERONAUTICS

[redacted]

TABLE III

MAXIMUM VERTICAL ACCELERATIONS DURING LANDINGS IN WAVES

[All values are full-scale]

Landing no.	Wave height (ft)	Wave length (ft)	First contact			Contact for maximum n_v			Maximum n_v (g)	Maximum τ (deg)
			γ (deg)	V_h (fps)	τ (deg)	γ (deg)	V_h (fps)	τ (deg)		
11	2.1	50	3.4	93	10.7	2.6	82	7.4	3.6	15.6
12	2.1	50	6.3	92	12.0	4.1	73	6.9	7.5	19.0
13	2.1	50	3.7	94	3.2	4.7	67	7.4	5.5	17.9
14	2.1	50	4.9	88	3.5	6.9	79	8.3	7.2	20
15	2.1	66	2.5	81	6.6	10.2	53	2.4	6.0	16.4
16	2.1	66	2.0	88	10.7	10.5	57	7.5	8.1	17.8
17	2.1	66	3.5	85	3.8	7.0	66	6.4	3.8	19.1
18	2.1	66	2.8	85	4.0	8.0	74	6.4	8.0	18.0
19	2.1	82	2.0	79	11.9	9.0	58	10.3	3.5	18.0
20	2.1	82	2.6	79	8.9	3.7	78	2.4	4.2	18.6
21	2.1	82	3.3	81	2.2	9.3	66	3.3	7.6	17.7
22	2.1	82	2.9	82	6.2	8.2	70	11.5	6.2	18.3
23	2.1	110	2.6	84	8.4	10.3	44	6.2	3.4	18.3
24	2.1	110	2.3	88	13.7	8.5	68	6.2	6.4	19.1
25	2.1	110	3.5	87	2.6	7.2	80	8.4	4.2	19.5
26	2.1	110	3.4	86	2.0	5.7	73	5.6	4.5	18.0
27	2.1	110	2.1	85	9.7	9.4	68	4.6	4.4	18.6
28	2.1	110	3.0	90	12.9	10.9	47	6.0	3.3	18.6
29	2.1	110	2.8	86	3.3	9.4	68	6.6	4.5	18.3
30	2.1	110	3.0	89	4.7	7.4	71	4.7	3.4	18.3
31	2.1	165	1.8	88	12.8	8.4	63	5.6	3.4	17.3
32	2.1	165	3.0	86	9.2	10.2	60	2.3	4.3	17.3
33	2.1	165	4.8	85	4.3	7.4	76	4.2	4.0	17.3
34	2.1	165	3.6	85	2.8	9.9	82	-.6	4.7	17.6
35	3.4	66	2.6	97	14.8	9.5	65	----	8.1	20
36	3.4	66	4.2	102	11.4	13.3	61	----	12.3	20
37	3.4	66	4.5	96	7.7	7.3	76	4.6	8.7	16.8
38	3.4	66	3.6	93	6.0	6.5	85	9.0	8.5	20
39	3.4	82	2.4	78	13.1	5.5	68	7.2	6.8	16.8
40	3.4	82	2.1	77	10.2	10.0	52	11.3	6.2	18.6
41	3.4	82	2.9	76	6.8	7.9	67	10.2	8.7	18.2
42	3.4	82	3.7	77	6.9	9.9	54	11.8	6.4	20
43	3.4	110	2.7	84	10.0	10.4	67	11.3	5.3	20
44	3.4	110	1.6	86	8.4	15.2	38	7.4	6.4	20
45	3.4	110	4.3	85	3.0	11.6	48	6.6	5.9	20
46	3.4	110	2.2	86	5.5	11.0	62	3.0	6.2	19.5
47	3.4	110	2.3	83	14.1	7.9	66	5.0	7.7	20
48	3.4	110	3.3	78	3.4	8.1	64	7.9	5.9	15.5
49	3.4	110	2.0	90	13.3	15.2	45	5.5	6.2	20
50	3.4	110	3.3	85	8.4	8.8	69	8.9	6.5	17.7
51	3.4	165	1.6	84	10.9	12.7	52	1.4	5.8	20
52	3.4	165	4.5	88	16.0	9.9	55	6.2	5.7	18.2
53	3.4	165	2.0	89	13.2	10.8	60	2.0	4.5	17.7
54	3.4	165	2.6	84	7.5	13.8	54	5.6	5.1	18.9
55	4.6	110	2.0	101	15.6	7.0	84	8.7	11.2	20
56	4.6	110	2.3	86	10.8	7.6	79	14.1	11.0	20
57	4.6	110	3.2	90	10.2	15.2	44	2.0	8.0	20
58	4.6	110	4.5	95	1.7	14.4	46	14.4	12.3	20
59	4.6	138	2.2	95	16.0	17.2	43	5.0	7.4	20
60	4.6	138	2.3	95	16.0	11.0	54	6.4	9.7	20
61	4.6	138	1.8	95	15.9	7.2	85	13.5	6.6	20
62	4.6	138	1.[illegible]	98	14.7	15.8	49	7.3	8.2	20
63	4.6	138	4.3	97	----	9.2	73	-----	9.3	20
64	4.6	138	3.3	89	12.0	17.2	46	9.6	9.2	20
65	4.6	165	2.0	88	13.9	10.4	61	4.0	7.7	20
66	4.6	165	----	----	14.0	10.2	58	4.8	6.3	20
67	4.6	165	2.5	93	18.0	12.7	51	11.3	8.7	20
68	4.6	165	1.5	92	16.1	9.5	65	8.0	9.5	20
69	4.6	165	3.0	88	5.2	12.4	59	7.5	7.3	20
70	4.6	165	3.2	96	13.3	10.8	62	-----	9.5	20
71	4.6	220	1.2	89	14.4	7.7	76	9.0	6.5	20
72	4.6	220	3.0	93	16.6	8.7	81	10.8	4.2	20
73	4.6	220	3.0	95	18.3	9.2	70	7.4	7.5	20
74	4.6	220	2.8	89	11.7	8.7	77	9.2	10.0	20
75	4.6	220	5.3	84	-----	13.3	57	6.0	6.2	20
76	4.6	220	4.2	84	17.0	12.8	71	6.0	6.7	18.4
77	4.6	264	----	85	13.0	-----	79	-----	2.6	20
78	4.6	264	----	84	-----	-----	67	-----	5.1	20
79	4.6	264	----	85	13.0	-----	85	-----	6.7	20
80	4.6	264	----	84	-----	-----	66	-----	4.8	20
81	6.4	110	3.4	85	13.0	14.7	55	3.9	10.2	20
82	6.4	110	----	90	14.0	-----	65	13.0	12.2	20
83	6.4	138	5.2	85	13.0	5.2	85	-----	14.4	--------
84	6.4	165	4.6	89	14.6	13.0	60	9.9	15.4	20
85	6.4	165	4.3	94	13.0	16.7	61	8.6	15.1	20
86	6.4	165	----	94	13.0	-----	62	9.9	10.5	20
87	6.4	165	----	91	9.2	-----	80	19.3	12.4	20
88	6.4	192	4.8	86	14.0	14.4	71	-----	8.2	20
89	6.4	192	----	89	10.0	-----	78	-----	7.8	20
90	6.4	192	----	91	----	-----	63	-----	9.3	--------
91	6.4	192	----	89	12.0	-----	74	-----	8.7	--------

[redacted]

NATIONAL ADVISORY
COMMITTEE FOR AERONAUTICS

TABLE IV

VERTICAL ACCELERATIONS AT FIRST IMPACT FROM TANK TESTS

AND IMPACT-BASIN TESTS

[All values are full-scale]

Tank Tests of $\frac{1}{5.5}$-Size Model

(Wave length, 110 ft)

Landing no.	Wave height (ft)	n_v (g)
1	0	1.2
2	0	1.4
3	0	1.5
4	0	2.8
5	0	1.5
6	0	1.8
7	0	1.2
8	0	1.2
9	0	.9
10	0	1.6
23	2.1	1.4
24	2.1	.9
25	2.1	2.1
26	2.1	2.4
27	2.1	.8
28	2.1	1.2
29	2.1	2.0
30	2.1	2.1
43	3.4	.5
44	3.4	1.5
45	3.4	4.5
46	3.4	2.2
47	3.4	.9
48	3.4	3.4
49	3.4	.8
50	3.4	4.6

Impact-Basin Tests of $\frac{1}{2}$-Size Model

(Wave length, 120 ft)

Impact no.	Wave height (ft)	γ (deg)	τ (deg)	n_v (g)
34	0	2.1	7	1.4
36	0	5.3	7	4.7
37	0	5.5	7	5.9
38	0	5.4	7	4.5
47	0	1.9	12	.3
49	0	5.0	12	3.1
30	1.8	2.1	7	2.9
22	2.0	2.2	6.4	4.9
42	2.0	1.9	11.5	2.7
18	3.5	2.1	7	5.2
20	3.5	1.8	6.5	4.4
21	3.5	2.0	7	3.9
41	3.5	1.9	11.2	5.9
45	3.5	1.9	12	6.0
32	3.6	2.0	12	.1

NATIONAL ADVISORY
COMMITTEE FOR AERONAUTICS

TABLE V

MAXIMUM VERTICAL ACCELERATIONS

DURING DROP TESTS

[All values are full-scale]

At release		First contact		Maximum
Pivot height (ft)	τ (deg)	V_v (fps)	τ (deg)	n_v (g)
9.33	1.0	11.3	-0.2	5.1
9.33	6.0	11.6	5.1	4.2
9.33	11.0	12.6	10.3	2.6
9.33	16.0	8.2	15.4	2.2
12.50	1.0	15.2	-1.0	6.7
12.50	2.0	17.6	.6	5.6
12.50	11.0	15.8	9.6	4.0
12.50	16.0	14.9	14.9	2.4

NATIONAL ADVISORY
COMMITTEE FOR AERONAUTICS

[redacted]

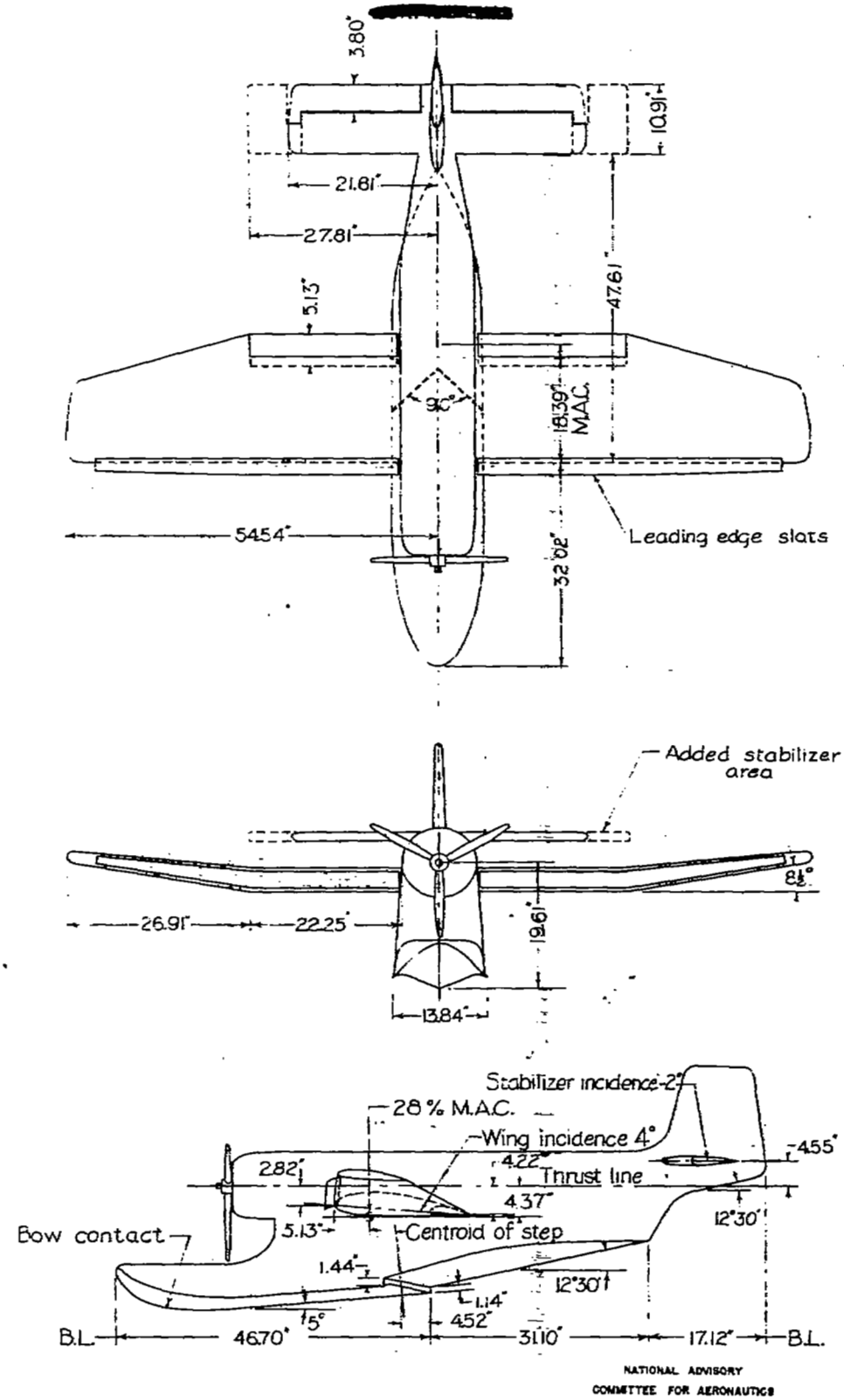

Figure 1.- Model 208M. General Arrangement.

[redacted]

[redacted]

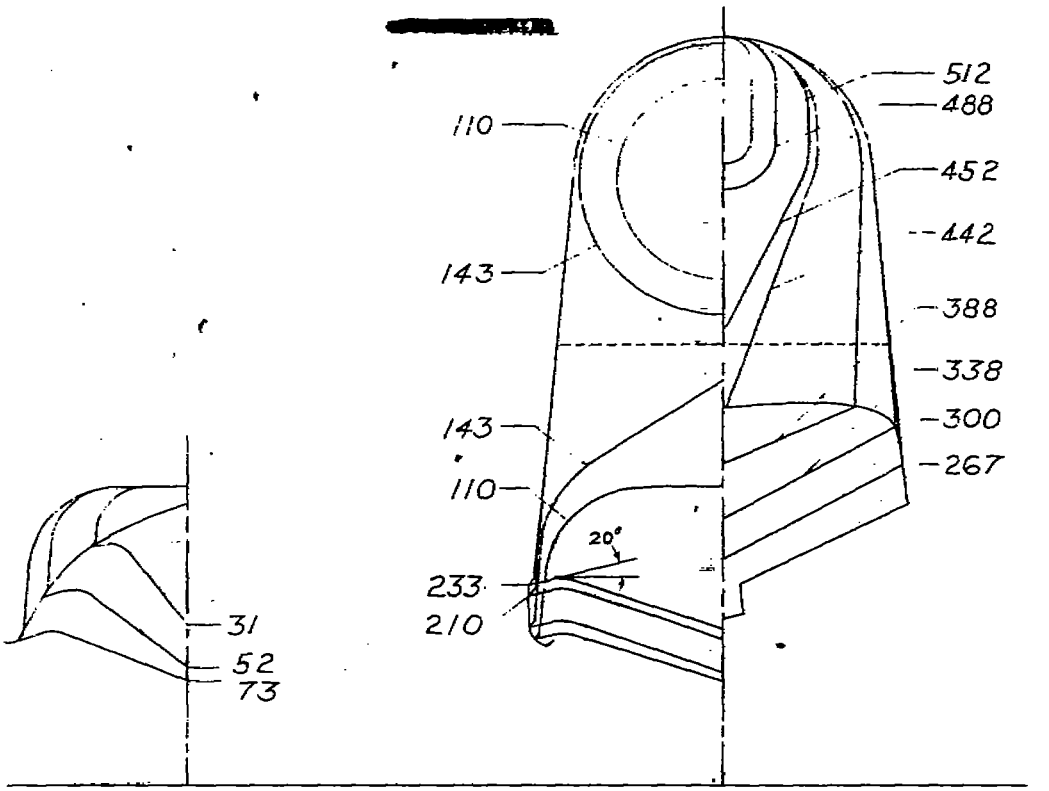

---------- PARTING LINES ON MODEL

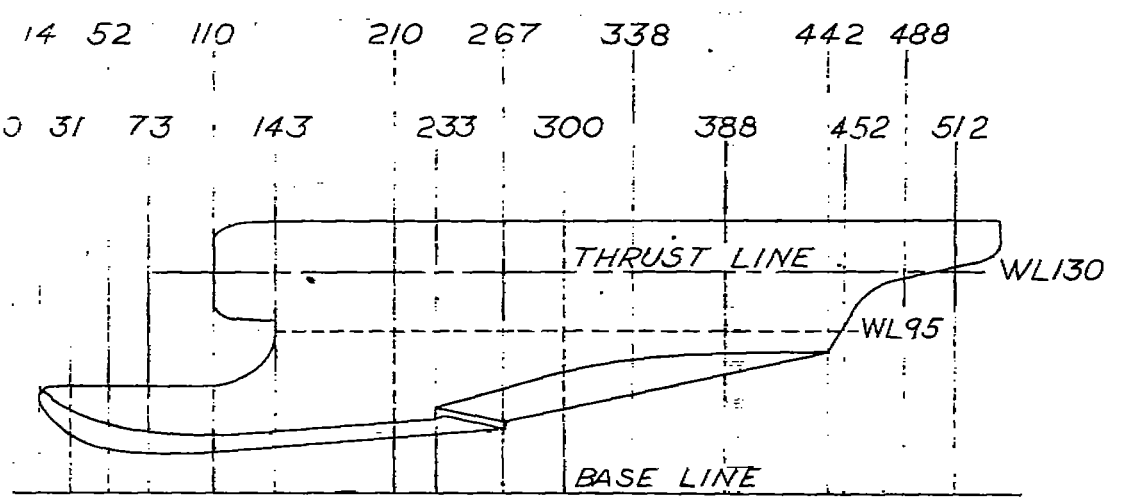

[redacted]

NATIONAL ADVISORY
COMMITTEE FOR AERONAUTICS

FIGURE 2.-MODEL 208M. BODY PLAN.

[redacted]

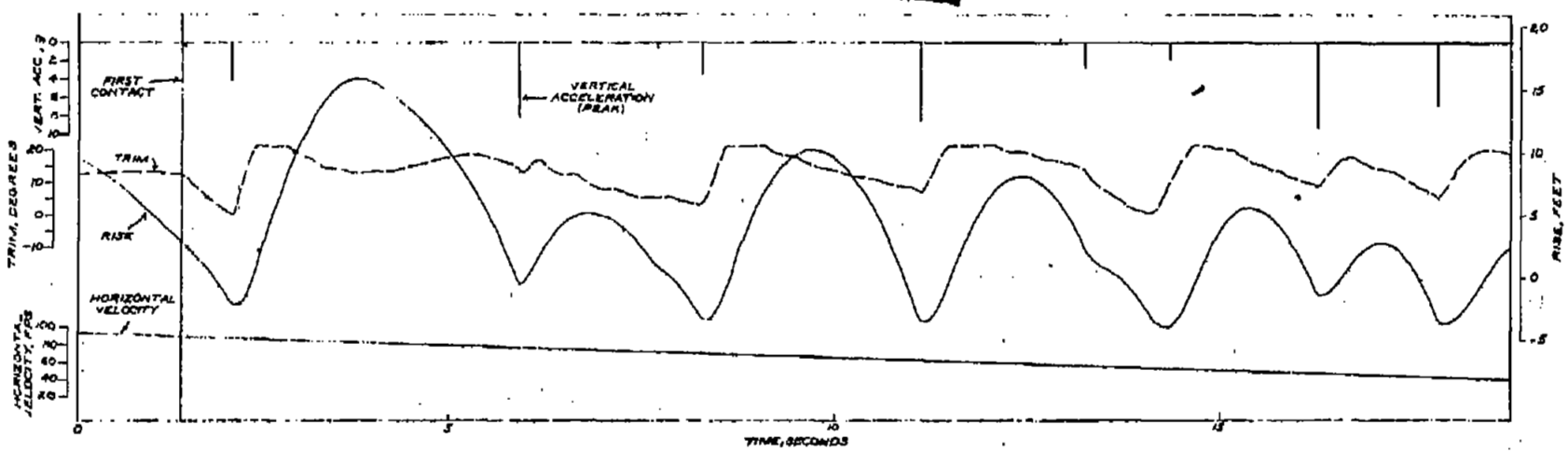

LANDING NO. 64. 4.6FT x 13.5FT WAVES

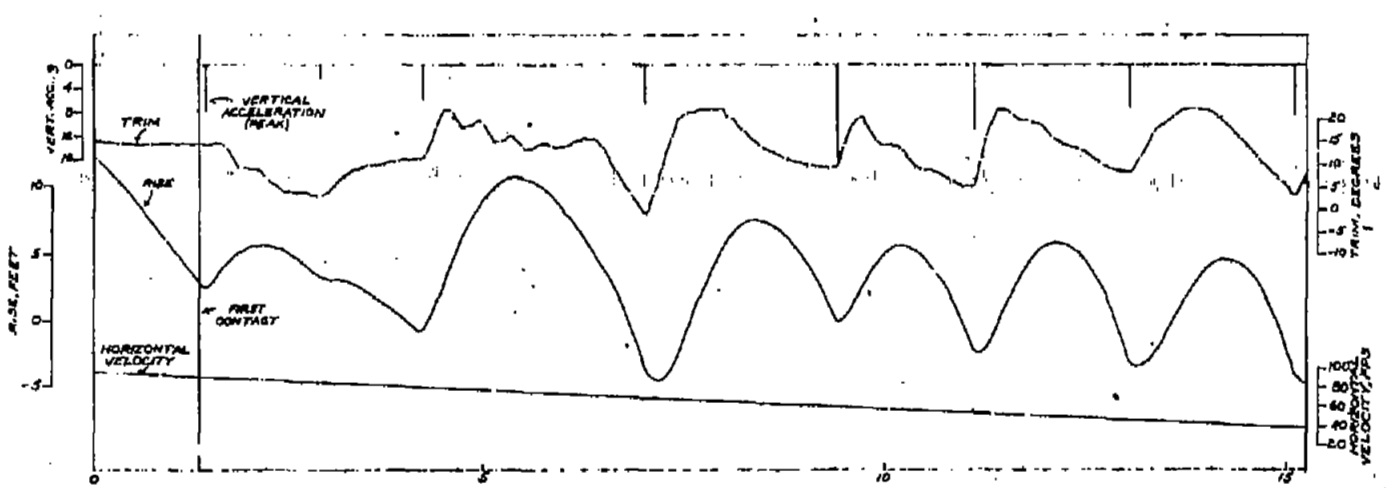

LANDING NO. 64. 6.4FT x 16.5FT WAVES

NATIONAL ADVISORY COMMITTEE FOR AERONAUTICS

FIGURE 3.- TIME HISTORIES OF LANDINGS IN WAVES.
(ALL VALUES ARE FULL-SIZE)

[redacted]

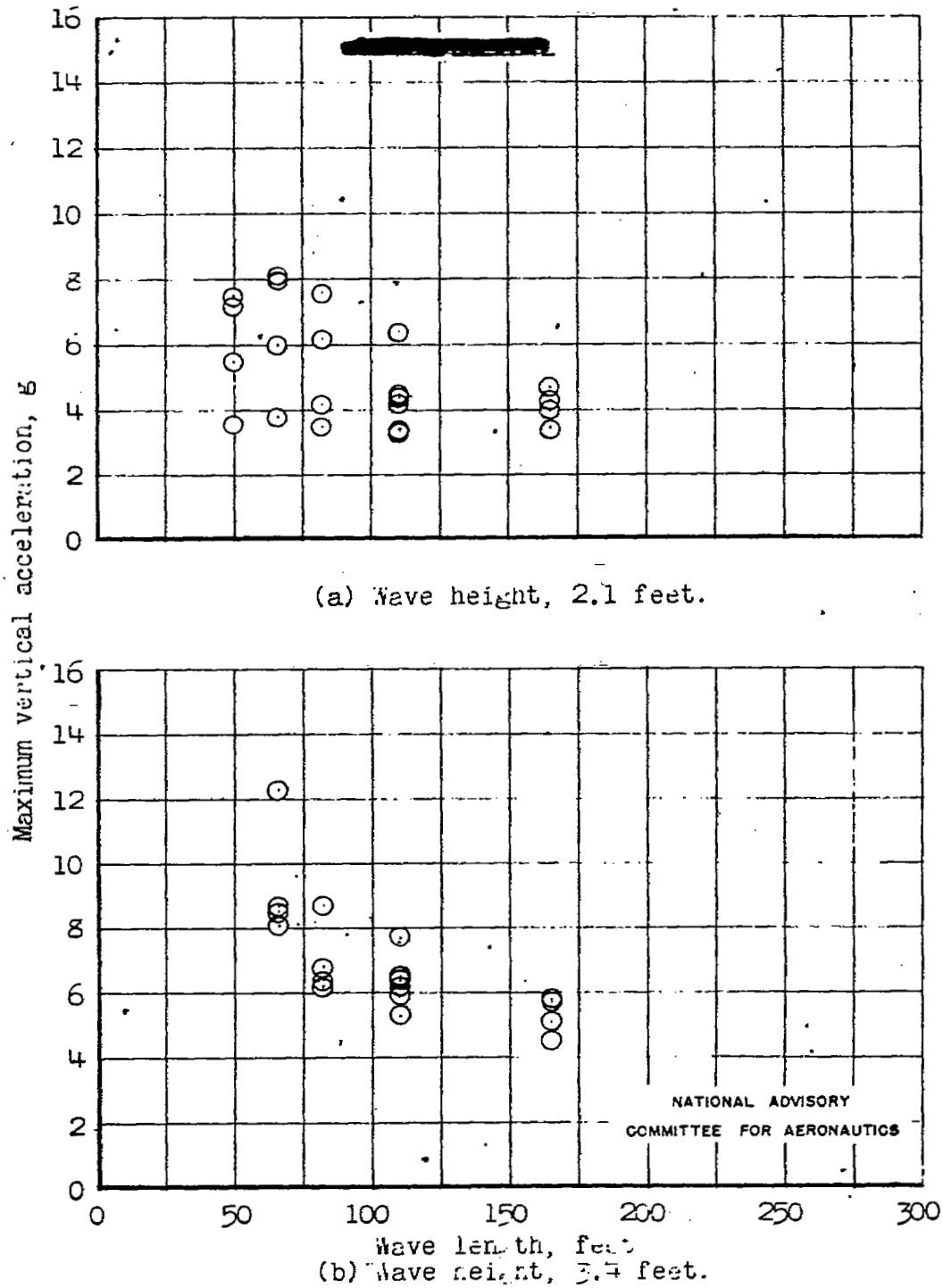

(a) Wave height, 2.1 feet.

Wave length, feet

(b) Wave height, 3.4 feet.

Figure 4.- Maximum vertical accelerations during landings in waves.

[redacted]

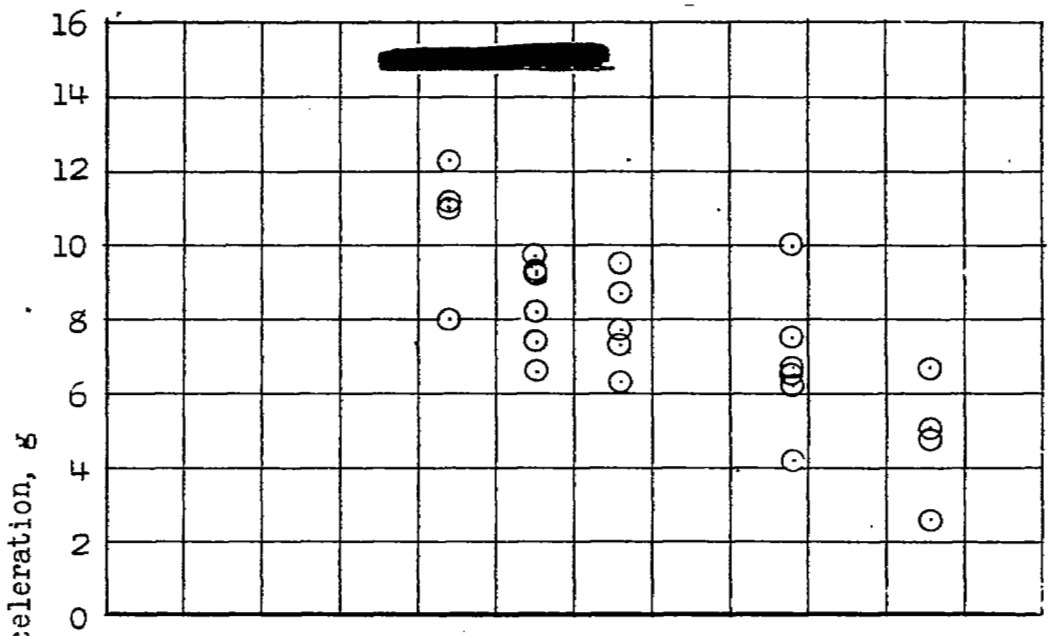

(c) Wave height, 4.6 feet.

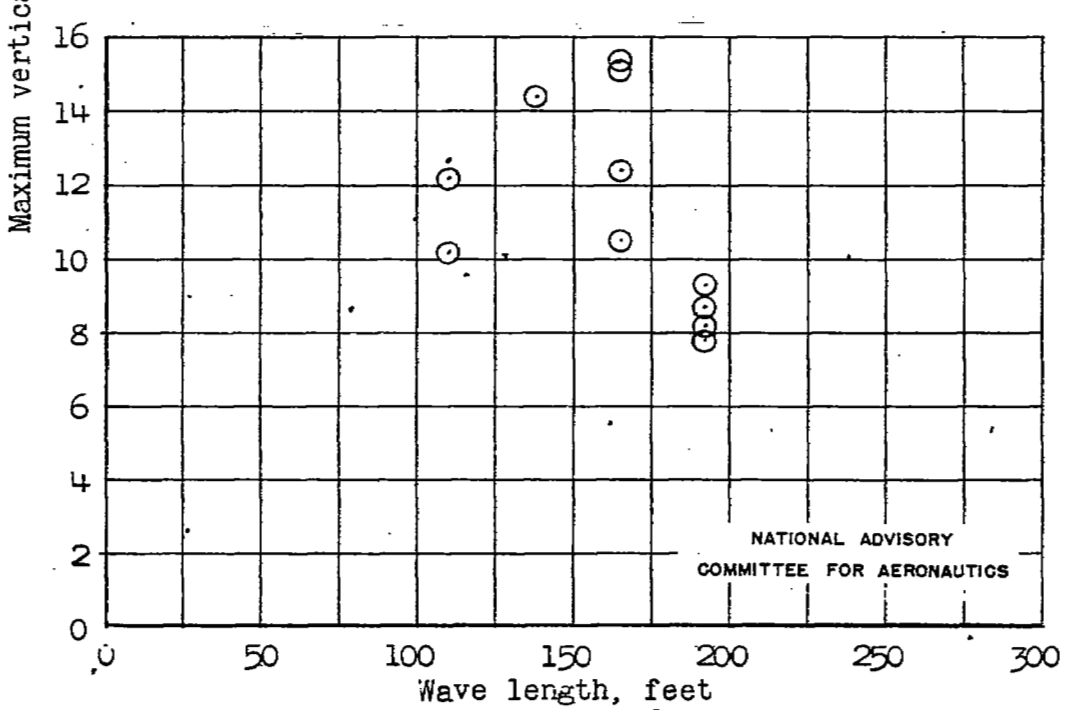

(d) Wave height, 6.4 feet.

Figure 4.- Concluded.

[redacted]

[redacted]

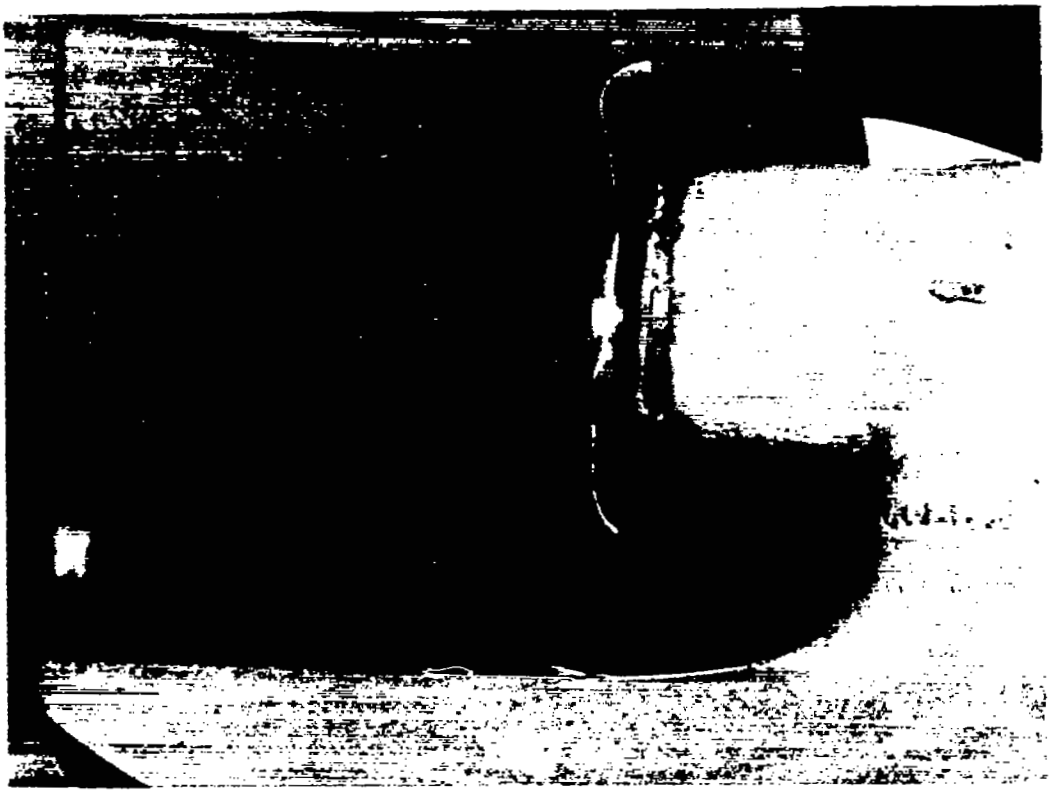

Figure 5.- Damage to propeller during landing in 6.4-foot by 138-foot waves.

NATIONAL ADVISORY COMMITTEE FOR AERONAUTICS
LANGLEY MEMORIAL AERONAUTICAL LABORATORY - LANGLEY FIELD, VA.

[redacted]

[redacted]

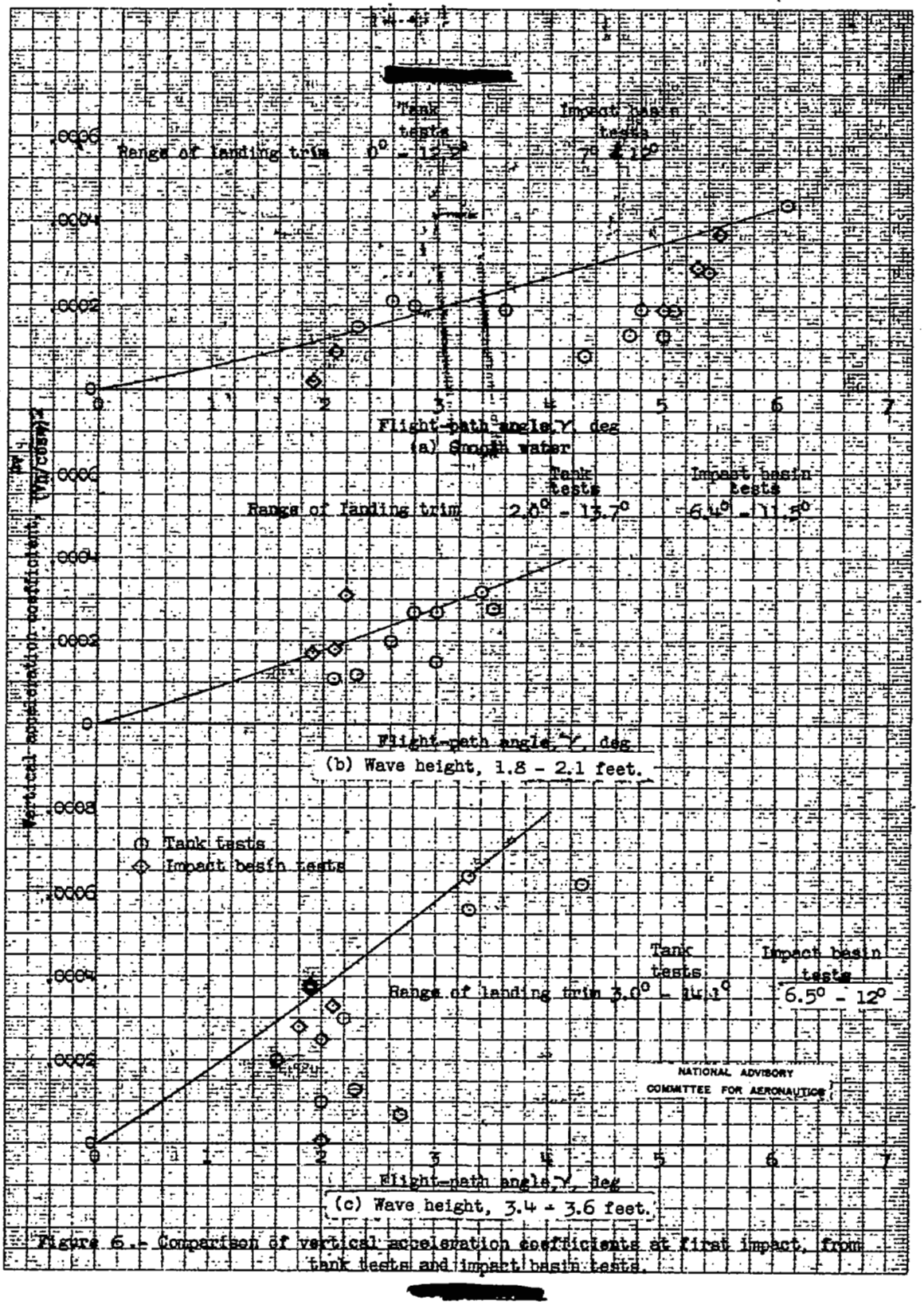

Figure 6.- Comparison of vertical acceleration coefficients at first impact, from tank tests and impact basin tests.

[redacted]

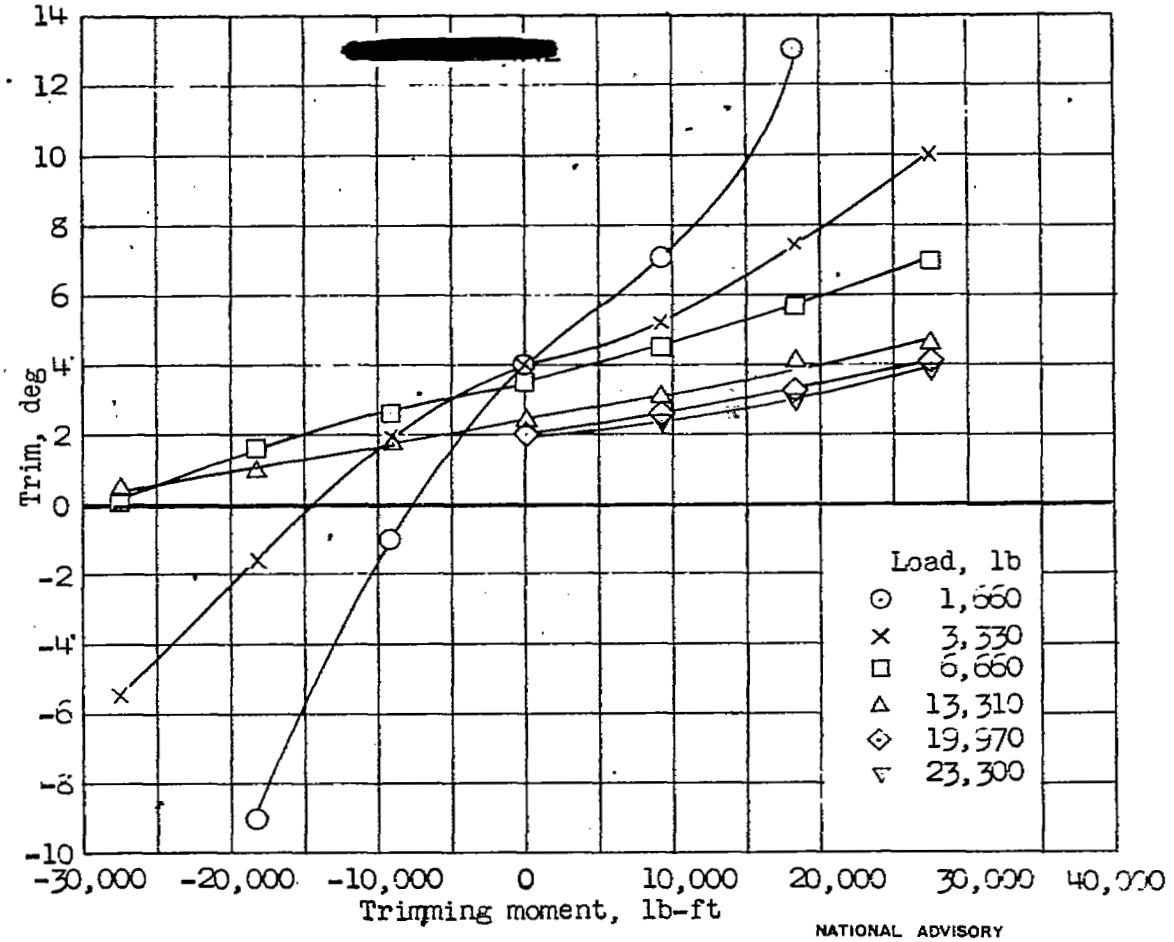

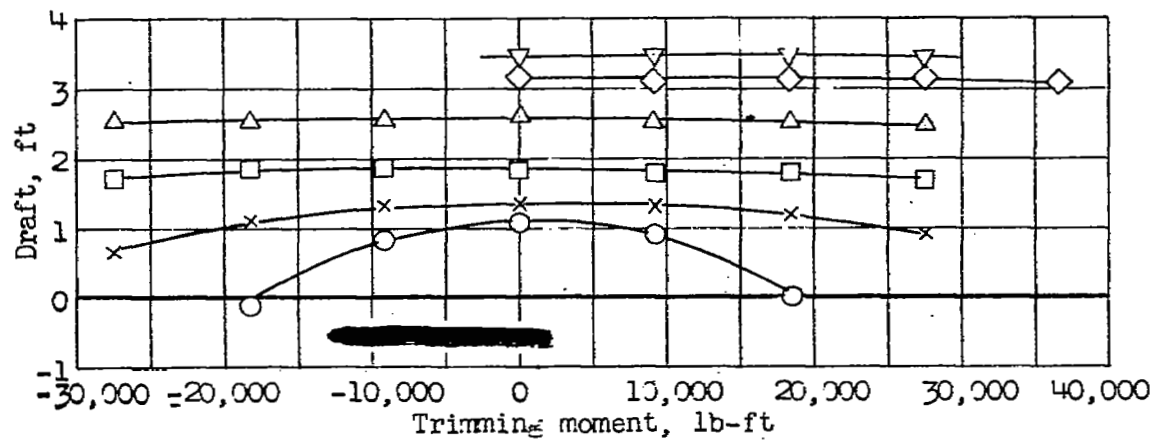

Figure 7.- Static displacement properties.

NASA Technical Library
3 1176 01437 5209