UNCLASSIFIED

~~CONFIDENTIAL~~

Copy 14
RM L50J30

NACA RM L50J30

NACA

RESEARCH MEMORANDUM

FLIGHT INVESTIGATION OF THE EFFECT OF SIDESLIP ON THE PRESSURE AT THE STATIC ORIFICES OF THE BOEING B-29 AIRPLANE

By Robert G. Chilton and B. Porter Brown

Langley Aeronautical Laboratory
Langley Field, Va.

CLASSIFICATION CANCELLED

Authority NACA R7 2586 Date 8/31/54

By MHA 9/15/54

CLASSIFIED DOCUMENT

This document contains classified information affecting the National Defense of the United States within the meaning of the Espionage Act, USC 50:31 and 32. Its transmission or the revelation of its contents in any manner to an unauthorized person is prohibited by law.
Information so classified may be imparted only to persons in the military and naval services of the United States, appropriate civilian officers and employees of the Federal Government who have a legitimate interest therein, and to United States citizens of known loyalty and discretion who of necessity must be informed thereof.

NATIONAL ADVISORY COMMITTEE FOR AERONAUTICS

WASHINGTON
April 11, 1951

~~CONFIDENTIAL~~

UNCLASSIFIED

NASA Technical Library
3 1176 01436 2512

UNCLASSIFIED

NATIONAL ADVISORY COMMITTEE FOR AERONAUTICS

RESEARCH MEMORANDUM

FLIGHT INVESTIGATION OF THE EFFECT OF SIDESLIP ON THE PRESSURE AT THE STATIC ORIFICES OF THE BOEING B-29 AIRPLANE

By Robert G. Chilton and B. Porter Brown

SUMMARY

Flight tests have been conducted to determine the sensitivity to sideslip of the static-pressure orifices of the Boeing B-29 airplane. The purpose of the tests was to determine the errors in indicated altitude and vertical velocity which occur when the airplane experiences oscillations in sideslip on a bombing run. For these tests the measuring instrument was so connected that an average was obtained of the pressures existing at the static orifices which are located on each side of the nose of the fuselage. The tests were conducted at an indicated airspeed of 240 miles per hour and an altitude of 11,000 feet. The sensitivity of the orifices to sideslip was determined by simultaneous measurements of pressure and sideslip angle during pilot-induced, constant-amplitude oscillations in sideslip. These results were checked with measurements obtained from steady sideslips. The amplitude and frequency of oscillations which might be encountered on a bombing run were determined from flight records of a homing run on a radio range station.

The results of the tests show that the pressure measured by the two orifices increased as the square of the angle of sideslip. Theoretical considerations, apparently substantiated by the test results, indicate that the variation with sideslip could be reduced to zero by relocating the static orifices. Since the measured static pressure increased positively with sideslip in either direction, the period of the oscillation in pressure which results from an oscillation in sideslip is one-half the forcing period.

The maximum angle of sideslip recorded during a homing run on a radio range station in relatively smooth air was 2°. The maximum amplitude of sideslip oscillation was $\pm 1^{\circ}$. The static-pressure variations resulting from this amplitude of sideslip were too small to be determined by the measuring instrument which has an uncertainty of ± 0.02 inch

[redacted]

UNCLASSIFIED

of water. On the basis of the sensitivity curve determined from the large-amplitude oscillations it was possible to estimate that an oscillation of $\pm 1^{\circ}$ in angle of sideslip, had it occurred at an altitude of 30,000 feet and an indicated airspeed of 240 miles per hour, would have resulted in an error of approximately ±1 foot per second in indicated vertical velocity. Under the same conditions a 2° angle of sideslip would have caused an error of -4 feet in indicated altitude.

INTRODUCTION

A flight investigation has been conducted to determine the static-pressure errors of the static source of the Boeing B-29 airplane which result from variations in sideslip. The effect of sideslip on normal indications of airspeed, altitude, and rate of climb is expected to be small. However, it is desired to determine whether, in a very sensitive system of pressure measurement, the errors which result from oscillations in sideslip of the airplane on a bombing run would be sufficiently large to cause significant errors in the indications of vertical velocity and change in altitude. The magnitude of the indicated errors would depend upon the sensitivity of the static source to sideslip and upon the amplitude and, in the case of the error in vertical velocity, period of the oscillations which occur.

The sensitivity of the static source to sideslip was determined by simultaneous measurements of pressure and sideslip angle taken in both oscillatory and steady sideslips. A homing run on a radio range station was chosen as the best approximation of a bombing run for the purpose of determining the nature of the sideslip oscillations which might be encountered thereon. From the results of these tests, which were performed at an altitude of 11,000 feet and an indicated airspeed of 240 miles per hour, the errors in vertical velocity and change in altitude can be estimated for other airspeeds and altitudes.

INSTRUMENTATION

The static orifices of the Boeing B-29 airplane are located on each side of the forward section of the fuselage as shown in figure 1. Two of these orifices, one on each side, were connected together to form the static source. The connections are approximately symmetrical and the lag in the tubing is considered negligible for the purposes of the test.

A standard NACA airspeed recorder and NACA recording altimeter were used to determine the conditions of the test. An NACA sideslip-angle

recorder was located on a boom at the left wing tip. An NACA recording accelerometer, located at the airplane center of gravity, measured normal accelerations. Connected to the static source was a recording statoscope. The statoscope consists of a temperature-stabilized case which contains a fixed volume of air connected to one side of a sensitive differential-pressure cell, the other side of which is connected to the static source. A valve, bypassing the cell, permits the air volume to be stabilized at any reference pressure and sealed. The instrument then measures deviations of the external pressure from the reference.

The statoscope has an uncertainty of ±0.02 inch of water which, when zeroed at 11,000 feet, is the equivalent of an uncertainty of ±2.0 feet in indicated changes in altitude. The uncertainty of the recording accelerometer is ±0.01 g units and that of the sideslip-angle recorder is approximately ±0.25°. Due to angularity of the flow at the pickup vane, the sideslip-angle recorder has a constant error of approximately 1°.

TESTS AND RESULTS

The tests were made while the airplane was flying at an altitude of approximately 11,000 feet and an indicated airspeed of 240 miles per hour. There were no guns mounted in the turrets, and the bomb-bay doors were closed. In this condition a constant-amplitude, pilot-induced oscillation in yaw was performed, the amplitude of which was approximately ±4° and the period approximately 6 seconds. The purpose of this test was to determine the sensitivity of the installation to sideslip at small angles of yaw. This technique was employed because the statoscope was not sufficiently sensitive to measure, by independent readings, the small pressure variations which result from smaller angles of steady sideslip. For a check point, one measurement was made for a steady sideslip in either direction which was great enough to produce a measurable pressure variation. An additional test to determine the nature of the sideslip oscillations which might be encountered on a bombing run was made by recording the sideslip angle during a homing run on a radio range station.

In figure 2 are presented the results of the pilot-induced oscillations. The variation in static pressure is plotted both as a variation in pressure and as a variation in indicated altitude for a standard-atmosphere conversion at the reference altitude. A dashed curve, labeled "Faired indicated pressure altitude," is faired through the values of indicated static pressure which occur at the time of zero sideslip. This curve represents the static-pressure variation which would have occurred had the airplane not been oscillating in sideslip. In an attempt to determine the actual variation in geometric altitude, the normal-acceleration record was integrated twice to obtain the vertical velocity and the vertical displacement from the reference. The result is compared in figure 2 with the indicated pressure altitude.

Figure 3 was obtained from the data in figure 2 by taking the average of the magnitudes of the pressure deviation from the curve labeled "Faired indicated pressure altitude" for different instantaneous values of sideslip in each oscillation. In this way the curve of static-pressure error against sideslip angle can be defined for small values of sideslip with less uncertainty than by taking independent readings of static pressure in steady sideslips. The process of averaging successive cycles also serves to eliminate any unsymmetrical effect present. The test points of figure 3 are replotted in figure 4 for comparison with a calculated result.

The result of the homing run on the radio range station is presented in figure 5 as a flight record of the angle of sideslip corrected for position error. The resulting variation in the indicated static pressure was too small to be measured by the recording instrument which has an uncertainty of ±0.02 inch of water.

DISCUSSION

Indicated variations in pressure altitude in this test are a result of variations in geometric altitude and errors in measured static pressure due to sideslip. The effect of horizontal pressure gradient is neglected because of the short time or distance interval of the test. When the change in geometric altitude is compared with the change in indicated pressure altitude, the amount by which they differ should be a result of local errors in the pressure at the static orifices of the airplane produced by sideslip. However, since the geometric altitude was calculated from the normal acceleration, there are errors in the curve of geometric altitude in figure 2 which result from uncertainties in the data and in the values of vertical velocity and altitude chosen at zero time for the integration calculations. For this reason the geometric altitude cannot be used quantitatively to determine the errors in the pressure altitude. A comparison of the curves of geometric and pressure altitude in figure 2 does show that the gradual variation in the pressure altitude is the result of an actual change in altitude while the small superimposed oscillation is not.

The small superimposed oscillation in pressure altitude appears to be a result of the oscillation in sideslip. The maximum deviation from the faired curve occurs at the time of the maximum value of sideslip. The frequency of the oscillation is twice that of the sideslip because the pressure increases positively for each half-cycle of sideslip. In the normal-acceleration record there is an oscillation of the same frequency as that in sideslip which is probably a result of gyroscopic moments due to the propellers. This fact indicates that there is an oscillation in geometric altitude which would cause an oscillation of

the static pressure. The amplitude of the oscillation in normal acceleration is approximately ±0.03 g units, which, when integrated over 1 period or assumed to be a sinusoidal variation, corresponds, in this test, to a geometric-altitude oscillation of approximately ±1 foot. The total change in static pressure during a half-cycle of sideslip corresponds to a change of -10 feet in pressure altitude at 11,000 feet in the NACA standard atmosphere. At the test frequency of 1/6 cycle per second the pressure-altitude variation corresponds to a vertical-velocity oscillation of ±10 feet per second. Similarly the normal-acceleration oscillation indicates a vertical velocity of only ±1 foot per second, and its period is twice that of the pressure-indicated velocity. In determining the variation of the error in static pressure with sideslip angle shown in figure 3, the geometric contribution was eliminated by averaging successive cycles of the pressure oscillation. This elimination was possible because the geometric effect is alternately positive and negative while the pressure error due to sideslip is always positive.

The variation of pressure with sideslip shown in figure 3 represents the average of the pressures on both sides of the fuselage at the location of the static holes. An explanation for the increase in this pressure with sideslip may be made with the aid of theoretical considerations of the pressure distribution on yawed cylinders. As shown in figure 1, the B-29 fuselage is a circular cylinder. The pressure distribution on such a yawed cylinder may be computed by considering only the effect of the component of flow velocity normal to the cylinder (reference 1). By use of the potential-flow solution for the pressure distribution on a circular cylinder in flow normal to its axis, it can be shown that the average of the pressures existing at any two points, symmetrically located with respect to the vertical axis of the airplane, varies as the square of the angle of sideslip and the square of the angle of attack. The variation is a function of the location of the points of measurement. For a constant angle of attack, the change in average pressure as a function of the square of the angle of sideslip will plot as a straight line, the slope of which is determined by the location of the static orifices. In figure 4 the calculated variation of change in pressure with the square of the angle of sideslip is shown for the orifice location of the Boeing B-29 airplane for comparison with the test data. The good agreement indicates that, for the small angles of sideslip considered, there is little or no separation of the cross flow at the orifice location. For this condition, theoretical considerations indicate that, for an orifice location of 30° from the horizontal axis, there would be zero variation of pressure with sideslip.

Figure 5 is a flight record of sideslip angle observed while homing on a radio range station in relatively smooth air. This record is an indication of the magnitude of sideslip angle which might be experienced by this airplane on a bombing run under these flight conditions. The frequency of the sideslip oscillations which occur is the natural frequency of the airplane in the configuration of the test, which is

approximately the same as that of the forced oscillations previously considered. From this record the angle of sideslip appears never to exceed 2° and the amplitude of oscillation is never more than $\pm 1^{\circ}$. The pressure variations for this amplitude of sideslip were too small to be measured by the recording instrument which has an uncertainty of ±0.02 inch of water.

If the curve of figure 3 is used to determine the static-pressure error for small angles of sideslip, it is possible to estimate the errors likely to be encountered on an actual bombing run at higher altitudes. If it is assumed that the amplitude of sideslip oscillations does not change significantly with altitude, the results of the homing run at 11,000 feet can be used to determine the pressure coefficient $\Delta P/q_c$ from figure 3. At an indicated airspeed of 240 miles per hour and an altitude of 30,000 feet an oscillation in sideslip of $\pm 1^{\circ}$ at the natural period of the test airplane at this airspeed would result in an error of approximately ±1 foot per second in vertical velocity. A steady sideslip of 2° would cause an error of approximately 4 feet in indicated altitude. In general, the error is seen to depend upon the sensitivity of the static source to sideslip, the amplitude and frequency of the oscillations the airplane experiences, and the airspeed and altitude at which it is flying. The sensitivity of the static source to sideslip would depend upon the location of the static orifices and the geometry of the airplane in the vicinity of the static orifices.

CONCLUDING REMARKS

Flight tests were conducted to determine the effect of sideslip on the measurement of free-stream static pressure obtained from orifices located on each side of the fuselage near the nose of an airplane. The measuring instrument was so connected that an average was obtained of the pressures existing at the static orifices on each side of the fuselage. When the airplane is in an attitude of sideslip with this installation, there results an error in the measured static pressure, the magnitude of which increases as the square of the angle of sideslip. From theoretical considerations it appears that the error could be reduced to zero by relocating the static orifices.

The greatest angle of sideslip experienced by the test airplane during a homing run on a radio range station was approximately 2° and the greatest amplitude of oscillation was approximately $\pm 1^{\circ}$. From the test results it was estimated that an oscillation of $\pm 1^{\circ}$ of sideslip, occurring at an altitude of 30,000 feet and while flying at an indicated

airspeed of 240 miles per hour, would result in an error in indicated vertical velocity of ±1 foot per second. An error of 4 feet in indicated altitude would result from a sideslip angle of 2° under the same conditions.

Langley Aeronautical Laboratory
National Advisory Committee for Aeronautics
Langley Field, Va.

REFERENCE

1. Allen, H. Julian.: Pressure Distribution and Some Effects of Viscosity on Slender Inclined Bodies of Revolution. NACA TN 2044, 1950.

[redacted]

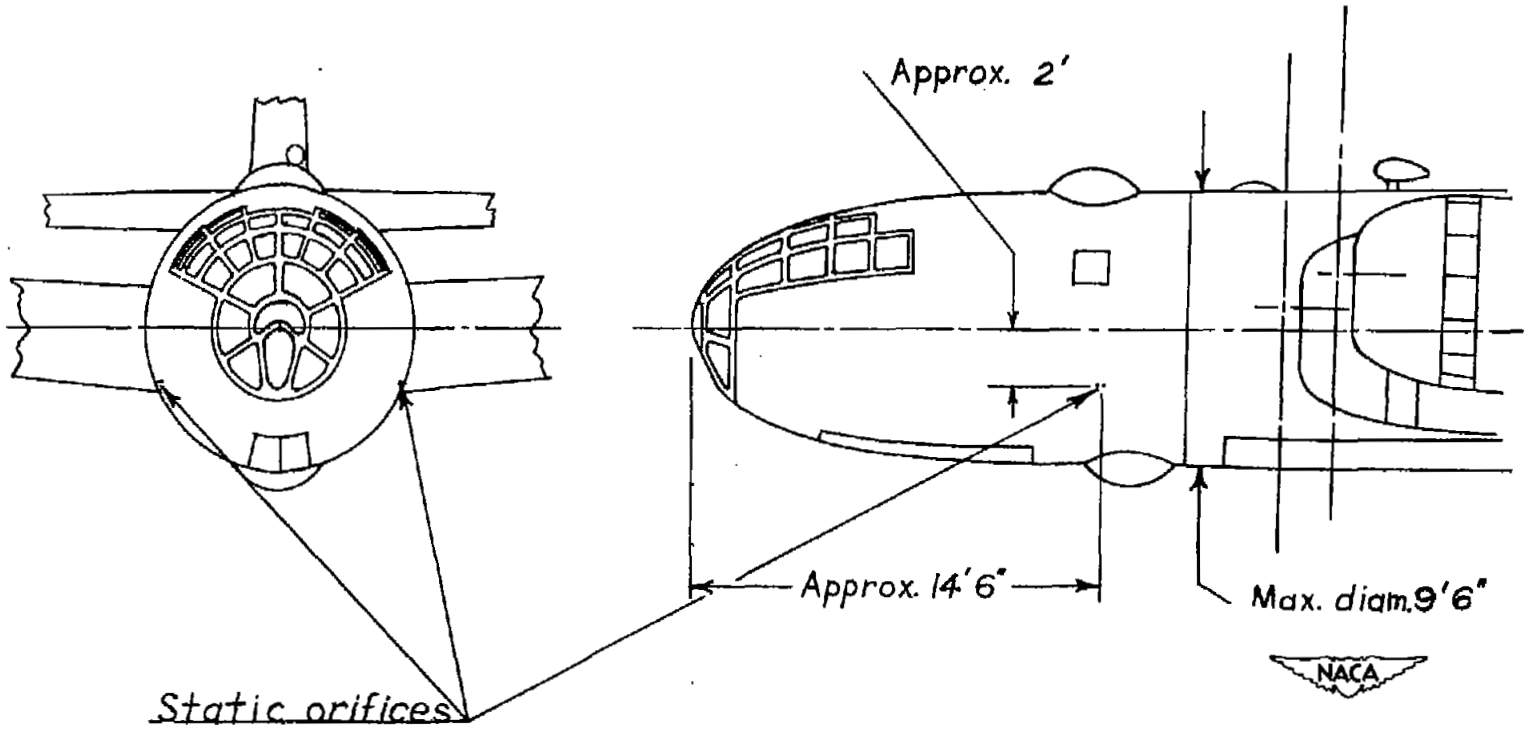

Figure 1.- Location of static source on Boeing B-29 airplane.

[redacted]

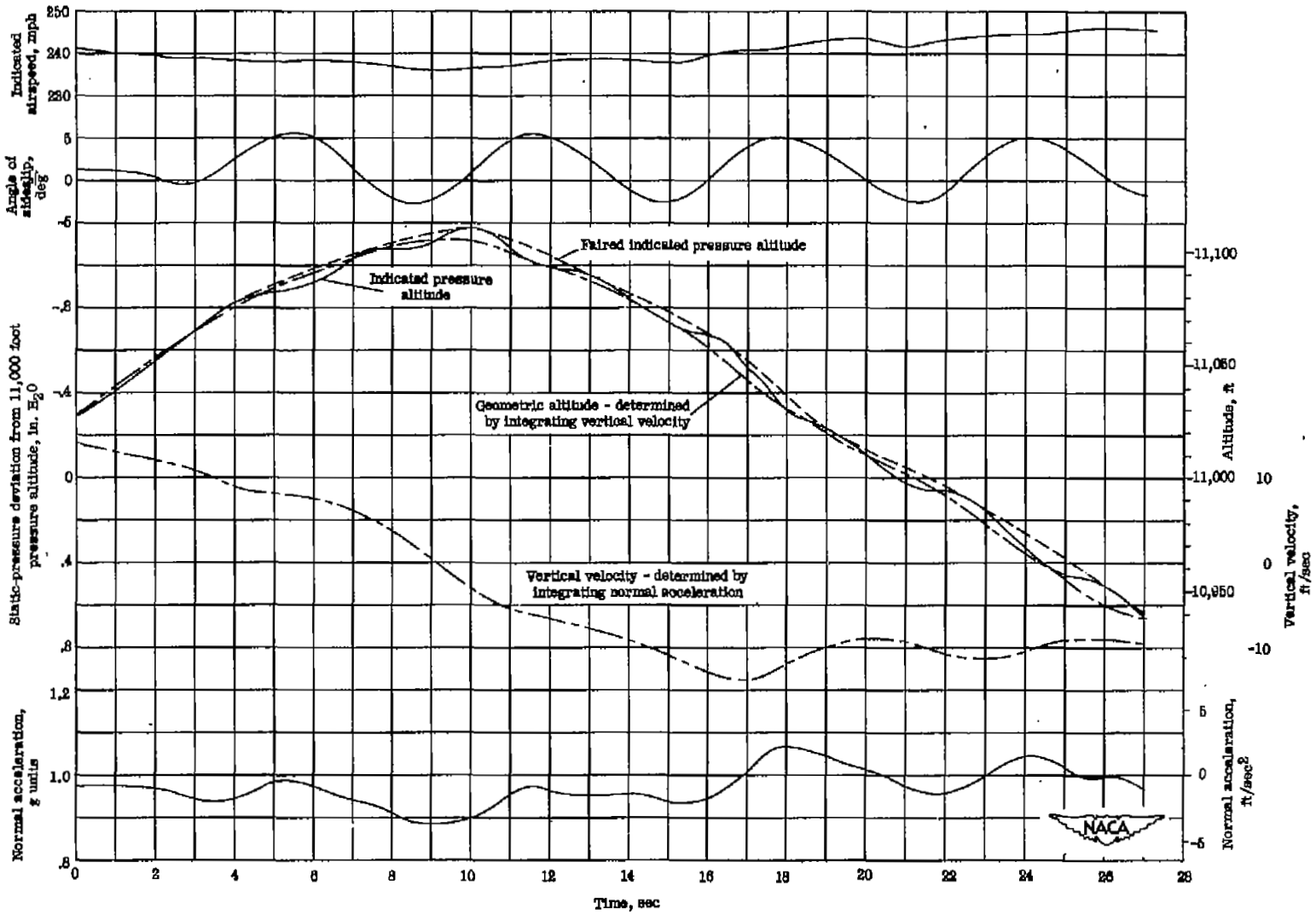

Figure 2.- Time history of a steady yawing oscillation of the Boeing B-29 airplane.

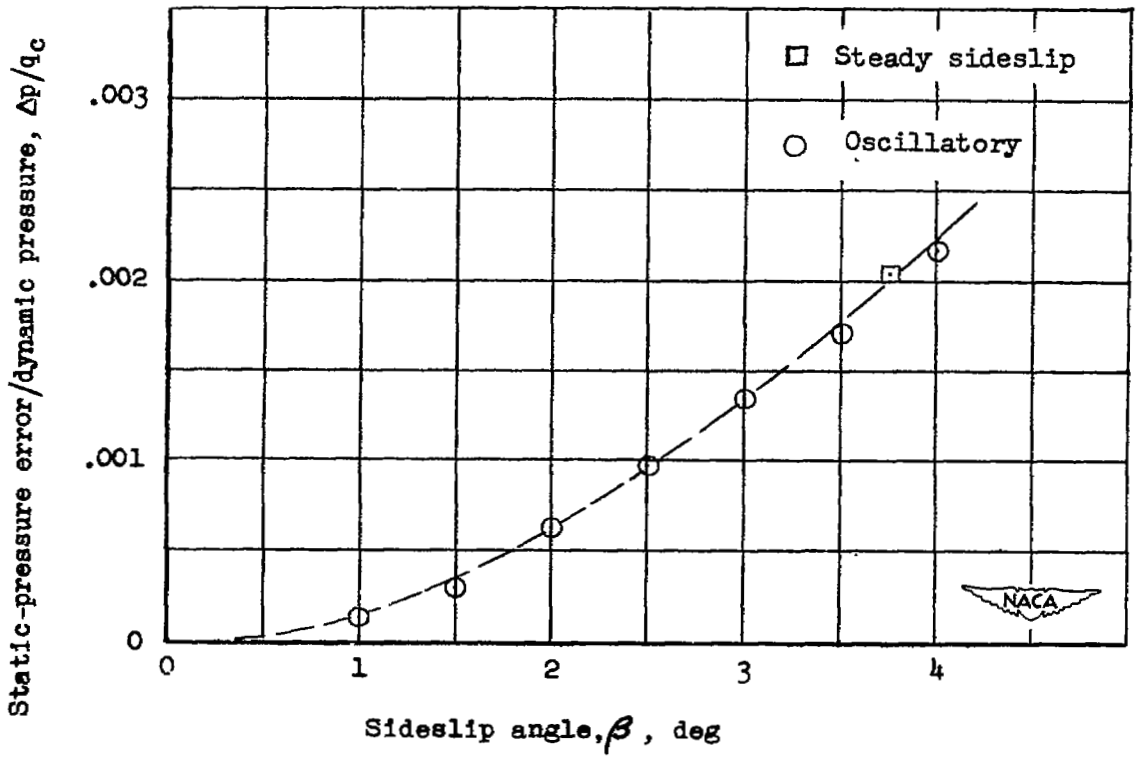

Figure 3.- Static-pressure error due to sideslip.

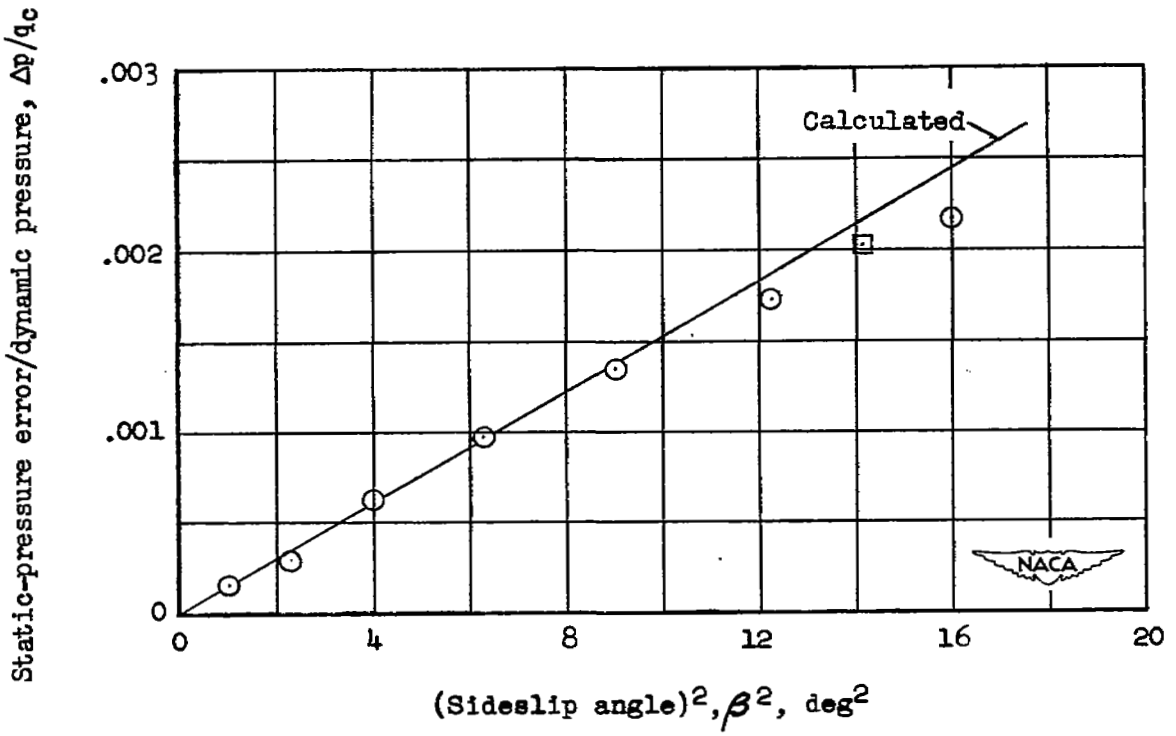

Figure 4.- Static-pressure error due to sideslip compared with calculated results.

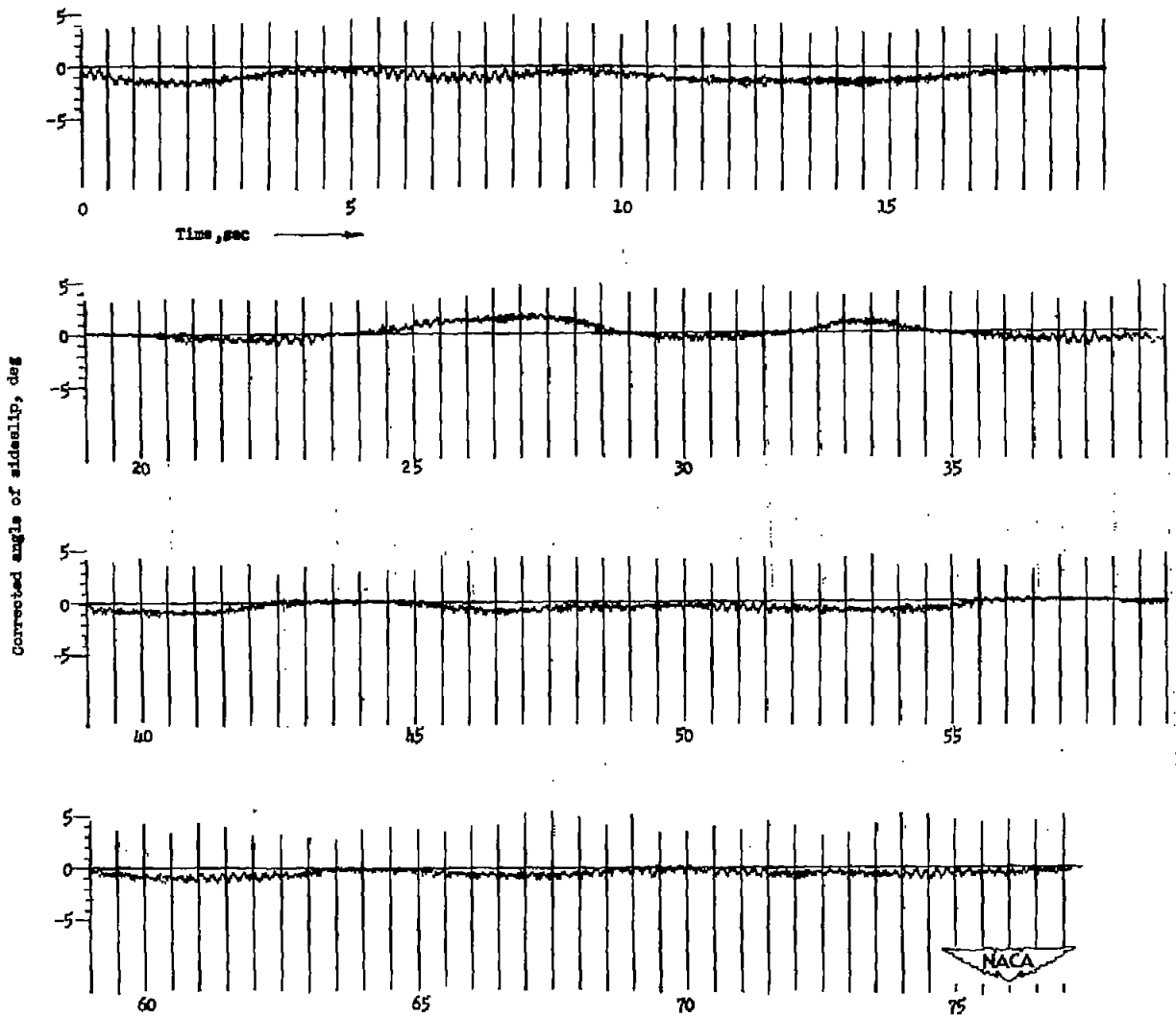

Figure 5.- Flight record of angle of sideslip during a homing run on a radio range station. Indicated airspeed, 240 miles per hour.

NASA Technical Library
3 1176 01436 2512