7-4223 Unclassified ~~CONFIDENTIAL~~

Copy 2
RM L5[illegible]

TECH LIBRARY KAFB, NM
0144800

NOV 13 1957
11757

NACA RM L57H30

7802

NACA

RESEARCH MEMORANDUM

TABULATED PRESSURE DATA FOR A SERIES OF CONTROLS ON A 40° SWEPTBACK WING AT MACH NUMBERS OF 1.61 AND 2.01

By Douglas R. Lord

Langley Aeronautical Laboratory
Langley Field, Va.

Classification cancelled (or changed to Unclassified)
By Authority of NASA Ltr. 2 dated 15 Sep 64 (OFFICER AUTHORIZED TO CHANGE)
By [illegible] (GRADE OF OFFICER MAKING CHANGE)
Feb 64 DATE

CLASSIFIED DOCUMENT

This material contains information affecting the National Defense of the United States within the meaning of the espionage laws, Title 18, U.S.C., Secs. 793 and 794, the transmission or revelation of which in any manner to an unauthorized person is prohibited by law.

NATIONAL ADVISORY COMMITTEE FOR AERONAUTICS

WASHINGTON

November 8, 1957

~~CONFIDENTIAL~~

AFMDC ADJ '57-7861

TECH LIBRARY, KAFB, NM
0144800

NATIONAL ADVISORY COMMITTEE FOR AERONAUTICS

RESEARCH MEMORANDUM

TABULATED PRESSURE DATA FOR A SERIES OF CONTROLS ON A 40° SWEPTBACK WING AT MACH NUMBERS OF 1.61 AND 2.01

By Douglas R. Lord

SUMMARY

An investigation has been made at Mach numbers of 1.61 and 2.01 and Reynolds numbers of 1.7×10^6 and 3.6×10^6 to determine the pressure distributions over a swept wing with a series of 14 control configurations. The wing had 40° of sweep of the quarter-chord line, an aspect ratio of 3.1, and a taper ratio of 0.4. Measurements were made at angles of attack from 0° to ±15° for control deflections from -60° to 60°. This report contains tabulated pressure data for the complete range of test conditions.

INTRODUCTION

As a part of a general program of research on controls, an investigation has been made in the Langley 4- by 4-foot supersonic pressure tunnel to determine the important parameters in the design of controls for use on a 40° sweptback wing at supersonic speeds. Data from previous tests of a similar unswept wing and of a delta wing have been presented in references 1 and 2, respectively. The present tests include six flap-type, one horn-balance, one tip-type, and six spoiler-type controls which were tested on a wing having 40° of sweep of the quarter-chord line, an aspect ratio of 3.1, and a taper ratio of 0.4.

Because of the time involved in the reduction and analysis of the data and the immediate interest in the basic pressure data, the purpose of this report is to present tabulations of the pressures measured on the surfaces of the 14 configurations without any analysis. The wing angle-of-attack range for these tests was from -15° to 15° and the control-deflection range, relative to the wing, was from -60° to 60°.

AFMDC ADJ '57-7861

The tests were conducted at Mach numbers of 1.61 and 2.01 for Reynolds numbers of 1.7×10^6 and 3.6×10^6, based on the mean aerodynamic chord of 11.72 inches.

SYMBOLS

$b/2$	wing semispan
c	wing chord
C_p	pressure coefficient, $\frac{p - p_l}{q}$
M	stream Mach number
p	stream static pressure
p_l	local surface pressure
q	stream dynamic pressure
R	Reynolds number (based on wing mean aerodynamic chord)
x	distance from wing leading edge in chordwise direction
y	distance from wing root in spanwise direction
α	wing angle of attack, deg
δ	control deflection relative to wing (positive when trailing edge is deflected down), deg

APPARATUS

Wind Tunnel

This investigation was conducted in the Langley 4- by 4-foot supersonic pressure tunnel, which is a rectangular, closed-throat, single-return type of wind tunnel with provisions for the control of the pressure, temperature, and humidity of the enclosed air. Flexible nozzle walls were adjusted to give the desired test section Mach numbers of 1.61 and 2.01. During the tests the dew point was kept below -20° F so

that the effects of water condensation in the supersonic nozzle were negligible.

Model and Model Mounting

The model used in this investigation consisted of a swept wing having eight interchangeable controls and various associated control adapters (or replacement sections) required to fit the controls to the basic wing component. The control configurations are presented in figure 1, with moveable controls denoted by shaded areas. The eight basic configurations are identified as configurations 1 to 7 and configuration 9. Another horn-balance configuration, designated configuration 8, failed during testing and, therefore, none of the data from that test is presented herein. Six modifications of the basic configurations were tested. (See fig. 1(c).) Configurations 21, 22, 23, 24, and 25 were obtained by mounting spoilers of the same cross section but of different spans and sweeps at various locations on the upper surface of configuration 2 with the flap fixed in the neutral position. Configuration 46 was obtained by mounting a somewhat smaller spoiler on the lower surface of configuration 4 at the hinge line of the flap. The location of the pressure orifices can be determined from table 1, and the spanwise stations are shown in figure 2.

The basic wing was swept back at 40° along the 25-percent-chord line and had a root chord of 15.88 inches, a tip chord of 6.17 inches, a semispan of 17.02 inches, an aspect ratio of 3.1, and a taper ratio of 0.4. The wing section was 5 percent thick and was made up of a rounded NACA 65-series section extending from the leading edge to the 40-percent-chord line, a flat midsection 0.79 inch thick at the root and 0.31 inch thick at the tip extending to the 75-percent-chord line, and a wedge-shaped trailing edge. Configuration 2 had a blunt trailing edge as shown in figure 1(a). The hinge line on configuration 4 was along the 81.25-percent-chord line, and on configuration 5 it was along the 87.5-percent-chord line. On all other configurations the hinge line was at the 75-percent-chord line.

The basic wing and controls were constructed of steel with the pressure tubes installed in grooves in the surface and faired over with plastic. The spoilers were constructed of 1/16-inch stock steel.

The semispan wing was mounted horizontally in the tunnel from a turntable in a steel boundary-layer bypass plate which was located vertically in the test section about 10 inches from the side wall. Photographs of two of the configurations, mounted for testing, are shown in figure 3.

AFMDC ADJ '57-7861

TESTS

The turntable in the bypass plate, on which the wing was mounted, was rotated to change the model angle of attack. (See fig. 3.) Since the angular deflection of the wing under load was negligible, the angle of attack was measured with a vernier on the outside of the tunnel. Control-surface deflection was changed by means of a gear mechanism which rotates the strain-gage balance, the torque tube, and the control as a unit. The control deflections were set with the aid of a slide-wire control-position indicator mounted on the torque tube near the wing root and were checked under load with a cathetometer mounted outside the tunnel. The pressure distributions were determined from photographs of the multitube manometer boards to which the leads from the model orifices were attached.

Because structural limitations made it impossible to get sufficient pressure tubes through the torque tube to instrument both surfaces of the model, orifices were installed on one surface only. Due to this limitation the models were tested at positive and negative angles of attack over the control-deflection range.

Configurations 1 to 9 and configuration 46 were tested over a control-deflection range from -30° to 30° for angles of attack from -15° to 15°. The remaining configurations, 21 to 25, were tested over an angle-of-attack range from -15° to 15° with 0° control deflection. Additional tests were made on configuration 1 over a control-deflection range from -60° to 60° at angles of attack of 0°, $\pm 6^{\circ}$, and $\pm 12^{\circ}$. The angles mentioned here are in some cases only nominal. The actual values, corrected for deflection under load, are given in tables 2 to 24.

Most of the tests were made at a tunnel stagnation pressure of 13 lb/sq in. abs at $M = 1.61$ and 15 lb/sq in. abs at $M = 2.01$, corresponding to a Reynolds number of 3.6×10^{6} based on the mean aerodynamic chord of 11.72 inches. Additional tests were made on configurations 1 and 2 at $R = 1.7 \times 10^{6}$ at $M = 1.61$. In order to insure a turbulent boundary layer over the model, 1/4-inch-wide strips of No. 60 carborundum grains were attached to both the upper and lower surfaces a short distance back from the leading edge. These strips completely spanned the model except within 1/4 inch of the orifice stations.

PRECISION OF DATA

The mean Mach numbers in the region occupied by the model are estimated from calibrations to be 1.61 and 2.01 with local variations being

smaller than ±0.02. There is no evidence of any significant flow angularities. The estimated accuracies in setting the wing angle of attack and control deflection are ±0.05° and ±0.1°, respectively. The measured pressure coefficients are believed to be accurate within ±0.01. In order to facilitate the publication of the data, a complete final check has not been made and random errors may be present where damage to a model or malfunctioning of an orifice may have occurred during the tests. Such errors can usually be detected by a visual inspection of the plotted pressure distributions.

PRESENTATION OF DATA

The measured pressure data are presented in tables 2 to 24 as values of pressure coefficient C_p on the surface of the models. The spanwise and chordwise orifice locations are listed in table 1 and the approximate spanwise stations are shown in figure 2. When orifices were known to give erroneous results, the points were not tabulated. Where two orifices are shown to be located at $x/c = 0.725$ for a given station, the first orifice is located on the wing and the second orifice is located on the control.

Langley Aeronautical Laboratory,
National Advisory Committee for Aeronautics,
Langley Field, Va., August 15, 1957.

REFERENCES

1. Lord, Douglas R., and Czarnecki, K. R.: Tabulated Pressure Data for Several Flap-Type Trailing-Edge Controls on a Trapezoidal Wing at Mach Numbers of 1.61 and 2.01. NACA RM L55J04, 1956.

2. Lord, Douglas R., and Czarnecki, K. R.: Tabulated Pressure Data for a Series of Controls on a 60° Delta Wing at Mach Numbers of 1.61 and 2.01. NACA RM L55L05, 1956.

TABLE 1.- ORIFICE LOCATIONS

(a) Spanwise location of orifice stations

Station	2y/b for configuration:							
	1	2	3	4	5	6	7	9
1	0.015	0.015	0.015	0.015	0.015	0.015	0.014	0.014
2	.168	.168	.168	.168	.168	.168	.157	.157
3	.338	.338	.338	.338	.338	.338	.317	.317
4	.506	.506	.503	.503	.503	.503	.472	.472
24			.509	.509	.509	.509		
5	.670	.670	.670	.670	.670	.670	.629	.629
6	.834	.834	.834	.834	.834	.834	.782	.782
7	.997	.997	.997	.997	.997	.997	.936	.936
8							.943	.943
9							.970	.970
10							.998	.998

TABLE 1.- ORIFICE LOCATIONS - Continued

(b) Chordwise location of orifices on configurations 1 and 2

Orifice	Values of x/c at station:										
	1	2	3	4	24	5	6	7	8	9	10
1	0	0	0	0		0	0	0			
2	.050	.050	.050	.050		.050	.050	.050			
3	.100	.100	.100	.100		.100	.100	.100			
4	.150	.150	.150	.150		.150	.150	.150			
5	.200	.200	.200	.200		.200	.200	.200			
6	.250	.250	.250	.250		.250	.250	.250			
7	.300	.300	.300	.300		.300	.300	.300			
8	.350	.350	.350	.350		.350	.350	.350			
9	.400	.400	.400	.400		.400	.400	.400			
10	.450	.450		.450		.450	.450	.450			
11	.500	.500		.500		.500					
12	.550	.550		.550		.550	.550	.550			
13	.600	.600	.600	.600		.600	.600	.600			
14	.650	.650	.650	.650		.650	.650	.650			
15	.700	.700	.700	.700		.700	.700	.700			
16	.725	.725	.725	.725		.725	.725	.725			
17		.725	.725	.725		.725	.725	.725			
18		.750	.750	.750		.750	.750	.750			
19	.80	.80	.80	.80		.80	.80	.80			
20	.85	.85	.85	.85		.85	.85	.85			
21	.90	.90	.90	.90		.90	.90	.90			
22	.98	.98	.98	.98		.98	.98	.98			

TABLE 1.- ORIFICE LOCATIONS - Continued

(c) Chordwise location of orifices on configuration 3

Orifice	Values of x/c at station:										
	1	2	3	4	24	5	6	7	8	9	10
1	0	0	0	0		0	0	0			
2	.050	.050	.050	.050		.050	.050	.050			
3	.100	.100	.100	.100		.100	.100	.100			
4	.150	.150	.150	.150		.150	.150	.150			
5	.200	.200	.200	.200		.200	.200	.200			
6	.250	.250	.250	.250		.250	.250	.250			
7	.300	.300	.300	.300		.300	.300	.300			
8	.350	.350	.350	.350		.350	.350	.350			
9	.400	.400	.400	.400		.400	.400	.400			
10	.450	.450		.450		.450	.450	.450			
11	.500	.500		.500		.500					
12	.550	.550		.550		.550	.550	.550			
13	.600	.600	.600	.600		.600	.600	.600			
14	.650	.650	.650	.650		.650	.650	.650			
15	.700	.700	.700	.700		.700	.700	.700			
16	.725	.725	.725	.725		.725	.725	.725			
17		.725	.725	.725							
18		.750	.750	.750		.750	.750	.750			
19	.800	.800	.800	.800		.800	.800	.800			
20	.850	.850	.850	.850		.850	.850	.850			
21	.900	.900	.900	.900		.900	.900	.900			
22	.980	.980	.980	.980		.980	.980	.980			

TABLE 1.- ORIFICE LOCATIONS - Continued

(d) Chordwise location of orifices on configurations 4 and 5

Orifice	Values of x/c at station:										
	1	2	3	4	24	5	6	7	8	9	10
1	0	0	0	0		0	0	0			
2	.050	.050	.050	.050		.050	.050	.050			
3	.100	.100	.100	.100		.100	.100	.100			
4	.150	.150	.150	.150		.150	.150	.150			
5	.200	.200	.200	.200		.200	.200	.200			
6	.250	.250	.250	.250		.250	.250	.250			
7	.300	.300	.300	.300		.300	.300	.300			
8	.350	.350	.350	.350		.350	.350	.350			
9	.400	.400	.400	.400		.400	.400	.400			
10	.450	.450		.450		.450	.450	.450			
11	.500	.500		.500		.500					
12	.550	.550		.550		.550	.550	.550			
13	.600	.600	.600	.600		.600	.600	.600			
14	.650	.650	.650	.650		.650	.650	.650			
15	.700	.700	.700	.700		.700	.700	.700			
16	.725	.725	.725	.725		.725	.725	.725			
17	.725	.725	.725	.725							
18	.750	.750	.750	.750		.750	.750	.750			
19	.800	.800	.800	.800		.800	.800	.800			
20	.850	.850	.850	.850		.850	.850	.850			
21	.900	.900	.900	.900		.900	.900	.900			
22	.980	.980	.980	.980		.980	.980	.980			

TABLE 1.- ORIFICE LOCATIONS - Continued

(e) Chordwise location of orifices on configuration 6

Orifice	Values of x/c at station:										
	1	2	3	4	24	5	6	7 .	8	9	10
1	0	0	0	0		0	0	0			
2	.050	.050	.050	.050		.050	.050	.050			
3	.100	.100	.100	.100		.100	.100	.100			
4	.150	.150	.150	.150		.150	.150	.150			
5	.200	.200	.200	.200		.200	.200	.200			
6	.250	.250	.250	.250		.250	.250	.250			
7	.300	.300	.300	.300		.300	.300	.300			
8	.350	.350	.350	.350		.350	.350	.350			
9	.400	.400	.400	.400		.400	.400	.400			
10	.450	.450		.450		.450	.450	.450			
11	.500	.500		.500		.500					
12	.550	.550		.550		.550	.550	.550			
13	.600	.600	.600	.600		.600	.600	.600			
14	.650	.650	.650	.650		.650	.650	.650			
15	.700	.700	.700	.700		.700	.700	.700			
16	.725	.725	.725	.725		.725	.725	.725			
17						.725	.725	.725			
18	.750	.750	.750	.750		.750	.750	.750			
19	.800	.800	.800	.800		.800	.800	.800			
20	.850	.850	.850	.850		.850	.850	.850			
21	.900	.900	.900	.900		.900	.900	.900			
22	.980	.980	.980	.980		.980	.980	.980			

TABLE 1.- ORIFICE LOCATIONS - Continued

(f) Chordwise location of orifices on configuration 7

Orifice	Values of x/c at station:										
	1	2	3	4	24	5	6	7	8	9	10
1	0	0	0	0		0	0	0	0	0.110	0
2	.050	.050	.050	.050		.050	.050	.050	.100	.230	.130
3	.100	.100	.100	.100		.100	.100	.100	.200	.450	.260
4	.150	.150	.150	.150		.150	.150	.150	.400	.680	.520
5	.200	.200	.200	.200		.200	.200	.200	.610	.910	.790
6	.250	.250	.250	.250		.250	.250	.250	.810		.990
7	.300	.300	.300	.300		.300	.300	.300	.960		
8	.350	.350	.350	.350		.350	.350	.350			
9	.400	.400	.400	.400		.400	.400	.400			
10	.450	.450		.450		.450	.450	.450			
11	.500	.500		.500		.500					
12	.550	.550		.550		.550	.550	.550			
13	.600	.600	.600	.600		.600	.600	.600			
14	.650	.650	.650	.650		.650	.650	.650			
15	.700	.700	.700	.700		.700	.700	.700			
16	.725	.725	.725	.725		.725	.725	.725			
17						.725	.725	.725			
18	.750	.750	.750	.750		.750	.750	.750			
19	.800	.800	.800	.800		.800	.800	.800			
20	.850	.850	.850	.850		.850	.850	.850			
21	.900	.900	.900	.900		.900	.900	.900			
22	.980	.980	.980	.980		.980	.980	.980			

TABLE 1.- ORIFICE LOCATIONS - Concluded

(g) Chordwise location of orifices on configuration 9

Orifice	Values of x/c at station:										
	1	2	3	4	24	5	6	7	8	9	10
1	0	0	0	0		0	0	0	0	0.100	0
2	.050	.050	.050	.050		.050	.050	.050	.100	.200	.100
3	.100	.100	.100	.100		.100	.100	.100	.200	.400	.200
4	.150	.150	.150	.150		.150	.150	.150	.400	.600	.400
5	.200	.200	.200	.200		.200	.200	.200	.600	.800	.600
6	.250	.250	.250	.250		.250	.250	.250	.800	.950	.800
7	.300	.300	.300	.300		.300	.300	.300	.950		.950
8	.350	.350	.350	.350		.350	.350	.350			
9	.400	.400	.400	.400		.400	.400	.400			
10	.450	.450		.450		.450	.450	.450			
11	.500	.500		.500		.500					
12	.550	.550		.550		.550	.550	.550			
13	.600	.600	.600	.600		.600	.600	.600			
14	.650	.650	.650	.650		.650	.650	.650			
15	.700	.700	.700	.700		.700	.700	.700			
16	.725	.725	.725	.725		.725	.725	.725			
17											
18	.750	.750	.750	.750		.750	.750	.750			
19	.800	.800	.800	.800		.800	.800	.800			
20	.850	.850	.850	.850		.850	.850	.850			
21	.900	.900	.900	.900		.900	.900	.900			
22	.980	.980	.980	.980		.980	.980	.980			

Table 2

Pressure coefficients on swept wing

Configuration 1 M=2.01 R=3.6 x 10^6

Orif	Station 1	2	3	4	24	5	6	7	8	9	10	Orif
					α=-15		δ= 0.0					
1	.610	.725	.691	.599		.166	.597	.190				1
2	.420	.566	.605	.633		.650	.678	.546				2
3	.406	.456	.520	.504		.548	.583	.416				3
4	.386	.407	.456	.496		.524	.524	.303				4
5	.363	.378	.414	.448		.486	.499	.233				5
6	.324	.351	.389	.423		.449	.463	.202				6
7	.329	.339	.369	.394		.414	.414	.166				7
8	.314	.315	.324	.353		.374	.403	.147				8
9	.325	.292	.308	.331		.362	.391	.129				9
10	.304	.292		.332		.358	.380	.112				10
11	.306	.302		.325		.358						11
12	.313	.300		.330		.359	.376	.057				12
13	.289	.300	.313	.327		.352	.370	.075				13
14	.298	.296	.303	.314		.345	.357	.051				14
15	.280	.254	.267	.283		.286	.297	-.080				15
16	.479	.055	.117	.043		.135	-.059	-.034				16
17		-.006	-.063	-.089		-.090	-.063	-.260				17
18		.195	.198	.179		.164	.230	.034				18
19	.128	.148	.149	.155		.181	.184	-.004				19
20			.142	.151		.164	.181	-.017				20
21	.119	.131	.131	.146		.164	.178	-.008				21
22	.156	.147	.148	.159		.171	.166	.008				22
					α=-12		δ=-30.0					
1	.698	.732	.726	.671		.342	.701	.428				1
2	.357	.491	.528	.558		.559	.593	.473				2
3	.337	.370	.423	.403		.460	.473	.312				3
4	.307	.324	.368	.403		.432	.432	.233				4
5	.284	.303	.327	.359		.397	.409	.171				5
6	.257	.279	.307	.336		.367	.380	.141				6
7	.261	.268	.288	.311		.336	.336	.108				7
8	.245	.245	.253	.280		.295	.321	.110				8
9	.254	.223	.234	.255		.280	.306	.215				9
10	.235	.226		.251		.273	.371	.289				10
11	.237	.232		.248		.270						11
12	.243	.230		.249		.461	.664	.288				12
13	.224	.230	.235	.268		.615	.686	.302				13
14	.230	.230	.239	.571		.650	.693	.267				14
15	.225	.201	.523	.619		.668	.692	.144				15
16	.375	.390	.549	.619		.649	.698	-.258				16
17		-.123	-.203	-.204		-.197	.043	.206				17
18		.405	.541	.624		.670	.688	.337				18
19	.572	.935	.745	.675		.683	.700	.412				19
20			1.032	.883		.793	.762	.428				20
21	.626	.846	.999	1.037		.926	.818	.334				21
22	.647	.759	.814	.846		.803	.677	.335				22
					α=-12		δ=-20.0					
1	.695	.731	.724	.672		.336	.700	.418				1
2	.358	.490	.528	.563		.560	.597	.474				2
3	.336	.372	.425	.408		.461	.477	.317				3
4	.308	.325	.368	.407		.435	.437	.238				4
5	.283	.302	.331	.361		.399	.414	.175				5
6	.257	.279	.309	.340		.370	.384	.145				6
7	.260	.267	.291	.313		.338	.341	.112				7
8	.246	.244	.255	.283		.300	.323	.095				8
9	.254	.221	.236	.257		.284	.310	.076				9
10	.234	.225		.255		.277	.295	.055				10
11	.236	.234		.251		.273						11
12	.243	.229		.253		.273	.288	.010				12
13	.223	.230	.237	.249		.267	.281	.036				13
14	.231	.231	.232	.239		.263	.273	.120				14
15	.219	.191	.203	.221		.252	.412	.017				15
16	.373	.161	.242	.328		.362	.449	.143				16
17		.041	-.025	-.069		.003	.259	-.250				17
18		.258	.251	.311		.367	.512	.190				18
19	.352	.633	.634	.598		.618	.742	.342				19
20			.679	.720		.758	.809	.417				20
21	.421	.541	.647	.716		.771	.780	.379				21
22	.440	.510	.589	.624		.629	.597	.284				22

Table 2 Continued

Pressure coefficients on swept wing

Configuration 1 M=2.01 R=3.6 x 10^6

Orif	Station 1	2	3	4	24	5	6	7	8	9	10	Orif
					α=-12		δ= -10.0					
1	.694	.732	.725	.670		.333	.699	.404				1
2	.359	.491	.529	.563		.565	.603	.480				2
3	.337	.372	.426	.408		.465	.483	.323				3
4	.311	.324	.371	.408		.438	.444	.242				4
5	.288	.301	.330	.366		.403	.420	.178				5
6	.261	.280	.309	.340		.371	.392	.149				6
7	.262	.268	.290	.317		.340	.345	.116				7
8	.248	.247	.257	.286		.302	.332	.100				8
9	.255	.224	.236	.260		.287	.316	.082				9
10	.236	.226		.257		.281	.301	.062				10
11	.237	.233		.253		.278						11
12	.244	.230		.256		.278	.295	.014				12
13	.222	.232	.237	.252		.271	.288	.027				13
14	.230	.231	.230	.240		.268	.278	.004				14
15	.216	.193	.202	.217		.221	.234	-.125				15
16	.374	.026	.072	.024		.090	-.035	-.039				16
17		-.001	-.015	-.023		-.025	-.031	-.249				17
18		.300	.170	.144		.096	.348	.090				18
19	.184	.331	.342	.340		.369	.386	.059				19
20			.329	.346		.355	.380	.083				20
21	.253	.270	.318	.339		.364	.372	.067				21
22	.214	.270	.312	.346		.348	.328	.057				22
					α=-12		δ= - 5.0					
1	.696	.733	.725	.672		.330	.696	.401				1
2	.362	.494	.530	.565		.567	.604	.483				2
3	.339	.374	.428	.411		.467	.485	.325				3
4	.311	.328	.372	.411		.440	.445	.242				4
5	.288	.305	.335	.366		.405	.421	.179				5
6	.262	.280	.314	.343		.374	.392	.152				6
7	.264	.269	.295	.317		.342	.347	.116				7
8	.249	.248	.258	.287		.304	.332	.100				8
9	.255	.226	.239	.262		.289	.316	.083				9
10	.237	.228		.257		.283	.301	.061				10
11	.239	.235		.254		.280						11
12	.245	.231		.256		.278	.294	.013				12
13	.224	.231	.242	.253		.272	.288	.038				13
14	.230	.232	.233	.243		.268	.281	.011				14
15	.217	.195	.204	.218		.221	.234	-.116				15
16	.371	.016	.072	.010		.086	-.080	-.056				16
17		-.026	-.060	-.077		-.075	-.068	-.234				17
18		.236	.212	.181		.150	.268	.021				18
19	.123	.193	.197	.192		.222	.218	-.028				19
20			.182	.191		.195	.213	-.035				20
21	.162	.153	.174	.178		.197	.206	-.040				21
22	.137	.161	.183	.199		.203	.187	-.036				22
					α=-12		δ= 0.0					
1	.716	.724	.714	.686		.371	.711	.448				1
2	.345	.470	.510	.549		.548	.585	.464				2
3	.312	.348	.401	.390		.447	.462	.298				3
4	.290	.307	.352	.391		.422	.424	.222				4
5	.267	.283	.315	.346		.383	.400	.162				5
6	.240	.259	.292	.324		.357	.373	.134				6
7	.244	.249	.274	.301		.326	.331	.100				7
8	.232	.230	.239	.269		.287	.312	.082				8
9	.233	.205	.221	.244		.272	.296	.063				9
10	.225	.210		.241		.262	.283	.043				10
11	.221	.218		.238		.260						11
12	.222	.215		.240		.258	.277	.002				12
13	.209	.216	.224	.235		.253	.273	.024				13
14	.214	.214	.219	.224		.252	.262	-.008				14
15	.200	.179	.188	.202		.207	.219	-.116				15
16	.313	.008	.060	-.003		.072	-.081	-.058				16
17		-.035	-.068	-.085		-.080	-.072	-.198				17
18		.121	.139	.131		.129	.152	-.036				18
19	.070	.074	.075	.075		.100	.097	-.086				19
20			.068	.073		.080	.093	-.096				20
21	.059	.057	.057	.064		.078	.088	-.104				21
22	.083	.068	.068	.081		.087	.077	-.086				22

Table 2 Continued

Pressure coefficients on swept wing

Configuration 1 M=2.01 R=3.6 x 10^6

Orif	Station 1	2	3	4	24	5	6	7	8	9	10	Orif
					α=-12		δ= 5.0					
1	.713	.726	.711	.682		.362	.708	.437				1
2	.345	.472	.515	.550		.550	.587	.470				2
3	.314	.350	.405	.393		.450	.465	.310				3
4	.291	.309	.354	.392		.424	.428	.231				4
5	.268	.285	.315	.349		.388	.404	.171				5
6	.240	.263	.293	.328		.359	.376	.141				6
7	.245	.253	.276	.303		.329	.333	.108				7
8	.233	.232	.242	.272		.289	.318	.092				8
9	.232	.208	.223	.246		.278	.303	.075				9
10	.225	.211		.245		.268	.287	.058				10
11	.221	.220		.241		.266						11
12	.222	.217		.242		.264	.284	.008				12
13	.208	.218	.226	.238		.259	.278	.025				13
14	.215	.215	.220	.228		.257	.267	.003				14
15	.202	.178	.190	.206		.211	.225	-.123				15
16	.312	.008	.062	.000		.079	-.093	-.060				16
17		-.026	-.065	-.087		-.083	-.075	-.218				17
18		.055	.060	.078		.081	.088	-.060				18
19	.027	.001	.008	.017		.030	.039	-.114				19
20			.003	.013		.022	.036	-.109				20
21	-.010	-.003	-.009	.006		.016	.034	-.115				21
22	-.026	.014	.004	.015		.027	.027	-.097				22
					α=-12		δ= 10.0					
1	.716	.729	.710	.687		.365	.711	.434				1
2	.348	.474	.514	.555		.555	.590	.472				2
3	.315	.353	.404	.395		.457	.468	.312				3
4	.294	.311	.354	.397		.430	.430	.233				4
5	.270	.288	.320	.353		.393	.405	.171				5
6	.243	.265	.297	.331		.364	.379	.143				6
7	.246	.255	.282	.307		.334	.336	.110				7
8	.233	.235	.246	.276		.292	.319	.094				8
9	.234	.209	.228	.251		.277	.306	.074				9
10	.230	.211		.249		.269	.292	.053				10
11	.224	.222		.245		.267						11
12	.223	.220		.246		.265	.286	.008				12
13	.210	.221	.231	.243		.259	.281	.026				13
14	.216	.217	.226	.233		.259	.271	-.001				14
15	.203	.181	.194	.210		.213	.227	-.122				15
16	.310	.012	.064	.004		.079	-.091	-.064				16
17		-.016	-.048	-.073		-.080	-.067	-.222				17
18		-.015	-.014	.006		.008	.012	-.101				18
19	-.036	-.070	-.059	-.047		-.043	-.032	-.144				19
20			-.063	-.053		-.049	-.037	-.158				20
21	-.068	-.068	-.071	-.058		-.052	-.038	-.159				21
22	-.066	-.049	-.064	-.051		-.043	-.041	-.142				22
					α=-12		δ= 20.0					
1	.717	.732	.725	.682		.361	.709	.424				1
2	.350	.477	.515	.553		.555	.594	.476				2
3	.318	.354	.407	.395		.457	.474	.316				3
4	.295	.312	.355	.394		.431	.436	.237				4
5	.273	.290	.319	.352		.395	.413	.176				5
6	.246	.270	.298	.332		.366	.384	.147				6
7	.250	.257	.281	.306		.336	.340	.113				7
8	.236	.236	.245	.277		.295	.323	.096				8
9	.238	.213	.226	.252		.282	.312	.078				9
10	.235	.215		.248		.274	.296	.059				10
11	.228	.226		.245		.271						11
12	.227	.223		.247		.269	.291	.012				12
13	.215	.223	.231	.242		.264	.284	.031				13
14	.221	.224	.223	.233		.264	.276	.006				14
15	.207	.185	.195	.210		.218	.232	-.124				15
16	.303	.019	.066	.003		.084	-.096	-.058				16
17		.002	-.056	-.104		-.121	-.077	-.189				17
18		-.127	-.126	-.116		-.110	-.116	-.179				18
19	-.109	-.175	-.172	-.158		-.157	-.147	-.213				19
20			-.173	-.166		-.161	-.152	-.226				20
21	-.151	-.175	-.179	-.167		-.160	-.154	-.217				21
22	-.135	-.134	-.170	-.164		-.154	-.150	-.205				22

Table 2 Continued

Pressure coefficients on swept wing

Configuration 1 M= 2.01 R= 3.6 x 10^6

Orif	Station 1	2	3	4	24	5	6	7	8	9	10	Orif
					α= -12		δ= 30.0					
1	.714	.727	.725	.686		.356	.711	.420				1
2	.346	.471	.514	.555		.558	.598	.481				2
3	.312	.347	.407	.398		.459	.476	.322				3
4	.291	.307	.356	.398		.432	.438	.242				4
5	.267	.285	.320	.356		.395	.417	.180				5
6	.241	.262	.299	.335		.369	.388	.150				6
7	.245	.249	.284	.308		.338	.344	.118				7
8	.230	.232	.248	.280		.299	.330	.101				8
9	.231	.206	.228	.253		.284	.316	.081				9
10	.233	.210		.250		.277	.301	.064				10
11	.220	.221		.247		.275						11
12	.219	.217		.248		.274	.296	.017				12
13	.210	.218	.232	.245		.268	.290	.039				13
14	.215	.216	.227	.235		.266	.282	.012				14
15	.203	.181	.196	.214		.221	.237	-.116				15
16	.287	.020	.067	.005		.086	-.039	-.043				16
17		-.002	-.134	-.119		-.085	-.115	-.165				17
18		-.189	-.186	-.176		-.176	-.176	-.208				18
19	-.156	-.225	-.218	-.207		-.206	-.196	-.230				19
20			-.221	-.213		-.206	-.198	-.239				20
21	-.182	-.222	-.227	-.213		-.207	-.199	-.225				21
22	-.199	-.158	-.205	-.207		-.195	-.187	-.213				22
					α= - 9		δ= 0.0					
1	.787	.723	.742	.740		.550	.753	.682				1
2	.257	.368	.438	.468		.452	.493	.386				2
3	.251	.253	.293	.302		.364	.349	.188				3
4	.214	.233	.273	.303		.335	.334	.151				4
5	.203	.205	.234	.267		.302	.313	.107				5
6	.176	.191	.213	.246		.274	.290	.082				6
7	.176	.181	.201	.223		.250	.257	.057				7
8	.163	.165	.169	.196		.215	.239	.039				8
9	.162	.143	.155	.176		.199	.223	.021				9
10	.156	.145		.171		.193	.208	.002				10
11	.154	.151		.166		.189						11
12	.149	.149		.168		.189	.204	-.031				12
13	.153	.151	.153	.163		.181	.202	-.006				13
14	.153	.150	.149	.153		.181	.192	-.028				14
15	.139	.121	.127	.136		.143	.160	-.115				15
16	.226	-.024	.016	-.035		.029	-.067	-.046				16
17		-.044	-.065	-.074		-.066	-.065	-.156				17
18		.068	.082	.074		.073	.096	-.048				18
19	.023	.021	.026	.026		.043	.044	-.092				19
20			.019	.022		.027	.041	-.105				20
21	.017	.010	.009	.017		.023	.038	-.104				21
22	.036	.019	.019	.029		.033	.029	-.089				22
					α= - 6		δ= -30.0					
1	.820	.719	.748	.764		.681	.779	.870				1
2	.202	.270	.340	.377		.372	.393	.299				2
3	.181	.182	.227	.237		.261	.245	.068				3
4	.148	.154	.190	.203		.226	.223	.071				4
5	.138	.130	.151	.179		.207	.211	.035				5
6	.115	.123	.139	.160		.187	.195	.034				6
7	.114	.116	.124	.144		.166	.167	.023				7
8	.105	.101	.099	.121		.133	.150	.008				8
9	.101	.080	.086	.100		.120	.140	-.002				9
10	.095	.083		.098		.115	.126	-.015				10
11	.094	.092		.093		.110						11
12	.094	.089		.096		.110	.291	.140				12
13	.092	.091	.086	.095		.202	.401	.136				13
14	.093	.091	.082	.210		.383	.426	.143				14
15	.082	.067	.272	.363		.415	.438	.057				15
16	.170	.212	.328	.383		.398	.446	.145				16
17		.026	.014	.014		.026	.114	-.081				17
18		.222	.319	.370		.420	.440	.134				18
19	.403	.690	.548	.480		.469	.485	.262				19
20			.766	.664		.596	.564	.340				20
21	.433	.639	.787	.795		.714	.625	.373				21
22	.433	.591	.687	.717		.646	.540	.310				22

Table 2 Continued

Pressure coefficients on swept wing

Configuration 1 M=2.01 R=3.6 x 10^6

Orif	Station 1	2	3	4	24	5	6	7	8	9	10	Orif
					α=- 6		δ= -20.0					
1	.820	.719	.750	.765		.681	.782	.872				1
2	.203	.268	.341	.380		.377	.399	.305				2
3	.179	.182	.226	.239		.266	.251	.073				3
4	.150	.154	.191	.204		.233	.230	.079				4
5	.139	.129	.154	.182		.213	.218	.041				5
6	.115	.123	.140	.164		.191	.203	.039				6
7	.114	.116	.125	.149		.170	.173	.024				7
8	.104	.102	.101	.123		.137	.158	.010				8
9	.102	.081	.089	.103		.125	.147	.000				9
10	.097	.083		.100		.117	.131	-.017				10
11	.095	.092		.095		.113						11
12	.092	.088		.100		.114	.126	-.033				12
13	.094	.090	.089	.096		.108	.122	-.027				13
14	.095	.091	.085	.089		.108	.116	-.048				14
15	.081	.063	.065	.071		.078	.098	-.073				15
16	.162	.046	.069	.098		.100	.129	.061				16
17		.033	.060	.068		.088	.105	-.073				17
18		.143	.089	.097		.116	.199	.202				18
19	.196	.423	.424	.401		.388	.466	.211				19
20			.454	.467		.465	.508	.234				20
21	.251	.359	.443	.472		.494	.501	.217				21
22	.247	.338	.415	.449		.449	.412	.177				22
					α=- 6		δ=-10.0					
1	.823	.721	.750	.764		.680	.780	.862				1
2	.204	.270	.341	.382		.378	.400	.304				2
3	.181	.185	.226	.241		.266	.253	.073				3
4	.151	.157	.190	.207		.232	.231	.080				4
5	.140	.131	.155	.183		.212	.221	.039				5
6	.118	.125	.143	.166		.191	.203	.037				6
7	.116	.119	.128	.149		.170	.175	.022				7
8	.105	.105	.104	.124		.138	.160	.009				8
9	.102	.083	.091	.105		.126	.148	-.003				9
10	.099	.085		.102		.119	.133	-.021				10
11	.097	.095		.098		.115						11
12	.094	.091		.102		.116	.127	-.036				12
13	.096	.092	.091	.097		.111	.126	-.020				13
14	.095	.094	.087	.091		.109	.116	-.052				14
15	.085	.066	.068	.071		.077	.092	-.123				15
16	.152	-.018	-.013	-.017		-.007	-.014	-.002				16
17		-.017	-.015	-.016		-.018	-.015	-.096				17
18		.120	.061	.044		.026	.129	.089				18
19	.048	.152	.149	.134		.150	.153	-.012				19
20			.143	.137		.138	.153	-.028				20
21	.100	.112	.137	.131		.142	.149	-.041				21
22	.080	.108	.146	.152		.143	.128	-.030				22
					α= 6		δ=- 5.0					
1	.823	.718	.748	.766		.679	.781	.861				1
2	.204	.268	.341	.382		.378	.402	.307				2
3	.181	.182	.226	.239		.266	.255	.076				3
4	.151	.154	.191	.208		.233	.234	.081				4
5	.140	.129	.156	.185		.215	.222	.039				5
6	.117	.123	.142	.166		.194	.204	.038				6
7	.116	.116	.128	.149		.172	.176	.024				7
8	.104	.100	.103	.125		.141	.162	.009				8
9	.102	.080	.091	.106		.128	.150	-.002				9
10	.098	.083		.103		.122	.137	-.019				10
11	.096	.092		.098		.118						11
12	.094	.089		.102		.118	.130	-.034				12
13	.096	.091	.091	.098		.113	.126	-.020				13
14	.096	.091	.086	.089		.114	.117	-.046				14
15	.084	.063	.068	.071		.079	.094	-.114				15
16	.144	-.041	-.028	-.050		-.012	-.044	-.003				16
17		-.039	-.044	-.050		-.042	-.042	-.095				17
18		.077	.063	.038		.032	.091	-.012				18
19	.005	.049	.048	.033		.057	.045	-.098				19
20			.037	.033		.033	.041	-.100				20
21	.041	.018	.030	.019		.032	.035	-.109				21
22	.010	.025	.042	.045		.040	.025	-.103				22

Table 2 Continued

Pressure coefficients on swept wing

Configuration 1 M=2.01 R=3.6 x 10^6

Orif	Station 1	2	3	4	24	5	6	7	8	9	10	Orif
					α= 6		δ= 0.0					
1	.827	.718	.745	.766		.684	.780	.867				1
2	.203	.269	.335	.382		.379	.399	.308				2
3	.179	.183	.223	.243		.266	.252	.074				3
4	.150	.154	.185	.208		.233	.230	.078				4
5	.139	.128	.156	.183		.214	.220	.040				5
6	.116	.123	.141	.166		.190	.203	.040				6
7	.116	.116	.127	.149		.172	.175	.026				7
8	.106	.102	.102	.122		.140	.158	.012				8
9	.101	.081	.091	.104		.124	.146	.001				9
10	.097	.083		.101		.119	.131	-.017				10
11	.096	.092		.095		.114						11
12	.093	.089		.100		.115	.127	-.031				12
13	.097	.089	.091	.097		.108	.126	-.017				13
14	.095	.090	.088	.090		.110	.118	-.038				14
15	.082	.063	.068	.073		.077	.093	-.071				15
16	.103	-.044	-.025	-.056		-.017	-.055	.014				16
17		-.045	-.055	-.063		-.056	-.055	-.079				17
18		.012	.026	.016		.019	.030	-.038				18
19	-.020	-.031	-.028	-.032		-.019	-.020	-.072				19
20			-.035	-.037		-.034	-.024	-.074				20
21	-.031	-.041	-.042	-.043		-.038	-.028	-.078				21
22	-.014	-.035	-.036	-.032		-.029	-.033	-.075				22
					α= 6		δ= 5.0					
1	.826	.717	.746	.768		.687	.779	.862				1
2	.202	.269	.339	.385		.381	.401	.309				2
3	.178	.182	.226	.244		.267	.253	.076				3
4	.151	.155	.190	.208		.234	.234	.083				4
5	.137	.127	.158	.185		.215	.222	.041				5
6	.115	.124	.142	.168		.193	.205	.039				6
7	.115	.117	.129	.151		.173	.176	.024				7
8	.105	.102	.103	.126		.141	.162	.010				8
9	.101	.080	.094	.107		.127	.149	.000				9
10	.095	.083		.105		.121	.134	-.019				10
11	.095	.092		.098		.117						11
12	.091	.088		.103		.116	.129	-.035				12
13	.095	.090	.094	.100		.111	.127	-.014				13
14	.094	.090	.089	.094		.112	.120	-.042				14
15	.081	.065	.070	.076		.080	.095	-.070				15
16	.093	-.045	-.022	-.057		-.014	-.060	.009				16
17		-.042	-.053	-.061		-.054	-.056	-.083				17
18		-.030	-.022	-.016		-.015	-.012	-.067				18
19	-.047	-.076	-.069	-.067		-.062	-.056	-.117				19
20			-.074	-.072		-.070	-.061	-.110				20
21	-.071	-.079	-.081	-.078		-.073	-.064	-.103				21
22	-.051	-.067	-.073	-.070		-.066	-.066	-.091				22
					α= 6		δ= 10.0					
1	.827	.718	.749	.767		.684	.778	.863				1
2	.202	.268	.340	.384		.385	.400	.312				2
3	.177	.182	.226	.242		.270	.253	.080				3
4	.149	.154	.191	.207		.235	.236	.086				4
5	.137	.127	.159	.186		.217	.224	.043				5
6	.114	.125	.146	.166		.194	.205	.036				6
7	.116	.118	.131	.149		.174	.177	.025				7
8	.104	.104	.106	.127		.143	.164	.009				8
9	.102	.080	.092	.106		.128	.151	.000				9
10	.098	.083		.104		.122	.138	-.019				10
11	.095	.091		.099		.118						11
12	.093	.089		.102		.117	.133	-.032				12
13	.097	.092	.093	.100		.113	.129	-.019				13
14	.095	.092	.091	.093		.113	.124	-.042				14
15	.084	.064	.070	.075		.081	.097	-.116				15
16	.081	-.037	-.023	-.060		-.014	-.063	.003				16
17		-.030	-.040	-.046		-.049	-.040	-.088				17
18		-.084	-.081	-.073		-.076	-.072	-.117				18
19	-.080	-.133	-.128	-.123		-.122	-.112	-.146				19
20			-.133	-.130		-.128	-.118	-.132				20
21	-.113	-.133	-.140	-.134		-.129	-.119	-.119				21
22	-.104	-.111	-.131	-.129		-.122	-.119	-.106				22

Table 2 Continued

Pressure coefficients on swept wing

Configuration 1 M=2.01 R=3.6 x 10^6

Orif	Station 1	2	3	4	24	5	6	7	8	9	10	Orif
					α=- 6	δ= 20.0						
1	.827	.719	.750	.767		.679	.780	.853				1
2	.203	.271	.343	.387		.386	.407	.315				2
3	.178	.186	.229	.242		.271	.258	.083				3
4	.149	.155	.192	.210		.240	.242	.087				4
5	.138	.131	.158	.187		.219	.229	.046				5
6	.117	.125	.145	.168		.197	.211	.037				6
7	.118	.118	.130	.151		.176	.182	.029				7
8	.106	.105	.106	.127		.146	.168	.010				8
9	.102	.085	.094	.107		.131	.154	.002				9
10	.100	.086		.106		.124	.141	-.015				10
11	.097	.095		.099		.122						11
12	.095	.093		.104		.121	.137	-.030				12
13	.099	.094	.094	.101		.116	.135	-.022				13
14	.099	.095	.091	.092		.116	.125	-.041				14
15	.086	.067	.072	.077		.085	.100	-.117				15
16	.069	.023	-.014	-.064		-.014	.015	-.004				16
17		.035	.008	-.071		-.029	.026	-.084				17
18		-.167	-.170	-.166		-.165	-.167	-.188				18
19	-.134	-.209	-.210	-.204		-.203	-.197	-.181				19
20			-.214	-.211		-.208	-.202	-.176				20
21	-.178	-.214	-.219	-.212		-.209	-.202	-.172				21
22	-.191	-.129	-.202	-.208		-.201	-.194	-.178				22
					α=- 6	δ= 30.0						
1	.824	.717	.747	.767		.673	.780	.847				1
2	.203	.270	.344	.390		.388	.411	.316				2
3	.177	.184	.228	.246		.276	.261	.089				3
4	.149	.156	.192	.214		.243	.246	.093				4
5	.138	.130	.161	.190		.226	.231	.051				5
6	.115	.126	.145	.174		.201	.216	.037				6
7	.117	.119	.131	.154		.179	.185	.031				7
8	.105	.105	.106	.128		.149	.171	.011				8
9	.102	.085	.095	.110		.135	.158	.000				9
10	.098	.087		.108		.127	.145	-.015				10
11	.097	.093		.102		.124						11
12	.095	.092		.107		.124	.140	-.028				12
13	.100	.094	.095	.104		.120	.137	-.008				13
14	.097	.094	.093	.095		.120	.129	-.017				14
15	.086	.068	.072	.077		.088	.105	-.030				15
16	.070	.062	.023	-.035		.012	.074	.096				16
17		.070	.019	-.031		.034	.041	.025				17
18		-.223	-.228	-.221		-.224	-.223	-.209				18
19	-.192	-.256	-.253	-.248		-.250	-.243	-.214				19
20			-.256	-.253		-.251	-.244	-.213				20
21	-.219	-.254	-.255	-.251		-.250	-.241	-.222				21
22	-.240	-.184	-.214	-.226		-.223	-.217	-.217				22
					α=- 3	δ= 0.0						
1	.846	.708	.735	.745		.736	.742	.917				1
2	.139	.190	.237	.268		.281	.315	.244				2
3	.114	.121	.175	.193		.210	.207	.023				3
4	.099	.094	.122	.137		.159	.143	.029				4
5	.089	.067	.088	.116		.142	.141	.021				5
6	.066	.066	.073	.095		.116	.124	.019				6
7	.068	.061	.065	.082		.100	.098	.021				7
8	.057	.050	.041	.059		.076	.086	.009				8
9	.052	.030	.033	.041		.062	.078	.010				9
10	.047	.031		.041		.056	.066	-.011				10
11	.046	.040		.037		.052						11
12	.043	.037		.039		.051	.062	-.021				12
13	.046	.040	.035	.039		.047	.061	-.007				13
14	.045	.039	.032	.033		.047	.052	-.007				14
15	.033	.017	.015	.019		.020	.033	-.055				15
16	.080	-.050	-.054	-.061		-.052	-.054	.061				16
17		-.042	-.052	-.056		-.053	-.053	-.046				17
18		-.025	-.017	-.024		-.022	-.021	-.033				18
19	-.051	-.068	-.068	-.072		-.065	-.066	-.075				19
20			-.071	-.075		-.077	-.069	-.066				20
21	-.068	-.076	-.082	-.082		-.081	-.072	-.072				21
22	-.046	-.068	-.074	-.074		-.074	-.076	-.073				22

Table 2 Continued

Pressure coefficients on swept wing

Configuration 1 M=2.01 R=3.6 x 10^6

Orif	Station 1	2	3	4	24	5	6	7	8	9	10	Orif
					α= 0		δ= -30.0					
1	.861	.699	.719	.708		.791	.680	.891				1
2	.088	.108	.139	.151		.149	.156	.106				2
3	.051	.062	.110	.122		.121	.128	.024				3
4	.051	.035	.060	.072		.090	.068	.023				4
5	.042	.012	.028	.051		.065	.059	.031				5
6	.019	.010	.015	.033		.049	.048	.021				6
7	.020	.007	.004	.017		.032	.030	.024				7
8	.017	-.001	-.014	-.001		.014	.021	.013				8
9	.010	-.017	-.024	-.017		.000	.012	.015				9
10	.001	-.016		-.017		-.006	.004	.000				10
11	.000	-.009		-.022		-.010						11
12	.001	-.011		-.021		-.010	.002	.117				12
13	-.004	-.009	-.016	-.023		-.007	.201	.160				13
14	.000	-.007	-.017	.076		.216	.247	.161				14
15	-.009	-.023	.165	.222		.250	.269	.176				15
16	.064	.127	.203	.230		.240	.273	.253				16
17		.099	.163	.191		.214	.222	.025				17
18		.133	.199	.233		.253	.270	.166				18
19	.284	.491	.365	.294		.280	.298	.196				19
20			.541	.444		.378	.373	.235				20
21	.297	.495	.604	.547		.465	.428	.260				21
22	.307	.451	.559	.540		.446	.379	.216				22
					α= 0		δ= -20.0					
1	.862	.701	.723	.709		.792	.684	.897				1
2	.091	.111	.144	.155		.153	.162	.111				2
3	.054	.065	.115	.123		.123	.133	.023				3
4	.055	.040	.064	.073		.094	.069	.025				4
5	.045	.016	.030	.053		.068	.062	.031				5
6	.021	.013	.015	.035		.051	.052	.021				6
7	.023	.011	.005	.020		.036	.035	.025				7
8	.019	.003	-.014	.002		.015	.025	.014				8
9	.011	-.014	-.023	-.016		.002	.015	.015				9
10	.005	-.014		-.015		-.002	.008	.000				10
11	.003	-.007		-.019		-.005						11
12	.004	-.007		-.018		-.006	.004	-.015				12
13	.001	-.005	-.015	-.020		-.010	-.001	.014				13
14	.003	-.003	-.016	-.022		-.011	-.007	.014				14
15	-.005	-.025	-.032	-.030		-.025	.030	.052				15
16	.061	.037	.074	.091		.089	.125	.203				16
17		.041	.088	.095		.102	.132	-.042				17
18		.082	.082	.086		.108	.126	.185				18
19	.095	.256	.225	.201		.189	.221	.124				19
20			.264	.251		.231	.258	.121				20
21	.130	.234	.275	.265		.257	.263	.114				21
22	.132	.214	.270	.265		.249	.221	.097				22
					α= 0		δ= -10.0					
1	.862	.699	.725	.710		.790	.687	.897				1
2	.091	.110	.146	.157		.157	.166	.114				2
3	.054	.064	.116	.125		.126	.134	.021				3
4	.054	.038	.064	.076		.095	.071	.023				4
5	.046	.014	.032	.054		.068	.065	.031				5
6	.021	.014	.018	.037		.055	.054	.020				6
7	.024	.008	.008	.020		.037	.036	.023				7
8	.019	.002	-.011	.003		.014	.026	.012				8
9	.010	-.015	-.021	-.014		.002	.017	.014				9
10	.004	-.014		-.014		-.004	.010	-.001				10
11	.003	-.007		-.017		-.006						11
12	.002	-.006		-.015		-.007	.006	-.008				12
13	.001	-.005	-.014	-.019		-.012	.002	.027				13
14	.002	-.003	-.014	-.021		-.012	-.006	.027				14
15	-.007	-.024	-.029	-.031		-.034	-.017	-.018				15
16	.041	-.021	-.038	-.030		-.044	-.020	.102				16
17		-.017	-.021	-.021		-.028	-.017	-.034				17
18		.033	.008	-.007		-.018	.011	.076				18
19	-.024	.049	.046	.021		.026	.023	.004				19
20			.043	.026		.015	.027	.002				20
21	.015	.026	.039	.021		.016	.021	-.009				21
22	-.004	.024	.046	.041		.023	.012	-.032				22

Table 2 Continued

Pressure coefficients on swept wing

Configuration 1 M=2.01 R=3.6 x 10^6

Orif	Station 1	2	3	4	24	5	6	7	8	9	10	Orif
					α= 0		δ= − 5.0					
1	.860	.701	.726	.711		.793	.689	.901				1
2	.092	.112	.146	.158		.160	.172	.121				2
3	.054	.063	.117	.125		.130	.139	.023				3
4	.054	.040	.067	.078		.098	.076	.025				4
5	.044	.015	.029	.056		.071	.068	.033				5
6	.023	.014	.017	.037		.055	.058	.023				6
7	.023	.011	.006	.021		.041	.041	.025				7
8	.018	.002	−.013	.003		.017	.029	.014				8
9	.012	−.014	−.022	−.013		.006	.021	.016				9
10	.006	−.013		−.013		.001	.019	.001				10
11	.004	−.006		−.017		−.002						11
12	.003	−.007		−.016		−.002	.010	−.004				12
13	.002	−.006	−.014	−.018		−.007	.005	.028				13
14	.002	−.002	−.015	−.019		−.008	−.002	.028				14
15	−.006	−.024	−.029	−.030		−.029	−.014	−.022				15
16	.039	−.043	−.064	−.054		−.061	−.042	.081				16
17		−.035	−.043	−.047		−.043	−.041	−.027				17
18		−.010	−.014	−.033		−.038	−.023	.002				18
19	−.055	−.037	−.043	−.062		−.051	−.056	−.048				19
20			−.048	−.062		−.069	−.061	−.055				20
21	−.050	−.057	−.054	−.069		−.073	−.068	−.064				21
22	−.058	−.046	−.044	−.050		−.064	−.070	−.086				22
					α= 0		δ= 0.0					
1	.864	.702	.727	.714		.789	.694	.907				1
2	.093	.114	.147	.157		.160	.174	.124				2
3	.054	.068	.118	.124		.133	.142	.025				3
4	.054	.041	.068	.077		.098	.077	.027				4
5	.044	.017	.028	.054		.075	.068	.037				5
6	.022	.015	.014	.036		.059	.058	.026				6
7	.024	.012	.004	.019		.042	.042	.029				7
8	.019	.002	−.013	.002		.019	.031	.018				8
9	.012	−.014	−.023	−.014		.008	.022	.021				9
10	.005	−.012		−.014		.002	.014	.003				10
11	.005	−.003		−.018		.000						11
12	.004	−.007		−.017		−.001	.014	.002				12
13	.003	−.002	−.014	−.018		−.006	.008	.027				13
14	.004	.000	−.016	−.020		−.006	.000	.027				14
15	−.006	−.022	−.032	−.032		−.028	−.013	−.022				15
16	.035	−.043	−.065	−.057		−.061	−.044	.081				16
17		−.036	−.047	−.050		−.043	−.041	−.023				17
18		−.056	−.057	−.064		−.059	−.059	−.039				18
19	−.069	−.095	−.100	−.110		−.103	−.102	−.073				19
20			−.105	−.116		−.116	−.108	−.071				20
21	−.092	−.104	−.114	−.120		−.120	−.110	−.074				21
22	−.070	−.090	−.104	−.108		−.112	−.112	−.077				22
					α= 0		δ= 5.0					
1	.861	.701	.725	.715		.790	.692	.906				1
2	.092	.111	.146	.159		.165	.176	.124				2
3	.054	.063	.117	.126		.134	.139	.020				3
4	.054	.040	.066	.080		.102	.077	.023				4
5	.044	.014	.031	.057		.072	.069	.033				5
6	.022	.014	.015	.040		.060	.061	.021				6
7	.024	.011	.006	.023		.043	.040	.025				7
8	.018	.001	−.011	.007		.021	.031	.014				8
9	.013	−.014	−.022	−.011		.008	.021	.015				9
10	.004	−.012		−.011		.002	.014	−.001				10
11	.003	−.006		−.014		−.001						11
12	.002	−.008		−.014		.000	.012	−.003				12
13	.003	−.005	−.014	−.015		−.006	.007	.026				13
14	.003	−.002	−.015	−.017		−.006	.000	.028				14
15	−.007	−.024	−.030	−.029		−.028	−.014	−.019				15
16	.016	−.036	−.056	−.057		−.059	−.031	.087				16
17		−.030	−.038	−.034		−.035	−.031	−.012				17
18		−.104	−.101	−.099		−.103	−.106	−.076				18
19	−.095	−.151	−.153	−.155		−.156	−.153	−.116				19
20			−.154	−.161		−.163	−.158	−.154				20
21	−.148	−.155	−.162	−.163		−.166	−.158	−.147				21
22	−.125	−.111	−.151	−.157		−.160	−.157	−.132				22

Table 2 Continued

Pressure coefficients on swept wing

Configuration 1 M=2.01 R=3.6 x 10^6

Orif	Station 1	2	3	4	24	5	6	7	8	9	10	Orif
					α= 0	δ= 10.0						
1	.861	.701	.724	.714		.792	.692	.909				1
2	.093	.112	.147	.161		.164	.177	.129				2
3	.057	.064	.117	.128		.134	.143	.021				3
4	.057	.039	.066	.080		.102	.079	.023				4
5	.045	.015	.031	.058		.074	.072	.034				5
6	.024	.014	.017	.040		.058	.062	.020				6
7	.024	.010	.007	.023		.042	.043	.027				7
8	.018	.002	-.011	.006		.020	.033	.015				8
9	.012	-.016	-.021	-.011		.010	.023	.017				9
10	.005	-.013		-.011		.003	.014	.001				10
11	.004	-.006		-.014		.000						11
12	.004	-.008		-.014		.000	.013	-.002				12
13	.003	-.003	-.013	-.015		-.004	.009	.023				13
14	.004	-.003	-.012	-.018		-.006	.002	.028				14
15	-.006	-.023	-.028	-.028		-.028	-.012	-.018				15
16	.001	-.007	-.028	-.055		-.081	-.008	.097				16
17		-.003	-.005	-.014		-.019	.010	.010				17
18		-.139	-.138	-.132		-.142	-.143	-.105				18
19	-.111	-.186	-.185	-.187		-.187	-.181	-.162				19
20			-.189	-.192		-.191	-.185	-.190				20
21	-.167	-.188	-.193	-.194		-.196	-.187	-.184				21
22	-.172	-.102	-.172	-.186		-.187	-.180	-.175				22
					α= 0	δ= 15.0						
1	.863	.702	.727	.715		.790	.694	.916				1
2	.093	.113	.148	.161		.165	.181	.134				2
3	.057	.065	.117	.126		.136	.145	.023				3
4	.056	.041	.068	.080		.104	.080	.027				4
5	.046	.017	.032	.056		.073	.074	.037				5
6	.023	.014	.017	.039		.061	.064	.025				6
7	.026	.013	.008	.024		.045	.045	.029				7
8	.019	.003	-.011	.006		.023	.035	.015				8
9	.011	-.014	-.020	-.011		.010	.026	.020				9
10	.006	-.011		-.011		.004	.016	.003				10
11	.005	-.003		-.014		.001						11
12	.003	-.007		-.013		.001	.014	-.002				12
13	.004	-.003	-.013	-.014		-.004	.010	.028				13
14	.005	-.002	-.014	-.016		-.004	.003	.028				14
15	-.005	-.022	-.027	-.029		-.026	-.006	-.014				15
16	.002	.026	-.007	-.019		-.070	.037	.102				16
17		.034	.023	.010		.004	.071	.022				17
18		-.171	-.171	-.170		-.176	-.177	-.135				18
19	-.144	-.215	-.218	-.215		-.216	-.208	-.197				19
20			-.219	-.222		-.220	-.215	-.219				20
21	-.181	-.219	-.223	-.223		-.223	-.216	-.213				21
22	-.205	-.119	-.178	-.207		-.209	-.199	-.211				22
					α= 0	δ= 20.0						
1	.862	.702	.728	.715		.789	.692	.920				1
2	.095	.114	.149	.163		.169	.184	.139				2
3	.057	.067	.119	.129		.138	.146	.021				3
4	.056	.041	.069	.081		.105	.081	.025				4
5	.046	.016	.032	.060		.077	.076	.035				5
6	.026	.015	.018	.041		.061	.066	.022				6
7	.025	.014	.007	.026		.045	.045	.025				7
8	.021	.004	-.011	.007		.022	.035	.014				8
9	.013	-.014	-.021	-.009		.011	.026	.018				9
10	.007	-.010		-.009		.004	.018	.001				10
11	.005	-.004		-.014		.002						11
12	.004	-.005		-.013		.002	.015	-.005				12
13	.006	-.002	-.013	-.014		-.004	.012	.025				13
14	.006	-.001	-.012	-.016		-.004	.004	.025				14
15	-.004	-.020	-.027	-.026		-.025	.052	-.007				15
16	.007	.041	.068	.086		.023	.149	.122				16
17		.051	.102	.099		.064	.167	.021				17
18		-.214	-.219	-.222		-.228	-.230	-.186				18
19	-.198	-.256	-.256	-.257		-.258	-.254	-.251				19
20			-.263	-.263		-.261	-.257	-.262				20
21	-.218	-.258	-.265	-.263		-.263	-.257	-.256				21
22	-.245	-.168	-.182	-.203		-.222	-.208	-.265				22

Table 2 Continued

Pressure coefficients on swept wing

Configuration 1 M=2.01 R=3.6 x 10^6

Orif	Station 1	2	3	4	24	5	6	7	8	9	10	Orif
					α= 0		δ= 30.0					
1	.860	.702	.725	.713		.790	.695	.919				1
2	.093	.113	.149	.163		.170	.185	.143				2
3	.056	.066	.120	.131		.136	.147	.022				3
4	.056	.040	.068	.082		.101	.082	.026				4
5	.045	.017	.033	.059		.077	.076	.034				5
6	.024	.014	.020	.041		.063	.066	.025				6
7	.025	.012	.008	.024		.046	.046	.027				7
8	.021	.004	-.008	.008		.023	.035	.016				8
9	.012	-.014	-.019	-.009		.011	.028	.020				9
10	.006	-.010		-.009		.005	.018	.003				10
11	.005	-.003		-.012		.001						11
12	.004	-.006		-.011		.002	.015	-.003				12
13	.006	-.002	-.011	-.014		-.003	.014	.058				13
14	.006	-.002	-.011	-.014		-.001	.012	.054				14
15	-.005	-.021	.122	.188		.217	.232	.090				15
16	.004	.122	.195	.225		.232	.242	.195				16
17		.119	.189	.224		.230	.238	.147				17
18		-.255	-.257	-.256		-.261	-.260	-.219				18
19	-.229	-.284	-.275	-.272		-.272	-.260	-.268				19
20			-.264	-.260		-.257	-.246	-.278				20
21	-.241	-.276	-.252	-.246		-.244	-.234	-.277				21
22	-.268	-.210	-.218	-.225		-.227	-.216	-.275				22
					α= 3		δ= 0.0					
1	.879	.677	.707	.631		.803	.601	.880				1
2	.052	.051	.079	.064		.081	.082	.074				2
3	.026	.018	.049	.053		.061	.072	.054				3
4	.021	-.006	.010	.023		.045	.045	.039				4
5	.011	-.023	-.017	.013		.029	.031	.019				5
6	-.006	-.029	-.024	-.006		.009	.009	.008				6
7	.000	-.023	-.030	-.014		-.003	-.005	.014				7
8	-.013	-.033	-.044	-.021		-.018	.005	.005				8
9	-.024	-.045	-.055	-.035		-.026	-.004	.003				9
10	-.025	-.041		-.030		-.020	-.008	-.014				10
11	-.030	-.031		-.035		-.023						11
12	-.028	-.028		-.040		-.022	-.006	-.065				12
13	-.025	-.027	-.037	-.046		-.021	-.017	-.018				13
14	-.024	-.021	-.041	-.037		-.031	-.023	-.026				14
15	-.029	-.043	-.051	-.043		-.052	-.018	-.086				15
16	-.022	-.019	-.035	-.044		-.030	-.037	.008				16
17		.014	-.023	-.044		-.041	-.025	-.129				17
18		-.052	-.065	-.051		-.069	-.052	-.046				18
19	-.054	-.086	-.085	-.079		-.085	-.073	-.084				19
20			-.087	-.087		-.082	-.073	-.092				20
21	-.100	-.079	-.094	-.085		-.084	-.071	-.090				21
22	-.068	-.056	-.080	-.082		-.077	-.069	-.090				22
					α= 6		δ= -30.0					
1	.895	.606	.644	.565		.830	.465	.935				1
2	.000	-.043	-.036	-.039		-.042	-.037	.000				2
3	-.043	-.064	-.044	-.037		-.050	-.037	-.017				3
4	-.042	-.094	-.078	-.073		-.070	-.077	-.052				4
5	-.047	-.099	-.094	-.075		-.074	-.081	-.051				5
6	-.062	-.092	-.102	-.093		-.085	-.088	-.060				6
7	-.065	-.092	-.110	-.101		-.095	-.101	-.064				7
8	-.060	-.094	-.125	-.113		-.105	-.111	-.074				8
9	-.073	-.105	-.134	-.125		-.113	-.115	-.079				9
10	-.077	-.101		-.123		-.117	-.120	-.101				10
11	-.080	-.094		-.129		-.118						11
12	-.081	-.095		-.128		-.103	.036	-.062				12
13	-.083	-.092	-.117	-.096		.058	.071	-.050				13
14	-.078	-.089	-.059	.065		.092	.091	-.039				14
15	-.086	-.060	.086	.096		.111	.109	-.025				15
16	-.074	.068	.098	.099		.105	.109	.094				16
17		.069	.088	-.023		-.007	.062	-.006				17
18		.060	.112	.113		.122	.120	-.007				18
19	.144	.284	.136	.106		.119	.122	.012				19
20			.268	.152		.133	.144	.054				20
21	.185	.366	.365	.210		.165	.171	.074				21
22	.189	.327	.393	.214		.154	.149	.089				22

Table 2 Continued

Pressure coefficients on swept wing

Configuration 1 M=2.01 R=3.6 x 10^6

Orif	Station 1	2	3	4	24	5	6	7	8	9	10	Orif
					α= 6	δ= -20.0						
1	.893	.608	.644	.565		.826	.467	.934				1
2	.000	-.045	-.035	-.037		-.044	-.036	.001				2
3	-.045	-.066	-.045	-.038		-.050	-.034	-.017				3
4	-.043	-.095	-.076	-.074		-.072	-.075	-.051				4
5	-.049	-.098	-.092	-.080		-.072	-.079	-.049				5
6	-.063	-.095	-.101	-.095		-.084	-.087	-.058				6
7	-.066	-.095	-.110	-.101		-.095	-.100	-.064				7
8	-.062	-.096	-.124	-.115		-.106	-.110	-.073				8
9	-.077	-.108	-.132	-.126		-.115	-.114	-.076				9
10	-.079	-.103		-.125		-.118	-.120	-.098				10
11	-.082	-.095		-.129		-.118						11
12	-.082	-.095		-.128		-.116	-.118	-.173				12
13	-.083	-.093	-.118	-.128		-.120	-.117	-.167				13
14	-.080	-.092	-.112	-.132		-.120	-.121	-.143				14
15	-.087	-.105	-.080	-.053		-.046	.008	-.157				15
16	-.082	-.003	.020	.026		.027	.038	-.008				16
17		-.007	.016	-.005		-.015	.014	-.112				17
18		.006	.030	.023		.035	.041	-.060				18
19	-.006	.111	.068	.033		.042	.049	-.133				19
20			.101	.061		.052	.068	-.125				20
21	.035	.120	.120	.074		.068	.079	-.105				21
22	.039	.108	.128	.076		.060	.064	-.074				22
					α= 6	δ= -10.0						
1	.891	.606	.646	.567		.826	.470	.931				1
2	-.005	-.043	-.033	-.037		-.041	-.034	.001				2
3	-.048	-.063	-.042	-.037		-.048	-.033	-.015				3
4	-.045	-.095	-.074	-.075		-.071	-.075	-.048				4
5	-.051	-.100	-.093	-.081		-.070	-.077	-.047				5
6	-.066	-.095	-.101	-.092		-.081	-.084	-.058				6
7	-.066	-.095	-.112	-.102		-.093	-.099	-.060				7
8	-.063	-.095	-.124	-.114		-.107	-.109	-.070				8
9	-.077	-.105	-.132	-.127		-.114	-.113	-.073				9
10	-.081	-.102		-.125		-.118	-.118	-.095				10
11	-.083	-.095		-.129		-.118						11
12	-.082	-.094		-.127		-.117	-.115	-.165				12
13	-.084	-.093	-.118	-.128		-.120	-.116	-.113				13
14	-.081	-.092	-.112	-.132		-.120	-.119	-.123				14
15	-.089	-.104	-.121	-.135		-.130	-.109	-.157				15
16	-.095	-.068	-.083	-.085		-.086	-.062	-.014				16
17		-.052	-.058	-.062		-.063	-.057	-.111				17
18		-.060	-.073	-.106		-.097	-.095	-.134				18
19	-.090	-.058	-.076	-.122		-.111	-.117	-.194				19
20			-.078	-.116		-.122	-.115	-.185				20
21	-.077	-.075	-.077	-.119		-.122	-.114	-.177				21
22	-.076	-.064	-.068	-.091		-.113	-.108	-.160				22
					α= 6	δ= - 5.0						
1	.895	.611	.648	.569		.825	.475	.931				1
2	.000	-.043	-.032	-.035		-.039	-.030	.006				2
3	-.042	-.065	-.041	-.036		-.045	-.030	-.013				3
4	-.041	-.094	-.073	-.071		-.068	-.073	-.045				4
5	-.047	-.097	-.093	-.078		-.068	-.074	-.044				5
6	-.062	-.092	-.101	-.091		-.082	-.084	-.055				6
7	-.064	-.092	-.111	-.099		-.094	-.097	-.056				7
8	-.061	-.093	-.124	-.113		-.103	-.105	-.066				8
9	-.073	-.104	-.133	-.124		-.113	-.109	-.070				9
10	-.078	-.099		-.123		-.115	-.117	-.093				10
11	-.080	-.094		-.127		-.115						11
12	-.080	-.093		-.126		-.115	-.115	-.154				12
13	-.082	-.091	-.118	-.126		-.118	-.111	-.102				13
14	-.080	-.089	-.113	-.130		-.117	-.113	-.111				14
15	-.086	-.104	-.117	-.124		-.122	-.093	-.151				15
16	-.095	-.073	-.083	-.080		-.074	-.056	-.014				16
17		-.054	-.061	-.061		-.055	-.054	-.108				17
18		-.114	-.116	-.155		-.144	-.151	-.189				18
19	-.128	-.139	-.151	-.188		-.176	-.182	-.220				19
20			-.154	-.184		-.184	-.182	-.213				20
21	-.134	-.156	-.153	-.187		-.185	-.180	-.205				21
22	-.121	-.113	-.131	-.154		-.171	-.160	-.190				22

Table 2 Continued

Pressure coefficients on swept wing

Configuration 1 M=2.01 R=3.6 x 10^6

Orif	Station 1	2	3	4	24	5	6	7	8	9	10	Orif
					α= 6		δ= 0.0					
1	.894	.610	.644	.569		.825	.481	.934				1
2	.006	-.033	-.020	-.022		-.020	-.012	.017				2
3	-.035	-.056	-.034	-.025		-.028	-.014	-.001				3
4	-.034	-.084	-.065	-.059		-.048	-.051	-.028				4
5	-.041	-.090	-.083	-.064		-.053	-.056	-.031				5
6	-.056	-.087	-.090	-.077		-.068	-.068	-.041				6
7	-.056	-.084	-.097	-.087		-.076	-.080	-.040				7
8	-.058	-.088	-.112	-.098		-.089	-.084	-.048				8
9	-.069	-.097	-.120	-.111		-.096	-.089	-.049				9
10	-.072	-.094		-.106		-.096	-.095	-.071				10
11	-.074	-.087		-.111		-.098						11
12	-.073	-.087		-.112		-.096	-.093	-.137				12
13	-.073	-.085	-.103	-.114		-.100	-.095	-.089				13
14	-.071	-.081	-.102	-.115		-.102	-.100	-.095				14
15	-.078	-.098	-.109	-.121		-.115	-.091	-.117				15
16	-.081	-.040	-.057	-.064		-.061	-.038	-.001				16
17		-.001	-.030	-.048		-.035	-.022	-.093				17
18		-.120	-.119	-.131		-.129	-.132	-.118				18
19	-.107	-.150	-.153	-.169		-.164	-.160	-.146				19
20			-.156	-.174		-.170	-.164	-.141				20
21	-.156	-.151	-.162	-.175		-.172	-.162	-.146				21
22	-.119	-.093	-.139	-.158		-.162	-.151	-.144				22
					α= 6		δ= 5.0					
1	.895	.610	.645	.571		.827	.478	.933				1
2	.002	-.042	-.031	-.031		-.034	-.026	.009				2
3	-.041	-.062	-.041	-.032		-.040	-.025	-.010				3
4	-.041	-.093	-.071	-.068		-.064	-.068	-.041				4
5	-.047	-.096	-.090	-.074		-.064	-.070	-.041				5
6	-.061	-.093	-.098	-.088		-.076	-.079	-.052				6
7	-.063	-.092	-.106	-.097		-.089	-.093	-.052				7
8	-.062	-.092	-.120	-.108		-.101	-.102	-.064				8
9	-.072	-.102	-.129	-.120		-.108	-.106	-.066				9
10	-.076	-.098		-.119		-.112	-.110	-.087				10
11	-.078	-.093		-.123		-.112						11
12	-.077	-.091		-.122		-.112	-.109	-.153				12
13	-.081	-.090	-.113	-.123		-.116	-.108	-.111				13
14	-.077	-.088	-.110	-.125		-.116	-.112	-.125				14
15	-.084	-.104	-.118	-.133		-.127	-.105	-.151				15
16	-.095	-.062	-.069	-.065		-.078	-.050	-.014				16
17		-.047	-.049	-.050		-.055	-.041	-.115				17
18		-.145	-.151	-.162		-.162	-.165	-.167				18
19	-.129	-.182	-.189	-.202		-.201	-.196	-.183				19
20			-.191	-.206		-.204	-.198	-.192				20
21	-.189	-.182	-.196	-.208		-.206	-.199	-.189				21
22	-.152	-.096	-.145	-.176		-.187	-.171	-.185				22
					α= 6		δ= 10.0					
1	.891	.607	.643	.571		.827	.476	.935				1
2	-.004	-.045	-.033	-.032		-.035	-.026	.010				2
3	-.048	-.066	-.042	-.031		-.041	-.026	-.009				3
4	-.046	-.096	-.073	-.068		-.064	-.070	-.041				4
5	-.052	-.100	-.090	-.073		-.064	-.071	-.039				5
6	-.065	-.095	-.097	-.087		-.078	-.080	-.050				6
7	-.066	-.094	-.108	-.096		-.088	-.095	-.053				7
8	-.066	-.095	-.121	-.110		-.103	-.102	-.062				8
9	-.077	-.105	-.129	-.121		-.110	-.108	-.063				9
10	-.081	-.100		-.120		-.114	-.112	-.085				10
11	-.083	-.095		-.122		-.113						11
12	-.083	-.095		-.122		-.112	-.111	-.149				12
13	-.084	-.092	-.112	-.123		-.116	-.108	-.110				13
14	-.081	-.090	-.111	-.126		-.117	-.113	-.123				14
15	-.089	-.104	-.119	-.132		-.122	-.084	-.149				15
16	-.099	-.054	-.046	-.027		-.035	-.007	-.004				16
17		-.045	-.028	-.018		-.014	.003	-.112				17
18		-.173	-.176	-.185		-.185	-.187	-.186				18
19	-.166	-.209	-.213	-.222		-.221	-.216	-.195				19
20			-.214	-.228		-.224	-.220	-.203				20
21	-.215	-.207	-.219	-.227		-.226	-.219	-.211				21
22	-.191	-.115	-.147	-.176		-.190	-.173	-.205				22

Table 2 Continued

Pressure coefficients on swept wing

Configuration 1 M= 2.01 R= 3.6 x 10^6

Orif	Station 1	2	3	4	24	5	6	7	8	9	10	Orif
					α= 6		δ= 20.0					
1	.894	.610	.646	.572		.829	.482	.934				1
2	-.001	-.041	-.030	-.033		-.034	-.023	.012				2
3	-.045	-.063	-.040	-.033		-.041	-.022	-.007				3
4	-.042	-.093	-.072	-.068		-.062	-.067	-.040				4
5	-.048	-.097	-.091	-.075		-.064	-.068	-.038				5
6	-.063	-.094	-.098	-.088		-.076	-.077	-.048				6
7	-.063	-.092	-.108	-.097		-.086	-.093	-.049				7
8	-.063	-.094	-.122	-.111		-.100	-.102	-.060				8
9	-.074	-.104	-.130	-.122		-.108	-.105	-.062				9
10	-.077	-.100		-.121		-.111	-.110	-.083				10
11	-.080	-.092		-.124		-.112						11
12	-.080	-.093		-.122		-.111	-.106	-.141				12
13	-.082	-.091	-.112	-.124		-.116	-.106	-.102				13
14	-.080	-.089	-.109	-.127		-.114	-.108	-.115				14
15	-.086	-.101	-.039	.006		.041	.055	-.132				15
16	-.093	.009	.043	.060		.069	.073	.011				16
17		.004	.040	.050		.069	.095	-.092				17
18		-.217	-.224	-.224		-.229	-.228	-.213				18
19	-.213	-.249	-.251	-.250		-.249	-.239	-.223				19
20			-.249	-.247		-.242	-.234	-.240				20
21	-.224	-.247	-.240	-.239		-.234	-.225	-.236				21
22	-.236	-.170	-.191	-.204		-.206	-.194	-.222				22
					α= 6		δ= 25.0					
1	.894	.610	.646	.571		.824	.486	.927				1
2	-.003	-.042	-.031	-.032		-.032	-.021	.012				2
3	-.044	-.064	-.041	-.033		-.041	-.021	-.008				3
4	-.042	-.095	-.073	-.069		-.062	-.065	-.039				4
5	-.050	-.098	-.091	-.075		-.063	-.068	-.037				5
6	-.064	-.095	-.100	-.087		-.077	-.075	-.048				6
7	-.064	-.093	-.109	-.097		-.087	-.091	-.050				7
8	-.064	-.095	-.123	-.110		-.100	-.100	-.060				8
9	-.077	-.104	-.132	-.121		-.106	-.105	-.062				9
10	-.079	-.100		-.121		-.110	-.112	-.083				10
11	-.081	-.094		-.123		-.111						11
12	-.082	-.094		-.122		-.110	-.108	-.137				12
13	-.082	-.092	-.114	-.123		-.114	-.106	-.098				13
14	-.080	-.089	-.112	-.127		-.085	-.044	-.119				14
15	-.087	-.096	.022	.052		.080	.085	-.112				15
16	-.091	.039	.066	.084		.096	.099	.035				16
17		.019	.042	.048		.066	.093	-.066				17
18		-.234	-.245	-.242		-.247	-.247	-.234				18
19	-.228	-.263	-.261	-.257		-.255	-.253	-.245				19
20			-.254	-.249		-.243	-.241	-.260				20
21	-.233	-.255	-.243	-.241		-.237	-.231	-.251				21
22	-.249	-.191	-.210	-.215		-.217	-.208	-.228				22
					α= 6		δ= 30.0					
1	.897	.610	.647	.572		.825	.488	.932				1
2	.001	-.041	-.029	-.029		-.032	-.021	.014				2
3	-.041	-.063	-.040	-.028		-.039	-.020	-.004				3
4	-.040	-.093	-.072	-.067		-.062	-.067	-.037				4
5	-.046	-.097	-.088	-.071		-.062	-.068	-.035				5
6	-.061	-.092	-.097	-.085		-.077	-.073	-.045				6
7	-.062	-.092	-.106	-.095		-.088	-.089	-.046				7
8	-.059	-.094	-.121	-.108		-.099	-.100	-.057				8
9	-.072	-.103	-.128	-.120		-.106	-.104	-.059				9
10	-.074	-.099		-.119		-.111	-.108	-.078				10
11	-.078	-.094		-.122		-.110						11
12	-.078	-.093		-.122		-.110	-.105	-.118				12
13	-.080	-.091	-.113	-.122		-.114	-.104	-.046				13
14	-.076	-.088	-.108	-.102		.027	.044	-.082				14
15	-.084	-.077	.061	.080		.093	.101	-.110				15
16	-.082	.064	.085	.102		.112	.120	.019				16
17		.026	.035	.015		.021	.014	-.074				17
18		-.258	-.264	-.257		-.263	-.253	-.248				18
19	-.240	-.280	-.264	-.261		-.261	-.252	-.259				19
20			-.253	-.252		-.250	-.242	-.262				20
21	-.249	-.261	-.247	-.245		-.245	-.235	-.245				21
22	-.264	-.213	-.230	-.232		-.230	-.221	-.225				22

Table 2 Continued

Pressure coefficients on swept wing

Configuration 1 M=2.01 R=3.6 x 10^6

Orif	Station 1	2	3	4	24	5	6	7	8	9	10	Orif
					α= 9		δ= 0.0					
1	.915	.526	.557	.489		.819	.362	.955				1
2	-.031	-.081	-.077	-.085		-.087	-.084	-.038				2
3	-.066	-.102	-.085	-.085		-.090	-.083	-.043				3
4	-.068	-.123	-.111	-.110		-.105	-.106	-.079				4
5	-.073	-.132	-.125	-.115		-.109	-.110	-.075				5
6	-.083	-.127	-.131	-.122		-.117	-.120	-.083				6
7	-.086	-.118	-.140	-.129		-.127	-.129	-.090				7
8	-.088	-.121	-.152	-.139		-.135	-.133	-.106				8
9	-.097	-.127	-.160	-.150		-.143	-.136	-.122				9
10	-.102	-.123		-.147		-.144	-.141	-.145				10
11	-.103	-.118		-.150		-.144						11
12	-.103	-.116		-.151		-.142	-.132	-.192				12
13	-.106	-.112	-.149	-.152		-.135	-.137	-.153				13
14	-.102	-.110	-.139	-.146		-.140	-.141	-.160				14
15	-.106	-.122	-.141	-.143		-.141	-.110	-.170				15
16	-.097	-.072	-.076	-.075		-.071	-.062	-.042				16
17		-.044	-.056	-.061		-.060	-.054	-.138				17
18		-.108	-.127	-.125		-.133	-.127	-.141				18
19	-.104	-.131	-.141	-.145		-.152	-.137	-.163				19
20			-.135	-.150		-.147	-.135	-.168				20
21	-.143	-.120	-.140	-.143		-.145	-.132	-.152				21
22	-.110	-.069	-.099	-.136		-.132	-.111	-.122				22
					α= 12		δ= -30.0					
1	.940	.371	.404	.027		.708	.182	1.007				1
2	-.081	-.172	-.176	-.184		-.193	-.200	-.197				2
3	-.123	-.187	-.181	-.184		-.190	-.190	-.198				3
4	-.127	-.204	-.197	-.195		-.199	-.199	-.212				4
5	-.129	-.210	-.199	-.200		-.203	-.203	-.251				5
6	-.140	-.216	-.209	-.205		-.206	-.206	-.269				6
7	-.146	-.205	-.214	-.210		-.209	-.213	-.287				7
8	-.146	-.193	-.222	-.215		-.217	-.215	-.290				8
9	-.154	-.194	-.228	-.224		-.220	-.218	-.294				9
10	-.157	-.187		-.220		-.222	-.219	-.282				10
11	-.158	-.179		-.220		-.224						11
12	-.157	-.177		-.220		-.219	-.205	-.292				12
13	-.160	-.173	-.229	-.137		-.147	-.125	-.265				13
14	-.158	-.172	-.086	-.085		-.111	-.088	-.270				14
15	-.160	-.047	-.060	-.060		-.061	-.049	-.259				15
16	-.144	-.010	-.060	-.049		-.053	-.048	.027				16
17		-.025	-.103	-.092		-.122	-.103	-.108				17
18		-.013	-.043	-.036		-.036	-.026	-.263				18
19	.004	.069	-.043	-.029		-.024	-.013	-.273				19
20			-.003	-.018		-.012	-.005	-.260				20
21	.048	.179	.045	-.002		.010	.007	-.249				21
22	.062	.166	.098	-.012		.011	-.011	-.239				22
					α= 12		δ= -20.0					
1	.939	.372	.408	.032		.708	.186	1.012				1
2	-.079	-.171	-.174	-.183		-.189	-.196	-.192				2
3	-.121	-.185	-.179	-.180		-.187	-.185	-.195				3
4	-.126	-.200	-.193	-.191		-.196	-.195	-.206				4
5	-.129	-.212	-.198	-.199		-.198	-.200	-.246				5
6	-.138	-.214	-.208	-.204		-.203	-.201	-.266				6
7	-.140	-.201	-.210	-.210		-.206	-.209	-.282				7
8	-.141	-.189	-.219	-.214		-.214	-.213	-.287				8
9	-.152	-.191	-.225	-.223		-.219	-.214	-.293				9
10	-.156	-.184		-.218		-.220	-.217	-.282				10
11	-.155	-.177		-.220		-.219						11
12	-.155	-.173		-.221		-.216	-.218	-.293				12
13	-.156	-.170	-.225	-.221		-.218	-.216	-.282				13
14	-.155	-.169	-.224	-.224		-.216	-.218	-.290				14
15	-.158	-.167	-.129	-.200		-.193	-.128	-.285				15
16	-.144	-.066	-.096	-.118		-.113	-.098	.003				16
17		-.028	-.041	-.079		-.116	-.085	-.165				17
18		-.054	-.089	-.103		-.100	-.097	-.273				18
19	-.082	-.029	-.075	-.100		-.097	-.101	-.285				19
20			-.070	-.096		-.104	-.095	-.286				20
21	-.064	-.017	-.060	-.093		-.100	-.090	-.266				21
22	-.054	-.019	-.054	-.083		-.095	-.088	-.248				22

Table 2 Continued

Pressure coefficients on swept wing

Configuration 1 M=2.01 R=3.6 x 10^6

Orif	Station 1	2	3	4	24	5	6	7	8	9	10	Orif
					α= 12		δ= -10.0					
1	.940	.372	.411	.037		.708	.185	1.013				1
2	-.080	-.171	-.172	-.181		-.187	-.196	-.188				2
3	-.122	-.185	-.177	-.181		-.187	-.187	-.189				3
4	-.126	-.203	-.192	-.190		-.193	-.195	-.198				4
5	-.127	-.210	-.199	-.197		-.195	-.199	-.237				5
6	-.138	-.215	-.206	-.201		-.201	-.203	-.258				6
7	-.142	-.198	-.209	-.206		-.205	-.208	-.271				7
8	-.143	-.189	-.218	-.211		-.212	-.213	-.271				8
9	-.151	-.190	-.226	-.219		-.217	-.213	-.276				9
10	-.155	-.182		-.217		-.219	-.217	-.277				10
11	-.154	-.177		-.218		-.219						11
12	-.156	-.172		-.219		-.217	-.213	-.281				12
13	-.155	-.170	-.225	-.219		-.219	-.216	-.270				13
14	-.155	-.169	-.224	-.218		-.217	-.219	-.274				14
15	-.159	-.179	-.214	-.219		-.208	-.172	-.275				15
16	-.140	-.111	-.139	-.139		-.133	-.116	.000				16
17		-.049	-.079	-.087		-.092	-.089	-.243				17
18		-.128	-.164	-.184		-.181	-.187	-.269				18
19	-.133	-.144	-.181	-.215		-.207	-.209	-.280				19
20			-.178	-.219		-.219	-.216	-.283				20
21	-.157	-.153	-.175	-.219		-.219	-.213	-.271				21
22	-.109	-.103	-.122	-.176		-.190	-.158	-.251				22
					α= 12		δ= - 5.0					
1	.940	.372	.409	.035		.713	.186	1.012				1
2	-.082	-.169	-.171	-.180		-.187	-.194	-.183				2
3	-.121	-.185	-.177	-.177		-.185	-.182	-.186				3
4	-.127	-.196	-.192	-.191		-.193	-.194	-.193				4
5	-.129	-.205	-.198	-.197		-.196	-.198	-.232				5
6	-.138	-.213	-.207	-.202		-.198	-.200	-.245				6
7	-.141	-.202	-.210	-.205		-.203	-.206	-.257				7
8	-.145	-.190	-.218	-.209		-.210	-.206	-.261				8
9	-.152	-.191	-.223	-.219		-.213	-.210	-.264				9
10	-.154	-.181		-.215		-.215	-.209	-.263				10
11	-.156	-.174		-.216		-.214						11
12	-.155	-.173		-.219		-.212	-.209	-.270				12
13	-.156	-.170	-.223	-.219		-.214	-.214	-.257				13
14	-.154	-.168	-.225	-.219		-.213	-.213	-.261				14
15	-.159	-.179	-.216	-.216		-.198	-.166	-.262				15
16	-.139	-.114	-.136	-.125		-.122	-.110	.003				16
17		-.061	-.090	-.090		-.089	-.088	-.242				17
18		-.162	-.195	-.203		-.205	-.211	-.258				18
19	-.158	-.191	-.218	-.239		-.234	-.233	-.266				19
20			-.217	-.245		-.242	-.236	-.273				20
21	-.198	-.195	-.219	-.245		-.243	-.236	-.260				21
22	-.150	-.108	-.129	-.177		-.193	-.160	-.240				22
					α= 12		δ= 0.0					
1	.943	.373	.415	.041		.711	.189	1.014				1
2	-.077	-.159	-.152	-.167		-.167	-.174	-.165				2
3	-.116	-.175	-.165	-.169		-.165	-.168	-.168				3
4	-.121	-.188	-.181	-.177		-.168	-.166	-.173				4
5	-.124	-.200	-.193	-.181		-.172	-.170	-.210				5
6	-.133	-.205	-.193	-.190		-.180	-.178	-.222				6
7	-.137	-.189	-.200	-.194		-.185	-.184	-.224				7
8	-.139	-.181	-.207	-.196		-.193	-.180	-.228				8
9	-.147	-.183	-.213	-.205		-.197	-.180	-.232				9
10	-.151	-.176		-.198		-.195	-.181	-.233				10
11	-.153	-.169		-.201		-.193						11
12	-.152	-.165		-.204		-.193	-.183	-.244				12
13	-.149	-.162	-.209	-.209		-.190	-.188	-.228				13
14	-.149	-.160	-.210	-.203		-.193	-.192	-.226				14
15	-.153	-.172	-.199	-.195		-.182	-.144	-.232				15
16	-.131	-.105	-.124	-.110		-.105	-.103	.005				16
17		-.060	-.086	-.088		-.080	-.080	-.215				17
18		-.167	-.199	-.198		-.196	-.202	-.228				18
19	-.164	-.198	-.218	-.219		-.226	-.217	-.236				19
20			-.215	-.225		-.229	-.219	-.248				20
21	-.201	-.198	-.217	-.224		-.231	-.217	-.234				21
22	-.165	-.115	-.145	-.175		-.184	-.166	-.219				22

Table 2 Continued

Pressure coefficients on swept wing

Configuration 1 M=2.01 R=3.6 x 10^6

Orif	Station 1	2	3	4	24	5	6	7	8	9	10	Orif
					α= 12		δ= 0.0					
1	.955	.384	.382	.343		.758	.220	1.001				1
2	-.079	-.152	-.153	-.164		-.167	-.173	-.152				2
3	-.108	-.172	-.161	-.161		-.165	-.162	-.155				3
4	-.116	-.185	-.177	-.178		-.174	-.176	-.171				4
5	-.116	-.192	-.186	-.181		-.179	-.177	-.197				5
6	-.127	-.197	-.189	-.187		-.183	-.182	-.212				6
7	-.127	-.183	-.195	-.191		-.188	-.189	-.218				7
8	-.127	-.176	-.204	-.195		-.195	-.189	-.225				8
9	-.140	-.176	-.209	-.204		-.201	-.193	-.235				9
10	-.142	-.170		-.201		-.199	-.197	-.238				10
11	-.143	-.162		-.203		-.199						11
12	-.142	-.162		-.204		-.197	-.194	-.261				12
13	-.143	-.156	-.206	-.207		-.196	-.198	-.243				13
14	-.140	-.154	-.206	-.204		-.200	-.200	-.252				14
15	-.147	-.167	-.191	-.195		-.173	-.143	-.255				15
16	-.156	-.095	-.115	-.102		-.096	-.095	-.092				16
17		-.041	-.071	-.080		-.071	-.069	-.235				17
18		-.174	-.198	-.203		-.203	-.209	-.247				18
19	-.157	-.203	-.223	-.237		-.235	-.231	-.251				19
20			-.222	-.242		-.237	-.237	-.264				20
21	-.208	-.203	-.223	-.243		-.238	-.233	-.251				21
22	-.171	-.100	-.134	-.170		-.185	-.160	-.231				22
					α= 12		δ= 5.0					
1	.954	.380	.378	.347		.762	.221	1.005				1
2	-.082	-.160	-.160	-.168		-.175	-.178	-.163				2
3	-.111	-.174	-.165	-.164		-.170	-.169	-.167				3
4	-.122	-.188	-.181	-.180		-.180	-.183	-.180				4
5	-.122	-.200	-.191	-.186		-.182	-.184	-.212				5
6	-.131	-.203	-.195	-.189		-.189	-.187	-.230				6
7	-.133	-.189	-.197	-.194		-.192	-.195	-.239				7
8	-.131	-.177	-.208	-.201		-.198	-.197	-.247				8
9	-.142	-.179	-.214	-.209		-.204	-.200	-.255				9
10	-.145	-.173		-.204		-.206	-.203	-.255				10
11	-.147	-.165		-.208		-.205						11
12	-.146	-.163		-.208		-.202	-.202	-.274				12
13	-.149	-.160	-.212	-.208		-.203	-.203	-.252				13
14	-.144	-.156	-.212	-.209		-.203	-.204	-.266				14
15	-.149	-.168	-.172	-.173		-.136	-.119	-.266				15
16	-.155	-.090	-.107	-.088		-.082	-.083	-.077				16
17		-.036	-.061	-.064		-.056	-.057	-.251				17
18		-.195	-.218	-.222		-.223	-.228	-.259				18
19	-.176	-.224	-.241	-.253		-.252	-.250	-.267				19
20			-.241	-.257		-.255	-.253	-.276				20
21	-.233	-.224	-.242	-.249		-.255	-.246	-.265				21
22	-.193	-.123	-.155	-.184		-.189	-.176	-.243				22
					α= 12		δ= 10.0					
1	.953	.384	.382	.342		.762	.224	1.005				1
2	-.081	-.157	-.159	-.170		-.176	-.179	-.161				2
3	-.110	-.173	-.164	-.165		-.171	-.168	-.167				3
4	-.119	-.189	-.182	-.182		-.182	-.183	-.180				4
5	-.119	-.198	-.191	-.187		-.183	-.185	-.212				5
6	-.128	-.201	-.194	-.193		-.188	-.186	-.231				6
7	-.129	-.185	-.200	-.194		-.192	-.194	-.245				7
8	-.129	-.177	-.209	-.200		-.198	-.199	-.249				8
9	-.140	-.177	-.214	-.211		-.203	-.201	-.257				9
10	-.146	-.171		-.205		-.203	-.203	-.256				10
11	-.146	-.165		-.208		-.204						11
12	-.146	-.162		-.207		-.203	-.203	-.273				12
13	-.148	-.158	-.215	-.208		-.202	-.203	-.272				13
14	-.143	-.156	-.213	-.211		-.203	-.203	-.292				14
15	-.149	-.167	-.151	-.148		-.108	-.098	-.285				15
16	-.152	-.080	-.102	-.081		-.070	-.071	-.086				16
17		-.020	-.047	-.048		-.039	-.038	-.278				17
18		-.204	-.230	-.230		-.231	-.234	-.293				18
19	-.194	-.234	-.252	-.258		-.257	-.252	-.303				19
20			-.250	-.256		-.253	-.250	-.305				20
21	-.243	-.235	-.241	-.244		-.250	-.239	-.272				21
22	-.208	-.138	-.172	-.193		-.195	-.179	-.255				22

Table 2 Concluded

Pressure coefficients on swept wing

Configuration 1 M=2.01 R=3.6 x 10^6

Orif	Station 1	2	3	4	24	5	6	7	8	9	10	Orif
					α= 12		δ= 15.0					
1	.953	.380	.382	.345		.762	.222	1.009				1
2	-.082	-.163	-.164	-.172		-.181	-.184	-.161				2
3	-.112	-.177	-.169	-.169		-.176	-.172	-.171				3
4	-.122	-.193	-.185	-.185		-.187	-.189	-.188				4
5	-.122	-.203	-.193	-.192		-.189	-.189	-.219				5
6	-.132	-.205	-.198	-.197		-.193	-.191	-.238				6
7	-.136	-.191	-.203	-.199		-.197	-.202	-.263				7
8	-.131	-.180	-.213	-.205		-.203	-.201	-.271				8
9	-.146	-.179	-.218	-.217		-.210	-.205	-.282				9
10	-.147	-.175		-.214		-.212	-.206	-.276				10
11	-.149	-.168		-.214		-.209						11
12	-.149	-.166		-.212		-.207	-.207	-.288				12
13	-.148	-.163	-.220	-.215		-.209	-.206	-.270				13
14	-.147	-.160	-.216	-.218		-.206	-.205	-.288				14
15	-.150	-.164	-.116	-.095		-.069	-.065	-.282				15
16	-.144	-.063	-.091	-.064		-.051	-.052	-.083				16
17		.009	-.050	-.056		-.021	.010	-.274				17
18		-.247	-.264	-.272		-.268	-.274	-.288				18
19	-.250	-.279	-.292	-.287		-.283	-.260	-.297				19
20			-.289	-.246		-.247	-.230	-.297				20
21	-.278	-.281	-.238	-.232		-.230	-.223	-.266				21
22	-.272	-.187	-.215	-.230		-.225	-.216	-.252				22
					α= 12		δ= 20.0					
1	.952	.378	.382	.346		.762	.227	1.013				1
2	-.083	-.163	-.168	-.172		-.180	-.183	-.158				2
3	-.113	-.178	-.171	-.168		-.175	-.170	-.165				3
4	-.122	-.193	-.186	-.185		-.184	-.186	-.183				4
5	-.121	-.201	-.194	-.192		-.186	-.187	-.214				5
6	-.134	-.208	-.198	-.194		-.192	-.190	-.234				6
7	-.135	-.193	-.203	-.199		-.196	-.198	-.260				7
8	-.131	-.181	-.213	-.203		-.202	-.201	-.269				8
9	-.146	-.182	-.219	-.213		-.208	-.203	-.281				9
10	-.148	-.175		-.210		-.210	-.206	-.274				10
11	-.148	-.169		-.213		-.209						11
12	-.148	-.166		-.210		-.207	-.205	-.287				12
13	-.150	-.164	-.219	-.215		-.207	-.204	-.274				13
14	-.146	-.161	-.217	-.215		-.192	-.183	-.295				14
15	-.152	-.157	-.100	-.080		-.053	-.051	-.284				15
16	-.136	-.051	-.085	-.050		-.038	-.034	-.083				16
17		-.010	-.093	-.091		-.059	.055	-.274				17
18		-.256	-.272	-.271		-.273	-.277	-.293				18
19	-.257	-.285	-.293	-.277		-.275	-.257	-.304				19
20			-.283	-.244		-.242	-.232	-.297				20
21	-.272	-.283	-.243	-.235		-.234	-.226	-.272				21
22	-.276	-.199	-.227	-.232		-.227	-.221	-.260				22
					α= 15		δ= 0.0					
1	.944	.373	.417	.040		.716	.196	1.015				1
2	-.079	-.170	-.171	-.178		-.186	-.192	-.175				2
3	-.120	-.183	-.177	-.179		-.183	-.181	-.179				3
4	-.124	-.199	-.194	-.190		-.191	-.194	-.193				4
5	-.127	-.209	-.200	-.196		-.194	-.197	-.226				5
6	-.139	-.213	-.205	-.202		-.199	-.200	-.248				6
7	-.141	-.201	-.211	-.207		-.204	-.208	-.275				7
8	-.143	-.190	-.218	-.212		-.210	-.213	-.284				8
9	-.150	-.190	-.225	-.222		-.216	-.213	-.293				9
10	-.151	-.183		-.218		-.219	-.215	-.282				10
11	-.155	-.177		-.219		-.218						11
12	-.153	-.172		-.219		-.217	-.214	-.293				12
13	-.153	-.170	-.224	-.220		-.216	-.213	-.275				13
14	-.153	-.170	-.221	-.219		-.184	-.161	-.285				14
15	-.151	-.157	-.099	-.079		-.053	-.055	-.275				15
16	-.104	-.048	-.084	-.062		-.039	-.029	.012				16
17		-.050	-.143	-.119		-.121	.067	-.245				17
18		-.246	-.268	-.247		-.262	-.261	-.287				18
19	-.240	-.265	-.265	-.247		-.252	-.250	-.296				19
20			-.249	-.246		-.244	-.241	-.286				20
21	-.249	-.248	-.245	-.242		-.244	-.237	-.274				21
22	-.249	-.195	-.224	-.225		-.225	-.218	-.265				22

Table 3

Pressure coefficients on swept wing

Configuration 3 M=2.01 R=3.6 x 10^6

Orif	Station 1	2	3	4	24	5	6	7	8	9	10	Orif
					α=-15		δ= 0.0					
1	.609	.711	.753	.631		.169	.606	.192				1
2	.407	.552	.586	.613		.630	.652	.549				2
3	.395	.446	.502	.494		.549	.572	.402				3
4	.373	.386	.432	.470		.508	.516	.298				4
5	.342	.360	.396	.430		.469	.481	.224				5
6	.319	.333	.369	.404		.431	.451	.187				6
7	.314	.318	.347	.374		.397	.405	.157				7
8	.295	.294	.305	.338		.356	.390	.139				8
9	.298	.270	.284	.310		.345	.379	.117				9
10	.289	.276		.308		.339	.366	.098				10
11	.291	.287		.306		.341						11
12	.290	.280		.310		.343	.360	.045				12
13	.279	.286	.289	.307		.337	.352	.067				13
14	.280	.276	.288	.294		.334	.344	.034				14
15	.267	.238	.251	.266		.276	.289	-.091				15
16	.479	.056	.100	.126		.226	.303	.007				16
17		-.007	-.042	.002								17
18		.336	.345	.282		.210	.186	-.034				18
19	.109	.114	.113	.111	.099	.144	.161	-.065				19
20	.137	.106	.109	.130	.139	.137	.150	-.062				20
21	.119	.106	.111	.161	.138	.137	.143	-.068				21
22	.115	.122	.112	.115	.104	.127	.127	-.050				22
					α=-12		δ=-30.0					
1	.695	.717	.816	.690		.343	.688	.412				1
2	.351	.477	.517	.548		.543	.571	.478				2
3	.326	.360	.415	.401		.461	.469	.313				3
4	.292	.311	.350	.389		.424	.432	.232				4
5	.269	.289	.320	.351		.384	.398	.164				5
6	.253	.261	.294	.326		.356	.374	.138				6
7	.248	.250	.276	.300		.327	.335	.104				7
8	.230	.226	.242	.270		.284	.314	.088				8
9	.232	.205	.216	.246		.271	.301	.068				9
10	.217	.211		.241		.263	.287	.050				10
11	.219	.219		.236		.261						11
12	.225	.215		.236		.347	.293	.004				12
13	.213	.220	.217	.509		.408	.332	.028				13
14	.219	.213	.469	.568		.410	.343	.006				14
15	.204	.238	.561	.587		.365	.309	-.097				15
16	.371	.440	.544	.451		.350	.340	.001				16
17		.011	.130	.320								17
18		.523	.549	.586		.330	.184	-.049				18
19	.566	.957	.852	.575	-.117	.326	.211	-.079				19
20	.632	.900	1.030	.702	-.113	.311	.259	-.080				20
21	.654	.842	.983	.629	-.196	.286	.274	-.064				21
22	.591	.753	.794	.362	-.173	.215	.228	-.034				22
					α=-12		δ=-20.0					
1	.697	.720	.817	.694		.341	.688	.405				1
2	.353	.479	.519	.551		.547	.576	.482				2
3	.328	.365	.419	.405		.467	.472	.316				3
4	.293	.313	.353	.390		.426	.437	.234				4
5	.272	.290	.323	.354		.389	.405	.167				5
6	.256	.266	.297	.330		.359	.377	.140				6
7	.249	.253	.279	.301		.330	.339	.106				7
8	.232	.231	.243	.273		.289	.316	.090				8
9	.234	.208	.219	.246		.272	.304	.071				9
10	.219	.211		.242		.266	.291	.051				10
11	.222	.220		.240		.263						11
12	.224	.216		.239		.264	.284	.005				12
13	.212	.222	.222	.236		.257	.276	.025				13
14	.216	.217	.220	.226		.259	.269	-.001				14
15	.203	.178	.190	.211		.212	.229	-.109				15
16	.374	.153	.102	.436		.184	.247	-.007				16
17		.057	.069	.178								17
18		.506	.631	.574		.152	.131	-.059				18
19	.319	.603	.680	.465	-.010	.157	.104	-.089				19
20	.380	.546	.616	.367	.162	.213	.097	-.091				20
21	.421	.511	.598	.322	-.128	.232	.092	-.093				21
22	.384	.488	.538	.226	-.099	.218	.115	-.083				22

Table 3 Continued

Pressure coefficients on swept wing

Configuration 3 M=2.01 R=3.6 x 10^6

Orif	Station 1	2	3	4	24	5	6	7	8	9	10	Orif
					α=-12		δ= -10.0					
1	.696	.721	.815	.689		.338	.686	.399				1
2	.350	.480	.517	.551		.551	.575	.479				2
3	.326	.362	.417	.403		.469	.472	.315				3
4	.292	.310	.353	.391		.428	.432	.233				4
5	.272	.290	.322	.356		.390	.402	.167				5
6	.255	.264	.295	.328		.361	.373	.138				6
7	.250	.251	.276	.301		.328	.335	.106				7
8	.231	.228	.244	.276		.289	.315	.091				8
9	.234	.207	.220	.247		.274	.301	.070				9
10	.222	.210		.243		.267	.288	.053				10
11	.222	.220		.241		.264						11
12	.225	.216		.239		.265	.280	.004				12
13	.214	.221	.222	.235		.257	.273	.022				13
14	.217	.215	.220	.229		.261	.267	-.003				14
15	.202	.176	.191	.205		.211	.226	-.110				15
16	.372	.036	.059	.139		.166	.238	-.006				16
17		-.006	-.038	.007								17
18		.459	.499	.408		.149	.132	-.059				18
19	.161	.310	.324	.208	.160	.090	.104	-.096				19
20	.230	.280	.309	.181	.161	.086	.097	-.097				20
21	.246	.261	.305	.170	.063	.100	.089	-.098				21
22	.185	.258	.289	.120	-.053	.132	.076	-.083				22
					α=-12		δ= - 5.0					
1	.693	.717	.814	.688		.335	.687	.397				1
2	.349	.474	.513	.548		.548	.574	.479				2
3	.324	.359	.413	.402		.465	.473	.316				3
4	.291	.307	.351	.390		.424	.434	.233				4
5	.269	.287	.320	.354		.388	.404	.164				5
6	.253	.262	.294	.329		.357	.375	.140				6
7	.247	.249	.276	.302		.326	.339	.104				7
8	.226	.225	.243	.272		.289	.317	.089				8
9	.231	.204	.217	.246		.275	.303	.069				9
10	.217	.208		.242		.268	.289	.050				10
11	.218	.217		.238		.263						11
12	.219	.211		.236		.266	.283	.003				12
13	.207	.218	.221	.232		.259	.275	.025				13
14	.213	.209	.218	.226		.260	.268	-.007				14
15	.200	.174	.190	.201		.212	.224	-.114				15
16	.368	.024	.058	.098		.166	.236	-.012				16
17		-.028	-.055	-.016								17
18		.366	.390	.316		.150	.131	-.065				18
19	.103	.174	.176	.124	.094	.090	.103	-.092				19
20	.153	.161	.166	.126	.143	.085	.094	-.099				20
21	.163	.145	.168	.101	.140	.086	.090	-.103				21
22	.103	.153	.166	.077	-.041	.094	.074	-.089				22
					α=-12		δ= 0.0					
1	.699	.719	.818	.690		.334	.687	.399				1
2	.350	.476	.514	.550		.547	.574	.481				2
3	.323	.360	.416	.402		.462	.472	.315				3
4	.291	.310	.352	.388		.425	.434	.233				4
5	.269	.286	.322	.353		.387	.404	.166				5
6	.251	.264	.295	.330		.356	.375	.140				6
7	.245	.250	.276	.301		.327	.337	.107				7
8	.227	.227	.242	.274		.287	.318	.089				8
9	.229	.204	.217	.245		.273	.302	.069				9
10	.219	.207		.242		.266	.288	.050				10
11	.220	.219		.239		.265						11
12	.220	.210		.237		.265	.282	.002				12
13	.210	.218	.219	.235		.256	.273	.019				13
14	.212	.211	.218	.227		.259	.267	-.005				14
15	.200	.173	.191	.204		.210	.223	-.114				15
16	.365	.021	.056	.076		.162	.237	-.007				16
17		-.038	-.065	-.026								17
18		.266	.286	.218		.150	.130	-.062				18
19	.059	.058	.059	.056	.050	.089	.103	-.098				19
20	.081	.053	.051	.073	.081	.081	.095	-.096				20
21	.055	.045	.054	.105	.087	.081	.090	-.104				21
22	.060	.062	.053	.064	.056	.077	.073	-.090				22

Table 3 Continued

Pressure coefficients on swept wing

Configuration 3 M=2.01 R=3.6 x 10^6

Orif	Station 1	2	3	4	24	5	6	7	8	9	10	Orif
					α=-12		δ= 5.0					
1	.697	.717	.769	.691		.353	.683	.417				1
2	.346	.462	.501	.538		.531	.560	.467				2
3	.310	.346	.392	.388		.452	.457	.299				3
4	.283	.294	.336	.378		.410	.423	.218				4
5	.259	.272	.307	.338		.370	.392	.154				5
6	.241	.248	.277	.315		.340	.363	.126				6
7	.234	.238	.263	.288		.314	.323	.092				7
8	.218	.213	.226	.259		.273	.304	.075				8
9	.219	.190	.203	.233		.260	.288	.058				9
10	.212	.194		.228		.250	.277	.040				10
11	.214	.202		.225		.250						11
12	.212	.196		.224		.249	.269	-.005				12
13	.195	.201	.210	.221		.242	.261	.012				13
14	.199	.197	.205	.211		.243	.252	-.003				14
15	.191	.163	.173	.191		.197	.209	-.106				15
16	.342	.031	.045	.049		.146	.219	-.011				16
17		-.083	-.090	-.056								17
18		.149	.178	.110		.140	.118	-.079				18
19	-.012	-.046	-.045	-.041	-.034	.074	.090	-.099				19
20	-.017	-.050	-.050	-.043	.020	.068	.083	-.100				20
21	-.042	-.057	-.050	.029	-.006	.066	.073	-.101				21
22	-.097	-.038	-.052	-.105	-.041	.061	.061	-.091				22
					α=-12		δ= 10.0					
1	.693	.721	.771	.690		.347	.675	.406				1
2	.343	.467	.505	.542		.541	.567	.470				2
3	.314	.352	.401	.398		.460	.463	.299				3
4	.285	.299	.343	.385		.416	.424	.212				4
5	.262	.277	.312	.343		.378	.393	.155				5
6	.243	.254	.287	.321		.347	.367	.124				6
7	.232	.240	.270	.295		.322	.326	.089				7
8	.219	.220	.233	.264		.278	.305	.073				8
9	.223	.196	.210	.239		.264	.290	.054				9
10	.212	.197		.233		.254	.278	.037				10
11	.213	.207		.231		.252						11
12	.213	.200		.229		.252	.273	-.008				12
13	.199	.204	.214	.229		.245	.262	.020				13
14	.202	.197	.212	.217		.249	.255	-.008				14
15	.191	.165	.181	.193		.200	.210	-.104				15
16	.355	.012	.048	.041		.148	.220	-.006				16
17		-.029	-.070	-.042								17
18		.068	.094	.015		.139	.115	-.072				18
19	-.090	-.133	-.130	-.119	-.048	.074	.085	-.092				19
20	-.097	-.138	-.139	-.112	-.041	.064	.079	-.095				20
21	-.136	-.146	-.136	-.055	-.065	.061	.071	-.100				21
22	-.118	-.116	-.132	-.168	-.092	.054	.055	-.088				22
					α=-12		δ= 20.0					
1	.693	.721	.775	.687		.336	.677	.392				1
2	.349	.473	.512	.543		.543	.569	.473				2
3	.320	.359	.409	.397		.461	.467	.308				3
4	.289	.303	.348	.388		.420	.431	.225				4
5	.267	.280	.316	.346		.382	.400	.160				5
6	.249	.257	.290	.324		.351	.372	.132				6
7	.239	.247	.272	.297		.322	.331	.097				7
8	.220	.224	.236	.268		.281	.311	.082				8
9	.225	.200	.212	.240		.270	.297	.063				9
10	.217	.203		.237		.259	.286	.043				10
11	.218	.214		.234		.259						11
12	.219	.206		.232		.259	.277	-.003				12
13	.201	.212	.217	.233		.253	.269	.021				13
14	.206	.207	.214	.224		.253	.261	.001				14
15	.197	.172	.183	.199		.204	.216	-.104				15
16	.357	.015	.052	.035		.160	.228	-.004				16
17		-.008	-.064	-.033								17
18		-.019	-.010	-.053		.146	.122	-.072				18
19	-.112	-.173	-.170	-.150	-.048	.082	.094	-.087				19
20	-.125	-.176	-.175	-.160	-.048	.074	.087	-.096				20
21	-.164	-.176	-.177	-.129	-.091	.069	.081	-.096				21
22	-.147	-.139	-.172	-.195	-.099	.061	.066	-.080				22

Table 3 - Continued

Pressure coefficients on swept wing

Configuration 3 M=2.01 R=3.6 x 10^6

Orif	Station 1	2	3	4	24	5	6	7	8	9	10	Orif
					α=-12		δ= 30.0					
1	.692	.720	.771	.690		.335	.677	.389				1
2	.347	.470	.511	.545		.543	.570	.474				2
3	.320	.358	.407	.402		.463	.470	.311				3
4	.290	.302	.347	.389		.422	.435	.228				4
5	.267	.282	.318	.349		.383	.403	.164				5
6	.249	.258	.292	.327		.355	.374	.135				6
7	.240	.245	.273	.299		.326	.331	.099				7
8	.222	.223	.239	.272		.283	.314	.085				8
9	.225	.199	.214	.243		.270	.298	.067				9
10	.218	.202		.239		.262	.287	.048				10
11	.220	.214		.237		.260						11
12	.220	.206		.234		.263	.280	.000				12
13	.201	.212	.220	.233		.254	.272	.027				13
14	.206	.206	.217	.225		.256	.265	.004				14
15	.196	.172	.187	.201		.208	.222	-.101				15
16	.355	.023	.056	.027		.166	.233	-.004				16
17		.012	-.056	-.021								17
18		-.148	-.140	-.165		.147	.127	-.057				18
19	-.176	-.254	-.250	-.231	-.052	.086	.099	-.085				19
20	-.190	-.258	-.256	-.251	-.058	.077	.094	-.086				20
21	-.199	-.254	-.258	-.256	-.118	.072	.086	-.093				21
22	-.228	-.187	-.226	-.254	-.108	.062	.069	-.082				22
					α=- 9		δ= 0.0					
1	.776	.721	.829	.743		.540	.733	.656				1
2	.253	.356	.421	.455		.432	.471	.378				2
3	.240	.249	.281	.292		.360	.336	.181				3
4	.203	.218	.258	.293		.320	.329	.138				4
5	.189	.191	.226	.256		.290	.299	.094				5
6	.171	.178	.202	.232		.261	.279	.072				6
7	.163	.166	.188	.210		.236	.247	.047				7
8	.146	.149	.159	.182		.203	.227	.028				8
9	.145	.128	.139	.162		.186	.214	.013				9
10	.143	.130		.157		.178	.199	-.004				10
11	.145	.139		.153		.178						11
12	.138	.134		.154		.178	.192	-.037				12
13	.141	.140	.140	.149		.167	.186	-.018				13
14	.140	.134	.140	.142		.170	.181	-.041				14
15	.126	.107	.115	.124		.134	.146	-.134				15
16	.236	-.020	.001	-.001		.088	.143	-.021				16
17		-.055	-.071	-.045								17
18		.186	.220	.146		.082	.062	-.091				18
19	.003	-.001	.002	-.003	-.011	.026	.036	-.115				19
20	.019	-.004	-.004	.008	.014	.017	.029	-.114				20
21	.000	-.007	-.006	.040	.023	.013	.025	-.114				21
22	.004	.002	-.004	.004	-.005	.014	.011	-.106				22
					α= 6		δ=-30.0					
1	.811	.716	.828	.774		.668	.753	.828				1
2	.198	.266	.336	.366		.356	.381	.300				2
3	.173	.182	.218	.227		.262	.240	.070				3
4	.143	.150	.179	.205		.230	.235	.078				4
5	.133	.124	.151	.177		.203	.215	.038				5
6	.115	.115	.133	.159		.179	.195	.028				6
7	.106	.106	.119	.142		.159	.171	.015				7
8	.091	.089	.094	.118		.131	.153	.000				8
9	.090	.072	.078	.098		.118	.142	-.010				9
10	.088	.071		.094		.113	.128	-.028				10
11	.087	.082		.089		.108						11
12	.086	.077		.090		.110	.121	-.040				12
13	.086	.084	.076	.089		.104	.117	-.032				13
14	.086	.080	.132	.347		.149	.112	-.052				14
15	.074	.069	.347	.379		.153	.089	-.118				15
16	.177	.260	.344	.296		.148	.124	-.004				16
17		-.019	.027	.161								17
18		.323	.343	.388		.099	.008	-.094				18
19	.414	.722	.619	.402	-.164	.094	-.018	-.115				19
20	.400	.703	.790	.513	-.169	.119	-.017	-.111				20
21	.474	.653	.784	.521	-.208	.140	-.006	-.112				21
22	.414	.606	.675	.315	-.192	.102	.009	-.108				22

Table 3 Continued

Pressure coefficients on swept wing

Configuration 3 M=2.01 R=3.6 x 10^6

Orif	Station 1	2	3	4	24	5	6	7	8	9	10	Orif
					α=- 6		δ= -20.0					
1	.811	.715	.829	.773		.669	.751	.824				1
2	.199	.266	.336	.369		.364	.382	.301				2
3	.174	.181	.220	.227		.264	.238	.067				3
4	.143	.151	.182	.207		.233	.239	.075				4
5	.133	.124	.153	.178		.205	.217	.038				5
6	.115	.115	.135	.161		.184	.197	.025				6
7	.107	.106	.120	.143		.164	.173	.013				7
8	.093	.090	.095	.120		.133	.152	-.004				8
9	.091	.072	.079	.099		.121	.142	-.011				9
10	.089	.072		.095		.111	.129	-.029				10
11	.088	.084		.091		.109						11
12	.085	.078		.092		.111	.122	-.040				12
13	.087	.084	.079	.089		.100	.117	-.031				13
14	.086	.080	.079	.082		.105	.111	-.051				14
15	.073	.055	.059	.064		.070	.085	-.112				15
16	.173	.082	-.019	.144		.040	.090	-.004				16
17		-.022	-.031	.034								17
18		.257	.363	.336		.022	.008	-.093				18
19	.186	.414	.457	.278	-.078	-.029	-.019	-.112				19
20	.210	.386	.434	.234	.043	-.034	-.024	-.116				20
21	.263	.355	.425	.215	-.168	-.007	-.028	-.111				21
22	.215	.335	.386	.143	-.140	.057	-.040	-.103				22
					α=- 6		δ=-10.0					
1	.809	.715	.824	.772		.666	.753	.823				1
2	.197	.264	.333	.370		.359	.383	.300				2
3	.171	.180	.220	.223		.261	.242	.070				3
4	.142	.145	.177	.204		.231	.240	.075				4
5	.131	.121	.153	.177		.204	.217	.040				5
6	.114	.115	.132	.158		.181	.199	.025				6
7	.105	.101	.120	.144		.159	.173	.013				7
8	.092	.089	.095	.118		.135	.153	-.004				8
9	.092	.070	.079	.096		.119	.142	-.011				9
10	.088	.071		.094		.112	.131	-.029				10
11	.089	.082		.089		.111						11
12	.084	.076		.090		.112	.125	-.041				12
13	.087	.084	.078	.088		.104	.118	-.036				13
14	.084	.079	.080	.081		.108	.112	-.056				14
15	.072	.051	.059	.063		.073	.087	-.133				15
16	.164	-.014	-.038	.003		.038	.084	-.009				16
17		-.049	-.061	-.034								17
18		.234	.323	.230		.025	.006	-.096				18
19	.038	.151	.159	.063	.032	-.029	-.019	-.119				19
20	.085	.141	.148	.049	.032	-.036	-.023	-.116				20
21	.105	.126	.148	.042	-.049	-.035	-.028	-.112				21
22	.064	.117	.145	.014	-.093	-.028	-.038	-.107				22
					α=- 6		δ=- 5.0					
1	.811	.715	.825	.772		.667	.752	.826				1
2	.195	.263	.332	.367		.363	.382	.301				2
3	.170	.178	.217	.225		.262	.240	.072				3
4	.141	.146	.177	.204		.232	.240	.078				4
5	.131	.123	.153	.176		.206	.217	.039				5
6	.114	.117	.133	.158		.182	.197	.026				6
7	.106	.105	.120	.142		.163	.170	.016				7
8	.093	.089	.097	.118		.132	.152	-.001				8
9	.093	.069	.079	.096		.122	.143	-.009				9
10	.089	.072		.093		.113	.129	-.029				10
11	.089	.080		.088		.110						11
12	.085	.076		.090		.110	.123	-.038				12
13	.089	.084	.079	.088		.101	.116	-.036				13
14	.086	.082	.079	.080		.106	.115	-.055				14
15	.074	.055	.059	.064		.073	.085	-.130				15
16	.159	-.023	-.038	-.010		.038	.082	-.009				16
17		-.051	-.064	-.045								17
18		.184	.250	.158		.024	.010	-.093				18
19	-.002	.047	.045	.001	-.026	-.027	-.018	-.119				19
20	.030	.042	.033	.005	.008	-.034	-.022	-.114				20
21	.039	.030	.038	-.013	.001	-.037	-.028	-.112				21
22	.000	.030	.037	-.022	-.110	-.035	-.038	-.106				22

Table 3 Continued

Pressure coefficients on swept wing

Configuration 3 M=2.01 R=3.6 x 10^6

Orif	Station 1	2	3	4	24	5	6	7	8	9	10	Orif
					α=- 6		δ= 0.0					
1	.811	.715	.828	.769		.671	.750	.822				1
2	.195	.263	.330	.366		.359	.382	.301				2
3	.166	.176	.217	.222		.261	.238	.065				3
4	.141	.146	.176	.202		.232	.235	.070				4
5	.130	.120	.149	.174		.204	.213	.037				5
6	.113	.112	.130	.156		.180	.195	.023				6
7	.103	.101	.117	.140		.161	.166	.013				7
8	.091	.089	.092	.116		.131	.148	-.003				8
9	.090	.070	.074	.095		.119	.138	-.013				9
10	.088	.069		.091		.109	.125	-.028				10
11	.086	.078		.086		.104						11
12	.083	.074		.088		.107	.118	-.040				12
13	.087	.082	.075	.085		.098	.115	-.038				13
14	.082	.077	.076	.078		.103	.109	-.055				14
15	.069	.053	.057	.063		.067	.080	-.119				15
16	.144	-.032	-.041	-.015		.028	.077	-.008				16
17		-.049	-.063	-.048								17
18		.111	.160	.072		.021	.002	-.103				18
19	-.040	-.053	-.050	-.065	-.068	-.033	-.026	-.119				19
20	-.029	-.055	-.056	-.057	-.049	-.039	-.031	-.115				20
21	-.049	-.059	-.057	-.020	-.036	-.039	-.036	-.107				21
22	-.043	-.052	-.059	-.050	-.060	-.040	-.049	-.116				22
					α=- 6		δ= 5.0					
1	.808	.716	.810	.769		.669	.745	.809				1
2	.197	.265	.334	.370		.364	.383	.303				2
3	.172	.177	.217	.225		.269	.239	.071				3
4	.142	.146	.179	.208		.236	.241	.074				4
5	.129	.121	.148	.175		.206	.215	.040				5
6	.112	.114	.130	.158		.184	.196	.022				6
7	.102	.104	.119	.142		.163	.169	.015				7
8	.089	.090	.093	.117		.130	.151	-.005				8
9	.090	.070	.076	.096		.118	.140	-.013				9
10	.085	.069		.093		.109	.126	-.030				10
11	.085	.080		.089		.106						11
12	.081	.073		.089		.108	.118	-.043				12
13	.082	.078	.078	.087		.099	.113	-.030				13
14	.081	.079	.076	.080		.104	.108	-.043				14
15	.067	.052	.055	.062		.071	.081	-.111				15
16	.169	-.030	-.039	-.024		.029	.078	-.001				16
17		-.062	-.071	-.055								17
18		.044	.081	.002		.022	.003	-.087				18
19	-.079	-.123	-.120	-.116	-.110	-.037	-.026	-.111				19
20	-.085	-.122	-.127	-.126	-.086	-.040	-.032	-.111				20
21	-.112	-.125	-.127	-.099	-.096	-.041	-.033	-.112				21
22	-.102	-.113	-.126	-.140	-.119	-.045	-.046	-.105				22
					α= 6		δ= 10.0					
1	.811	.713	.806	.770		.674	.748	.815				1
2	.186	.253	.322	.360		.357	.375	.296				2
3	.162	.170	.212	.223		.259	.232	.064				3
4	.135	.135	.173	.199		.225	.229	.068				4
5	.121	.112	.142	.168		.197	.205	.036				5
6	.104	.106	.123	.150		.174	.187	.022				6
7	.095	.096	.112	.135		.155	.163	.010				7
8	.083	.082	.088	.112		.124	.146	-.005				8
9	.082	.064	.071	.093		.111	.131	-.014				9
10	.082	.063		.089		.101	.119	-.033				10
11	.079	.076		.083		.099						11
12	.076	.069		.085		.100	.114	-.045				12
13	.082	.073	.073	.084		.093	.106	-.023				13
14	.076	.073	.071	.075		.097	.103	-.031				14
15	.066	.046	.052	.057		.066	.076	-.090				15
16	.116	-.042	-.040	-.016		.026	.074	.021				16
17		-.046	-.054	-.046								17
18		-.006	.013	-.042		.016	-.001	-.079				18
19	-.097	-.155	-.152	-.133	-.109	-.034	-.025	-.097				19
20	-.096	-.156	-.155	-.148	-.104	-.037	-.030	-.101				20
21	-.129	-.152	-.156	-.129	-.114	-.040	-.035	-.101				21
22	-.132	-.133	-.154	-.163	-.127	-.042	-.046	-.097				22

Table 3, Continued

Pressure coefficients on swept wing

Configuration 3 M=2.01 R=3.6 x 10^6

Orif	Station 1	2	3	4	24	5	6	7	8	9	10	Orif
					α=- 6	δ= 20.0						
1	.809	.712	.807	.764		.674	.746	.815				1
2	.188	.251	.320	.358		.355	.376	.294				2
3	.163	.167	.212	.221		.260	.233	.062				3
4	.134	.135	.172	.200		.225	.230	.067				4
5	.121	.112	.143	.167		.199	.206	.033				5
6	.104	.106	.122	.150		.175	.189	.019				6
7	.094	.096	.111	.133		.156	.162	.009				7
8	.084	.082	.087	.110		.127	.145	-.010				8
9	.083	.063	.069	.089		.114	.135	-.016				9
10	.083	.064		.087		.104	.120	-.035				10
11	.079	.075		.082		.103						11
12	.077	.069		.086		.102	.114	-.046				12
13	.081	.073	.071	.081		.097	.110	-.028				13
14	.077	.071	.071	.073		.099	.102	-.050				14
15	.067	.046	.052	.056		.066	.079	-.101				15
16	.103	-.015	-.018	.018		.033	.077	-.005				16
17		-.014	-.012	-.004								17
18		-.081	-.068	-.105		.017	.001	-.090				18
19	-.131	-.200	-.198	-.168	-.122	-.034	-.025	-.106				19
20	-.157	-.203	-.199	-.195	-.119	-.037	-.031	-.112				20
21	-.176	-.197	-.202	-.185	-.142	-.038	-.037	-.104				21
22	-.183	-.145	-.181	-.209	-.144	-.039	-.045	-.101				22
					α=- 6	δ= 30.0						
1	.809	.713	.805	.767		.675	.746	.816				1
2	.187	.253	.322	.362		.357	.376	.299				2
3	.163	.169	.212	.224		.260	.235	.064				3
4	.134	.135	.173	.200		.226	.234	.071				4
5	.121	.113	.145	.169		.201	.210	.035				5
6	.103	.106	.127	.150		.177	.192	.022				6
7	.096	.096	.114	.135		.157	.164	.012				7
8	.084	.085	.090	.113		.126	.147	-.006				8
9	.085	.066	.071	.093		.112	.134	-.013				9
10	.083	.066		.089		.106	.122	-.033				10
11	.080	.077		.084		.104						11
12	.076	.069		.086		.103	.117	-.044				12
13	.081	.075	.075	.085		.096	.112	-.031				13
14	.079	.074	.072	.076		.100	.108	-.050				14
15	.069	.050	.054	.060		.068	.079	-.106				15
16	.093	.028	.031	.096		.045	.093	-.007				16
17		.027	.047	.101								17
18		-.148	-.145	-.162		.020	.002	-.090				18
19	-.175	-.240	-.234	-.205	-.131	-.032	-.024	-.107				19
20	-.197	-.244	-.229	-.231	-.129	-.036	-.028	-.104				20
21	-.208	-.232	-.227	-.228	-.159	-.036	-.034	-.106				21
22	-.222	-.175	-.201	-.231	-.149	-.038	-.043	-.102				22
					α= 3	δ= 0.0						
1	.830	.695	.837	.752		.734	.714	.873				1
2	.117	.163	.206	.240		.241	.274	.221				2
3	.092	.101	.147	.166		.176	.178	-.006				3
4	.074	.066	.097	.119		.136	.120	-.007				4
5	.064	.042	.070	.089		.105	.114	-.005				5
6	.049	.043	.050	.074		.092	.100	-.010				6
7	.039	.034	.041	.059		.078	.078	-.017				7
8	.036	.024	.018	.034		.053	.054	-.031				8
9	.032	.007	.006	.015		.038	.047	-.033				9
10	.028	.008		.012		.025	.034	-.050				10
11	.026	.017		.007		.023						11
12	.025	.012		.011		.023	.029	-.056				12
13	.028	.018	.005	.013		.014	.029	-.032				13
14	.022	.014	.009	.004		.024	.027	-.047				14
15	.013	-.004	-.009	-.013		-.004	-.002	-.087				15
16	.017	-.046	-.074	-.028		-.044	.000	.056				16
17		-.036	-.055	-.042								17
18		.023	.064	-.031		-.046	-.068	-.122				18
19	-.090	-.115	-.123	-.138	-.132	-.102	-.102	-.100				19
20	-.088	-.118	-.130	-.141	-.137	-.116	-.107	-.098				20
21	-.108	-.124	-.124	-.124	-.141	-.116	-.111	-.128				21
22	-.094	-.100	-.116	-.115	-.126	-.104	-.106	-.115				22

Table 3 Continued

Pressure coefficients on swept wing

Configuration 3 M=2.01 R=3.6 x 10^6

Orif	Station 1	2	3	4	24	5	6	7	8	9	10	Orif
					α= 0		δ= -30.0					
1	.843	.702	.723	.731		.774	.675	.844				1
2	.083	.103	.137	.145		.147	.153	.112				2
3	.045	.056	.103	.112		.112	.127	.020				3
4	.042	.028	.054	.063		.082	.071	.015				4
5	.033	.007	.022	.045		.061	.056	.023				5
6	.018	.004	.006	.027		.043	.046	.015				6
7	.012	-.001	-.007	.011		.029	.029	.019				7
8	.007	-.011	-.022	-.005		.010	.017	.006				8
9	.001	-.025	-.036	-.024		-.003	.013	.009				9
10	-.007	-.023		-.024		-.011	.002	-.009				10
11	-.008	-.014		-.030		-.013						11
12	-.007	-.018		-.027		-.012	-.001	-.016				12
13	-.009	-.012	-.030	-.031		-.017	-.006	.013				13
14	-.009	-.013	.000	.115		-.014	-.013	.025				14
15	-.015	-.015	.185	.197		-.033	-.024	-.023				15
16	.064	.171	.188	.170		-.029	.002	.098				16
17		.025	.035	.137								17
18		.196	.186	.204		-.057	-.086	-.050				18
19	.275	.500	.410	.244	-.197	-.083	-.112	-.071				19
20	.264	.537	.560	.320	-.190	-.075	-.115	-.091				20
21	.310	.496	.586	.345	-.214	-.063	-.116	-.102				21
22	.272	.455	.527	.226	-.182	-.025	-.126	-.093				22
					α= 0		δ= -20.0					
1	.841	.699	.723	.732		.774	.677	.847				1
2	.082	.103	.135	.149		.149	.158	.115				2
3	.045	.059	.103	.114		.115	.130	.022				3
4	.041	.028	.055	.068		.084	.073	.014				4
5	.032	.007	.022	.046		.064	.058	.025				5
6	.014	.003	.009	.030		.044	.047	.017				6
7	.012	-.002	-.005	.014		.033	.033	.021				7
8	.007	-.013	-.021	-.003		.011	.021	.007				8
9	.001	-.027	-.034	-.021		-.002	.014	.009				9
10	-.005	-.025		-.021		-.010	.006	-.010				10
11	-.007	-.015		-.027		-.013						11
12	-.007	-.020		-.025		-.011	.000	-.010				12
13	-.008	-.013	-.026	-.027		-.015	-.006	.023				13
14	-.008	-.013	-.023	-.030		-.013	-.010	.031				14
15	-.016	-.035	-.039	-.041		-.037	-.023	-.017				15
16	.055	.026	-.045	.052		-.050	-.004	.103				16
17		-.013	-.015	.029								17
18		.129	.125	.112		-.074	-.086	-.048				18
19	.073	.247	.272	.107	-.119	-.115	-.109	-.061				19
20	.091	.242	.268	.093	-.067	-.122	-.112	-.086				20
21	.131	.221	.268	.087	-.191	-.124	-.117	-.098				21
22	.096	.199	.250	.048	-.176	-.115	-.124	-.088				22
					α= 0		δ= -10.0					
1	.842	.699	.719	.732		.774	.677	.846				1
2	.083	.103	.139	.148		.150	.158	.115				2
3	.047	.059	.106	.112		.116	.132	.019				3
4	.042	.031	.058	.066		.087	.075	.013				4
5	.033	.007	.023	.044		.065	.059	.026				5
6	.015	.004	.008	.027		.046	.050	.017				6
7	.013	.001	-.005	.013		.035	.035	.018				7
8	.009	-.009	-.021	-.003		.012	.022	.005				8
9	.003	-.025	-.034	-.021		-.002	.015	.009				9
10	-.004	-.021		-.022		-.008	.006	-.010				10
11	-.006	-.014		-.027		-.010						11
12	-.006	-.016		-.027		-.009	.001	-.008				12
13	-.007	-.012	-.025	-.029		-.013	-.005	.015				13
14	-.006	-.012	-.025	-.029		-.012	-.008	.027				14
15	-.015	-.033	-.040	-.042		-.035	-.023	-.025				15
16	.052	-.028	-.064	-.015		-.052	-.014	.096				16
17		-.035	-.044	-.034								17
18		.087	.090	.023		-.071	-.087	-.055				18
19	-.038	.040	.036	-.045	-.071	-.115	-.108	-.074				19
20	-.009	.035	.030	-.048	-.073	-.120	-.112	-.069				20
21	.013	.025	.031	-.056	-.098	-.124	-.115	-.103				21
22	-.023	.018	.031	-.067	-.162	-.121	-.123	-.095				22

Table 3 Continued

Pressure coefficients on swept wing

Configuration 3 M=2.01 R=3.6 x 10^6

Orif	Station 1	2	3	4	24	5	6	7	8	9	10	Orif
					α= 0		δ= - 5.0					
1	.841	.700	.722	.732		.771	.678	.846				1
2	.083	.102	.135	.149		.152	.157	.117				2
3	.047	.058	.104	.112		.115	.129	.020				3
4	.040	.029	.054	.065		.085	.074	.016				4
5	.032	.008	.023	.046		.062	.058	.026				5
6	.015	.004	.008	.027		.044	.050	.017				6
7	.012	-.001	-.007	.013		.032	.035	.020				7
8	.009	-.010	-.022	-.003		.012	.021	.007				8
9	.001	-.026	-.035	-.022		-.001	.016	.011				9
10	-.004	-.024		-.023		-.007	.007	-.008				10
11	-.006	-.014		-.028		-.011						11
12	-.008	-.017		-.026		-.010	.003	-.007				12
13	-.010	-.013	-.027	-.028		-.014	-.003	.019				13
14	-.007	-.012	-.025	-.029		-.013	-.007	.031				14
15	-.016	-.035	-.040	-.040		-.034	-.021	-.023				15
16	.048	-.038	-.065	-.022		-.054	-.013	.095				16
17		-.038	-.048	-.039								17
18		.054	.061	-.010		-.073	-.085	-.053				18
19	-.061	-.037	-.040	-.088	-.106	-.115	-.108	-.072				19
20	-.048	-.040	-.046	-.085	-.094	-.121	-.111	-.090				20
21	-.044	-.044	-.046	-.096	-.098	-.124	-.115	-.104				21
22	-.065	-.044	-.044	-.096	-.148	-.122	-.123	-.093				22
					α= 0		δ= 0.0					
1	.842	.700	.724	.736		.774	.680	.846				1
2	.086	.103	.139	.151		.154	.159	.115				2
3	.048	.059	.106	.114		.118	.130	.020				3
4	.043	.030	.056	.068		.087	.073	.014				4
5	.033	.009	.023	.049		.067	.058	.023				5
6	.016	.007	.011	.031		.049	.048	.015				6
7	.014	.001	-.001	.013		.035	.035	.019				7
8	.011	-.010	-.020	-.001		.013	.020	.007				8
9	.001	-.023	-.033	-.020		.000	.016	.009				9
10	-.004	-.020		-.021		-.007	.007	-.010				10
11	-.006	-.013		-.026		-.009						11
12	-.005	-.017		-.025		-.009	.001	-.009				12
13	-.006	-.011	-.026	-.026		-.014	-.004	.022				13
14	-.006	-.012	-.023	-.029		-.013	-.010	.027				14
15	-.014	-.033	-.038	-.038		-.036	-.023	-.024				15
16	.043	-.041	-.063	-.025		-.054	-.015	.098				16
17		-.041	-.048	-.041								17
18		.008	.022	-.044		-.072	-.086	-.055				18
19	-.083	-.113	-.116	-.127	-.130	-.116	-.109	-.072				19
20	-.079	-.115	-.120	-.123	-.119	-.121	-.113	-.094				20
21	-.101	-.115	-.119	-.121	-.134	-.125	-.116	-.104				21
22	-.089	-.106	-.118	-.115	-.123	-.123	-.124	-.096				22
					α= 0		δ= 5.0					
1	.843	.702	.813	.741		.776	.662	.839				1
2	.070	.088	.121	.133		.137	.140	.096				2
3	.037	.046	.093	.101		.101	.116	.018				3
4	.032	.015	.042	.058		.073	.064	.007				4
5	.023	-.006	.012	.037		.055	.046	.014				5
6	.005	-.010	-.002	.015		.038	.034	.008				6
7	-.001	-.012	-.013	.002		.020	.016	.012				7
8	-.002	-.020	-.031	-.015		-.002	.009	-.004				8
9	-.012	-.035	-.043	-.031		-.014	.002	-.001				9
10	-.013	-.033		-.034		-.021	-.008	-.018				10
11	-.017	-.024		-.038		-.024						11
12	-.017	-.028		-.037		-.022	-.012	-.023				12
13	-.015	-.023	-.035	-.039		-.025	-.015	.007				13
14	-.015	-.022	-.033	-.040		-.025	-.021	.022				14
15	-.026	-.044	-.048	-.049		-.047	-.037	-.033				15
16	-.030	-.054	-.066	-.042		-.064	-.025	.094				16
17		-.044	-.050	-.048								17
18		-.033	-.027	-.075		-.082	-.096	-.072				18
19	-.101	-.150	-.150	-.151	-.153	-.126	-.119	-.082				19
20	-.114	-.152	-.153	-.157	-.139	-.132	-.124	-.100				20
21	-.146	-.148	-.155	-.168	-.152	-.134	-.127	-.108				21
22	-.124	-.122	-.151	-.150	-.147	-.135	-.134	-.101				22

Table 3 Continued

Pressure coefficients on swept wing

Configuration 3 M=2.01 R=3.6 x 10^6

Orif	Station 1	2	3	4	24	5	6	7	8	9	10	Orif
					α= 0		δ= 10.0					
1	.840	.699	.815	.728		.772	.667	.844				1
2	.076	.096	.131	.144		.146	.150	.110				2
3	.041	.050	.101	.107		.110	.124	.016				3
4	.037	.020	.049	.064		.080	.069	.010				4
5	.026	-.003	.019	.041		.060	.052	.018				5
6	.009	-.004	.003	.022		.042	.040	.010				6
7	.004	-.009	-.010	.007		.027	.025	.014				7
8	.001	-.017	-.025	-.010		.005	.015	-.002				8
9	-.006	-.032	-.038	-.026		-.009	.010	.004				9
10	-.013	-.029		-.028		-.015	.001	-.013				10
11	-.013	-.020		-.032		-.017						11
12	-.014	-.026		-.032		-.016	-.005	-.017				12
13	-.013	-.020	-.031	-.034		-.022	-.010					13
14	-.013	-.019	-.028	-.034		-.018	-.015					14
15	-.025	-.040	-.046	-.046		-.042	-.032	-.019				15
16	.010	-.043	-.054	-.044		-.057	-.018	.103				16
17		-.038	-.039	-.037								17
18		-.077	-.074	-.115		-.080	-.092	-.051				18
19	-.118	-.187	-.188	-.175	-.170	-.121	-.114	-.067				19
20	-.159	-.192	-.192	-.199	-.154	-.128	-.119	-.089				20
21	-.173	-.186	-.192	-.190	-.166	-.132	-.119	-.093				21
22	-.176	-.117	-.169	-.203	-.163	-.131	-.131	-.091				22
					α= 0		δ= 20.0					
1	.842	.697	.814	.727		.770	.667	.846				1
2	.078	.099	.133	.145		.146	.154	.112				2
3	.041	.053	.102	.109		.109	.125	.014				3
4	.037	.022	.049	.065		.080	.072	.010				4
5	.028	-.001	.018	.042		.061	.054	.018				5
6	.011	-.003	.005	.026		.043	.046	.010				6
7	.007	-.006	-.009	.011		.029	.026	.013				7
8	.003	-.014	-.025	-.007		.007	.017	.000				8
9	-.004	-.030	-.038	-.025		-.007	.011	.002				9
10	-.009	-.028		-.027		-.013	.002	-.017				10
11	-.011	-.020.		-.030		-.015						11
12	-.014	-.026		-.029		-.014	-.004	-.023				12
13	-.011	-.021	-.030	-.031		-.020	-.009	.013				13
14	-.011	-.019	-.029	-.034		-.016	-.013	.025				14
15	-.020	-.040	-.044	-.043		-.040	-.026	-.021				15
16	.003	-.017	-.018	.024		-.048	-.004	.097				16
17		-.022	-.001	.045								17
18		-.165	-.161	-.196		-.077	-.091	-.055				18
19	-.201	-.259	-.259	-.233	-.190	-.120	-.114	-.067				19
20	-.240	-.265	-.263	-.276	-.181	-.127	-.119	-.089				20
21	-.216	-.261	-.263	-.269	-.203	-.128	-.120	-.097				21
22	-.251	-.172	-.187	-.275	-.180	-.127	-.128	-.092				22
					α= 0		δ= 30.0					
1	.840	.694	.816	.727		.770	.667	.844				1
2	.077	.098	.133	.146		.152	.156	.115				2
3	.040	.052	.101	.108		.116	.128	.017				3
4	.037	.023	.052	.066		.086	.072	.011				4
5	.027	-.002	.019	.042		.064	.056	.018				5
6	.011	-.004	.004	.025		.046	.043	.011				6
7	.005	-.008	-.008	.011		.031	.029	.013				7
8	.003	-.017	-.025	-.008		.007	.020	.000				8
9	-.004	-.030	-.039	-.024		-.007	.012	.003				9
10	-.008	-.028		-.025		-.013	.003	-.016				10
11	-.012	-.020		-.032		-.015						11
12	-.012	-.023		-.031		-.015	-.004	-.021				12
13	-.010	-.019	-.030	-.032		-.019	-.008	.018				13
14	-.011	-.017	-.027	-.033		-.018	-.013	.027				14
15	-.019	-.038	-.044	-.035		-.040	-.024	-.019				15
16	.007	-.015	.011	.120		-.041	.001	.102				16
17		-.018	.025	.139								17
18		-.209	-.208	-.224		-.076	-.088	-.050				18
19	-.228	-.282	-.260	-.247	-.193	-.123	-.116	-.065				19
20	-.251	-.280	-.258	-.270	-.185	-.126	-.119	-.084				20
21	-.238	-.270	-.257	-.270	-.200	-.127	-.120	-.095				21
22	-.269	-.210	-.219	-.272	-.175	-.123	-.127	-.087				22

Table 3 Continued

Pressure coefficients on swept wing

Configuration 3 M=2.01 R=3.6 x 10^6

Orif	Station 1	2	3	4	24	5	6	7	8	9	10	Orif
					α= 3		δ= 0.0					
1	.868	.666	.704	.686		.791	.591	.871				1
2	.035	.018	.037	.035		.038	.046	.041				2
3	-.005	-.012	.017	.023		.021	.038	.018				3
4	-.007	-.040	-.016	-.013		.002	.002	-.003				4
5	-.015	-.049	-.041	-.026		-.014	-.013	-.003				5
6	-.029	-.051	-.055	-.038		-.026	-.027	-.018				6
7	-.034	-.054	-.064	-.048		-.035	-.041	-.013				7
8	-.030	-.058	-.079	-.065		-.051	-.047	-.023				8
9	-.046	-.067	-.089	-.076		-.062	-.050	-.021				9
10	-.046	-.067		-.075		-.059	-.059	-.036				10
11	-.052	-.060		-.085		-.063						11
12	-.052	-.061		-.081		-.065	-.059	-.051				12
13	-.051	-.056	-.075	-.084		-.068	-.060	-.041				13
14	-.050	-.058	-.073	-.084		-.067	-.064	-.029				14
15	-.056	-.073	-.085	-.090		-.088	-.070	-.079				15
16	-.054	-.056	-.069	-.064		-.096	-.053	.055				16
17		-.039	-.050	-.047								17
18		-.041	-.049	-.097		-.118	-.126	-.108				18
19	-.100	-.137	-.144	-.153	-.158	-.153	-.145	-.110				19
20	-.101	-.139	-.146	-.164	-.162	-.157	-.149	-.117				20
21	-.136	-.137	-.146	-.162	-.185	-.159	-.152	-.120				21
22	-.114	-.114	-.141	-.146	-.156	-.157	-.156	-.119				22
					α= 6		δ= -30.0					
1	.894	.609	.814	.612		.811	.480	.898				1
2	-.003	-.044	-.036	-.036		-.041	-.032	.000				2
3	-.045	-.064	-.044	-.039		-.051	-.034	-.014				3
4	-.043	-.094	-.075	-.071		-.070	-.071	-.048				4
5	-.053	-.099	-.092	-.081		-.074	-.076	-.047				5
6	-.063	-.092	-.103	-.091		-.084	-.084	-.057				6
7	-.067	-.096	-.111	-.101		-.095	-.095	-.059				7
8	-.066	-.099	-.125	-.113		-.106	-.108	-.067				8
9	-.076	-.107	-.137	-.126		-.114	-.111	-.070				9
10	-.080	-.102		-.126		-.116	-.115	-.093				10
11	-.085	-.096		-.132		-.116						11
12	-.084	-.097		-.128		-.115	-.115	-.159				12
13	-.086	-.092	-.120	-.129		-.121	-.115	-.159				13
14	-.084	-.092	-.070	.016		-.118	-.117	-.125				14
15	-.089	-.028	.065	.080		-.134	-.123	-.154				15
16	-.054	.085	.071	.036		-.129	-.105	-.010				16
17		.055	.059	.131								17
18		.083	.066	.024		-.155	-.167	-.183				18
19	.122	.298	.216	.038	-.233	-.176	-.190	-.191				19
20	.165	.370	.355	.113	-.233	-.176	-.195	-.185				20
21	.188	.360	.392	.155	-.237	-.172	-.195	-.192				21
22	.159	.320	.381	.101	-.190	-.117	-.188	-.194				22
					α= 6		δ= -20.0					
1	.898	.614	.815	.614		.813	.479	.896				1
2	-.004	-.043	-.034	-.037		-.038	-.033	.000				2
3	-.046	-.064	-.044	-.038		-.049	-.033	-.013				3
4	-.045	-.095	-.072	-.072		-.067	-.068	-.045				4
5	-.055	-.100	-.091	-.081		-.072	-.075	-.045				5
6	-.063	-.092	-.102	-.091		-.084	-.082	-.055				6
7	-.067	-.096	-.111	-.099		-.091	-.094	-.059				7
8	-.066	-.097	-.124	-.115		-.104	-.109	-.068				8
9	-.079	-.104	-.136	-.126		-.112	-.113	-.070				9
10	-.082	-.104		-.125		-.114	-.116	-.093				10
11	-.084	-.096		-.130		-.115						11
12	-.084	-.099		-.129		-.114	-.115	-.157				12
13	-.088	-.092	-.122	-.128		-.117	-.115	-.154				13
14	-.084	-.091	-.114	-.133		-.115	-.118	-.119				14
15	-.090	-.106	-.118	-.124		-.134	-.124	-.154				15
16	-.063	.000	-.008	.003		-.137	-.104	-.011				16
17		.005	.003	.009								17
18		.031	.014	-.019		-.161	-.170	-.180				18
19	-.011	.122	.110	-.026	-.188	-.194	-.190	-.183				19
20	.018	.132	.129	-.022	-.163	-.200	-.194	-.186				20
21	.041	.124	.136	-.018	-.210	-.199	-.195	-.181				21
22	.018	.109	.132	-.039	-.185	-.191	-.189	-.189				22

Table 3 Continued

Pressure coefficients on swept wing

Configuration 3 M=2.01 R=3.6 x 10^6

Orif	Station 1	2	3	4	24	5	6	7	8	9	10	Orif
					α= 6		δ= -10.0					
1	.897	.614	.821	.614		.815	.482	.898				1
2	-.003	-.043	-.031	-.033		-.036	-.030	.001				2
3	-.045	-.064	-.041	-.038		-.045	-.033	-.014				3
4	-.044	-.094	-.070	-.069		-.064	-.067	-.047				4
5	-.053	-.097	-.089	-.078		-.071	-.073	-.045				5
6	-.064	-.093	-.101	-.089		-.081	-.080	-.055				6
7	-.065	-.095	-.108	-.098		-.089	-.094	-.059				7
8	-.064	-.097	-.122	-.111		-.103	-.104	-.067				8
9	-.077	-.107	-.134	-.124		-.111	-.110	-.070				9
10	-.082	-.102		-.122		-.115	-.115	-.093				10
11	-.082	-.095		-.127		-.116						11
12	-.083	-.097		-.126		-.115	-.112	-.156				12
13	-.085	-.091	-.118	-.128		-.118	-.113	-.149				13
14	-.084	-.091	-.112	-.131		-.115	-.115	-.121				14
15	-.089	-.105	-.123	-.137		-.132	-.123	-.148				15
16	-.071	-.056	-.072	-.072		-.140	-.104	-.010				16
17		-.038	-.048	-.041								17
18		-.022	-.043	-.101		-.161	-.168	-.175				18
19	-.083	-.051	-.066	-.141	-.159	-.192	-.188	-.185				19
20	-.074	-.052	-.066	-.141	-.166	-.195	-.191	-.178				20
21	-.066	-.057	-.063	-.133	-.193	-.199	-.192	-.177				21
22	-.084	-.055	-.061	-.128	-.178	-.194	-.187	-.185				22
					α= 6		δ= - 5.0					
1	.896	.613	.823	.615		.813	.483	.896				1
2	-.002	-.042	-.031	-.033		-.035	-.028	.004				2
3	-.046	-.064	-.041	-.035		-.045	-.030	-.013				3
4	-.045	-.094	-.071	-.068		-.061	-.066	-.042				4
5	-.055	-.101	-.089	-.078		-.067	-.070	-.044				5
6	-.064	-.092	-.100	-.088		-.079	-.076	-.052				6
7	-.067	-.094	-.108	-.097		-.090	-.092	-.056				7
8	-.065	-.098	-.123	-.109		-.100	-.102	-.066				8
9	-.078	-.109	-.133	-.122		-.108	-.106	-.068				9
10	-.080	-.104		-.121		-.112	-.113	-.087				10
11	-.088	-.097		-.126		-.111						11
12	-.085	-.099		-.124		-.111	-.111	-.147				12
13	-.086	-.093	-.118	-.126		-.115	-.111	-.143				13
14	-.084	-.091	-.113	-.128		-.113	-.113	-.116				14
15	-.090	-.107	-.121	-.137		-.129	-.119	-.140				15
16	-.073	-.064	-.081	-.078		-.135	-.100	-.006				16
17		-.041	-.056	-.048								17
18		-.050	-.063	-.125		-.156	-.166	-.165				18
19	-.100	-.115	-.128	-.168	-.168	-.190	-.184	-.173				19
20	-.093	-.115	-.131	-.179	-.186	-.195	-.189	-.175				20
21	-.118	-.118	-.128	-.166	-.238	-.196	-.189	-.172				21
22	-.102	-.104	-.122	-.149	-.184	-.191	-.183	-.179				22
					α= 6		δ= 0.0					
1	.894	.615	.809	.619		.810	.493	.895				1
2	.005	-.028	-.014	-.020		-.014	-.008	.012				2
3	-.035	-.052	-.029	-.027		-.026	-.013	-.003				3
4	-.035	-.079	-.060	-.060		-.047	-.043	-.029				4
5	-.044	-.086	-.081	-.066		-.053	-.051	-.032				5
6	-.057	-.084	-.090	-.078		-.064	-.063	-.042				6
7	-.057	-.086	-.098	-.084		-.075	-.074	-.041				7
8	-.059	-.089	-.113	-.096		-.086	-.082	-.051				8
9	-.070	-.097	-.120	-.111		-.091	-.086	-.051				9
10	-.073	-.094		-.108		-.094	-.091	-.071				10
11	-.076	-.087		-.114		-.095						11
12	-.075	-.088		-.113		-.093	-.091	-.110				12
13	-.077	-.084	-.107	-.115		-.098	-.093	-.083				13
14	-.074	-.083	-.103	-.116		-.097	-.096	-.090				14
15	-.080	-.098	-.113	-.122		-.116	-.101	-.118				15
16	-.068	-.068	-.080	-.076		-.119	-.083	.007				16
17		-.041	-.058	-.049								17
18		-.070	-.081	-.130		-.143	-.150	-.143				18
19	-.111	-.160	-.168	-.176	-.180	-.174	-.167	-.153				19
20	-.131	-.162	-.170	-.196	-.190	-.179	-.170	-.155				20
21	-.162	-.159	-.169	-.203	-.226	-.179	-.172	-.153				21
22	-.137	-.115	-.155	-.165	-.178	-.178	-.172	-.158				22

Table 3 · Continued

Pressure coefficients on swept wing

Configuration 3 M=2.01 R=3.6 x 10^6

Orif	Station 1	2	3	4	24	5	6	7	8	9	10	Orif
					α= 6		δ= 5.0					
1	.899	.612	.720	.631		.810	.483	.884				1
2	-.007	-.044	-.030	-.034		-.034	-.028	-.001				2
3	-.046	-.067	-.046	-.039		-.044	-.032	-.013				3
4	-.044	-.095	-.074	-.069		-.063	-.062	-.043				4
5	-.055	-.102	-.092	-.078		-.070	-.068	-.050				5
6	-.066	-.097	-.102	-.092		-.079	-.079	-.056				6
7	-.068	-.099	-.108	-.099		-.090	-.093	-.059				7
8	-.068	-.100	-.122	-.109		-.101	-.097	-.068				8
9	-.080	-.111	-.134	-.122		-.110	-.102	-.071				9
10	-.084	-.107		-.119		-.110	-.107	-.093				10
11	-.088	-.098		-.124		-.110						11
12	-.087	-.101		-.125		-.109	-.106	-.147				12
13	-.086	-.096	-.117	-.127		-.111	-.111	-.147				13
14	-.085	-.093	-.114	-.126		-.113	-.115	-.115				14
15	-.092	-.109	-.124	-.134		-.131	-.115	-.146				15
16	-.078	-.086	-.093	-.082		-.129	-.097	-.014				16
17		-.035	-.057	-.047								17
18		-.110	-.118	-.166		-.155	-.161	-.165				18
19	-.139	-.205	-.209	-.203	-.203	-.184	-.174	-.174				19
20	-.186	-.208	-.209	-.236	-.202	-.183	-.176	-.172				20
21	-.216	-.201	-.212	-.233	-.217	-.184	-.180	-.171				21
22	-.183	-.106	-.140	-.155	-.195	-.179	-.175	-.175				22
					α= 6		δ= 10.0					
1	.907	.599	.728	.600		.809	.455	.889				1
2	-.008	-.044	-.025	-.039		-.032	-.027	.003				2
3	-.046	-.066	-.047	-.046		-.040	-.034	-.009				3
4	-.046	-.093	-.078	-.071		-.058	-.053	-.039				4
5	-.056	-.101	-.096	-.071		-.063	-.064	-.046				5
6	-.066	-.097	-.103	-.089		-.075	-.076	-.054				6
7	-.066	-.095	-.109	-.094		-.089	-.085	-.058				7
8	-.071	-.098	-.118	-.102		-.098	-.082	-.066				8
9	-.080	-.108	-.130	-.114		-.104	-.090	-.071				9
10	-.085	-.104		-.108		-.102	-.092	-.093				10
11	-.087	-.094		-.114		-.103						11
12	-.087	-.094		-.118		-.100	-.091	-.160				12
13	-.084	-.092	-.111	-.123		-.098	-.099	-.157				13
14	-.083	-.088	-.114	-.117		-.106	-.105	-.123				14
15	-.087	-.104	-.119	-.123		-.121	-.098	-.159				15
16	-.084	-.081	-.077	-.077		-.114	-.085	-.022				16
17		-.022	-.055	-.039								17
18		-.135	-.144	-.175		-.146	-.146	-.163				18
19	-.172	-.227	-.228	-.218	-.200	-.169	-.153	-.180				19
20	-.208	-.231	-.233	-.243	-.191	-.165	-.158	-.178				20
21	-.226	-.227	-.233	-.225	-.199	-.164	-.158	-.171				21
22	-.215	-.141	-.158	-.182	-.192	-.160	-.153	-.168				22
					α= 6		δ= 20.0					
1	.909	.601	.729	.603		.809	.455	.888				1
2	-.013	-.058	-.043	-.049		-.050	-.045	-.009				2
3	-.059	-.078	-.056	-.052		-.057	-.046	-.021				3
4	-.058	-.108	-.086	-.083		-.079	-.076	-.054				4
5	-.064	-.112	-.103	-.092		-.083	-.083	-.058				5
6	-.072	-.106	-.114	-.101		-.093	-.093	-.066				6
7	-.076	-.107	-.120	-.111		-.104	-.104	-.068				7
8	-.074	-.108	-.133	-.123		-.115	-.110	-.080				8
9	-.088	-.116	-.146	-.134		-.120	-.114	-.084				9
10	-.089	-.114		-.131		-.122	-.119	-.105				10
11	-.093	-.104		-.138		-.123						11
12	-.093	-.106		-.138		-.121	-.118	-.178				12
13	-.093	-.101	-.126	-.137		-.123	-.122	-.169				13
14	-.092	-.100	-.122	-.137		-.124	-.126	-.143				14
15	-.096	-.114	-.131	-.141		-.141	-.125	-.167				15
16	-.091	-.084	-.086	-.030		-.136	-.106	-.025				16
17		.089	-.068	.067								17
18		-.191	-.201	-.217		-.166	-.170	-.179				18
19	-.222	-.262	-.251	-.233	-.219	-.193	-.182	-.195				19
20	-.247	-.269	-.236	-.231	-.200	-.193	-.189	-.189				20
21	-.238	-.252	-.233	-.227	-.218	-.195	-.191	-.183				21
22	-.253	-.185	-.201	-.209	-.203	-.168	-.181	-.186				22

Table 3 Continued

Pressure coefficients on swept wing

Configuration 3 M=2.01 R=3.6 x 10^6

Orif	Station 1	2	3	4	24	5	6	7	8	9	10	Orif
					α= 6		δ= 30.0					
1	.907	.598	.725	.603		.809	.459	.888				1
2	-.013	-.061	-.050	-.049		-.056	-.045	-.011				2
3	-.059	-.079	-.060	-.050		-.062	-.047	-.028				3
4	-.057	-.111	-.089	-.085		-.082	-.078	-.057				4
5	-.065	-.116	-.107	-.091		-.087	-.087	-.056				5
6	-.073	-.108	-.116	-.101		-.095	-.094	-.066				6
7	-.079	-.109	-.124	-.112		-.105	-.109	-.070				7
8	-.077	-.110	-.137	-.124		-.117	-.117	-.083				8
9	-.091	-.119	-.147	-.135		-.123	-.119	-.086				9
10	-.092	-.116		-.135		-.126	-.126	-.107				10
11	-.096	-.108		-.141		-.127						11
12	-.094	-.110		-.139		-.125	-.126	-.180				12
13	-.094	-.106	-.131	-.139		-.128	-.126	-.171				13
14	-.094	-.102	-.126	-.142		-.126	-.128	-.142				14
15	-.100	-.118	-.132	-.131		-.144	-.131	-.168				15
16	-.089	-.008	-.100	.002		-.134	-.107	-.022				16
17		.141	-.092	.170								17
18		-.233	-.239	-.238		-.169	-.174	-.192				18
19	-.245	-.281	-.254	-.240	-.224	-.200	-.194	-.200				19
20	-.267	-.279	-.242	-.235	-.212	-.203	-.199	-.197				20
21	-.257	-.265	-.242	-.242	-.229	-.205	-.200	-.193				21
22	-.273	-.224	-.227	-.233	-.210	-.135	-.173	-.198				22
					α= 9		δ= 0.0					
1	.904	.505	.706	.513		.801	.355	.919				1
2	-.036	-.093	-.087	-.093		-.093	-.093	-.055				2
3	-.076	-.114	-.095	-.095		-.098	-.091	-.057				3
4	-.075	-.132	-.121	-.116		-.114	-.113	-.089				4
5	-.080	-.142	-.134	-.122		-.117	-.118	-.084				5
6	-.089	-.135	-.141	-.130		-.125	-.126	-.095				6
7	-.091	-.128	-.145	-.136		-.132	-.135	-.103				7
8	-.097	-.130	-.155	-.144		-.144	-.140	-.121				8
9	-.108	-.138	-.166	-.154		-.150	-.141	-.140				9
10	-.108	-.132		-.153		-.149	-.145	-.160				10
11	-.112	-.123		-.158		-.149						11
12	-.109	-.124		-.158		-.148	-.147	-.207				12
13	-.110	-.118	-.156	-.159		-.150	-.148	-.227				13
14	-.109	-.118	-.145	-.159		-.149	-.152	-.185				14
15	-.113	-.130	-.151	-.163		-.162	-.153	-.214				15
16	-.103	-.082	-.093	-.101		-.163	-.136	-.064				16
17		-.029	-.062	-.049								17
18		-.102	-.121	-.163		-.187	-.191	-.225				18
19	-.119	-.168	-.179	-.184	-.202	-.211	-.207	-.223				19
20	-.149	-.168	-.174	-.212	-.219	-.213	-.211	-.222				20
21	-.171	-.161	-.175	-.221	-.256	-.215	-.211	-.215				21
22	-.143	-.093	-.118	-.166	-.194	-.201	-.189	-.212				22
					α= 12		δ= -30.0					
1	.931	.390	.523	.377		.760	.233	.971				1
2	-.078	-.158	-.160	-.167		-.176	-.183	-.167				2
3	-.114	-.175	-.165	-.166		-.174	-.172	-.170				3
4	-.118	-.192	-.182	-.181		-.183	-.184	-.186				4
5	-.122	-.200	-.190	-.188		-.187	-.190	-.218				5
6	-.129	-.203	-.194	-.192		-.190	-.191	-.242				6
7	-.131	-.187	-.200	-.196		-.194	-.197	-.265				7
8	-.133	-.177	-.210	-.202		-.203	-.203	-.272				8
9	-.142	-.181	-.217	-.211		-.209	-.205	-.281				9
10	-.144	-.173		-.208		-.210	-.208	-.275				10
11	-.145	-.166		-.211		-.209						11
12	-.144	-.166		-.211		-.206	-.207	-.288				12
13	-.146	-.161	-.218	-.106		-.208	-.207	-.273				13
14	-.146	-.160	-.068	-.069		-.205	-.210	-.290				14
15	-.150	-.025	-.038	-.062		-.208	-.211	-.304				15
16	-.134	-.001	-.042	-.094		-.199	-.194	-.093				16
17		.017	-.026	.002								17
18		.001	-.030	-.079		-.219	-.240	-.302				18
19	.040	.119	-.025	-.090	-.245	-.236	-.255	-.297				19
20	.073	.215	.074	-.060	-.253	-.239	-.259	-.290				20
21	.094	.236	.128	-.033	-.259	-.242	-.259	-.281				21
22	.068	.217	.201	-.074	-.242	-.151	-.167	-.268				22

Table 3 Continued

Pressure coefficients on swept wing

Configuration 3 M=2.01 R=3.6 x 10^6

Orif	Station 1	2	3	4	24	5	6	7	8	9	10	Orif
					α= 12		δ= -20.0					
1	.931	.391	.520	.376		.760	.236	.968				1
2	-.081	-.159	-.159	-.168		-.175	-.181	-.167				2
3	-.114	-.174	-.164	-.166		-.174	-.170	-.168				3
4	-.120	-.190	-.182	-.182		-.182	-.183	-.184				4
5	-.123	-.199	-.191	-.190		-.185	-.188	-.214				5
6	-.129	-.201	-.194	-.193		-.189	-.191	-.238				6
7	-.132	-.187	-.199	-.197		-.193	-.197	-.261				7
8	-.134	-.180	-.209	-.202		-.203	-.203	-.267				8
9	-.142	-.178	-.216	-.213		-.209	-.204	-.277				9
10	-.148	-.173		-.210		-.209	-.206	-.272				10
11	-.150	-.166		-.211		-.208						11
12	-.147	-.165		-.211		-.206	-.207	-.285				12
13	-.147	-.159	-.217	-.212		-.207	-.206	-.273				13
14	-.148	-.159	-.213	-.212		-.204	-.208	-.286				14
15	-.150	-.143	-.103	-.162		-.217	-.210	-.299				15
16	-.136	-.045	-.070	-.105		-.214	-.194	-.091				16
17		-.004	-.051	-.022								17
18		-.046	-.070	-.142		-.233	-.240	-.298				18
19	-.070	.001	-.063	-.142	-.213	-.257	-.254	-.294				19
20	-.059	.016	-.045	-.134	-.233	-.260	-.258	-.289				20
21	-.043	.016	-.030	-.134	-.270	-.262	-.258	-.279				21
22	-.053	.013	-.018	-.133	-.245	-.196	-.187	-.268				22
					α= 12		δ= -10.0					
1	.930	.393	.520	.376		.758	.236	.972				1
2	-.076	-.157	-.160	-.168		-.172	-.180	-.165				2
3	-.112	-.172	-.165	-.166		-.171	-.170	-.166				3
4	-.115	-.189	-.181	-.181		-.181	-.181	-.178				4
5	-.119	-.197	-.191	-.189		-.185	-.186	-.210				5
6	-.127	-.200	-.195	-.192		-.190	-.189	-.231				6
7	-.130	-.186	-.199	-.197		-.194	-.195	-.251				7
8	-.134	-.177	-.210	-.204		-.201	-.201	-.255				8
9	-.140	-.177	-.217	-.212		-.207	-.201	-.264				9
10	-.145	-.171		-.208		-.208	-.203	-.264				10
11	-.145	-.165		-.211		-.206						11
12	-.145	-.164		-.212		-.205	-.206	-.276				12
13	-.145	-.158	-.217	-.211		-.205	-.207	-.267				13
14	-.146	-.156	-.213	-.212		-.202	-.208	-.277				14
15	-.146	-.166	-.206	-.214		-.213	-.210	-.289				15
16	-.139	-.089	-.125	-.137		-.212	-.192	-.090				16
17		-.017	-.072	-.043								17
18		-.106	-.136	-.194		-.229	-.240	-.287				18
19	-.121	-.132	-.168	-.207	-.198	-.252	-.253	-.285				19
20	-.112	-.131	-.165	-.242	-.251	-.257	-.256	-.282				20
21	-.140	-.135	-.159	-.235	-.293	-.260	-.255	-.270				21
22	-.106	-.109	-.119	-.183	-.237	-.206	-.188	-.259				22
					α= 12		δ= - 5.0					
1	.927	.393	.522	.380		.760	.242	.970				1
2	-.077	-.156	-.157	-.165		-.170	-.171	-.158				2
3	-.113	-.171	-.164	-.164		-.168	-.165	-.157				3
4	-.118	-.188	-.179	-.177		-.176	-.175	-.169				4
5	-.121	-.197	-.189	-.183		-.180	-.179	-.195				5
6	-.127	-.199	-.191	-.191		-.183	-.184	-.219				6
7	-.129	-.182	-.197	-.194		-.191	-.189	-.233				7
8	-.133	-.175	-.206	-.196		-.196	-.191	-.239				8
9	-.143	-.177	-.214	-.206		-.202	-.193	-.248				9
10	-.144	-.171		-.202		-.200	-.196	-.249				10
11	-.145	-.163		-.207		-.199						11
12	-.144	-.164		-.208		-.196	-.197	-.266				12
13	-.145	-.158	-.213	-.208		-.198	-.198	-.253				13
14	-.145	-.156	-.207	-.207		-.196	-.201	-.261				14
15	-.148	-.166	-.204	-.209		-.207	-.201	-.277				15
16	-.139	-.098	-.133	-.138		-.205	-.186	-.087				16
17		-.014	-.074	-.044								17
18		-.133	-.164	-.207		-.227	-.231	-.277				18
19	-.146	-.192	-.216	-.224	-.218	-.246	-.245	-.277				19
20	-.166	-.192	-.214	-.267	-.258	-.247	-.247	-.273				20
21	-.192	-.191	-.212	-.281	-.294	-.250	-.248	-.262				21
22	-.162	-.108	-.122	-.187	-.206	-.203	-.186	-.252				22

Table 3 Continued

Pressure coefficients on swept wing

Configuration 3 M= 2.01 R=3.6 x 10^6

Orif	Station 1	2	3	4	24	5	6	7	8	9	10	Orif
					α= 12		δ= 0.0					
1	.931	.392	.524	.380		.760	.240	.970				1
2	-.073	-.149	-.146	-.158		-.159	-.166	-.145				2
3	-.110	-.166	-.154	-.158		-.157	-.158	-.143				3
4	-.114	-.179	-.171	-.171		-.167	-.168	-.159				4
5	-.117	-.189	-.181	-.175		-.171	-.174	-.181				5
6	-.124	-.191	-.185	-.181		-.175	-.177	-.200				6
7	-.126	-.175	-.190	-.186		-.182	-.185	-.209				7
8	-.129	-.171	-.198	-.189		-.190	-.188	-.218				8
9	-.140	-.173	-.206	-.200		-.196	-.190	-.232				9
10	-.141	-.168		-.193		-.195	-.191	-.237				10
11	-.142	-.161		-.196		-.194						11
12	-.142	-.158		-.198		-.191	-.191	-.258				12
13	-.142	-.154	-.204	-.200		-.195	-.195	-.243				13
14	-.143	-.153	-.198	-.198		-.193	-.195	-.248				14
15	-.142	-.164	-.197	-.202		-.205	-.193	-.273				15
16	-.135	-.101	-.131	-.135		-.202	-.180	-.090				16
17		-.010	-.075	-.044								17
18		-.140	-.167	-.207		-.222	-.226	-.271				18
19	-.153	-.206	-.225	-.223	-.227	-.242	-.239	-.267				19
20	-.185	-.207	-.218	-.266	-.256	-.245	-.242	-.263				20
21	-.206	-.203	-.218	-.280	-.289	-.246	-.242	-.253				21
22	-.178	-.106	-.128	-.168	-.192	-.205	-.190	-.245				22
					α= 12		δ= 5.0					
1	.927	.370	.431	.365		.754	.223	.965				1
2	-.088	-.163	-.160	-.171		-.171	-.176	-.160				2
3	-.119	-.179	-.169	-.174		-.172	-.169	-.256				3
4	-.126	-.194	-.184	-.182		-.180	-.176	-.171				4
5	-.129	-.203	-.199	-.186		-.182	-.182	-.204				5
6	-.134	-.207	-.200	-.192		-.188	-.189	-.219				6
7	-.140	-.193	-.201	-.198		-.194	-.194	-.227				7
8	-.145	-.186	-.211	-.200		-.199	-.192	-.228				8
9	-.149	-.185	-.217	-.209		-.205	-.196	-.234				9
10	-.154	-.181		-.206		-.205	-.196	-.237				10
11	-.157	-.172		-.207		-.204						11
12	-.157	-.171		-.209		-.201	-.198	-.253				12
13	-.156	-.167	-.217	-.211		-.202	-.201	-.232				13
14	-.155	-.165	-.215	-.210		-.202	-.203	-.239				14
15	-.158	-.174	-.217	-.211		-.211	-.198	-.249				15
16	-.153	-.115	-.172	-.144		-.204	-.184	-.091				16
17		.013	-.024	-.035								17
18		-.174	-.199	-.230		-.227	-.231	-.249				18
19	-.198	-.247	-.259	-.250	-.248	-.244	-.243	-.255				19
20	-.227	-.251	-.260	-.274	-.256	-.247	-.242	-.253				20
21	-.261	-.246	-.246	-.233	-.267	-.248	-.240	-.245				21
22	-.210	-.144	-.179	-.186	-.240	-.192	-.188	-.241				22
					α= 12		δ= 10.0					
1	.935	.378	.459	.368		.755	.229	.978				1
2	-.083	-.157	-.155	-.165		-.165	-.171	-.157				2
3	-.117	-.172	-.164	-.167		-.166	-.165	-.156				3
4	-.121	-.189	-.180	-.178		-.174	-.174	-.169				4
5	-.126	-.199	-.192	-.182		-.179	-.178	-.200				5
6	-.134	-.201	-.195	-.191		-.184	-.185	-.212				6
7	-.137	-.188	-.198	-.194		-.191	-.189	-.220				7
8	-.141	-.180	-.207	-.197		-.198	-.189	-.222				8
9	-.147	-.183	-.216	-.205		-.203	-.193	-.226				9
10	-.149	-.174		-.202		-.201	-.195	-.231				10
11	-.151	-.168		-.205		-.201						11
12	-.151	-.166		-.206		-.197	-.195	-.257				12
13	-.151	-.163	-.209	-.209		-.199	-.199	-.230				13
14	-.149	-.161	-.210	-.206		-.199	-.202	-.240				14
15	-.152	-.172	-.211	-.208		-.209	-.198	-.247				15
16	-.149	-.112	-.165	-.138		-.203	-.183	-.085				16
17		.023	-.004	-.008								17
18		-.198	-.219	-.248		-.226	-.229	-.253				18
19	-.234	-.276	-.282	-.235	-.237	-.247	-.241	-.258				19
20	-.267	-.284	-.251	-.225	-.244	-.248	-.245	-.256				20
21	-.276	-.276	-.237	-.215	-.271	-.250	-.245	-.248				21
22	-.272	-.181	-.207	-.207	-.239	-.177	-.188	-.242				22

Table 3 Concluded

Pressure coefficients on swept wing

Configuration 3 M=2.01 R=3.6 x 10^6

Orif	Station 1	2	3	4	24	5	6	7	8	9	10	Orif
					α= 12		δ= 20.0					
1	.934	.379	.459	.369		.756	.227	.981				1
2	-.085	-.165	-.164	-.172		-.176	-.182	-.169				2
3	-.119	-.180	-.172	-.172		-.176	-.175	-.170				3
4	-.123	-.198	-.190	-.185		-.184	-.183	-.183				4
5	-.128	-.203	-.195	-.190		-.187	-.189	-.214				5
6	-.133	-.210	-.199	-.198		-.192	-.194	-.231				6
7	-.138	-.196	-.204	-.199		-.198	-.199	-.244				7
8	-.140	-.186	-.212	-.203		-.205	-.200	-.249				8
9	-.151	-.186	-.219	-.213		-.211	-.205	-.253				9
10	-.151	-.180		-.209		-.209	-.205	-.254				10
11	-.153	-.172		-.213		-.209						11
12	-.153	-.172		-.213		-.206	-.205	-.273				12
13	-.151	-.167	-.219	-.215		-.207	-.208	-.255				13
14	-.151	-.166	-.217	-.215		-.205	-.210	-.264				14
15	-.154	-.176	-.214	-.205		-.218	-.206	-.269				15
16	-.145	-.082	-.183	-.113		-.207	-.192	-.088				16
17		.055	.233	.223								17
18		-.230	-.248	-.251		-.233	-.239	-.274				18
19	-.258	-.293	-.263	-.235	-.232	-.255	-.251	-.276				19
20	-.282	-.284	-.244	-.225	-.252	-.258	-.252	-.271				20
21	-.276	-.273	-.238	-.225	-.263	-.258	-.254	-.265				21
22	-.282	-.213	-.223	-.225	-.249	-.169	-.166	-.255				22
					α= 12		δ= 30.0					
1	.934	.378	.462	.373		.755	.228	.976				1
2	-.085	-.166	-.168	-.176		-.179	-.188	-.172				2
3	-.120	-.180	-.173	-.174		-.177	-.176	-.173				3
4	-.125	-.199	-.189	-.188		-.186	-.189	-.186				4
5	-.127	-.205	-.198	-.195		-.191	-.192	-.218				5
6	-.135	-.210	-.202	-.199		-.195	-.198	-.238				6
7	-.138	-.195	-.207	-.204		-.199	-.202	-.255				7
8	-.141	-.185	-.216	-.208		-.209	-.205	-.259				8
9	-.148	-.185	-.222	-.218		-.214	-.209	-.267				9
10	-.151	-.179		-.214		-.215	-.210	-.265				10
11	-.153	-.172		-.216		-.214						11
12	-.152	-.172		-.217		-.211	-.210	-.282				12
13	-.150	-.168	-.223	-.218		-.212	-.211	-.262				13
14	-.152	-.165	-.220	-.218		-.210	-.213	-.274				14
15	-.155	-.172	-.199	-.162		-.220	-.209	-.277				15
16	-.143	-.064	-.185	-.093		-.207	-.190	-.092				16
17		-.041	-.029	.300								17
18		-.251	-.260	-.259		-.237	-.241	-.280				18
19	-.270	-.297	-.257	-.240	-.237	-.257	-.256	-.284				19
20	-.288	-.285	-.247	-.232	-.252	-.261	-.259	-.281				20
21	-.278	-.275	-.245	-.239	-.266	-.262	-.259	-.271				21
22	-.289	-.231	-.235	-.242	-.255	-.163	-.152	-.257				22
					α= 15		δ= 0.0					
1	.947	.290	.300	.239		.653	.118	.892				1
2	-.110	-.191	-.191	-.205		-.209	-.218	-.219				2
3	-.132	-.201	-.197	-.201		-.203	-.206	-.208				3
4	-.141	-.213	-.209	-.209		-.209	-.211	-.225				4
5	-.143	-.220	-.216	-.211		-.211	-.213	-.250				5
6	-.149	-.226	-.219	-.217		-.215	-.217	-.266				6
7	-.153	-.221	-.221	-.220		-.218	-.218	-.281				7
8	-.155	-.211	-.229	-.224		-.224	-.220	-.285				8
9	-.164	-.206	-.235	-.230		-.229	-.223	-.294				9
10	-.166	-.197		-.227		-.228	-.224	-.286				10
11	-.168	-.191		-.230		-.228						11
12	-.166	-.187		-.230		-.225	-.224	-.298				12
13	-.166	-.183	-.235	-.228		-.225	-.226	-.286				13
14	-.166	-.181	-.232	-.226		-.222	-.227	-.296				14
15	-.168	-.186	-.226	-.223		-.231	-.226	-.307				15
16	-.160	-.121	-.170	-.168		-.228	-.213	-.093				16
17		.022	-.063	-.022								17
18		-.163	-.195	-.220		-.245	-.252	-.303				18
19	-.174	-.215	-.238	-.233	-.242	-.265	-.267	-.299				19
20	-.192	-.217	-.232	-.261	-.272	-.265	-.268	-.296				20
21	-.221	-.208	-.217	-.254	-.293	-.267	-.268	-.286				21
22	-.189	-.122	-.157	-.181	-.216	-.197	-.191	-.274				22

Table 4

Pressure coefficients on swept wing

Configuration 5 M=2.01 R=3.6 x 10^6

Orif	Station 1	2	3	4	24	5	6	7	8	9	10	Orif
					α=-15		δ= 0.0					
1	.650	.728	.748	.636		.202	.616	.238				1
2	.400	.542	.571	.602		.620	.642	.536				2
3	.377	.429	.489	.485		.539	.561	.381				3
4	.351	.372	.423	.459		.492	.501	.283				4
5	.327	.346	.385	.417		.452	.471	.212				5
6	.312	.319	.356	.397		.423	.438	.172				6
7	.302	.307	.338	.361		.391	.389	.142				7
8	.290	.285	.295	.328		.341	.375	.120				8
9	.283	.257	.271	.295		.332	.362	.103				9
10	.278	.265		.299		.320	.349	.081				10
11	.283	.265		.290		.317						11
12	.280	.264		.301		.322	.342	.031				12
13	.259	.270	.286	.297		.312	.334	.044				13
14	.267	.262	.273	.289		.311	.326	-.060				14
15	.252	.226	.237	.255		.260	.269	-.107				15
16	.186	.038	.093	.039		.198	.278	.063				16
17	.003	.068	-.034	-.017								17
18	.176	.185	.258	.071		.190	.169	-.049				18
19	.105	.070	.109	.099	.112	.125	.144	-.074				19
20	.168	.040	.080	.100	.112	.114	.135	-.079				20
21	.099	.026	.089	.066	.030	.102	.127	-.084				21
22	.083	.045	.077	.100	.086	.111	.112	-.071				22
					α=-12		δ= -30.0					
1	.719	.725	.794	.698		.357	.692	.427				1
2	.341	.463	.505	.537		.536	.563	.466				2
3	.310	.338	.398	.394		.454	.460	.298				3
4	.277	.296	.341	.379		.415	.424	.216				4
5	.266	.277	.308	.339		.378	.394	.157				5
6	.247	.252	.283	.317		.348	.363	.129				6
7	.238	.238	.268	.291		.321	.323	.096				7
8	.217	.217	.235	.264		.276	.304	.080				8
9	.219	.186	.204	.237		.265	.295	.063				9
10	.212	.197		.233		.257	.279	.040				10
11	.208	.203		.225		.245						11
12	.215	.204		.230		.251	.271	-.006				12
13	.192	.205	.217	.222		.240	.261	.012				13
14	.205	.204	.208	.216		.243	.250	-.077				14
15	.193	.165	.187	.200		.199	.218	-.116				15
16	.130	.223	.169	.301		.186	.247	.049				16
17	.288	1.055	.018	-.255								17
18	.012	.150	.044	.157		.134	.117	-.080				18
19	.132	.230	.242	.527	.329	.145	.093	-.098				19
20	.278	.404	.492	.677	.283	.218	.080	-.103				20
21	.496	.492	.690	.420	-.143	.223	.074	-.108				21
22	.619	.529	.636	.414	-.204	.177	.080	-.092				22
					α=-12		δ= -20.0					
1	.717	.731	.789	.697		.360	.692	.424				1
2	.338	.464	.503	.537		.540	.564	.467				2
3	.316	.342	.394	.394		.457	.453	.300				3
4	.281	.296	.342	.378		.411	.419	.217				4
5	.267	.278	.310	.339		.376	.394	.156				5
6	.251	.253	.283	.319		.346	.360	.128				6
7	.242	.240	.269	.290		.317	.323	.098				7
8	.217	.217	.231	.268		.274	.302	.079				8
9	.226	.191	.204	.239		.261	.290	.063				9
10	.219	.202		.233		.252	.278	.042				10
11	.213	.201		.221		.247						11
12	.216	.203		.231		.250	.268	-.005				12
13	.197	.209	.216	.223		.238	.258	.009				13
14	.204	.202	.207	.215		.242	.251	-.078				14
15	.192	.168	.178	.192		.195	.216	-.110				15
16	.130	.192	.110	.202		.166	.229	.045				16
17	.630	.204	-.084	-.204								17
18	.000	.100	.099	.180		.134	.117	-.075				18
19	.133	.145	.140	.234	.201	.074	.094	-.096				19
20	.302	.270	.281	.340	.191	.071	.086	-.099				20
21	.365	.380	.471	.259	-.060	.102	.076	-.107				21
22	.346	.390	.520	.231	-.131	.134	.060	-.094				22

Table 4 Continued

Pressure coefficients on swept wing

Configuration 5 M=2.01 R=3.6 x 10^6

Orif	Station 1	2	3	4	24	5	6	7	8	9	10	Orif
					α=-12		δ= -10.0					
1	.715	.726	.786	.695		.360	.693	.428				1
2	.334	.461	.502	.540		.538	.562	.470				2
3	.311	.343	.394	.395		.460	.457	.302				3
4	.275	.296	.338	.378		.416	.419	.219				4
5	.262	.273	.306	.340		.373	.392	.160				5
6	.247	.250	.283	.319		.348	.364	.129				6
7	.238	.241	.266	.291		.319	.323	.096				7
8	.212	.215	.233	.264		.278	.305	.082				8
9	.213	.191	.204	.232		.264	.291	.061				9
10	.214	.197		.237		.255	.281	.042				10
11	.203	.203		.223		.249						11
12	.213	.201		.232		.253	.273	-.006				12
13	.191	.206	.220	.226		.237	.263	.012				13
14	.202	.204	.207	.218		.243	.252	-.075				14
15	.189	.162	.177	.189		.199	.214	-.105				15
16	.125	.019	.054	.032		.145	.217	.047				16
17	-.067	-.030	-.071	-.068								17
18	.050	.044	.015	.044		.137	.118	-.067				18
19	.151	.111	.128	.120	.093	.078	.094	-.091				19
20	.204	.172	.206	.198	.166	.073	.084	-.097				20
21	.163	.188	.239	.138	.095	.063	.078	-.103				21
22	.153	.174	.232	.129	-.021	.056	.063	-.091				22
					α=-12		δ= - 5.0					
1	.713	.725	.786	.695		.358	.692	.420				1
2	.333	.459	.500	.533		.539	.561	.465				2
3	.307	.340	.395	.391		.454	.456	.301				3
4	.274	.294	.336	.376		.417	.420	.216				4
5	.259	.269	.305	.334		.376	.396	.157				5
6	.244	.247	.282	.315		.345	.363	.126				6
7	.234	.238	.263	.288		.320	.324	.095				7
8	.215	.215	.230	.262		.280	.304	.075				8
9	.213	.188	.203	.234		.267	.291	.062				9
10	.208	.192		.234		.256	.279	.040				10
11	.205	.198		.221		.249						11
12	.209	.197		.227		.254	.271	-.006				12
13	.189	.204	.215	.222		.242	.258	.011				13
14	.199	.198	.205	.214		.247	.252	-.074				14
15	.186	.161	.173	.191		.199	.211	-.126				15
16	.122	.002	.047	-.001		.146	.215	.044				16
17	-.088	-.055	-.065	-.049								17
18	.126	.082	.045	.054		.142	.118	-.075				18
19	.111	.104	.126	.129	.097	.078	.095	-.099				19
20	.161	.089	.119	.105	.104	.072	.085	-.104				20
21	.104	.093	.128	.073	.034	.063	.076	-.107				21
22	.097	.088	.118	.089	.022	.056	.065	-.097				22
					α=-12		δ= 0.0					
1	.715	.726	.786	.694		.361	.694	.427				1
2	.334	.460	.503	.539		.536	.561	.464				2
3	.307	.339	.395	.388		.453	.453	.297				3
4	.274	.294	.341	.381		.415	.418	.214				4
5	.263	.273	.309	.342		.379	.391	.157				5
6	.247	.250	.282	.318		.347	.362	.125				6
7	.237	.241	.266	.292		.313	.320	.090				7
8	.215	.219	.226	.261		.274	.301	.075				8
9	.218	.186	.206	.231		.262	.288	.059				9
10	.214	.197		.235		.254	.276	.034				10
11	.211	.198		.220		.244						11
12	.209	.202		.232		.249	.267	-.009				12
13	.190	.204	.217	.225		.234	.258	.007				13
14	.198	.198	.207	.217		.241	.251	-.075				14
15	.186	.165	.178	.191		.194	.207	-.114				15
16	.119	-.004	.046	-.003		.142	.210	.041				16
17	-.105	-.062	-.074	-.054								17
18	.139	.171	.212	.051		.136	.112	-.075				18
19	.084	.054	.067	.073	.066	.075	.086	-.103				19
20	.135	.031	.041	.059	.068	.067	.080	-.108				20
21	.068	.032	.051	.039	.011	.055	.074	-.110				21
22	.057	.044	.039	.069	.050	.059	.059	-.107				22

Table 4 Continued

Pressure coefficients on swept wing

Configuration 5 M=2.01 R=3.6 x 10^6

Orif	Station 1	2	3	4	24	5	6	7	8	9	10	Orif
					α=-12		δ= 5.0					
1	.713	.731	.786	.690		.356	.693	.422				1
2	.335	.463	.501	.538		.541	.562	.471				2
3	.308	.338	.393	.394		.455	.453	.298				3
4	.275	.297	.341	.378		.417	.420	.220				4
5	.260	.275	.312	.338		.376	.392	.160				5
6	.245	.249	.283	.317		.348	.363	.130				6
7	.235	.233	.264	.291		.318	.323	.097				7
8	.210	.219	.232	.264		.275	.307	.079				8
9	.217	.191	.204	.241		.264	.291	.063				9
10	.207	.198		.235		.254	.279	.039				10
11	.208	.201		.223		.251						11
12	.207	.201		.233		.249	.271	-.008				12
13	.188	.204	.215	.223		.239	.262	.011				13
14	.197	.200	.205	.214		.241	.253	-.075				14
15	.186	.313	.299	.283		.199	.211	-.114				15
16	.135	.370	.341	.364		.145	.214	.051				16
17	.105	.199	.097	.034								17
18	.079	.105	.140	.008		.137	.118	-.072				18
19	.097	.041	.023	.055	.055	.086	.092	-.095				19
20	.133	.061	.023	.068	.069	.099	.084	-.099				20
21	.073	.091	.032	.046	.000	.089	.078	-.104				21
22	.059	.117	.028	.024	-.013	.076	.065	-.093				22
					α=-12		δ= 10.0					
1	.717	.728	.790	.694		.360	.698	.424				1
2	.340	.464	.504	.540		.537	.566	.475				2
3	.312	.341	.399	.393		.454	.461	.304				3
4	.279	.296	.340	.378		.413	.427	.223				4
5	.268	.277	.312	.338		.377	.400	.162				5
6	.248	.252	.285	.317		.351	.367	.135				6
7	.241	.238	.268	.292		.319	.327	.100				7
8	.215	.217	.235	.265		.289	.311	.087				8
9	.224	.190	.211	.231		.268	.292	.068				9
10	.218	.201		.237		.260	.282	.047				10
11	.208	.204		.226		.257						11
12	.215	.206		.231		.253	.274	-.001				12
13	.196	.212	.219	.226		.246	.262	.011				13
14	.203	.309	.405	.393		.259	.256	-.068				14
15	.231	.485	.492	.455		.244	.217	-.109				15
16	.371	.526	.521	.443		.205	.215	.055				16
17	.404	.370	.435	.382								17
18	.049	.061	.063	-.071		.194	.125	-.073				18
19	.050	-.037	-.052	-.022	.029	.143	.102	-.094				19
20	.052	-.031	-.059	-.017	.038	.123	.111	-.097				20
21	-.003	-.002	-.058	-.027	-.043	.105	.119	-.105				21
22	-.022	.026	-.065	-.063	-.048	.075	.098	-.095				22
					α=-12		δ= 20.0					
1	.719	.728	.786	.694		.357	.690	.415				1
2	.338	.463	.503	.537		.537	.562	.468				2
3	.312	.344	.395	.389		.460	.458	.294				3
4	.278	.298	.336	.379		.415	.421	.217				4
5	.266	.279	.310	.338		.377	.394	.157				5
6	.251	.255	.285	.316		.348	.360	.128				6
7	.242	.243	.268	.289		.318	.323	.096				7
8	.212	.217	.230	.262		.274	.302	.077				8
9	.222	.193	.209	.230		.265	.289	.062				9
10	.218	.200		.234		.254	.278	.044				10
11	.214	.203		.224		.249						11
12	.211	.205		.293		.277	.267	-.005				12
13	.194	.210	.461	.504		.359	.281	.015				13
14	.206	.527	.541	.541		.381	.312	-.075				14
15	.334	.507	.541	.509		.342	.276	-.116				15
16	.436	.635	.579	.440		.318	.267	.052				16
17	1.929	1.334	1.152	1.050								17
18	-.106	-.096	-.114	-.197		.243	.203	-.061				18
19	-.089	-.173	-.191	-.165	.002	.167	.178	-.077				19
20	-.109	-.171	-.195	-.179	-.011	.127	.166	-.073				20
21	-.132	-.151	-.199	-.174	-.168	.096	.148	-.071				21
22	-.137	-.100	-.188	-.201	-.128	.058	.121	-.059				22

Table 4 Continued

Pressure coefficients on swept wing

Configuration 5 M=2.01 R=3.6 x 10^6

Orif	Station 1	2	3	4	24	5	6	7	8	9	10	Orif
					α=-12		δ= 30.0					
1	.715	.729	.787	.696		.355	.690	.422				1
2	.338	.462	.496	.538		.538	.560	.472				2
3	.313	.342	.396	.394		.459	.458	.304				3
4	.275	.293	.337	.377		.413	.420	.222				4
5	.264	.277	.310	.335		.374	.394	.161				5
6	.247	.251	.286	.318		.350	.363	.131				6
7	.238	.241	.265	.291		.323	.324	.097				7
8	.218	.216	.231	.262		.277	.308	.082				8
9	.216	.191	.208	.238		.264	.291	.063				9
10	.218	.199		.235		.254	.272	.044				10
11	.206	.202		.224		.250						11
12	.212	.204		.235		.286	.281	-.003				12
13	.193	.208	.240	.473		.419	.334	.015				13
14	.199	.231	.526	.564		.455	.378	-.074				14
15	.193	.534	.567	.604		.379	.323	-.100				15
16	.205	.469	.531	.541		.346	.305	.068				16
17	1.620	1.129	1.146	1.061								17
18	-.074	-.198	-.235	-.245		.257	.226	-.030				18
19	-.181	-.238	-.260	-.229	-.124	.175	.193	-.055				19
20	-.183	-.232	-.256	-.248	-.029	.130	.176	-.056				20
21	-.216	-.220	-.257	-.248	-.218	.088	.159	-.066				21
22	-.201	-.180	-.248	-.249	-.193	.044	.129	-.050				22
					α= - 9		δ= 0.0					
1	.774	.726	.799	.743		.536	.744	.674				1
2	.257	.361	.426	.452		.440	.480	.389				2
3	.233	.248	.291	.304		.367	.349	.193				3
4	.205	.223	.267	.294		.326	.340	.152				4
5	.195	.196	.226	.259		.294	.316	.105				5
6	.177	.183	.205	.238		.268	.290	.080				6
7	.168	.169	.192	.216		.246	.258	.056				7
8	.147	.153	.163	.193		.210	.241	.034				8
9	.149	.129	.140	.170		.199	.225	.022				9
10	.140	.133		.170		.190	.214	.003				10
11	.149	.138		.153		.185						11
12	.141	.137		.166		.185	.207	-.032				12
13	.140	.144	.148	.161		.176	.199	-.027				13
14	.141	.142	.143	.151		.175	.188	-.081				14
15	.132	.112	.119	.130		.140	.162	-.147				15
16	.055	-.036	.004	-.031		.092	.153	.031				16
17	-.076	-.027	-.067	-.058								17
18	.082	.117	.161	-.004		.092	.071	-.094				18
19	.025	.000	.019	.015	.012	.033	.048	-.116				19
20	.074	-.017	-.005	.005	.012	.025	.037	-.120				20
21	.013	-.024	.002	-.013	-.040	.019	.032	-.116				21
22	.004	-.010	-.008	.019	-.002	.011	.020	-.114				22
					α= - 6		δ= -30.0					
1	.814	.709	.791	.772		.663	.752	.837				1
2	.185	.257	.325	.360		.361	.380	.296				2
3	.167	.177	.212	.226		.264	.238	.064				3
4	.144	.141	.179	.198		.232	.235	.074				4
5	.134	.121	.147	.169		.206	.220	.038				5
6	.117	.111	.128	.151		.180	.188	.028				6
7	.105	.100	.117	.136		.166	.164	.014				7
8	.089	.086	.094	.113		.131	.153	-.007				8
9	.084	.059	.071	.089		.118	.140	-.010				9
10	.081	.066		.095		.112	.129	-.032				10
11	.080	.070		.079		.102						11
12	.081	.071		.092		.108	.122	-.042				12
13	.079	.074	.080	.082		.096	.118	-.037				13
14	.083	.076	.069	.134		.104	.108	-.035				14
15	.069	.048	.176	.321		.078	.090	-.142				15
16	.032	.134	.315	.345		.098	.133	.020				16
17	.969	.902	1.239	.092								17
18	-.114	.054	.202	.204		.062	.005	-.097				18
19	.051	.076	.183	.357	.204	.074	-.027	-.128				19
20	.182	.218	.272	.372	.122	.093	-.032	-.118				20
21	.329	.521	.441	.166	-.152	.085	-.035	-.115				21
22	.435	.399	.418	.118	-.208	.048	-.032	-.107				22

Table 4 Continued

Pressure coefficients on swept wing

Configuration 5 M=2.01 R=3.6 x 10^6

Orif	Station 1	2	3	4	24	5	6	7	8	9	10	Orif
					α=− 6		δ= −20.0					
1	.814	.715	.789	.770		.662	.755	.836				1
2	.185	.260	.329	.362		.361	.382	.298				2
3	.164	.172	.211	.227		.265	.241	.067				3
4	.144	.142	.176	.199		.235	.234	.076				4
5	.135	.119	.146	.175		.204	.215	.041				5
6	.117	.115	.129	.159		.183	.198	.031				6
7	.105	.103	.117	.140		.161	.169	.012				7
8	.086	.087	.094	.116		.128	.151	.002				8
9	.085	.061	.074	.088		.120	.141	−.008				9
10	.078	.066		.093		.113	.130	−.028				10
11	.082	.071		.081		.105						11
12	.078	.074		.088		.109	.123	−.041				12
13	.084	.077	.080	.084		.097	.118	−.044				13
14	.080	.075	.073	.078		.104	.109	−.036				14
15	.070	.055	.053	.060		.070	.091	−.145				15
16	.000	.184	.105	.207		.056	.115	.020				16
17	1.277	.377	.243	.034								17
18	−.069	.032	.118	.178		.021	.005	−.100				18
19	.030	.063	.140	.141	.124	−.032	−.022	−.117				19
20	.145	.135	.164	.147	.082	−.032	−.023	−.121				20
21	.201	.190	.214	.069	−.076	−.009	−.028	−.122				21
22	.207	.187	.228	.050	−.159	.011	−.040	−.115				22
					α=− 6		δ= −10.0					
1	.816	.713	.790	.768		.665	.756	.838				1
2	.183	.258	.330	.363		.363	.384	.300				2
3	.165	.175	.214	.227		.264	.237	.071				3
4	.145	.144	.181	.202		.233	.239	.078				4
5	.134	.124	.150	.173		.207	.218	.044				5
6	.118	.115	.131	.155		.185	.197	.031				6
7	.107	.104	.120	.136		.167	.171	.018				7
8	.088	.091	.093	.109		.134	.157	.004				8
9	.090	.063	.075	.091		.121	.145	−.003				9
10	.087	.071		.095		.118	.133	−.025				10
11	.084	.077		.083		.104						11
12	.078	.075		.094		.113	.120	−.036				12
13	.086	.083	.081	.087		.097	.118	−.038				13
14	.082	.075	.074	.081		.106	.108	−.033				14
15	.071	.052	.053	.061		.073	.091	−.144				15
16	−.001	−.029	−.014	.034		.036	.083	.024				16
17	−.105	−.044	−.023	.019								17
18	−.049	−.012	−.004	.015		.027	.008	−.095				18
19	.028	.007	.014	−.002	−.006	−.027	−.017	−.123				19
20	.075	.053	.064	.052	.027	−.036	−.023	−.122				20
21	.059	.077	.097	.018	−.004	−.037	−.025	−.114				21
22	.052	.067	.091	.007	−.075	−.034	−.038	−.116				22
					α=− 6		δ= − 5.0					
1	.816	.713	.790	.769		.661	.754	.836				1
2	.189	.258	.325	.362		.359	.378	.298				2
3	.168	.177	.213	.227		.264	.235	.065				3
4	.147	.145	.178	.201		.229	.237	.075				4
5	.138	.122	.146	.175		.204	.218	.043				5
6	.120	.115	.133	.155		.182	.196	.028				6
7	.107	.105	.118	.141		.164	.170	.017				7
8	.092	.090	.097	.115		.131	.157	−.001				8
9	.090	.063	.078	.097		.123	.141	−.010				9
10	.083	.070		.097		.117	.126	−.031				10
11	.086	.075		.082		.105						11
12	.084	.075		.091		.113	.117	−.044				12
13	.089	.081	.082	.086		.099	.117	−.043				13
14	.083	.076	.073	.081		.104	.108	−.037				14
15	.071	.052	.056	.060		.072	.088	−.144				15
16	.000	−.050	−.032	−.023		.032	.079	.019				16
17	−.084	−.066	−.054	−.043								17
18	−.007	.011	.004	−.031		.024	.008	−.102				18
19	.006	−.013	−.008	−.025	−.034	−.025	−.023	−.128				19
20	.042	−.014	.000	−.011	−.006	−.037	−.023	−.123				20
21	−.006	−.015	.011	−.035	−.054	−.035	−.029	−.129				21
22	−.004	−.014	.004	−.021	−.071	−.044	−.041	−.116				22

Table 4 Continued

Pressure coefficients on swept wing

Configuration 5 M=2.01 R=3.6 x 10^6

Orif	Station 1	2	3	4	24	5	6	7	8	9	10	Orif
					α=-6		δ= 0.0					
1	.815	.713	.792	.769		.665	.752	.837				1
2	.183	.256	.324	.360		.361	.377	.300				2
3	.165	.175	.212	.221		.266	.237	.064				3
4	.142	.144	.174	.198		.232	.230	.073				4
5	.127	.120	.148	.171		.205	.214	.042				5
6	.114	.112	.131	.154		.185	.192	.029				6
7	.103	.104	.119	.139		.165	.170	.015				7
8	.083	.088	.095	.116		.132	.151	-.001				8
9	.090	.062	.075	.097		.120	.140	-.007				9
10	.082	.068		.091		.113	.126	-.028				10
11	.083	.073		.083		.099						11
12	.078	.075		.089		.109	.120	-.039				12
13	.084	.078	.081	.083		.094	.114	-.038				13
14	.083	.077	.073	.079		.101	.107	-.036				14
15	.067	.051	.056	.060		.071	.084	-.108				15
16	-.012	-.062	-.042	-.044		.026	.070	.016				16
17	-.097	-.075	-.075	-.067								17
18	.031	.057	.099	-.047		.021	.005	-.103				18
19	-.015	-.045	-.038	-.041	-.050	-.032	-.025	-.112				19
20	.014	-.062	-.058	-.052	-.044	-.046	-.028	-.110				20
21	-.045	-.060	-.054	-.068	-.087	-.045	-.031	-.111				21
22	-.039	-.054	-.060	-.038	-.061	-.045	-.041	-.116				22
					α=-6		δ= 5.0					
1	.815	.716	.792	.773		.664	.753	.830				1
2	.186	.261	.333	.369		.361	.380	.295				2
3	.165	.175	.217	.226		.267	.245	.062				3
4	.142	.144	.181	.200		.234	.236	.074				4
5	.132	.121	.147	.173		.208	.218	.039				5
6	.118	.113	.133	.157		.184	.196	.027				6
7	.107	.104	.120	.140		.164	.171	.013				7
8	.089	.088	.095	.117		.131	.154	-.003				8
9	.085	.066	.075	.088		.121	.146	-.011				9
10	.085	.071		.096		.115	.133	-.032				10
11	.080	.072		.080		.105						11
12	.082	.074		.093		.112	.122	-.045				12
13	.088	.077	.084	.088		.097	.117	-.038				13
14	.085	.075	.073	.080		.103	.112	-.034				14
15	.073	.196	.165	.128		.072	.087	-.141				15
16	.022	.269	.251	.265		.028	.074	.036				16
17	.060	.152	.112	.085								17
18	-.017	.014	.037	-.077		.024	.005	-.096				18
19	-.011	-.062	-.075	-.057	-.052	-.026	-.023	-.121				19
20	.007	-.053	-.085	-.055	-.051	-.035	-.030	-.116				20
21	-.043	-.031	-.084	-.068	-.093	-.028	-.030	-.109				21
22	-.029	-.018	-.079	-.076	-.099	-.017	-.043	-.105				22
					α=-6		δ= 10.0					
1	.816	.714	.795	.772		.666	.757	.837				1
2	.186	.261	.332	.359		.360	.385	.302				2
3	.167	.176	.216	.230		.263	.243	.069				3
4	.144	.146	.178	.199		.231	.239	.078				4
5	.137	.125	.150	.177		.204	.216	.042				5
6	.118	.118	.130	.158		.183	.197	.031				6
7	.108	.106	.118	.142		.165	.172	.016				7
8	.090	.090	.096	.119		.134	.157	.002				8
9	.087	.066	.075	.101		.123	.143	-.006				9
10	.085	.071		.097		.118	.133	-.025				10
11	.088	.075		.085		.109						11
12	.085	.077		.095		.114	.123	-.042				12
13	.087	.082	.081	.089		.107	.116	-.041				13
14	.083	.113	.226	.177		.106	.111	-.038				14
15	.074	.333	.328	.301		.072	.089	-.147				15
16	.228	.372	.355	.289		.032	.075	.032				16
17	.354	.274	.304	.271								17
18	-.054	-.032	-.023	-.139		.032	.009	-.104				18
19	-.054	-.118	-.135	-.115	-.063	-.008	-.018	-.132				19
20	-.063	-.124	-.146	-.125	-.073	.002	-.023	-.128				20
21	-.097	-.110	-.148	-.123	-.130	.011	-.025	-.122				21
22	-.091	-.097	-.145	-.136	-.125	-.008	-.034	-.116				22

Table 4 Continued

Pressure coefficients on swept wing

Configuration 5 M=2.01 R=3.6 x 10^6

Orif	Station 1	2	3	4	24	5	6	7	8	9	10	Orif
					α= - 6		δ= 20.0					
1	.811	.711	.789	.770		.663	.754	.833				1
2	.184	.254	.329	.365		.360	.382	.295				2
3	.165	.174	.211	.223		.266	.239	.064				3
4	.140	.140	.176	.202		.232	.236	.076				4
5	.128	.120	.149	.174		.203	.217	.040				5
6	.113	.112	.130	.155		.182	.196	.028				6
7	.102	.101	.118	.140		.161	.171	.016				7
8	.088	.088	.092	.117		.123	.153	.000				8
9	.084	.064	.075	.091		.121	.141	-.009				9
10	.079	.066		.089		.115	.130	-.032				10
11	.079	.070		.079		.104						11
12	.078	.071		.090		.110	.123	-.034				12
13	.082	.079	.208	.257		.102	.117	-.037				13
14	.077	.345	.351	.348		.128	.109	-.034				14
15	.085	.338	.343	.325		.130	.088	-.142				15
16	.237	.489	.400	.310		.109	.080	.039				16
17	1.584	1.265	1.013	.955								17
18	-.145	-.136	-.150	-.216		.088	.005	-.095				18
19	-.151	-.203	-.218	-.202	-.046	.073	-.023	-.121				19
20	-.160	-.208	-.227	-.213	-.089	.052	-.023	-.120				20
21	-.173	-.193	-.227	-.209	-.203	.031	-.016	-.115				21
22	-.182	-.149	-.227	-.226	-.177	-.006	.004	-.112				22
					α= - 6		δ= 28.0					
1	.812	.718	.794	.769		.665	.753	.827				1
2	.185	.262	.330	.365		.364	.385	.297				2
3	.166	.176	.214	.229		.269	.246	.069				3
4	.144	.144	.179	.204		.237	.238	.076				4
5	.134	.122	.151	.176		.208	.219	.042				5
6	.118	.115	.131	.160		.187	.196	.026				6
7	.103	.104	.117	.142		.165	.170	.015				7
8	.089	.090	.094	.118		.134	.154	-.002				8
9	.084	.063	.075	.095		.122	.141	-.011				9
10	.083	.071		.101		.115	.130	-.028				10
11	.081	.075		.086		.102						11
12	.081	.076		.094		.110	.124	-.042				12
13	.086	.083	.091	.134		.104	.117	-.039				13
14	.084	.101	.327	.360		.173	.111	-.035				14
15	.076	.348	.358	.386		.192	.088	-.143				15
16	.059	.357	.397	.428		.200	.101	.037				16
17	1.517	1.056	1.173	1.120								17
18	-.155	-.228	-.250	-.253		.144	.007	-.094				18
19	-.226	-.262	-.263	-.250	-.089	.097	-.014	-.122				19
20	-.221	-.257	-.270	-.266	-.075	.063	.026	-.117				20
21	-.251	-.249	-.266	-.263	-.250	.032	.056	-.119				21
22	-.240	-.208	-.260	-.247	-.222	-.011	.045	-.115				22
					α= - 6		δ= 30.0					
1	.819	.722	.801	.777		.673	.750	.825				1
2	.189	.266	.336	.371		.370	.379	.294				2
3	.170	.182	.224	.232		.276	.239	.062				3
4	.149	.151	.188	.209		.246	.235	.074				4
5	.138	.129	.155	.183		.212	.215	.039				5
6	.124	.119	.138	.162		.189	.194	.023				6
7	.113	.111	.125	.145		.169	.168	.014				7
8	.095	.096	.101	.124		.132	.150	-.004				8
9	.090	.070	.082	.101		.121	.139	-.011				9
10	.089	.077		.101		.113	.127	-.032				10
11	.087	.080		.091		.103						11
12	.087	.082		.097		.111	.120	-.043				12
13	.090	.086	.090	.102		.103	.116	-.035				13
14	.088	.091	.238	.332		.161	.110	-.035				14
15	.081	.323	.356	.409		.197	.086	-.142				15
16	.043	.307	.347	.430		.204	.104	.043				16
17	1.371	.983	.917	.956								17
18	-.130	-.241	-.251	-.251		.147	.003	-.091				18
19	-.238	-.269	-.260	-.252	-.114	.099	-.016	-.124				19
20	-.230	-.266	-.265	-.267	-.126	.062	.024	-.120				20
21	-.263	-.253	-.268	-.260	-.250	.031	.058	-.107				21
22	-.249	-.222	-.262	-.244	-.223	-.013	.043	-.109				22

Table 4 Continued

Pressure coefficients on swept wing

Configuration 5 M=2.01 R=3.6 x 10^6

Orif	Station 1	2	3	4	24	5	6	7	8	9	10	Orif
					α= -3		δ= 0.0					
1	.823	.697	.802	.763		.731	.716	.886				1
2	.113	.163	.215	.238		.244	.279	.218				2
3	.099	.104	.154	.171		.184	.185	.001				3
4	.078	.068	.102	.119		.140	.128	.010				4
5	.071	.047	.072	.094		.112	.118	.004				5
6	.050	.043	.054	.074		.098	.104	-.004				6
7	.037	.035	.045	.064		.083	.082	-.006				7
8	.035	.025	.023	.039		.054	.063	-.015				8
9	.032	.009	.009	.020		.041	.056	-.018				9
10	.028	.011		.020		.031	.042	-.037				10
11	.027	.014		.013		.028						11
12	.026	.016		.016		.027	.036	-.047				12
13	.029	.016	.016	.016		.023	.032	-.033				13
14	.026	.015	.011	.012		.029	.030	.047				14
15	.014	-.006	-.004	-.005		-.002	.009	-.084				15
16	-.056	-.072	-.070	-.048		-.034	.004	.079				16
17	-.084	-.051	-.060	-.057								17
18	-.020	-.037	.018	-.083		-.040	-.063	-.108				18
19	-.074	-.094	-.083	-.100	-.098	-.094	-.094	-.099				19
20	-.060	-.112	-.100	-.110	-.101	-.108	-.098	-.099				20
21	-.090	-.118	-.096	-.110	-.138	-.103	-.099	-.104				21
22	-.083	-.093	-.097	-.088	-.102	-.102	-.100	-.106				22
					α= 0		δ= -30.0					
1	.845	.686	.794	.739		.770	.661	.864				1
2	.073	.096	.124	.140		.143	.145	.099				2
3	.041	.053	.100	.109		.106	.117	.013				3
4	.040	.023	.050	.063		.078	.064	.004				4
5	.032	.000	.016	.040		.061	.049	.014				5
6	.011	-.002	.004	.025		.044	.037	.005				6
7	.006	-.006	-.009	.008		.029	.019	.010				7
8	.000	-.013	-.025	-.009		.001	.012	-.004				8
9	-.001	-.028	-.035	-.026		-.013	.006	-.002				9
10	-.009	-.028		-.026		-.017	-.004	-.019				10
11	-.011	-.024		-.032		-.023						11
12	-.010	-.021		-.028		-.021	-.011	-.026				12
13	-.015	-.020	-.026	-.032		-.026	-.013	.001				13
14	-.011	-.020	-.029	.155		-.026	-.019	.093				14
15	-.022	-.040	.153	.240		-.034	-.029	-.035				15
16	-.034	.080	.197	.191		-.011	-.002	.087				16
17	1.089	1.016	.961	1.219								17
18	.040	-.017	.098	.101		-.042	-.096	-.067				18
19	-.002	.005	.109	.221	-.120	-.027	-.120	-.081				19
20	.087	.082	.118	.198	.002	-.011	-.125	-.102				20
21	.240	.306	.233	.010	-.100	-.012	-.125	-.109				21
22	.252	.391	.376	.078	-.253	-.023	-.132	-.105				22
					α= 0		δ= -20.0					
1	.843	.688	.796	.743		.774	.664	.867				1
2	.078	.095	.132	.145		.147	.148	.102				2
3	.044	.053	.100	.111		.109	.121	.015				3
4	.039	.021	.052	.067		.081	.068	.008				4
5	.031	-.002	.020	.042		.064	.053	.016				5
6	.011	-.004	.004	.027		.046	.040	.011				6
7	.006	-.006	-.008	.012		.031	.024	.014				7
8	.000	-.015	-.025	-.008		.008	.014	.003				8
9	-.005	-.031	-.035	-.024		-.008	.008	.004				9
10	-.010	-.025		-.026		-.012	-.003	-.014				10
11	-.014	-.023		-.030		-.016						11
12	-.013	-.020		-.029		-.015	-.007	-.018				12
13	-.013	-.016	-.027	-.029		-.020	-.009	.004				13
14	-.013	-.017	-.028	-.032		-.020	-.014	.108				14
15	-.022	-.036	-.042	-.031		-.041	-.028	-.036				15
16	-.057	.025	.054	.149		-.046	-.003	.085				16
17	1.789	.686	.510	.521								17
18	-.201	-.063	.015	.124		-.079	-.093	-.065				18
19	-.055	-.011	.058	.094	.007	-.120	-.116	-.079				19
20	.065	.097	.109	.069	-.027	-.129	-.120	-.100				20
21	.087	.140	.140	-.014	-.100	-.110	-.122	-.110				21
22	.099	.128	.118	-.044	-.209	-.062	-.132	-.105				22

Table 4 Continued

Pressure coefficients on swept wing

Configuration 5 M=2.01 R=3.6 x 10^6

Orif	Station 1	2	3	4	24	5	6	7	8	9	10	Orif
					α= 0		δ= -10.0					
1	.846	.687	.793	.736		.769	.665	.867				1
2	.078	.094	.127	.135		.141	.148	.100				2
3	.045	.053	.097	.100		.099	.118	.014				3
4	.039	.022	.049	.059		.076	.067	.006				4
5	.031	.001	.014	.041		.056	.052	.017				5
6	.011	-.005	-.003	.021		.037	.038	.006				6
7	.006	-.009	-.010	.004		.026	.021	.014				7
8	.001	-.016	-.029	-.012		.004	.012	.002				8
9	-.004	-.032	-.040	-.028		-.010	.007	.001				9
10	-.010	-.030		-.027		-.014	-.002	-.017				10
11	-.012	-.027		-.034		-.017						11
12	-.013	-.025		-.033		-.016	-.008	-.019				12
13	-.015	-.022	-.030	-.032		-.022	-.012	.015				13
14	-.014	-.021	-.034	-.035		-.021	-.013	.133				14
15	-.022	-.040	-.049	-.047		-.046	-.032	-.031				15
16	-.081	-.112	-.103	-.049		-.067	-.035	.090				16
17	-.067	.003	.009	-.028								17
18	-.106	-.082	-.087	-.056		-.078	-.095	-.062				18
19	-.064	-.057	-.048	-.068	-.079	-.122	-.118	-.077				19
20	-.041	-.032	-.030	-.062	-.078	-.127	-.122	-.095				20
21	-.034	-.018	-.008	-.079	-.084	-.131	-.124	-.106				21
22	-.039	-.018	-.012	-.088	-.152	-.130	-.132	-.100				22
					α= 0		δ= - 5.0					
1	.842	.688	.793	.739		.767	.666	.870				1
2	.080	.096	.130	.140		.143	.149	.104				2
3	.042	.052	.100	.108		.109	.119	.013				3
4	.042	.021	.050	.059		.075	.067	.009				4
5	.029	.000	.018	.038		.057	.054	.017				5
6	.008	-.005	.001	.023		.035	.039	.007				6
7	.004	-.008	-.011	.004		.027	.026	.011				7
8	-.001	-.017	-.030	-.010		.006	.016	-.004				8
9	-.006	-.031	-.038	-.027		-.008	.009	.001				9
10	-.010	-.029		-.027		-.013	.001	-.021				10
11	-.013	-.025		-.033		-.018						11
12	-.013	-.025		-.032		-.015	-.005	-.019				12
13	-.014	-.019	-.029	-.031		-.022	-.011	.011				13
14	-.012	-.023	-.030	-.032		-.020	-.019	.127				14
15	-.022	-.036	-.047	-.046		-.044	-.030	-.030				15
16	-.079	-.094	-.088	-.031		-.064	-.032	.089				16
17	-.103	-.072	-.118	-.116								17
18	-.096	-.081	-.074	-.087		-.080	-.094	-.064				18
19	-.067	-.094	-.085	-.107	-.103	-.122	-.117	-.075				19
20	-.082	-.092	-.078	-.114	-.113	-.128	-.121	-.101				20
21	-.080	-.101	-.074	-.116	-.124	-.128	-.123	-.106				21
22	-.082	-.093	-.075	-.109	-.137	-.128	-.131	-.101				22
					α= 0		δ= 0.0					
1	.844	.686	.795	.736		.768	.665	.865				1
2	.076	.096	.129	.140		.142	.149	.102				2
3	.046	.053	.098	.105		.104	.122	.013				3
4	.041	.020	.051	.061		.077	.067	.007				4
5	.033	.000	.016	.038		.055	.053	.016				5
6	.013	-.005	.001	.023		.039	.042	.008				6
7	.007	-.007	-.011	.004		.024	.025	.011				7
8	.002	-.015	-.029	-.010		.005	.015	-.001				8
9	-.006	-.032	-.040	-.029		-.010	.010	.001				9
10	-.012	-.030		-.028		-.014	-.001	-.018				10
11	-.012	-.026		-.032		-.019						11
12	-.012	-.026		-.032		-.017	-.007	-.018				12
13	-.015	-.019	-.032	-.034		-.021	-.011	.015				13
14	-.013	-.018	-.032	-.035		-.021	-.015	.133				14
15	-.022	-.041	-.047	-.046		-.043	-.030	-.017				15
16	-.075	-.068	-.078	-.065		-.063	-.029	.098				16
17	-.075	-.059	-.063	-.061								17
18	-.034	-.032	-.024	-.090		-.080	-.096	-.057				18
19	-.073	-.106	-.114	-.122	-.121	-.123	-.118	-.068				19
20	-.087	-.120	-.127	-.135	-.134	-.129	-.122	-.090				20
21	-.099	-.117	-.126	-.138	-.149	-.130	-.124	-.099				21
22	-.095	-.112	-.127	-.124	-.133	-.130	-.135	-.097				22

Table 4 Continued

Pressure coefficients on swept wing

Configuration 5 M=2.01 R=3.6 x 10^6

Orif	Station 1	2	3	4	24	5	6	7	8	9	10	Orif
					α= 0		δ= 5.0					
1	.840	.687	.793	.741		.766	.669	.873				1
2	.075	.096	.129	.139		.145	.151	.107				2
3	.043	.051	.100	.108		.108	.119	.019				3
4	.038	.021	.049	.063		.078	.071	.010				4
5	.029	-.002	.017	.040		.060	.054	.018				5
6	.010	-.005	.004	.022		.040	.041	.010				6
7	.005	-.007	-.010	.006		.028	.027	.014				7
8	-.001	-.019	-.025	-.009		.005	.017	.002				8
9	-.007	-.035	-.040	-.025		-.007	.011	.005				9
10	-.011	-.030		-.031		-.012	.002	-.017				10
11	-.013	-.026		-.030		-.015						11
12	-.016	-.024		-.031		-.015	-.004	-.013				12
13	-.016	-.022	-.028	-.032		-.018	-.011	.008				13
14	-.014	-.014	-.014	-.017		-.018	-.012	.123				14
15	-.025	.082	.053	.011		-.040	-.027	-.033				15
16	-.040	.162	.145	.140		-.064	-.029	.087				16
17	.057	.171	.064	.037								17
18	-.125	-.145	-.066	-.206		-.076	-.090	-.063				18
19	-.169	-.226	-.200	-.204	-.112	-.118	-.115	-.077				19
20	-.188	-.238	-.216	-.211	-.181	-.118	-.118	-.101				20
21	-.196	-.244	-.213	-.209	-.215	-.117	-.117	-.109				21
22	-.197	-.186	-.209	-.193	-.178	-.112	-.126	-.105				22
					α= 0		δ= 10.0					
1	.844	.688	.796	.736		.768	.670	.872				1
2	.076	.096	.132	.140		.143	.152	.107				2
3	.042	.054	.101	.106		.107	.118	.014				3
4	.038	.020	.050	.064		.080	.070	.012				4
5	.029	.000	.014	.040		.059	.054	.018				5
6	.009	-.005	.004	.022		.040	.044	.012				6
7	.006	-.008	-.009	.009		.028	.029	.014				7
8	.000	-.013	-.026	-.008		.008	.017	.004				8
9	-.004	-.029	-.038	-.026		-.007	.012	.005				9
10	-.011	-.029		-.025		-.012	.005	-.016				10
11	-.014	-.024		-.034		-.015						11
12	-.015	-.025		-.032		-.016	-.003	-.015				12
13	-.013	-.019	-.031	-.036		-.020	-.007	.004				13
14	-.013	.016	.116	.030		-.018	-.012	.123				14
15	-.025	.202	.191	.157		-.039	-.025	-.038				15
16	.118	.239	.213	.140		-.062	-.030	.086				16
17	.275	.178	.194	.155								17
18	-.128	-.103	-.103	-.171		-.076	-.091	-.066				18
19	-.127	-.170	-.193	-.182	-.089	-.116	-.112	-.084				19
20	-.138	-.172	-.199	-.196	-.177	-.118	-.118	-.104				20
21	-.164	-.159	-.199	-.187	-.195	-.111	-.120	-.110				21
22	-.153	-.117	-.196	-.195	-.185	-.104	-.129	-.108				22
					α= 0		δ= 20.0					
1	.842	.689	.796	.739		.767	.666	.872				1
2	.076	.097	.129	.140		.144	.153	.105				2
3	.043	.053	.101	.110		.109	.119	.016				3
4	.040	.024	.051	.063		.079	.071	.007				4
5	.031	.003	.016	.039		.057	.055	.017				5
6	.011	-.002	.001	.021		.040	.042	.009				6
7	.005	-.006	-.010	.007		.026	.025	.013				7
8	.001	-.012	-.025	-.010		.005	.017	-.002				8
9	-.005	-.031	-.039	-.026		-.006	.010	.001				9
10	-.011	-.028		-.024		-.012	.000	-.017				10
11	-.013	-.026		-.033		-.017						11
12	-.014	-.022		-.027		-.016	-.004	-.021				12
13	-.015	-.020	.029	.009		-.022	-.010	.003				13
14	-.015	.205	.195	.185		-.017	-.013	.107				14
15	-.016	.197	.193	.175		-.036	-.026	-.035				15
16	.109	.360	.250	.205		-.036	-.005	.083				16
17	1.467	1.129	.807	.775								17
18	-.208	-.184	-.194	-.226		-.055	-.093	-.067				18
19	-.204	-.238	-.253	-.248	-.098	-.089	-.117	-.083				19
20	-.214	-.238	-.259	-.254	-.193	-.087	-.121	-.102				20
21	-.226	-.227	-.260	-.254	-.248	-.073	-.124	-.109				21
22	-.226	-.161	-.244	-.259	-.224	-.071	-.130	-.110				22

Table 4 Continued

Pressure coefficients on swept wing

Configuration 5 M=2.01 R=3.6 x 10^6

Orif	Station 1	2	3	4	24	5	6	7	8	9	10	Orif
					α= 0		δ= 30.0					
1	.838	.685	.790	.736		.764	.669	.872				1
2	.073	.094	.130	.140		.145	.154	.110				2
3	.041	.048	.096	.104		.107	.120	.012				3
4	.035	.019	.049	.058		.079	.069	.007				4
5	.029	-.001	.015	.037		.057	.054	.014				5
6	.006	-.006	.000	.019		.040	.043	.008				6
7	.000	-.011	-.011	.004		.024	.026	.012				7
8	-.001	-.020	-.028	-.011		.006	.018	-.001				8
9	-.008	-.035	-.039	-.029		-.007	.011	.002				9
10	-.012	-.032		-.027		-.012	.001	-.018				10
11	-.017	-.029		-.034		-.015						11
12	-.015	-.026		-.033		-.017	-.003	-.021				12
13	-.016	-.023	-.030	-.035		-.018	-.010	.003				13
14	-.013	-.023	-.016	.113		-.017	-.013	.090				14
15	-.021	.123	.190	.229		-.007	-.023	-.033				15
16	.017	.179	.216	.285		.021	.009	.088				16
17	.678	.831	.805	.730								17
18	-.177	-.276	-.277	-.247		-.015	-.089	-.064				18
19	-.281	-.296	-.275	-.249	-.207	-.007	-.116	-.078				19
20	-.283	-.291	-.281	-.265	-.248	-.024	-.119	-.099				20
21	-.297	-.285	-.281	-.264	-.264	-.045	-.121	-.108				21
22	-.284	-.248	-.271	-.260	-.253	-.070	-.127	-.105				22
					α= 3		δ= 0.0					
1	.872	.652	.777	.700		.789	.585	.858				1
2	.030	.008	.026	.028		.032	.035	.029				2
3	-.010	-.019	.008	.018		.011	.027	.006				3
4	-.010	-.050	-.027	-.017		-.010	-.006	-.011				4
5	-.023	-.055	-.048	-.036		-.027	-.023	-.009				5
6	-.034	-.060	-.060	-.049		-.035	-.036	-.026				6
7	-.038	-.063	-.071	-.057		-.042	-.051	-.019				7
8	-.038	-.071	-.088	-.072		-.058	-.057	-.032				8
9	-.052	-.081	-.095	-.086		-.069	-.059	-.028				9
10	-.053	-.075		-.084		-.071	-.067	-.049				10
11	-.058	-.071		-.091		-.073						11
12	-.058	-.071		-.090		-.075	-.069	-.063				12
13	-.058	-.066	-.080	-.090		-.076	-.069	-.048				13
14	-.059	-.065	-.082	-.092		-.075	-.072	.116				14
15	-.064	-.082	-.094	-.101		-.096	-.079	-.087				15
16	-.105	-.074	-.085	-.081		-.104	-.064	.045				16
17	-.087	-.068	-.066	-.063								17
18	-.075	-.080	-.088	-.108		-.126	-.135	-.114				18
19	-.097	-.139	-.150	-.161	-.159	-.161	-.155	-.112				19
20	-.151	-.149	-.160	-.187	-.182	-.165	-.161	-.120				20
21	-.138	-.143	-.159	-.173	-.180	-.167	-.163	-.120				21
22	-.129	-.124	-.158	-.151	-.163	-.168	-.165	-.116				22
					α= 6		δ= -30.0					
1	.891	.579	.709	.609		.808	.452	.908				1
2	-.010	-.061	-.052	-.051		-.058	-.052	-.017				2
3	-.055	-.080	-.062	-.052		-.069	-.053	-.028				3
4	-.059	-.112	-.087	-.087		-.089	-.087	-.064				4
5	-.061	-.112	-.105	-.094		-.088	-.095	-.062				5
6	-.073	-.105	-.114	-.103		-.097	-.102	-.074				6
7	-.075	-.108	-.122	-.113		-.109	-.112	-.078				7
8	-.076	-.109	-.136	-.126		-.124	-.121	-.088				8
9	-.088	-.120	-.149	-.140		-.130	-.127	-.095				9
10	-.090	-.115		-.136		-.132	-.131	-.115				10
11	-.092	-.110		-.141		-.134						11
12	-.092	-.110		-.140		-.132	-.131	-.192				12
13	-.095	-.105	-.128	-.141		-.136	-.131	-.189				13
14	-.094	-.104	-.126	.035		-.133	-.134	-.093				14
15	-.099	-.110	.044	.084		-.140	-.136	-.186				15
16	-.064	.021	.062	.050		-.126	-.114	-.036				16
17	1.786	1.175	1.277	1.291								17
18	.096	-.044	-.032	-.029		-.152	-.186	-.205				18
19	-.218	-.107	-.058	.042	-.195	-.160	-.204	-.215				19
20	-.056	-.059	-.061	.016	-.114	-.146	-.208	-.210				20
21	.015	.162	.040	-.117	-.170	-.140	-.208	-.209				21
22	.107	.236	.320	-.109	-.250	-.083	-.139	-.215				22

Table 4 Continued

Pressure coefficients on swept wing

Configuration 5 M=2.01 R=3.6 x 10^6

Orif	Station 1	2	3	4	24	5	6	7	8	9	10	Orif
					α= 6		δ= -20.0					
1	.891	.573	.711	.612		.810	.450	.908				1
2	-.011	-.062	-.049	-.051		-.052	-.052	-.017				2
3	-.060	-.082	-.059	-.053		-.063	-.052	-.027				3
4	-.060	-.115	-.088	-.086		-.082	-.086	-.061				4
5	-.069	-.114	-.104	-.092		-.084	-.094	-.059				5
6	-.076	-.105	-.113	-.102		-.094	-.097	-.072				6
7	-.080	-.107	-.122	-.111		-.103	-.108	-.073				7
8	-.080	-.109	-.140	-.124		-.120	-.119	-.087				8
9	-.091	-.119	-.148	-.134		-.128	-.124	-.088				9
10	-.092	-.115		-.134		-.130	-.128	-.110				10
11	-.095	-.109		-.139		-.131						11
12	-.097	-.108		-.139		-.130	-.130	-.187				12
13	-.096	-.105	-.128	-.138		-.132	-.130	-.188				13
14	-.098	-.102	-.124	-.140		-.132	-.130	-.086				14
15	-.101	-.118	-.131	-.095		-.147	-.134	-.188				15
16	-.105	-.026	-.031	.029		-.153	-.115	-.038				16
17	1.980	.980	.744	.638								17
18	-.226	-.162	-.120	-.055		-.175	-.182	-.205				18
19	-.157	-.129	-.107	-.059	-.118	-.208	-.201	-.213				19
20	-.054	-.015	-.004	-.061	-.126	-.211	-.207	-.206				20
21	-.031	.019	.038	-.120	-.159	-.211	-.205	-.204				21
22	-.032	.012	.020	-.122	-.231	-.130	-.180	-.213				22
					α= 6		δ=-10.0					
1	.887	.575	.711	.607		.804	.455	.911				1
2	-.011	-.060	-.050	-.052		-.058	-.049	-.017				2
3	-.055	-.081	-.063	-.055		-.068	-.054	-.024				3
4	-.055	-.112	-.091	-.088		-.084	-.086	-.058				4
5	-.063	-.113	-.106	-.099		-.091	-.090	-.057				5
6	-.073	-.108	-.115	-.107		-.099	-.098	-.068				6
7	-.077	-.110	-.123	-.116		-.110	-.111	-.071				7
8	-.077	-.111	-.138	-.126		-.117	-.120	-.081				8
9	-.090	-.118	-.147	-.140		-.124	-.122	-.086				9
10	-.092	-.112		-.139		-.128	-.128	-.109				10
11	-.094	-.110		-.141		-.128						11
12	-.095	-.107		-.143		-.126	-.127	-.183				12
13	-.096	-.105	-.129	-.143		-.131	-.127	-.184				13
14	-.094	-.103	-.125	-.143		-.128	-.130	-.080				14
15	-.101	-.118	-.139	-.153		-.146	-.136	-.184				15
16	-.149	-.132	-.134	-.071		-.156	-.119	-.037				16
17	-.088	.046	.093	.052								17
18	-.170	-.155	-.169	-.145		-.173	-.180	-.206				18
19	-.127	-.124	-.127	-.151	-.165	-.205	-.199	-.211				19
20	-.148	-.107	-.107	-.175	-.184	-.210	-.203	-.206				20
21	-.110	-.101	-.101	-.172	-.182	-.210	-.202	-.206				21
22	-.103	-.077	-.090	-.142	-.176	-.202	-.191	-.209				22
					α= 6		δ=- 5.0					
1	.892	.577	.712	.607		.808	.457	.912				1
2	-.007	-.060	-.053	-.053		-.056	-.049	-.017				2
3	-.055	-.079	-.060	-.054		-.069	-.050	-.025				3
4	-.056	-.109	-.090	-.090		-.086	-.084	-.061				4
5	-.062	-.114	-.106	-.097		-.095	-.090	-.057				5
6	-.072	-.107	-.118	-.104		-.099	-.097	-.067				6
7	-.077	-.106	-.123	-.114		-.112	-.111	-.071				7
8	-.076	-.111	-.139	-.123		-.117	-.120	-.084				8
9	-.089	-.118	-.148	-.135		-.125	-.122	-.086				9
10	-.090	-.115		-.135		-.127	-.127	-.109				10
11	-.095	-.110		-.141		-.129						11
12	-.095	-.106		-.140		-.126	-.126	-.180				12
13	-.096	-.102	-.130	-.140		-.129	-.128	-.186				13
14	-.092	-.103	-.124	-.144		-.128	-.128	-.083				14
15	-.102	-.118	-.138	-.150		-.145	-.134	-.183				15
16	-.139	-.151	-.134	-.128		-.153	-.118	-.040				16
17	-.166	-.146	-.193	-.152								17
18	-.139	-.125	-.137	-.142		-.171	-.182	-.200				18
19	-.125	-.147	-.155	-.188	-.190	-.204	-.198	-.204				19
20	-.172	-.152	-.156	-.221	-.219	-.204	-.203	-.201				20
21	-.145	-.150	-.154	-.200	-.204	-.208	-.203	-.197				21
22	-.122	-.100	-.120	-.142	-.166	-.199	-.193	-.200				22

Table 4 Continued

Pressure coefficients on swept wing

Configuration 5 M=2.01 R=3.6 x 10^6

Orif	Station 1	2	3	4	24	5	6	7	8	9	10	Orif
					α= 6		δ= 0.0					
1	.889	.578	.712	.609		.808	.457	.914				1
2	-.006	-.054	-.043	-.050		-.049	-.044	-.011				2
3	-.054	-.075	-.056	-.051		-.058	-.045	-.023				3
4	-.053	-.103	-.085	-.082		-.075	-.076	-.055				4
5	-.058	-.108	-.101	-.089		-.084	-.082	-.055				5
6	-.071	-.102	-.112	-.101		-.095	-.096	-.060				6
7	-.075	-.102	-.118	-.108		-.100	-.105	-.066				7
8	-.077	-.108	-.133	-.121		-.111	-.113	-.078				8
9	-.087	-.116	-.142	-.129		-.120	-.116	-.078				9
10	-.089	-.107		-.128		-.121	-.119	-.101				10
11	-.095	-.104		-.135		-.121						11
12	-.090	-.103		-.133		-.120	-.118	-.164				12
13	-.093	-.099	-.124	-.135		-.122	-.121	-.164				13
14	-.092	-.100	-.123	-.139		-.122	-.123	-.064				14
15	-.093	-.112	-.132	-.140		-.140	-.125	-.159				15
16	-.118	-.079	-.093	-.093		-.141	-.109	-.027				16
17	-.091	-.064	-.065	-.063								17
18	-.102	-.105	-.119	-.133		-.163	-.176	-.178				18
19	-.121	-.163	-.180	-.200	-.192	-.197	-.190	-.187				19
20	-.182	-.175	-.190	-.228	-.220	-.195	-.192	-.184				20
21	-.167	-.169	-.186	-.209	-.215	-.200	-.194	-.182				21
22	-.144	-.115	-.167	-.166	-.183	-.192	-.189	-.186				22
					α= 6		δ= 5.0					
1	.893	.577	.714	.611		.808	.456	.910				1
2	-.010	-.057	-.048	-.054		-.055	-.048	-.017				2
3	-.055	-.080	-.063	-.052		-.066	-.052	-.028				3
4	-.054	-.111	-.086	-.086		-.083	-.085	-.059				4
5	-.062	-.115	-.105	-.095		-.092	-.092	-.062				5
6	-.072	-.109	-.112	-.103		-.099	-.101	-.068				6
7	-.073	-.107	-.124	-.116		-.110	-.111	-.075				7
8	-.075	-.108	-.137	-.126		-.119	-.121	-.085				8
9	-.087	-.118	-.147	-.136		-.128	-.126	-.090				9
10	-.088	-.112		-.134		-.129	-.128	-.109				10
11	-.092	-.105		-.140		-.130						11
12	-.090	-.104		-.139		-.129	-.129	-.187				12
13	-.096	-.103	-.128	-.140		-.132	-.131	-.188				13
14	-.095	-.101	-.124	-.140		-.132	-.131	-.085				14
15	-.099	-.036	-.046	-.115		-.148	-.137	-.183				15
16	-.101	.037	.010	-.002		-.149	-.116	-.038				16
17	-.004	.061	-.006	-.007								17
18	-.135	-.119	-.128	-.141		-.172	-.184	-.207				18
19	-.161	-.172	-.200	-.193	-.183	-.204	-.201	-.214				19
20	-.167	-.160	-.194	-.218	-.219	-.203	-.209	-.207				20
21	-.170	-.136	-.194	-.211	-.228	-.204	-.206	-.206				21
22	-.139	-.075	-.166	-.168	-.206	-.189	-.189	-.211				22
					α= 6		δ= 10.0					
1	.890	.576	.713	.607		.807	.459	.914				1
2	-.010	-.066	-.049	-.051		-.054	-.049	-.011				2
3	-.056	-.080	-.060	-.054		-.064	-.048	-.022				3
4	-.057	-.113	-.088	-.087		-.083	-.080	-.056				4
5	-.063	-.113	-.106	-.095		-.089	-.089	-.054				5
6	-.075	-.105	-.116	-.104		-.097	-.097	-.062				6
7	-.077	-.107	-.125	-.112		-.106	-.107	-.069				7
8	-.075	-.109	-.139	-.125		-.118	-.117	-.081				8
9	-.089	-.119	-.152	-.138		-.127	-.120	-.081				9
10	-.092	-.114		-.133		-.127	-.129	-.108				10
11	-.092	-.110		-.140		-.125						11
12	-.096	-.108		-.139		-.125	-.127	-.184				12
13	-.097	-.105	-.132	-.139		-.130	-.126	-.189				13
14	-.095	-.093	-.007	-.097		-.127	-.130	-.083				14
15	-.099	.075	.049	.016		-.143	-.131	-.186				15
16	-.011	.116	.070	.030		-.143	-.111	-.039				16
17	.282	.070	.055	.029								17
18	-.168	-.153	-.161	-.166		-.169	-.178	-.206				18
19	-.178	-.218	-.238	-.234	-.177	-.201	-.201	-.215				19
20	-.204	-.213	-.240	-.257	-.241	-.204	-.203	-.208				20
21	-.217	-.197	-.241	-.243	-.255	-.204	-.202	-.208				21
22	-.196	-.124	-.183	-.186	-.223	-.184	-.190	-.215				22

Table 4 Continued

Pressure coefficients on swept wing

Configuration 5 M=2.01 R=3.6 x 10^6

Orif	Station 1	2	3	4	24	5	6	7	8	9	10	Orif
					α= 6		δ= 20.0					
1	.888	.576	.713	.612		.807	.460	.910				1
2	-.013	-.064	-.051	-.052		-.057	-.048	-.013				2
3	-.060	-.083	-.061	-.054		-.065	-.048	-.025				3
4	-.060	-.117	-.090	-.086		-.083	-.084	-.059				4
5	-.071	-.114	-.107	-.093		-.090	-.091	-.058				5
6	-.079	-.108	-.118	-.102		-.097	-.097	-.065				6
7	-.080	-.111	-.126	-.117		-.106	-.108	-.073				7
8	-.081	-.111	-.140	-.125		-.118	-.118	-.081				8
9	-.091	-.122	-.150	-.136		-.124	-.123	-.088				9
10	-.094	-.114		-.138		-.129	-.130	-.109				10
11	-.094	-.112		-.136		-.130						11
12	-.096	-.110		-.127		-.128	-.129	-.184				12
13	-.096	-.109	-.052	.066		-.116	-.127	-.184				13
14	-.097	.070	.064	.084		-.089	-.129	-.086				14
15	-.082	.072	.053	.044		-.104	-.130	-.180				15
16	.006	.234	.124	-.107		-.106	-.110	-.035				16
17	1.118	.849	.472	.030								17
18	-.221	-.209	-.220	-.221		-.144	-.180	-.204				18
19	-.229	-.260	-.275	-.271	-.218	-.180	-.200	-.214				19
20	-.241	-.257	-.276	-.286	-.266	-.186	-.205	-.208				20
21	-.243	-.245	-.278	-.269	-.264	-.191	-.205	-.206				21
22	-.243	-.176	-.210	-.206	-.275	-.140	-.192	-.211				22
					α= 6		δ= 30.0					
1	.886	.574	.713	.613		.810	.457	.910				1
2	-.012	-.064	-.050	-.052		-.052	-.052	-.016				2
3	-.060	-.081	-.061	-.052		-.065	-.053	-.027				3
4	-.060	-.114	-.090	-.084		-.080	-.086	-.061				4
5	-.069	-.113	-.103	-.093		-.088	-.092	-.061				5
6	-.077	-.106	-.116	-.103		-.096	-.099	-.070				6
7	-.082	-.109	-.124	-.111		-.106	-.112	-.073				7
8	-.082	-.110	-.136	-.124		-.121	-.120	-.082				8
9	-.094	-.122	-.148	-.136		-.119	-.127	-.087				9
10	-.095	-.117		-.134		.004	-.134	-.108				10
11	-.095	-.111		-.030		-.004						11
12	-.095	-.109		.107		-.023	-.125	-.186				12
13	-.096	-.105	-.025	.123		-.053	-.113	-.185				13
14	-.097	-.090	.097	.101		-.080	-.100	-.092				14
15	-.006	.084	.099	.005		-.113	-.095	-.190				15
16	.050	.131	.120	-.182		-.126	-.078	-.031				16
17	.589	.709	1.022	.064								17
18	-.228	-.251	-.260	-.250		-.161	-.162	-.202				18
19	-.266	-.279	-.275	-.261	-.256	-.181	-.186	-.211				19
20	-.271	-.279	-.275	-.263	-.269	-.194	-.191	-.206				20
21	-.273	-.268	-.277	-.252	-.252	-.201	-.188	-.207				21
22	-.271	-.218	-.245	-.242	-.224	-.119	-.120	-.211				22
					α= 9		δ= -20.0					
1	.916	.480	.589	.506		.782	.317	.965				1
2	-.053	-.118	-.115	-.120		-.123	-.124	-.092				2
3	-.097	-.140	-.120	-.118		-.128	-.122	-.089				3
4	-.096	-.162	-.143	-.140		-.141	-.142	-.118				4
5	-.102	-.169	-.155	-.151		-.146	-.149	-.110				5
6	-.108	-.165	-.164	-.156		-.151	-.152	-.126				6
7	-.114	-.150	-.170	-.161		-.158	-.162	-.143				7
8	-.115	-.153	-.182	-.169		-.170	-.168	-.167				8
9	-.122	-.155	-.189	-.179		-.178	-.170	-.193				9
10	-.125	-.150		-.179		-.179	-.176	-.210				10
11	-.126	-.144		-.182		-.180						11
12	-.128	-.145		-.182		-.177	-.175	-.248				12
13	-.130	-.140	-.182	-.182		-.178	-.176	-.241				13
14	-.128	-.139	-.169	-.183		-.176	-.179	-.212				14
15	-.135	-.144	-.137	-.125		-.189	-.179	-.278				15
16	-.122	-.055	-.070	-.039		-.191	-.162	-.092				16
17	2.049	1.032	.837	.774								17
18	-.233	-.195	-.178	-.139		-.209	-.220	-.280				18
19	-.191	-.164	-.164	-.139	-.180	-.238	-.235	-.274				19
20	-.123	-.082	-.082	-.145	-.193	-.240	-.239	-.262				20
21	-.080	-.040	-.024	-.175	-.188	-.242	-.236	-.256				21
22	-.069	-.029	-.035	-.153	-.222	-.158	-.170	-.245				22

Table 4 Continued

Pressure coefficients on swept wing

Configuration 5 M= 2.01 R= 3.6 x 10^6

Orif	Station 1	2	3	4	24	5	6	7	8	9	10	Orif
					α= 9		δ= -10.0					
1	.918	.475	.588	.506		.781	.318	.967				1
2	-.054	-.118	-.114	-.125		-.127	-.123	-.090				2
3	-.100	-.139	-.125	-.123		-.129	-.120	-.085				3
4	-.096	-.161	-.149	-.145		-.144	-.145	-.121				4
5	-.100	-.171	-.158	-.154		-.149	-.147	-.111				5
6	-.108	-.162	-.166	-.159		-.153	-.153	-.130				6
7	-.113	-.149	-.173	-.161		-.162	-.164	-.141				7
8	-.117	-.151	-.184	-.171		-.170	-.167	-.167				8
9	-.123	-.158	-.192	-.182		-.178	-.168	-.193				9
10	-.125	-.152		-.182		-.178	-.173	-.211				10
11	-.125	-.143		-.183		-.178						11
12	-.125	-.140		-.184		-.178	-.176	-.248				12
13	-.126	-.139	-.184	-.186		-.180	-.178	-.235				13
14	-.128	-.138	-.174	-.186		-.178	-.181	-.206				14
15	-.134	-.154	-.179	-.187		-.190	-.182	-.273				15
16	-.169	-.161	-.163	-.119		-.189	-.166	-.093				16
17	-.056	.077	.121	.092								17
18	-.192	-.179	-.202	-.190		-.209	-.219	-.270				18
19	-.159	-.161	-.169	-.204	-.209	-.233	-.237	-.268				19
20	-.180	-.155	-.155	-.236	-.238	-.240	-.238	-.257				20
21	-.153	-.152	-.149	-.213	-.220	-.241	-.237	-.254				21
22	-.126	-.089	-.109	-.151	-.184	-.209	-.192	-.243				22
					α= 9		δ= - 5.0					
1	.916	.479	.588	.506		.781	.316	.966				1
2	-.049	-.118	-.114	-.121		-.122	-.125	-.094				2
3	-.093	-.140	-.123	-.122		-.127	-.122	-.089				3
4	-.095	-.159	-.144	-.142		-.142	-.142	-.118				4
5	-.099	-.169	-.158	-.152		-.147	-.151	-.113				5
6	-.108	-.162	-.162	-.156		-.151	-.152	-.126				6
7	-.110	-.146	-.170	-.158		-.160	-.163	-.140				7
8	-.114	-.150	-.181	-.168		-.169	-.167	-.165				8
9	-.123	-.154	-.188	-.180		-.176	-.168	-.188				9
10	-.123	-.148		-.178		-.175	-.173	-.205				10
11	-.123	-.143		-.181		-.176						11
12	-.124	-.142		-.180		-.175	-.172	-.245				12
13	-.125	-.139	-.179	-.181		-.173	-.173	-.222				13
14	-.127	-.135	-.173	-.183		-.174	-.179	-.198				14
15	-.135	-.147	-.173	-.185		-.188	-.179	-.257				15
16	-.160	-.158	-.164	-.157		-.188	-.163	-.089				16
17	-.152	-.126	-.175	-.175								17
18	-.159	-.161	-.172	-.186		-.207	-.219	-.258				18
19	-.166	-.185	-.185	-.231	-.217	-.234	-.231	-.257				19
20	-.198	-.195	-.192	-.264	-.261	-.236	-.234	-.251				20
21	-.184	-.192	-.187	-.234	-.242	-.238	-.232	-.240				21
22	-.153	-.103	-.114	-.152	-.173	-.213	-.201	-.236				22
					α= 9		δ= 0.0					
1	.915	.476	.588	.505		.782	.324	.968				1
2	-.052	-.115	-.107	-.118		-.117	-.110	-.081				2
3	-.091	-.136	-.118	-.118		-.122	-.110	-.075				3
4	-.094	-.156	-.140	-.140		-.138	-.130	-.106				4
5	-.096	-.163	-.151	-.147		-.141	-.136	-.104				5
6	-.106	-.159	-.161	-.153		-.143	-.144	-.118				6
7	-.110	-.145	-.166	-.155		-.154	-.151	-.128				7
8	-.116	-.147	-.176	-.162		-.158	-.158	-.145				8
9	-.121	-.154	-.183	-.174		-.165	-.158	-.163				9
10	-.122	-.147		-.172		-.161	-.160	-.184				10
11	-.124	-.142		-.173		-.162						11
12	-.127	-.138		-.173		-.161	-.162	-.228				12
13	-.128	-.137	-.172	-.173		-.163	-.163	-.203				13
14	-.128	-.134	-.161	-.168		-.163	-.164	-.176				14
15	-.128	-.143	-.164	-.171		-.177	-.163	-.239				15
16	-.130	-.097	-.109	-.116		-.173	-.148	-.081				16
17	-.061	-.013	-.067	-.065								17
18	-.141	-.170	-.161	-.189		-.198	-.207	-.244				18
19	-.183	-.218	-.220	-.246	-.222	-.223	-.220	-.243				19
20	-.227	-.232	-.231	-.274	-.268	-.226	-.222	-.237				20
21	-.216	-.228	-.226	-.250	-.256	-.226	-.222	-.229				21
22	-.192	-.128	-.139	-.178	-.197	-.202	-.192	-.227				22

Table 4 Continued

Pressure coefficients on swept wing

Configuration 5 M=2.01 R=3.6 x 10^6

Orif	Station 1	2	3	4	24	5	6	7	8	9	10	Orif
					α= 12		δ= -30.0					
1	.932	.361	.411	.369		.747	.202	.991				1
2	-.091	-.173	-.173	-.182		-.191	-.196	-.186				2
3	-.124	-.189	-.180	-.178		-.188	-.183	-.186				3
4	-.125	-.204	-.193	-.193		-.197	-.198	-.200				4
5	-.130	-.212	-.201	-.203		-.201	-.202	-.244				5
6	-.138	-.214	-.207	-.204		-.203	-.205	-.265				6
7	-.140	-.203	-.210	-.211		-.205	-.209	-.278				7
8	-.141	-.191	-.222	-.216		-.213	-.213	-.286				8
9	-.152	-.189	-.229	-.225		-.220	-.217	-.294				9
10	-.152	-.183		-.220		-.219	-.219	-.282				10
11	-.155	-.178		-.222		-.221						11
12	-.153	-.176		-.221		-.217	-.221	-.297				12
13	-.155	-.173	-.227	-.212		-.217	-.219	-.288				13
14	-.155	-.171	-.095	-.067		-.216	-.219	-.297				14
15	-.161	-.076	-.060	-.056		-.226	-.220	-.318				15
16	-.106	-.031	-.061	-.057		-.217	-.204	-.087				16
17	1.946	1.296	1.336	1.279								17
18	.231	-.011	.024	-.183		-.236	-.250	-.312				18
19	-.258	-.183	-.170	-.182	-.235	-.246	-.266	-.306				19
20	-.182	-.182	-.172	-.097	-.235	-.229	-.269	-.307				20
21	-.108	.001	-.115	-.219	-.234	-.221	-.266	-.300				21
22	.000	.176	.122	-.191	-.270	-.140	-.149	-.279				22
					α= 12		δ= -20.0					
1	.931	.359	.409	.370		.748	.201	.991				1
2	-.092	-.172	-.174	-.181		-.191	-.195	-.185				2
3	-.125	-.188	-.182	-.179		-.186	-.184	-.184				3
4	-.131	-.204	-.195	-.195		-.195	-.197	-.194				4
5	-.132	-.213	-.202	-.200		-.200	-.202	-.240				5
6	-.140	-.215	-.207	-.204		-.203	-.201	-.260				6
7	-.144	-.203	-.213	-.209		-.204	-.210	-.272				7
8	-.144	-.191	-.220	-.216		-.215	-.211	-.278				8
9	-.153	-.192	-.230	-.223		-.219	-.214	-.286				9
10	-.156	-.187		-.219		-.221	-.216	-.277				10
11	-.157	-.179		-.220		-.221						11
12	-.156	-.175		-.221		-.219	-.217	-.293				12
13	-.156	-.173	-.226	-.222		-.220	-.217	-.281				13
14	-.157	-.171	-.223	-.224		-.216	-.218	-.288				14
15	-.161	-.163	-.137	-.150		-.227	-.219	-.308				15
16	-.143	-.081	-.108	-.093		-.225	-.204	-.084				16
17	2.115	1.148	.944	.827								17
18	-.254	-.223	-.222	-.194		-.242	-.251	-.304				18
19	-.208	-.196	-.212	-.196	-.227	-.266	-.263	-.298				19
20	-.163	-.121	-.169	-.204	-.246	-.269	-.269	-.296				20
21	-.116	-.075	-.105	-.204	-.216	-.269	-.265	-.288				21
22	-.091	-.051	-.085	-.183	-.230	-.173	-.171	-.270				22
					α= 12		δ= -10.0					
1	.933	.363	.411	.372		.754	.202	.991				1
2	-.090	-.169	-.169	-.179		-.184	-.194	-.186				2
3	-.123	-.185	-.177	-.176		-.182	-.183	-.186				3
4	-.127	-.204	-.192	-.190		-.194	-.196	-.195				4
5	-.132	-.209	-.202	-.198		-.196	-.198	-.235				5
6	-.140	-.214	-.203	-.203		-.196	-.202	-.255				6
7	-.142	-.198	-.210	-.207		-.204	-.209	-.264				7
8	-.143	-.190	-.220	-.215		-.211	-.209	-.269				8
9	-.152	-.190	-.226	-.221		-.220	-.213	-.276				9
10	-.152	-.182		-.216		-.220	-.215	-.273				10
11	-.154	-.176		-.216		-.219						11
12	-.154	-.174		-.217		-.215	-.216	-.288				12
13	-.156	-.168	-.224	-.219		-.215	-.219	-.282				13
14	-.156	-.166	-.223	-.220		-.215	-.219	-.281				14
15	-.162	-.179	-.223	-.223		-.226	-.218	-.308				15
16	-.189	-.180	-.182	-.150		-.221	-.203	-.094				16
17	-.020	.195	.226	.190								17
18	-.224	-.205	-.237	-.232		-.240	-.249	-.306				18
19	-.175	-.178	-.207	-.227	-.228	-.263	-.262	-.299				19
20	-.188	-.161	-.186	-.261	-.262	-.265	-.265	-.295				20
21	-.169	-.154	-.171	-.211	-.226	-.268	-.265	-.290				21
22	-.134	-.087	-.122	-.163	-.203	-.186	-.178	-.277				22

Table 4 Continued

Pressure coefficients on swept wing

Configuration 5 M=2.01 R=3.6 x 10^6

Orif	Station 1	2	3	4	24	5	6	7	8	9	10	Orif
					α= 12		δ= - 5.0					
1	.934	.365	.413	.372		.752	.200	.995				1
2	-.089	-.168	-.165	-.175		-.178	-.186	-.177				2
3	-.121	-.183	-.175	-.174		-.179	-.179	-.175				3
4	-.126	-.197	-.188	-.189		-.189	-.190	-.183				4
5	-.127	-.206	-.198	-.192		-.191	-.194	-.221				5
6	-.138	-.209	-.200	-.199		-.193	-.198	-.236				6
7	-.140	-.195	-.204	-.204		-.199	-.204	-.246				7
8	-.140	-.186	-.215	-.209		-.210	-.204	-.251				8
9	-.148	-.189	-.222	-.214		-.213	-.205	-.257				9
10	-.150	-.179		-.209		-.215	-.206	-.257				10
11	-.153	-.173		-.212		-.213						11
12	-.153	-.173		-.213		-.211	-.211	-.278				12
13	-.155	-.167	-.219	-.212		-.209	-.213	-.269				13
14	-.154	-.164	-.219	-.213		-.208	-.213	-.268				14
15	-.158	-.177	-.217	-.213		-.217	-.212	-.301				15
16	-.169	-.169	-.191	-.175		-.216	-.197	-.096				16
17	-.129	-.094	-.179	-.175								17
18	-.178	-.174	-.202	-.218		-.236	-.244	-.301				18
19	-.179	-.196	-.215	-.246	-.234	-.257	-.257	-.294				19
20	-.190	-.191	-.215	-.269	-.270	-.259	-.260	-.290				20
21	-.197	-.178	-.203	-.235	-.251	-.261	-.257	-.281				21
22	-.159	-.093	-.133	-.164	-.192	-.190	-.185	-.270				22
					α= 12		δ= 0.0					
1	.933	.362	.411	.373		.750	.207	.994				1
2	-.090	-.160	-.154	-.165		-.168	-.173	-.158				2
3	-.118	-.177	-.164	-.165		-.169	-.167	-.155				3
4	-.121	-.190	-.182	-.179		-.179	-.179	-.167				4
5	-.127	-.198	-.190	-.183		-.178	-.183	-.193				5
6	-.134	-.203	-.196	-.191		-.184	-.185	-.207				6
7	-.137	-.188	-.202	-.194		-.190	-.191	-.213				7
8	-.140	-.183	-.207	-.198		-.200	-.194	-.226				8
9	-.148	-.182	-.216	-.207		-.205	-.196	-.240				9
10	-.149	-.178		-.203		-.204	-.199	-.247				10
11	-.152	-.169		-.205		-.204						11
12	-.153	-.165		-.207		-.203	-.200	-.272				12
13	-.154	-.163	-.212	-.208		-.204	-.202	-.262				13
14	-.149	-.161	-.208	-.207		-.202	-.203	-.247				14
15	-.157	-.169	-.202	-.200		-.211	-.202	-.300				15
16	-.151	-.114	-.135	-.135		-.208	-.186	-.095				16
17	-.016	.040	-.049	-.051								17
18	-.164	-.173	-.191	-.204		-.228	-.235	-.296				18
19	-.185	-.204	-.226	-.234	-.226	-.252	-.248	-.290				19
20	-.189	-.190	-.223	-.252	-.258	-.253	-.249	-.281				20
21	-.197	-.167	-.214	-.244	-.253	-.252	-.249	-.274				21
22	-.161	-.089	-.139	-.167	-.208	-.196	-.188	-.264				22
					α= 12		δ= 5.0					
1	.933	.363	.412	.371		.749	.204	.996				1
2	-.092	-.174	-.172	-.180		-.188	-.192	-.185				2
3	-.122	-.186	-.181	-.179		-.182	-.183	-.185				3
4	-.123	-.203	-.194	-.191		-.191	-.195	-.193				4
5	-.124	-.211	-.202	-.201		-.196	-.203	-.239				5
6	-.138	-.215	-.204	-.204		-.198	-.203	-.261				6
7	-.140	-.200	-.211	-.209		-.204	-.208	-.281				7
8	-.141	-.189	-.220	-.215		-.214	-.214	-.287				8
9	-.152	-.189	-.227	-.224		-.218	-.216	-.291				9
10	-.152	-.183		-.219		-.221	-.216	-.284				10
11	-.155	-.176		-.222		-.220						11
12	-.154	-.172		-.220		-.216	-.216	-.294				12
13	-.155	-.169	-.226	-.218		-.216	-.218	-.287				13
14	-.155	-.169	-.211	-.206		-.214	-.217	-.297				14
15	-.160	-.092	-.115	-.132		-.224	-.217	-.319				15
16	-.119	-.044	-.098	-.108		-.219	-.201	-.077				16
17	.017	.080	-.065	-.061								17
18	-.158	-.156	-.206	-.201		-.240	-.250	-.310				18
19	-.217	-.217	-.246	-.248	-.230	-.261	-.265	-.303				19
20	-.207	-.205	-.237	-.249	-.271	-.257	-.269	-.304				20
21	-.204	-.163	-.229	-.249	-.262	-.258	-.265	-.296				21
22	-.161	-.088	-.160	-.187	-.226	-.184	-.179	-.278				22

Table 4 Continued

Pressure coefficients on swept wing

Configuration 5 M=2.01 R=3.6 x 10^6

Orif	Station 1	2	3	4	24	5	6	7	8	9	10	Orif
					α= 12		δ= 10.0					
1	.930	.358	.408	.371		.751	.204	.994				1
2	-.094	-.174	-.176	-.182		-.189	-.193	-.182				2
3	-.126	-.185	-.183	-.179		-.185	-.183	-.185				3
4	-.130	-.206	-.199	-.196		-.196	-.195	-.191				4
5	-.132	-.215	-.203	-.200		-.198	-.197	-.238				5
6	-.140	-.218	-.208	-.201		-.199	-.200	-.260				6
7	-.141	-.204	-.214	-.209		-.202	-.208	-.279				7
8	-.144	-.192	-.224	-.214		-.213	-.210	-.284				8
9	-.152	-.193	-.229	-.226		-.220	-.214	-.290				9
10	-.156	-.185		-.219		-.218	-.215	-.278				10
11	-.158	-.181		-.217		-.219						11
12	-.156	-.177		-.217		-.217	-.216	-.294				12
13	-.158	-.174	-.216	-.221		-.219	-.216	-.287				13
14	-.159	-.155	-.113	-.132		-.215	-.217	-.299				14
15	-.161	-.023	-.094	-.097		-.224	-.219	-.314				15
16	-.080	.011	-.082	-.115		-.218	-.202	-.080				16
17	.128	.027	-.083	-.106								17
18	-.187	-.183	-.226	-.221		-.239	-.248	-.316				18
19	-.218	-.243	-.268	-.264	-.232	-.264	-.265	-.308				19
20	-.228	-.235	-.265	-.272	-.279	-.260	-.269	-.307				20
21	-.235	-.210	-.254	-.248	-.264	-.263	-.266	-.297				21
22	-.203	-.140	-.191	-.210	-.224	-.174	-.182	-.283				22
					α= 12		δ= 20.0					
1	.928	.363	.410	.373		.755	.203	.994				1
2	-.093	-.173	-.175	-.181		-.186	-.197	-.184				2
3	-.125	-.189	-.182	-.178		-.185	-.184	-.186				3
4	-.127	-.205	-.195	-.193		-.193	-.193	-.193				4
5	-.132	-.214	-.204	-.198		-.198	-.199	-.239				5
6	-.140	-.218	-.206	-.203		-.199	-.203	-.266				6
7	-.143	-.204	-.212	-.208		-.201	-.209	-.283				7
8	-.144	-.192	-.223	-.213		-.214	-.213	-.290				8
9	-.153	-.191	-.226	-.223		-.220	-.214	-.292				9
10	-.157	-.185		-.204		-.221	-.216	-.281				10
11	-.157	-.180		-.115		-.206						11
12	-.156	-.178		-.076		-.183	-.218	-.298				12
13	-.158	-.172	-.056	-.072		-.187	-.218	-.287				13
14	-.158	-.022	-.054	-.076		-.189	-.218	-.298				14
15	-.117	-.017	-.075	-.089		-.199	-.220	-.320				15
16	-.014	.173	-.082	-.143		-.198	-.203	-.078				16
17	.503	.484	-.096	-.186								17
18	-.213	-.224	-.264	-.262		-.224	-.251	-.319				18
19	-.237	-.268	-.287	-.282	-.255	-.248	-.268	-.311				19
20	-.250	-.270	-.284	-.267	-.285	-.254	-.268	-.308				20
21	-.254	-.253	-.254	-.236	-.251	-.243	-.258	-.297				21
22	-.245	-.187	-.225	-.248	-.229	-.152	-.159	-.281				22
					α= 12		δ= 30.0					
1	.929	.360	.410	.372		.753	.204	.994				1
2	-.092	-.172	-.174	-.180		-.186	-.192	-.180				2
3	-.125	-.186	-.179	-.179		-.185	-.182	-.183				3
4	-.127	-.204	-.195	-.190		-.184	-.195	-.193				4
5	-.131	-.209	-.201	-.202		-.119	-.197	-.237				5
6	-.140	-.214	-.206	-.204		-.032	-.190	-.260				6
7	-.143	-.200	-.213	-.173		-.043	-.178	-.279				7
8	-.146	-.190	-.220	-.067		-.057	-.158	-.285				8
9	-.151	-.191	-.228	-.020		-.082	-.157	-.291				9
10	-.154	-.183		-.035		-.105	-.163	-.281				10
11	-.157	-.179		-.047		-.124						11
12	-.157	-.174		-.064		-.140	-.174	-.295				12
13	-.158	-.171	-.030	-.065		-.163	-.170	-.283				13
14	-.098	-.002	-.035	-.056		-.178	-.172	-.297				14
15	-.012	.032	-.054	-.101		-.196	-.169	-.315				15
16	.012	.044	-.185	-.142		-.201	-.161	-.073				16
17	.207	.822	.022	-.251								17
18	-.239	-.266	-.282	-.269		-.225	-.224	-.313				18
19	-.275	-.293	-.293	-.263	-.276	-.237	-.243	-.302				19
20	-.274	-.292	-.275	-.252	-.273	-.242	-.237	-.303				20
21	-.285	-.278	-.263	-.242	-.251	-.231	-.176	-.294				21
22	-.277	-.232	-.251	-.261	-.234	-.147	-.108	-.256				22

Table 4 Concluded

Pressure coefficients on swept wing

Configuration 5 M=2.01 R=3.6 x 10^6

Orif	Station 1	2	3	4	24	5	6	7	8	9	10	Orif
					α= 15		δ= 0.0					
1	.946	.260	.238	.230		.638	.103	.888				1
2	-.116	-.203	-.203	-.213		-.214	-.229	-.233				2
3	-.140	-.210	-.208	-.210		-.211	-.218	-.222				3
4	-.149	-.222	-.219	-.216		-.213	-.219	-.233				4
5	-.151	-.233	-.226	-.220		-.211	-.223	-.267				5
6	-.157	-.233	-.230	-.226		-.214	-.222	-.281				6
7	-.161	-.228	-.232	-.226		-.220	-.223	-.298				7
8	-.166	-.220	-.238	-.222		-.224	-.220	-.294				8
9	-.165	-.213	-.243	-.225		-.229	-.221	-.298				9
10	-.174	-.203		-.220		-.226	-.223	-.290				10
11	-.178	-.196		-.214		-.224						11
12	-.176	-.192		-.215		-.220	-.222	-.306				12
13	-.174	-.188	-.218	-.216		-.222	-.231	-.292				13
14	-.172	-.170	-.216	-.206		-.226	-.231	-.302				14
15	-.170	-.175	-.210	-.203		-.236	-.224	-.319				15
16	-.153	-.118	-.168	-.162		-.231	-.210	-.073				16
17	-.021	.038	-.059	-.069								17
18	-.187	-.229	-.241	-.264		-.249	-.255	-.313				18
19	-.233	-.269	-.284	-.283	-.261	-.266	-.266	-.310				19
20	-.255	-.275	-.279	-.285	-.291	-.267	-.268	-.306				20
21	-.264	-.269	-.248	-.245	-.261	-.262	-.255	-.296				21
22	-.237	-.173	-.194	-.202	-.224	-.191	-.184	-.271				22
					α=		δ=					
					α=		δ=					

Table 5

Pressure coefficients on swept wing

Configuration 6 M=2.01 R=3.6 x 10^6

Orif	Station 1	2	3	4	24	5	6	7	8	9	10	Orif
					α=-15		δ= 4.2					
1	.621	.751	.731	.620		.150	.589	.159				1
2	.432	.563	.601	.630		.650	.672	.564				2
3	.401	.458	.523	.523		.570	.595	.416				3
4	.385	.402	.450	.491		.529	.531	.307				4
5	.357	.372	.414	.452		.487	.502	.237				5
6	.336	.349	.385	.425		.449	.466	.198				6
7	.330	.333	.365	.392		.416	.419	.169				7
8	.316	.308	.327	.355		.371	.411	.149				8
9	.314	.280	.303	.329		.360	.397	.128				9
10	.295	.283		.332		.357	.386	.107				10
11	.298	.293		.330		.358						11
12	.308	.283		.334		.359	.383	.054				12
13	.285	.289	.313	.325		.354	.368	.070				13
14	.289	.284	.302	.315		.346	.360	-.049				14
15	.280	.245	.265	.282		.284	.300	-.105				15
16	.243	.184	.191	.238		.125	-.159	.077				16
17						-.122	-.147	-.041				17
18	.208	.172	.187	.174		.095	.035	-.067				18
19	.174	.129	.144	.060	.064	-.012	.008	-.108				19
20	.158	.111	.117	.035	.066	-.021	.000	-.120				20
21	.132	.118	.116	.032	.036	-.018	-.006	-.119				21
22	.134	.120	.114	.025	-.040	-.018	-.008	-.107				22
					α=-12		δ= -16.8					
1	.713	.773	.784	.691		.339	.683	.394				1
2	.355	.483	.520	.552		.551	.578	.483				2
3	.330	.371	.415	.412		.469	.473	.319				3
4	.294	.313	.357	.393		.431	.435	.232				4
5	.280	.292	.323	.354		.391	.410	.170				5
6	.259	.269	.296	.333		.359	.377	.141				6
7	.252	.257	.279	.307		.329	.340	.107				7
8	.233	.232	.248	.276		.291	.319	.092				8
9	.236	.209	.221	.249		.273	.307	.075				9
10	.223	.209		.247		.267	.296	.052				10
11	.225	.219		.246		.266						11
12	.229	.210		.248		.266	.285	.001				12
13	.210	.215	.225	.236		.258	.276	.018				13
14	.217	.214	.220	.231		.255	.266	-.078				14
15	.205	.178	.194	.205		.210	.225	-.073				15
16	.181	.120	.130	.170		.078	-.105	.206				16
17						-.072	-.034	-.180				17
18	.148	.108	.122	.125		.557	.675	.186				18
19	.129	.075	.080	.120	.269	.528	.601	.285				19
20	.106	.051	.057	.102	.225	.474	.560	.283				20
21	.059	.059	.058	-.027	.200	.435	.523	.243				21
22	.068	.065	.055	-.078	.159	.412	.455	.195				22
					α=-12		δ= -10.1					
1	.711	.767	.785	.692		.332	.681	.388				1
2	.350	.478	.518	.551		.552	.578	.488				2
3	.325	.367	.414	.412		.467	.474	.317				3
4	.290	.312	.351	.394		.432	.431	.237				4
5	.276	.285	.323	.359		.391	.410	.170				5
6	.257	.263	.300	.335		.358	.377	.136				6
7	.254	.252	.282	.301		.332	.338	.106				7
8	.233	.227	.248	.275		.293	.320	.090				8
9	.237	.206	.222	.249		.276	.306	.071				9
10	.220	.208		.244		.270	.292	.052				10
11	.223	.214		.243		.267						11
12	.227	.207		.243		.266	.284	.000				12
13	.204	.216	.227	.237		.259	.275	.018				13
14	.209	.211	.222	.232		.257	.267	-.077				14
15	.200	.176	.193	.202		.209	.225	-.140				15
16	.173	.122	.128	.169		.080	-.145	.079				16
17						-.105	-.097	-.145				17
18	.143	.108	.120	.116		.344	.404	.098				18
19	.124	.075	.081	.103	.158	.317	.335	.063				19
20	.098	.049	.058	.103	.134	.285	.322	.077				20
21	.055	.059	.056	.069	.098	.258	.303	.045				21
22	.067	.062	.054	-.034	.070	.242	.275	.045				22

Table 5 Continued

Pressure coefficients on swept wing

Configuration 6 M=2.01 R=3.6 x 10^6

Orif	Station 1	2	3	4	24	5	6	7	8	9	10	Orif
					α=-12		δ= - 3.4					
1	.706	.769	.786	.689		.333	.681	.387				1
2	.348	.480	.517	.552		.552	.581	.489				2
3	.324	.369	.415	.414		.467	.478	.321				3
4	.289	.312	.356	.393		.429	.436	.237				4
5	.275	.291	.323	.355		.390	.412	.174				5
6	.254	.264	.300	.333		.362	.380	.144				6
7	.251	.254	.276	.307		.333	.337	.111				7
8	.235	.231	.243	.275		.292	.323	.093				8
9	.237	.206	.220	.248		.278	.307	.074				9
10	.218	.207		.248		.269	.295	.056				10
11	.225	.217		.248		.267						11
12	.229	.209		.243		.266	.288	.007				12
13	.206	.216	.225	.238		.261	.278	.020				13
14	.213	.213	.221	.236		.256	.270	-.078				14
15	.203	.174	.192	.206		.214	.228	-.142				15
16	.174	.127	.127	.168		.082	-.145	.052				16
17						-.126	-.096	-.107				17
18	.140	.110	.117	.110		.128	.160	-.017				18
19	.123	.076	.083	.072	.057	.108	.109	-.090				19
20	.099	.051	.057	.076	.033	.086	.099	-.098				20
21	.060	.060	.056	.058	.000	.076	.088	-.112				21
22	.068	.064	.057	.067	-.038	.085	.084	-.106				22
					α=-12		δ= 0.0					
1	.708	.763	.785	.689		.333	.686	.383				1
2	.348	.480	.521	.552		.556	.586	.489				2
3	.325	.369	.415	.414		.470	.481	.319				3
4	.290	.314	.359	.396		.432	.440	.241				4
5	.275	.292	.317	.357		.394	.416	.174				5
6	.254	.267	.294	.330		.363	.384	.141				6
7	.247	.255	.275	.307		.334	.343	.114				7
8	.235	.230	.247	.278		.295	.328	.094				8
9	.236	.207	.218	.251		.278	.310	.079				9
10	.221	.209		.248		.274	.297	.056				10
11	.225	.220		.242		.268						11
12	.230	.209		.245		.268	.291	.008				12
13	.209	.218	.222	.239		.265	.282	.022				13
14	.216	.213	.221	.231		.263	.275	-.078				14
15	.205	.177	.193	.206		.214	.231	-.143				15
16	.176	.127	.127	.168		.080	-.150	.051				16
17						-.128	-.106	-.081				17
18	.145	.105	.120	.112		.023	.047	-.088				18
19	.126	.072	.081	.049	-.005	.002	-.003	-.159				19
20	.105	.049	.054	.034	-.031	-.021	-.009	-.167				20
21	.065	.058	.057	.022	-.075	-.019	-.017	-.184				21
22	.073	.065	.057	.027	-.145	-.013	-.021	-.169				22
					α=-12		δ= 3.4					
1	.711	.768	.787	.687		.334	.683	.388				1
2	.351	.478	.517	.552		.556	.579	.490				2
3	.324	.362	.414	.414		.471	.472	.321				3
4	.291	.307	.354	.395		.432	.437	.233				4
5	.275	.288	.319	.357		.392	.410	.173				5
6	.250	.264	.295	.336		.363	.380	.142				6
7	.249	.249	.279	.310		.333	.338	.107				7
8	.229	.227	.244	.280		.290	.321	.090				8
9	.234	.201	.219	.252		.275	.307	.071				9
10	.219	.204		.246		.270	.295	.050				10
11	.220	.213		.241		.264						11
12	.227	.203		.244		.267	.288	.001				12
13	.204	.212	.224	.240		.259	.279	.004				13
14	.211	.209	.220	.233		.258	.270	-.080				14
15	.202	.175	.192	.207		.212	.225	-.147				15
16	.174	.124	.124	.168		.075	-.146	.049				16
17						-.111	-.109	-.087				17
18	.139	.104	.120	.108		.009	.000	-.104				18
19	.119	.072	.080	.022	.001	-.051	-.043	-.161				19
20	.097	.049	.057	-.001	-.009	-.065	-.048	-.174				20
21	.057	.058	.055	-.007	-.040	-.066	-.053	-.182				21
22	.068	.064	.053	-.013	-.149	-.062	-.057	-.164				22

Table 5 Continued

Pressure coefficients on swept wing

Configuration 6 M=2.01 R=3.6 x 10^6

Orif	Station 1	2	3	4	24	5	6	7	8	9	10	Orif
					α=-12		δ= 6.7					
1	.708	.768	.781	.693		.334	.680	.380				1
2	.352	.477	.519	.555		.556	.582	.487				2
3	.327	.366	.414	.415		.468	.474	.324				3
4	.296	.311	.351	.397		.436	.437	.240				4
5	.279	.288	.322	.359		.394	.417	.179				5
6	.254	.263	.300	.336		.365	.383	.145				6
7	.249	.253	.280	.307		.334	.343	.113				7
8	.232	.227	.247	.279		.294	.325	.095				8
9	.234	.202	.221	.252		.279	.311	.076				9
10	.220	.209		.247		.274	.300	.057				10
11	.224	.217		.246		.271						11
12	.226	.207		.247		.265	.292	.009				12
13	.204	.217	.227	.244		.259	.283	.020				13
14	.212	.211	.223	.239		.261	.273	-.076				14
15	.201	.174	.192	.212		.217	.230	-.145				15
16	.178	.127	.124	.171		.081	-.160	.052				16
17						-.120	-.120	-.066				17
18	.140	.109	.120	.111		-.010	-.035	-.114				18
19	.124	.074	.083	.008	-.016	-.077	-.072	-.174				19
20	.097	.050	.060	-.014	-.020	-.083	-.072	-.186				20
21	.061	.059	.059	-.018	-.059	-.085	-.077	-.196				21
22	.069	.065	.057	-.025	-.165	-.088	-.079	-.182				22
					α=-12		δ= 10.1					
1	.707	.765	.784	.691		.333	.683	.377				1
2	.352	.476	.521	.549		.559	.581	.490				2
3	.325	.363	.417	.414		.473	.477	.320				3
4	.292	.310	.358	.400		.431	.441	.240				4
5	.277	.292	.318	.360		.396	.414	.174				5
6	.253	.267	.294	.335		.364	.383	.147				6
7	.249	.254	.275	.308		.336	.342	.114				7
8	.233	.234	.241	.279		.300	.325	.093				8
9	.232	.207	.217	.251		.284	.311	.076				9
10	.221	.211		.247		.277	.300	.057				10
11	.221	.218		.248		.273						11
12	.227	.209		.246		.273	.291	.006				12
13	.205	.218	.221	.241		.266	.281	.019				13
14	.209	.213	.216	.236		.266	.263	-.076				14
15	.201	.176	.188	.211		.216	.227	-.143				15
16	.174	.132	.120	.169		.081	-.158	.055				16
17						-.125	-.126	-.058				17
18	.141	.109	.120	.115		-.037	-.073	-.137				18
19	.120	.074	.083	-.011	-.045	-.109	-.107	-.193				19
20	.097	.055	.056	-.036	-.045	-.120	-.111	-.205				20
21	.057	.061	.054	-.037	-.096	-.118	-.113	-.212				21
22	.068	.064	.054	-.038	-.174	-.117	-.115	-.200				22
					α=-12		δ= 16.8					
1	.712	.767	.786	.687		.332	.681	.371				1
2	.356	.485	.519	.553		.555	.585	.484				2
3	.329	.365	.415	.415		.471	.482	.323				3
4	.294	.314	.355	.397		.432	.442	.237				4
5	.282	.291	.321	.361		.395	.416	.174				5
6	.257	.268	.300	.338		.361	.385	.140				6
7	.251	.251	.282	.309		.334	.346	.110				7
8	.234	.231	.246	.281		.294	.323	.095				8
9	.239	.207	.225	.250		.280	.311	.072				9
10	.223	.209		.248		.274	.298	.054				10
11	.228	.217		.246		.271						11
12	.232	.208		.246		.271	.288	.002				12
13	.208	.217	.229	.239		.264	.279	.020				13
14	.214	.215	.222	.235		.262	.271	-.072				14
15	.206	.180	.194	.209		.217	.227	-.137				15
16	.179	.133	.126	.167		.083	-.164	.062				16
17						-.127	-.126	-.049				17
18	.146	.110	.122	.113		-.074	-.117	-.159				18
19	.122	.080	.082	-.026	-.087	-.151	-.144	-.215				19
20	.103	.053	.055	-.051	-.080	-.156	-.147	-.225				20
21	.063	.062	.059	-.051	-.142	-.157	-.151	-.230				21
22	.068	.065	.055	-.048	-.191	-.165	-.149	-.215				22

Table 5 Continued

Pressure coefficients on swept wing

Configuration 6 M=2.01 R=3.6 x 10^6

Orif	Station 1	2	3	4	24	5	6	7	8	9	10	Orif
					α= −12		δ= 23.6					
1	.707	.761	.782	.688		.331	.676	.373				1
2	.353	.477	.521	.552		.562	.583	.491				2
3	.325	.367	.420	.416		.475	.481	.327				3
4	.295	.312	.356	.403		.438	.441	.244				4
5	.279	.290	.323	.362		.398	.416	.176				5
6	.257	.265	.300	.340		.362	.383	.145				6
7	.250	.253	.280	.310		.333	.346	.112				7
8	.232	.231	.247	.282		.297	.325	.097				8
9	.236	.205	.225	.252		.285	.310	.077				9
10	.221	.207		.252		.276	.300	.060				10
11	.229	.214		.248		.272						11
12	.227	.205		.247		.271	.291	.010				12
13	.209	.215	.229	.242		.262	.282	.020				13
14	.213	.208	.222	.238		.265	.277	−.073				14
15	.206	.176	.192	.211		.217	.232	−.139				15
16	.175	.128	.130	.169		.084	−.147	.061				16
17						−.120	−.113	−.057				17
18	.142	.103	.123	.116		−.120	−.156	−.195				18
19	.124	.071	.082	−.034	−.135	−.192	−.180	−.241				19
20	.103	.050	.055	−.061	−.132	−.196	−.188	−.248				20
21	.065	.061	.057	−.061	−.176	−.198	−.187	−.246				21
22	.068	.065	.055	−.051	−.203	−.203	−.188	−.226				22
					α= − 9		δ= 2.5					
1	.780	.733	.797	.739		.544	.473	.382				1
2	.259	.360	.424	.446		.434	.338	.183				2
3	.235	.243	.289	.299		.364	.327	.142				3
4	.205	.217	.260	.289		.324	.307	.099				4
5	.197	.193	.229	.257		.296	.281	.071				5
6	.171	.178	.202	.232		.261	.251	.047				6
7	.164	.169	.192	.217		.238	.230	.026				7
8	.145	.150	.157	.191		.203	.215	.012				8
9	.147	.127	.140	.162		.190	.200	−.007				9
10	.147	.127		.159		.183	.194	−.039				10
11	.144	.140		.156		.178						11
12	.143	.130		.158		.177	.186	−.033				12
13	.145	.140	.141	.153		.174	.180	−.027				13
14	.144	.133	.137	.147		.173	.146	−.081				14
15	.127	.107	.115	.126		.133	−.111	−.153				15
16	.102	.067	.057	.092		.017	−.086	.044				16
17						−.084	−.016	−.110				17
18	.071	.043	.050	.051		.029	−.050	−.076				18
19	.046	.015	.020	−.021	−.005	−.066	−.058	−.128				19
20	.029	−.003	−.004	−.041	−.007	−.072	−.061	−.133				20
21	.013	.001	−.003	−.053	−.028	−.074	−.062	−.129				21
22	.013	.004	−.004	−.056	−.097	−.070	−.060	−.108				22
					α= − 6		δ= −18.5					
1	.811	.713	.790	.772		.674	.755	.842				1
2	.176	.255	.323	.367		.357	.375	.299				2
3	.166	.178	.214	.232		.264	.239	.066				3
4	.139	.144	.174	.203		.230	.230	.074				4
5	.128	.120	.145	.180		.202	.214	.042				5
6	.110	.109	.135	.158		.182	.197	.027				6
7	.100	.104	.119	.144		.157	.169	.016				7
8	.085	.088	.097	.118		.126	.150	.002				8
9	.086	.066	.080	.097		.116	.140	−.010				9
10	.079	.065		.095		.109	.128	−.029				10
11	.080	.076		.091		.103						11
12	.080	.068		.091		.103	.120	−.041				12
13	.081	.076	.080	.087		.097	.114	−.049				13
14	.079	.074	.076	.081		.099	.109	−.044				14
15	.069	.048	.057	.061		.068	.082	−.113				15
16	.042	.016	.013	.036		−.023	−.076	.121				16
17						−.061	−.029	−.115				17
18	.022	−.008	.003	−.005		.376	.466	.197				18
19	.005	−.034	−.024	−.012	.149	.394	.427	.199				19
20	−.011	−.054	−.049	−.061	.093	.359	.406	.216				20
21	−.045	−.047	−.048	−.124	.072	.324	.385	.178				21
22	−.041	−.045	−.049	−.146	.045	.301	.344	.152				22

Table 5 Continued

Pressure coefficients on swept wing

Configuration 6 M=2.01 R=3.6 x 10^6

Orif	Station 1	2	3	4	24	5	6	7	8	9	10	Orif
					α= - 6		δ= -11.7					
1	.821	.725	.798	.777		.675	.753	.836				1
2	.189	.261	.329	.362		.362	.377	.298				2
3	.171	.181	.219	.231		.266	.240	.062				3
4	.147	.144	.183	.202		.234	.236	.070				4
5	.135	.123	.146	.178		.206	.216	.037				5
6	.117	.116	.127	.160		.183	.196	.028				6
7	.108	.105	.118	.142		.163	.172	.017				7
8	.090	.092	.093	.118		.128	.155	.003				8
9	.090	.070	.076	.098		.117	.142	-.007				9
10	.089	.072		.093		.111	.131	-.027				10
11	.089	.081		.088		.106						11
12	.086	.073		.094		.105	.122	-.041				12
13	.085	.080	.076	.090		.101	.120	-.040				13
14	.083	.079	.073	.080		.103	.113	-.039				14
15	.075	.055	.054	.063		.070	.088	-.149				15
16	.046	.019	.008	.032		-.026	-.098	.065				16
17						-.082	-.080	-.098				17
18	.025	-.001	.003	.001		.205	.247	.126				18
19	.010	-.033	-.031	-.021	.047	.188	.191	.038				19
20	-.009	-.051	-.050	-.025	.019	.161	.182	.019				20
21	-.040	-.044	-.050	-.063	.000	.149	.171	-.004				21
22	-.035	-.040	-.054	-.115	-.017	.145	.159	.000				22
					α= - 6		δ= - 5.0					
1	.819	.723	.793	.774		.673	.755	.835				1
2	.187	.265	.331	.367		.361	.381	.298				2
3	.172	.184	.219	.233		.265	.240	.065				3
4	.149	.147	.184	.202		.235	.236	.072				4
5	.133	.121	.149	.179		.204	.213	.043				5
6	.116	.115	.133	.159		.188	.193	.030				6
7	.108	.105	.120	.143		.167	.168	.018				7
8	.093	.092	.095	.120		.137	.155	.000				8
9	.091	.070	.080	.098		.120	.145	-.008				9
10	.090	.072		.093		.115	.129	-.029				10
11	.090	.082		.092		.112						11
12	.085	.073		.093		.111	.124	-.040				12
13	.088	.082	.080	.087		.104	.119	-.040				13
14	.086	.080	.078	.080		.107	.108	-.041				14
15	.073	.055	.059	.063		.075	.083	-.151				15
16	.049	.024	.011	.032		-.022	-.106	.057				16
17						-.075	-.091	-.095				17
18	.024	-.001	.006	-.003		.080	.074	.013				18
19	.006	-.028	-.025	-.027	-.017	.030	.020	-.086				19
20	-.010	-.051	-.050	-.029	-.022	.009	.017	-.093				20
21	-.040	-.041	-.047	-.043	-.042	.007	.009	-.103				21
22	-.034	-.038	-.051	-.067	-.050	.001	.008	-.094				22
					α= - 6		δ= - 1.7					
1	.811	.714	.791	.768		.670	.747	.825				1
2	.178	.251	.323	.358		.357	.375	.291				2
3	.162	.173	.210	.225		.259	.239	.062				3
4	.136	.136	.173	.199		.230	.231	.070				4
5	.123	.113	.143	.174		.203	.213	.033				5
6	.105	.106	.127	.152		.180	.194	.020				6
7	.097	.099	.113	.136		.161	.166	.010				7
8	.083	.080	.089	.113		.127	.150	-.006				8
9	.083	.063	.072	.093		.113	.137	-.017				9
10	.081	.064		.090		.107	.125	-.036				10
11	.079	.074		.084		.102						11
12	.076	.066		.089		.104	.120	-.046				12
13	.078	.072	.074	.084		.098	.115	-.036				13
14	.078	.072	.070	.077		.097	.106	-.040				14
15	.067	.046	.053	.058		.067	.083	-.150				15
16	.040	.019	.003	.024		-.027	-.098	.056				16
17						-.065	-.083	-.085				17
18	.017	-.011	-.005	-.009		-.023	-.007	-.058				18
19	-.003	-.037	-.034	-.047	-.078	-.056	-.066	-.143				19
20	-.017	-.054	-.055	-.053	-.093	-.079	-.069	-.136				20
21	-.048	-.050	-.052	-.067	-.113	-.077	-.075	-.145				21
22	-.040	-.046	-.058	-.050	-.123	-.079	-.075	-.137				22

Table 5 Continued

Pressure coefficients on swept wing

Configuration 6 M= 2.01 R= 3.6 x 10^6

Orif	Station 1	2	3	4	24	5	6	7	8	9	10	Orif
					α= − 6		δ= 1.6					
1	.806	.713	.790	.769		.671	.747	.830				1
2	.174	.252	.319	.358		.353	.374	.291				2
3	.158	.169	.208	.224		.259	.235	.057				3
4	.134	.136	.172	.196		.227	.227	.065				4
5	.122	.112	.139	.170		.199	.205	.030				5
6	.105	.106	.120	.152		.179	.189	.020				6
7	.093	.093	.109	.132		.157	.163	.011				7
8	.084	.081	.084	.107		.125	.144	−.004				8
9	.082	.060	.069	.088		.111	.132	−.012				9
10	.078	.063		.085		.104	.118	−.033				10
11	.076	.069		.077		.097						11
12	.074	.062		.085		.099	.112	−.041				12
13	.077	.071	.069	.078		.092	.104	−.033				13
14	.075	.069	.067	.073		.093	.101	−.025				14
15	.062	.041	.047	.052		.064	.077	−.109				15
16	.032	.015	−.006	.023		−.035	−.095	.061				16
17						−.073	−.083	−.074				17
18	.015	−.012	−.006	−.013		−.039	−.050	−.077				18
19	−.006	−.040	−.038	−.066	−.073	−.097	−.092	−.136				19
20	−.021	−.059	−.058	−.075	−.076	−.112	−.099	−.123				20
21	−.048	−.054	−.058	−.085	−.091	−.109	−.107	−.120				21
22	−.041	−.051	−.061	−.082	−.131	−.109	−.101	−.115				22
					α= − 6		δ= 5.0					
1	.812	.717	.795	.768		.668	.752	.828				1
2	.178	.256	.327	.360		.356	.374	.292				2
3	.161	.175	.216	.225		.260	.236	.062				3
4	.138	.141	.177	.198		.228	.229	.069				4
5	.127	.118	.146	.174		.200	.209	.035				5
6	.106	.110	.124	.154		.178	.189	.020				6
7	.097	.099	.112	.135		.159	.165	.013				7
8	.083	.085	.090	.113		.129	.149	−.007				8
9	.083	.067	.073	.091		.113	.136	−.013				9
10	.081	.068		.090		.107	.124	−.032				10
11	.079	.077		.081		.103						11
12	.075	.068		.088		.103	.119	−.045				12
13	.080	.078	.075	.083		.097	.112	−.040				13
14	.079	.075	.069	.077		.098	.107	−.039				14
15	.067	.049	.050	.055		.066	.078	−.145				15
16	.037	.023	.003	.026		−.029	−.099	.052				16
17						−.078	−.080	−.077				17
18	.018	−.006	−.004	−.009		−.048	−.071	−.103				18
19	−.003	−.033	−.033	−.073	−.081	−.117	−.109	−.155				19
20	−.015	−.050	−.054	−.087	−.084	−.129	−.115	−.147				20
21	−.044	−.044	−.053	−.092	−.098	−.128	−.119	−.140				21
22	−.037	−.041	−.055	−.096	−.147	−.144	−.119	−.124				22
					α= − 6		δ= 8.4					
1	.811	.714	.790	.767		.669	.749	.827				1
2	.179	.254	.325	.360		.354	.375	.292				2
3	.161	.174	.215	.227		.262	.237	.063				3
4	.138	.138	.176	.198		.230	.233	.070				4
5	.127	.117	.144	.174		.204	.211	.034				5
6	.106	.110	.128	.155		.180	.192	.022				6
7	.099	.099	.111	.138		.159	.165	.011				7
8	.084	.083	.091	.113		.130	.151	−.005				8
9	.084	.064	.073	.090		.117	.138	−.014				9
10	.082	.066		.089		.109	.124	−.035				10
11	.080	.076		.084		.105						11
12	.078	.067		.088		.106	.119	−.046				12
13	.081	.076	.075	.082		.099	.111	−.045				13
14	.079	.073	.070	.076		.101	.102	−.040				14
15	.069	.048	.054	.058		.067	.078	−.147				15
16	.039	.022	.005	.025		−.026	−.097	.059				16
17						−.071	−.076	−.075				17
18	.018	−.006	−.003	−.011		−.068	−.096	−.118				18
19	−.001	−.033	−.033	−.084	−.095	−.140	−.132	−.164				19
20	−.014	−.051	−.051	−.099	−.095	−.147	−.139	−.158				20
21	−.044	−.045	−.052	−.104	−.117	−.147	−.144	−.143				21
22	−.036	−.043	−.057	−.105	−.156	−.153	−.142	−.133				22

Table 5 Continued

Pressure coefficients on swept wing

Configuration 6 M= 2.01 R= 3.6 x 10^6

Orif	Station 1	2	3	4	24	5	6	7	8	9	10	Orif
					α= - 6		δ= 15.1					
1	.812	.714	.792	.770		.670	.755	.821				1
2	.181	.255	.325	.362		.357	.378	.292				2
3	.162	.174	.211	.229		.260	.239	.063				3
4	.141	.139	.176	.200		.231	.235	.072				4
5	.127	.118	.147	.177		.204	.214	.036				5
6	.107	.110	.129	.156		.183	.193	.018				6
7	.100	.100	.115	.141		.162	.167	.011				7
8	.084	.085	.091	.116		.127	.149	-.008				8
9	.085	.065	.077	.093		.115	.136	-.015				9
10	.083	.066		.091		.108	.122	-.033				10
11	.080	.076		.086		.104						11
12	.077	.067		.090		.105	.118	-.044				12
13	.082	.077	.078	.082		.098	.111	-.040				13
14	.079	.073	.073	.077		.100	.104	-.041				14
15	.068	.047	.056	.060		.069	.082	-.151				15
16	.038	.024	.006	.032		-.025	-.075	.056				16
17						-.061	-.051	-.071				17
18	.020	-.007	-.002	-.007		-.104	-.143	-.156				18
19	-.002	-.034	-.031	-.094	-.117	-.180	-.174	-.183				19
20	-.016	-.051	-.052	-.116	-.120	-.185	-.181	-.172				20
21	-.042	-.047	-.051	-.119	-.147	-.186	-.183	-.162				21
22	-.039	-.043	-.054	-.117	-.174	-.188	-.179	-.154				22
					α= - 6		δ= 21.8					
1	.814	.714	.789	.768		.669	.754	.821				1
2	.180	.255	.328	.362		.359	.381	.295				2
3	.164	.174	.214	.227		.266	.243	.064				3
4	.141	.142	.179	.200		.231	.238	.075				4
5	.129	.118	.147	.176		.204	.217	.036				5
6	.106	.110	.129	.156		.180	.198	.020				6
7	.099	.101	.116	.140		.161	.173	.012				7
8	.085	.086	.093	.118		.132	.153	-.004				8
9	.087	.067	.077	.093		.117	.143	-.013				9
10	.084	.067		.092		.110	.127	-.033				10
11	.082	.078		.084		.105						11
12	.079	.070		.090		.107	.123	-.047				12
13	.084	.079	.078	.084		.100	.117	-.040				13
14	.082	.076	.074	.079		.102	.110	-.041				14
15	.070	.051	.057	.061		.071	.085	-.148				15
16	.040	.029	.007	.036		-.011	-.004	.074				16
17						-.033	.012	-.073				17
18	.021	-.004	-.003	-.005		-.146	-.186	-.189				18
19	.002	-.034	-.031	-.106	-.146	-.217	-.209	-.208				19
20	-.013	-.050	-.053	-.133	-.155	-.220	-.218	-.197				20
21	-.043	-.045	-.050	-.134	-.176	-.221	-.220	-.196				21
22	-.037	-.041	-.054	-.128	-.194	-.225	-.209	-.194				22
					α= - 3		δ= 0.7					
1	.820	.702	.801	.762		.735	.719	.883				1
2	.114	.167	.215	.242		.251	.278	.222				2
3	.099	.105	.156	.174		.188	.184	.012				3
4	.082	.070	.103	.126		.147	.129	.015				4
5	.070	.048	.074	.099		.117	.123	.011				5
6	.050	.047	.055	.079		.099	.108	.010				6
7	.042	.039	.045	.065		.088	.087	.011				7
8	.034	.027	.022	.041		.059	.070	-.002				8
9	.033	.007	.011	.024		.046	.061	.000				9
10	.028	.009		.022		.039	.047	-.021				10
11	.026	.019		.017		.035						11
12	.025	.009		.020		.035	.045	-.034				12
13	.027	.020	.015	.018		.029	.040	-.020				13
14	.026	.016	.014	.017		.033	.036	.048				14
15	.013	-.005	-.002	-.001		.004	.013	-.065				15
16	-.012	-.018	-.041	-.022		-.065	-.067	.113				16
17						-.058	-.068	-.035				17
18	-.024	-.051	-.051	-.070		-.040	-.069	-.072				18
19	-.044	-.076	-.079	-.099	-.070	-.110	-.099	-.088				19
20	-.058	-.093	-.095	-.114	-.075	-.116	-.103	-.094				20
21	-.086	-.091	-.097	-.120	-.085	-.118	-.105	-.092				21
22	-.078	-.086	-.097	-.119	-.109	-.112	-.107	-.078				22

Table 5 Continued

Pressure coefficients on swept wing

Configuration 6 M=2.01 R=3.5 x 10^6

Orif	Station 1	2	3	4	24	5	6	7	8	9	10	Orif
					α= 0		δ= -20.3					
1	.845	.682	.782	.734		.771	.662	.867				1
2	.074	.093	.125	.136		.135	.142	.097				2
3	.041	.049	.097	.101		.100	.117	.014				3
4	.040	.020	.043	.057		.071	.065	.005				4
5	.029	-.002	.013	.037		.053	.050	.012				5
6	.008	-.007	-.004	.018		.036	.033	.004				6
7	.003	-.009	-.013	.001		.020	.017	.011				7
8	-.003	-.018	-.029	-.013		.000	.010	-.003				8
9	-.011	-.033	-.043	-.034		-.013	.003	.001				9
10	-.013	-.033		-.033		-.018	-.006	-.018				10
11	-.014	-.023		-.040		-.022						11
12	-.014	-.032		-.038		-.021	-.011	-.028				12
13	-.016	-.023	-.036	-.040		-.025	-.015	.004				13
14	-.013	-.022	-.035	-.038		-.023	-.020	.103				14
15	-.023	-.041	-.050	-.053		-.043	-.036	.035				15
16	-.041	-.053	-.081	-.063		-.051	-.015	.232				16
17						-.036	.000	-.090				17
18	-.060	-.087	-.092	-.065		.091	.152	.143				18
19	-.074	-.109	-.115	-.112	.063	.263	.271	.165				19
20	-.082	-.124	-.131	-.173	-.001	.252	.276	.147				20
21	-.120	-.121	-.133	-.191	-.011	.240	.268	.125				21
22	-.100	-.116	-.132	-.167	-.032	.238	.247	.110				22
					α= 0		δ= -13.7					
1	.838	.676	.787	.736		.774	.662	.868				1
2	.070	.090	.123	.137		.141	.142	.098				2
3	.038	.048	.095	.105		.105	.118	.013				3
4	.037	.019	.047	.058		.080	.064	.004				4
5	.025	-.002	.013	.040		.058	.048	.013				5
6	.008	-.006	-.001	.020		.040	.038	.005				6
7	.001	-.011	-.013	.005		.024	.020	.012				7
8	-.003	-.017	-.029	-.011		.001	.012	-.004				8
9	-.010	-.034	-.040	-.029		-.011	.006	-.001				9
10	-.014	-.033		-.030		-.017	-.005	-.015				10
11	-.016	-.023		-.036		-.021						11
12	-.017	-.031		-.033		-.021	-.009	-.025				12
13	-.016	-.020	-.033	-.037		-.024	-.013	.000				13
14	-.015	-.025	-.033	-.038		-.023	-.017	.104				14
15	-.024	-.042	-.046	-.047		-.046	-.033	-.022				15
16	-.045	-.051	-.080	-.065		-.071	-.054	.174				16
17						-.056	-.053	-.073				17
18	-.063	-.087	-.092	-.093		.028	.086	.082				18
19	-.077	-.110	-.113	-.110	-.033	.093	.097	.050				19
20	-.084	-.126	-.128	-.141	-.072	.079	.094	.037				20
21	-.120	-.121	-.130	-.159	-.086	.074	.085	.016				21
22	-.101	-.117	-.128	-.146	-.098	.071	.079	.001				22
					α= 0		δ= - 7.1					
1	.842	.682	.785	.736		.772	.660	.868				1
2	.073	.092	.125	.139		.140	.144	.102				2
3	.040	.048	.096	.106		.104	.119	.014				3
4	.039	.019	.044	.060		.078	.063	.005				4
5	.027	-.002	.015	.041		.057	.051	.014				5
6	.008	-.008	-.004	.019		.040	.037	.007				6
7	.004	-.009	-.015	.005		.024	.023	.012				7
8	-.001	-.017	-.028	-.012		.003	.013	-.003				8
9	-.007	-.032	-.041	-.030		-.012	.007	.002				9
10	-.012	-.032		-.029		-.014	-.004	-.017				10
11	-.015	-.023		-.034		-.020						11
12	-.015	-.031		-.030		-.019	-.008	-.021				12
13	-.015	-.022	-.034	-.037		-.024	-.014	.002				13
14	-.013	-.022	-.035	-.036		-.022	-.015	.101				14
15	-.022	-.041	-.047	-.048		-.043	-.034	-.037				15
16	-.046	-.048	-.083	-.061		-.082	-.067	.132				16
17						-.054	-.067	-.054				17
18	-.061	-.086	-.090	-.101		-.041	-.002	-.005				18
19	-.074	-.110	-.113	-.113	-.105	-.040	-.042	-.027				19
20	-.082	-.124	-.126	-.120	-.128	-.055	-.046	-.036				20
21	-.117	-.122	-.129	-.139	-.140	-.058	-.053	-.055				21
22	-.098	-.116	-.129	-.132	-.146	-.056	-.055	-.078				22

Table 5 Continued

Pressure coefficients on swept wing

Configuration 6 M=2.01 R=3.6 x 10^6

Orif	Station 1	2	3	4	24	5	6	7	8	9	10	Orif
					α= 0		δ= - 3.8					
1	.842	.679	.788	.738		.771	.664	.869				1
2	.074	.092	.126	.138		.142	.146	.102				2
3	.041	.051	.097	.107		.105	.118	.014				3
4	.040	.024	.048	.062		.078	.066	.005				4
5	.026	-.001	.015	.040		.059	.051	.015				5
6	.010	-.005	.000	.025		.040	.038	.009				6
7	.004	-.007	-.010	.005		.026	.023	.010				7
8	-.001	-.017	-.026	-.010		.003	.013	.000				8
9	-.008	-.030	-.040	-.027		-.012	.007	.000				9
10	-.011	-.030		-.028		-.019	-.004	-.019				10
11	-.014	-.020		-.032		-.020						11
12	-.016	-.027		-.029		-.019	-.008	-.024				12
13	-.014	-.020	-.032	-.035		-.024	-.013	.005				13
14	-.013	-.019	-.031	-.034		-.022	-.021	.104				14
15	-.020	-.040	-.047	-.049		-.043	-.032	-.039				15
16	-.043	-.045	-.081	-.063		-.079	-.061	.116				16
17						-.045	-.061	-.035				17
18	-.060	-.084	-.091	-.097		-.107	-.071	-.074				18
19	-.074	-.107	-.111	-.118	-.144	-.118	-.122	-.088				19
20	-.084	-.120	-.126	-.130	-.164	-.137	-.129	-.103				20
21	-.115	-.119	-.129	-.140	-.167	-.138	-.134	-.107				21
22	-.098	-.116	-.126	-.125	-.175	-.145	-.128	-.126				22
					α= 0		δ= - 0.5					
1	.843	.681	.788	.734		.768	.665	.876				1
2	.072	.093	.130	.136		.138	.147	.105				2
3	.040	.051	.099	.101		.103	.121	.017				3
4	.040	.022	.047	.055		.075	.067	.011				4
5	.027	.001	.013	.037		.055	.052	.018				5
6	.009	-.003	-.004	.018		.039	.040	.012				6
7	.003	-.006	-.013	.002		.022	.024	.016				7
8	-.001	-.016	-.029	-.014		.004	.015	.003				8
9	-.005	-.032	-.042	-.033		-.008	.012	.006				9
10	-.011	-.030		-.031		-.013	.000	-.013				10
11	-.012	-.022		-.038		-.019						11
12	-.014	-.026		-.034		-.017	-.006	-.019				12
13	-.013	-.019	-.034	-.039		-.022	-.012	.003				13
14	-.012	-.019	-.035	-.038		-.021	-.013	.104				14
15	-.020	-.040	-.048	-.050		-.042	-.029	-.040				15
16	-.044	-.045	-.084	-.065		-.080	-.067	.114				16
17						-.067	-.063	-.025				17
18	-.060	-.085	-.095	-.101		-.081	-.081	-.074				18
19	-.074	-.107	-.116	-.120	-.120	-.132	-.124	-.079				19
20	-.081	-.121	-.128	-.136	-.132	-.138	-.129	-.097				20
21	-.113	-.119	-.129	-.141	-.143	-.140	-.134	-.105				21
22	-.094	-.114	-.130	-.131	-.134	-.147	-.134	-.099				22
					α= 0		δ= 2.9					
1	.841	.682	.785	.735		.775	.667	.874				1
2	.069	.090	.124	.136		.141	.146	.104				2
3	.040	.049	.096	.105		.105	.119	.017				3
4	.036	.018	.045	.059		.078	.067	.006				4
5	.026	-.001	.015	.042		.058	.053	.016				5
6	.005	-.006	-.001	.022		.040	.040	.011				6
7	.001	-.010	-.011	.006		.028	.025	.013				7
8	-.004	-.018	-.026	-.009		.004	.016	.002				8
9	-.009	-.032	-.040	-.028		-.011	.009	.003				9
10	-.014	-.034		-.029		-.016	.001	-.014				10
11	-.016	-.022		-.034		-.022						11
12	-.016	-.029		-.032		-.020	-.004	-.020				12
13	-.016	-.022	-.032	-.035		-.025	-.011	.008				13
14	-.015	-.021	-.032	-.034		-.022	-.014	.105				14
15	-.023	-.042	-.046	-.048		-.046	-.031	-.040				15
16	-.047	-.047	-.080	-.067		-.078	-.064	.113				16
17						-.065	-.059	-.015				17
18	-.063	-.084	-.088	-.097		-.097	-.107	-.088				18
19	-.077	-.108	-.112	-.121	-.121	-.152	-.147	-.091				19
20	-.086	-.124	-.128	-.144	-.137	-.160	-.152	-.117				20
21	-.115	-.121	-.127	-.148	-.145	-.163	-.155	-.132				21
22	-.097	-.117	-.127	-.134	-.140	-.174	-.156	-.118				22

Table 5 Continued

Pressure coefficients on swept wing

Configuration 6 M=2.01 R=3.6 x 10^6

Orif	Station 1	2	3	4	24	5	6	7	8	9	10	Orif
					α= 0		δ= 6.1					
1	.843	.680	.786	.736		.771	.669	.875				1
2	.072	.093	.127	.137		.140	.147	.104				2
3	.040	.050	.098	.104		.104	.120	.016				3
4	.038	.020	.048	.060		.078	.067	.009				4
5	.027	-.001	.014	.040		.058	.052	.014				5
6	.008	-.005	-.006	.021		.040	.039	.009				6
7	.005	-.008	-.013	.006		.025	.022	.013				7
8	.001	-.017	-.027	-.012		.006	.015	.002				8
9	-.008	-.032	-.041	-.030		-.009	.008	.002				9
10	-.013	-.032		-.032		-.014	-.001	-.016				10
11	-.014	-.022		-.033		-.020						11
12	-.015	-.029		-.032		-.019	-.005	-.022				12
13	-.014	-.021	-.031	-.036		-.022	-.012	.003				13
14	-.013	-.019	-.033	-.036		-.020	-.016	.099				14
15	-.021	-.040	-.046	-.048		-.042	-.031	-.043				15
16	-.044	-.045	-.084	-.066		-.072	-.056	.110				16
17						-.061	-.054	-.011				17
18	-.059	-.083	-.091	-.095		-.112	-.124	-.110				18
19	-.076	-.107	-.112	-.129	-.127	-.170	-.160	-.118				19
20	-.084	-.124	-.128	-.150	-.147	-.174	-.167	-.153				20
21	-.115	-.120	-.129	-.157	-.151	-.177	-.170	-.163				21
22	-.098	-.115	-.131	-.143	-.150	-.187	-.172	-.148				22
					α= 0		δ= 12.8					
1	.843	.683	.789	.735		.773	.668	.878				1
2	.072	.094	.129	.139		.143	.147	.106				2
3	.041	.052	.099	.104		.106	.119	.015				3
4	.040	.020	.050	.060		.079	.067	.007				4
5	.027	-.002	.016	.041		.058	.053	.016				5
6	.009	-.003	.000	.020		.040	.040	.009				6
7	.006	-.006	-.011	.004		.027	.025	.011				7
8	.001	-.016	-.028	-.010		.007	.014	-.001				8
9	-.008	-.031	-.039	-.029		-.013	.008	.004				9
10	-.011	-.030		-.029		-.014	-.001	-.014				10
11	-.013	-.021		-.035		-.021						11
12	-.013	-.027		-.032		-.018	-.008	-.020				12
13	-.011	-.020	-.031	-.037		-.022	-.011	.007				13
14	-.014	-.019	-.031	-.037		-.020	-.016	.101				14
15	-.022	-.040	-.046	-.048		-.045	-.029	-.037				15
16	-.043	-.043	-.081	-.064		-.049	-.028	.125				16
17						-.041	-.027	.013				17
18	-.061	-.083	-.090	-.080		-.155	-.178	-.160				18
19	-.075	-.107	-.111	-.147	-.159	-.217	-.210	-.185				19
20	-.085	-.120	-.127	-.174	-.174	-.223	-.216	-.218				20
21	-.114	-.118	-.128	-.174	-.174	-.223	-.218	-.222				21
22	-.100	-.113	-.129	-.151	-.190	-.228	-.210	-.216				22
					α= 0		δ= 19.4					
1	.841	.681	.783	.737		.773	.672	.880				1
2	.069	.091	.126	.140		.147	.152	.111				2
3	.040	.049	.097	.107		.107	.121	.014				3
4	.036	.018	.046	.061		.078	.069	.011				4
5	.025	-.002	.016	.044		.060	.054	.018				5
6	.006	-.006	.002	.022		.043	.041	.010				6
7	.002	-.008	-.010	.007		.029	.027	.014				7
8	-.001	-.017	-.024	-.010		.008	.018	-.001				8
9	-.009	-.032	-.038	-.028		-.009	.011	.003				9
10	-.013	-.032		-.028		-.014	.001	-.015				10
11	-.015	-.022		-.033		-.016						11
12	-.016	-.030		-.031		-.017	-.003	-.021				12
13	-.014	-.021	-.030	-.034		-.023	-.009	.009				13
14	-.014	-.019	-.029	-.034		-.021	-.013	.100				14
15	-.022	-.041	-.043	-.046		-.043	-.020	-.027				15
16	-.046	-.043	-.077	-.058		-.018	.041	.146				16
17						-.013	.049	.011				17
18	-.062	-.085	-.088	-.061		-.193	-.218	-.185				18
19	-.076	-.106	-.110	-.159	-.190	-.250	-.242	-.228				19
20	-.084	-.122	-.126	-.186	-.196	-.251	-.246	-.245				20
21	-.116	-.120	-.125	-.184	-.195	-.251	-.244	-.249				21
22	-.099	-.116	-.127	-.159	-.218	-.248	-.216	-.247				22

Table 5 Continued

Pressure coefficients on swept wing

Configuration 6 M= 2.01 R= 3.6 x 10^6

Orif	Station 1	2	3	4	24	5	6	7	8	9	10	Orif
					α= 3		δ= - 1.1					
1	.871	.678	.798	.719		.798	.604	.856				1
2	.045	.036	.053	.055		.062	.067	.048				2
3	.009	.007	.034	.041		.039	.056	.027				3
4	.009	-.020	-.003	.008		.019	.025	.015				4
5	-.003	-.037	-.026	-.012		.004	.008	.006				5
6	-.018	-.044	-.040	-.018		-.007	-.014	-.009				6
7	-.024	-.047	-.049	-.031		-.019	-.025	-.001				7
8	-.024	-.050	-.062	-.046		-.037	-.024	-.008				8
9	-.038	-.066	-.075	-.065		-.047	-.031	-.010				9
10	-.040	-.063		-.058		-.048	-.037	-.028				10
11	-.042	-.056		-.062		-.048						11
12	-.044	-.058		-.063		-.051	-.036	-.044				12
13	-.043	-.049	-.060	-.067		-.051	-.041	-.036				13
14	-.043	-.050	-.064	-.066		-.052	-.048	.089				14
15	-.049	-.067	-.072	-.074		-.073	-.053	-.093				15
16	-.067	-.073	-.102	-.093		-.070	-.077	.094				16
17						-.087	-.071	-.049				17
18	-.085	-.109	-.118	-.107		-.071	-.096	-.075				18
19	-.093	-.125	-.131	-.128	-.095	-.133	-.125	-.108				19
20	-.100	-.142	-.144	-.158	-.094	-.141	-.129	-.108				20
21	-.142	-.136	-.144	-.153	-.108	-.142	-.135	-.109				21
22	-.111	-.126	-.142	-.153	-.130	-.149	-.135	-.108				22
					α= 6		δ= -20.9					
1	.888	.608	.711	.607		.811	.446	.912				1
2	-.012	-.064	-.053	-.055		-.053	-.052	-.019				2
3	-.062	-.081	-.063	-.056		-.065	-.055	-.027				3
4	-.056	-.112	-.092	-.078		-.084	-.086	-.060				4
5	-.066	-.114	-.105	-.091		-.085	-.091	-.063				5
6	-.072	-.109	-.116	-.099		-.094	-.102	-.070				6
7	-.077	-.110	-.124	-.108		-.104	-.113	-.071				7
8	-.077	-.113	-.137	-.120		-.120	-.122	-.089				8
9	-.087	-.120	-.147	-.135		-.129	-.127	-.094				9
10	-.094	-.118		-.134		-.132	-.132	-.112				10
11	-.097	-.109		-.137		-.132						11
12	-.096	-.111		-.136		-.130	-.132	-.190				12
13	-.097	-.107	-.129	-.136		-.134	-.132	-.149				13
14	-.096	-.106	-.128	-.137		-.134	-.134	-.110				14
15	-.101	-.120	-.136	-.147		-.142	-.107	-.174				15
16	-.116	-.120	-.154	-.149		-.052	-.035	.054				16
17						-.051	-.025	-.145				17
18	-.132	-.154	-.165	-.128		-.041	-.004	-.052				18
19	-.146	-.172	-.187	-.182	-.078	.049	.055	-.132				19
20	-.145	-.186	-.198	-.219	-.107	.058	.070	-.121				20
21	-.178	-.182	-.189	-.222	-.120	.060	.077	-.105				21
22	-.134	-.137	-.182	-.239	-.124	.057	.084	-.057				22
					α= 6		δ= -14.5					
1	.886	.604	.707	.611		.810	.450	.908				1
2	-.013	-.061	-.055	-.048		-.059	-.045	-.018				2
3	-.063	-.078	-.065	-.052		-.063	-.051	-.026				3
4	-.058	-.111	-.093	-.080		-.080	-.082	-.062				4
5	-.067	-.114	-.108	-.091		-.084	-.089	-.062				5
6	-.076	-.108	-.116	-.101		-.091	-.094	-.064				6
7	-.080	-.110	-.126	-.109		-.102	-.106	-.067				7
8	-.079	-.111	-.136	-.121		-.120	-.117	-.082				8
9	-.092	-.119	-.145	-.133		-.121	-.120	-.085				9
10	-.093	-.114		-.131		-.124	-.127	-.111				10
11	-.097	-.107		-.139		-.127						11
12	-.098	-.112		-.135		-.123	-.124	-.191				12
13	-.098	-.105	-.132	-.137		-.128	-.124	-.143				13
14	-.099	-.105	-.128	-.137		-.127	-.126	-.101				14
15	-.104	-.121	-.133	-.147		-.141	-.124	-.179				15
16	-.119	-.119	-.152	-.154		-.098	-.080	.048				16
17						-.081	-.073	-.142				17
18	-.134	-.152	-.165	-.152		-.087	-.071	-.085				18
19	-.147	-.174	-.179	-.175	-.136	-.066	-.065	-.167				19
20	-.146	-.184	-.189	-.225	-.156	-.068	-.062	-.167				20
21	-.178	-.182	-.188	-.221	-.172	-.066	-.063	-.148				21
22	-.136	-.137	-.174	-.238	-.166	-.069	-.056	-.127				22

Table 5 Continued

Pressure coefficients on swept wing

Configuration 6 M=2.01 R=3.6 x 10^6

Orif	Station 1	2	3	4	24	5	6	7	8	9	10	Orif
					α= 6		δ= - 8.2					
1	.886	.605	.709	.611		.807	.451	.913				1
2	-.010	-.063	-.051	-.051		-.058	-.050	-.014				2
3	-.062	-.084	-.064	-.055		-.065	-.054	-.023				3
4	-.058	-.115	-.093	-.086		-.079	-.084	-.059				4
5	-.066	-.116	-.106	-.094		-.085	-.086	-.064				5
6	-.076	-.110	-.118	-.105		-.093	-.093	-.067				6
7	-.080	-.113	-.125	-.111		-.104	-.106	-.072				7
8	-.077	-.115	-.136	-.122		-.120	-.118	-.082				8
9	-.093	-.122	-.146	-.136		-.125	-.121	-.090				9
10	-.093	-.120		-.133		-.130	-.126	-.107				10
11	-.096	-.112		-.137		-.132						11
12	-.095	-.115		-.138		-.130	-.126	-.188				12
13	-.097	-.110	-.130	-.137		-.131	-.127	-.143				13
14	-.097	-.110	-.131	-.139		-.132	-.130	-.099				14
15	-.101	-.120	-.137	-.148		-.149	-.130	-.186				15
16	-.118	-.120	-.154	-.159		-.112	-.091	.042				16
17						-.081	-.081	-.147				17
18	-.134	-.155	-.167	-.160		-.105	-.101	-.109				18
19	-.146	-.174	-.184	-.178	-.149	-.107	-.109	-.186				19
20	-.146	-.187	-.193	-.223	-.174	-.118	-.111	-.186				20
21	-.176	-.184	-.192	-.228	-.184	-.119	-.110	-.165				21
22	-.135	-.140	-.182	-.225	-.176	-.111	-.107	-.147				22
					α= 6		δ= - 5.0					
1	.891	.609	.708	.605		.806	.451	.909				1
2	-.009	-.062	-.052	-.059		-.060	-.053	-.012				2
3	-.061	-.082	-.062	-.063		-.070	-.056	-.020				3
4	-.057	-.114	-.089	-.092		-.083	-.086	-.053				4
5	-.064	-.112	-.114	-.100		-.087	-.093	-.057				5
6	-.074	-.111	-.123	-.109		-.094	-.102	-.065				6
7	-.079	-.110	-.130	-.114		-.108	-.111	-.068				7
8	-.078	-.113	-.143	-.128		-.122	-.121	-.083				8
9	-.088	-.120	-.150	-.142		-.130	-.125	-.086				9
10	-.089	-.118		-.141		-.133	-.130	-.105				10
11	-.093	-.110		-.143		-.134						11
12	-.095	-.113		-.140		-.133	-.130	-.188				12
13	-.097	-.108	-.136	-.140		-.135	-.131	-.182				13
14	-.094	-.106	-.132	-.145		-.134	-.132	-.096				14
15	-.100	-.120	-.139	-.155		-.149	-.128	-.183				15
16	-.114	-.119	-.160	-.165		-.109	-.091	.045				16
17						-.069	-.082	-.144				17
18	-.133	-.151	-.169	-.166		-.163	-.134	-.144				18
19	-.143	-.173	-.185	-.194	-.199	-.159	-.161	-.210				19
20	-.146	-.187	-.198	-.228	-.211	-.173	-.161	-.210				20
21	-.175	-.182	-.197	-.233	-.214	-.170	-.160	-.199				21
22	-.133	-.135	-.186	-.219	-.211	-.163	-.141	-.180				22
					α= 6		δ= - 1.8					
1	.896	.612	.712	.619		.812	.458	.914				1
2	.001	-.046	-.025	-.032		-.028	-.031	.000				2
3	-.048	-.067	-.040	-.040		-.040	-.034	-.012				3
4	-.046	-.094	-.076	-.063		-.060	-.057	-.036				4
5	-.055	-.099	-.095	-.070		-.064	-.067	-.042				5
6	-.066	-.098	-.100	-.082		-.074	-.080	-.053				6
7	-.068	-.097	-.107	-.091		-.086	-.087	-.050				7
8	-.072	-.101	-.119	-.102		-.099	-.092	-.059				8
9	-.080	-.106	-.128	-.119		-.105	-.093	-.063				9
10	-.086	-.108		-.113		-.107	-.099	-.082				10
11	-.091	-.098		-.115		-.106						11
12	-.090	-.100		-.115		-.105	-.100	-.135				12
13	-.088	-.095	-.117	-.120		-.107	-.103	-.149				13
14	-.088	-.095	-.112	-.120		-.108	-.111	-.052				14
15	-.093	-.104	-.117	-.128		-.126	-.108	-.147				15
16	-.107	-.103	-.138	-.140		-.101	-.088	.056				16
17						-.088	-.084	-.107				17
18	-.124	-.139	-.149	-.142		-.108	-.126	-.115				18
19	-.131	-.158	-.167	-.168	-.132	-.155	-.150	-.159				19
20	-.135	-.169	-.177	-.197	-.137	-.167	-.155	-.159				20
21	-.167	-.165	-.174	-.200	-.147	-.170	-.155	-.157				21
22	-.132	-.130	-.168	-.174	-.149	-.170	-.154	-.146				22

Table 5 Continued

Pressure coefficients on swept wing

Configuration 6 M=2.01 R=3.6 x 10^6

Orif	Station 1	2	3	4	24	5	6	7	8	9	10	Orif
					α= 6		δ= 1.3					
1	.896	.627	.727	.615		.807	.446	.907				1
2	.010	-.036	-.025	-.042		-.046	-.046	-.013				2
3	-.038	-.058	-.038	-.046		-.056	-.050	-.021				3
4	-.039	-.087	-.068	-.075		-.071	-.072	-.050				4
5	-.044	-.093	-.104	-.084		-.078	-.082	-.055				5
6	-.054	-.087	-.112	-.094		-.086	-.096	-.062				6
7	-.060	-.085	-.120	-.101		-.100	-.104	-.063				7
8	-.060	-.087	-.125	-.116		-.117	-.113	-.074				8
9	-.072	-.098	-.137	-.126		-.123	-.113	-.078				9
10	-.075	-.095		-.124		-.123	-.116	-.099				10
11	-.078	-.087		-.127		-.125						11
12	-.078	-.089		-.129		-.123	-.116	-.166				12
13	-.077	-.084	-.125	-.130		-.125	-.120	-.168				13
14	-.071	-.081	-.123	-.129		-.128	-.122	-.073				14
15	-.080	-.094	-.130	-.139		-.139	-.121	-.159				15
16	-.094	-.096	-.148	-.149		-.112	-.091	.045				16
17						-.092	-.085	-.126				17
18	-.109	-.129	-.158	-.151		-.133	-.149	-.138				18
19	-.121	-.148	-.175	-.195	-.150	-.182	-.174	-.182				19
20	-.122	-.164	-.185	-.214	-.156	-.189	-.178	-.182				20
21	-.156	-.158	-.182	-.213	-.165	-.187	-.180	-.175				21
22	-.119	-.116	-.177	-.186	-.162	-.191	-.173	-.166				22
					α= 6		δ= 4.5					
1	.887	.606	.705	.612		.813	.450	.910				1
2	-.012	-.063	-.053	-.047		-.051	-.050	-.012				2
3	-.060	-.083	-.062	-.054		-.063	-.050	-.023				3
4	-.057	-.112	-.091	-.085		-.078	-.083	-.056				4
5	-.064	-.113	-.104	-.087		-.084	-.088	-.055				5
6	-.074	-.109	-.113	-.098		-.092	-.099	-.062				6
7	-.079	-.111	-.120	-.107		-.104	-.109	-.065				7
8	-.080	-.114	-.128	-.124		-.115	-.116	-.076				8
9	-.093	-.120	-.145	-.132		-.122	-.120	-.079				9
10	-.093	-.116		-.132		-.122	-.126	-.100				10
11	-.098	-.112		-.134		-.123						11
12	-.098	-.113		-.134		-.122	-.126	-.174				12
13	-.098	-.109	-.129	-.136		-.122	-.128	-.181				13
14	-.097	-.106	-.126	-.136		-.123	-.130	-.091				14
15	-.102	-.119	-.134	-.147		-.140	-.131	-.175				15
16	-.117	-.120	-.147	-.153		-.102	-.088	.044				16
17						-.078	-.076	-.143				17
18	-.131	-.152	-.160	-.153		-.149	-.167	-.170				18
19	-.145	-.171	-.178	-.206	-.171	-.202	-.195	-.206				19
20	-.146	-.184	-.190	-.219	-.172	-.207	-.200	-.204				20
21	-.176	-.181	-.188	-.219	-.177	-.209	-.202	-.197				21
22	-.136	-.139	-.175	-.195	-.176	-.217	-.181	-.192				22
					α= 6		δ= 10.9					
1	.892	.609	.711	.614		.809	.452	.908				1
2	-.010	-.061	-.050	-.047		-.051	-.050	-.012				2
3	-.058	-.080	-.061	-.052		-.063	-.050	-.024				3
4	-.055	-.113	-.090	-.081		-.078	-.081	-.056				4
5	-.063	-.116	-.104	-.091		-.084	-.089	-.058				5
6	-.070	-.108	-.113	-.099		-.094	-.094	-.063				6
7	-.077	-.110	-.121	-.110		-.102	-.109	-.067				7
8	-.078	-.112	-.136	-.122		-.118	-.117	-.080				8
9	-.087	-.120	-.144	-.138		-.122	-.120	-.081				9
10	-.092	-.114		-.135		-.125	-.124	-.106				10
11	-.095	-.110		-.136		-.128						11
12	-.094	-.111		-.137		-.125	-.121	-.181				12
13	-.096	-.107	-.128	-.138		-.126	-.123	-.182				13
14	-.094	-.106	-.122	-.140		-.127	-.127	-.087				14
15	-.100	-.118	-.131	-.150		-.140	-.119	-.170				15
16	-.112	-.120	-.153	-.155		-.088	-.066	.054				16
17						-.067	-.050	-.139				17
18	-.128	-.150	-.168	-.153		-.180	-.209	-.204				18
19	-.140	-.172	-.180	-.217	-.196	-.235	-.231	-.223				19
20	-.145	-.184	-.194	-.232	-.196	-.238	-.236	-.229				20
21	-.172	-.181	-.189	-.228	-.200	-.238	-.231	-.228				21
22	-.135	-.138	-.179	-.203	-.206	-.242	-.190	-.221				22

Table 5 Continued

Pressure coefficients on swept wing

Configuration 6 M=2.01 R=3.6 x 10^6

Orif	Station 1	2	3	4	24	5	6	7	8	9	10	Orif
					α= 6		δ= 17.2					
1	.892	.609	.715	.616		.808	.456	.911				1
2	-.007	-.057	-.047	-.045		-.054	-.047	-.007				2
3	-.058	-.078	-.056	-.052		-.063	-.049	-.016				3
4	-.054	-.108	-.091	-.078		-.078	-.080	-.053				4
5	-.060	-.110	-.103	-.086		-.083	-.084	-.057				5
6	-.070	-.106	-.117	-.097		-.092	-.094	-.061				6
7	-.073	-.106	-.120	-.108		-.105	-.105	-.064				7
8	-.071	-.108	-.134	-.118		-.115	-.116	-.078				8
9	-.088	-.116	-.144	-.130		-.120	-.122	-.080				9
10	-.089	-.110		-.130		-.124	-.125	-.100				10
11	-.091	-.106		-.133		-.123						11
12	-.092	-.108		-.133		-.122	-.125	-.177				12
13	-.091	-.103	-.131	-.134		-.124	-.124	-.181				13
14	-.093	-.104	-.126	-.135		-.124	-.125	-.088				14
15	-.096	-.113	-.130	-.146		-.137	-.083	-.161				15
16	-.110	-.114	-.147	-.149		-.055	-.012	.066				16
17						-.040	.006	-.125				17
18	-.126	-.147	-.163	-.145		-.216	-.248	-.244				18
19	-.141	-.166	-.180	-.216	-.224	-.263	-.254	-.256				19
20	-.141	-.180	-.188	-.242	-.221	-.256	-.252	-.266				20
21	-.174	-.177	-.185	-.231	-.219	-.247	-.238	-.264				21
22	-.131	-.134	-.174	-.200	-.231	-.244	-.219	-.238				22
					α= 9		δ= 2.8					
1	.901	.528	.629	.528		.788	.350	.939				1
2	-.040	-.097	-.091	-.101		-.099	-.102	-.059				2
3	-.084	-.116	-.099	-.103		-.105	-.094	-.055				3
4	-.084	-.142	-.129	-.120		-.119	-.116	-.093				4
5	-.088	-.149	-.143	-.128		-.123	-.122	-.090				5
6	-.097	-.142	-.147	-.136		-.130	-.127	-.093				6
7	-.099	-.135	-.158	-.138		-.138	-.139	-.102				7
8	-.102	-.143	-.167	-.151		-.147	-.143	-.118				8
9	-.109	-.146	-.174	-.165		-.157	-.143	-.136				9
10	-.109	-.142		-.159		-.158	-.147	-.160				10
11	-.114	-.134		-.159		-.159						11
12	-.114	-.134		-.162		-.159	-.147	-.219				12
13	-.115	-.131	-.165	-.161		-.157	-.150	-.186				13
14	-.118	-.128	-.155	-.162		-.158	-.157	-.154				14
15	-.116	-.138	-.163	-.172		-.168	-.142	-.210				15
16	-.133	-.140	-.177	-.176		-.116	-.100	.017				16
17						-.076	-.086	-.182				17
18	-.149	-.171	-.188	-.170		-.110	-.137	-.144				18
19	-.156	-.183	-.200	-.218	-.141	-.150	-.140	-.186				19
20	-.154	-.195	-.208	-.240	-.151	-.152	-.138	-.194				20
21	-.189	-.199	-.209	-.244	-.163	-.153	-.139	-.179				21
22	-.139	-.121	-.171	-.201	-.160	-.144	-.128	-.144				22
					α= 12		δ= -22.9					
1	.933	.398	.427	.376		.754	.205	.981				1
2	-.089	-.169	-.169	-.174		-.184	-.191	-.180				2
3	-.123	-.184	-.174	-.176		-.185	-.181	-.185				3
4	-.124	-.201	-.190	-.187		-.194	-.189	-.193				4
5	-.128	-.209	-.201	-.194		-.196	-.198	-.228				5
6	-.137	-.213	-.204	-.198		-.200	-.200	-.251				6
7	-.141	-.198	-.210	-.205		-.205	-.206	-.270				7
8	-.144	-.188	-.217	-.216		-.207	-.211	-.277				8
9	-.148	-.188	-.225	-.221		-.216	-.212	-.287				9
10	-.155	-.181		-.219		-.217	-.215	-.282				10
11	-.155	-.176		-.223		-.217						11
12	-.148	-.175		-.216		-.215	-.217	-.290				12
13	-.157	-.170	-.225	-.227		-.215	-.215	-.284				13
14	-.156	-.170	-.226	-.227		-.215	-.221	-.294				14
15	-.160	-.177	-.226	-.229		-.176	-.128	-.292				15
16	-.169	-.177	-.236	-.227		-.108	-.091	.003				16
17						-.093	-.078	-.168				17
18	-.183	-.203	-.234	-.205		-.123	-.094	-.272				18
19	-.191	-.216	-.243	-.270	-.173	-.086	-.093	-.282				19
20	-.194	-.226	-.249	-.293	-.200	-.078	-.078	-.296				20
21	-.215	-.226	-.246	-.288	-.201	-.071	-.064	-.275				21
22	-.168	-.121	-.152	-.283	-.197	-.067	-.047	-.256				22

Table 5 Continued

Pressure coefficients on swept wing

Configuration 6 M=2.01 R=3.6 x 10^6

Orif	Station 1	2	3	4	24	5	6	7	8	9	10	Orif
					α= 12		δ= -16.5					
1	.930	.397	.426	.378		.753	.208	.984				1
2	-.087	-.168	-.172	-.177		-.188	-.190	-.180				2
3	-.123	-.181	-.176	-.176		-.185	-.179	-.184				3
4	-.124	-.200	-.192	-.184		-.194	-.190	-.191				4
5	-.127	-.206	-.200	-.192		-.196	-.193	-.234				5
6	-.135	-.212	-.204	-.196		-.200	-.196	-.254				6
7	-.139	-.198	-.207	-.202		-.201	-.201	-.274				7
8	-.139	-.189	-.218	-.208		-.210	-.205	-.280				8
9	-.145	-.188	-.223	-.213		-.217	-.206	-.288				9
10	-.152	-.183		-.213		-.219	-.208	-.281				10
11	-.153	-.176		-.211		-.218						11
12	-.152	-.176		-.215		-.217	-.209	-.292				12
13	-.151	-.170	-.225	-.215		-.216	-.209	-.287				13
14	-.152	-.168	-.224	-.215		-.215	-.213	-.294				14
15	-.154	-.178	-.223	-.221		-.208	-.165	-.295				15
16	-.165	-.177	-.232	-.225		-.132	-.115	-.002				16
17						-.099	-.093	-.190				17
18	-.181	-.202	-.238	-.210		-.153	-.129	-.275				18
19	-.190	-.217	-.244	-.275	-.198	-.137	-.137	-.291				19
20	-.192	-.227	-.249	-.296	-.219	-.137	-.132	-.299				20
21	-.217	-.226	-.246	-.286	-.222	-.134	-.126	-.283				21
22	-.166	-.123	-.149	-.277	-.216	-.126	-.114	-.256				22
					α= 12		δ= -10.1					
1	.933	.400	.427	.379		.751	.203	.982				1
2	-.085	-.166	-.163	-.174		-.185	-.191	-.181				2
3	-.120	-.180	-.168	-.173		-.183	-.181	-.184				3
4	-.122	-.194	-.187	-.185		-.191	-.192	-.188				4
5	-.126	-.202	-.200	-.192		-.193	-.198	-.232				5
6	-.134	-.205	-.203	-.198		-.197	-.198	-.253				6
7	-.138	-.193	-.207	-.202		-.201	-.207	-.273				7
8	-.142	-.181	-.214	-.210		-.209	-.210	-.278				8
9	-.151	-.184	-.223	-.217		-.216	-.209	-.285				9
10	-.151	-.178		-.212		-.216	-.213	-.277				10
11	-.153	-.172		-.214		-.217						11
12	-.154	-.174		-.216		-.213	-.215	-.292				12
13	-.155	-.167	-.221	-.216		-.215	-.213	-.285				13
14	-.152	-.167	-.218	-.216		-.211	-.215	-.295				14
15	-.158	-.174	-.221	-.224		-.209	-.173	-.298				15
16	-.166	-.176	-.229	-.223		-.140	-.119	-.002				16
17						-.097	-.101	-.208				17
18	-.178	-.200	-.233	-.208		-.171	-.149	-.284				18
19	-.190	-.215	-.242	-.275	-.205	-.160	-.165	-.297				19
20	-.190	-.226	-.247	-.295	-.228	-.165	-.160	-.303				20
21	-.213	-.224	-.242	-.284	-.232	-.164	-.153	-.286				21
22	-.163	-.120	-.151	-.266	-.221	-.157	-.139	-.261				22
					α= 12		δ= - 6.9					
1	.934	.401	.427	.380		.755	.211	.982				1
2	-.087	-.167	-.169	-.175		-.183	-.193	-.171				2
3	-.121	-.185	-.174	-.173		-.178	-.182	-.176				3
4	-.122	-.200	-.190	-.185		-.186	-.190	-.184				4
5	-.124	-.207	-.199	-.192		-.188	-.192	-.224				5
6	-.136	-.209	-.201	-.198		-.193	-.196	-.244				6
7	-.138	-.197	-.207	-.200		-.196	-.201	-.263				7
8	-.141	-.187	-.215	-.207		-.206	-.206	-.271				8
9	-.149	-.187	-.222	-.215		-.215	-.206	-.277				9
10	-.152	-.181		-.211		-.213	-.209	-.271				10
11	-.154	-.175		-.213		-.214						11
12	-.152	-.174		-.213		-.210	-.209	-.288				12
13	-.154	-.169	-.222	-.213		-.210	-.211	-.277				13
14	-.153	-.168	-.222	-.214		-.208	-.213	-.289				14
15	-.158	-.176	-.221	-.220		-.206	-.169	-.289				15
16	-.166	-.176	-.232	-.222		-.142	-.121	.002				16
17						-.084	-.136	-.243				17
18	-.182	-.203	-.231	-.208		-.207	-.205	-.286				18
19	-.190	-.211	-.238	-.278	-.230	-.220	-.224	-.297				19
20	-.192	-.221	-.242	-.287	-.244	-.223	-.220	-.297				20
21	-.212	-.221	-.244	-.280	-.247	-.221	-.212	-.281				21
22	-.167	-.120	-.149	-.222	-.228	-.215	-.187	-.255				22

Table 5 Continued

Pressure coefficients on swept wing

Configuration 6 M= 2.01 R= 3.6 x 10^6

Orif	Station 1	2	3	4	24	5	6	7	8	9	10	Orif
					α= 12		δ= - 3.7					
1	.933	.401	.428	.377		.752	.206	.980				1
2	-.084	-.159	-.158	-.169		-.174	-.179	-.163				2
3	-.119	-.175	-.168	-.171		-.176	-.173	-.163				3
4	-.122	-.190	-.184	-.182		-.184	-.181	-.173				4
5	-.126	-.198	-.197	-.190		-.188	-.186	-.198				5
6	-.133	-.202	-.200	-.194		-.190	-.191	-.210				6
7	-.135	-.188	-.205	-.193		-.198	-.199	-.217				7
8	-.138	-.182	-.213	-.198		-.200	-.199	-.225				8
9	-.146	-.184	-.220	-.204		-.208	-.201	-.234				9
10	-.148	-.176		-.201		-.209	-.203	-.238				10
11	-.149	-.169		-.200		-.210						11
12	-.149	-.170		-.203		-.207	-.204	-.267				12
13	-.150	-.165	-.215	-.205		-.206	-.205	-.248				13
14	-.149	-.162	-.215	-.205		-.206	-.209	-.242				14
15	-.150	-.171	-.215	-.213		-.208	-.179	-.266				15
16	-.160	-.171	-.227	-.219		-.153	-.127	-.001				16
17						-.101	-.108	-.224				17
18	-.177	-.198	-.231	-.213		-.168	-.192	-.236				18
19	-.185	-.211	-.239	-.270	-.200	-.206	-.203	-.255				19
20	-.188	-.221	-.243	-.275	-.211	-.214	-.207	-.264				20
21	-.211	-.218	-.240	-.266	-.213	-.219	-.206	-.250				21
22	-.163	-.121	-.153	-.208	-.203	-.213	-.166	-.224				22
					α= 12		δ= - 0.5					
1	.935	.401	.428	.383		.759	.209	.980				1
2	-.081	-.158	-.163	-.173		-.181	-.184	-.171				2
3	-.117	-.173	-.169	-.174		-.174	-.172	-.172				3
4	-.123	-.192	-.184	-.180		-.183	-.182	-.176				4
5	-.126	-.200	-.198	-.184		-.189	-.184	-.215				5
6	-.134	-.200	-.203	-.191		-.193	-.189	-.230				6
7	-.138	-.190	-.205	-.196		-.195	-.198	-.244				7
8	-.138	-.181	-.213	-.201		-.201	-.198	-.245				8
9	-.146	-.182	-.221	-.211		-.209	-.199	-.253				9
10	-.148	-.177		-.207		-.209	-.201	-.254				10
11	-.153	-.169		-.206		-.205						11
12	-.148	-.169		-.207		-.203	-.200	-.275				12
13	-.152	-.167	-.217	-.209		-.204	-.204	-.264				13
14	-.148	-.167	-.218	-.209		-.205	-.205	-.263				14
15	-.155	-.174	-.219	-.212		-.209	-.182	-.279				15
16	-.165	-.173	-.228	-.217		-.150	-.129	-.004				16
17						-.103	-.105	-.236				17
18	-.176	-.200	-.233	-.214		-.185	-.199	-.256				18
19	-.186	-.212	-.242	-.280	-.204	-.228	-.216	-.272				19
20	-.188	-.223	-.244	-.280	-.211	-.229	-.225	-.280				20
21	-.216	-.221	-.241	-.265	-.218	-.229	-.220	-.266				21
22	-.163	-.120	-.150	-.204	-.205	-.227	-.165	-.242				22
					α= 12		δ= 2.8					
1	.937	.400	.430	.382		.750	.205	.986				1
2	-.080	-.166	-.165	-.176		-.182	-.187	-.176				2
3	-.119	-.179	-.172	-.175		-.178	-.180	-.178				3
4	-.123	-.197	-.187	-.185		-.189	-.190	-.183				4
5	-.126	-.203	-.198	-.193		-.193	-.195	-.219				5
6	-.136	-.212	-.201	-.198		-.198	-.198	-.240				6
7	-.138	-.194	-.207	-.204		-.200	-.204	-.254				7
8	-.141	-.186	-.216	-.207		-.208	-.207	-.255				8
9	-.149	-.185	-.223	-.215		-.215	-.208	-.263				9
10	-.152	-.180		-.217		-.216	-.213	-.264				10
11	-.153	-.171		-.214		-.216						11
12	-.153	-.172		-.215		-.213	-.211	-.282				12
13	-.154	-.168	-.222	-.217		-.213	-.215	-.271				13
14	-.153	-.166	-.221	-.217		-.211	-.215	-.276				14
15	-.156	-.175	-.221	-.224		-.212	-.186	-.285				15
16	-.167	-.174	-.230	-.227		-.152	-.129	-.007				16
17						-.105	-.105	-.249				17
18	-.180	-.199	-.234	-.213		-.196	-.217	-.269				18
19	-.189	-.216	-.242	-.282	-.216	-.240	-.235	-.281				19
20	-.189	-.226	-.243	-.282	-.225	-.241	-.238	-.287				20
21	-.217	-.221	-.243	-.270	-.226	-.240	-.232	-.274				21
22	-.163	-.120	-.149	-.213	-.209	-.234	-.172	-.248				22

Table 5 Concluded

Pressure coefficients on swept wing

Configuration 6 M=2.01 R=3.6 x 10^6

Orif	Station 1	2	3	4	24	5	6	7	8	9	10	Orif
					α= 12		δ= 9.2					
1	.936	.402	.427	.383		.752	.207	.985				1
2	-.080	-.166	-.164	-.174		-.182	-.192	-.177				2
3	-.119	-.180	-.174	-.174		-.182	-.181	-.178				3
4	-.122	-.198	-.192	-.190		-.190	-.194	-.186				4
5	-.126	-.206	-.199	-.194		-.192	-.196	-.223				5
6	-.134	-.211	-.203	-.199		-.199	-.200	-.246				6
7	-.139	-.196	-.208	-.204		-.202	-.206	-.259				7
8	-.140	-.188	-.221	-.213		-.211	-.207	-.263				8
9	-.149	-.188	-.224	-.220		-.216	-.210	-.271				9
10	-.153	-.181		-.217		-.217	-.211	-.266				10
11	-.153	-.174		-.215		-.219						11
12	-.151	-.174		-.216		-.214	-.211	-.285				12
13	-.153	-.167	-.223	-.220		-.216	-.217	-.271				13
14	-.150	-.167	-.222	-.220		-.215	-.219	-.277				14
15	-.157	-.174	-.221	-.224		-.214	-.173	-.289				15
16	-.163	-.174	-.228	-.227		-.145	-.119	.000				16
17						-.097	-.088	-.253				17
18	-.178	-.200	-.236	-.214		-.209	-.233	-.272				18
19	-.188	-.216	-.244	-.283	-.227	-.251	-.244	-.283				19
20	-.189	-.227	-.247	-.285	-.232	-.247	-.240	-.290				20
21	-.214	-.225	-.245	-.275	-.232	-.244	-.231	-.272				21
22	-.165	-.122	-.151	-.215	-.215	-.240	-.186	-.251				22
					α= 12		δ= 15.7					
1	.932	.395	.427	.386		.757	.208	.985				1
2	-.090	-.169	-.167	-.176		-.181	-.190	-.173				2
3	-.119	-.182	-.171	-.172		-.178	-.178	-.175				3
4	-.126	-.198	-.187	-.184		-.186	-.190	-.182				4
5	-.125	-.203	-.200	-.191		-.192	-.195	-.220				5
6	-.134	-.207	-.205	-.198		-.194	-.195	-.240				6
7	-.138	-.198	-.208	-.202		-.199	-.202	-.256				7
8	-.140	-.190	-.216	-.211		-.205	-.204	-.262				8
9	-.150	-.191	-.222	-.216		-.213	-.206	-.269				9
10	-.152	-.183		-.213		-.214	-.208	-.269				10
11	-.153	-.178		-.214		-.216						11
12	-.153	-.176		-.214		-.212	-.207	-.282				12
13	-.158	-.171	-.224	-.215		-.213	-.210	-.280				13
14	-.155	-.169	-.223	-.216		-.209	-.212	-.285				14
15	-.159	-.176	-.224	-.223		-.204	-.144	-.287				15
16	-.166	-.175	-.231	-.224		-.128	-.100	.002				16
17						-.065	-.047	-.261				17
18	-.181	-.204	-.237	-.209		-.220	-.241	-.281				18
19	-.192	-.214	-.241	-.279	-.227	-.256	-.246	-.290				19
20	-.195	-.225	-.247	-.285	-.236	-.249	-.244	-.294				20
21	-.215	-.224	-.244	-.275	-.236	-.247	-.237	-.278				21
22	-.169	-.120	-.151	-.214	-.224	-.237	-.201	-.257				22
					α= 15		δ= 4.6					
1	.955	.329	.289	.273		.680	.128	.911				1
2	-.107	-.191	-.192	-.203		-.209	-.219	-.225				2
3	-.133	-.200	-.198	-.200		-.205	-.209	-.211				3
4	-.138	-.213	-.212	-.211		-.212	-.212	-.231				4
5	-.141	-.221	-.219	-.214		-.216	-.217	-.260				5
6	-.149	-.227	-.230	-.219		-.218	-.221	-.271				6
7	-.153	-.217	-.225	-.224		-.224	-.225	-.282				7
8	-.156	-.208	-.233	-.227		-.227	-.227	-.288				8
9	-.167	-.204	-.239	-.232		-.233	-.227	-.298				9
10	-.169	-.197		-.232		-.232	-.228	-.290				10
11	-.169	-.189		-.232		-.232						11
12	-.167	-.187		-.232		-.228	-.228	-.301				12
13	-.170	-.182	-.237	-.236		-.230	-.228	-.296				13
14	-.171	-.182	-.238	-.236		-.228	-.231	-.304				14
15	-.171	-.189	-.240	-.239		-.218	-.179	-.300				15
16	-.176	-.189	-.248	-.243		-.160	-.136	-.003				16
17						-.111	-.108	-.200				17
18	-.194	-.212	-.255	-.227		-.159	-.178	-.282				18
19	-.200	-.223	-.260	-.284	-.192	-.192	-.185	-.292				19
20	-.203	-.234	-.263	-.294	-.205	-.186	-.182	-.302				20
21	-.227	-.232	-.259	-.284	-.208	-.189	-.176	-.286				21
22	-.188	-.128	-.169	-.219	-.204	-.189	-.140	-.264				22

Table 6

Pressure coefficients on swept wing

Configuration 9 M=2.01 R=3.6 x 10^6

Orif	Station 1	2	3	4	24	5	6	7	8	9	10	Orif
					α=-15		δ= 0.0					
1	.621	.732	.759	.724		.187	.610	.207	.752	.603	.076	1
2	.420	.564	.598	.619		.637	.654	.639	.618	.511	.398	2
3	.406	.450	.519	.507		.555	.579	.573	.526	.323	.241	3
4	.377	.394	.444	.477		.516	.520	.519	.416	.274	.163	4
5	.357	.372	.403	.434		.476	.489	.479	.365	.089	.096	5
6	.333	.346	.376	.409		.442	.458	.441	.119	.060	-.023	6
7	.325	.331	.357	.378		.408	.410	.426	.100		-.042	7
8	.304	.307	.315	.347		.360	.397	.398				8
9	.313	.281	.296	.315		.349	.384	.394				9
10	.294	.285		.320		.343	.370					10
11	.299	.289		.317		.342						11
12	.306	.315		.321		.344	.368					12
13	.278	.292	.301	.315		.339	.359	.535				13
14	.288	.284	.288	.305		.339	.348	.433				14
15	.276	.244	.255	.273		.280	.291	.250				15
16	.255	.159	.170	.208		.162	.174	.379				16
18	.192	.168	.181	.183		.213	.235	.157				18
19	.168	.126	.132	.143		.156	.157	.109				19
20	.143	.101	.104	.120		.133	.139	.084				20
21	.117	.104	.101	.116		.130	.140	.086				21
22	.134	.136	.099	.135		.132	.146	.065				22
					α=-12		δ=-30.0					
1	.706	.735	.800	.726		.373	.702	.433	.934	1.097	-.168	1
2	.305	.475	.521	.554		.547	.569	.481	.719	.941	.763	2
3	.328	.361	.419	.410		.464	.476	.309	.737	.822	.635	3
4	.288	.306	.357	.390		.428	.431	.236	.681	.800	.551	4
5	.275	.289	.319	.348		.387	.404	.170	.292	.590	.486	5
6	.254	.265	.293	.325		.359	.375	.181	.316	.525	.285	6
7	.246	.252	.277	.299		.329	.333	.445	.348		.265	7
8	.225	.229	.244	.275		.288	.316	.591				8
9	.234	.207	.221	.243		.275	.302	.562				9
10	.221	.209		.242		.263	.288	.546				10
11	.224	.215		.240		.260						11
12	.228	.235		.240		.263	.281	.276				12
13	.203	.220	.225	.235		.254	.275	.504				13
14	.215	.217	.217	.227		.257	.268	.285				14
15	.204	.177	.189	.204		.213	.226	-.062				15
16	.184	.106	.116	.145		.108	.125	.151				16
18	.131	.109	.122	.126		.149	.171	-.036				18
19	.118	.070	.076	.086		.094	.099	-.099				19
20	.084	.049	.051	.065		.074	.082	-.048				20
21	.047	.051	.051	.057		.074	.081	-.105				21
22	.073	.080	.046	.068		.075	.080	-.118				22
					α=-12		δ=-20.0					
1	.710	.738	.801	.726		.373	.700	.432	1.064	.947	-.094	1
2	.306	.474	.519	.552		.548	.569	.480	.482	.861	.642	2
3	.329	.361	.417	.411		.464	.475	.308	.302	.605	.470	3
4	.290	.305	.356	.390		.429	.431	.237	.431	.573	.365	4
5	.276	.288	.320	.348		.386	.403	.185	.381	.336	.283	5
6	.255	.265	.294	.328		.357	.375	.323	.213	.301	.111	6
7	.245	.251	.278	.300		.328	.335	.532	.115		.101	7
8	.225	.230	.246	.275		.289	.318	.541				8
9	.234	.207	.221	.243		.274	.303	.508				9
10	.221	.209		.243		.264	.290	.513				10
11	.225	.215		.242		.261						11
12	.230	.231		.243		.262	.281	.293				12
13	.203	.219	.225	.235		.254	.274	.705				13
14	.214	.214	.214	.229		.256	.269	.613				14
15	.204	.176	.188	.205		.211	.227	.103				15
16	.180	.105	.116	.147		.107	.127	.266				16
18	.133	.109	.123	.128		.147	.171	.044				18
19	.116	.071	.076	.086		.095	.099	-.060				19
20	.082	.048	.052	.065		.075	.081	-.024				20
21	.047	.050	.049	.057		.074	.081	-.091				21
22	.074	.078	.047	.076		.075	.080	-.103				22

Table 6 Continued

Pressure coefficients on swept wing

Configuration 9 M=2.01 R=3.6 x 10^6

Orif	Station 1	2	3	4	24	5	6	7	8	9	10	Orif
					α=-12		δ= -10.0					
1	.706	.735	.801	.727		.372	.702	.431	1.105	.792	.015	1
2	.304	.471	.517	.553		.548	.572	.482	.486	.697	.494	2
3	.326	.358	.416	.412		.466	.478	.309	.399	.437	.339	3
4	.286	.304	.355	.388		.428	.434	.244	.370	.391	.232	4
5	.273	.285	.318	.349		.388	.407	.343	.332	.196	.159	5
6	.253	.263	.294	.328		.359	.377	.506	.186	.139	.016	6
7	.245	.250	.275	.297		.330	.335	.499	.098		-.007	7
8	.221	.229	.244	.274		.287	.318	.479				8
9	.232	.205	.219	.241		.270	.302	.475				9
10	.219	.209		.242		.262	.286	.455				10
11	.223	.211		.240		.259						11
12	.225	.219		.242		.261	.281	.312				12
13	.201	.218	.224	.235		.254	.276	.715				13
14	.213	.213	.215	.227		.258	.269	.556				14
15	.202	.174	.189	.204		.215	.225	.328				15
16	.181	.103	.115	.146		.107	.128	.428				16
18	.129	.107	.121	.127		.149	.172	.160				18
19	.114	.069	.076	.086		.094	.101	.033				19
20	.083	.048	.051	.065		.076	.084	.009				20
21	.046	.048	.047	.058		.075	.083	-.076				21
22	.072	.076	.045	.073		.076	.082	-.100				22
					α=-12		δ= - 5.0					
1	.709	.734	.800	.727		.370	.701	.429	1.061	.653	.133	1
2	.307	.472	.518	.554		.548	.571	.481	.301	.536	.393	2
3	.330	.359	.416	.411		.466	.475	.311	.329	.323	.243	3
4	.289	.305	.355	.391		.429	.432	.434	.261	.276	.157	4
5	.277	.285	.317	.348		.386	.403	.463	.281	.083	.092	5
6	.256	.264	.292	.327		.358	.375	.466	.097	.020	-.048	6
7	.247	.251	.276	.298		.327	.331	.454	.059		-.083	7
8	.225	.230	.243	.275		.285	.314	.423				8
9	.235	.205	.218	.241		.272	.301	.422				9
10	.222	.209		.242		.262	.287	.383				10
11	.225	.213		.240		.259						11
12	.229	.233		.241		.261	.280	.281				12
13	.205	.220	.222	.234		.253	.274	.565				13
14	.217	.212	.212	.226		.256	.267	.452				14
15	.205	.175	.186	.203		.211	.226	.276				15
16	.179	.105	.115	.147		.107	.125	.376				16
18	.132	.106	.120	.128		.147	.172	.136				18
19	.117	.071	.076	.086		.093	.099	.108				19
20	.084	.047	.051	.066		.073	.080	.073				20
21	.046	.049	.047	.059		.073	.082	.002				21
22	.072	.079	.045	.078		.074	.082	-.066				22
					α=-12		δ= 0.0					
1	.710	.735	.800	.724		.369	.702	.427	.873	.524	.244	1
2	.309	.474	.517	.549		.545	.570	.477	.533	.432	.332	2
3	.329	.361	.415	.409		.463	.475	.449	.459	.251	.186	3
4	.290	.305	.355	.388		.427	.433	.426	.342	.201	.114	4
5	.276	.289	.318	.346		.385	.405	.399	.286	.042	.049	5
6	.255	.266	.293	.325		.356	.375	.373	.074	.002	-.071	6
7	.247	.252	.276	.296		.325	.336	.354	.047		-.092	7
8	.227	.231	.242	.273		.289	.316	.330				8
9	.236	.207	.218	.239		.275	.303	.323				9
10	.223	.210		.240		.265	.288	.285				10
11	.225	.213		.237		.262						11
12	.229	.232		.238		.264	.281	.213				12
13	.203	.220	.222	.234		.257	.275	.467				13
14	.215	.214	.214	.226		.259	.269	.374				14
15	.203	.178	.187	.202		.215	.226	.204				15
16	.180	.107	.114	.145		.109	.121	.333				16
18	.132	.109	.120	.123		.148	.170	.114				18
19	.118	.071	.074	.083		.095	.097	.068				19
20	.084	.046	.049	.062		.075	.082	.060				20
21	.048	.047	.047	.054		.074	.080	.049				21
22	.074	.075	.045	.071		.076	.082	.020				22

Table 6 Continued

Pressure coefficients on swept wing

Configuration 9 M=2.01 R=3.6 x 10^6

Orif	Station 1	2	3	4	24	5	6	7	8	9	10	Orif
					α=-12		δ= 5.0					
1	.708	.735	.799	.725		.369	.702	.429	.990	.458	.395	1
2	.306	.473	.516	.551		.547	.574	.884	.274	.371	.270	2
3	.326	.360	.413	.410		.463	.480	.766	.251	.194	.138	3
4	.288	.304	.352	.389		.427	.436	.540	.232	.146	.081	4
5	.275	.286	.321	.347		.386	.409	.432	.214	-.009	.011	5
6	.256	.263	.294	.325		.357	.379	.358	.007	-.042	-.096	6
7	.246	.251	.278	.296		.325	.337	.317	-.039		-.108	7
8	.225	.229	.246	.273		.290	.320	.262				8
9	.233	.203	.221	.241		.274	.304	.251				9
10	.220	.207		.242		.266	.290	.189				10
11	.225	.211		.239		.263						11
12	.227	.231		.240		.265	.283	.143				12
13	.202	.218	.225	.234		.257	.276	.294				13
14	.213	.212	.217	.225		.260	.271	.202				14
15	.202	.174	.190	.203		.216	.227	.080				15
16	.178	.103	.115	.146		.108	.122	.247				16
18	.131	.104	.122	.125		.150	.173	.028				18
19	.118	.070	.075	.085		.097	.104	-.001				19
20	.084	.044	.051	.064		.079	.093	.026				20
21	.046	.047	.047	.059		.076	.101	-.020				21
22	.074	.075	.044	.066		.078	.099	-.047				22
					α=-12		δ= 10.0					
1	.709	.737	.798	.726		.368	.702	.425	1.023	.407	.572	1
2	.308	.474	.518	.555		.546	.571	.541	.263	.348	.218	2
3	.329	.360	.415	.411		.463	.476	.580	.168	.153	.117	3
4	.290	.307	.354	.390		.425	.433	.603	.134	.108	.062	4
5	.276	.289	.320	.349		.385	.405	.728	.122	-.070	-.010	5
6	.256	.267	.293	.328		.357	.376	.463	-.052	-.085	-.108	6
7	.246	.252	.278	.299		.328	.335	.333	-.086		-.121	7
8	.225	.229	.245	.276		.288	.316	.249				8
9	.236	.205	.221	.243		.274	.301	.219				9
10	.223	.209		.244		.264	.286	.114				10
11	.225	.212		.241		.261						11
12	.228	.219		.242		.263	.280	.066				12
13	.203	.217	.224	.236		.257	.274	.151				13
14	.216	.212	.216	.229		.259	.267	.091				14
15	.205	.176	.191	.204		.214	.225	-.013				15
16	.178	.107	.116	.147		.108	.119	.166				16
18	.130	.109	.122	.127		.146	.171	-.011				18
19	.117	.073	.076	.086		.094	.102	-.050				19
20	.085	.049	.052	.065		.074	.091	-.010				20
21	.047	.051	.048	.059		.073	.100	-.066				21
22	.074	.080	.046	.073		.075	.103	-.073				22
					α=-12		δ= 20.0					
1	.712	.740	.796	.726		.367	.699	.424	.974	.284	.767	1
2	.309	.477	.516	.554		.547	.569	.485	.105	.251	.198	2
3	.331	.362	.415	.412		.464	.477	.314	.069	.101	.136	3
4	.291	.307	.357	.390		.428	.432	.508	-.006	.001	.078	4
5	.277	.291	.323	.350		.388	.403	.423	.025	-.140	-.012	5
6	.257	.265	.295	.329		.357	.376	.448	-.159	-.156	-.108	6
7	.248	.253	.279	.300		.327	.332	.581	-.122		-.133	7
8	.226	.233	.247	.277		.287	.317	.548				8
9	.236	.209	.222	.244		.274	.303	.323				9
10	.224	.210		.245		.265	.288	.069				10
11	.227	.216		.242		.262						11
12	.228	.231		.242		.264	.282	-.041				12
13	.205	.221	.225	.236		.257	.276	.002				13
14	.217	.216	.217	.229		.257	.270	-.034				14
15	.205	.177	.190	.204		.213	.225	-.110				15
16	.176	.108	.116	.148		.107	.120	.097				16
18	.134	.110	.122	.128		.148	.173	-.076				18
19	.118	.074	.078	.087		.095	.103	-.112				19
20	.086	.047	.051	.066		.076	.093	-.048				20
21	.049	.051	.050	.059		.074	.107	-.111				21
22	.075	.080	.046	.076		.076	.106	-.105				22

Table 6 Continued

Pressure coefficients on swept wing

Configuration 9 M=2.01 R=3.6 x 10^6

Orif	Station 1	2	3	4	24	5	6	7	8	9	10	Orif
					α=-12		δ= 30.0					
1	.709	.735	.798	.727		.368	.700	.424	.851	.210	.695	1
2	.306	.474	.516	.555		.549	.575	.487	-.004	.145	-.040	2
3	.328	.362	.416	.413		.467	.480	.315	-.043	.011	.112	3
4	.289	.308	.355	.391		.429	.436	.245	-.068	-.132	.057	4
5	.275	.288	.321	.351		.391	.408	.520	-.017	-.191	-.053	5
6	.254	.265	.296	.328		.360	.378	.513	-.217	-.204	-.085	6
7	.246	.251	.277	.300		.330	.337	.517	-.150		-.160	7
8	.225	.230	.246	.277		.289	.319	.595				8
9	.233	.208	.221	.244		.275	.304	.789				9
10	.221	.209		.245		.265	.292	.193				10
11	.225	.214		.242		.262						11
12	.229	.225		.243		.264	.283	-.164				12
13	.205	.220	.225	.238		.256	.278	-.012				13
14	.214	.215	.218	.230		.261	.272	-.068				14
15	.205	.177	.191	.205		.214	.229	-.168				15
16	.175	.109	.118	.149		.110	.121	.060				16
18	.131	.110	.124	.127		.149	.175	-.166				18
19	.118	.073	.078	.088		.096	.104	-.171				19
20	.083	.048	.053	.066		.078	.101	-.094				20
21	.047	.052	.049	.059		.075	.119	-.150				21
22	.074	.079	.047	.068		.077	.114	-.142				22
					α= - 9		δ= 0.0					
1	.771	.733	.814	.754		.545	.749	.669	.912	.431	.370	1
2	.316	.373	.437	.457		.448	.480	.411	.416	.351	.240	2
3	.248	.259	.301	.320		.376	.364	.352	.360	.181	.115	3
4	.219	.233	.277	.304		.339	.342	.349	.265	.129	.069	4
5	.207	.210	.238	.267		.304	.317	.324	.205	.006	.006	5
6	.189	.195	.214	.242		.274	.293	.299	.034	-.015	-.074	6
7	.176	.181	.201	.222		.247	.259	.287	.012		-.087	7
8	.160	.165	.171	.200		.214	.242	.257				8
9	.165	.143	.153	.172		.198	.226	.253				9
10	.154	.144		.171		.192	.214	.219				10
11	.152	.148		.168		.187						11
12	.155	.178		.171		.188	.206	.148				12
13	.149	.153	.151	.165		.180	.201	.372				13
14	.153	.149	.146	.157		.183	.197	.278				14
15	.141	.119	.125	.135		.146	.163	.137				15
16	.112	.057	.058	.086		.047	.064	.264				16
18	.077	.055	.066	.069		.087	.112	.049				18
19	.057	.021	.022	.032		.040	.044	.013				19
20	.031	.000	-.001	.011		.019	.030	-.012				20
21	.008	.000	-.003	.008		.016	.030	-.005				21
22	.025	.025	-.003	.018		.018	.029	-.026				22
					α= - 6		δ= -30.0					
1	.827	.729	.802	.756		.679	.751	.858	1.047	.922	-.108	1
2	.197	.272	.332	.365		.365	.384	.306	.796	.795	.629	2
3	.179	.191	.223	.236		.272	.251	.082	.552	.610	.506	3
4	.153	.153	.196	.212		.232	.246	.078	.724	.501	.362	4
5	.144	.131	.155	.181		.209	.222	.046	.354	.324	.273	5
6	.125	.123	.138	.160		.187	.200	.061	.378	.275	.115	6
7	.113	.115	.126	.143		.166	.174	.338	.249		.106	7
8	.097	.099	.102	.124		.135	.159	.354				8
9	.100	.080	.085	.097		.122	.146	.372				9
10	.093	.081		.099		.115	.133	.327				10
11	.093	.087		.095		.111						11
12	.093	.110		.098		.113	.126	.066				12
13	.093	.092	.085	.095		.108	.123	.069				13
14	.093	.090	.080	.089		.113	.119	.072				14
15	.082	.060	.063	.069		.079	.094	-.141				15
16	.056	.013	.005	.030		-.005	.015	.077				16
18	.031	.006	.010	.011		.024	.044	-.145				18
19	.012	-.026	-.026	-.024		-.014	-.013	-.196				19
20	-.009	-.043	-.046	-.040		-.032	-.030	-.127				20
21	-.045	-.043	-.049	-.045		-.036	-.030	-.173				21
22	-.024	-.023	-.049	-.036		-.036	-.031	-.143				22

Table 6 Continued

Pressure coefficients on swept wing

Configuration 9 M= 2.01 R= 3.6 x 10^6

Orif	Station 1	2	3	4	24	5	6	7	8	9	10	Orif
					α= - 6		δ= -20.0					
1	.826	.727	.800	.758		.678	.751	.858	1.133	.680	.026	1
2	.197	.272	.331	.366		.362	.382	.305	.364	.608	.436	2
3	.178	.189	.222	.238		.269	.251	.082	.345	.357	.301	3
4	.152	.152	.193	.213		.230	.244	.078	.411	.284	.189	4
5	.143	.131	.156	.181		.209	.221	.076	.198	.140	.115	5
6	.124	.123	.139	.161		.186	.202	.302	.142	.118	-.008	6
7	.112	.114	.127	.144		.166	.175	.333	.136		-.009	7
8	.097	.099	.104	.125		.136	.159	.340				8
9	.099	.077	.086	.097		.124	.147	.315				9
10	.094	.079		.099		.117	.132	.288				10
11	.093	.085		.093		.111						11
12	.091	.100		.098		.114	.128	.085				12
13	.091	.090	.087	.094		.109	.123	.417				13
14	.092	.087	.081	.086		.112	.119	.320				14
15	.081	.060	.065	.069		.078	.093	.002				15
16	.054	.013	.006	.028		-.001	.016	.165				16
18	.031	.004	.012	.010		.024	.043	-.057				18
19	.013	-.025	-.027	-.025		-.016	-.014	-.129				19
20	-.009	-.044	-.045	-.043		-.036	-.029	-.098				20
21	-.046	-.044	-.048	-.047		-.035	-.028	-.154				21
22	-.025	-.024	-.049	-.028		-.032	-.030	-.147				22
					α= - 6		δ= -10.0					
1	.826	.729	.803	.762		.678	.750	.853	1.134	.465	.262	1
2	.196	.271	.336	.370		.365	.384	.305	.398	.410	.269	2
3	.179	.190	.225	.241		.271	.251	.084	.402	.201	.155	3
4	.153	.153	.194	.215		.234	.244	.195	.249	.129	.084	4
5	.144	.130	.157	.185		.213	.222	.300	.141	.026	.016	5
6	.126	.123	.139	.164		.191	.202	.306	.044	-.012	-.084	6
7	.113	.115	.126	.145		.168	.174	.309	-.024		-.091	7
8	.098	.099	.104	.127		.138	.160	.272				8
9	.100	.079	.085	.100		.124	.148	.272				9
10	.095	.081		.101		.118	.134	.237				10
11	.094	.085		.096		.113						11
12	.093	.101		.099		.115	.128	.108				12
13	.093	.092	.088	.096		.109	.124	.388				13
14	.093	.088	.082	.090		.114	.119	.299				14
15	.082	.062	.064	.069		.081	.094	.139				15
16	.052	.016	.007	.028		.001	.017	.266				16
18	.029	.004	.013	.012		.024	.043	.041				18
19	.013	-.025	-.024	-.023		-.015	-.013	-.026				19
20	-.009	-.043	-.045	-.041		-.034	-.028	-.054				20
21	-.045	-.043	-.046	-.044		-.034	-.026	-.087				21
22	-.024	-.022	-.046	-.029		-.033	-.028	-.099				22
					α= - 6		δ= - 5.0					
1	.827	.728	.807	.757		.676	.754	.852	1.122	.377	.373	1
2	.200	.271	.338	.368		.364	.386	.306	.338	.315	.191	2
3	.183	.191	.226	.240		.269	.254	.117	.267	.142	.077	3
4	.156	.153	.197	.215		.231	.246	.292	.171	.090	.046	4
5	.147	.132	.157	.182		.209	.224	.293	.110	-.026	-.023	5
6	.127	.126	.138	.163		.188	.205	.273	-.015	-.069	-.105	6
7	.116	.116	.126	.146		.166	.177	.265	-.041		-.118	7
8	.102	.100	.103	.126		.138	.165	.235				8
9	.103	.079	.086	.099		.126	.149	.232				9
10	.097	.082		.101		.119	.134	.207				10
11	.095	.087		.095		.114						11
12	.094	.109		.100		.116	.130	.110				12
13	.093	.092	.088	.095		.111	.128	.319				13
14	.094	.091	.082	.088		.115	.123	.244				14
15	.084	.064	.064	.069		.083	.098	.105				15
16	.053	.016	.008	.030		.002	.017	.248				16
18	.032	.009	.012	.012		.027	.045	.019				18
19	.014	-.021	-.025	-.022		-.014	-.011	-.009				19
20	-.007	-.040	-.044	-.040		-.031	-.025	-.035				20
21	-.042	-.041	-.047	-.044		-.033	-.025	-.073				21
22	-.021	-.019	-.047	-.029		-.031	-.024	-.091				22

Table 6 Continued

Pressure coefficients on swept wing

Configuration 9 M= 2.01 R= 3.6 x 10^6

Orif	Station 1	2	3	4	24	5	6	7	8	9	10	Orif
						α= − 6 δ= 0.0						
1	.823	.723	.804	.756		.680	.749	.849	.918	.282	.516	1
2	.195	.268	.333	.364		.363	.381	.331	.283	.232	.122	2
3	.178	.186	.223	.236		.270	.250	.207	.249	.084	.045	3
4	.151	.149	.192	.210		.231	.242	.251	.152	.055	.036	4
5	.143	.129	.156	.179		.209	.220	.228	.109	−.050	−.022	5
6	.122	.120	.136	.159		.188	.199	.207	−.042	−.089	−.098	6
7	.111	.112	.126	.142		.167	.173	.200	−.042		−.105	7
8	.097	.097	.104	.121		.136	.156	.172				8
9	.098	.077	.086	.093		.122	.146	.169				9
10	.093	.078		.095		.115	.132	.140				10
11	.092	.082		.090		.111						11
12	.090	.099		.096		.112	.125	.076				12
13	.092	.086	.088	.091		.107	.121	.269				13
14	.092	.085	.082	.085		.111	.117	.193				14
15	.081	.059	.065	.064		.078	.092	.072				15
16	.051	.013	.008	.025		−.005	.012	.214				16
18	.030	.005	.013	.007		.022	.043	.004				18
19	.012	−.026	−.024	−.028		−.019	−.015	−.035				19
20	−.009	−.044	−.047	−.043		−.038	−.030	−.047				20
21	−.047	−.045	−.047	−.050		−.038	−.032	−.047				21
22	−.027	−.024	−.048	−.031		−.037	−.030	−.067				22
						α= − 6 δ= 5.0						
1	.825	.726	.798	.758		.678	.752	.850	.971	.245	.628	1
2	.197	.270	.331	.366		.365	.384	.636	.209	.205	.093	2
3	.179	.188	.220	.237		.270	.253	.324	.175	.072	.044	3
4	.153	.152	.190	.211		.233	.246	.225	.118	.050	.034	4
5	.145	.128	.156	.180		.211	.223	.228	.095	−.063	−.024	5
6	.124	.122	.137	.158		.188	.204	.175	−.051	−.082	−.104	6
7	.113	.112	.125	.142		.168	.176	.162	−.069		−.115	7
8	.097	.096	.102	.123		.139	.161	.126				8
9	.099	.076	.085	.097		.125	.148	.119				9
10	.094	.077		.098		.118	.134	.088				10
11	.093	.083		.092		.113						11
12	.091	.104		.097		.117	.127	.038				12
13	.092	.088	.087	.093		.110	.124	.135				13
14	.093	.086	.081	.087		.116	.119	.112				14
15	.081	.060	.065	.067		.081	.094	.014				15
16	.050	.013	.009	.027		.001	.013	.179				16
18	.030	.003	.013	.009		.025	.044	−.027				18
19	.012	−.028	−.025	−.028		−.015	−.013	−.060				19
20	−.011	−.044	−.044	−.042		−.032	−.025	−.044				20
21	−.046	−.047	−.047	−.048		−.034	−.021	−.070				21
22	−.027	−.026	−.046	−.031		−.031	−.018	−.090				22
						α= − 6 δ= 10.0						
1	.822	.722	.801	.758		.677	.749	.849	.994	.185	.732	1
2	.197	.270	.332	.364		.365	.382	.314	.122	.166	.085	2
3	.178	.187	.223	.237		.273	.251	.320	.097	.044	.069	3
4	.152	.148	.192	.213		.234	.244	.268	.043	.027	.051	4
5	.144	.130	.157	.181		.212	.222	.410	.050	−.076	−.003	5
6	.124	.122	.139	.161		.190	.203	.225	−.079	−.101	−.072	6
7	.112	.112	.125	.144		.169	.176	.152	−.092		−.103	7
8	.097	.097	.103	.126		.136	.161	.096				8
9	.099	.078	.086	.098		.123	.148	.077				9
10	.095	.079		.100		.118	.135	.044				10
11	.094	.085		.094		.112						11
12	.092	.099		.099		.116	.130	−.015				12
13	.093	.089	.088	.095		.109	.124	.074				13
14	.093	.089	.082	.088		.114	.120	.030				14
15	.082	.063	.066	.069		.079	.095	−.042				15
16	.051	.017	.010	.029		.000	.013	.132				16
18	.031	.008	.013	.012		.026	.047	−.071				18
19	.013	−.022	−.023	−.024		−.014	−.011	−.083				19
20	−.010	−.041	−.045	−.040		−.031	−.022	−.067				20
21	−.044	−.042	−.046	−.046		−.033	−.018	−.095				21
22	−.023	−.021	−.047	−.030		−.031	−.014	−.108				22

Table 6 Continued

Pressure coefficients on swept wing

Configuration 9 M= 2.01 R= 3.6 x 10^6

Orif	Station 1	2	3	4	24	5	6	7	8	9	10	Orif
					α= − 6		δ= 20.0					
1	.825	.726	.802	.758		.677	.746	.851	.894	.116	.741	1
2	.196	.271	.332	.365		.367	.382	.309	.004	.086	.016	2
3	.178	.190	.222	.236		.273	.251	.094	-.016	.017	.060	3
4	.151	.151	.190	.212		.234	.245	.381	-.069	-.045	.052	4
5	.144	.129	.153	.182		.212	.221	.339	-.019	-.110	-.016	5
6	.125	.123	.136	.161		.188	.202	.302	-.137	-.139	-.070	6
7	.112	.114	.124	.144		.167	.177	.301	-.114		-.112	7
8	.097	.099	.102	.125		.137	.162	.285				8
9	.099	.078	.084	.098		.123	.150	.126				9
10	.093	.079		.100		.118	.137	-.022				10
11	.093	.084		.094		.113						11
12	.092	.096		.099		.115	.132	-.092				12
13	.093	.090	.086	.093		.110	.127	-.014				13
14	.093	.087	.081	.088		.112	.121	-.042				14
15	.082	.059	.064	.067		.081	.096	-.096				15
16	.049	.014	.008	.028		-.001	.013	.091				16
18	.032	.004	.013	.011		.026	.046	-.125				18
19	.012	-.027	-.027	-.023		-.017	-.012	-.139				19
20	-.010	-.045	-.040	-.040		-.033	-.022	-.087				20
21	-.044	-.045	-.049	-.045		-.036	-.014	-.129				21
22	-.024	-.026	-.047	-.032		-.034	-.011	-.135				22
					α= − 6		δ= 30.0					
1	.824	.729	.798	.761		.677	.754	.850	.661	.014	.552	1
2	.196	.272	.331	.367		.366	.388	.309	-.094	-.010	-.143	2
3	.177	.189	.220	.240		.272	.255	.087	-.117	-.083	-.134	3
4	.152	.153	.189	.215		.236	.248	.084	-.128	-.157	-.029	4
5	.144	.129	.156	.183		.214	.225	.192	-.105	-.186	-.069	5
6	.125	.123	.138	.162		.190	.207	.513	-.190	-.188	-.118	6
7	.112	.116	.125	.142		.169	.178	.444	-.137		-.164	7
8	.096	.098	.103	.126		.140	.163	.428				8
9	.099	.079	.086	.101		.126	.150	.442				9
10	.094	.080		.100		.119	.137	.068				10
11	.093	.086		.094		.115						11
12	.093	.104		.100		.117	.132	-.215				12
13	.093	.092	.087	.095		.112	.126	-.135				13
14	.093	.089	.082	.089		.115	.122	-.158				14
15	.083	.062	.066	.068		.083	.097	-.178				15
16	.046	.017	.011	.029		.001	.014	.049				16
18	.031	.007	.013	.012		.029	.048	-.208				18
19	.013	-.025	-.022	-.022		-.014	-.010	-.216				19
20	-.011	-.042	-.044	-.040		-.031	-.016	-.140				20
21	-.043	-.042	-.047	-.045		-.032	.001	-.198				21
22	-.024	-.022	-.047	-.033		-.030	.008	-.184				22
					α= − 3		δ= 0.0					
1	.833	.714	.798	.723		.747	.712	.897	.899	.213	.615	1
2	.131	.180	.225	.250		.263	.288	.298	.215	.138	.071	2
3	.118	.116	.163	.185		.201	.201	.152	.140	.027	.004	3
4	.094	.084	.118	.138		.163	.152	.149	.073	.018	.022	4
5	.087	.062	.084	.110		.132	.139	.141	.028	-.079	-.032	5
6	.065	.057	.069	.088		.119	.123	.120	-.081	-.115	-.115	6
7	.053	.051	.059	.074		.100	.099	.122	-.063		-.127	7
8	.044	.038	.039	.055		.070	.087	.100				8
9	.044	.021	.025	.034		.057	.078	.097				9
10	.040	.021		.035		.050	.066	.078				10
11	.038	.027		.032		.046						11
12	.038	.038		.034		.048	.062	.018				12
13	.040	.031	.028	.033		.043	.058	.151				13
14	.040	.032	.026	.029		.049	.053	.109				14
15	.030	.008	.011	.011		.020	.034	.018				15
16	.003	-.025	-.037	-.020		-.051	-.030	.171				16
18	-.016	-.041	-.035	-.041		-.028	-.011	-.038				18
19	-.032	-.070	-.070	-.073		-.066	-.064	-.074				19
20	-.046	-.085	-.088	-.088		-.084	-.079	-.086				20
21	-.086	-.085	-.092	-.092		-.083	-.079	-.085				21
22	-.066	-.066	-.090	-.080		-.082	-.078	-.097				22

Table 6 Continued

Pressure coefficients on swept wing

Configuration 9 M=2.01 R=3.6 x 10^6

Orif	Station 1	2	3	4	24	5	6	7	8	9	10	Orif
						α= 0	δ= -30.0					
1	.842	.698	.772	.648		.777	.663	.891	1.070	.722	-.017	1
2	.083	.102	.135	.152		.148	.156	.109	.868	.518	.427	2
3	.044	.054	.100	.114		.113	.122	.032	.373	.284	.324	3
4	.044	.026	.054	.067		.081	.077	.012	.317	.235	.168	4
5	.037	.002	.022	.048		.063	.058	.021	.165	.103	.102	5
6	.018	.002	.007	.027		.040	.045	.101	.079	.077	-.006	6
7	.008	-.005	-.005	.010		.029	.028	.104	.063		-.003	7
8	.004	-.013	-.019	-.005		.009	.017	.098				8
9	.001	-.027	-.031	-.023		-.006	.014	.060				9
10	-.010	-.024		-.024		-.015	.004	.033				10
11	-.010	-.020		-.029		-.016						11
12	-.010	-.018		-.029		-.013	.001	-.089				12
13	-.013	-.015	-.026	-.029		-.016	-.006	.019				13
14	-.009	-.013	-.027	-.031		-.016	-.009	-.041				14
15	-.016	-.034	-.040	-.040		-.038	-.026	-.196				15
16	-.040	-.064	-.081	-.067		-.098	-.075	.026				16
18	-.060	-.078	-.080	-.087		-.085	-.067	-.210				18
19	-.069	-.105	-.108	-.117		-.115	-.111	-.224				19
20	-.080	-.122	-.124	-.129		-.132	-.123	-.134				20
21	-.129	-.122	-.126	-.133		-.133	-.123	-.185				21
22	-.093	-.104	-.126	-.123		-.131	-.122	-.176				22
						α= 0	δ= -20.0					
1	.844	.700	.779	.643		.773	.660	.895	1.145	.468	.224	1
2	.081	.098	.135	.149		.152	.156	.111	.508	.348	.244	2
3	.048	.053	.100	.112		.112	.124	.031	.335	.120	.115	3
4	.044	.027	.055	.067		.081	.078	.013	.136	.095	.063	4
5	.033	.003	.023	.048		.064	.057	.128	.055	-.015	.007	5
6	.017	.001	.006	.027		.046	.047	.115	-.012	-.033	-.077	6
7	.009	-.004	-.005	.008		.032	.031	.121	-.018		-.072	7
8	.002	-.013	-.018	-.007		.013	.022	.099				8
9	-.002	-.030	-.033	-.024		-.005	.014	.064				9
10	-.008	-.027		-.023		-.011	.003	.048				10
11	-.010	-.023		-.028		-.013						11
12	-.010	-.020		-.028		-.012	-.002	-.065				12
13	-.013	-.019	-.026	-.031		-.015	-.006	.116				13
14	-.008	-.017	-.027	-.029		-.013	-.010	.051				14
15	-.017	-.037	-.040	-.041		-.034	-.025	-.087				15
16	-.044	-.062	-.079	-.065		-.094	-.073	.094				16
18	-.060	-.080	-.077	-.085		-.083	-.065	-.138				18
19	-.065	-.104	-.109	-.117		-.114	-.112	-.158				19
20	-.079	-.123	-.125	-.128		-.128	-.127	-.114				20
21	-.128	-.121	-.126	-.131		-.129	-.122	-.160				21
22	-.096	-.105	-.127	-.124		-.129	-.123	-.145				22
						α= 0	δ= -10.0					
1	.842	.696	.774	.649		.774	.662	.898	1.121	.281	.514	1
2	.081	.102	.137	.148		.152	.155	.112	.276	.137	.104	2
3	.046	.056	.100	.116		.111	.127	.065	.107	.016	-.011	3
4	.044	.027	.055	.066		.082	.078	.107	.058	-.001	.020	4
5	.036	.003	.024	.049		.064	.057	.122	-.009	-.083	-.018	5
6	.018	.003	.007	.028		.044	.047	.105	-.076	-.103	-.085	6
7	.009	-.006	-.007	.013		.034	.029	.096	-.068		-.090	7
8	.003	-.013	-.019	-.001		.009	.021	.069				8
9	-.001	-.030	-.030	-.018		-.007	.014	.061				9
10	-.009	-.026		-.018		-.013	.004	.043				10
11	-.011	-.025		-.021		-.014						11
12	-.010	-.022		-.021		-.013	-.001	-.029				12
13	-.013	-.017	-.022	-.022		-.015	-.005	.083				13
14	-.007	-.015	-.026	-.021		-.013	-.007	.050				14
15	-.013	-.038	-.040	-.035		-.037	-.024	-.021				15
16	-.044	-.065	-.082	-.064		-.095	-.073	.142				16
18	-.058	-.082	-.081	-.089		-.082	-.061	-.077				18
19	-.066	-.106	-.109	-.117		-.116	-.115	-.112				19
20	-.078	-.122	-.125	-.130		-.127	-.125	-.102				20
21	-.127	-.122	-.129	-.134		-.132	-.122	-.123				21
22	-.094	-.105	-.128	-.128		-.129	-.122	-.134				22

Table 6 Continued

Pressure coefficients on swept wing

Configuration 9 M=2.01 R=3.6 x 10^6

Orif	Station 1	2	3	4	24	5	6	7	8	9	10	Orif
					α= 0		δ= - 5.0					
1	.846	.700	.779	.648		.776	.665	.893	1.070	.174	.621	1
2	.086	.103	.140	.147		.153	.158	.127	.149	.067	.019	2
3	.049	.055	.104	.112		.114	.125	.112	.042	-.028	-.037	3
4	.047	.028	.056	.065		.085	.078	.099	-.001	-.027	.015	4
5	.038	.007	.023	.049		.064	.060	.099	-.037	-.106	-.020	5
6	.018	.005	.008	.027		.045	.047	.073	-.111	-.126	-.089	6
7	.013	.001	-.004	.008		.033	.032	.071	-.084		-.102	7
8	.005	-.010	-.018	-.004		.012	.021	.051				8
9	.003	-.022	-.031	-.025		-.003	.015	.044				9
10	-.005	-.025		-.025		-.013	.003	.033				10
11	-.007	-.021		-.029		-.014						11
12	-.008	-.016		-.028		-.011	.001	-.028				12
13	-.009	-.012	-.023	-.031		-.016	-.004	.077				13
14	-.005	-.014	-.025	-.030		-.014	-.010	.041				14
15	-.013	-.035	-.039	-.041		-.036	-.024	-.034				15
16	-.041	-.058	-.081	-.069		-.095	-.077	.134				16
18	-.055	-.078	-.079	-.086		-.079	-.065	-.083				18
19	-.065	-.102	-.108	-.117		-.116	-.110	-.112				19
20	-.077	-.120	-.122	-.129		-.127	-.125	-.112				20
21	-.125	-.120	-.126	-.131		-.129	-.119	-.123				21
22	-.091	-.102	-.123	-.128		-.127	-.120	-.126				22
					α= 0		δ= 0.0					
1	.845	.699	.779	.653		.778	.662	.897	.883	.155	.684	1
2	.081	.103	.136	.156		.154	.157	.202	.167	.062	.043	2
3	.048	.057	.102	.121		.116	.125	.121	.072	-.021	.005	3
4	.044	.028	.053	.074		.086	.079	.079	.024	-.008	.034	4
5	.036	.004	.023	.055		.068	.061	.068	-.011	-.087	-.003	5
6	.016	.004	.007	.030		.048	.050	.049	-.086	-.101	-.066	6
7	.009	.001	-.005	.017		.034	.038	.043	-.065		-.089	7
8	.003	-.010	-.016	.002		.012	.027	.023				8
9	.001	-.024	-.030	-.018		-.002	.022	.017				9
10	-.006	-.022		-.017		-.012	.011	.013				10
11	-.010	-.020		-.019		-.013						11
12	-.011	-.016		-.019		-.009	.007	-.027				12
13	-.013	-.014	-.023	-.019		-.015	.001	.017				13
14	-.007	-.013	-.024	-.021		-.013	-.003	.022				14
15	-.018	-.033	-.039	-.036		-.033	-.014	-.028				15
16	-.043	-.061	-.079	-.060		-.091	-.071	.131				16
18	-.055	-.080	-.077	-.084		-.079	-.059	-.070				18
19	-.065	-.103	-.105	-.114		-.113	-.102	-.101				19
20	-.076	-.118	-.122	-.121		-.119	-.119	-.090				20
21	-.126	-.120	-.122	-.127		-.123	-.118	-.113				21
22	-.090	-.101	-.122	-.135		-.120	-.114	-.118				22
					α= 0		δ= 5.0					
1	.843	.698	.781	.648		.776	.661	.893	.950	.068	.760	1
2	.084	.100	.136	.150		.152	.159	.260	.056	.000	.001	2
3	.048	.056	.101	.110		.112	.124	.227	-.026	-.039	-.006	3
4	.047	.025	.055	.066		.082	.079	.078	-.072	-.038	.014	4
5	.038	.002	.020	.048		.065	.059	.052	-.048	-.112	-.027	5
6	.018	.003	.001	.026		.041	.047	.024	-.106	-.126	-.097	6
7	.010	-.003	-.005	.006		.031	.031	.002	-.080		-.112	7
8	.005	-.013	-.022	.000		.011	.022	-.031				8
9	.002	-.027	-.033	-.024		-.002	.013	-.041				9
10	-.008	-.025		-.026		-.009	.002	-.009				10
11	-.010	-.022		-.030		-.013						11
12	-.011	-.018		-.029		-.011	.000	-.080				12
13	-.012	-.014	-.026	-.030		-.015	-.005	-.022				13
14	-.008	-.015	-.026	-.030		-.013	-.009	-.037				14
15	-.015	-.038	-.040	-.041		-.032	-.025	-.059				15
16	-.045	-.061	-.080	-.068		-.091	-.076	.112				16
18	-.056	-.078	-.080	-.086		-.080	-.063	-.083				18
19	-.066	-.104	-.110	-.117		-.113	-.111	-.107				19
20	-.078	-.122	-.124	-.131		-.126	-.122	-.093				20
21	-.128	-.122	-.126	-.133		-.129	-.116	-.122				21
22	-.093	-.101	-.126	-.136		-.128	-.118	-.122				22

Table 6 Continued

Pressure coefficients on swept wing

Configuration 9 M=2.01 R=3.6 x 10^6

Orif	Station 1	2	3	4	24	5	6	7	8	9	10	Orif
					α= 0		δ= 10.0					
1	.842	.700	.779	.650		.771	.664	.891	.928	.077	.777	1
2	.085	.103	.135	.148		.152	.159	.154	.018	-.005	-.016	2
3	.048	.054	.100	.115		.114	.125	.311	-.041	-.040	-.003	3
4	.046	.028	.054	.066		.084	.080	.135	-.081	-.040	.011	4
5	.038	.004	.023	.049		.065	.060	.081	-.057	-.112	-.033	5
6	.019	.005	.008	.027		.046	.049	.030	-.110	-.127	-.102	6
7	.011	-.003	-.005	.010		.035	.033	-.007	-.087		-.118	7
8	.003	-.011	-.020	-.006		.010	.023	-.044				8
9	.001	-.027	-.031	-.024		-.005	.016	-.064				9
10	-.005	-.026		-.024		-.012	.005	-.025				10
11	-.008	-.020		-.028		-.013						11
12	-.008	-.019		-.029		-.011	.000	-.097				12
13	-.010	-.016	-.025	-.029		-.016	-.003	-.031				13
14	-.004	-.014	-.025	-.030		-.012	-.008	-.049				14
15	-.014	-.037	-.042	-.042		-.036	-.021	-.073				15
16	-.042	-.060	-.080	-.066		-.094	-.076	.096				16
18	-.056	-.079	-.080	-.089		-.083	-.066	-.090				18
19	-.067	-.104	-.111	-.132		-.112	-.109	-.116				19
20	-.077	-.119	-.125	-.129		-.127	-.121	-.098				20
21	-.125	-.118	-.124	-.130		-.129	-.118	-.125				21
22	-.094	-.102	-.125	-.126		-.128	-.117	-.132				22
					α= 0		δ= 20.0					
1	.845	.701	.776	.650		.769	.662	.893	.732	-.159	.726	1
2	.085	.102	.140	.152		.158	.160	.116	-.113	-.076	-.127	2
3	.048	.056	.104	.118		.121	.131	.029	-.128	-.096	-.163	3
4	.046	.027	.057	.073		.090	.085	.068	-.165	-.133	-.075	4
5	.038	.005	.022	.058		.073	.067	.409	-.071	-.172	-.128	5
6	.019	.003	.007	.037		.051	.053	.323	-.139	-.165	-.132	6
7	.012	-.002	-.002	.014		.039	.040	.221	-.115		-.161	7
8	.005	-.011	-.016	-.001		.012	.027	-.065				8
9	.000	-.027	-.029	-.017		-.001	.023	-.105				9
10	-.008	-.024		-.014		-.010	.011	-.076				10
11	-.010	-.019		-.019		-.013						11
12	-.010	-.019		-.019		-.012	.007	-.219				12
13	-.010	-.014	-.022	-.021		-.013	.004	-.152				13
14	-.007	-.015	-.023	-.021		-.012	.002	-.166				14
15	-.015	-.035	-.039	-.035		-.037	-.017	-.164				15
16	-.045	-.059	-.078	-.059		-.093	-.069	.056				16
18	-.057	-.076	-.075	-.077		-.074	-.058	-.189				18
19	-.065	-.101	-.106	-.107		-.107	-.107	-.193				19
20	-.078	-.118	-.122	-.119		-.122	-.114	-.124				20
21	-.124	-.121	-.124	-.120		-.129	-.107	-.167				21
22	-.090	-.101	-.124	-.124		-.128	-.104	-.162				22
					α= 0		δ= 30.0					
1	.839	.698	.778	.646		.773	.664	.895	.455	-.233	.519	1
2	.083	.100	.137	.157		.154	.160	.117	-.173	-.128	-.223	2
3	.047	.053	.101	.114		.116	.126	.027	-.191	-.162	-.240	3
4	.044	.025	.056	.069		.087	.081	.006	-.204	-.214	-.135	4
5	.034	.004	.023	.050		.069	.062	.031	-.175	-.214	-.191	5
6	.018	.000	.006	.033		.048	.049	.620	-.208	-.203	-.197	6
7	.011	-.003	-.004	.012		.034	.032	.592	-.155		-.180	7
8	.003	-.013	-.020	.000		.012	.020	.503				8
9	-.001	-.026	-.032	-.018		-.003	.015	-.077				9
10	-.008	-.024		-.020		-.009	.004	.064				10
11	-.012	-.019		-.022		-.011						11
12	-.012	-.018		-.022		-.010	.000	-.248				12
13	-.012	-.015	-.024	-.021		-.013	-.004	-.194				13
14	-.010	-.014	-.026	-.020		-.010	-.006	-.221				14
15	-.019	-.034	-.042	-.037		-.034	-.022	-.243				15
16	-.050	-.058	-.079	-.065		-.092	-.077	.011				16
18	-.060	-.080	-.079	-.086		-.075	-.065	-.261				18
19	-.068	-.104	-.110	-.116		-.112	-.104	-.255				19
20	-.080	-.119	-.123	-.126		-.123	-.100	-.166				20
21	-.126	-.121	-.125	-.129		-.128	-.087	-.245				21
22	-.095	-.105	-.125	-.131		-.128	-.090	-.183				22

Table 6 Continued

Pressure coefficients on swept wing

Configuration 9 M=2.01 R=3.6 x 10^6

Orif	Station 1	2	3	4	24	5	6	7	8	9	10	Orif
					α= 3		δ= 0.0					
1	.870	.658	.773	.534		.794	.580	.880	.790	.046	.742	1
2	.034	.013	.027	.032		.035	.043	.097	.050	-.002	.021	2
3	-.008	-.018	.012	.016		.014	.033	.051	-.009	-.048	.005	3
4	-.006	-.048	-.027	-.013		-.005	-.001	-.012	-.045	-.047	-.001	4
5	-.017	-.057	-.044	-.031		-.020	-.018	-.018	-.039	-.107	-.035	5
6	-.027	-.058	-.062	-.042		-.030	-.032	-.037	-.111	-.112	-.106	6
7	-.037	-.060	-.070	-.054		-.040	-.043	-.046	-.087		-.122	7
8	-.038	-.064	-.085	-.068		-.055	-.053	-.060				8
9	-.047	-.077	-.091	-.086		-.068	-.057	-.060				9
10	-.052	-.073		-.083		-.072	-.066	-.042				10
11	-.053	-.066		-.088		-.075						11
12	-.057	-.067		-.088		-.072	-.066	-.098				12
13	-.059	-.065	-.079	-.090		-.073	-.066	-.076				13
14	-.054	-.064	-.080	-.091		-.072	-.068	-.085				14
15	-.061	-.081	-.091	-.100		-.094	-.080	-.083				15
16	-.091	-.095	-.120	-.118		-.138	-.118	.091				16
18	-.092	-.116	-.123	-.135		-.131	-.119	-.124				18
19	-.110	-.139	-.149	-.161		-.159	-.156	-.151				19
20	-.116	-.153	-.159	-.169		-.169	-.170	-.124				20
21	-.152	-.153	-.160	-.173		-.172	-.167	-.158				21
22	-.107	-.134	-.162	-.209		-.171	-.165	-.160				22
					α= 6		δ= -30.0					
1	.901	.612	.709	.385		.810	.448	.920	1.137	.595	.022	1
2	-.007	-.056	-.047	-.051		-.053	-.047	-.017	.877	.365	.326	2
3	-.056	-.076	-.059	-.057		-.064	-.051	-.024	.442	-.024	.133	3
4	-.052	-.109	-.087	-.084		-.082	-.083	-.060	-.181	-.006	-.006	4
5	-.057	-.111	-.105	-.092		-.086	-.087	-.055	-.114	-.035	.009	5
6	-.067	-.102	-.114	-.104		-.093	-.096	.020	-.088	-.044	-.054	6
7	-.075	-.102	-.122	-.114		-.104	-.109	-.030	-.038		-.069	7
8	-.075	-.104	-.136	-.124		-.117	-.118	-.096				8
9	-.087	-.114	-.146	-.138		-.125	-.121	-.172				9
10	-.087	-.110		-.137		-.128	-.128	-.144				10
11	-.090	-.106		-.140		-.129						11
12	-.090	-.104		-.140		-.125	-.129	-.211				12
13	-.093	-.102	-.130	-.139		-.130	-.127	-.117				13
14	-.089	-.101	-.126	-.142		-.129	-.127	-.137				14
15	-.094	-.114	-.135	-.151		-.142	-.137	-.175				15
16	-.121	-.119	-.155	-.161		-.179	-.155	.033				16
18	-.127	-.144	-.160	-.180		-.179	-.168	-.196				18
19	-.137	-.167	-.184	-.204		-.199	-.199	-.213				19
20	-.142	-.179	-.194	-.213		-.210	-.207	-.157				20
21	-.183	-.179	-.193	-.215		-.212	-.208	-.232				21
22	-.121	-.138	-.186	-.195		-.210	-.194	-.235				22
					α= 6		δ= -20.0					
1	.894	.611	.708	.392		.811	.456	.924	1.135	.314	.271	1
2	-.006	-.054	-.046	-.045		-.040	-.040	-.006	.557	.178	.143	2
3	-.053	-.068	.057	.051		.054	.042	.015	.353	.097	.022	3
4	-.052	-.106	-.086	-.077		-.076	-.072	-.048	-.153	-.074	-.024	4
5	-.059	-.109	-.099	-.089		-.079	-.079	.013	-.123	-.107	-.013	5
6	-.065	-.102	-.114	-.099		-.090	-.090	-.039	-.135	-.112	-.083	6
7	-.073	-.104	-.119	-.110		-.100	-.100	-.102	-.076		-.108	7
8	-.074	-.107	-.129	-.120		-.106	-.111	-.156				8
9	-.086	-.113	-.140	-.134		-.116	-.115	-.189				9
10	-.089	-.112		-.134		-.123	-.123	-.127				10
11	-.090	-.105		-.137		-.125						11
12	-.091	-.102		-.137		-.119	-.123	-.171				12
13	-.091	-.103	-.124	-.137		-.123	-.123	-.103				13
14	-.089	-.101	-.119	-.140		-.121	-.121	-.123				14
15	-.094	-.115	-.129	-.147		-.139	-.129	-.143				15
16	-.118	-.122	-.149	-.158		-.166	-.149	.052				16
18	-.123	-.144	-.153	-.177		-.168	-.159	-.171				18
19	-.134	-.167	-.177	-.202		-.191	-.186	-.180				19
20	-.142	-.179	-.188	-.211		-.198	-.194	-.137				20
21	-.181	-.180	-.184	-.212		-.204	-.194	-.200				21
22	-.122	-.141	-.180	-.188		-.200	-.191	-.221				22

Table 6 Continued

Pressure coefficients on swept wing

Configuration 9 M=2.01 R=3.6 x 10^6

Orif	Station 1	2	3	4	24	5	6	7	8	9	10	Orif
					α= 6		δ= -10.0					
1	.893	.614	.708	.386		.816	.449	.918	1.090	.098	.617	1
2	-.006	-.057	-.046	-.048		-.052	-.045	-.013	.210	-.027	.008	2
3	-.054	-.071	-.057	-.054		-.063	-.046	.029	-.189	-.100	-.010	3
4	-.054	-.110	-.084	-.079		-.082	-.079	-.029	-.107	-.072	-.032	4
5	-.060	-.112	-.102	-.089		-.086	-.086	-.062	-.091	-.134	-.044	5
6	-.070	-.103	-.113	-.099		-.094	-.093	-.085	-.158	-.149	-.135	6
7	-.075	-.107	-.120	-.111		-.105	-.106	-.089	-.093		-.167	7
8	-.075	-.111	-.133	-.119		-.117	-.114	-.094				8
9	-.089	-.120	-.141	-.133		-.124	-.117	-.094				9
10	-.091	-.111		-.134		-.126	-.123	-.067				10
11	-.091	-.106		-.136		-.129						11
12	-.091	-.106		-.138		-.125	-.123	-.149				12
13	-.094	-.102	-.126	-.138		-.129	-.124	-.154				13
14	-.089	-.101	-.122	-.140		-.127	-.125	-.142				14
15	-.095	-.114	-.133	-.146		-.138	-.132	-.135				15
16	-.119	-.121	-.152	-.154		-.175	-.154	.060				16
18	-.129	-.147	-.154	-.170		-.171	-.167	-.169				18
19	-.140	-.165	-.179	-.194		-.196	-.197	-.184				19
20	-.142	-.179	-.187	-.204		-.206	-.202	-.139				20
21	-.185	-.179	-.190	-.212		-.210	-.204	-.193				21
22	-.123	-.137	-.180	-.193		-.208	-.195	-.219				22
					α= 6		δ= - 5.0					
1	.897	.612	.711	.391		.814	.450	.919	1.037	-.006	.724	1
2	-.009	-.057	-.047	-.049		-.047	-.043	.030	-.195	-.074	-.009	2
3	-.054	-.075	-.056	-.051		-.058	-.045	.009	-.097	-.104	-.039	3
4	-.055	-.111	-.085	-.080		-.076	-.076	-.083	-.111	-.084	-.034	4
5	-.062	-.110	-.097	-.088		-.082	-.085	-.071	-.100	-.159	-.074	5
6	-.069	-.104	-.116	-.099		-.088	-.091	-.082	-.162	-.179	-.172	6
7	-.075	-.105	-.120	-.109		-.100	-.103	-.092	-.103		-.190	7
8	-.074	-.108	-.132	-.120		-.115	-.115	-.114				8
9	-.086	-.116	-.140	-.134		-.121	-.116	-.122				9
10	-.090	-.112		-.134		-.125	-.124	-.106				10
11	-.092	-.108		-.136		-.124						11
12	-.091	-.104		-.136		-.122	-.122	-.138				12
13	-.093	-.102	-.125	-.137		-.124	-.122	-.153				13
14	-.089	-.101	-.122	-.140		-.124	-.120	-.144				14
15	-.096	-.116	-.130	-.147		-.138	-.132	-.135				15
16	-.125	-.120	-.148	-.157		-.173	-.155	.060				16
18	-.125	-.145	-.155	-.178		-.173	-.166	-.171				18
19	-.137	-.166	-.180	-.204		-.195	-.195	-.193				19
20	-.144	-.179	-.189	-.212		-.205	-.203	-.159				20
21	-.182	-.179	-.188	-.213		-.208	-.201	-.190				21
22	-.125	-.137	-.180	-.194		-.205	-.197	-.209				22
					α= 6		δ= 0.0					
1	.897	.613	.713	.389		.810	.455	.920	.732	-.017	.771	1
2	-.004	-.053	-.040	-.044		-.042	-.043	.006	.000	-.055	-.020	2
3	-.052	-.073	-.053	-.052		-.055	-.046	-.040	-.048	-.092	-.031	3
4	-.051	-.106	-.081	-.078		-.073	-.075	-.073	-.091	-.076	-.036	4
5	-.057	-.110	-.094	-.085		-.078	-.082	-.088	-.081	-.146	-.098	5
6	-.065	-.102	-.108	-.093		-.086	-.092	-.102	-.138	-.157	-.162	6
7	-.072	-.103	-.113	-.105		-.097	-.103	-.110	-.095		-.162	7
8	-.075	-.105	-.124	-.117		-.101	-.114	-.116				8
9	-.086	-.115	-.135	-.131		-.117	-.116	-.119				9
10	-.087	-.108		-.127		-.120	-.119	-.106				10
11	-.088	-.102		-.132		-.121						11
12	-.092	-.100		-.133		-.117	-.121	-.116				12
13	-.092	-.098	-.119	-.134		-.121	-.120	-.132				13
14	-.088	-.098	-.118	-.136		-.122	-.123	-.131				14
15	-.092	-.109	-.126	-.145		-.136	-.127	-.129				15
16	-.120	-.119	-.146	-.153		-.169	-.150	.066				16
18	-.123	-.144	-.150	-.171		-.172	-.155	-.160				18
19	-.135	-.164	-.173	-.196		-.194	-.190	-.180				19
20	-.139	-.175	-.183	-.206		-.200	-.199	-.131				20
21	-.177	-.175	-.182	-.204		-.202	-.196	-.187				21
22	-.121	-.136	-.175	-.182		-.201	-.195	-.183				22

Table 6 Continued

Pressure coefficients on swept wing

Configuration 9 M= 2.01 R=3.6 x 10^6

Orif	Station 1	2	3	4	24	5	6	7	8	9	10	Orif
					α= 6	δ= 5.0						
1	.896	.612	.707	.383		.811	.456	.926	.814	-.073	.806	1
2	-.008	-.057	-.045	-.048		-.041	-.042	.202	-.042	-.088	-.078	2
3	-.054	-.075	-.056	-.053		-.054	-.045	-.016	-.101	-.112	-.084	3
4	-.052	-.109	-.081	-.081		-.070	-.080	-.163	-.129	-.098	-.088	4
5	-.059	-.111	-.101	-.089		-.075	-.084	-.169	-.111	-.166	-.168	5
6	-.067	-.103	-.112	-.098		-.086	-.090	-.163	-.162	-.182	-.203	6
7	-.076	-.106	-.120	-.110		-.093	-.106	-.153	-.099		-.189	7
8	-.077	-.106	-.132	-.121		-.113	-.116	-.149				8
9	-.086	-.114	-.144	-.136		-.119	-.117	-.146				9
10	-.087	-.112		-.133		-.124	-.123	-.114				10
11	-.092	-.107		-.135		-.126						11
12	-.091	-.102		-.138		-.121	-.122	-.135				12
13	-.098	-.102	-.126	-.137		-.126	-.121	-.139				13
14	-.087	-.099	-.121	-.139		-.122	-.123	-.135				14
15	-.098	-.114	-.130	-.148		-.138	-.130	-.131				15
16	-.123	-.119	-.151	-.154		-.171	-.156	.069				16
18	-.126	-.147	-.155	-.175		-.172	-.164	-.171				18
19	-.139	-.164	-.175	-.193		-.193	-.194	-.192				19
20	-.142	-.178	-.190	-.202		-.200	-.201	-.139				20
21	-.182	-.181	-.191	-.203		-.204	-.201	-.196				21
22	-.124	-.139	-.180	-.192		-.202	-.197	-.194				22
					α= 6	δ= 10.0						
1	.899	.614	.713	.384		.808	.455	.926	.805	-.135	.796	1
2	.001	-.053	-.040	-.049		-.051	-.043	.004	-.082	-.106	-.141	2
3	-.048	-.074	-.052	-.054		-.060	-.048	.295	-.136	-.134	-.160	3
4	-.047	-.107	-.082	-.083		-.072	-.076	.169	-.165	-.131	-.136	4
5	-.052	-.109	-.100	-.089		-.076	-.087	-.123	-.105	-.188	-.208	5
6	-.064	-.099	-.112	-.101		-.084	-.092	-.247	-.164	-.195	-.226	6
7	-.072	-.101	-.121	-.111		-.094	-.105	-.226	-.114		-.203	7
8	-.072	-.103	-.135	-.122		-.115	-.116	-.207				8
9	-.083	-.114	-.142	-.138		-.121	-.118	-.196				9
10	-.085	-.108		-.138		-.125	-.127	-.150				10
11	-.087	-.102		-.141		-.127						11
12	-.086	-.101		-.144		-.129	-.125	-.173				12
13	-.090	-.098	-.127	-.142		-.129	-.127	-.193				13
14	-.084	-.098	-.123	-.144		-.127	-.129	-.191				14
15	-.090	-.110	-.132	-.155		-.139	-.135	-.158				15
16	-.121	-.117	-.151	-.159		-.176	-.163	.051				16
18	-.121	-.141	-.157	-.179		-.177	-.166	-.210				18
19	-.134	-.162	-.177	-.196		-.198	-.197	-.206				19
20	-.137	-.176	-.191	-.207		-.211	-.204	-.146				20
21	-.180	-.176	-.192	-.208		-.211	-.199	-.204				21
22	-.119	-.136	-.182	-.193		-.209	-.197	-.191				22
					α= 6	δ= 20.0						
1	.900	.613	.708	.386		.817	.456	.925	.555	-.208	.694	1
2	-.009	-.058	-.046	-.045		-.051	-.043	-.008	-.159	-.141	-.208	2
3	-.056	-.079	-.059	-.051		-.061	-.044	-.010	-.173	-.167	-.221	3
4	-.055	-.113	-.087	-.077		-.081	-.076	.004	-.206	-.193	-.169	4
5	-.062	-.114	-.101	-.084		-.083	-.085	.502	-.153	-.223	-.234	5
6	-.070	-.106	-.109	-.097		-.090	-.096	.436	-.172	-.212	-.236	6
7	-.075	-.106	-.117	-.108		-.099	-.104	.310	-.134		-.202	7
8	-.077	-.108	-.131	-.117		-.111	-.115	-.268				8
9	-.090	-.119	-.141	-.132		-.118	-.116	-.260				9
10	-.093	-.115		-.133		-.120	-.122	-.244				10
11	-.094	-.110		-.139		-.122						11
12	-.095	-.105		-.135		-.120	-.121	-.199				12
13	-.095	-.104	-.124	-.135		-.123	-.121	-.128				13
14	-.092	-.101	-.120	-.136		-.122	-.123	-.159				14
15	-.098	-.116	-.129	-.145		-.136	-.133	-.240				15
16	-.127	-.122	-.148	-.153		-.171	-.159	.009				16
18	-.130	-.147	-.155	-.176		-.172	-.162	-.268				18
19	-.141	-.168	-.177	-.200		-.196	-.188	-.261				19
20	-.144	-.181	-.187	-.211		-.206	-.185	-.163				20
21	-.186	-.178	-.188	-.212		-.206	-.182	-.230				21
22	-.124	-.140	-.181	-.193		-.204	-.183	-.208				22

Table 6 Continued

Pressure coefficients on swept wing

Configuration 9 M= 2.01 R= 3.6 x 10^6

Orif	Station 1	2	3	4	24	5	6	7	8	9	10	Orif
					α= 6		δ= 30.0					
1	.900	.616	.713	.389		.813	.458	.922	.284	-.253	.495	1
2	-.007	-.050	-.044	-.048		-.050	-.041	-.008	-.195	-.181	-.245	2
3	-.054	-.071	-.054	-.054		-.060	-.043	-.015	-.207	-.194	-.259	3
4	-.054	-.102	-.080	-.080		-.078	-.075	-.044	-.239	-.232	-.188	4
5	-.058	-.105	-.102	-.090		-.083	-.075	.015	-.206	-.233	-.260	5
6	-.067	-.096	-.116	-.100		-.089	-.087	.843	-.212	-.231	-.247	6
7	-.072	-.101	-.121	-.111		-.102	-.097	.794	-.156		-.210	7
8	-.074	-.101	-.133	-.119		-.112	-.108	.576				8
9	-.086	-.109	-.142	-.133		-.118	-.110	-.280				9
10	-.087	-.104		-.135		-.124	-.116	-.276				10
11	-.088	-.101		-.139		-.123						11
12	-.090	-.099		-.140		-.118	-.114	-.248				12
13	-.092	-.093	-.128	-.141		-.125	-.110	-.122				13
14	-.087	-.091	-.123	-.142		-.121	-.115	-.181				14
15	-.094	-.106	-.131	-.150		-.137	-.122	-.270				15
16	-.123	-.117	-.149	-.158		-.173	-.149	-.002				16
18	-.127	-.144	-.157	-.178		-.168	-.154	-.294				18
19	-.137	-.161	-.179	-.202		-.188	-.162	-.293				19
20	-.142	-.171	-.191	-.212		-.201	-.162	-.181				20
21	-.178	-.171	-.190	-.214		-.208	-.167	-.265				21
22	-.121	-.136	-.183	-.194		-.204	-.179	-.230				22
					α= 9		δ= 0.0					
1	.932	.518	.590	.237		.804	.319	.969	.628	-.135	.761	1
2	-.041	-.109	-.109	-.114		-.121	-.120	-.128	-.118	-.146	-.124	2
3	-.089	-.131	-.112	-.114		-.123	-.117	-.162	-.142	-.159	-.142	3
4	-.087	-.152	-.136	-.134		-.137	-.143	-.172	-.178	-.143	-.139	4
5	-.088	-.161	-.147	-.145		-.143	-.146	-.182	-.159	-.214	-.253	5
6	-.097	-.152	-.155	-.149		-.147	-.149	-.183	-.199	-.233	-.259	6
7	-.104	-.140	-.162	-.154		-.152	-.161	-.188	-.132		-.252	7
8	-.104	-.141	-.174	-.162		-.165	-.168	-.194				8
9	-.115	-.146	-.182	-.177		-.171	-.169	-.194				9
10	-.117	-.141		-.174		-.174	-.174	-.172				10
11	-.118	-.135		-.179		-.175						11
12	-.117	-.125		-.175		-.172	-.174	-.215				12
13	-.118	-.129	-.178	-.175		-.175	-.174	-.183				13
14	-.118	-.127	-.166	-.180		-.171	-.174	-.183				14
15	-.121	-.138	-.171	-.189		-.183	-.183	-.190				15
16	-.147	-.139	-.185	-.190		-.210	-.197	.052				16
18	-.146	-.165	-.192	-.213		-.212	-.211	-.222				18
19	-.162	-.183	-.210	-.237		-.232	-.235	-.231				19
20	-.160	-.196	-.220	-.245		-.243	-.243	-.165				20
21	-.195	-.195	-.217	-.249		-.244	-.243	-.232				21
22	-.128	-.110	-.157	-.198		-.229	-.222	-.198				22
					α= 12		δ= -30.0					
1	.943	.412	.446	.077		.770	.217	1.024	1.160	.600	.133	1
2	-.073	-.150	-.153	-.161		-.170	-.174	-.161	.902	.382	.286	2
3	-.111	-.168	-.159	-.161		-.167	-.167	-.165	.580	-.176	.096	3
4	-.110	-.184	-.176	-.173		-.174	-.178	-.172	-.265	-.139	-.027	4
5	-.114	-.192	-.186	-.180		-.178	-.182	-.195	-.215	-.163	-.078	5
6	-.122	-.195	-.191	-.187		-.181	-.184	-.240	-.201	-.133	-.130	6
7	-.127	-.180	-.194	-.190		-.188	-.191	-.274	-.092		-.157	7
8	-.130	-.172	-.203	-.196		-.197	-.195	-.274				8
9	-.137	-.172	-.210	-.206		-.202	-.196	-.264				9
10	-.140	-.167		-.203		-.205	-.199	-.267				10
11	-.143	-.159		-.203		-.204						11
12	-.140	-.140		-.203		-.200	-.200	-.253				12
13	-.142	-.153	-.210	-.204		-.201	-.199	-.225				13
14	-.140	-.150	-.208	-.205		-.198	-.200	-.231				14
15	-.142	-.160	-.209	-.211		-.206	-.203	-.222				15
16	-.164	-.161	-.217	-.214		-.225	-.210	.026				16
18	-.165	-.184	-.221	-.231		-.232	-.228	-.228				18
19	-.175	-.201	-.230	-.251		-.247	-.249	-.247				19
20	-.175	-.212	-.233	-.256		-.254	-.254	-.168				20
21	-.213	-.211	-.231	-.259		-.257	-.251	-.263				21
22	-.138	-.112	-.139	-.180		-.234	-.179	-.268				22

Table 6 Continued

Pressure coefficients on swept wing

Configuration 9 M=2.01 R=3.6 x 10^6

Orif	Station 1	2	3	4	24	5	6	7	8	9	10	Orif
					α= 12		δ= -20.0					
1	.945	.417	.445	.078		.768	.219	1.019	1.118	.301	.433	1
2	-.072	-.149	-.149	-.165		-.172	-.174	-.162	.620	.097	.109	2
3	-.111	-.167	-.155	-.163		-.171	-.167	-.171	.399	-.215	.042	3
4	-.110	-.182	-.170	-.175		-.179	-.179	-.164	-.231	-.137	-.038	4
5	-.110	-.189	-.186	-.186		-.182	-.184	-.236	-.187	-.190	-.165	5
6	-.120	-.192	-.192	-.191		-.186	-.185	-.269	-.210	-.191	-.229	6
7	-.126	-.177	-.197	-.194		-.190	-.194	-.277	-.121		-.259	7
8	-.128	-.170	-.205	-.198		-.198	-.196	-.272				8
9	-.136	-.170	-.212	-.208		-.202	-.199	-.261				9
10	-.140	-.162		-.204		-.203	-.200	-.249				10
11	-.140	-.156		-.207		-.202						11
12	-.138	-.147		-.205		-.200	-.201	-.228				12
13	-.140	-.150	-.213	-.206		-.201	-.200	-.219				13
14	-.137	-.147	-.210	-.209		-.198	-.201	-.217				14
15	-.141	-.157	-.211	-.215		-.207	-.205	-.211				15
16	-.164	-.158	-.219	-.217		-.225	-.213	.043				16
18	-.164	-.181	-.223	-.234		-.233	-.228	-.239				18
19	-.173	-.197	-.230	-.251		-.248	-.249	-.244				19
20	-.174	-.206	-.236	-.259		-.255	-.255	-.164				20
21	-.212	-.206	-.234	-.261		-.257	-.251	-.251				21
22	-.136	-.109	-.140	-.183		-.234	-.196	-.273				22
					α= 12		δ= -10.0					
1	.944	.413	.443	.081		.768	.213	1.023	1.028	.014	.765	1
2	-.075	-.152	-.155	-.161		-.170	-.176	-.157	.189	-.163	.003	2
3	-.113	-.169	-.161	-.162		-.168	-.168	-.175	-.247	-.191	-.043	3
4	-.112	-.185	-.176	-.172		-.176	-.179	-.223	-.184	-.125	-.092	4
5	-.115	-.194	-.184	-.180		-.179	-.183	-.239	-.145	-.206	-.240	5
6	-.122	-.197	-.190	-.187		-.183	-.186	-.244	-.218	-.233	-.275	6
7	-.129	-.182	-.195	-.191		-.188	-.193	-.237	-.146		-.258	7
8	-.131	-.173	-.202	-.195		-.199	-.197	-.196				8
9	-.140	-.173	-.210	-.205		-.203	-.199	-.196				9
10	-.142	-.167		-.200		-.205	-.200	-.174				10
11	-.142	-.161		-.203		-.204						11
12	-.141	-.148		-.203		-.202	-.200	-.201				12
13	-.142	-.154	-.210	-.203		-.202	-.201	-.207				13
14	-.141	-.153	-.207	-.204		-.199	-.201	-.210				14
15	-.144	-.162	-.209	-.212		-.207	-.203	-.220				15
16	-.167	-.163	-.215	-.214		-.225	-.212	.030				16
18	-.167	-.187	-.221	-.231		-.234	-.227	-.252				18
19	-.177	-.203	-.229	-.251		-.250	-.249	-.243				19
20	-.176	-.214	-.233	-.258		-.255	-.255	-.162				20
21	-.213	-.213	-.231	-.259		-.258	-.251	-.234				21
22	-.138	-.115	-.138	-.181		-.236	-.214	-.261				22
					α= 12		δ= - 5.0					
1	.945	.413	.448	.075		.767	.221	1.022	.979	-.161	.773	1
2	-.072	-.150	-.150	-.163		-.170	-.172	-.149	-.223	-.213	-.108	2
3	-.111	-.166	-.156	-.164		-.169	-.164	-.191	-.200	-.182	-.161	3
4	-.110	-.183	-.172	-.174		-.176	-.175	-.187	-.194	-.171	-.152	4
5	-.113	-.190	-.188	-.182		-.180	-.180	-.185	-.171	-.239	-.278	5
6	-.122	-.195	-.194	-.189		-.182	-.183	-.182	-.225	-.258	-.266	6
7	-.126	-.180	-.197	-.192		-.187	-.191	-.179	-.146		-.255	7
8	-.129	-.171	-.203	-.197		-.196	-.194	-.193				8
9	-.136	-.171	-.211	-.207		-.200	-.195	-.213				9
10	-.140	-.164		-.203		-.201	-.199	-.198				10
11	-.140	-.159		-.205		-.201						11
12	-.140	-.147		-.204		-.199	-.198	-.224				12
13	-.140	-.152	-.211	-.204		-.200	-.199	-.199				13
14	-.140	-.149	-.208	-.206		-.197	-.198	-.208				14
15	-.142	-.160	-.210	-.213		-.205	-.199	-.219				15
16	-.165	-.160	-.218	-.214		-.224	-.207	.029				16
18	-.164	-.183	-.221	-.232		-.232	-.224	-.247				18
19	-.174	-.199	-.231	-.250		-.248	-.242	-.248				19
20	-.173	-.209	-.235	-.257		-.253	-.248	-.174				20
21	-.211	-.209	-.233	-.259		-.255	-.248	-.241				21
22	-.135	-.111	-.140	-.182		-.232	-.221	-.233				22

Table 6 Continued

Pressure coefficients on swept wing

Configuration 9 M=2.01 R=3.6 x 10^6

Orif	Station 1	2	3	4	24	5	6	7	8	9	10	Orif
					α= 12		δ= 0.0					
1	.942	.412	.445	.078		.769	.219	1.022	.531	-.106	.728	1
2	-.072	-.143	-.141	-.156		-.155	-.160	-.172	-.082	-.113	-.105	2
3	-.109	-.159	-.152	-.158		-.155	-.154	-.181	-.101	-.128	-.130	3
4	-.108	-.173	-.169	-.167		-.163	-.161	-.189	-.114	-.135	-.126	4
5	-.110	-.183	-.181	-.172		-.167	-.166	-.197	-.112	-.178	-.180	5
6	-.119	-.187	-.186	-.180		-.171	-.172	-.197	-.162	-.184	-.176	6
7	-.124	-.172	-.188	-.181		-.176	-.177	-.189	-.121		-.181	7
8	-.128	-.166	-.196	-.184		-.187	-.175	-.192				8
9	-.136	-.166	-.203	-.196		-.191	-.177	-.189				9
10	-.140	-.160		-.190		-.189	-.179	-.181				10
11	-.139	-.154		-.192		-.187						11
12	-.137	-.150		-.194		-.186	-.178	-.225				12
13	-.138	-.147	-.201	-.196		-.185	-.182	-.189				13
14	-.136	-.145	-.200	-.195		-.185	-.184	-.193				14
15	-.140	-.156	-.201	-.197		-.195	-.183	-.190				15
16	-.162	-.159	-.209	-.206		-.206	-.193	.025				16
18	-.163	-.180	-.207	-.213		-.220	-.208	-.216				18
19	-.171	-.196	-.215	-.225		-.231	-.224	-.226				19
20	-.172	-.204	-.219	-.233		-.231	-.229	-.140				20
21	-.206	-.205	-.217	-.235		-.233	-.226	-.224				21
22	-.136	-.113	-.140	-.182		-.220	-.210	-.186				22
					α= 12		δ= 5.0					
1	.942	.413	.443	.079		.770	.221	1.019	.633	-.149	.693	1
2	-.076	-.153	-.150	-.163		-.163	-.171	.006	-.113	-.147	-.145	2
3	-.116	-.166	-.156	-.160		-.163	-.163	-.206	-.137	-.150	-.176	3
4	-.114	-.182	-.172	-.172		-.171	-.173	-.241	-.156	-.155	-.154	4
5	-.116	-.193	-.184	-.178		-.173	-.177	-.238	-.137	-.200	-.215	5
6	-.124	-.197	-.188	-.185		-.177	-.182	-.233	-.171	-.203	-.209	6
7	-.129	-.180	-.192	-.187		-.181	-.188	-.224	-.131		-.208	7
8	-.132	-.172	-.200	-.191		-.196	-.190	-.222				8
9	-.140	-.172	-.208	-.201		-.199	-.191	-.218				9
10	-.143	-.165		-.199		-.199	-.192	-.201				10
11	-.145	-.160		-.199		-.199						11
12	-.143	-.149		-.197		-.197	-.195	-.245				12
13	-.144	-.152	-.206	-.199		-.197	-.196	-.211				13
14	-.141	-.150	-.205	-.200		-.196	-.197	-.208				14
15	-.145	-.161	-.205	-.206		-.203	-.198	-.203				15
16	-.169	-.161	-.212	-.210		-.218	-.207	.031				16
18	-.168	-.182	-.215	-.222		-.229	-.224	-.228				18
19	-.172	-.199	-.224	-.236		-.242	-.239	-.241				19
20	-.172	-.208	-.226	-.243		-.246	-.245	-.159				20
21	-.174	-.208	-.225	-.244		-.248	-.243	-.237				21
22	-.141	-.112	-.139	-.179		-.229	-.225	-.201				22
					α= 12		δ= 10.0					
1	.940	.412	.444	.080		.767	.216	1.021	.586	-.184	.671	1
2	-.075	-.154	-.154	-.163		-.171	-.176	-.136	-.138	-.177	-.190	2
3	-.115	-.170	-.158	-.160		-.169	-.169	.153	-.158	-.174	-.212	3
4	-.113	-.187	-.175	-.173		-.177	-.179	.178	-.174	-.186	-.176	4
5	-.115	-.195	-.186	-.181		-.180	-.184	-.147	-.146	-.224	-.242	5
6	-.123	-.197	-.190	-.189		-.185	-.186	-.273	-.191	-.217	-.230	6
7	-.130	-.183	-.195	-.192		-.191	-.192	-.263	-.146		-.223	7
8	-.131	-.173	-.202	-.195		-.197	-.196	-.253				8
9	-.140	-.175	-.210	-.206		-.201	-.198	-.246				9
10	-.143	-.167		-.201		-.203	-.199	-.235				10
11	-.143	-.160		-.204		-.202						11
12	-.142	-.152		-.203		-.200	-.199	-.226				12
13	-.144	-.155	-.211	-.204		-.200	-.200	-.233				13
14	-.141	-.152	-.208	-.205		-.199	-.201	-.222				14
15	-.145	-.161	-.208	-.212		-.208	-.203	-.222				15
16	-.169	-.162	-.217	-.216		-.224	-.212	.028				16
18	-.169	-.185	-.220	-.229		-.232	-.227	-.248				18
19	-.179	-.201	-.227	-.246		-.248	-.245	-.249				19
20	-.180	-.211	-.232	-.252		-.252	-.249	-.157				20
21	-.216	-.212	-.229	-.252		-.255	-.246	-.246				21
22	-.140	-.113	-.140	-.182		-.234	-.228	-.216				22

Table 6 Concluded

Pressure coefficients on swept wing

Configuration 9 M=2.01 R=3.6 x 10^6

Orif	Station 1	2	3	4	24	5	6	7	8	9	10	Orif
						α= 12	δ= 20.0					
1	.941	.414	.442	.078		.767	.217	1.019	.320	-.238	.522	1
2	-.072	-.151	-.154	-.163		-.172	-.176	-.139	-.191	-.230	-.240	2
3	-.111	-.169	-.159	-.163		-.171	-.168	-.149	-.206	-.203	-.258	3
4	-.111	-.184	-.174	-.174		-.178	-.177	-.049	-.229	-.233	-.196	4
5	-.113	-.195	-.185	-.183		-.181	-.182	.869	-.178	-.250	-.268	5
6	-.122	-.197	-.191	-.190		-.186	-.185	.586	-.227	-.244	-.254	6
7	-.128	-.182	-.195	-.192		-.190	-.195	.304	-.167		-.218	7
8	-.129	-.172	-.204	-.196		-.196	-.197	-.292				8
9	-.137	-.172	-.211	-.208		-.203	-.199	-.290				9
10	-.140	-.167		-.203		-.203	-.203	-.289				10
11	-.142	-.159		-.205		-.202						11
12	-.141	-.151		-.205		-.199	-.202	-.244				12
13	-.140	-.153	-.211	-.205		-.201	-.201	-.220				13
14	-.139	-.151	-.209	-.207		-.199	-.203	-.229				14
15	-.143	-.160	-.209	-.214		-.208	-.201	-.253				15
16	-.169	-.161	-.217	-.217		-.225	-.209	.020				16
18	-.166	-.184	-.222	-.232		-.232	-.213	-.266				18
19	-.176	-.199	-.231	-.250		-.249	-.226	-.274				19
20	-.178	-.210	-.234	-.256		-.255	-.234	-.176				20
21	-.213	-.209	-.232	-.259		-.256	-.240	-.251				21
22	-.138	-.113	-.140	-.186		-.235	-.225	-.221				22
						α= 12	δ= 30.0					
1	.943	.412	.443	.082		.765	.223	1.020	.132	-.268	.260	1
2	-.075	-.151	-.151	-.164		-.167	-.172	-.111	-.216	-.261	-.263	2
3	-.112	-.168	-.156	-.161		-.166	-.164	-.121	-.229	-.241	-.273	3
4	-.111	-.184	-.172	-.172		-.172	-.175	-.082	-.230	-.260	-.196	4
5	-.112	-.191	-.186	-.180		-.177	-.180	-.014	-.223	-.262	-.280	5
6	-.121	-.195	-.191	-.187		-.180	-.185	1.009	-.248	-.265	-.250	6
7	-.127	-.180	-.195	-.190		-.185	-.191	.937	-.170		-.219	7
8	-.129	-.172	-.204	-.194		-.198	-.194	.648				8
9	-.138	-.172	-.211	-.205		-.203	-.197	-.301				9
10	-.140	-.167		-.202		-.203	-.199	-.304				10
11	-.141	-.161		-.202		-.203						11
12	-.140	-.147		-.202		-.199	-.199	-.269				12
13	-.142	-.152	-.210	-.203		-.202	-.199	-.172				13
14	-.139	-.149	-.208	-.204		-.198	-.173	-.203				14
15	-.143	-.161	-.208	-.212		-.207	-.148	-.259				15
16	-.168	-.160	-.217	-.214		-.226	-.177	.021				16
18	-.167	-.184	-.221	-.231		-.232	-.170	-.262				18
19	-.177	-.201	-.229	-.249		-.248	-.204	-.251				19
20	-.177	-.210	-.233	-.256		-.253	-.221	-.164				20
21	-.212	-.208	-.232	-.258		-.257	-.231	-.229				21
22	-.137	-.111	-.138	-.182		-.234	-.231	-.210				22
						α= 15	δ= 0.0					
1	.965	.304	.251	-.077		.655	.086	.906	.315	-.170	.647	1
2	-.105	-.200	-.200	-.219		-.224	-.234	-.271	-.140	-.163	-.167	2
3	-.132	-.206	-.203	-.214		-.217	-.221	-.260	-.149	-.199	-.202	3
4	-.138	-.218	-.213	-.218		-.219	-.222	-.258	-.219	-.195	-.181	4
5	-.142	-.226	-.225	-.222		-.221	-.222	-.265	-.201	-.233	-.259	5
6	-.149	-.230	-.226	-.225		-.225	-.225	-.264	-.225	-.233	-.250	6
7	-.153	-.228	-.229	-.227		-.226	-.228	-.258	-.143		-.261	7
8	-.153	-.223	-.236	-.229		-.232	-.231	-.257				8
9	-.163	-.217	-.242	-.239		-.236	-.231	-.254				9
10	-.167	-.198		-.235		-.236	-.233	-.236				10
11	-.167	-.186		-.237		-.234						11
12	-.165	-.174		-.237		-.232	-.232	-.283				12
13	-.165	-.181	-.241	-.237		-.232	-.232	-.265				13
14	-.167	-.178	-.241	-.237		-.230	-.234	-.261				14
15	-.169	-.186	-.245	-.239		-.237	-.235	-.249				15
16	-.189	-.187	-.251	-.243		-.246	-.235	.018				16
18	-.190	-.205	-.255	-.254		-.258	-.253	-.274				18
19	-.198	-.220	-.263	-.267		-.269	-.267	-.272				19
20	-.200	-.228	-.262	-.273		-.272	-.271	-.175				20
21	-.233	-.226	-.258	-.275		-.275	-.269	-.251				21
22	-.163	-.119	-.173	-.192		-.230	-.221	-.235				22

Table 7

Pressure coefficients on swept wing

Configuration 1 M=1.61 R=1.7 x 10^6

Orif	Station 1	2	3	4	24	5	6	7	8	9	10	Orif
					α=-12		δ=-58.7					
1	.639	.615	.609	.595		-.295	-.010	-.458				1
2	.351	.401	.436	.690		.863	.853	.516				2
3	.268	.317	.361	.736		.853	.843	.460				3
4	.270	.264	.313	.775		.845	.817	.359				4
5	.248	.242	.426	.815		.843	.803	.286				5
6	.216	.226	.674	.855		.853	.785	.278				6
7	.212	.252	.771	.884		.855	.785	.266				7
8	.210	.593	.823	.912		.869	.785	.274				8
9	.228	.672	.855	.908		.861	.783	.248				9
10	.541	.700		.902		.849	.769	.258				10
11	.650	.732		.892		.833						11
12	.690	.763		.873		.815	.750	.198				12
13	.706	.742	.793	.829		.797	.740	.150				13
14	.714	.722	.754	.748		.767	.728	-.194				14
15	.704	.869	.873	.761		.722	.710	-.012				15
16	.696	1.055	.995	.837		.738	.688	.465				16
17		-.311	-.414	-.420		-.418	-.381	-.504				17
18		.926	.896	.827		.668	.690	-.156				18
19	.775	1.132	1.003	.805		.720	.726	.133				19
20			1.140	.880		.756	.734	.196				20
21	1.239	1.289	1.150	.942		.781	.702	.223				21
22	.950	.847	.819	.740		.587	.482	.129				22
					α=-12		δ=-49.1					
1	.637	.621	.621	.573		-.147	.178	-.393				1
2	.345	.403	.440	.446		.799	.825	.492				2
3	.272	.323	.365	.480		.787	.807	.446				3
4	.268	.266	.317	.629		.781	.779	.337				4
5	.244	.246	.272	.682		.791	.767	.266				5
6	.218	.230	.278	.765		.795	.752	.258				6
7	.210	.214	.591	.801		.807	.752	.246				7
8	.210	.192	.698	.833		.815	.748	.246				8
9	.208	.349	.763	.845		.825	.746	.220				9
10	.192	.593		.843		.817	.744	.232				10
11	.230	.674		.845		.809						11
12	.506	.706		.841		.797	.748	.184				12
13	.627	.734	.763	.821		.781	.744	.140				13
14	.680	.728	.736	.771		.761	.746	-.198				14
15	.708	.767	.787	.738		.740	.736	-.012				15
16	.714	.698	.771	.712		.718	.712	.498				16
17		-.268	-.343	-.373		-.359	-.252	-.539				17
18		.978	.900	.795		.696	.732	-.023				18
19	1.025	1.267	.962	.775		.746	.769	.185				19
20			1.120	.861		.756	.750	.229				20
21	1.017	1.156	1.091	.890		.742	.696	.212				21
22	.823	.756	.740	.662		.527	.456	.104				22
					α=-12		δ=-39.5					
1	.642	.623	.611	.569		-.010	.343	-.325				1
2	.351	.403	.434	.450		.644	.795	.460				2
3	.272	.325	.361	.381		.652	.771	.428				3
4	.272	.266	.311	.349		.664	.742	.321				4
5	.246	.246	.278	.329		.688	.730	.250				5
6	.220	.228	.258	.549		.720	.718	.236				6
7	.212	.214	.236	.652		.732	.722	.222				7
8	.214	.194	.256	.704		.750	.722	.224				8
9	.202	.180	.579	.761		.767	.722	.200				9
10	.186	.198		.781		.777	.718	.214				10
11	.188	.418		.797		.787						11
12	.196	.583		.803		.791	.730	.173				12
13	.321	.672	.756	.801		.787	.740	.146				13
14	.543	.714	.765	.789		.775	.750	-.181				14
15	.646	.730	.752	.765		.765	.750	-.010				15
16	.668	.581	.658	.724		.746	.724	.508				16
17		-.220	-.274	-.317		-.266	-.081	-.512				17
18		.805	.825	.773		.748	.771	.042				18
19	1.003	1.204	.954	.799		.787	.803	.217				19
20			1.110	.869		.779	.771	.240				20
21	.869	1.035	1.019	.861		.746	.690	.208				21
22	.732	.688	.680	.603		.510	.438	.087				22

Table 7 Continued

Pressure coefficients on swept wing

Configuration 1 M=1.61 R=1.7 x 10^6

Orif	Station 1	2	3	4	24	5	6	7	8	9	10	Orif
					α=-12		δ= -30.0					
1	.642	.621	.613	.567		-.002	.500	-.218				1
2	.351	.399	.440	.448		.496	.704	.422				2
3	.274	.323	.359	.375		.426	.690	.387				3
4	.270	.264	.313	.345		.389	.664	.284				4
5	.246	.246	.274	.315		.401	.670	.218				5
6	.218	.230	.254	.295		.399	.666	.206				6
7	.208	.212	.230	.258		.633	.676	.190				7
8	.210	.190	.204	.278		.660	.680	.194				8
9	.208	.173	.210	.547		.682	.680	.165				9
10	.188	.194		.646		.706	.680	.182				10
11	.194	.210		.698		.728						11
12	.196	.222		.728		.744	.690	.135				12
13	.210	.395	.682	.750		.756	.704	.123				13
14	.218	.601	.724	.771		.767	.714	-.179				14
15	.379	.670	.744	.781		.767	.718	-.040				15
16	.506	.662	.726	.771		.750	.698	.500				16
17		-.131	-.147	-.173		-.083	.127	-.517				17
18		.684	.740	.769		.787	.817	.110				18
19	.853	1.035	.898	.841		.851	.821	.208				19
20			.999	.884		.823	.738	.204				20
21	.726	.898	.902	.823		.759	.646	.160				21
22	.650	.601	.605	.575		.502	.403	.042				22
					α=-12		δ= -20.0					
1	.633	.617	.607	.571		-.004	.512	.024				1
2	.345	.401	.434	.452		.506	.516	.307				2
3	.266	.319	.361	.377		.434	.454	.236				3
4	.262	.262	.311	.333		.389	.401	.161				4
5	.238	.244	.274	.321		.357	.371	.099				5
6	.210	.224	.258	.299		.325	.347	.089				6
7	.208	.210	.236	.266		.301	.327	.067				7
8	.208	.190	.206	.246		.272	.436	.069				8
9	.202	.171	.214	.250		.280	.484	.046				9
10	.186	.190		.262		.284	.494	.046				10
11	.188	.214		.264		.363						11
12	.190	.222		.262		.460	.512	.006				12
13	.210	.234	.248	.325		.500	.520	.017				13
14	.210	.220	.234	.434		.537	.527	-.181				14
15	.214	.165	.345	.472		.506	.464	-.123				15
16	.327	.137	.347	.442		.405	.345	.421				16
17		.030	.157	.157		.178	.182	-.510				17
18		.480	.488	.547		.688	.761	.131				18
19	.345	.591	.706	.724		.807	.686	.142				19
20			.648	.696		.694	.591	.102				20
21	.367	.496	.601	.617		.629	.510	.083				21
22	.353	.389	.442	.472		.436	.321	-.008				22
					α=-12		δ= -10.0					
1	.637	.619	.615	.573		-.004	.514	.024				1
2	.351	.399	.444	.454		.508	.527	.305				2
3	.272	.323	.365	.381		.430	.464	.208				3
4	.272	.266	.317	.351		.393	.412	.125				4
5	.250	.242	.278	.319		.355	.383	.059				5
6	.218	.230	.264	.299		.321	.357	.034				6
7	.212	.218	.238	.270		.303	.323	.016				7
8	.216	.190	.208	.250		.280	.335	.006				8
9	.208	.182	.214	.254		.286	.331	-.018				9
10	.192	.198		.266		.290	.329	-.030				10
11	.194	.214		.262		.295						11
12	.200	.226		.262		.299	.319	-.081				12
13	.216	.240	.252	.264		.286	.303	-.142				13
14	.222	.226	.224	.238		.270	.266	-.206				14
15	.222	.163	.161	.180		.169	.161	-.204				15
16	.325	-.067	-.028	-.097		-.028	-.212	.308				16
17		-.091	-.105	-.165		-.206	-.171	-.496				17
18		.323	.238	.204		.169	.533	.081				18
19	.167	.238	.297	.303		.397	.405	.023				19
20			.256	.293		.349	.355	.021				20
21	.206	.208	.248	.272		.367	.311	-.025				21
22	.133	.182	.218	.256		.280	.196	-.075				22

Table 7 Continued

Pressure coefficients on swept wing

Configuration 1 M=1.61 R=1.7 x 10^6

Orif	Station 1	2	3	4	24	5	6	7	8	9	10	Orif
					α=-12		δ= 0.0					
1	.646	.619	.615	.569		-.008	.512	.022				1
2	.355	.401	.440	.452		.504	.524	.299				2
3	.270	.325	.361	.381		.436	.462	.206				3
4	.274	.264	.319	.351		.395	.412	.121				4
5	.248	.242	.272	.321		.357	.381	.052				5
6	.218	.228	.260	.301		.325	.357	.032				6
7	.214	.212	.240	.270		.301	.325	.010				7
8	.214	.192	.208	.254		.286	.331	.002				8
9	.206	.178	.216	.256		.286	.331	-.022				9
10	.190	.198		.266		.290	.327	-.034				10
11	.194	.214		.268		.293						11
12	.194	.228		.264		.299	.315	-.089				12
13	.214	.240	.250	.262		.290	.299	-.137				13
14	.220	.226	.226	.242		.272	.270	-.202				14
15	.216	.165	.161	.180		.165	.159	-.302				15
16	.317	-.103	-.044	-.153		-.040	-.284	.135				16
17		-.137	-.182	-.254		-.303	-.262	-.490				17
18		.139	.133	.147		.169	.143	-.100				18
19	.081	.065	.065	.063		.089	.081	-.162				19
20			.067	.073		.073	.089	-.160				20
21	.085	.073	.061	.073		.091	.097	-.150				21
22	.073	.077	.073	.087		.115	.067	-.152				22
					α= -12		δ= 0.0					
1	.622	.614	.642	.591		-.065	.491	-.069				1
2	.355	.438	.476	.489		.551	.575	.327				2
3	.307	.351	.402	.428		.468	.517	.246				3
4	.307	.303	.351	.392		.428	.456	.166				4
5	.287	.281	.315	.367		.392	.420	.099				5
6	.252	.258	.299	.339		.359	.398	.075				6
7	.242	.242	.285	.307		.355	.365	.055				7
8	.244	.226	.250	.295		.325	.382	.048				8
9	.246	.214	.260	.295		.325	.382	.036				9
10	.218	.246		.311		.329	.371	.014				10
11	.232	.260		.299		.331						11
12	.236	.264		.299		.335	.361	-.055				12
13	.248	.275	.283	.295		.325	.345	-.179				13
14	.254	.262	.262	.264		.301	.315	-.223				14
15	.258	.198	.190	.206		.204	.212	-.300				15
16	.386	-.085	-.016	-.129		-.018	-.305	.154				16
17		-.125	-.174	-.242		-.287	-.254	-.478				17
18		.141	.135	.153		.157	.164	-.138				18
19	.093	.067	.065	.055		.083	.075	-.194				19
20			.065	.067		.081	.077	-.190				20
21	.101	.087	.061	.073		.107	.087	-.181				21
22	.121	.093	.083	.109		.127	.057	-.163				22
					α=-12		δ= 10.0					
1	.634	.618	.636	.600		-.052	.480	-.063				1
2	.361	.438	.480	.497		.559	.569	.331				2
3	.305	.361	.410	.442		.489	.519	.246				3
4	.307	.301	.355	.398		.444	.458	.166				4
5	.285	.289	.323	.371		.406	.426	.097				5
6	.254	.268	.309	.345		.382	.396	.077				6
7	.252	.252	.289	.313		.355	.365	.050				7
8	.246	.230	.250	.299		.321	.379	.050				8
9	.246	.220	.264	.297		.321	.382	.028				9
10	.232	.246		.321		.325	.365	.022				10
11	.236	.264		.307		.331						11
12	.248	.270		.311		.329	.363	-.059				12
13	.262	.277	.293	.307		.329	.357	-.215				13
14	.264	.264	.268	.273		.301	.321	-.225				14
15	.262	.196	.200	.206		.194	.208	-.309				15
16	.392	-.077	-.008	-.131		-.022	-.319	.156				16
17		-.113	-.161	-.236		-.317	-.264	-.471				17
18		-.020	-.034	.002		-.012	.002	-.219				18
19	-.018	-.081	-.087	-.071		-.063	-.050	-.277				19
20			-.071	-.081		-.059	-.063	-.284				20
21	-.050	-.050	-.079	-.061		-.042	-.050	-.273				21
22	-.014	-.006	-.057	-.042		-.022	-.059	-.254				22

Table 7 Continued

Pressure coefficients on swept wing

Configuration 1 M=1.61 R=1.7 x 10^6

Orif	Station 1	2	3	4	24	5	6	7	8	9	10	Orif
					α=-12		δ= 20.0					
1	.628	.612	.628	.587		-.061	.486	-.063				1
2	.351	.436	.474	.489		.555	.577	.331				2
3	.299	.353	.396	.428		.476	.525	.258				3
4	.301	.295	.347	.396		.436	.460	.168				4
5	.277	.275	.315	.365		.400	.432	.105				5
6	.248	.258	.303	.345		.371	.408	.073				6
7	.246	.244	.283	.311		.355	.379	.057				7
8	.246	.230	.250	.303		.325	.388	.057				8
9	.244	.218	.256	.303		.325	.394	.032				9
10	.222	.238		.315		.331	.382	.024				10
11	.232	.258		.305		.339						11
12	.240	.262		.311		.337	.373	-.044				12
13	.254	.275	.287	.305		.327	.363	-.146				13
14	.256	.260	.258	.279		.303	.327	-.221				14
15	.262	.198	.196	.208		.200	.208	-.304				15
16	.379	-.069	-.016	-.131		-.016	-.303	.163				16
17		-.107	-.184	-.264		-.337	-.289	-.409				17
18		-.180	-.198	-.166		-.170	-.164	-.300				18
19	-.135	-.236	-.232	-.212		-.206	-.190	-.340				19
20			-.224	-.218		-.200	-.196	-.355				20
21	-.188	-.208	-.232	-.210		-.192	-.194	-.338				21
22	-.157	-.103	-.206	-.190		-.157	-.182	-.338				22
					α=-12		δ= 30.0					
1	.630	.616	.634	.591		-.059	.484	-.077				1
2	.349	.438	.478	.495		.553	.575	.333				2
3	.301	.359	.408	.432		.480	.523	.252				3
4	.307	.303	.355	.398		.434	.456	.168				4
5	.281	.281	.323	.363		.400	.426	.095				5
6	.248	.264	.307	.341		.369	.404	.073				6
7	.244	.252	.289	.317		.361	.375	.050				7
8	.248	.234	.250	.305		.329	.388	.048				8
9	.240	.224	.260	.305		.329	.390	.028				9
10	.226	.240		.317		.333	.375	.018				10
11	.232	.262		.303		.339						11
12	.240	.268		.309		.337	.371	-.050				12
13	.252	.279	.291	.303		.327	.361	-.190				13
14	.260	.266	.264	.273		.305	.325	-.219				14
15	.260	.200	.198	.208		.200	.204	-.294				15
16	.373	-.057	-.014	-.129		-.018	-.238	.184				16
17		-.095	-.240	-.270		-.311	-.297	-.342				17
18		-.289	-.305	-.275		-.289	-.279	-.352				18
19	-.222	-.331	-.333	-.313		-.313	-.301	-.377				19
20			-.329	-.321		-.309	-.303	-.390				20
21	-.268	-.311	-.325	-.311		-.297	-.293	-.371				21
22	-.258	-.186	-.281	-.275		-.244	-.268	-.348				22
					α=-12		δ= 39.3					
1	.628	.612	.624	.585		-.069	.478	-.079				1
2	.349	.434	.468	.486		.553	.573	.325				2
3	.297	.353	.394	.422		.476	.521	.252				3
4	.301	.297	.343	.394		.430	.456	.172				4
5	.277	.277	.315	.361		.398	.426	.107				5
6	.246	.260	.297	.337		.369	.402	.077				6
7	.246	.248	.281	.305		.359	.373	.067				7
8	.244	.230	.244	.297		.327	.384	.065				8
9	.242	.220	.252	.297		.325	.390	.044				9
10	.224	.234		.311		.333	.369	.034				10
11	.232	.256		.297		.337						11
12	.240	.266		.305		.337	.367	-.028				12
13	.256	.275	.279	.303		.325	.355	-.092				13
14	.258	.262	.254	.273		.303	.323	-.146				14
15	.258	.196	.186	.204		.196	.204	-.234				15
16	.373	-.048	-.018	-.133		-.016	-.170	.225				16
17		-.095	-.125	.137		.111	.036	-.229				17
18		-.369	-.388	-.349		-.353	-.335	-.363				18
19	-.301	-.402	-.400	-.371		-.369	-.347	-.373				19
20			-.390	-.375		-.361	-.349	-.375				20
21	-.325	-.377	-.384	-.367		-.351	-.337	-.375				21
22	-.341	-.279	-.333	-.329		-.295	-.309	-.350				22

Table 7 Continued

Pressure coefficients on swept wing

Configuration 1 M=1.61 R=1.7 x 10^6

Orif	Station 1	2	3	4	24	5	6	7	8	9	10	Orif
					α= -12		δ= 49.0					
1	.626	.608	.626	.591		-.067	.503	.006				1
2	.349	.438	.474	.489		.555	.573	.321				2
3	.297	.349	.398	.430		.480	.521	.260				3
4	.297	.297	.345	.398		.436	.458	.198				4
5	.273	.273	.313	.369		.402	.426	.149				5
6	.242	.258	.297	.337		.371	.400	.131				6
7	.244	.246	.277	.307		.357	.373	.125				7
8	.244	.228	.240	.293		.325	.386	.121				8
9	.236	.214	.252	.299		.325	.388	.109				9
10	.226	.240		.315		.333	.371	.095				10
11	.234	.258		.303		.337						11
12	.240	.264		.309		.337	.369	.038				12
13	.252	.273	.277	.307		.329	.357	.010				13
14	.260	.260	.256	.279		.305	.321	.002				14
15	.256	.206	.248	.212		.204	.198	-.050				15
16	.365	.240	.289	-.042		-.010	-.069	.315				16
17		.224	.390	.731		.696	.672	.083				17
18		-.452	-.428	-.394		-.392	-.351	-.332				18
19	-.355	-.462	-.424	-.406		-.392	-.357	-.319				19
20			-.422	-.406		-.386	-.353	-.332				20
21	-.424	-.444	-.420	-.404		-.388	-.351	-.329				21
22	-.438	-.394	-.398	-.392		-.359	-.341	-.329				22
					α= -12		δ= 58.7					
1	.620	.606	.624	.591		.103	.555	.050				1
2	.347	.434	.468	.491		.551	.571	.317				2
3	.295	.349	.398	.426		.474	.519	.254				3
4	.301	.295	.349	.392		.438	.458	.194				4
5	.277	.273	.315	.361		.400	.426	.147				5
6	.244	.260	.297	.333		.371	.406	.139				6
7	.244	.242	.277	.309		.357	.377	.143				7
8	.244	.228	.246	.297		.327	.390	.155				8
9	.236	.216	.254	.297		.327	.394	.147				9
10	.224	.234		.311		.333	.384	.137				10
11	.232	.256		.301		.343						11
12	.240	.262		.307		.349	.404	.099				12
13	.254	.273	.277	.313		.357	.388	.104				13
14	.256	.262	.297	.331		.347	.349	.088				14
15	.260	.270	.420	.287		.228	.224	-.050				15
16	.367	.386	.470	.079		.002	.083	.177				16
17		.361	.363	.670		.692	.704	-.340				17
18		-.497	-.458	-.428		-.418	-.369	-.344				18
19	-.436	-.495	-.456	-.430		-.412	-.373	-.365				19
20			-.458	-.430		-.410	-.373	-.363				20
21	-.503	-.484	-.456	-.430		-.410	-.373	-.357				21
22	-.478	-.456	-.448	-.428		-.394	-.363	.127				22
					α= - 6		δ= -59.0					
1	.732	.611	.635	.591		.361	.541	-.034				1
2	.157	.210	.248	.276		.591	.670	.333				2
3	.107	.115	.145	.248		.627	.662	.288				3
4	.095	.083	.113	.314		.678	.644	.202				4
5	.083	.071	.091	.601		.708	.642	.139				5
6	.063	.063	.192	.654		.708	.625	.125				6
7	.056	.052	.466	.654		.698	.623	.109				7
8	.048	.026	.533	.658		.680	.611	.113				8
9	.040	.024	.559	.635		.662	.597	.089				9
10	.032	.337		.603		.642	.565	.105				10
11	.030	.401		.514		.613						11
12	.097	.430		.432		.567	.535	.097				12
13	.323	.422	.377	.379		.474	.522	.067				13
14	.422	.407	.440	.410		.377	.500	-.225				14
15	.460	.569	.674	.527		.375	.482	-.040				15
16	.474	.974	.861	.627		.426	.462	.421				16
17		-.161	-.258	-.224		-.161	-.246	-.398				17
18		.986	.791	.674		.407	.466	-.154				18
19	1.055	1.200	.803	.555		.373	.484	.129				19
20			.978	.399		.365	.452	.221				20
21	1.047	1.174	1.049	.730		.416	.412	.221				21
22	.833	.769	.759	.672		.385	.252	.125				22

Table 7 Continued

Pressure coefficients on swept wing

Configuration 1 M=1.61 R=1.7 x 10^6

Orif	Station 1	2	3	4	24	5	6	7	8	9	10	Orif
					α=- 6		δ= -49.3					
1	.732	.611	.642	.589		.494	.631	.188				1
2	.157	.214	.252	.266		.351	.563	.299				2
3	.109	.121	.157	.155		.385	.569	.234				3
4	.101	.085	.123	.139		.506	.569	.159				4
5	.085	.073	.073	.272		.559	.583	.097				5
6	.069	.061	.071	.484		.603	.589	.085				6
7	.061	.059	.059	.518		.623	.595	.095				7
8	.052	.028	.262	.543		.625	.591	.095				8
9	.050	.016	.397	.575		.635	.585	.081				9
10	.038	.026		.555		.627	.565	.097				10
11	.036	.125		.510		.611						11
12	.036	.335		.430		.593	.533	.089				12
13	.046	.414	.385	.395		.537	.520	.054				13
14	.262	.442	.383	.399		.440	.508	-.229				14
15	.385	.432	.470	.446		.391	.494	-.031				15
16	.420	.147	.444	.401		.399	.484	.427				16
17		-.125	-.208	-.188		-.147	-.190	-.373				17
18		.952	.837	.668		.426	.488	-.056				18
19	1.035	1.251	.813	.531		.391	.496	.160				19
20			1.095	.662		.401	.472	.227				20
21	.865	1.079	1.045	.821		.452	.420	.225				21
22	.712	.702	.706	.692		.377	.262	.115				22
					α=- 6		δ= -39.6					
1	.734	.617	.635	.589		.486	.607	.547				1
2	.163	.214	.250	.266		.266	.297	.228				2
3	.111	.115	.155	.157		.204	.226	.119				3
4	.101	.087	.121	.137		.165	.333	.071				4
5	.087	.069	.085	.107		.133	.387	.038				5
6	.071	.061	.079	.087		.171	.432	.042				6
7	.061	.056	.061	.073		.405	.464	.056				7
8	.052	.032	.026	.095		.458	.482	.073				8
9	.046	.014	.018	.343		.486	.524	.069				9
10	.036	.020		.393		.522	.524	.089				10
11	.032	.032		.428		.541						11
12	.034	.036		.466		.535	.514	.085				12
13	.036	.121	.405	.480		.518	.520	.042				13
14	.044	.345	.468	.466		.500	.512	-.221				14
15	.109	.446	.442	.438		.476	.504	-.031				15
16	.238	.383	.311	.333		.450	.484	.435				16
17		-.075	-.095	-.119		-.107	-.081	-.348				17
18		.484	.563	.543		.460	.494	.021				18
19	.748	.904	.623	.510		.474	.514	.167				19
20			1.083	.718		.529	.506	.233				20
21	.631	.880	.952	.871		.577	.486	.215				21
22	.583	.581	.615	.633		.422	.290	.098				22
					α=- 6		δ= -30.0					
1	.738	.609	.639	.587		.494	.613	.635				1
2	.161	.210	.250	.278		.270	.297	.133				2
3	.111	.119	.151	.165		.206	.214	-.014				3
4	.101	.085	.117	.147		.161	.171	-.040				4
5	.085	.069	.093	.115		.137	.149	-.093				5
6	.065	.061	.085	.097		.109	.129	-.081				6
7	.063	.048	.069	.077		.093	.095	-.024				7
8	.052	.030	.038	.054		.061	.153	.006				8
9	.044	.010	.024	.032		.044	.313	.004				9
10	.038	.022		.036		.214	.377	.028				10
11	.036	.030		.050		.355						11
12	.032	.032		.299		.407	.416	.044				12
13	.044	.038	.089	.395		.428	.428	-.006				13
14	.040	.030	.365	.416		.444	.456	-.217				14
15	.038	.236	.407	.442		.456	.450	-.040				15
16	.105	.307	.403	.424		.432	.442	.425				16
17		-.040	-.004	-.030		.006	.071	-.337				17
18		.339	.414	.438		.446	.448	.040				18
19	.399	.718	.597	.518		.512	.514	.175				19
20			.813	.684		.599	.559	.198				20
21	.412	.646	.756	.746		.650	.537	.165				21
22	.424	.456	.510	.524		.462	.333	.042				22

Table 7 Continued

Pressure coefficients on swept wing

Configuration 1 M=1.61 R=1.7 x 10^6

Orif	Station 1	2	3	4	24	5	6	7	8	9	10	Orif
					α=- 6		δ= -20.0					
1	.736	.617	.646	.587		.480	.617	.637				1
2	.163	.214	.252	.278		.264	.303	.143				2
3	.107	.121	.153	.161		.194	.218	-.006				3
4	.099	.087	.121	.145		.169	.178	-.044				4
5	.093	.071	.091	.109		.133	.151	-.085				5
6	.069	.061	.079	.099		.115	.131	-.101				6
7	.067	.054	.067	.077		.097	.101	-.117				7
8	.059	.032	.032	.052		.063	.077	-.131				8
9	.050	.014	.016	.030		.044	.067	-.145				9
10	.044	.024		.042		.048	.063	-.165				10
11	.036	.036		.044		.050						11
12	.036	.034		.050		.061	.067	-.139				12
13	.042	.046	.048	.048		.056	.077	-.108				13
14	.040	.040	.044	.036		.089	.202	-.190				14
15	.032	.004	.038	.133		.206	.238	-.125				15
16	.091	.014	.105	.186		.190	.202	.390				16
17		-.032	.046	.059		.044	.073	-.337				17
18		.192	.178	.214		.254	.363	.081				18
19	.137	.393	.454	.438		.488	.500	.162				19
20			.436	.486		.520	.488	.187				20
21	.180	.290	.401	.438		.480	.414	.098				21
22	.178	.238	.303	.331		.313	.236	-.019				22
					α=- 6		δ= -10.0					
1	.736	.619	.648	.595		.486	.623	.627				1
2	.167	.218	.258	.288		.282	.315	.153				2
3	.117	.127	.159	.171		.220	.226	.006				3
4	.101	.093	.127	.151		.178	.188	-.036				4
5	.085	.075	.093	.123		.147	.161	-.073				5
6	.069	.063	.085	.107		.123	.143	-.093				6
7	.065	.061	.073	.083		.109	.111	-.111				7
8	.059	.034	.040	.065		.073	.089	-.121				8
9	.046	.020	.026	.040		.059	.083	-.135				9
10	.046	.032		.046		.059	.071	-.149				10
11	.040	.042		.048		.054						11
12	.036	.042		.054		.063	.083	-.153				12
13	.046	.046	.052	.059		.065	.071	-.225				13
14	.044	.046	.048	.048		.067	.071	-.171				14
15	.030	.006	.012	.020		.010	.020	-.296				15
16	.075	-.101	-.095	-.111		-.107	-.117	.152				16
17		-.111	-.101	-.115		-.135	-.127	-.337				17
18		.059	.012	-.004		-.034	.040	-.042				18
19	-.014	.059	.077	.061		.079	.048	-.160				19
20			.052	.063		.059	.034	-.160				20
21	.012	.008	.044	.050		.067	.024	-.165				21
22	-.020	.014	.030	.042		.042	-.022	-.160				22
					α=- 6		δ= 0.0					
1	.748	.621	.635	.593		.480	.617	.617				1
2	.167	.222	.262	.288		.284	.315	.157				2
3	.119	.135	.165	.176		.218	.228	.018				3
4	.107	.097	.127	.153		.186	.194	-.022				4
5	.091	.079	.101	.121		.153	.169	-.065				5
6	.077	.069	.087	.109		.129	.145	-.083				6
7	.069	.059	.075	.085		.113	.113	-.099				7
8	.059	.036	.046	.063		.073	.103	-.105				8
9	.052	.024	.030	.044		.056	.089	-.121				9
10	.046	.034		.050		.061	.083	-.137				10
11	.042	.042		.052		.063						11
12	.038	.042		.063		.069	.091	-.141				12
13	.050	.052	.061	.061		.071	.081	-.206				13
14	.046	.046	.052	.054		.071	.075	-.175				14
15	.038	.010	.016	.022		.012	.036	-.271				15
16	.075	-.135	-.115	-.149		-.109	-.137	.142				16
17		-.137	-.145	-.163		-.171	-.153	-.375				17
18		-.034	-.034	-.030		-.044	-.034	-.142				18
19	-.056	-.087	-.091	-.083		-.073	-.081	-.212				19
20			-.103	-.091		-.081	-.089	-.217				20
21	-.093	-.089	-.107	-.097		-.083	-.095	-.212				21
22	-.061	-.067	-.091	-.087		-.075	-.109	-.192				22

Table 7 Continued

Pressure coefficients on swept wing

Configuration 1 M= 1.61 R=1.7 x 10^6

Orif	Station 1	2	3	4	24	5	6	7	8	9	10	Orif
					α= - 6		δ= 0.0					
1	.745	.604	.660	.602		.428	.630	.579				1
2	.190	.248	.287	.311		.315	.339	.178				2
3	.139	.157	.194	.202		.246	.256	.040				3
4	.129	.121	.157	.176		.208	.220	-.008				4
5	.115	.103	.125	.149		.178	.192	-.061				5
6	.099	.089	.111	.129		.151	.166	-.077				6
7	.089	.083	.099	.111		.137	.137	-.097				7
8	.083	.052	.063	.089		.097	.125	-.105				8
9	.079	.040	.046	.067		.085	.109	-.111				9
10	.067	.050		.075		.087	.103	-.133				10
11	.063	.065		.081		.089						11
12	.063	.069		.087		.093	.111	-.145				12
13	.069	.077	.081	.083		.097	.103	-.204				13
14	.069	.071	.077	.077		.097	.095	-.307				14
15	.065	.030	.038	.046		.036	.038	-.300				15
16	.159	-.133	-.115	-.159		-.117	-.178	-.311				16
17		-.115	-.147	-.157		-.170	-.159	-.186				17
18		-.061	-.042	-.036		-.026	-.046	-.271				18
19	-.079	-.103	-.113	-.119		-.101	-.131	-.282				19
20			-.119	-.121		-.115	-.141	-.279				20
21	-.095	-.123	-.127	-.127		-.119	-.147	-.256				21
22	-.071	-.091	-.107	-.103		-.105	-.157	-.142				22
					α= - 6		δ= 10.0					
1	.743	.616	.662	.595		.438	.624	.587				1
2	.188	.248	.287	.313		.321	.343	.180				2
3	.137	.153	.192	.196		.248	.256	.034				3
4	.129	.121	.153	.180		.206	.214	-.014				4
5	.115	.103	.119	.147		.176	.190	-.063				5
6	.099	.091	.105	.131		.151	.168	-.085				6
7	.091	.085	.095	.113		.133	.133	-.105				7
8	.087	.061	.063	.083		.091	.113	-.115				8
9	.085	.048	.050	.057		.075	.107	-.125				9
10	.069	.055		.071		.073	.097	-.141				10
11	.067	.065		.075		.077						11
12	.065	.067		.085		.081	.103	-.147				12
13	.071	.071	.075	.081		.085	.099	-.200				13
14	.071	.067	.075	.069		.089	.095	-.317				14
15	.063	.030	.032	.038		.026	.038	-.310				15
16	.159	-.109	-.115	-.188		-.135	-.170	-.319				16
17		-.099	-.113	-.139		-.174	-.139	-.254				17
18		-.168	-.176	-.153		-.159	-.161	-.311				18
19	-.139	-.216	-.220	-.210		-.208	-.212	-.313				19
20			-.226	-.220		-.214	-.224	-.275				20
21	-.182	-.220	-.234	-.220		-.216	-.230	-.259				21
22	-.164	-.129	-.208	-.208		-.196	-.218	-.117				22
					α= - 6		δ= 20.0					
1	.741	.608	.660	.600		.436	.634	.585				1
2	.186	.246	.289	.307		.321	.349	.186				2
3	.137	.155	.188	.194		.244	.264	.038				3
4	.125	.115	.149	.176		.208	.220	-.010				4
5	.111	.097	.119	.141		.178	.194	-.067				5
6	.095	.087	.107	.127		.155	.170	-.093				6
7	.087	.081	.093	.103		.135	.131	-.107				7
8	.079	.055	.061	.079		.097	.115	-.117				8
9	.075	.040	.044	.055		.079	.109	-.131				9
10	.063	.046		.073		.083	.095	-.143				10
11	.059	.059		.075		.083						11
12	.059	.061		.083		.093	.109	-.151				12
13	.061	.067	.077	.083		.091	.105	-.204				13
14	.065	.061	.069	.075		.097	.103	-.313				14
15	.059	.022	.030	.042		.034	.044	-.330				15
16	.151	-.059	-.113	-.188		-.123	-.105	-.323				16
17		-.050	-.097	-.157		-.170	-.095	-.334				17
18		-.270	-.285	-.252		-.260	-.260	-.350				18
19	-.218	-.313	-.321	-.297		-.293	-.295	-.340				19
20			-.317	-.309		-.295	-.305	-.313				20
21	-.268	-.309	-.323	-.309		-.299	-.305	-.290				21
22	-.258	-.186	-.281	-.283		-.264	-.279	-.094				22

Table 7 Continued

Pressure coefficients on swept wing

Configuration 1 M= 1.61 R= 1.7 x 10^6

Orif	Station 1	2	3	4	24	5	6	7	8	9	10	Orif
					α= - 6		δ= 30.0					
1	.741	.612	.660	.591		.426	.630	.579				1
2	.188	.248	.285	.311		.315	.349	.186				2
3	.137	.155	.188	.196		.246	.260	.038				3
4	.127	.117	.151	.172		.204	.214	-.014				4
5	.107	.097	.117	.139		.176	.190	-.067				5
6	.093	.091	.103	.127		.151	.164	-.085				6
7	.091	.081	.091	.109		.133	.131	-.107				7
8	.083	.057	.057	.079		.097	.113	-.123				8
9	.073	.042	.042	.055		.079	.103	-.123				9
10	.063	.050		.067		.079	.095	-.135				10
11	.061	.063		.069		.083						11
12	.065	.065		.081		.091	.107	-.133				12
13	.065	.069	.073	.077		.089	.103	-.119				13
14	.065	.063	.069	.071		.095	.097	-.179				14
15	.059	.032	.036	.038		.032	.044	-.300				15
16	.151	.038	-.022	-.127		-.105	-.018	-.171				16
17		.034	-.018	-.151		-.153	-.046	-.355				17
18		-.357	-.369	-.345		-.353	-.345	-.369				18
19	-.303	-.396	-.394	-.375		-.375	-.363	-.355				19
20			-.388	-.382		-.367	-.357	-.352				20
21	-.347	-.377	-.382	-.369		-.361	-.349	-.327				21
22	-.343	-.268	-.333	-.339		-.319	-.323	-.038				22
					α= - 6		δ= 39.2					
1	.741	.608	.664	.589		.424	.630	.579				1
2	.184	.244	.287	.313		.321	.351	.178				2
3	.135	.155	.192	.200		.244	.264	.042				3
4	.127	.119	.155	.176		.204	.220	.012				4
5	.113	.103	.123	.149		.176	.194	-.010				5
6	.091	.091	.111	.131		.151	.172	-.020				6
7	.089	.083	.099	.111		.135	.135	-.038				7
8	.079	.059	.065	.083		.099	.113	-.048				8
9	.073	.042	.050	.059		.081	.107	-.048				9
10	.061	.048		.071		.079	.097	-.061				10
11	.059	.063		.071		.083						11
12	.061	.063		.079		.091	.105	-.052				12
13	.065	.069	.081	.079		.095	.105	.025				13
14	.067	.067	.077	.073		.099	.095	-.027				14
15	.063	.048	.137	.123		.038	.061	-.250				15
16	.151	.145	.216	.135		-.075	.040	.015				16
17		.131	.204	.159		.198	.069	-.342				17
18		-.414	-.412	-.392		-.398	-.375	-.359				18
19	-.367	-.444	-.426	-.408		-.406	-.377	-.346				19
20			-.414	-.410		-.388	-.369	-.359				20
21	-.394	-.418	-.404	-.394		-.384	-.363	-.336				21
22	-.400	-.333	-.373	-.377		-.349	-.339	.046				22
					α= - 6		δ= 48.9					
1	.741	.608	.662	.591		.426	.630	.577				1
2	.186	.242	.285	.313		.319	.345	.184				2
3	.137	.153	.192	.200		.248	.262	.040				3
4	.125	.115	.155	.172		.206	.216	.016				4
5	.111	.095	.119	.143		.174	.194	.020				5
6	.095	.091	.107	.131		.155	.174	.026				6
7	.085	.083	.091	.107		.137	.135	.020				7
8	.081	.059	.059	.085		.093	.109	.010				8
9	.071	.042	.046	.059		.077	.107	.022				9
10	.065	.050		.069		.077	.095	.012				10
11	.059	.061		.073		.081						11
12	.061	.067		.081		.089	.107	.044				12
13	.065	.069	.075	.081		.093	.103	.184				13
14	.067	.065	.101	.170		.157	.105	.171				14
15	.069	.115	.297	.317		.137	.164	-.100				15
16	.151	.256	.351	.355		.052	.206	.217				16
17		.226	.254	.311		.497	.315	-.361				17
18		-.458	-.442	-.416		-.420	-.392	-.363				18
19	-.398	-.478	-.444	-.428		-.424	-.388	-.363				19
20			-.438	-.424		-.414	-.388	-.367				20
21	-.446	-.456	-.434	-.418		-.412	-.388	-.355				21
22	-.444	-.400	-.414	-.410		-.388	-.367	.102				22

Table 7 Continued

Pressure coefficients on swept wing

Configuration I M=1.61 R=1.7 x 10^6

Orif	Station 1	2	3	4	24	5	6	7	8	9	10	Orif
					α= -6		δ= 58.4					
1	.737	.606	.660	.589		.513	.656	.686				1
2	.186	.238	.283	.309		.317	.343	.164				2
3	.133	.149	.190	.198		.244	.262	.046				3
4	.123	.117	.147	.178		.204	.220	.073				4
5	.111	.101	.115	.141		.182	.196	.083				5
6	.095	.091	.107	.125		.151	.176	.093				6
7	.087	.081	.095	.105		.135	.137	.107				7
8	.085	.059	.057	.077		.101	.123	.103				8
9	.075	.040	.046	.059		.083	.113	.121				9
10	.063	.048		.073		.087	.101	.095				10
11	.063	.059		.075		.091						11
12	.063	.061		.081		.099	.115	.139				12
13	.067	.065	.075	.083		.107	.109	.296				13
14	.067	.063	.133	.216		.182	.115	.215				14
15	.071	.159	.327	.359		.149	.188	-.100				15
16	.147	.285	.367	.382		.024	.234	.269				16
17		.218	.174	.246		.353	.353	-.388				17
18		-.503	-.458	-.442		-.434	-.410	-.384				18
19	-.442	-.507	-.458	-.448		-.434	-.410	-.386				19
20			-.464	-.442		-.432	-.414	-.384				20
21	-.499	-.495	-.464	-.442		-.432	-.408	-.375				21
22	-.486	-.442	-.450	-.438		-.416	-.396	.133				22
					α= 0		δ= -58.6					
1	.759	.597	.642	.458		.668	.674	.660				1
2	.022	-.010	.020	.040		.341	.472	.216				2
3	-.032	-.050	-.038	.040		.432	.486	.135				3
4	-.034	-.065	-.063	.307		.484	.494	.097				4
5	-.040	-.071	-.077	.420		.516	.494	.065				5
6	-.063	-.083	-.081	.464		.531	.472	.059				6
7	-.061	-.087	.173	.460		.545	.454	.048				7
8	-.071	-.097	.307	.424		.522	.434	.050				8
9	-.079	-.107	.325	.367		.498	.422	.042				9
10	-.083	-.105		.268		.466	.393	.040				10
11	-.085	.149		.194		.424						11
12	-.083	.242		.153		.333	.357	.093				12
13	-.073	.258	.159	.133		.202	.347	.044				13
14	.157	.224	.178	.157		.111	.327	-.094				14
15	.274	.266	.446	.339		.133	.299	.033				15
16	.290	.730	.742	.496		.188	.290	.458				16
17		.040	-.004	.036		.089	.030	-.004				17
18		.942	.696	.539		.224	.309	.181				18
19	1.081	1.095	.607	.359		.159	.313	.273				19
20			.878	.339		.105	.272	.306				20
21	.912	1.132	1.007	.494		.127	.224	.262				21
22	.742	.742	.730	.545		.119	.079	.142				22
					α= 0		δ= -53.8					
1	.759	.597	.639	.460		.666	.631	.710				1
2	.028	-.008	.026	.036		.192	.414	.186				2
3	-.032	-.061	-.042	-.026		.280	.452	.131				3
4	-.036	-.065	-.061	-.024		.355	.464	.113				4
5	-.036	-.081	-.087	.131		.486	.466	.083				5
6	-.061	-.085	-.087	.278		.508	.450	.073				6
7	-.065	-.087	-.091	.367		.500	.432	.075				7
8	-.069	-.103	.048	.375		.466	.418	.071				8
9	-.081	-.109	.161	.347		.430	.407	.050				9
10	-.085	-.107		.293		.387	.385	.044				10
11	-.087	-.097		.230		.313						11
12	-.087	.093		.178		.210	.353	.048				12
13	-.091	.256	.198	.143		.129	.333	-.002				13
14	-.016	.270	.157	.143		.089	.297	-.083				14
15	.200	.238	.238	.246		.127	.232	.023				15
16	.252	-.012	.399	.341		.163	.216	.429				16
17		.048	.006	.054		.115	.073	-.008				17
18		.890	.730	.533		.230	.234	.158				18
19	1.007	1.099	.585	.323		.163	.222	.260				19
20			1.007	.410		.155	.188	.267				20
21	.791	1.073	1.029	.646		.208	.147	.221				21
22	.666	.698	.704	.660		.208	.020	.121				22

Table 7 Continued

Pressure coefficients on swept wing

Configuration 1 M= 1.61 R= 1.7 x 10^6

Orif	Station 1	2	3	4	24	5	6	7	8	9	10	Orif
					α= 0		δ= -49.0					
1	.769	.599	.637	.460		.648	.541	.775				1
2	.030	-.002	.022	.030		.038	.198	.125				2
3	-.022	-.059	-.050	-.034		.026	.266	.107				3
4	-.030	-.063	-.063	-.061		.059	.333	.123				4
5	-.042	-.075	-.083	-.075		.286	.393	.105				5
6	-.059	-.083	-.087	-.012		.422	.399	.107				6
7	-.065	-.087	-.093	.145		.464	.401	.105				7
8	-.063	-.103	-.111	.266		.466	.389	.103				8
9	-.075	-.115	-.111	.329		.434	.387	.085				9
10	-.085	-.111		.319		.399	.375	.085				10
11	-.085	-.099		.276		.353						11
12	-.085	-.087		.230		.268	.361	.073				12
13	-.087	.147	.270	.184		.198	.339	.008				13
14	-.081	.270	.218	.161		.145	.315	-.079				14
15	.075	.278	.176	.180		.149	.270	.012				15
16	.182	.030	-.006	.111		.145	.256	.456				16
17		.056	.038	.075		.139	.087	-.004				17
18		.621	.652	.500		.254	.260	.158				18
19	.849	.950	.480	.268		.188	.254	.267				19
20			1.089	.482		.206	.230	.269				20
21	.680	.978	1.029	.799		.276	.204	.219				21
22	.609	.639	.678	.688		.248	.073	.108				22
					α= 0		δ= -44.3					
1	.767	.597	.642	.464		.660	.510	.769				1
2	.032	.002	.028	.042		.044	.054	.044				2
3	-.020	-.052	-.038	-.020		-.004	.052	.020				3
4	-.034	-.056	-.061	-.052		-.044	.125	.087				4
5	-.032	-.069	-.075	-.073		-.024	.276	.099				5
6	-.054	-.077	-.075	-.085		.137	.335	.113				6
7	-.056	-.081	-.087	-.085		.299	.351	.113				7
8	-.065	-.093	-.109	.048		.385	.333	.119				8
9	-.077	-.107	-.119	.218		.395	.333	.103				9
10	-.081	-.103		.266		.375	.327	.103				10
11	-.087	-.095		.293		.351						11
12	-.085	-.089		.290		.315	.321	.067				12
13	-.085	-.030	.272	.262		.260	.315	-.017				13
14	-.079	.226	.282	.224		.208	.295	-.062				14
15	-.026	.299	.224	.198		.176	.264	.012				15
16	.097	.178	.016	.034		.137	.250	.387				16
17		.065	.079	.109		.147	.097	-.042				17
18		.405	.524	.452		.254	.250	.042				18
19	.682	.730	.379	.258		.202	.258	.094				19
20			1.083	.484		.238	.254	.112				20
21	.577	.898	.999	.833		.315	.242	.100				21
22	.555	.599	.652	.684		.280	.121	.031				22
					α= 0		δ= -39.5					
1	.767	.599	.639	.466		.652	.514	.759				1
2	.032	.000	.032	.038		.040	.056	.014				2
3	-.028	-.050	-.032	-.028		-.010	-.012	-.089				3
4	-.032	-.063	-.061	-.063		-.046	-.044	-.008				4
5	-.036	-.075	-.079	-.079		-.077	.069	.061				5
6	-.056	-.081	-.083	-.093		-.065	.182	.113				6
7	-.063	-.077	-.093	-.099		.020	.282	.115				7
8	-.067	-.097	-.111	-.111		.194	.284	.121				8
9	-.077	-.107	-.119	.000		.290	.288	.117				9
10	-.077	-.101		.103		.323	.293	.105				10
11	-.083	-.091		.246		.321						11
12	-.085	-.089		.268		.307	.286	.067				12
13	-.083	-.077	.246	.270		.280	.284	-.025				13
14	-.073	.079	.272	.254		.248	.274	-.065				14
15	-.069	.268	.262	.220		.210	.258	.008				15
16	.026	.236	.133	.105		.178	.250	.381				16
17		.061	.105	.127		.155	.123	-.048				17
18		.295	.373	.359		.248	.254	.035				18
19	.522	.648	.353	.244		.220	.258	.067				19
20			.956	.452		.270	.268	.094				20
21	.486	.803	.946	.754		.347	.282	.087				21
22	.484	.547	.601	.650		.315	.173	.023				22

Table 7 Continued

Pressure coefficients on swept wing

Configuration 1 M= 1.61 R= 1.7 x 10^6

Orif	Station 1	2	3	4	24	5	6	7	8	9	10	Orif
					α= 0		δ= -35.0					
1	.761	.593	.639	.470		.664	.516	.750				1
2	.036	-.002	.022	.040		.050	.065	.008				2
3	-.026	-.054	-.042	-.024		-.002	-.014	-.119				3
4	-.036	-.065	-.063	-.050		-.034	-.048	-.095				4
5	-.046	-.077	-.081	-.071		-.069	-.056	-.052				5
6	-.065	-.081	-.079	-.085		-.081	-.048	-.008				6
7	-.067	-.081	-.087	-.091		-.085	.065	.010				7
8	-.071	-.097	-.103	-.105		-.073	.085	.075				8
9	-.081	-.109	-.111	-.119		.028	.131	.085				9
10	-.081	-.107		-.107		.111	.214	.085				10
11	-.089	-.099		.059		.222						11
12	-.087	-.089		.155		.254	.238	.065				12
13	-.085	-.083	.079	.234		.264	.242	-.019				13
14	-.079	-.073	.230	.262		.260	.242	-.044				14
15	-.079	.178	.264	.258		.240	.232	.017				15
16	-.018	.220	.220	.198		.208	.226	.385				16
17		.050	.125	.155		.161	.141	-.048				17
18		.222	.282	.290		.254	.232	.029				18
19	.341	.577	.361	.272		.248	.240	.046				19
20			.742	.432		.307	.266	.077				20
21	.361	.648	.825	.656		.387	.293	.075				21
22	.385	.462	.537	.579		.341	.210	.019				22
					α= 0		δ= -30.0					
1	.767	.599	.642	.462		.656	.514	.759				1
2	.028	-.002	.032	.046		.050	.061	.004				2
3	-.020	-.052	-.040	-.032		-.002	-.014	-.117				3
4	-.032	-.061	-.054	-.054		-.046	-.052	-.091				4
5	-.038	-.075	-.077	-.075		-.073	-.056	-.087				5
6	-.054	-.081	-.085	-.087		-.081	-.077	-.091				6
7	-.061	-.081	-.091	-.095		-.089	-.097	-.083				7
8	-.069	-.097	-.109	-.113		-.113	-.109	-.030				8
9	-.075	-.107	-.115	-.129		-.127	-.071	-.002				9
10	-.081	-.105		-.121		-.113	.038	.020				10
11	-.087	-.093		-.121		.012						11
12	-.085	-.085		-.067		.093	.147	.052				12
13	-.083	-.079	-.095	.111		.171	.186	-.015				13
14	-.077	-.091	.101	.196		.226	.198	-.012				14
15	-.083	.036	.202	.234		.238	.206	.025				15
16	-.026	.143	.214	.226		.220	.214	.383				16
17		.048	.127	.149		.159	.143	-.048				17
18		.163	.220	.240		.232	.204	.025				18
19	.202	.488	.357	.278		.262	.228	.044				19
20			.575	.414		.321	.272	.056				20
21	.240	.468	.629	.541		.391	.315	.058				21
22	.272	.359	.436	.456		.315	.228	.004				22
					α= 0		δ= -25.0					
1	.761	.599	.697	.468		.652	.518	.763				1
2	.022	-.008	.028	.040		.048	.065	.020				2
3	-.028	-.061	-.042	-.020		.000	-.016	-.113				3
4	-.038	-.063	-.061	-.050		-.048	-.044	-.087				4
5	-.040	-.081	-.083	-.077		-.065	-.059	-.079				5
6	-.065	-.083	-.083	-.081		-.073	-.077	-.087				6
7	-.067	-.085	-.093	-.095		-.087	-.093	-.081				7
8	-.073	-.101	-.109	-.105		-.115	-.105	-.099				8
9	-.081	-.111	-.117	-.117		-.125	-.111	-.091				9
10	-.085	-.107		-.111		-.119	-.123	-.099				10
11	-.091	-.099		-.111		-.121						11
12	-.087	-.097		-.101		-.109	-.048	-.056				12
13	-.087	-.085	-.097	-.093		-.046	.008	-.079				13
14	-.085	-.097	-.081	.000		.040	.052	.012				14
15	-.091	-.087	.044	.111		.143	.141	.042				15
16	-.048	.042	.129	.169		.159	.159	.383				16
17		.012	.105	.125		.131	.129	-.054				17
18		.099	.143	.159		.169	.161	.077				18
19	.079	.335	.303	.274		.246	.222	.052				19
20			.399	.357		.311	.264	.058				20
21	.125	.282	.405	.395		.353	.299	.048				21
22	.145	.220	.293	.311		.240	.196	-.017				22

Table 7 Continued

Pressure coefficients on swept wing

Configuration 1 M= 1.61 R= 1.7 x 10^6

Orif	Station 1	2	3	4	24	5	6	7	8	9	10	Orif
					α= 0		δ= -20.0					
1	.759	.597	.644	.466		.658	.516	.761				1
2	.026	-.004	.032	.046		.050	.065	.004				2
3	-.024	-.054	-.042	-.020		-.002	-.016	-.125				3
4	-.032	-.063	-.048	-.056		-.048	-.052	-.089				4
5	-.038	-.071	-.085	-.077		-.065	-.061	-.081				5
6	-.059	-.079	-.087	-.089		-.077	-.075	-.089				6
7	-.063	-.075	-.093	-.097		-.091	-.101	-.081				7
8	-.071	-.097	-.103	-.111		-.113	-.113	-.099				8
9	-.079	-.109	-.127	-.125		-.129	-.117	-.095				9
10	-.087	-.097		-.117		-.121	-.121	-.111				10
11	-.085	-.095		-.113		-.121						11
12	-.087	-.091		-.103		-.117	-.119	-.149				12
13	-.081	-.079	-.103	-.107		-.115	-.117	-.162				13
14	-.083	-.085	-.097	-.103		-.111	-.107	.004				14
15	-.089	-.097	-.087	-.052		-.028	.014	.027				15
16	-.061	-.002	.020	.061		.052	.061	.392				16
17		-.014	.028	.052		.054	.067	-.085				17
18		.046	.042	.059		.071	.077	.102				18
19	.004	.196	.198	.173		.165	.145	.027				19
20			.226	.226		.198	.180	.029				20
21	.048	.141	.224	.234		.214	.186	.002				21
22	.044	.107	.155	.167		.129	.089	-.044				22
					α= 0		δ= -15.0					
1	.767	.599	.646	.468		.666	.524	.773				1
2	.028	.000	.032	.046		.048	.071	.020				2
3	-.020	-.052	-.040	-.024		-.004	-.004	-.109				3
4	-.024	-.052	-.056	-.052		-.046	-.042	-.079				4
5	-.034	-.069	-.073	-.075		-.059	-.061	-.069				5
6	-.056	-.077	-.081	-.087		-.077	-.077	-.069				6
7	-.061	-.077	-.083	-.093		-.091	-.091	-.067				7
8	-.067	-.097	-.101	-.107		-.107	-.101	-.089				8
9	-.077	-.105	-.113	-.125		-.121	-.107	-.085				9
10	-.079	-.103		-.113		-.121	-.117	-.105				10
11	-.085	-.089		-.111		-.119						11
12	-.079	-.085		-.105		-.113	-.113	-.131				12
13	-.081	-.083	-.093	-.105		-.113	-.109	-.175				13
14	-.075	-.085	-.095	-.101		-.107	-.109	-.033				14
15	-.089	-.107	-.107	-.099		-.115	-.069	-.077				15
16	-.067	-.020	-.032	-.002		-.024	-.006	.308				16
17		-.022	-.022	-.002		-.008	.002	-.133				17
18		.020	.000	.000		.004	.008	.050				18
19	-.038	.105	.121	.097		.081	.063	-.046				19
20			.129	.121		.095	.083	-.048				20
21	.006	.065	.123	.125		.111	.087	-.065				21
22	-.022	.036	.077	.083		.065	.028	-.092				22
					α= 0		δ= -10.0					
1	.767	.597	.631	.470		.658	.529	.765				1
2	.032	.006	.026	.048		.050	.069	.016				2
3	-.016	-.054	-.038	-.024		.000	-.012	-.117				3
4	-.030	-.059	-.061	-.059		-.046	-.038	-.081				4
5	-.032	-.075	-.077	-.077		-.075	-.054	-.081				5
6	-.054	-.081	-.085	-.087		-.081	-.073	-.081				6
7	-.061	-.079	-.093	-.091		-.077	-.087	-.081				7
8	-.069	-.095	-.107	-.107		-.105	-.101	-.093				8
9	-.077	-.111	-.113	-.121		-.119	-.111	-.093				9
10	-.077	-.099		-.111		-.119	-.119	-.121				10
11	-.083	-.089		-.109		-.115						11
12	-.085	-.083		-.111		-.109	-.109	-.129				12
13	-.081	-.079	-.095	-.101		-.105	-.113	-.169				13
14	-.077	-.085	-.095	-.103		-.101	-.115	-.019				14
15	-.087	-.109	-.117	-.115		-.129	-.117	-.123				15
16	-.073	-.087	-.103	-.095		-.111	-.097	.269				16
17		-.079	-.085	-.093		-.097	-.093	-.135				17
18		-.044	-.069	-.085		-.097	-.095	-.023				18
19	-.093	-.036	-.028	-.061		-.065	-.089	-.110				19
20			-.032	-.048		-.067	-.083	-.112				20
21	-.083	-.061	-.036	-.040		-.052	-.085	-.123				21
22	-.101	-.056	-.046	-.042		-.073	-.103	-.150				22

Table 7 Continued

Pressure coefficients on swept wing

Configuration 1 M=1.61 R=1.7 x 10^6

Orif	Station 1	2	3	4	24	5	6	7	8	9	10	Orif
					α= 0	δ= - 5.0						
1	.765	.605	.644	.476		.656	.533	.767				1
2	.028	.002	.044	.038		.056	.073	.022				2
3	-.016	-.052	-.032	-.024		-.004	-.006	-.109				3
4	-.026	-.056	-.056	-.054		-.044	-.036	-.083				4
5	-.032	-.077	-.073	-.061		-.063	-.054	-.071				5
6	-.052	-.073	-.081	-.079		-.079	-.065	-.079				6
7	-.059	-.073	-.083	-.089		-.081	-.083	-.075				7
8	-.065	-.089	-.101	-.107		-.103	-.083	-.085				8
9	-.075	-.097	-.111	-.117		-.113	-.087	-.087				9
10	-.081	-.093		-.109		-.107	-.095	-.105				10
11	-.081	-.083		-.109		-.107						11
12	-.089	-.081		-.103		-.103	-.091	-.119				12
13	-.081	-.077	-.091	-.103		-.101	-.095	-.167				13
14	-.077	-.081	-.089	-.103		-.099	-.103	-.019				14
15	-.089	-.111	-.111	-.117		-.125	-.109	-.133				15
16	-.077	-.109	-.125	-.129		-.131	-.109	.227				16
17		-.101	-.111	-.121		-.123	-.119	-.152				17
18		-.089	-.107	-.117		-.135	-.131	-.092				18
19	-.117	-.105	-.105	-.129		-.127	-.143	-.158				19
20			-.111	-.131		-.139	-.143	-.156				20
21	-.141	-.121	-.121	-.123		-.133	-.137	-.156				21
22	-.121	-.091	-.115	-.111		-.127	-.147	-.167				22
					α= 0	δ= 0.0						
1	.769	.603	.648	.480		.660	.533	.767				1
2	.038	.012	.063	.065		.071	.091	.030				2
3	-.006	-.038	-.016	-.008		.020	.014	-.087				3
4	-.012	-.044	-.036	-.034		-.010	-.010	-.061				4
5	-.028	-.061	-.065	-.056		-.036	-.030	-.067				5
6	-.048	-.069	-.071	-.061		-.052	-.046	-.067				6
7	-.046	-.065	-.073	-.065		-.067	-.065	-.063				7
8	-.054	-.083	-.093	-.077		-.089	-.059	-.079				8
9	-.069	-.095	-.105	-.097		-.097	-.069	-.079				9
10	-.073	-.087		-.083		-.083	-.069	-.099				10
11	-.073	-.081		-.079		-.081						11
12	-.075	-.073		-.079		-.075	-.063	-.107				12
13	-.069	-.061	-.073	-.073		-.075	-.071	-.158				13
14	-.069	-.065	-.079	-.069		-.071	-.078	-.027				14
15	-.081	-.097	-.097	-.081		-.101	-.081	-.137				15
16	-.061	-.115	-.129	-.121		-.117	-.099	.229				16
17		-.109	-.127	-.139		-.141	-.139	-.183				17
18		-.109	-.133	-.117		-.145	-.139	-.154				18
19	-.111	-.151	-.161	-.149		-.165	-.147	-.171				19
20			-.157	-.149		-.159	-.159	-.196				20
21	-.157	-.127	-.161	-.141		-.157	-.155	-.181				21
22	-.113	-.087	-.147	-.149		-.145	-.153	-.167				22
					α= 0	δ= 0.0						
1	.769	.630	.630	.507		.648	.567	.757				1
2	.069	.079	.121	.117		.137	.159	.069				2
3	.034	.014	.030	.030		.075	.071	-.059				3
4	.018	.002	.004	.010		.042	.055	-.046				4
5	.012	-.022	-.020	-.002		.016	.034	-.059				5
6	-.008	-.028	-.026	-.022		.002	.012	-.071				6
7	-.010	-.026	-.032	-.028		-.010	-.008	-.073				7
8	-.028	-.050	-.048	-.042		-.036	-.012	-.083				8
9	-.028	-.061	-.063	-.059		-.048	-.018	-.081				9
10	-.042	-.055		-.046		-.038	-.030	-.103				10
11	-.044	-.044		-.044		-.036						11
12	-.042	-.030		-.042		-.030	-.020	-.103				12
13	-.034	-.034	-.034	-.046		-.030	-.030	-.015				13
14	-.030	-.032	-.042	-.036		-.030	-.034	-.125				14
15	-.038	-.069	-.061	-.052		-.071	-.048	-.190				15
16	.044	-.105	-.115	-.127		-.131	-.103	-.100				16
17		-.075	-.105	-.117		-.103	-.107	-.194				17
18		-.188	-.155	-.184		-.172	-.192	-.246				18
19	-.190	-.220	-.222	-.242		-.226	-.254	-.256				19
20			-.232	-.238		-.246	-.258	-.267				20
21	-.208	-.250	-.234	-.244		-.246	-.260	-.261				21
22	-.176	-.186	-.212	-.212		-.228	-.260	-.056				22

Table 7 Continued

Pressure coefficients on swept wing

Configuration 1 M=1.61 R=1.7 x 10^6

Orif	Station 1	2	3	4	24	5	6	7	8	9	10	Orif
					α= 0	δ= 5.0						
1	.769	.620	.656	.501		.660	.553	.771				1
2	.048	.026	.063	.079		.093	.109	.036				2
3	.002	-.034	-.016	-.008		.022	.018	-.099				3
4	-.010	-.036	-.034	-.034		-.008	-.006	-.067				4
5	-.018	-.055	-.055	-.048		-.034	-.020	-.065				5
6	-.040	-.059	-.063	-.065		-.044	-.040	-.077				6
7	-.042	-.059	-.067	-.067		-.059	-.057	-.077				7
8	-.057	-.081	-.091	-.077		-.081	-.065	-.093				8
9	-.059	-.089	-.099	-.095		-.091	-.071	-.089				9
10	-.067	-.085		-.085		-.085	-.085	-.109				10
11	-.073	-.075		-.085		-.083						11
12	-.071	-.069		-.079		-.079	-.071	-.113				12
13	-.067	-.063	-.075	-.079		-.073	-.079	-.008				13
14	-.063	-.067	-.075	-.077		-.071	-.081	-.138				14
15	-.075	-.097	-.103	-.097		-.109	-.097	-.190				15
16	.008	-.111	-.131	-.129		-.139	-.119	-.100				16
17		-.099	-.111	-.117		-.119	-.117	-.206				17
18		-.190	-.184	-.194		-.196	-.210	-.254				18
19	-.180	-.240	-.244	-.254		-.248	-.264	-.288				19
20			-.250	-.254		-.260	-.277	-.282				20
21	-.228	-.246	-.254	-.256		-.264	-.273	-.275				21
22	-.176	-.153	-.222	-.230		-.236	-.260	-.063				22
					α= 0	δ= 10.0						
1	.771	.626	.652	.501		.658	.555	.773				1
2	.046	.020	.061	.079		.079	.103	.026				2
3	-.006	-.038	-.024	-.010		.016	.014	-.115				3
4	-.010	-.040	-.044	-.036		-.020	-.014	-.075				4
5	-.022	-.061	-.059	-.057		-.044	-.030	-.083				5
6	-.042	-.063	-.067	-.071		-.052	-.044	-.077				6
7	-.044	-.063	-.075	-.075		-.067	-.067	-.079				7
8	-.061	-.079	-.095	-.087		-.087	-.075	-.091				8
9	-.059	-.097	-.105	-.107		-.099	-.083	-.087				9
10	-.065	-.085		-.099		-.095	-.091	-.105				10
11	-.073	-.075		-.095		-.093						11
12	-.069	-.073		-.093		-.087	-.083	-.111				12
13	-.069	-.065	-.079	-.091		-.085	-.083	-.023				13
14	-.063	-.073	-.077	-.091		-.079	-.091	-.131				14
15	-.079	-.107	-.107	-.107		-.115	-.103	-.190				15
16	-.008	-.081	-.105	-.127		-.119	-.095	-.081				16
17		-.081	-.085	-.101		-.099	-.093	-.234				17
18		-.234	-.250	-.244		-.242	-.260	-.296				18
19	-.198	-.291	-.289	-.299		-.297	-.305	-.325				19
20			-.295	-.303		-.301	-.313	-.323				20
21	-.266	-.287	-.299	-.299		-.305	-.311	-.323				21
22	-.226	-.157	-.244	-.270		-.268	-.281	-.042				22
					α= 0	δ= 20.0						
1	.763	.620	.652	.499		.662	.557	.775				1
2	.046	.024	.059	.075		.083	.101	.026				2
3	-.002	-.034	-.024	-.010		.010	.004	-.109				3
4	-.014	-.042	-.038	-.040		-.024	-.020	-.073				4
5	-.018	-.057	-.059	-.052		-.042	-.034	-.067				5
6	-.044	-.069	-.067	-.073		-.055	-.052	-.075				6
7	-.046	-.063	-.075	-.081		-.069	-.065	-.077				7
8	-.061	-.081	-.091	-.097		-.093	-.089	-.091				8
9	-.055	-.095	-.101	-.105		-.101	-.093	-.087				9
10	-.067	-.089		-.097		-.099	-.097	-.103				10
11	-.071	-.083		-.099		-.093						11
12	-.073	-.073		-.091		-.089	-.093	-.117				12
13	-.065	-.071	-.083	-.087		-.089	-.095	-.038				13
14	-.061	-.071	-.083	-.091		-.085	-.093	-.079				14
15	-.075	-.095	-.079	-.057		-.032	-.014	-.200				15
16	-.010	-.026	.006	.020		.012	.020	-.056				16
17		-.034	.016	.030		.030	.030	-.292				17
18		-.311	-.315	-.307		-.323	-.327	-.359				18
19	-.256	-.353	-.361	-.355		-.357	-.357	-.384				19
20			-.361	-.361		-.359	-.363	-.384				20
21	-.313	-.349	-.361	-.359		-.357	-.353	-.371				21
22	-.309	-.204	-.273	-.303		-.301	-.315	.013				22

Table 7 Continued

Pressure coefficients on swept wing

Configuration 1 M= 1.61 R=1.7 x 10^6

Orif	Station 1	2	3	4	24	5	6	7	8	9	10	Orif
					α= 0		δ= 30.0					
1	.769	.622	.652	.507		.662	.553	.773				1
2	.042	.020	.052	.079		.081	.103	.028				2
3	-.006	-.040	-.022	-.010		.014	.012	-.117				3
4	-.014	-.040	-.036	-.042		-.026	-.018	-.077				4
5	-.018	-.059	-.055	-.063		-.042	-.032	-.067				5
6	-.042	-.063	-.067	-.069		-.055	-.055	-.075				6
7	-.044	-.063	-.071	-.073		-.067	-.069	-.077				7
8	-.057	-.079	-.093	-.093		-.089	-.081	-.091				8
9	-.059	-.095	-.103	-.105		-.097	-.085	-.087				9
10	-.065	-.087		-.091		-.097	-.097	-.075				10
11	-.069	-.077		-.091		-.097						11
12	-.067	-.069		-.085		-.085	-.087	-.101				12
13	-.063	-.063	-.075	-.093		-.087	-.089	.029				13
14	-.063	-.071	-.075	-.087		-.069	-.050	-.025				14
15	-.069	-.071	.024	.089		.115	.115	-.230				15
16	-.018	.057	.119	.164		.151	.133	-.002				16
17		.034	.103	.145		.149	.133	-.338				17
18		-.373	-.392	-.369		-.379	-.382	-.396				18
19	-.333	-.416	-.412	-.400		-.404	-.398	-.409				19
20			-.402	-.400		-.394	-.390	-.407				20
21	-.373	-.394	-.398	-.390		-.388	-.371	-.377				21
22	-.371	-.277	-.327	-.337		-.333	-.335	.073				22
					α= 0		δ= 49.1					
1	.771	.630	.648	.521		.650	.549	.797				1
2	.042	.022	.058	.079		.085	.108	.048				2
3	-.004	-.038	-.028	-.012		.008	.012	-.083				3
4	-.014	-.040	-.042	-.038		-.026	-.008	-.034				4
5	-.020	-.057	-.061	-.057		-.044	-.026	.016				5
6	-.042	-.063	-.067	-.067		-.052	-.042	.004				6
7	-.044	-.061	-.073	-.073		-.067	-.069	.006				7
8	-.050	-.081	-.093	-.087		-.083	-.073	-.022				8
9	-.057	-.091	-.101	-.099		-.095	-.071	-.006				9
10	-.063	-.085		-.095		-.091	-.083	-.026				10
11	-.069	-.077		-.093		-.093						11
12	-.069	-.073		-.089		-.087	-.077	-.052				12
13	-.065	-.067	-.077	-.087		-.087	-.075	.125				13
14	-.063	-.071	-.057	-.010		.042	.055	-.042				14
15	-.067	.002	.153	.194		.200	.190	-.300				15
16	-.024	.139	.198	.224		.222	.190	.067				16
17		.067	.055	.107		.157	.119	-.384				17
18		-.466	-.440	-.420		-.418	-.398	-.396				18
19	-.414	-.476	-.442	-.430		-.424	-.406	-.400				19
20			-.436	-.426		-.418	-.404	-.400				20
21	-.446	-.450	-.434	-.422		-.418	-.394	-.380				21
22	-.450	-.390	-.412	-.406		-.392	-.367	.090				22
					α=		δ=					

Table 7 Continued

Pressure coefficients on swept wing

Configuration 1 M=1.61 R=1.7 x 10^6

Orif	Station 1	2	3	4	24	5	6	7	8	9	10	Orif
					α= 0		δ= 58.6					
1	.767	.622	.658	.519		.672	.386	.830				1
2	.048	.020	.061	.085		.083	.071	.014				2
3	.000	-.038	-.022	-.004		.016	.012	-.038				3
4	-.012	-.040	-.040	-.032		-.020	-.014	-.016				4
5	-.018	-.055	-.052	-.057		-.042	-.028	.004				5
6	-.038	-.055	-.063	-.067		-.055	-.042	-.004				6
7	-.044	-.057	-.071	-.071		-.061	-.065	-.002				7
8	-.052	-.079	-.087	-.089		-.083	-.077	-.022				8
9	-.059	-.093	-.097	-.101		-.095	-.081	-.022				9
10	-.061	-.087		-.093		-.091	-.087	-.052				10
11	-.067	-.075		-.093		-.091						11
12	-.067	-.069		-.083		-.083	-.079	-.089				12
13	-.065	-.063	-.071	-.085		-.083	-.077	.163				13
14	-.065	-.069	-.042	.028		.040	.061	-.060				14
15	-.059	.028	.174	.210		.188	.200	-.400				15
16	-.016	.153	.206	.230		.222	.200	.121				16
17		.036	-.004	.028		.099	.052	-.409				17
18		-.497	-.468	-.438		-.440	-.416	-.409				18
19	-.440	-.509	-.462	-.444		-.436	-.420	-.415				19
20			-.462	-.440		-.432	-.422	-.413				20
21	-.493	-.480	-.464	-.436		-.438	-.418	-.392				21
22	-.482	-.418	-.444	-.428		-.418	-.398	.106				22
					α= 6		δ= -58.3					
1	.799	.537	.510	.081		.702	.309	.793				1
2	-.085	-.242	-.246	-.226		.169	.196	.008				2
3	-.157	-.226	-.246	-.202		.206	.216	.071				3
4	-.141	-.224	-.262	-.056		.214	.196	.087				4
5	-.149	-.214	-.274	.040		.226	.220	.075				5
6	-.165	-.206	-.270	.125		.272	.252	.083				6
7	-.173	-.202	-.254	.139		.280	.266	.079				7
8	-.182	-.216	-.050	.115		.244	.256	.083				8
9	-.186	-.222	.075	.075		.184	.246	.081				9
10	-.186	-.216		.012		.113	.220	.097				10
11	-.190	-.208		-.034		.061						11
12	-.186	.044		-.061		.022	.186	.184				12
13	-.190	.119	.014	-.077		-.014	.153					13
14	-.127	.117	-.046	-.061		-.040	.119					14
15	.056	.087	.165	.139		-.056	.121					15
16	.109	.153	.597	.335		-.083	.139					16
17		.202	.206	.250		.484	.323					17
18		.811	.627	.381		.038	.180					18
19	.847	.892	.391	.182		.036	.157					19
20			.815	.103		-.026	.127					20
21	.787	1.049	.952	.242		-.038	.099					21
22	.637	.676	.672	.363		-.065	-.010					22
					α= 6		δ= -48.7					
1	.799	.535	.516	.081		.690	.194	.819				1
2	-.091	-.234	-.248	-.266		-.234	-.117	-.163				2
3	-.157	-.230	-.246	-.250		-.149	-.079	-.117				3
4	-.147	-.222	-.264	-.266		-.087	-.099	-.073				4
5	-.153	-.216	-.272	-.272		-.024	-.065	-.030				5
6	-.165	-.208	-.266	-.262		.028	.020	-.020				6
7	-.173	-.200	-.252	-.186		.099	.081	-.034				7
8	-.182	-.210	-.250	-.105		.109	.117	-.050				8
9	-.190	-.218	-.250	-.032		.091	.131	-.059				9
10	-.192	-.212		.012		.042	.127	-.024				10
11	-.192	-.206		.030		.004						11
12	-.194	-.204		.012		-.022	.119	.036				12
13	-.194	-.135	.105	-.004		-.042	.105					13
14	-.186	.067	.097	-.012		-.056	.071					14
15	-.135	.149	.052	.014		-.077	.069					15
16	-.020	.000	-.061	.024		-.113	.077					16
17		.196	.254	.282		.391	.290					17
18		.335	.446	.270		.056	.101					18
19	.527	.524	.188	.069		.004	.105					19
20			.938	.190		-.042	.087					20
21	.529	.880	.968	.537		-.008	.063					21
22	.480	.571	.627	.629		-.036	-.032					22

Table 7 Continued

Pressure coefficients on swept wing

Configuration 1 M=1.61 R=1.7 x 10^6

Orif	Station 1	2	3	4	24	5	6	7	8	9	10	Orif
					α= 6		δ= -39.1					
1	.795	.539	.512	.081		.684	.188	.833				1
2	-.087	-.238	-.250	-.262		-.278	-.282	-.240				2
3	-.171	-.234	-.248	-.256		-.262	-.268	-.250				3
4	-.149	-.226	-.264	-.268		-.268	-.268	-.232				4
5	-.155	-.220	-.276	-.268		-.266	-.186	-.169				5
6	-.173	-.210	-.266	-.278		-.252	-.099	-.163				6
7	-.178	-.208	-.258	-.282		-.155	-.079	-.184				7
8	-.182	-.210	-.250	-.293		-.089	-.077	-.210				8
9	-.190	-.222	-.248	-.286		-.052	-.048	-.228				9
10	-.186	-.216		-.188		-.048	-.026	-.198				10
11	-.194	-.208		-.107		.008						11
12	-.194	-.204		-.048		.012	.018	-.145				12
13	-.198	-.200	-.022	.034		.006	.026					13
14	-.192	-.139	.089	.054		-.002	.032					14
15	-.186	.079	.109	.050		-.026	.050					15
16	-.129	.089	.034	-.024		-.054	.044					16
17		.103	.206	.151		.141	.121					17
18		.111	.206	.137		.038	.061					18
19	.222	.377	.155	.048		.002	.077					19
20			.466	.157		-.016	.087					20
21	.282	.617	.831	.363		.014	.083					21
22	.301	.428	.522	.510		-.034	-.010					22
					α= 6		δ= -30.0					
1	.807	.543	.527	.089		.686	.194	.827				1
2	-.077	-.236	-.234	-.256		-.270	-.278	-.244				2
3	-.157	-.226	-.236	-.248		-.258	-.272	-.254				3
4	-.143	-.218	-.250	-.260		-.264	-.274	-.264				4
5	-.147	-.210	-.270	-.264		-.266	-.280	-.244				5
6	-.157	-.202	-.264	-.274		-.268	-.282	-.274				6
7	-.163	-.198	-.252	-.282		-.276	-.293	-.297				7
8	-.173	-.204	-.248	-.282		-.288	-.293	-.345				8
9	-.178	-.210	-.244	-.293		-.297	-.282	-.373				9
10	-.182	-.208		-.286		-.288	-.258	-.365				10
11	-.186	-.204		-.280		-.190						11
12	-.186	-.192		-.252		-.137	-.157	-.341				12
13	-.182	-.180	-.210	-.089		-.119	-.119					13
14	-.178	-.186	-.044	-.056		-.089	-.095					14
15	-.188	-.052	.030	.008		-.038	-.038					15
16	-.165	.030	.054	.024		-.038	-.024					16
17		.012	.054	-.067		-.129	-.028					17
18		.010	.075	.024		-.020	-.020					18
19	.002	.200	.099	.010		-.034	-.016					19
20			.224	.083		-.038	.002					20
21	.046	.232	.323	.153		-.020	.008					21
22	.073	.176	.250	.165		-.067	-.052					22
					α= 6		δ= -20.0					
1	.807	.533	.514	.085		.682	.206	.827				1
2	-.081	-.236	-.242	-.258		-.270	-.262	-.228				2
3	-.149	-.228	-.240	-.248		-.258	-.256	-.246				3
4	-.139	-.222	-.260	-.258		-.266	-.262	-.254				4
5	-.141	-.216	-.272	-.264		-.266	-.268	-.230				5
6	-.157	-.204	-.268	-.274		-.270	-.274	-.260				6
7	-.165	-.198	-.254	-.280		-.276	-.280	-.278				7
8	-.178	-.206	-.248	-.282		-.282	-.282	-.337				8
9	-.186	-.218	-.250	-.293		-.290	-.282	-.363				9
10	-.184	-.210		-.286		-.290	-.286	-.371				10
11	-.186	-.206		-.284		-.288						11
12	-.186	-.200		-.270		-.282	-.278	-.383				12
13	-.182	-.194	-.214	-.252		-.282	-.278					13
14	-.182	-.192	-.210	-.242		-.274	-.276					14
15	-.190	-.194	-.169	-.180		-.204	-.182					15
16	-.186	-.093	-.097	-.101		-.145	-.133					16
17		-.085	-.087	-.129		-.157	-.125					17
18		-.111	-.097	-.137		-.169	-.178					18
19	-.141	-.079	-.085	-.135		-.178	-.196					19
20			-.079	-.117		-.178	-.188					20
21	-.139	-.101	-.071	-.109		-.165	-.173					21
22	-.119	-.071	-.069	-.091		-.159	-.173					22

Table 7 Continued

Pressure coefficients on swept wing

Configuration 1 M=1.61 R=1.7 x 10^6

Orif	Station 1	2	3	4	24	5	6	7	8	9	10	Orif
					α= 6		δ= -10.0					
1	.803	.543	.520	.097		.692	.202	.817				1
2	-.085	-.224	-.228	-.248		-.254	-.266	-.230				2
3	-.153	-.222	-.236	-.238		-.240	-.254	-.238				3
4	-.133	-.210	-.246	-.250		-.246	-.258	-.246				4
5	-.141	-.204	-.258	-.252		-.248	-.268	-.226				5
6	-.157	-.198	-.256	-.264		-.256	-.270	-.252				6
7	-.163	-.194	-.242	-.266		-.264	-.284	-.270				7
8	-.173	-.204	-.240	-.274		-.286	-.278	-.313				8
9	-.182	-.216	-.238	-.280		-.290	-.276	-.351				9
10	-.182	-.204		-.268		-.284	-.278	-.365				10
11	-.182	-.200		-.268		-.282						11
12	-.182	-.194		-.258		-.276	-.268	-.371				12
13	-.184	-.184	-.204	-.238		-.278	-.266					13
14	-.180	-.186	-.200	-.226		-.274	-.276					14
15	-.188	-.206	-.210	-.230		-.276	-.238					15
16	-.186	-.161	-.163	-.176		-.206	-.186					16
17		-.123	-.135	-.149		-.169	-.165					17
18		-.194	-.202	-.220		-.278	-.276					18
19	-.190	-.218	-.220	-.242		-.299	-.297					19
20			-.222	-.246		-.295	-.295					20
21	-.224	-.222	-.224	-.238		-.286	-.278					21
22	-.180	-.125	-.171	-.196		-.218	-.238					22
					α= 6		δ= 0.0					
1	.799	.535	.510	.105		.686	.218	.815				1
2	-.081	-.208	-.208	-.228		-.218	-.224	-.198				2
3	-.143	-.208	-.224	-.228		-.214	-.220	-.220				3
4	-.131	-.200	-.240	-.236		-.224	-.216	-.214				4
5	-.139	-.200	-.256	-.236		-.228	-.226	-.214				5
6	-.153	-.196	-.244	-.246		-.238	-.240	-.226				6
7	-.159	-.188	-.236	-.250		-.248	-.250	-.234				7
8	-.171	-.196	-.228	-.252		-.254	-.234	-.256				8
9	-.178	-.208	-.232	-.260		-.262	-.238	-.282				9
10	-.180	-.204		-.250		-.254	-.232	-.303				10
11	-.186	-.194		-.250		-.242						11
12	-.182	-.188		-.244		-.240	-.226	-.313				12
13	-.180	-.184	-.198	-.228		-.232	-.234	-.371				13
14	-.171	-.180	-.198	-.214		-.242	-.234	-.265				14
15	-.180	-.196	-.204	-.208		-.246	-.198	-.281				15
16	-.180	-.167	-.163	-.171		-.186	-.155	.125				16
17		-.123	-.137	-.155		-.159	-.153	-.267				17
18		-.188	-.208	-.194		-.258	-.230	-.271				18
19	-.173	-.214	-.224	-.220		-.266	-.246	-.287				19
20			-.214	-.220		-.254	-.242	-.294				20
21	-.230	-.200	-.220	-.210		-.238	-.238	-.281				21
22	-.169	-.119	-.167	-.190		-.186	-.212	-.271				22
					α= 6		δ= 0.0					
1	.805	.535	.571	.198		.696	.297	.795				1
2	-.038	-.127	-.109	-.129		-.119	-.117	-.123				2
3	-.097	-.149	-.151	-.161		-.139	-.149	-.157				3
4	-.091	-.139	-.172	-.168		-.159	-.149	-.157				4
5	-.103	-.143	-.188	-.174		-.164	-.161	-.157				5
6	-.119	-.143	-.182	-.190		-.178	-.178	-.166				6
7	-.119	-.141	-.172	-.190		-.184	-.190	-.161				7
8	-.143	-.155	-.180	-.194		-.196	-.184	-.178				8
9	-.135	-.164	-.184	-.208		-.202	-.190	-.194				9
10	-.143	-.157		-.192		-.198	-.192	-.210				10
11	-.143	-.151		-.188		-.196						11
12	-.147	-.139		-.182		-.192	-.180	-.234				12
13	-.141	-.135	-.159	-.178		-.190	-.192	-.177				13
14	-.137	-.137	-.161	-.164		-.184	-.182	-.225				14
15	-.139	-.155	-.151	-.143		-.172	-.139	-.300				15
16	-.097	-.123	-.119	-.123		-.115	-.109	-.179				16
17		-.091	-.101	-.109		-.105	-.115	-.332				17
18		-.283	-.252	-.287		-.303	-.321	-.355				18
19	-.262	-.319	-.309	-.329		-.339	-.359	-.359				19
20			-.313	-.327		-.345	-.353	-.359				20
21	-.303	-.327	-.317	-.333		-.345	-.355	-.350				21
22	-.250	-.200	-.264	-.283		-.299	-.321	-.100				22

Table 7 Continued

Pressure coefficients on swept wing

Configuration 1 M=1.61 R=1.7 x 10^6

Orif	Station 1	2	3	4	24	5	6	7	8	9	10	Orif
					α= 6		δ= 10.0					
1	.799	.521	.557	.149		.696	.236	.797				1
2	-.057	-.184	-.176	-.198		-.190	-.198	-.182				2
3	-.121	-.186	-.198	-.202		-.192	-.204	-.192				3
4	-.109	-.180	-.218	-.218		-.206	-.212	-.200				4
5	-.125	-.178	-.228	-.220		-.210	-.218	-.204				5
6	-.141	-.174	-.220	-.232		-.222	-.228	-.206				6
7	-.141	-.170	-.210	-.234		-.228	-.234	-.208				7
8	-.161	-.182	-.218	-.234		-.244	-.236	-.234				8
9	-.161	-.194	-.218	-.250		-.252	-.240	-.254				9
10	-.164	-.184		-.234		-.246	-.240	-.287				10
11	-.166	-.174		-.230		-.244						11
12	-.164	-.172		-.216		-.242	-.228	-.303				12
13	-.159	-.161	-.182	-.212		-.236	-.236	-.252				13
14	-.159	-.168	-.186	-.200		-.236	-.234	-.277				14
15	-.172	-.186	-.186	-.182		-.214	-.172	-.320				15
16	-.129	-.127	-.113	-.109		-.133	-.121	-.238				16
17		-.099	-.095	-.103		-.119	-.113	-.359				17
18		-.291	-.275	-.293		-.329	-.339	-.371				18
19	-.268	-.331	-.329	-.343		-.363	-.375	-.386				19
20			-.333	-.343		-.369	-.375	-.392				20
21	-.313	-.335	-.339	-.343		-.369	-.363	-.382				21
22	-.270	-.178	-.240	-.270		-.285	-.309	-.106				22
					α= 6		δ= 20.0					
1	.799	.523	.555	.137		.698	.244	.793				1
2	-.061	-.198	-.202	-.222		-.226	-.222	-.184				2
3	-.129	-.200	-.208	-.216		-.218	-.214	-.192				3
4	-.119	-.190	-.230	-.234		-.230	-.226	-.220				4
5	-.129	-.190	-.236	-.238		-.234	-.232	-.218				5
6	-.143	-.182	-.236	-.250		-.240	-.232	-.224				6
7	-.149	-.180	-.214	-.252		-.250	-.246	-.228				7
8	-.161	-.190	-.222	-.262		-.252	-.250	-.258				8
9	-.166	-.198	-.226	-.266		-.262	-.252	-.289				9
10	-.166	-.190		-.252		-.258	-.256	-.317				10
11	-.170	-.182		-.246		-.258						11
12	-.168	-.178		-.232		-.254	-.246	-.333				12
13	-.166	-.174	-.194	-.224		-.252	-.248	-.259				13
14	-.164	-.174	-.190	-.214		-.232	-.238	-.275				14
15	-.168	-.182	-.111	-.099		-.103	-.089	-.370				15
16	-.127	-.065	-.018	-.006		-.046	-.042	-.271				16
17		-.038	-.010	-.008		-.004	.036	-.409				17
18		-.359	-.363	-.359		-.386	-.388	-.409				18
19	-.341	-.396	-.396	-.396		-.406	-.406	-.430				19
20			-.394	-.396		-.400	-.398	-.430				20
21	-.367	-.384	-.384	-.386		-.398	-.384	-.409				21
22	-.351	-.246	-.285	-.303		-.309	-.321	-.075				22
					α= 6		δ= 30.0					
1	.807	.523	.565	.141		.698	.240	.789				1
2	-.055	-.200	-.206	-.222		-.234	-.236	-.192				2
3	-.131	-.194	-.210	-.214		-.220	-.228	-.194				3
4	-.113	-.188	-.230	-.234		-.230	-.240	-.224				4
5	-.125	-.182	-.238	-.238		-.234	-.240	-.220				5
6	-.143	-.178	-.234	-.248		-.240	-.252	-.222				6
7	-.147	-.172	-.212	-.252		-.250	-.260	-.224				7
8	-.161	-.184	-.222	-.256		-.262	-.264	-.260				8
9	-.161	-.196	-.224	-.266		-.273	-.264	-.293				9
10	-.164	-.186		-.256		-.266	-.260	-.325				10
11	-.168	-.182		-.250		-.268						11
12	-.168	-.172		-.230		-.262	-.256	-.349				12
13	-.166	-.161	-.192	-.226		-.262	-.258	-.321				13
14	-.161	-.172	-.192	-.206		-.194	-.210	-.307				14
15	-.166	-.145	-.036	-.002		-.030	-.018	-.410				15
16	-.133	-.004	.028	.050		-.008	.004	-.290				16
17		-.020	-.008	-.008		-.028	.038	-.434				17
18		-.402	-.414	-.398		-.430	-.416	-.425				18
19	-.384	-.434	-.432	-.422		-.442	-.422	-.442				19
20			-.416	-.404		-.424	-.412	-.434				20
21	-.400	-.410	-.396	-.394		-.412	-.396	-.421				21
22	-.398	-.303	-.339	-.349		-.353	-.351	-.048				22

Table 7 Continued

Pressure coefficients on swept wing

Configuration 1 M=1.61 R=1.7 x 10^6

Orif	Station 1	2	3	4	24	5	6	7	8	9	10	Orif
					α= 6		δ= 39.5					
1	.803	.519	.563	.143		.702	.238	.882				1
2	-.061	-.206	-.216	-.236		-.236	-.236	-.214				2
3	-.127	-.196	-.218	-.220		-.222	-.226	-.206				3
4	-.111	-.194	-.236	-.240		-.232	-.238	-.218				4
5	-.123	-.188	-.244	-.246		-.236	-.240	-.218				5
6	-.141	-.180	-.238	-.252		-.246	-.250	-.226				6
7	-.143	-.180	-.218	-.256		-.252	-.262	-.242				7
8	-.164	-.192	-.228	-.262		-.262	-.266	-.279				8
9	-.164	-.200	-.230	-.273		-.275	-.264	-.311				9
10	-.164	-.188		-.260		-.270	-.264	-.343				10
11	-.168	-.188		-.250		-.268						11
12	-.164	-.176		-.232		-.266	-.254	-.377				12
13	-.166	-.172	-.198	-.226		-.264	-.254	-.359				13
14	-.159	-.174	-.186	-.176		-.129	-.147	-.340				14
15	-.161	-.115	.006	.030		-.004	.010	-.410				15
16	-.123	.022	.055	.067		.020	.022	-.313				16
17		-.063	-.081	-.085		-.121	-.089	-.440				17
18		-.452	-.454	-.420		-.448	-.426	-.434				18
19	-.414	-.472	-.456	-.434		-.454	-.430	-.438				19
20			-.436	-.422		-.442	-.420	-.430				20
21	-.440	-.438	-.422	-.410		-.432	-.414	-.421				21
22	-.436	-.357	-.390	-.390		-.394	-.386	.002				22
					α= 6		δ= 49.3					
1	.811	.523	.567	.143		.692	.149	.818				1
2	-.055	-.196	-.216	-.224		-.236	-.254	-.277				2
3	-.123	-.198	-.212	-.216		-.228	-.234	-.258				3
4	-.111	-.188	-.230	-.232		-.236	-.244	-.262				4
5	-.121	-.180	-.236	-.238		-.240	-.244	-.273				5
6	-.137	-.174	-.236	-.250		-.248	-.244	-.289				6
7	-.145	-.176	-.216	-.254		-.252	-.254	-.297				7
8	-.159	-.186	-.224	-.262		-.258	-.260	-.327				8
9	-.161	-.192	-.226	-.268		-.273	-.264	-.345				9
10	-.166	-.188		-.258		-.268	-.264	-.367				10
11	-.164	-.182		-.248		-.268						11
12	-.164	-.174		-.232		-.262	-.252	-.396				12
13	-.164	-.168	-.192	-.226		-.260	-.256	-.400				13
14	-.159	-.172	-.153	-.131		-.093	-.115	-.371				14
15	-.157	-.071	.032	.036		.006	.018	-.400				15
16	-.117	.042	.063	.081		.032	.034	-.340				16
17		-.105	-.176	-.157		-.161	-.170	-.444				17
18		-.468	-.454	-.426		-.446	-.436	-.453				18
19	-.426	-.486	-.458	-.434		-.454	-.438	-.448				19
20			-.446	-.428		-.442	-.428	-.438				20
21	-.454	-.450	-.436	-.418		-.438	-.422	-.430				21
22	-.458	-.396	-.414	-.408		-.410	-.402	.050				22
					α= 6		δ= 59.0					
1	.805	.527	.567	.139		.709	-.050	.696				1
2	-.063	-.204	-.214	-.228		-.248	-.333	-.394				2
3	-.135	-.200	-.214	-.212		-.224	-.303	-.365				3
4	-.117	-.194	-.234	-.234		-.232	-.273	-.373				4
5	-.129	-.186	-.238	-.248		-.238	-.264	-.396				5
6	-.147	-.180	-.232	-.252		-.242	-.266	-.402				6
7	-.151	-.176	-.212	-.256		-.250	-.268	-.398				7
8	-.166	-.190	-.224	-.260		-.254	-.268	-.406				8
9	-.168	-.198	-.224	-.275		-.262	-.264	-.414				9
10	-.170	-.188		-.260		-.260	-.266	-.424				10
11	-.170	-.182		-.248		-.260						11
12	-.172	-.178		-.230		-.256	-.254	-.444				12
13	-.172	-.168	-.196	-.228		-.252	-.256	-.438				13
14	-.166	-.174	-.127	-.083		-.067	-.079	-.417				14
15	-.159	-.046	.038	.061		.026	.014	-.430				15
16	-.119	.052	.067	.089		.044	.028	-.392				16
17		-.188	-.297	-.246		-.198	-.252	-.459				17
18		-.497	-.476	-.442		-.450	-.444	-.455				18
19	-.448	-.507	-.474	-.450		-.454	-.448	-.457				19
20			-.466	-.448		-.446	-.442	-.450				20
21	-.495	-.472	-.466	-.446		-.448	-.438	-.434				21
22	-.489	-.426	-.452	-.434		-.430	-.424	.090				22

Table 7 Continued

Pressure coefficients on swept wing

Configuration 1 M=1.61 R=1.7 x 10^6

Orif	Station 1	2	3	4	24	5	6	7	8	9	10	Orif
					α= 12		δ= -58.7					
1	.855	.159	.087	-.317		.547	-.010	.756				1
2	-.176	-.385	-.401	-.389		-.226	-.105	-.127				2
3	-.248	-.369	-.397	-.321		-.200	-.101	-.103				3
4	-.228	-.367	-.389	-.288		-.161	-.137	-.107				4
5	-.230	-.365	-.381	-.238		-.127	-.127	-.081				5
6	-.246	-.347	-.349	-.171		-.083	-.095	-.065				6
7	-.248	-.309	-.327	-.123		-.063	-.093	-.059				7
8	-.260	-.278	-.286	-.089		-.073	-.119	-.048				8
9	-.264	-.290	-.244	-.077		-.089	-.113	-.032				9
10	-.264	-.276		-.079		-.089	-.119	-.006				10
11	-.260	-.248		-.091		-.087						11
12	-.264	-.111		-.117		-.081	-.087	.008				12
13	-.230	.042	-.163	-.149		-.079	-.052					13
14	-.127	.095	-.127	-.155		-.097	-.034					14
15	-.014	.107	.028	-.131		-.121	.002					15
16	.010	.204	.107	-.180		-.101	.008					16
17		.303	.375	.658		.678	.702					17
18		.369	.351	-.004		-.089	.032					18
19	.232	.426	.056	-.028		-.044	.061					19
20			.169	-.121		-.048	.079					20
21	.769	1.007	.462	-.119		-.056	.101					21
22	.597	.646	.539	-.119		-.097	.044					22
					α= 12		δ= -49.0					
1	.857	.163	.087	-.321		.520	-.139	.738				1
2	-.173	-.385	-.401	-.430		-.448	-.454	-.375				2
3	-.244	-.373	-.397	-.410		-.424	-.432	-.395				3
4	-.220	-.367	-.399	-.403		-.403	-.424	-.379				4
5	-.228	-.365	-.399	-.375		-.375	-.403	-.359				5
6	-.244	-.345	-.385	-.331		-.315	-.371	-.347				6
7	-.244	-.309	-.381	-.280		-.226	-.351	-.339				7
8	-.260	-.280	-.371	-.218		-.178	-.329	-.325				8
9	-.260	-.293	-.345	-.153		-.133	-.311	-.303				9
10	-.258	-.284		-.115		-.121	-.284	-.272				10
11	-.262	-.276		-.085		-.089						11
12	-.262	-.276		-.077		-.056	-.173	-.208				12
13	-.266	-.149	-.214	-.105		-.044	-.085					13
14	-.252	.006	-.161	-.131		-.028	-.004					14
15	-.161	.095	-.091	-.153		-.020	.046					15
16	-.085	.034	-.155	-.186		-.024	.052					16
17		.087	.139	.399		.535	.623					17
18		.188	.182	-.042		.006	.103					18
19	.293	.311	.022	-.042		.046	.147					19
20			.214	-.091		.012	.186					20
21	.430	.752	.531	-.101		.012	.216					21
22	.393	.498	.520	-.147		-.071	.165					22
					α= 12		δ= -39.2					
1	.847	.159	.089	-.327		.512	-.147	.732				1
2	-.178	-.387	-.397	-.434		-.454	-.482	-.510				2
3	-.248	-.375	-.395	-.422		-.434	-.458	-.510				3
4	-.226	-.371	-.399	-.418		-.422	-.444	-.510				4
5	-.232	-.365	-.410	-.416		-.412	-.432	-.520				5
6	-.250	-.351	-.407	-.410		-.397	-.428	-.518				6
7	-.246	-.311	-.401	-.410		-.373	-.424	-.506				7
8	-.260	-.286	-.395	-.397		-.349	-.414	-.502				8
9	-.260	-.297	-.385	-.369		-.315	-.401	-.492				9
10	-.260	-.293		-.337		-.288	-.387	-.484				10
11	-.266	-.282		-.293		-.250						11
12	-.262	-.280		-.248		-.204	-.311	-.442				12
13	-.266	-.270	-.337	-.210		-.167	-.226					13
14	-.262	-.186	-.244	-.184		-.139	-.131					14
15	-.254	.008	-.135	-.161		-.143	-.095					15
16	-.210	.036	-.123	-.147		-.161	-.095					16
17		-.097	-.200	-.224		-.125	-.006					17
18		.044	.014	-.099		-.107	-.030					18
19	.050	.169	.099	-.054		-.056	.002					19
20			.280	-.046		-.065	.046					20
21	.109	.355	.420	-.054		-.075	.056					21
22	.123	.250	.325	-.131		-.133	-.018					22

Table 7 Continued

Pressure coefficients on swept wing

Configuration 1 M=1.61 R=1.7 x 10^6

Orif	Station 1	2	3	4	24	5	6	7	8	9	10	Orif
					α= 12		δ= -30.0					
1	.853	.155	.081	-.309		.527	-.137	.734				1
2	-.176	-.389	-.397	-.424		-.442	-.464	-.504				2
3	-.252	-.369	-.393	-.405		-.412	-.442	-.502				3
4	-.224	-.365	-.393	-.405		-.414	-.434	-.498				4
5	-.236	-.365	-.397	-.401		-.403	-.426	-.516				5
6	-.248	-.347	-.401	-.401		-.403	-.426	-.508				6
7	-.246	-.307	-.397	-.405		-.403	-.426	-.498				7
8	-.264	-.280	-.395	-.405		-.422	-.420	-.498				8
9	-.262	-.293	-.391	-.410		-.418	-.420	-.496				9
10	-.264	-.286		-.401		-.410	-.412	-.492				10
11	-.264	-.286		-.393		-.393						11
12	-.266	-.284		-.361		-.361	-.389	-.484				12
13	-.266	-.274	-.373	-.339		-.327	-.375					13
14	-.262	-.270	-.329	-.286		-.293	-.345					14
15	-.266	-.119	-.204	-.230		-.260	-.272					15
16	-.250	-.042	-.081	-.192		-.252	-.258					16
17		-.111	-.186	-.232		-.295	-.270					17
18		-.050	-.054	-.155		-.216	-.228					18
19	-.095	.034	.143	-.065		-.147	-.145					19
20			.190	-.038		-.141	-.087					20
21	-.050	.075	.182	-.048		-.129	-.085					21
22	-.030	.042	.107	-.107		-.135	-.119					22
					α= 12		δ= -20.0					
1	.857	.161	.095	-.307		.524	-.141	.742				1
2	-.176	-.377	-.387	-.420		-.432	-.460	-.494				2
3	-.246	-.367	-.389	-.403		-.416	-.444	-.478				3
4	-.224	-.363	-.391	-.405		-.410	-.428	-.480				4
5	-.228	-.361	-.399	-.397		-.405	-.422	-.496				5
6	-.238	-.343	-.397	-.403		-.405	-.426	-.498				6
7	-.240	-.307	-.395	-.401		-.403	-.426	-.490				7
8	-.260	-.278	-.389	-.401		-.422	-.422	-.486				8
9	-.260	-.297	-.387	-.410		-.422	-.420	-.486				9
10	-.260	-.290		-.407		-.418	-.412	-.486				10
11	-.262	-.282		-.403		-.410						11
12	-.258	-.280		-.395		-.403	-.397	-.498				12
13	-.262	-.272	-.369	-.393		-.391	-.391					13
14	-.258	-.270	-.341	-.377		-.387	-.387					14
15	-.262	-.264	-.299	-.351		-.379	-.365					15
16	-.256	-.145	-.173	-.313		-.357	-.359					16
17		-.103	-.147	-.218		-.286	-.258					17
18		-.149	-.165	-.307		-.375	-.365					18
19	-.188	-.139	-.097	-.262		-.349	-.333					19
20			-.101	-.236		-.337	-.319					20
21	-.178	-.149	-.101	-.224		-.323	-.290					21
22	-.127	-.093	-.099	-.176		-.244	-.240					22
					α= 12		δ= -10.0					
1	.853	.167	.097	-.299		.527	-.127	.744				1
2	-.173	-.373	-.383	-.414		-.418	-.428	-.464				2
3	-.240	-.365	-.387	-.399		-.401	-.422	-.458				3
4	-.222	-.361	-.387	-.395		-.395	-.403	-.454				4
5	-.226	-.359	-.395	-.389		-.393	-.405	-.474				5
6	-.234	-.343	-.391	-.391		-.397	-.407	-.476				6
7	-.240	-.309	-.383	-.393		-.399	-.407	-.466				7
8	-.258	-.280	-.383	-.393		-.403	-.399	-.464				8
9	-.258	-.293	-.379	-.403		-.405	-.399	-.464				9
10	-.258	-.286		-.391		-.397	-.395	-.464				10
11	-.266	-.280		-.391		-.397						11
12	-.260	-.278		-.389		-.391	-.381	-.472				12
13	-.258	-.270	-.361	-.387		-.375	-.375					13
14	-.256	-.266	-.339	-.371		-.375	-.383					14
15	-.258	-.280	-.309	-.355		-.379	-.363					15
16	-.254	-.192	-.212	-.337		-.359	-.359					16
17		-.113	-.157	-.210		-.252	-.242					17
18		-.250	-.236	-.337		-.387	-.391					18
19	-.238	-.264	-.258	-.363		-.383	-.383					19
20			-.262	-.359		-.381	-.373					20
21	-.270	-.264	-.266	-.343		-.377	-.359					21
22	-.194	-.119	-.206	-.238		-.276	-.280					22

Table 7 Continued

Pressure coefficients on swept wing

Configuration 1 M=1.61 R=1.7 x 10^6

Orif	Station 1	2	3	4	24	5	6	7	8	9	10	Orif
					α= 12		δ= 0.0					
1	.859	.188	.127	-.232		.529	-.091	.738				1
2	-.155	-.339	-.341	-.371		-.363	-.385	-.399				2
3	-.222	-.327	-.353	-.365		-.351	-.375	-.387				3
4	-.202	-.323	-.365	-.359		-.345	-.353	-.381				4
5	-.210	-.323	-.369	-.351		-.349	-.355	-.395				5
6	-.222	-.315	-.363	-.357		-.359	-.369	-.410				6
7	-.228	-.278	-.357	-.359		-.359	-.369	-.391				7
8	-.246	-.264	-.349	-.359		-.367	-.345	-.397				8
9	-.246	-.274	-.351	-.369		-.369	-.355	-.410				9
10	-.242	-.270		-.357		-.357	-.347	-.414				10
11	-.244	-.258		-.357		-.357						11
12	-.248	-.256		-.355		-.349	-.333	-.410				12
13	-.246	-.250	-.323	-.351		-.339	-.335					13
14	-.244	-.244	-.309	-.333		-.341	-.339					14
15	-.242	-.258	-.282	-.309		-.343	-.303					15
16	-.244	-.188	-.200	-.303		-.311	-.301					16
17		-.101	-.163	-.206		-.224	-.220					17
18		-.252	-.260	-.303		-.357	-.333					18
19	-.230	-.278	-.290	-.325		-.359	-.329					19
20			-.286	-.333		-.355	-.327					20
21	-.280	-.254	-.286	-.315		-.345	-.307					21
22	-.212	-.125	-.194	-.230		-.266	-.276					22
					α= 12		δ= 0.0					
1	.850	.232	.220	-.139		.555	-.012	.769				1
2	-.135	-.291	-.293	-.327		-.333	-.361	-.379				2
3	-.198	-.289	-.305	-.315		-.321	-.341	-.373				3
4	-.180	-.283	-.319	-.323		-.321	-.333	-.390				4
5	-.190	-.289	-.329	-.327		-.325	-.331	-.396				5
6	-.202	-.273	-.325	-.333		-.327	-.335	-.396				6
7	-.204	-.248	-.315	-.331		-.333	-.335	-.400				7
8	-.222	-.242	-.317	-.337		-.329	-.333	-.414				8
9	-.224	-.256	-.319	-.339		-.337	-.333	-.430				9
10	-.226	-.244		-.335		-.329	-.333	-.442				10
11	-.228	-.236		-.331		-.329						11
12	-.228	-.234		-.323		-.323	-.313	-.462				12
13	-.228	-.228	-.289	-.321		-.317	-.317	-.457				13
14	-.224	-.228	-.270	-.283		-.287	-.283	-.446				14
15	-.226	-.232	-.230	-.248		-.264	-.232	-.460				15
16	-.194	-.155	-.174	-.236		-.226	-.220	-.421				16
17		-.131	-.182	-.214		-.224	-.216	-.482				17
18		-.371	-.329	-.398		-.412	-.412	-.475				18
19	-.343	-.402	-.394	-.422		-.434	-.432	-.471				19
20			-.396	-.424		-.432	-.430	-.469				20
21	-.390	-.390	-.404	-.418		-.434	-.420	-.455				21
22	-.321	-.224	-.285	-.317		-.349	-.361	-.129				22
					α= 12		δ= 10.0					
1	.860	.198	.151	-.226		.557	-.081	.759				1
2	-.153	-.335	-.339	-.367		-.375	-.404	-.434				2
3	-.212	-.325	-.343	-.359		-.359	-.390	-.438				3
4	-.198	-.321	-.351	-.357		-.359	-.375	-.444				4
5	-.202	-.323	-.359	-.355		-.361	-.371	-.452				5
6	-.222	-.309	-.355	-.365		-.363	-.382	-.450				6
7	-.224	-.275	-.351	-.365		-.365	-.382	-.446				7
8	-.240	-.262	-.349	-.367		-.377	-.373	-.458				8
9	-.240	-.270	-.349	-.371		-.377	-.369	-.470				9
10	-.242	-.258		-.363		-.371	-.373	-.474				10
11	-.246	-.256		-.363		-.371						11
12	-.244	-.254		-.355		-.361	-.349	-.489				12
13	-.242	-.246	-.327	-.355		-.349	-.353	-.482				13
14	-.238	-.244	-.299	-.331		-.337	-.335	-.473				14
15	-.244	-.252	-.254	-.295		-.325	-.303	-.480				15
16	-.216	-.153	-.133	-.266		-.293	-.291	-.448				16
17		-.085	-.085	-.135		-.149	-.127	-.500				17
18		-.363	-.337	-.402		-.434	-.438					18
19	-.341	-.400	-.392	-.436		-.450	-.452					19
20			-.396	-.440		-.438	-.436	-.482				20
21	-.379	-.390	-.396	-.416		-.436	-.422	-.463				21
22	-.319	-.210	-.260	-.325		-.341	-.355	-.115				22

Table 7 Continued

Pressure coefficients on swept wing

Configuration 1 M=1.61 R=1.7 x 10^6

Orif	Station 1	2	3	4	24	5	6	7	8	9	10	Orif
					α= 12		δ= 20.0					
1	.852	.186	.135	-.268		.555	-.095	.773				1
2	-.161	-.353	-.361	-.388		-.406	-.426	-.462				2
3	-.224	-.341	-.367	-.382		-.386	-.408	-.462				3
4	-.208	-.339	-.377	-.377		-.384	-.394	-.470				4
5	-.216	-.341	-.388	-.377		-.386	-.392	-.476				5
6	-.232	-.325	-.382	-.382		-.386	-.398	-.478				6
7	-.232	-.289	-.373	-.382		-.388	-.400	-.472				7
8	-.252	-.268	-.371	-.384		-.392	-.392	-.478				8
9	-.246	-.285	-.369	-.394		-.394	-.390	-.482				9
10	-.248	-.270		-.382		-.390	-.386	-.484				10
11	-.254	-.268		-.382		-.382						11
12	-.254	-.264		-.373		-.377	-.365	-.497				12
13	-.256	-.258	-.341	-.365		-.361	-.365	-.496				13
14	-.250	-.260	-.315	-.349		-.349	-.353	-.488				14
15	-.248	-.240	-.216	-.303		-.323	-.297	-.490				15
16	-.220	-.119	-.057	-.230		-.289	-.260	-.463				16
17		-.022	-.040	-.123		-.026	.087	-.521				17
18		-.404	-.394	-.434		-.456	-.454	-.507				18
19	-.379	-.438	-.430	-.464		-.460	-.454	-.515				19
20			-.424	-.452		-.430	-.424	-.490				20
21	-.406	-.414	-.414	-.420		-.418	-.412	-.471				21
22	-.382	-.254	-.309	-.359		-.369	-.363	-.092				22
					α= 12		δ= 30.0					
1	.852	.188	.139	-.268		.557	-.111	.676				1
2	-.157	-.357	-.369	-.402		-.412	-.434	-.480				2
3	-.226	-.349	-.375	-.388		-.392	-.418	-.482				3
4	-.210	-.345	-.379	-.386		-.394	-.402	-.486				4
5	-.220	-.341	-.386	-.386		-.390	-.398	-.499				5
6	-.230	-.321	-.382	-.388		-.394	-.400	-.499				6
7	-.234	-.289	-.377	-.386		-.392	-.402	-.491				7
8	-.248	-.264	-.377	-.390		-.398	-.394	-.489				8
9	-.248	-.281	-.371	-.398		-.398	-.396	-.495				9
10	-.254	-.268		-.386		-.394	-.388	-.499				10
11	-.258	-.266		-.382		-.384						11
12	-.254	-.266		-.371		-.371	-.369					12
13	-.254	-.256	-.349	-.365		-.357	-.359	-.507				13
14	-.252	-.256	-.321	-.343		-.345	-.325	-.490				14
15	-.250	-.200	-.135	-.268		-.291	-.232	-.500				15
16	-.220	-.083	-.010	-.141		-.236	-.182	-.482				16
17		-.075	-.091	-.220		-.095	.063	-.515				17
18		-.442	-.434	-.442		-.468	-.456	-.505				18
19	-.416	-.464	-.460	-.458		-.458	-.448	-.515				19
20			-.438	-.446		-.430	-.428	-.503				20
21	-.426	-.432	-.424	-.422		-.422	-.422	-.486				21
22	-.416	-.309	-.357	-.386		-.386	-.386	.004				22
					α= 12		δ= 39.5					
1		.186	.141	-.277		.567	-.226	.480				1
2		-.361	-.377	-.406		-.422	-.462	-.503				2
3		-.349	-.373	-.394		-.402	-.442	-.501				3
4		-.351	-.382	-.392		-.398	-.426	-.501				4
5		-.343	-.390	-.394		-.400	-.418	-.517				5
6		-.325	-.386	-.394		-.398	-.418	-.515				6
7		-.289	-.384	-.396		-.400	-.416	-.505				7
8		-.266	-.384	-.402		-.400	-.410	-.507				8
9	-.252	-.283	-.373	-.408		-.402	-.408	-.511				9
10	-.252	-.268		-.398		-.390	-.398	-.511				10
11	-.252	-.273		-.386		-.382						11
12	-.250	-.266		-.377		-.371	-.377	-.519				12
13	-.252	-.256	-.353	-.361		-.355	-.361	-.519				13
14	-.248	-.260	-.315	-.325		-.297	-.244	-.507				14
15	-.240	-.139	-.081	-.220		-.216	-.157	-.510				15
16	-.214	-.052	.016	-.095		-.155	-.115	-.498				16
17		-.216	-.198	-.331		-.283	-.180	-.523				17
18		-.480	-.466	-.456		-.466	-.462	-.525				18
19	-.434	-.493	-.474	-.466		-.456	-.450	-.519				19
20			-.462	-.454		-.436	-.438	-.511				20
21	-.460	-.454	-.452	-.440		-.438	-.434	-.509				21
22	-.456	-.373	-.412	-.422		-.414	-.416	.098				22

Table 7 Concluded

Pressure coefficients on swept wing

Configuration 1 M=1.61 R=1.7 x 10^6

Orif	Station 1	2	3	4	24	5	6	7	8	9	10	Orif
					α= 12		δ= 49.2					
1	.858	.192	.145	-.277		.468	-.287	.373				1
2	-.159	-.363	-.375	-.406		-.436	-.478	-.517				2
3	-.228	-.353	-.377	-.392		-.414	-.466	-.515				3
4	-.210	-.353	-.382	-.392		-.404	-.448	-.511				4
5	-.216	-.347	-.390	-.392		-.402	-.438	-.521				5
6	-.228	-.329	-.382	-.394		-.402	-.440	-.525				6
7	-.232	-.289	-.384	-.394		-.400	-.432	-.515				7
8	-.252	-.268	-.382	-.400		-.400	-.426	-.519				8
9	-.248	-.285	-.373	-.406		-.406	-.424	-.517				9
10	-.252	-.273		-.392		-.396	-.416	-.521				10
11	-.252	-.268		-.379		-.386						11
12	-.252	-.268		-.371		-.375	-.394	-.531				12
13	-.252	-.256	-.353	-.349		-.353	-.377	-.521				13
14	-.248	-.260	-.321	-.305		-.246	-.242	-.513				14
15	-.240	-.119	-.071	-.190		-.184	-.164	-.510				15
16	-.210	-.040	.028	-.075		-.135	-.123	-.498				16
17		-.264	-.242	-.367		-.341	-.264	-.521				17
18		-.491	-.474	-.458		-.474	-.468	-.525				18
19	-.442	-.505	-.478	-.468		-.462	-.458	-.521				19
20			-.468	-.458		-.450	-.452	-.513				20
21	-.480	-.470	-.464	-.450		-.450	-.446	-.494				21
22	-.470	-.379	-.436	-.434		-.428	-.428	.123				22
					α= 12		δ= 58.6					
1	.852	.194	.147	-.273		.317	-.365	.236				1
2	-.159	-.359	-.377	-.410		-.458	-.497	-.519				2
3	-.228	-.351	-.377	-.386		-.430	-.489	-.515				3
4	-.208	-.349	-.382	-.388		-.412	-.468	-.517				4
5	-.220	-.343	-.388	-.388		-.414	-.460	-.525				5
6	-.232	-.321	-.386	-.388		-.408	-.460	-.527				6
7	-.232	-.285	-.386	-.392		-.398	-.454	-.517				7
8	-.246	-.264	-.382	-.398		-.404	-.444	-.519				8
9	-.244	-.279	-.371	-.398		-.408	-.448	-.517				9
10	-.246	-.270		-.388		-.398	-.436	-.521				10
11	-.246	-.266		-.377		-.392						11
12	-.250	-.262		-.363		-.384	-.406	-.527				12
13	-.252	-.254	-.351	-.319		-.357	-.377	-.505				13
14	-.248	-.256	-.313	-.275		-.192	-.264	-.490				14
15	-.236	-.087	-.083	-.157		-.145	-.204	-.510				15
16	-.212	-.022	.038	-.040		-.109	-.161	-.484				16
17		-.321	-.305	-.406		-.398	-.353	-.515				17
18		-.505	-.493	-.458		-.470	-.466	-.503				18
19	-.452	-.515	-.493	-.462		-.464	-.458	-.505				19
20			-.484	-.460		-.450	-.458	-.492				20
21	-.501	-.489	-.474	-.454		-.454	-.450	-.471				21
22	-.489	-.386	-.458	-.438		-.438	-.438	.146				22
					α=		δ=					

Table 8

Pressure coefficients on swept wing

Configuration 1 M=1.61 R=3.6 x 10^6

Orif	Station 1	2	3	4	24	5	6	7	8	9	10	Orif
					α=-15		δ= 0.0					
1	.605	.668	.621	.646		-.179	.394	-.262				1
2	.451	.571	.632	.642		.680	.693	.434				2
3	.442	.497	.576	.575		.612	.662	.401				3
4	.431	.447	.527	.548		.569	.605	.307				4
5	.405	.437	.478	.515		.536	.581	.230				5
6	.379	.436	.456	.483		.509	.557	.198				6
7	.388	.407	.432	.459		.485	.551	.178				7
8	.410	.396	.397	.439		.473	.563	.161				8
9	.407	.378	.409	.435		.479	.557	.124				9
10	.388	.393		.433		.481	.538	.105				10
11	.396	.393		.440		.485						11
12	.397	.400		.444		.483	.507	.015				12
13	.391	.402	.411	.431		.464	.470	-.011				13
14	.391	.380	.376	.393		.437	.415	-.165				14
15	.404	.318	.311	.326		.323	.286	-.243				15
16	.562	.006	.086	-.048		.090	-.179	-.157				16
17		-.082	-.151	-.168		-.187	-.170	-.444				17
18		.222	.173	.109		.085	.147	-.113				18
19	.173	.151	.149	.137		.182	.112	-.165				19
20			.143	.170		.174	.129	-.160				20
21	.187	.172	.162	.186		.196	.144	-.145				21
22	.136	.186	.207	.227		.214	.133	-.125				22
					α=-15		δ= 0.0					
1	.575	.653	.608	.663		-.216	.350	-.315				1
2	.459	.584	.648	.659		.692	.714	.449				2
3	.454	.516	.593	.589		.631	.687	.417				3
4	.443	.468	.536	.560		.580	.634	.320				4
5	.418	.456	.491	.526		.549	.612	.239				5
6	.401	.451	.467	.493		.524	.587	.205				6
7	.414	.418	.443	.468		.507	.583	.181				7
8	.433	.404	.410	.457		.495	.583	.166				8
9	.421	.387	.420	.447		.503	.578	.129				9
10	.397	.399		.451		.500	.547	.107				10
11	.407	.405		.459		.512						11
12	.405	.409		.462		.501	.511	.016				12
13	.396	.409	.421	.446		.488	.468	-.143				13
14	.395	.386	.385	.399		.457	.413	-.174				14
15	.420	.325	.317	.333		.332	.284	-.247				15
16	.585	.004	.092	-.044		.095	-.201	-.142				16
17		-.085	-.151	-.175		-.204	-.181	-.406				17
18		.217	.197	.133		.118	.143	-.127				18
19	.163	.152	.153	.156		.189	.106	-.182				19
20			.152	.177		.175	.129	-.173				20
21	.184	.170	.182	.204		.202	.143	-.168				21
22	.158	.187	.226	.235		.218	.123	-.151				22
					α=-12		δ= -20.0					
1	.718	.683	.701	.624		.127	.596	.200				1
2	.424	.474	.506	.508		.539	.555	.358				2
3	.341	.392	.423	.425		.466	.492	.242				3
4	.334	.336	.386	.400		.430	.434	.160				4
5	.311	.313	.336	.369		.390	.407	.098				5
6	.286	.293	.317	.340		.353	.380	.071				6
7	.277	.275	.291	.303		.332	.346	.098				7
8	.271	.252	.246	.275		.304	.352	.156				8
9	.268	.237	.250	.274		.312	.349	.155				9
10	.250	.245		.293		.322	.374	.169				10
11	.255	.251		.302		.321						11
12	.262	.258		.309		.332	.614	.168				12
13	.252	.264	.294	.302		.453	.644	.196				13
14	.255	.259	.273	.343		.580	.660	-.127				14
15	.261	.221	.339	.536		.628	.670	.029				15
16	.420	.246	.461	.582		.638	.669	.344				16
17		.027	-.160	-.267		-.252	.295	-.484				17
18		.366	.454	.573		.653	.765	.234				18
19	.434	.707	.740	.736		.848	.855	.290				19
20			.767	.822		.878	.783	.269				20
21	.459	.622	.699	.771		.798	.684	.229				21
22	.453	.506	.548	.580		.567	.460	.114				22

Table 8 ' Continued

Pressure coefficients on swept wing

Configuration 1 M= 1.61 R= 3.6 x 10^6

Orif	Station 1	2	3	4	24	5	6	7	8	9	10	Orif
					α= -12		δ= -10.0					
1	.714	.684	.701	.631		.116	.592	.176				1
2	.422	.476	.508	.514		.548	.564	.362				2
3	.339	.392	.428	.434		.472	.502	.251				3
4	.334	.338	.389	.406		.436	.441	.167				4
5	.312	.315	.339	.373		.396	.416	.107				5
6	.284	.294	.322	.347		.360	.389	.079				6
7	.278	.277	.292	.310		.340	.354	.055				7
8	.272	.255	.251	.279		.311	.363	.048				8
9	.267	.236	.256	.279		.320	.358	.031				9
10	.250	.249		.298		.327	.354	.016				10
11	.254	.255		.307		.329						11
12	.261	.261		.316		.334	.356	-.045				12
13	.250	.267	.300	.307		.327	.338	-.062				13
14	.254	.263	.275	.288		.314	.316	-.179				14
15	.258	.218	.219	.231		.222	.216	-.235				15
16	.431	.016	.048	.037		.051	.010	-.032				16
17		.020	.018	.001		-.007	-.018	-.455				17
18		.287	.075	.044		.033	.216	.086				18
19	.233	.364	.407	.406		.424	.474	.092				19
20			.395	.443		.478	.463	.109				20
21	.315	.328	.379	.426		.471	.434	.111				21
22	.224	.299	.339	.374		.377	.332	.054				22
					α= -12		δ= - 5.0					
1	.714	.686	.701	.627		.111	.589	.164				1
2	.425	.476	.509	.515		.546	.566	.364				2
3	.340	.393	.430	.435		.473	.506	.254				3
4	.336	.336	.390	.405		.436	.445	.170				4
5	.314	.315	.341	.372		.397	.418	.108				5
6	.285	.293	.322	.345		.360	.392	.080				6
7	.280	.275	.292	.308		.338	.360	.057				7
8	.277	.252	.250	.279		.310	.365	.050				8
9	.270	.236	.254	.279		.319	.362	.033				9
10	.251	.250		.300		.329	.355	.017				10
11	.256	.256		.309		.332						11
12	.261	.260		.317		.336	.360	-.041				12
13	.253	.265	.299	.306		.328	.344	-.058				13
14	.253	.262	.276	.285		.314	.319	-.174				14
15	.257	.222	.221	.233		.224	.224	-.260				15
16	.422	-.036	.025	-.066		.022	-.114	-.144				16
17		-.061	-.090	-.108		-.123	-.121	-.438				17
18		.278	.106	.062		-.006	.193	-.047				18
19	.158	.225	.245	.222		.245	.211	-.103				19
20			.227	.240		.236	.207	-.097				20
21	.214	.200	.222	.233		.250	.198	-.094				21
22	.169	.195	.215	.235		.235	.155	-.088				22
					α= -12		δ= 0.0					
1	.715	.685	.697	.627		.109	.588	.155				1
2	.426	.475	.506	.514		.548	.567	.364				2
3	.338	.389	.426	.434		.477	.509	.257				3
4	.335	.339	.388	.405		.439	.450	.170				4
5	.311	.312	.341	.374		.401	.422	.112				5
6	.283	.295	.321	.344		.363	.395	.082				6
7	.278	.275	.293	.310		.343	.361	.061				7
8	.274	.254	.250	.279		.317	.367	.053				8
9	.269	.236	.253	.279		.324	.366	.036				9
10	.249	.247		.297		.333	.361	.020				10
11	.254	.254		.307		.336						11
12	.261	.260		.318		.342	.365	-.038				12
13	.254	.266	.300	.307		.335	.349	-.060				13
14	.254	.263	.274	.287		.321	.324	-.178				14
15	.256	.221	.218	.233		.229	.222	-.260				15
16	.418	-.047	.023	-.086		.022	-.148	-.160				16
17		-.084	-.125	-.150		-.161	-.147	-.421				17
18		.140	.117	.082		.055	.109	-.130				18
19	.091	.080	.066	.057		.079	.050	-.187				19
20			.066	.063		.064	.045	-.197				20
21	.101	.078	.071	.067		.074	.040	-.185				21
22	.105	.101	.086	.089		.082	.027	-.170				22

Table 8 - Continued

Pressure coefficients on swept wing

Configuration 1 M=1.61 R=3.6 x 10^6

Orif	Station 1	2	3	4	24	5	6	7	8	9	10	Orif
					α=-12		δ= 0.0					
1	.717	.674	.716	.623		.113	.584	.164				1
2	.427	.467	.502	.507		.546	.565	.361				2
3	.334	.388	.420	.430		.471	.503	.250				3
4	.333	.332	.381	.399		.434	.444	.166				4
5	.309	.306	.334	.368		.391	.411	.105				5
6	.280	.288	.315	.336		.358	.389	.073				6
7	.271	.268	.285	.304		.333	.351	.050				7
8	.265	.246	.244	.275		.307	.359	.044				8
9	.259	.228	.251	.273		.315	.360	.028				9
10	.244	.242		.293		.325	.352	.014				10
11	.253	.250		.302		.328						11
12	.254	.253		.309		.331	.358	-.043				12
13	.247	.259	.291	.301		.329	.339	-.149				13
14	.244	.255	.269	.280		.313	.315	-.193				14
15	.248	.209	.214	.227		.224	.215	-.268				15
16	.417	-.056	.019	-.089		.020	-.166	-.147				16
17		-.084	-.128	-.163		-.176	-.153	-.417				17
18		.069	.085	.070		.077	.061	-.173				18
19	.055	.023	.011	-.002		.025	-.010	-.231				19
20			.008	.004		.007	-.014	-.234				20
21	.054	.020	.014	.006		.013	-.022	-.238				21
22	-.015	.057	.037	.028		.027	-.028	-.218				22
					α=-12		δ= 5.0					
1	.719	.676	.718	.625		.114	.581	.154				1
2	.423	.469	.503	.512		.552	.561	.359				2
3	.330	.391	.422	.431		.477	.500	.250				3
4	.331	.332	.383	.402		.438	.442	.168				4
5	.309	.310	.332	.369		.393	.413	.104				5
6	.281	.290	.319	.340		.352	.386	.077				6
7	.273	.269	.288	.307		.339	.351	.055				7
8	.266	.251	.246	.276		.303	.358	.052				8
9	.262	.230	.251	.277		.313	.361	.034				9
10	.242	.247		.294		.322	.354	.023				10
11	.252	.254		.301		.327						11
12	.258	.259		.314		.330	.359	-.040				12
13	.249	.263	.296	.304		.324	.340	-.154				13
14	.249	.258	.275	.282		.311	.316	-.191				14
15	.252	.212	.219	.230		.223	.216	-.268				15
16	.417	-.052	.020	-.092		.017	-.183	-.147				16
17		-.075	-.122	-.156		-.185	-.152	-.415				17
18		-.009	-.008	.011		.023	-.015	-.217				18
19	-.019	-.055	-.061	-.067		-.054	-.078	-.270				19
20			-.062	-.067		-.069	-.084	-.281				20
21	-.017	-.047	-.068	-.067		-.065	-.088	-.274				21
22	-.059	.006	-.045	-.048		-.046	-.095	-.255				22
					α=-12		δ= 10.0					
1	.716	.671	.713	.621		.109	.583	.146				1
2	.425	.465	.500	.512		.548	.567	.359				2
3	.331	.385	.423	.430		.472	.506	.252				3
4	.330	.332	.382	.402		.430	.447	.171				4
5	.307	.305	.334	.366		.392	.418	.106				5
6	.279	.285	.314	.338		.356	.395	.077				6
7	.273	.269	.286	.303		.331	.357	.055				7
8	.266	.243	.244	.271		.308	.364	.049				8
9	.258	.228	.250	.275		.318	.364	.034				9
10	.247	.246		.293		.327	.357	.018				10
11	.253	.252		.305		.330						11
12	.252	.254		.312		.334	.361	-.044				12
13	.249	.258	.293	.300		.331	.344	-.169				13
14	.246	.253	.271	.281		.317	.319	-.188				14
15	.249	.214	.217	.227		.225	.219	-.259				15
16	.409	-.051	.018	-.100		.021	-.179	-.140				16
17		-.065	-.097	-.142		-.195	-.150	-.382				17
18		-.092	-.101	-.074		-.072	-.094	-.252				18
19	-.082	-.138	-.143	-.139		-.126	-.143	-.303				19
20			-.138	-.141		-.134	-.148	-.318				20
21	-.105	-.126	-.144	-.138		-.131	-.150	-.312				21
22	-.076	-.052	-.121	-.128		-.112	-.151	-.291				22

Table 8 · Continued

Pressure coefficients on swept wing

Configuration 1 M=1.61 R=3.6 x 10^6

Orif	Station 1	2	3	4	24	5	6	7	8	9	10	Orif
					α=-12		δ= 20.0					
1	.717	.672	.715	.626		.098	.578	.130				1
2	.425	.463	.502	.511		.553	.572	.362				2
3	.329	.385	.423	.434		.476	.508	.257				3
4	.328	.331	.382	.406		.439	.453	.177				4
5	.308	.307	.335	.373		.398	.421	.114				5
6	.278	.285	.314	.344		.361	.399	.084				6
7	.270	.265	.290	.306		.339	.363	.062				7
8	.265	.245	.245	.277		.312	.371	.058				8
9	.258	.230	.251	.279		.324	.373	.042				9
10	.247	.244		.299		.334	.364	.026				10
11	.251	.253		.307		.334						11
12	.254	.256		.316		.343	.366	-.038				12
13	.251	.261	.298	.305		.334	.354	-.163				13
14	.248	.255	.273	.286		.321	.322	-.188				14
15	.245	.213	.220	.228		.229	.219	-.259				15
16	.400	-.045	.020	-.100		.022	-.171	-.100				16
17		-.068	-.184	-.252		-.274	-.250	-.297				17
18		-.239	-.246	-.234		-.228	-.251	-.344				18
19	-.158	-.293	-.290	-.280		-.271	-.280	-.380				19
20			-.284	-.284		-.275	-.288	-.381				20
21	-.219	-.280	-.289	-.280		-.276	-.287	-.366				21
22	-.193	-.113	-.266	-.273		-.257	-.278	-.341				22
					α=-12		δ= 30.0					
1	.719	.674	.716	.625		.094	.577	.118				1
2	.425	.469	.502	.512		.558	.576	.366				2
3	.332	.389	.426	.434		.480	.517	.260				3
4	.331	.333	.385	.406		.441	.456	.180				4
5	.312	.309	.341	.372		.404	.425	.116				5
6	.279	.289	.318	.345		.361	.401	.087				6
7	.275	.271	.289	.308		.343	.369	.066				7
8	.267	.248	.249	.282		.316	.376	.061				8
9	.260	.233	.254	.284		.327	.377	.036				9
10	.249	.250		.306		.334	.369	.024				10
11	.252	.256		.310		.338						11
12	.253	.257		.320		.343	.374	-.031				12
13	.253	.264	.301	.310		.337	.358	-.141				13
14	.252	.258	.276	.292		.325	.329	-.162				14
15	.252	.216	.224	.234		.232	.225	-.230				15
16	.390	-.045	.024	-.079		.025	-.129	-.052				16
17		-.105	-.229	.079		.135	.016	-.223				17
18		-.335	-.348	-.336		-.343	-.348	-.389				18
19	-.251	-.374	-.380	-.369		-.368	-.368	-.386				19
20			-.377	-.373		-.368	-.373	-.396				20
21	-.282	-.370	-.381	-.369		-.370	-.370	-.379				21
22	-.305	-.201	-.287	-.307		-.304	-.316	-.364				22
					α=- 9		δ= 0.0					
1	.773	.693	.731	.644		.351	.678	.463				1
2	.471	.382	.426	.444		.460	.487	.314				2
3	.264	.296	.330	.337		.383	.405	.163				3
4	.255	.250	.297	.312		.349	.350	.093				4
5	.234	.229	.255	.289		.313	.322	.035				5
6	.208	.214	.238	.264		.283	.295	.005				6
7	.205	.201	.222	.233		.255	.249	-.017				7
8	.196	.176	.179	.199		.209	.239	-.029				8
9	.193	.162	.169	.181		.203	.234	-.039				9
10	.179	.169		.200		.212	.234	-.050				10
11	.182	.180		.207		.220						11
12	.188	.183		.214		.227	.246	-.080				12
13	.181	.189	.203	.210		.225	.239	-.100				13
14	.182	.179	.190	.197		.222	.228	-.172				14
15	.170	.137	.148	.156		.154	.160	-.262				15
16	.315	-.069	-.023	-.098		-.023	-.111	-.157				16
17		-.074	-.091	-.113		-.124	-.109	-.357				17
18		.059	.054	.024		.010	.051	-.136				18
19	.023	.010	.003	-.008		.016	-.010	-.206				19
20			-.007	-.009		-.007	-.018	-.213				20
21	.019	-.007	-.010	-.015		-.004	-.030	-.210				21
22	.041	.025	.014	.011		.005	-.044	-.194				22

Table 8 - Continued

Pressure coefficients on swept wing

Configuration 1 M=1.61 R=3.6 x 10^6

Orif	Station 1	2	3	4	24	5	6	7	8	9	10	Orif
					α=- 9		δ= 0.0					
1	.772	.667	.745	.639		.354	.674	.468				1
2	.449	.379	.417	.434		.453	.470	.307				2
3	.257	.293	.325	.330		.377	.395	.157				3
4	.251	.246	.291	.306		.341	.337	.086				4
5	.230	.222	.250	.283		.313	.316	.028				5
6	.206	.209	.233	.257		.280	.288	-.001				6
7	.201	.196	.218	.229		.252	.239	-.026				7
8	.188	.169	.171	.195		.199	.227	-.034				8
9	.186	.153	.160	.174		.195	.227	-.045				9
10	.175	.168		.192		.204	.226	-.057				10
11	.176	.176		.198		.210						11
12	.178	.179		.207		.217	.237	-.086				12
13	.174	.184	.196	.207		.218	.228	-.155				13
14	.174	.171	.180	.190		.211	.221	-.193				14
15	.165	.132	.138	.146		.144	.148	-.270				15
16	.315	-.078	-.034	-.102		-.033	-.122	-.146				16
17		-.076	-.097	-.123		-.139	-.121	-.359				17
18		.018	.035	.026		.025	.025	-.168				18
19	.006	-.026	-.033	-.041		-.022	-.054	-.236				19
20			-.045	-.047		-.044	-.056	-.252				20
21	-.011	-.040	-.048	-.050		-.043	-.066	-.244				21
22	-.026	-.005	-.020	-.030		-.032	-.078	-.222				22
					α=- 6		δ= -20.0					
1	.799	.705	.736	.697		.582	.683	.757				1
2	.217	.290	.311	.341		.317	.353	.200				2
3	.183	.184	.206	.213		.254	.254	.039				3
4	.172	.156	.192	.197		.226	.225	.010				4
5	.152	.135	.153	.174		.189	.205	-.013				5
6	.130	.124	.139	.155		.176	.182	-.032				6
7	.124	.118	.128	.135		.156	.151	-.044				7
8	.117	.094	.096	.109		.117	.129	-.063				8
9	.114	.078	.079	.086		.105	.121	-.074				9
10	.098	.085		.092		.103	.112	-.086				10
11	.102	.093		.098		.101						11
12	.108	.099		.107		.110	.256	.131				12
13	.103	.105	.110	.109		.203	.423	.119				13
14	.107	.097	.105	.181		.417	.469	-.185				14
15	.097	.069	.253	.406		.459	.485	.065				15
16	.210	.182	.350	.430		.464	.489	.286				16
17		.072	.059	.018		-.026	.139	-.254				17
18		.240	.338	.418		.459	.481	.160				18
19	.297	.624	.572	.525		.520	.545	.283				19
20			.698	.695		.643	.628	.312				20
21	.350	.532	.656	.716		.706	.636	.278				21
22	.364	.456	.507	.534		.510	.430	.146				22
					α=- 6		δ= -10.0					
1	.803	.705	.734	.699		.578	.684	.745				1
2	.219	.290	.314	.345		.325	.358	.211				2
3	.183	.185	.209	.215		.263	.263	.048				3
4	.174	.164	.193	.202		.231	.233	.012				4
5	.154	.138	.154	.178		.196	.213	-.010				5
6	.132	.128	.142	.161		.181	.190	-.031				6
7	.127	.121	.134	.139		.163	.161	-.047				7
8	.118	.100	.099	.116		.121	.139	-.062				8
9	.111	.082	.080	.092		.107	.128	-.074				9
10	.105	.090		.096		.107	.121	-.092				10
11	.103	.099		.101		.107						11
12	.107	.102		.111		.116	.126	-.091				12
13	.105	.108	.113	.114		.116	.122	-.119				13
14	.107	.102	.107	.107		.121	.119	-.081				14
15	.093	.065	.071	.079		.071	.079	-.221				15
16	.211	.041	.018	.053		.029	.041	-.037				16
17		.036	.040	.058		.042	.041	-.199				17
18		.124	.046	.046		.048	.108	.165				18
19	.110	.269	.288	.252		.249	.295	.043				19
20			.291	.312		.311	.309	.051				20
21	.172	.214	.275	.307		.333	.291	.021				21
22	.129	.194	.238	.265		.268	.193	-.023				22

Table 8 · Continued

Pressure coefficients on swept wing

Configuration 1 M= 1.61 R=3.6 x 10^6

Orif	Station 1	2	3	4	24	5	6	7	8	9	10	Orif
					α= - 6		δ= - 5.0					
1	.806	.708	.736	.701		.573	.685	.737				1
2	.217	.293	.315	.348		.330	.364	.214				2
3	.182	.188	.209	.216		.266	.265	.055				3
4	.171	.160	.194	.202		.234	.235	.016				4
5	.156	.140	.154	.179		.197	.214	-.011				5
6	.133	.128	.139	.160		.184	.194	-.033				6
7	.127	.121	.129	.138		.164	.162	-.048				7
8	.115	.100	.097	.116		.119	.142	-.061				8
9	.111	.082	.079	.093		.107	.131	-.072				9
10	.107	.090		.097		.110	.122	-.091				10
11	.106	.100		.104		.108						11
12	.107	.102		.114		.118	.127	-.089				12
13	.106	.111	.114	.116		.118	.124	-.120				13
14	.107	.102	.107	.107		.123	.121	-.090				14
15	.091	.063	.072	.079		.072	.079	-.249				15
16	.203	-.031	-.035	-.029		-.047	-.041	-.105				16
17		-.022	-.021	-.024		-.036	-.037	-.207				17
18		.083	.016	-.009		-.020	.043	.021				18
19	.038	.102	.098	.076		.087	.078	-.104				19
20			.088	.087		.082	.068	-.125				20
21	.075	.059	.089	.083		.095	.059	-.125				21
22	.028	.071	.085	.093		.083	.025	-.116				22
					α= - 6		δ= 0.0					
1	.806	.706	.736	.703		.570	.686	.729				1
2	.218	.295	.316	.350		.332	.367	.220				2
3	.181	.191	.213	.222		.270	.272	.057				3
4	.175	.164	.200	.206		.239	.238	.019				4
5	.158	.142	.158	.182		.203	.220	-.012				5
6	.134	.131	.145	.166		.187	.199	-.029				6
7	.126	.124	.136	.144		.168	.166	-.047				7
8	.118	.104	.103	.121		.122	.145	-.058				8
9	.112	.086	.085	.097		.113	.134	-.071				9
10	.108	.093		.101		.109	.126	-.090				10
11	.107	.104		.107		.110						11
12	.107	.106		.118		.119	.133	-.087				12
13	.107	.110	.117	.120		.121	.128	-.117				13
14	.109	.103	.111	.113		.125	.125	-.093				14
15	.095	.067	.075	.082		.076	.085	-.246				15
16	.197	-.071	-.062	-.088		-.071	-.087	-.123				16
17		-.064	-.073	-.084		-.098	-.085	-.208				17
18		-.022	-.009	-.022		-.025	-.021	-.119				18
19	-.036	-.071	-.071	-.081		-.068	-.089	-.217				19
20			-.080	-.082		-.084	-.095	-.217				20
21	-.060	-.077	-.090	-.090		-.085	-.104	-.207				21
22	-.026	-.039	-.067	-.069		-.069	-.114	-.187				22
					α= - 6		δ= 0.0					
1	.799	.660	.728	.698		.553	.688	.716				1
2	.215	.295	.317	.348		.331	.373	.218				2
3	.177	.184	.212	.218		.269	.276	.056				3
4	.171	.160	.196	.203		.237	.239	.022				4
5	.154	.138	.155	.177		.199	.224	-.014				5
6	.129	.127	.141	.161		.183	.201	-.033				6
7	.124	.119	.131	.140		.164	.168	-.051				7
8	.115	.097	.097	.114		.127	.146	-.062				8
9	.110	.080	.078	.091		.111	.136	-.076				9
10	.106	.089		.096		.113	.127	-.096				10
11	.101	.099		.102		.114						11
12	.102	.102		.115		.123	.132	-.089				12
13	.102	.108	.113	.118		.127	.131	-.080				13
14	.103	.100	.104	.105		.130	.129	-.115				14
15	.092	.063	.067	.075		.077	.082	-.251				15
16	.214	-.086	-.069	-.100		-.075	-.094	-.116				16
17		-.074	-.086	-.100		-.106	-.095	-.220				17
18		-.031	-.019	-.028		-.020	-.023	-.128				18
19	-.047	-.079	-.080	-.097		-.074	-.097					19
20			-.090	-.096		-.092	-.105	-.220				20
21	-.073	-.090	-.102	-.102		-.091	-.109	-.209				21
22	-.041	-.052	-.080	-.080		-.074	-.123	-.191				22

Table 8 - Continued

Pressure coefficients on swept wing

Configuration 1 M=1.61 R=3.6 x 10^6

Orif	Station 1	2	3	4	24	5	6	7	8	9	10	Orif
					α=- 6	δ= 5.0						
1	.798	.664	.731	.698		.556	.688	.710				1
2	.223	.295	.321	.353		.336	.375	.222				2
3	.180	.187	.215	.225		.276	.275	.063				3
4	.175	.163	.197	.208		.242	.244	.022				4
5	.157	.140	.158	.184		.209	.225	-.011				5
6	.135	.129	.145	.169		.190	.201	-.034				6
7	.126	.122	.134	.147		.164	.169	-.052				7
8	.115	.100	.101	.120		.124	.145	-.063				8
9	.110	.083	.085	.094		.111	.135	-.077				9
10	.105	.090		.101		.113	.126	-.092				10
11	.103	.102		.109		.115						11
12	.104	.105		.118		.124	.135	-.091				12
13	.101	.110	.116	.121		.127	.132	-.070				13
14	.105	.103	.111	.112		.128	.131	-.118				14
15	.094	.062	.076	.079		.077	.086	-.260				15
16	.210	-.083	-.066	-.110		-.078	-.105	-.119				16
17		-.065	-.074	-.093		-.107	-.090	-.230				17
18		-.092	-.085	-.077		-.072	-.083	-.180				18
19	-.082	-.144	-.137	-.141		-.131	-.143	-.257				19
20			-.144	-.143		-.143	-.153	-.249				20
21	-.119	-.141	-.158	-.153		-.143	-.157	-.225				21
22	-.070	-.082	-.138	-.136		-.129	-.164	-.204				22
					α=- 6	δ= 10.0						
1	.799	.663	.729	.701		.550	.691	.703				1
2	.220	.298	.321	.351		.341	.380	.227				2
3	.178	.186	.215	.224		.274	.281	.069				3
4	.174	.165	.197	.208		.245	.247	.026				4
5	.156	.141	.157	.183		.207	.225	-.013				5
6	.133	.129	.146	.173		.190	.209	-.030				6
7	.125	.122	.134	.146		.169	.168	-.050				7
8	.116	.101	.099	.119		.130	.151	-.063				8
9	.107	.082	.083	.096		.115	.140	-.075				9
10	.110	.091		.102		.116	.131	-.091				10
11	.104	.103		.110		.119						11
12	.108	.105		.120		.125	.142	-.089				12
13	.103	.110	.116	.120		.132	.134	-.070				13
14	.105	.104	.110	.115		.131	.134	-.120				14
15	.093	.067	.075	.081		.084	.086	-.263				15
16	.206	-.061	-.070	-.155		-.077	-.098	-.113				16
17		-.030	-.048	-.073		-.132	-.069	-.232				17
18		-.176	-.184	-.166		-.161	-.174	-.252				18
19	-.124	-.231	-.228	-.225		-.216	-.220	-.292				19
20			-.228	-.225		-.223	-.229	-.262				20
21	-.169	-.225	-.239	-.229		-.225	-.232	-.232				21
22	-.150	-.094	-.219	-.217		-.206	-.232	-.209				22
					α=- 6	δ= 20.0						
1	.802	.666	.735	.700		.545	.692	.693				1
2	.221	.298	.322	.357		.346	.387	.233				2
3	.172	.188	.215	.228		.281	.288	.071				3
4	.176	.162	.197	.214		.250	.254	.027				4
5	.157	.139	.160	.187		.211	.235	-.012				5
6	.131	.130	.147	.171		.194	.211	-.029				6
7	.130	.121	.137	.151		.175	.175	-.051				7
8	.119	.100	.104	.124		.130	.157	-.064				8
9	.114	.084	.085	.100		.119	.145	-.075				9
10	.113	.092		.106		.119	.135	-.090				10
11	.104	.103		.113		.122						11
12	.107	.105		.122		.130	.146	-.090				12
13	.114	.110	.120	.126		.133	.141	-.064				13
14	.110	.105	.116	.116		.136	.140	-.119				14
15	.096	.064	.079	.085		.086	.092	-.243				15
16	.190	-.018	-.062	-.048		-.072	-.035	-.080				16
17		.020	-.091	-.137		-.212	-.145	-.216				17
18		-.289	-.300	-.290		-.293	-.300	-.328				18
19	-.220	-.338	-.335	-.334		-.329	-.327	-.309				19
20			-.335	-.336		-.331	-.335	-.309				20
21	-.275	-.332	-.340	-.334		-.333	-.334	-.283				21
22	-.282	-.163	-.266	-.300		-.299	-.317	-.275				22

Table 8 - Continued

Pressure coefficients on swept wing

Configuration 1 M=1.61 R=3.6 x 10^6

Orif	Station 1	2	3	4	24	5	6	7	8	9	10	Orif
					α= - 6		δ= 30.0					
1	.798	.661	.731	.698		.536	.692	.683				1
2	.222	.295	.322	.355		.350	.391	.239				2
3	.178	.185	.218	.228		.285	.296	.083				3
4	.174	.166	.200	.215		.252	.257	.035				4
5	.155	.143	.163	.188		.218	.242	-.009				5
6	.131	.130	.148	.172		.199	.217	-.027				6
7	.128	.124	.137	.153		.175	.183	-.052				7
8	.116	.102	.103	.124		.139	.161	-.052				8
9	.113	.083	.087	.100		.123	.153	-.041				9
10	.108	.094		.110		.125	.143	-.045				10
11	.102	.103		.119		.127						11
12	.107	.107		.129		.136	.151	-.022				12
13	.117	.113	.124	.128		.140	.149	.062				13
14	.110	.106	.115	.117		.142	.149	.050				14
15	.098	.069	.079	.088		.089	.103	-.001				15
16	.171	.085	-.018	.019		-.039	.041	.108				16
17		.102	-.001	.461		.540	.315	.025				17
18		-.384	-.401	-.389		-.397	-.392	-.371				18
19	-.320	-.422	-.425	-.418		-.419	-.412	-.372				19
20			-.423	-.420		-.416	-.408	-.343				20
21	-.347	-.416	-.424	-.417		-.412	-.384	-.356				21
22	-.379	-.272	-.310	-.310		-.312	-.330	-.341				22
					α= - 3		δ= 0.0					
1	.823	.705	.731	.671		.674	.665	.835				1
2	.151	.182	.219	.241		.219	.250	.130				2
3	.114	.091	.084	.104		.147	.140	-.069				3
4	.106	.077	.103	.114		.133	.129	-.024				4
5	.089	.065	.073	.086		.100	.111	-.022				5
6	.065	.055	.062	.073		.087	.096	-.037				6
7	.060	.050	.052	.054		.073	.073	-.046				7
8	.053	.035	.024	.032		.041	.047	-.066				8
9	.047	.017	.008	.017		.028	.040	-.062				9
10	.044	.022		.017		.027	.027	-.093				10
11	.041	.032		.020		.026						11
12	.042	.036		.028		.033	.036	-.095				12
13	.046	.043	.039	.036		.027	.038	-.098				13
14	.045	.036	.038	.033		.039	.036	.021				14
15	.029	.007	.011	.007		-.002	.003	-.148				15
16	.108	-.069	-.087	-.090		-.105	-.082	-.004				16
17		-.054	-.066	-.076		-.076	-.072	-.095				17
18		-.070	-.054	-.083		-.083	-.100	-.101				18
19	-.079	-.118	-.119	-.147		-.132	-.166	-.195				19
20			-.126	-.143		-.146	-.164	-.172				20
21	-.107	-.131	-.133	-.141		-.139	-.167	-.185				21
22	-.061	-.065	-.108	-.115		-.131	-.172	-.181				22
					α= - 3		δ= 0.0					
1	.816	.667	.736	.675		.673	.662	.832				1
2	.146	.172	.210	.236		.220	.244	.124				2
3	.106	.088	.074	.102		.139	.128	-.078				3
4	.100	.075	.097	.115		.130	.124	-.021				4
5	.089	.061	.071	.080		.099	.106	-.024				5
6	.061	.049	.056	.069		.084	.089	-.041				6
7	.056	.048	.048	.050		.071	.067	-.047				7
8	.048	.030	.024	.028		.034	.044	-.064				8
9	.043	.011	.007	.014		.021	.036	-.060				9
10	.038	.019		.014		.022	.023	-.089				10
11	.035	.030		.017		.022						11
12	.038	.032		.025		.030	.028	-.095				12
13	.045	.039	.038	.030		.024	.033	.062				13
14	.040	.032	.034	.028		.033	.031	-.003				14
15	.024	.000	.007	.002		-.007	-.006	-.154				15
16	.090	-.079	-.089	-.092		-.113	-.092	-.006				16
17		-.058	-.072	-.077		-.085	-.077	-.111				17
18		-.081	-.063	-.086		-.089	-.107	-.146				18
19	-.088	-.129	-.134	-.156		-.145	-.175	-.195				19
20			-.138	-.152		-.158	-.176	-.186				20
21	-.118	-.140	-.145	-.152		-.154	-.178	-.197				21
22	-.070	-.076	-.122	-.124		-.142	-.181	-.197				22

Table 8 - Continued

Pressure coefficients on swept wing

Configuration 1 M= 1.61 R= 3.6 x 10^6

Orif	Station 1	2	3	4	24	5	6	7	8	9	10	Orif
					α= 0		δ= -30.0					
1	.847	.750	.719	.569		.724	.592	.827				1
2	.104	.082	.106	.131		.120	.139	.091				2
3	.050	.021	.035	.059		.061	.064	-.039				3
4	.052	.008	.015	.011		.027	.015	-.019				4
5	.033	-.001	-.009	-.005		.000	.007	-.016				5
6	.015	-.005	-.014	-.016		-.011	-.007	-.025				6
7	.010	-.005	-.020	-.025		-.020	-.026	-.010				7
8	.008	-.020	-.038	-.040		-.044	-.039	.118				8
9	-.003	-.035	-.048	-.057		-.058	.059	.158				9
10	-.010	-.031		-.049		-.054	.236	.163				10
11	-.007	-.020		-.048		.161						11
12	-.005	-.015		-.038		.259	.290	.153				12
13	-.015	-.010	-.027	.243		.284	.296	.117				13
14	-.007	-.015	.203	.301		.296	.296	.037				14
15	-.010	.060	.295	.324		.309	.287	.087				15
16	.107	.205	.304	.300		.281	.285	.235				16
17		.168	.235	.255		.256	.236	.037				17
18		.216	.306	.337		.319	.291	.094				18
19	.307	.642	.415	.333		.311	.289	.114				19
20			.704	.480		.379	.307	.129				20
21	.338	.586	.765	.685		.477	.336	.129				21
22	.377	.481	.559	.598		.430	.256	.071				22
					α= 0		δ= -20.0					
1	.848	.750	.721	.573		.727	.600	.841				1
2	.106	.082	.111	.134		.124	.148	.098				2
3	.050	.022	.037	.060		.063	.065	-.038				3
4	.053	.010	.017	.016		.029	.016	-.014				4
5	.034	.002	-.007	-.004		.003	.008	-.013				5
6	.015	-.003	-.010	-.013		-.008	-.005	-.022				6
7	.012	-.003	-.017	-.025		-.016	-.023	-.012				7
8	.010	-.021	-.036	-.040		-.038	-.036	-.030				8
9	-.001	-.036	-.046	-.051		-.054	-.041	-.025				9
10	-.007	-.030		-.048		-.050	-.051	-.042				10
11	-.006	-.021		-.046		-.048						11
12	-.004	-.016		-.038		-.041	-.048	-.086				12
13	-.015	-.009	-.025	-.036		-.042	-.050	-.072				13
14	-.006	-.012	-.021	-.035		-.029	.051	.087				14
15	-.012	-.036	.046	.150		.205	.217	.166				15
16	.093	.079	.179	.219		.229	.225	.267				16
17		.085	.182	.203		.225	.222	.009				17
18		.112	.175	.213		.235	.225	.183				18
19	.093	.333	.278	.255		.246	.252	.138				19
20			.354	.330		.293	.299	.124				20
21	.161	.292	.364	.369		.330	.317	.112				21
22	.165	.252	.304	.304		.262	.222	.050				22
					α= 0		δ= -10.0					
1	.848	.750	.722	.580		.722	.605	.850				1
2	.106	.085	.113	.138		.132	.158	.100				2
3	.051	.023	.037	.062		.067	.071	-.040				3
4	.052	.012	.019	.020		.035	.024	-.011				4
5	.036	.003	-.006	-.001		.007	.018	-.006				5
6	.016	-.002	-.007	-.010		-.003	.003	-.018				6
7	.012	-.004	-.017	-.020		-.013	-.020	-.007				7
8	.010	-.021	-.036	-.038		-.035	-.030	-.029				8
9	-.002	-.035	-.045	-.050		-.050	-.036	-.021				9
10	-.004	-.029		-.046		-.046	-.046	-.046				10
11	-.008	-.020		-.043		-.043						11
12	-.004	-.012		-.036		-.036	-.042	-.061				12
13	-.010	-.007	-.022	-.035		-.037	-.042	-.057				13
14	-.005	-.010	-.020	-.033		-.033	-.044	.047				14
15	-.020	-.040	-.043	-.047		-.063	-.051	-.061				15
16	.065	-.010	-.031	-.015		-.022	.001	.088				16
17		.005	.001	-.012		-.010	.002	-.068				17
18		.030	.007	.002		.006	-.007	.055				18
19	-.018	.056	.056	.031		.021	.007	-.017				19
20			.056	.042		.021	.008	-.023				20
21	.000	.028	.054	.046		.033	.011	-.040				21
22	-.021	.030	.046	.048		.014	-.011	-.067				22

Table 8 · Continued

Pressure coefficients on swept wing

Configuration 1 M=1.61 R=3.6 x 10^6

Orif	Station 1	2	3	4	24	5	6	7	8	9	10	Orif
					α= 0		δ= - 5.0					
1	1.807	1.589	1.522	1.223		1.526	1.276	1.807				1
2	.194	.155	.222	.275		.252	.317	.186				2
3	.085	.028	.052	.101		.117	.123	-.127				3
4	.083	-.002	.010	.008		.044	.028	-.059				4
5	.046	-.018	-.038	-.036		-.016	.010	-.046				5
6	.006	-.036	-.046	-.061		-.038	-.028	-.071				6
7	-.004	-.034	-.065	-.077		-.059	-.061	-.052				7
8	-.008	-.073	-.105	-.107		-.107	-.089	-.095				8
9	-.032	-.099	-.125	-.143		-.137	-.103	-.079				9
10	-.036	-.091		-.129		-.131	-.123	-.135				10
11	-.048	-.073		-.127		-.125						11
12	-.042	-.057		-.107		-.111	-.121	-.151				12
13	-.044	-.042	-.073	-.101		-.111	-.119	-.052				13
14	-.036	-.052	-.071	-.097		-.101	-.119	.059				14
15	-.069	-.119	-.119	-.137		-.168	-.159	-.073				15
16	.067	-.159	-.204	-.186		-.212	-.168	.037				16
17		-.125	-.141	-.157		-.168	-.157	-.060				17
18		-.091	-.113	-.159		-.200	-.204	-.049				18
19	-.170	-.157	-.155	-.210		-.212	-.270	-.086				19
20			-.178	-.204		-.244	-.275	-.097				20
21	-.200	-.190	-.182	-.212		-.232	-.275	-.106				21
22	-.192	-.135	-.159	-.164		-.212	-.283	-.106				22
					α= 0		δ= 0.0					
1	.844	.738	.721	.571		.722	.600	.839				1
2	.105	.080	.113	.140		.136	.160	.097				2
3	.048	.021	.034	.060		.070	.067	-.051				3
4	.052	.009	.016	.016		.037	.024	-.016				4
5	.035	-.002	-.007	-.002		.008	.018	-.012				5
6	.015	-.005	-.009	-.012		-.002	.005	-.022				6
7	.008	-.006	-.020	-.021		-.010	-.015	-.014				7
8	.007	-.022	-.037	-.036		-.034	-.029	-.033				8
9	-.006	-.038	-.047	-.050		-.050	-.034	-.025				9
10	-.008	-.033		-.046		-.047	-.045	-.054				10
11	-.007	-.023		-.044		-.043						11
12	-.009	-.018		-.036		-.037	-.039	-.052				12
13	-.017	-.013	-.022	-.034		-.034	-.041	.064				13
14	-.010	-.013	-.020	-.033		-.034	-.041	.032				14
15	-.025	-.046	-.043	-.048		-.065	-.061	-.084				15
16	-.005	-.074	-.089	-.083		-.101	-.078	.028				16
17		-.061	-.067	-.070		-.076	-.075	-.074				17
18		-.097	-.089	-.095		-.112	-.129	-.105				18
19	-.099	-.148	-.145	-.160		-.160	-.181	-.154				19
20			-.155	-.160		-.176	-.190	-.185				20
21	-.132	-.147	-.162	-.166		-.171	-.189	-.173				21
22	-.087	-.090	-.146	-.144		-.155	-.186	-.162				22
					α= 0		δ= 5.0					
1	.846	.730	.719	.575		.718	.603	.842				1
2	.102	.078	.113	.143		.137	.162	.098				2
3	.048	.020	.035	.058		.073	.067	-.051				3
4	.050	.010	.015	.014		.035	.028	-.012				4
5	.034	-.002	-.006	-.004		.008	.021	-.009				5
6	.014	-.006	-.011	-.013		-.004	.005	-.021				6
7	.006	-.007	-.019	-.023		-.006	-.012	-.011				7
8	.004	-.022	-.037	-.037		-.035	-.027	-.030				8
9	-.005	-.039	-.045	-.050		-.049	-.032	-.023				9
10	-.007	-.034		-.046		-.045	-.043	-.048				10
11	-.014	-.024		-.043		-.042						11
12	-.012	-.019		-.036		-.037	-.038	-.049				12
13	-.009	-.015	-.020	-.034		-.037	-.038	.051				13
14	-.010	-.014	-.020	-.032		-.033	-.038	.031				14
15	-.022	-.047	-.045	-.048		-.064	-.059	-.075				15
16	-.030	-.052	-.087	-.119		-.110	-.057	.044				16
17		-.043	-.047	-.053		-.053	-.048	-.053				17
18		-.163	-.158	-.160		-.169	-.185	-.163				18
19	-.130	-.216	-.211	-.220		-.220	-.234	-.214				19
20			-.215	-.220		-.230	-.241	-.254				20
21	-.200	-.207	-.223	-.225		-.228	-.238	-.244				21
22	-.140	-.082	-.198	-.211		-.211	-.228	-.227				22

Table 8 · Continued

Pressure coefficients on swept wing

Configuration 1 M= 1.61 R= 3.6 x 10^6

Orif	Station 1	2	3	4	24	5	6	7	8	9	10	Orif
					α= 0		δ= 10.0					
1	.846	.735	.721	.578		.718	.607	.841				1
2	.102	.080	.114	.148		.142	.168	.100				2
3	.048	.017	.035	.060		.074	.072	-.050				3
4	.051	.009	.017	.020		.041	.030	-.010				4
5	.032	-.004	-.004	.005		.016	.025	-.009				5
6	.014	-.005	-.010	-.008		.002	.011	-.020				6
7	.007	-.005	-.017	-.019		-.006	-.012	-.012				7
8	.005	-.022	-.034	-.034		-.030	-.023	-.031				8
9	-.005	-.037	-.045	-.047		-.045	-.029	-.022				9
10	-.007	-.034		-.039		-.041	-.040	-.048				10
11	-.012	-.021		-.041		-.038						11
12	-.011	-.017		-.032		-.032	-.036	-.058				12
13	-.007	-.015	-.021	-.031		-.031	-.035	.041				13
14	-.007	-.013	-.019	-.030		-.028	-.035	.017				14
15	-.020	-.044	-.041	-.045		-.061	-.051	-.064				15
16	-.052	-.007	-.055	-.108		-.124	-.023	.075				16
17		.004	-.013	-.034		-.023	.012	-.013				17
18		-.239	-.242	-.239		-.240	-.260	-.218				18
19	-.164	-.293	-.290	-.293		-.294	-.302	-.311				19
20			-.293	-.293		-.301	-.310	-.344				20
21	-.239	-.287	-.298	-.298		-.301	-.309	-.340				21
22	-.248	-.109	-.225	-.270		-.272	-.280	-.344				22
					α= 0		δ= 20.0					
1	.846	.731	.717	.587		.716	.615	.848				1
2	.102	.083	.117	.153		.145	.177	.104				2
3	.048	.018	.035	.062		.075	.075	-.053				3
4	.049	.009	.015	.021		.042	.041	-.004				4
5	.034	-.002	-.002	.005		.015	.033	-.002				5
6	.013	-.004	-.006	-.004		.006	.017	-.013				6
7	.007	-.004	-.015	-.014		.001	-.003	-.007				7
8	.002	-.023	-.034	-.033		-.027	-.016	-.025				8
9	-.009	-.036	-.045	-.045		-.039	-.020	-.019				9
10	-.007	-.031		-.040		-.038	-.034	-.045				10
11	-.012	-.021		-.038		-.034						11
12	-.009	-.017		-.030		-.028	-.026	-.061				12
13	-.006	-.009	-.019	-.028		-.028	-.027	.014				13
14	-.005	-.014	-.017	-.026		-.020	-.026	.017				14
15	-.018	-.043	-.007	.117		.125	.154	.021				15
16	-.006	.067	.136	.206		.183	.202	.152				16
17		.084	.153	.196		.173	.214	.012				17
18		-.334	-.342	-.334		-.341	-.346	-.304				18
19	-.288	-.382	-.383	-.380		-.379	-.377	-.400				19
20			-.384	-.384		-.385	-.384	-.413				20
21	-.319	-.381	-.388	-.385		-.384	-.383	-.420				21
22	-.351	-.224	-.246	-.261		-.274	-.275	-.431				22
					α= 0		δ= 30.0					
1	.844	.730	.718	.590		.714	.620	.846				1
2	.104	.085	.118	.155		.151	.181	.104				2
3	.050	.021	.038	.061		.078	.078	-.056				3
4	.052	.013	.018	.025		.047	.045	-.002				4
5	.036	.000	-.002	.005		.016	.034	-.002				5
6	.014	-.004	-.007	-.006		.009	.018	-.013				6
7	.008	-.003	-.015	-.012		.001	.001	-.011				7
8	.002	-.021	-.034	-.030		-.023	-.012	-.030				8
9	-.007	-.037	-.042	-.043		-.039	-.019	-.007				9
10	-.006	-.028		-.037		-.035	-.030	.025				10
11	-.010	-.019		-.035		-.030						11
12	-.009	-.013		-.027		-.027	-.023	-.010				12
13	-.005	-.007	-.018	-.024		-.018	.022	.136				13
14	-.005	-.012	-.004	.149		.225	.211	.125				14
15	-.015	.024	.235	.278		.279	.259	.084				15
16	.008	.192	.272	.293		.290	.259	.176				16
17		.175	.251	.275		.268	.238	.111				17
18		-.413	-.419	-.416		-.417	-.385	-.368				18
19	-.357	-.448	-.437	-.427		-.414	-.372	-.422				19
20			-.413	-.407		-.388	-.348	-.426				20
21	-.374	-.431	-.387	-.383		-.361	-.337	-.423				21
22	-.414	-.302	-.347	-.338		-.324	-.307	-.383				22

Table 8 ' Continued

Pressure coefficients on swept' wing

Configuration 1 M=1.61 R=3.6 x 10^6

Orif	Station 1	2	3	4	24	5	6	7	8	9	10	Orif
					α= 3		δ= 0.0					
1	.876	.730	.710	.378		.747	.454	.829				1
2	.050	-.042	-.054	-.062		-.067	-.059	-.028				2
3	-.026	-.044	-.057	-.046		-.058	-.045	-.034				3
4	-.005	-.057	-.071	-.080		-.075	-.078	-.078				4
5	-.020	-.065	-.074	-.089		-.081	-.087	-.062				5
6	-.037	-.062	-.088	-.097		-.091	-.096	-.079				6
7	-.040	-.061	-.091	-.101		-.106	-.113	-.079				7
8	-.044	-.076	-.102	-.112		-.121	-.119	-.094				8
9	-.056	-.089	-.107	-.125		-.129	-.120	-.093				9
10	-.056	-.080		-.121		-.130	-.128	-.106				10
11	-.062	-.076		-.118		-.123						11
12	-.060	-.068		-.107		-.117	-.125	-.155				12
13	-.058	-.062	-.081	-.101		-.121	-.128	-.147				13
14	-.053	-.064	-.079	-.098		-.110	-.129	-.069				14
15	-.064	-.093	-.099	-.113		-.138	-.133	-.146				15
16	-.071	-.068	-.084	-.085		-.100	-.078	-.020				16
17		-.050	-.059	-.064		-.070	-.067	-.091				17
18		-.146	-.139	-.157		-.182	-.203	-.177				18
19	-.133	-.193	-.193	-.209		-.224	-.245	-.211				19
20			-.198	-.214		-.232	-.246	-.233				20
21	-.184	-.190	-.207	-.217		-.232	-.238	-.253				21
22	-.116	-.068	-.166	-.193		-.200	-.215	-.268				22
					α= 3		δ= 0.0					
1	.872	.714	.712	.391		.738	.465	.831				1
2	.054	-.037	-.046	-.051		-.059	-.049	-.022				2
3	-.023	-.047	-.050	-.041		-.050	-.034	-.031				3
4	-.007	-.058	-.069	-.075		-.069	-.065	-.072				4
5	-.019	-.066	-.076	-.083		-.075	-.082	-.061				5
6	-.035	-.063	-.088	-.093		-.089	-.093	-.073				6
7	-.041	-.063	-.091	-.098		-.099	-.104	-.067				7
8	-.048	-.076	-.102	-.113		-.115	-.111	-.085				8
9	-.056	-.090	-.108	-.126		-.125	-.114	-.083				9
10	-.058	-.083		-.120		-.121	-.121	-.102				10
11	-.059	-.075		-.116		-.115						11
12	-.061	-.070		-.104		-.114	-.117	-.147				12
13	-.062	-.063	-.079	-.104		-.116	-.119	-.014				13
14	-.058	-.066	-.076	-.098		-.107	-.125	-.036				14
15	-.071	-.093	-.096	-.111		-.135	-.125	-.146				15
16	-.090	-.075	-.088	-.090		-.101	-.079	-.006				16
17		-.058	-.066	-.076		-.073	-.073	-.099				17
18		-.137	-.129	-.146		-.167	-.190	-.185				18
19	-.132	-.182	-.186	-.201		-.214	-.239	-.197				19
20			-.189	-.205		-.223	-.235	-.222				20
21	-.177	-.184	-.201	-.209		-.223	-.229	-.236				21
22	-.116	-.076	-.168	-.185		-.195	-.211	-.250				22
					α= 6		δ= -30.0					
1	.884	.670	.612	.155		.762	.265	.936				1
2	-.002	-.149	-.170	-.183		-.199	-.202	-.163				2
3	-.093	-.147	-.161	-.164		-.185	-.184	-.167				3
4	-.059	-.124	-.179	-.183		-.193	-.201	-.198				4
5	-.069	-.130	-.186	-.188		-.196	-.198	-.193				5
6	-.086	-.125	-.185	-.195		-.193	-.202	-.193				6
7	-.090	-.120	-.164	-.202		-.203	-.209	-.170				7
8	-.099	-.133	-.171	-.213		-.212	-.101	-.178				8
9	-.103	-.141	-.177	-.224		-.221	-.004	-.187				9
10	-.107	-.135		-.217		-.015	.018	-.131				10
11	-.109	-.129		-.209		.034						11
12	-.110	-.121		.035		.056	.053	-.050				12
13	-.110	-.115	-.144	.093		.060	.052	-.065				13
14	-.103	-.117	.128	.107		.062	.050	-.010				14
15	-.110	.084	.166	.129		.074	.061	.007				15
16	-.073	.136	.162	.097		.064	.050	.111				16
17		.131	.007	.043		.303	.178	.003				17
18		.130	.202	.162		.081	.060	-.019				18
19	.174	.366	.193	.127		.091	.097	-.091				19
20			.355	.178		.082	.105	-.074				20
21	.217	.468	.523	.265		.097	.100	-.071				21
22	.255	.387	.472	.290		.035	.015	-.075				22

Table 8 - Continued

Pressure coefficients on swept wing

Configuration 1 M=1.61 R=3.6 x 10^6

Orif	Station 1	2	3	4	24	5	6	7	8	9	10	Orif
					α= 6		δ= -20.0					
1	.884	.669	.610	.160		.760	.271	.923				1
2	-.004	-.150	-.167	-.181		-.194	-.195	-.151				2
3	-.093	-.145	-.159	-.163		-.181	-.177	-.152				3
4	-.058	-.124	-.176	-.181		-.190	-.196	-.192				4
5	-.068	-.131	-.181	-.186		-.193	-.194	-.190				5
6	-.088	-.124	-.182	-.193		-.192	-.197	-.182				6
7	-.092	-.120	-.164	-.199		-.200	-.207	-.214				7
8	-.098	-.130	-.168	-.208		-.211	-.214	-.264				8
9	-.106	-.140	-.175	-.223		-.222	-.218	-.316				9
10	-.106	-.132		-.213		-.219	-.223	-.344				10
11	-.109	-.127		-.205		-.215						11
12	-.111	-.121		-.182		-.212	-.216	-.334				12
13	-.109	-.115	-.141	-.174		-.215	-.214	-.335				13
14	-.104	-.115	-.138	-.157		-.111	-.101	-.252				14
15	-.113	-.106	-.016	.032		.006	.005	-.274				15
16	-.095	.037	.065	.066		.028	.015	-.077				16
17		.033	-.017	-.129		-.146	-.056	-.219				17
18		.043	.072	.058		.024	.021	-.157				18
19	-.016	.121	.103	.064		.036	.026	-.283				19
20			.139	.084		.033	.032	-.207				20
21	.030	.122	.158	.101		.036	.034	-.202				21
22	.038	.099	.126	.061		-.021	-.021	-.227				22
					α= 6		δ= -10.0					
1	.883	.669	.615	.165		.758	.278	.903				1
2	-.005	-.151	-.168	-.180		-.190	-.191	-.142				2
3	-.094	-.146	-.160	-.160		-.177	-.173	-.140				3
4	-.059	-.122	-.175	-.179		-.184	-.192	-.186				4
5	-.070	-.130	-.182	-.184		-.188	-.190	-.188				5
6	-.088	-.122	-.180	-.193		-.189	-.193	-.176				6
7	-.091	-.119	-.161	-.199		-.196	-.203	-.197				7
8	-.097	-.130	-.167	-.208		-.207	-.212	-.243				8
9	-.107	-.141	-.173	-.220		-.218	-.215	-.291				9
10	-.107	-.132		-.212		-.215	-.219	-.329				10
11	-.109	-.128		-.203		-.213						11
12	-.109	-.121		-.181		-.211	-.212	-.320				12
13	-.110	-.114	-.140	-.171		-.213	-.211	-.324				13
14	-.102	-.115	-.136	-.168		-.206	-.215	-.248				14
15	-.115	-.136	-.150	-.176		-.221	-.193	-.300				15
16	-.119	-.075	-.087	-.091		-.126	-.101	-.119				16
17		-.042	-.052	-.068		-.096	-.089	-.251				17
18		-.061	-.069	-.098		-.144	-.159	-.262				18
19	-.096	-.066	-.073	-.109		-.156	-.181	-.320				19
20			-.079	-.103		-.159	-.171	-.265				20
21	-.112	-.085	-.079	-.102		-.146	-.159	-.265				21
22	-.091	-.057	-.064	-.079		-.115	-.148	-.264				22
					α= 6		δ= - 5.0					
1	.883	.675	.616	.173		.760	.281	.893				1
2	-.001	-.148	-.165	-.177		-.189	-.187	-.133				2
3	-.093	-.143	-.155	-.158		-.175	-.168	-.132				3
4	-.057	-.122	-.174	-.180		-.183	-.190	-.179				4
5	-.068	-.128	-.180	-.181		-.185	-.189	-.188				5
6	-.087	-.121	-.180	-.190		-.188	-.192	-.172				6
7	-.088	-.117	-.160	-.197		-.194	-.203	-.187				7
8	-.098	-.127	-.165	-.207		-.207	-.210	-.226				8
9	-.104	-.139	-.171	-.219		-.217	-.212	-.274				9
10	-.105	-.130		-.212		-.214	-.220	-.314				10
11	-.107	-.125		-.203		-.212						11
12	-.108	-.117		-.182		-.209	-.210	-.312				12
13	-.106	-.112	-.139	-.172		-.211	-.208	-.318				13
14	-.100	-.111	-.134	-.165		-.204	-.212	-.249				14
15	-.114	-.136	-.150	-.175		-.220	-.194	-.297				15
16	-.124	-.091	-.107	-.113		-.135	-.107	-.117				16
17		-.062	-.076	-.089		-.098	-.091	-.252				17
18		-.126	-.122	-.160		-.214	-.229	-.298				18
19	-.130	-.162	-.165	-.206		-.249	-.266	-.325				19
20			-.173	-.201		-.251	-.259	-.298				20
21	-.163	-.173	-.179	-.206		-.238	-.254	-.324				21
22	-.098	-.072	-.132	-.163		-.166	-.207	-.322				22

Table 8 - Continued

Pressure coefficients on swept wing

Configuration 1 M=1.61 R=3.6 x 10^6

Orif	Station 1	2	3	4	24	5	6	7	8	9	10	Orif
					α= 6	δ= 0.0						
1	.886	.674	.619	.177		.758	.287	.886				1
2	.001	-.143	-.155	-.173		-.177	-.179	-.127				2
3	-.087	-.137	-.150	-.153		-.164	-.162	-.122				3
4	-.053	-.119	-.167	-.170		-.173	-.178	-.168				4
5	-.068	-.126	-.179	-.175		-.175	-.178	-.178				5
6	-.083	-.119	-.178	-.185		-.179	-.184	-.164				6
7	-.087	-.113	-.155	-.192		-.188	-.193	-.172				7
8	-.095	-.126	-.162	-.199		-.201	-.201	-.202				8
9	-.100	-.136	-.167	-.212		-.210	-.201	-.241				9
10	-.100	-.128		-.203		-.207	-.207	-.279				10
11	-.106	-.122		-.193		-.204						11
12	-.104	-.116		-.176		-.199	-.200	-.290				12
13	-.104	-.109	-.136	-.165		-.203	-.202	-.290				13
14	-.098	-.110	-.132	-.162		-.195	-.204	-.221				14
15	-.109	-.133	-.145	-.167		-.209	-.179	-.265				15
16	-.121	-.078	-.089	-.099		-.094	-.085	-.109				16
17		-.055	-.056	-.064		-.072	-.070	-.227				17
18		-.185	-.184	-.204		-.250	-.260	-.290				18
19	-.156	-.228	-.232	-.255		-.290	-.295	-.305				19
20			-.236	-.256		-.290	-.294	-.303				20
21	-.222	-.225	-.242	-.257		-.279	-.289	-.331				21
22	-.141	-.070	-.160	-.207		-.195	-.225	-.339				22
					α= 6	δ= 0.0						
1	.880	.680	.617	.158		.758	.280	.890				1
2	-.008	-.157	-.171	-.183		-.186	-.189	-.135				2
3	-.097	-.151	-.164	-.163		-.176	-.169	-.132				3
4	-.064	-.131	-.180	-.183		-.184	-.186	-.180				4
5	-.076	-.139	-.188	-.187		-.186	-.186	-.187				5
6	-.090	-.130	-.184	-.194		-.189	-.194	-.170				6
7	-.096	-.122	-.166	-.201		-.198		-.184				7
8	-.106	-.136	-.171	-.212		-.209	-.211	-.218				8
9	-.110	-.145	-.179	-.223		-.218		-.259				9
10	-.108	-.138		-.213		-.213		-.295				10
11	-.114	-.132		-.205		-.209						11
12	-.111	-.125		-.184		-.210		-.305				12
13	-.112	-.120	-.144	-.174		-.210		-.232				13
14	-.109	-.118	-.137	-.171		-.202		-.253				14
15	-.118	-.145	-.154	-.178		-.217	-.184	-.290				15
16	-.131	-.089	-.099	-.108		-.106	-.092	-.107				16
17		-.069	-.069	-.075		-.081	-.077	-.255				17
18		-.184	-.181	-.203		-.246	-.260	-.318				18
19	-.164	-.226	-.232	-.255		-.290	-.299	-.320				19
20			-.235	-.255		-.289	-.293	-.313				20
21	-.220	-.226	-.244	-.256		-.280	-.285	-.341				21
22	-.143	-.076	-.168	-.209		-.196	-.231	-.342				22
					α= 6	δ= 5.0						
1	.877	.675	.619	.159		.753	.282	.877				1
2	-.010	-.158	-.174	-.183		-.190	-.194	-.135				2
3	-.101	-.153	-.164	-.162		-.178	-.171	-.135				3
4	-.065	-.132	-.183	-.184		-.186	-.196	-.184				4
5	-.076	-.139	-.190	-.190		-.188	-.188	-.184				5
6	-.093	-.133	-.189	-.198		-.193	-.195	-.171				6
7	-.096	-.125	-.168	-.203		-.203	-.206	-.185				7
8	-.110	-.138	-.177	-.216		-.213	-.216	-.216				8
9	-.112	-.148	-.181	-.225		-.220	-.217	-.265				9
10	-.110	-.138		-.214		-.221	-.224	-.309				10
11	-.116	-.131		-.206		-.215						11
12	-.115	-.128		-.184		-.216	-.212	-.313				12
13	-.117	-.121	-.143	-.175		-.215	-.212	-.242				13
14	-.110	-.119	-.143	-.171		-.210	-.216	-.256				14
15	-.121	-.142	-.154	-.163		-.198	-.133	-.294				15
16	-.119	-.054	-.058	-.048		-.064	-.053	-.102				16
17		-.040	-.033	-.034		-.040	-.040	-.261				17
18		-.239	-.237	-.252		-.293	-.303	-.350				18
19	-.196	-.281	-.285	-.298		-.336	-.340	-.341				19
20			-.288	-.300		-.334	-.336	-.354				20
21	-.282	-.279	-.293	-.302		-.327	-.330	-.384				21
22	-.198	-.106	-.167	-.209		-.209	-.226	-.385				22

Table 8 · Continued

Pressure coefficients on swept wing

Configuration 1 M= 1.61 R= 3.6 x 10^6

Orif	Station 1	2	3	4	24	5	6	7	8	9	10	Orif
					α= 6		δ= 10.0					
1	.879	.673	.615	.160		.752	.286	.870				1
2	-.007	-.159	-.174	-.181		-.191	-.188	-.132				2
3	-.095	-.152	-.164	-.163		-.179	-.169	-.130				3
4	-.063	-.130	-.184	-.183		-.186	-.191	-.183				4
5	-.075	-.138	-.188	-.189		-.190	-.188	-.179				5
6	-.089	-.130	-.186	-.197		-.192	-.192	-.171				6
7	-.096	-.124	-.165	-.202		-.200	-.203	-.176				7
8	-.106	-.135	-.173	-.212		-.213	-.213	-.205				8
9	-.110	-.147	-.179	-.224		-.222	-.213	-.252				9
10	-.112	-.139		-.214		-.220	-.222	-.301				10
11	-.116	-.132		-.207		-.216						11
12	-.116	-.126		-.184		-.213	-.213	-.311				12
13	-.114	-.121	-.142	-.175		-.216	-.211	-.241				13
14	-.110	-.119	-.138	-.171		-.210	-.216	-.251				14
15	-.119	-.136	-.105	-.046		-.030	-.020	-.273				15
16	-.097	.002	.015	.031		.017	.006	-.084				16
17		.019	.026	.025		.026	.017	-.247				17
18		-.306	-.300	-.318		-.344	-.356	-.379				18
19	-.287	-.348	-.349	-.362		-.387	-.388	-.360				19
20			-.350	-.363		-.388	-.389	-.400				20
21	-.322	-.346	-.356	-.364		-.380	-.382	-.424				21
22	-.303	-.167	-.201	-.219		-.236	-.238	-.431				22
					α= 6		δ= 20.0					
1	.880	.678	.618	.169		.749	.296	.862				1
2	-.007	-.158	-.171	-.178		-.190	-.183	-.125				2
3	-.096	-.151	-.161	-.161		-.174	-.163	-.123				3
4	-.063	-.130	-.182	-.179		-.184	-.186	-.179				4
5	-.073	-.141	-.188	-.186		-.187	-.184	-.168				5
6	-.089	-.130	-.184	-.195		-.190	-.190	-.166				6
7	-.095	-.126	-.165	-.201		-.198	-.201	-.166				7
8	-.108	-.138	-.171	-.212		-.208	-.210	-.189				8
9	-.107	-.148	-.179	-.224		-.219	-.212	-.229				9
10	-.107	-.136		-.213		-.216	-.218	-.279				10
11	-.115	-.132		-.204		-.213						11
12	-.113	-.127		-.181		-.212	-.207	-.303				12
13	-.108	-.121	-.143	-.174		-.211	-.204	-.209				13
14	-.110	-.123	-.132	-.007		.002	-.017	-.190				14
15	-.115	-.085	.082	.084		.044	.042	-.168				15
16	-.057	.072	.115	.103		.062	.062	-.041				16
17		.051	.072	.033		-.021	.069	-.218				17
18		-.379	-.385	-.389		-.412	-.421	-.428				18
19	-.347	-.418	-.418	-.422		-.438	-.430	-.396				19
20			-.418	-.429		-.428	-.376	-.439				20
21	-.336	-.416	-.370	-.387		-.377	-.349	-.442				21
22	-.386	-.272	-.293	-.301		-.313	-.310	-.406				22
					α= 9		δ= 0.0					
1	.899	.414	.444	-.019		.737	.138	.992				1
2	-.050	-.226	-.242	-.261		-.270	-.279	-.263				2
3	-.143	-.224	-.235	-.245		-.256	-.259	-.268				3
4	-.100	-.213	-.248	-.254		-.260	-.270	-.271				4
5	-.111	-.177	-.256	-.258		-.261	-.262	-.334				5
6	-.126	-.176	-.256	-.260		-.263	-.267	-.374				6
7	-.130	-.164	-.254	-.262		-.264	-.273	-.386				7
8	-.140	-.172	-.257	-.269		-.271	-.274	-.395				8
9	-.144	-.180	-.236	-.280		-.279	-.274	-.405				9
10	-.143	-.170		-.273		-.275	-.279	-.385				10
11	-.148	-.168		-.273		-.270						11
12	-.147	-.160		-.269		-.267	-.272	-.392				12
13	-.148	-.153	-.185	-.268		-.271	-.273	-.410				13
14	-.141	-.153	-.179	-.255		-.264	-.274	-.349				14
15	-.150	-.174	-.186	-.209		-.235	-.178	-.386				15
16	-.145	-.085	-.096	-.100		-.111	-.113	-.193				16
17		-.065	-.072	-.087		-.100	-.094	-.354				17
18		-.223	-.227	-.262		-.304	-.315	-.387				18
19	-.198	-.263	-.273	-.304		-.345	-.345	-.385				19
20			-.276	-.300		-.349	-.340	-.399				20
21	-.255	-.264	-.281	-.298		-.348	-.336	-.401				21
22	-.163	-.089	-.138	-.171		-.212	-.222	-.379				22

Table 8 - Continued

Pressure coefficients on swept wing

Configuration 1 M= 1.61 R= 3.6 x 10^6

Orif	Station 1	2	3	4	24	5	6	7	8	9	10	Orif
					α= 9	δ= 0.0						
1	.898	.409	.440	-.036		.735	.135	.991				1
2	-.052	-.230	-.246	-.265		-.271	-.281	-.266				2
3	-.145	-.229	-.239	-.245		-.260	-.258	-.272				3
4	-.103	-.218	-.255	-.257		-.263	-.274	-.274				4
5	-.116	-.181	-.259	-.262		-.264	-.265	-.334				5
6	-.127	-.182	-.259	-.264		-.266	-.270	-.369				6
7	-.136	-.168	-.258	-.265		-.268	-.278	-.378				7
8	-.147	-.178	-.261	-.274		-.278	-.278	-.389				8
9	-.147	-.186	-.242	-.283		-.282	-.278	-.399				9
10	-.147	-.177		-.276		-.278	-.280	-.382				10
11	-.153	-.171		-.275		-.276						11
12	-.152	-.164		-.274		-.273	-.274	-.390				12
13	-.151	-.159	-.189	-.270		-.273	-.276	-.342				13
14	-.147	-.159	-.181	-.259		-.267	-.279	-.349				14
15	-.155	-.177	-.194	-.219		-.246	-.186	-.386				15
16	-.140	-.095	-.107	-.110		-.120	-.119	-.182				16
17		-.069	-.081	-.096		-.106	-.100	-.357				17
18		-.217	-.211	-.262		-.304	-.319	-.401				18
19	-.196	-.259	-.268	-.307		-.350	-.356	-.388				19
20			-.271	-.300		-.358	-.348	-.407				20
21	-.248	-.263	-.276	-.298		-.351	-.337	-.419				21
22	-.167	-.088	-.143	-.180		-.219	-.237	-.396				22
					α= 12	δ= -30.0						
1	.963	.222	.185	-.249		.633	-.036	.849				1
2	-.096	-.309	-.334	-.357		-.376	-.401	-.444				2
3	-.183	-.301	-.320	-.336		-.354	-.373	-.465				3
4	-.144	-.306	-.324	-.337		-.350	-.366	-.475				4
5	-.154	-.279	-.326	-.339		-.347	-.362	-.478				5
6	-.169	-.233	-.327	-.338		-.344	-.357	-.471				6
7	-.172	-.218	-.328	-.339		-.345	-.268	-.463				7
8	-.181	-.220	-.336	-.343		-.270	-.214	-.438				8
9	-.184	-.223	-.340	-.351		-.187	-.189	-.404				9
10	-.185	-.214		-.278		-.176	-.152	-.352				10
11	-.188	-.210		-.167		-.144						11
12	-.189	-.206		-.116		-.140	-.137	-.290				12
13	-.190	-.200	-.094	-.107		-.133	-.121	-.293				13
14	-.184	-.185	-.041	-.098		-.125	-.120	-.234				14
15	-.191	.053	-.002	-.106		-.111	-.113	-.225				15
16	-.152	.068	-.041	-.122		-.109	-.124	-.069				16
17		-.119	-.229	-.101		.119	.068	-.152				17
18		.090	.051	-.058		-.108	-.118	-.232				18
19	.129	.210	.024	-.061		-.062	-.071	-.306				19
20			.222	-.081		-.065	-.059	-.323				20
21	.173	.410	.431	-.050		-.063	-.061	-.327				21
22	.192	.341	.414	-.085		-.107	-.115	-.342				22
					α= 12	δ= -20.0						
1	.956	.222	.183	-.248		.632	-.032	.848				1
2	-.097	-.311	-.333	-.355		-.375	-.401	-.472				2
3	-.184	-.303	-.321	-.333		-.354	-.372	-.482				3
4	-.144	-.308	-.325	-.336		-.350	-.367	-.495				4
5	-.158	-.282	-.330	-.337		-.347	-.362	-.511				5
6	-.174	-.236	-.329	-.336		-.344	-.356	-.509				6
7	-.174	-.217	-.331	-.337		-.346	-.358	-.503				7
8	-.184	-.222	-.337	-.342		-.350	-.362	-.504				8
9	-.186	-.227	-.342	-.351		-.354	-.360	-.497				9
10	-.187	-.217		-.344		-.354	-.359	-.479				10
11	-.191	-.211		-.343		-.350						11
12	-.193	-.207		-.338		-.345	-.350	-.481				12
13	-.193	-.201	-.250	-.214		-.229	-.233	-.502				13
14	-.186	-.202	-.124	-.155		-.181	-.192	-.470				14
15	-.194	-.064	-.060	-.129		-.153	-.158	-.463				15
16	-.168	.006	-.041	-.114		-.138	-.154	-.208				16
17		-.052	-.127	-.196		-.242	-.230	-.181				17
18		.013	-.030	-.099		-.128	-.136	-.464				18
19	-.036	.085	-.009	-.081		-.104	-.102	-.469				19
20			.060	-.078		-.106	-.091	-.450				20
21	-.003	.116	.127	-.075		-.104	-.090	-.426				21
22	.042	.083	.122	-.097		-.119	-.119	-.376				22

Table 8 · Continued

Pressure coefficients on swept wing

Configuration 1 M=1.61 R=3.6 x 10^6

Orif	Station 1	2	3	4	24	5	6	7	8	9	10	Orif
					α= 12		δ= -10.0					
1	.961	.226	.189	-.241		.640	-.025	.852				1
2	-.096	-.307	-.329	-.351		-.369	-.396	-.458				2
3	-.182	-.298	-.318	-.329		-.348	-.365	-.471				3
4	-.141	-.305	-.322	-.332		-.348	-.361	-.482				4
5	-.152	-.277	-.324	-.333		-.342	-.354	-.497				5
6	-.169	-.230	-.326	-.334		-.338	-.350	-.499				6
7	-.172	-.215	-.326	-.334		-.341	-.354	-.493				7
8	-.179	-.219	-.334	-.338		-.347	-.357	-.493				8
9	-.183	-.224	-.336	-.348		-.354	-.354	-.489				9
10	-.184	-.215		-.341		-.350	-.354	-.472				10
11	-.189	-.209		-.341		-.346						11
12	-.188	-.205		-.335		-.342	-.349	-.474				12
13	-.187	-.198	-.246	-.334		-.339	-.346	-.506				13
14	-.181	-.196	-.236	-.333		-.336	-.347	-.475				14
15	-.190	-.211	-.198	-.293		-.321	-.258	-.479				15
16	-.178	-.101	-.122	-.187		-.214	-.202	-.224				16
17		-.052	-.089	-.127		-.164	-.159	-.373				17
18		-.105	-.134	-.229		-.261	-.279	-.476				18
19	-.130	-.109	-.140	-.242		-.289	-.296	-.485				19
20			-.140	-.224		-.302	-.281	-.484				20
21	-.139	-.129	-.134	-.206		-.294	-.275	-.469				21
22	-.079	-.049	-.086	-.123		-.182	-.202	-.429				22
					α= 12		δ= - 5.0					
1	.959	.225	.189	-.243		.639	-.020	.856				1
2	-.094	-.307	-.331	-.355		-.371	-.392	-.451				2
3	-.182	-.301	-.317	-.331		-.350	-.364	-.457				3
4	-.141	-.307	-.321	-.335		-.346	-.357	-.469				4
5	-.154	-.279	-.324	-.332		-.341	-.352	-.487				5
6	-.170	-.233	-.325	-.335		-.339	-.350	-.490				6
7	-.172	-.216	-.326	-.335		-.341	-.352	-.485				7
8	-.182	-.219	-.333	-.339		-.347	-.354	-.486				8
9	-.185	-.223	-.338	-.349		-.350	-.352	-.481				9
10	-.185	-.215		-.342		-.349	-.352	-.465				10
11	-.189	-.209		-.342		-.346						11
12	-.190	-.206		-.336		-.338	-.346	-.465				12
13	-.189	-.198	-.243	-.335		-.339	-.342	-.494				13
14	-.183	-.198	-.236	-.335		-.333	-.343	-.460				14
15	-.191	-.213	-.217	-.290		-.291	-.237	-.470				15
16	-.178	-.117	-.136	-.187		-.194	-.190	-.220				16
17		-.080	-.118	-.149		-.163	-.143	-.429				17
18		-.189	-.201	-.309		-.320	-.339	-.469				18
19	-.179	-.221	-.237	-.346		-.362	-.364	-.477				19
20			-.241	-.332		-.372	-.358	-.480				20
21	-.222	-.231	-.243	-.307		-.365	-.349	-.465				21
22	-.134	-.065	-.114	-.161		-.220	-.220	-.423				22
					α= 12		δ= 0.0					
1	.963	.226	.193	-.233		.643	-.016	.857				1
2	-.098	-.303	-.320	-.346		-.352	-.379	-.422				2
3	-.181	-.295	-.312	-.324		-.339	-.352	-.423				3
4	-.140	-.299	-.317	-.327		-.336	-.345	-.430				4
5	-.153	-.274	-.321	-.325		-.334	-.340	-.458				5
6	-.170	-.230	-.322	-.328		-.332	-.341	-.465				6
7	-.170	-.212	-.322	-.328		-.335	-.343	-.462				7
8	-.180	-.218	-.327	-.331		-.340	-.345	-.465				8
9	-.183	-.223	-.331	-.342		-.344	-.344	-.464				9
10	-.183	-.210		-.335		-.339	-.343	-.448				10
11	-.187	-.206		-.333		-.337						11
12	-.186	-.201		-.330		-.332	-.336	-.452				12
13	-.188	-.194	-.243	-.329		-.332	-.336	-.472				13
14	-.182	-.194	-.233	-.325		-.326	-.338	-.435				14
15	-.189	-.208	-.200	-.222		-.226	-.199	-.447				15
16	-.166	-.102	-.122	-.159		-.160	-.168	-.218				16
17		-.072	-.108	-.130		-.140	-.128	-.422				17
18		-.253	-.262	-.334		-.348	-.362	-.445				18
19	-.233	-.286	-.298	-.373		-.389	-.388	-.452				19
20			-.300	-.370		-.392	-.384	-.460				20
21	-.277	-.286	-.305	-.344		-.384	-.371	-.447				21
22	-.186	-.103	-.140	-.207		-.244	-.236	-.408				22

Table 8 · Continued

Pressure coefficients on swept wing

Configuration 1 M= 1.61 R= 3.6 x 10^6

Orif	Station 1	2	3	4	24	5	6	7	8	9	10	Orif
					α= 12		δ= 0.0					
1	.954	.211	.196	-.239		.641	-.013	.863				1
2	-.100	-.314	-.334	-.354		-.368	-.393	-.455				2
3	-.190	-.306	-.320	-.332		-.348	-.361	-.466				3
4	-.147	-.312	-.329	-.335		-.348	-.361	-.500				4
5	-.157	-.277	-.330	-.335		-.343	-.353	-.513				5
6	-.174	-.237	-.328	-.335		-.344	-.348	-.512				6
7	-.178	-.220	-.333	-.335		-.344	-.358	-.506				7
8	-.189	-.226	-.340	-.343		-.351	-.356	-.505				8
9	-.188	-.232	-.340	-.351		-.355	-.354	-.499				9
10	-.190	-.220		-.342		-.354	-.354	-.478				10
11	-.194	-.213		-.340		-.348						11
12	-.192	-.210		-.337		-.343	-.348	-.479				12
13	-.194	-.203	-.248	-.336		-.344	-.348	-.474				13
14	-.193	-.202	-.239	-.338		-.335	-.348	-.475				14
15	-.198	-.218	-.185	-.199		-.199	-.184	-.477				15
16	-.160	-.101	-.119	-.155		-.157	-.160	-.212				16
17		-.074	-.102	-.128		-.131	-.121	-.466				17
18		-.287	-.283	-.361		-.375	-.389	-.486				18
19	-.257	-.317	-.328	-.408		-.419	-.410	-.498				19
20			-.327	-.402		-.415	-.379	-.489				20
21	-.312	-.322	-.336	-.350		-.359	-.343	-.470				21
22	-.200	-.126	-.166	-.234		-.269	-.257	-.428				22
					α= 12		δ= 5.0					
1	.957	.214	.195	-.239		.646	-.010	.868				1
2	-.099	-.313	-.331	-.353		-.368	-.391	-.457				2
3	-.189	-.305	-.317	-.332		-.350	-.361	-.467				3
4	-.144	-.310	-.326	-.333		-.344	-.361	-.502				4
5	-.158	-.277	-.326	-.338		-.342	-.351	-.518				5
6	-.171	-.234	-.326	-.334		-.342	-.348	-.518				6
7	-.177	-.217	-.331	-.334		-.342	-.356	-.514				7
8	-.184	-.225	-.337	-.343		-.348	-.357	-.509				8
9	-.186	-.230	-.341	-.349		-.354	-.355	-.502				9
10	-.188	-.215		-.342		-.348	-.355	-.481				10
11	-.191	-.212		-.339		-.349						11
12	-.193	-.210		-.336		-.342	-.348	-.479				12
13	-.191	-.202	-.248	-.336		-.341	-.349	-.471				13
14	-.189	-.198	-.236	-.336		-.334	-.348	-.478				14
15	-.191	-.213	-.160	-.184		-.181	-.181	-.481				15
16	-.148	-.086	-.098	-.148		-.148	-.158	-.215				16
17		-.059	-.088	-.113		-.116	-.113	-.470				17
18		-.293	-.292	-.361		-.376	-.389	-.491				18
19	-.259	-.326	-.338	-.405		-.416	-.414	-.503				19
20			-.335	-.407		-.418	-.382	-.497				20
21	-.320	-.325	-.340	-.348		-.352	-.337	-.474				21
22	-.197	-.143	-.184	-.240		-.269	-.264	-.430				22
					α= 12		δ= 10.0					
1	.955	.212	.196	-.243		.642	-.008	.875				1
2	-.102	-.312	-.332	-.354		-.370	-.397	-.455				2
3	-.189	-.304	-.319	-.334		-.350	-.366	-.464				3
4	-.144	-.311	-.326	-.334		-.347	-.361	-.505				4
5	-.157	-.279	-.328	-.337		-.343	-.355	-.518				5
6	-.176	-.236	-.329	-.338		-.343	-.350	-.517				6
7	-.177	-.219	-.333	-.334		-.344	-.356	-.512				7
8	-.190	-.225	-.339	-.343		-.349	-.357	-.509				8
9	-.188	-.229	-.341	-.352		-.354	-.357	-.501				9
10	-.191	-.220		-.343		-.352	-.356	-.479				10
11	-.192	-.214		-.343		-.348						11
12	-.194	-.209		-.337		-.345	-.349	-.478				12
13	-.193	-.203	-.251	-.337		-.343	-.348	-.473				13
14	-.188	-.201	-.235	-.328		-.329	-.335	-.477				14
15	-.194	-.198	-.102	-.151		-.148	-.153	-.478				15
16	-.132	-.055	-.075	-.122		-.129	-.142	-.205				16
17		-.013	-.052	-.132		-.071	-.043	-.471				17
18		-.334	-.335	-.388		-.402	-.415	-.489				18
19	-.304	-.367	-.374	-.429		-.424	-.389	-.499				19
20			-.375	-.427		-.389	-.342	-.482				20
21	-.367	-.364	-.364	-.342		-.331	-.315	-.460				21
22	-.286	-.193	-.231	-.290		-.304	-.289	-.425				22

Table 8 Concluded

Pressure coefficients on swept wing

Configuration 1 M= 1.61 R= 3.6 x 10^6

Orif	Station 1	2	3	4	24	5	6	7	8	9	10	Orif
					α= 12		δ= 20.0					
1	.950	.215	.198	-.242		.653	-.002	.890				1
2	-.099	-.311	-.334	-.352		-.362	-.390	-.443				2
3	-.191	-.303	-.322	-.329		-.339	-.359	-.449				3
4	-.148	-.312	-.328	-.333		-.339	-.356	-.506				4
5	-.161	-.276	-.330	-.334		-.339	-.350	-.523				5
6	-.175	-.234	-.330	-.332		-.338	-.347	-.520				6
7	-.181	-.216	-.334	-.333		-.337	-.351	-.517				7
8	-.191	-.224	-.337	-.339		-.349	-.355	-.517				8
9	-.191	-.228	-.344	-.352		-.353	-.354	-.505				9
10	-.193	-.218		-.342		-.349	-.353	-.477				10
11	-.194	-.214		-.340		-.348						11
12	-.195	-.211		-.335		-.340	-.346	-.475				12
13	-.194	-.205	-.247	-.334		-.341	-.336	-.468				13
14	-.191	-.201	-.133	-.157		-.146	-.161	-.480				14
15	-.195	-.096	-.058	-.119		-.129	-.126	-.476				15
16	-.103	-.007	-.034	-.095		-.102	-.089	-.211				16
17		-.048	-.143	-.255		-.300	-.003	-.480				17
18		-.414	-.416	-.446		-.429	-.443	-.501				18
19	-.383	-.438	-.440	-.430		-.370	-.370	-.502				19
20			-.391	-.387		-.353	-.351	-.477				20
21	-.363	-.425	-.339	-.362		-.348	-.348	-.464				21
22	-.410	-.286		-.342		-.341	-.342	-.451				22
					α= 15		δ= 0.0					
1	.994	.074	-.065	-.381		.410	-.236	.669				1
2	-.133	-.368	-.394	-.424		-.439	-.454	-.491				2
3	-.214	-.359	-.381	-.404		-.417	-.436	-.495				3
4	-.182	-.356	-.378	-.394		-.409	-.422	-.498				4
5	-.193	-.351	-.379	-.390		-.404	-.414	-.506				5
6	-.204	-.307	-.376	-.388		-.402	-.413	-.505				6
7	-.207	-.270	-.376	-.388		-.398	-.412	-.499				7
8	-.218	-.262	-.380	-.389		-.401	-.406	-.492				8
9	-.218	-.261	-.384	-.394		-.402	-.406	-.487				9
10	-.221	-.251		-.387		-.397	-.403	-.482				10
11	-.223	-.245		-.385		-.394						11
12	-.222	-.239		-.383		-.388	-.396	-.487				12
13	-.221	-.234	-.313	-.383		-.386	-.397	-.521				13
14	-.217	-.231	-.287	-.379		-.383	-.393	-.484				14
15	-.224	-.242	-.215	-.256		-.256	-.250	-.479				15
16	-.177	-.114	-.201	-.212		-.211	-.218	-.234				16
17		-.078	-.134	-.146		-.152	-.147	-.431				17
18		-.276	-.308	-.367		-.380	-.391	-.473				18
19	-.255	-.301	-.329	-.403		-.410	-.393	-.479				19
20			-.330	-.385		-.333	-.324	-.480				20
21	-.294	-.300	-.330	-.277		-.291	-.291	-.467				21
22	-.204	-.090	-.180	-.262		-.275	-.275	-.443				22
					α= 15		δ= 0.0					
1	.986	.061	-.078	-.399		.400	-.254	.668				1
2	-.140	-.380	-.408	-.436		-.453	-.471	-.504				2
3	-.222	-.369	-.392	-.415		-.434	-.454	-.501				3
4	-.192	-.369	-.387	-.404		-.422	-.439	-.520				4
5	-.203	-.363	-.389	-.402		-.419	-.433	-.528				5
6	-.211	-.315	-.386	-.400		-.413	-.430	-.526				6
7	-.214	-.276	-.383	-.399		-.409	-.429	-.523				7
8	-.224	-.268	-.389	-.398		-.415	-.423	-.519				8
9	-.229	-.267	-.396	-.405		-.415	-.420	-.514				9
10	-.229	-.258		-.396		-.410	-.416	-.508				10
11	-.232	-.252		-.398		-.406						11
12	-.231	-.247		-.393		-.402	-.413	-.504				12
13	-.229	-.242	-.320	-.393		-.402	-.410	-.520				13
14	-.227	-.240	-.270	-.388		-.394	-.407	-.508				14
15	-.230	-.250	-.205	-.240		-.230	-.237	-.502				15
16	-.157	-.095	-.199	-.208		-.209	-.216	-.222				16
17		-.054	-.095	-.105		-.106	-.116	-.480				17
18		-.315	-.338	-.395		-.408	-.418	-.522				18
19	-.285	-.338	-.359	-.434		-.407	-.377	-.508				19
20			-.360	-.381		-.338	-.327	-.500				20
21	-.332	-.336	-.361	-.305		-.316	-.307	-.485				21
22	-.200	-.134	-.225	-.292		-.304	-.297	-.465				22

Table 9

Pressure coefficients on swept wing

Configuration 2 M= 1.61 R= 1.7 x 10^6

Orif	Station 1	2	3	4	24	5	6	7	8	9	10	Orif
					α= -15		δ= 0.0					
1	.642	.668	.628	.467		-.171	.415	-.233				1
2	.501	.602	.658	.686		.706	.759	.545				2
3	.453	.523	.612	.644		.658	.725	.439				3
4	.439	.483	.541	.582		.610	.680	.338				4
5	.431	.477	.515	.545		.572	.668	.260				5
6	.419	.465	.481	.515		.551	.632	.223				6
7	.439	.423	.455	.495		.537	.618	.205				7
8	.455	.403	.425	.483		.539	.620	.187				8
9	.429	.378	.447	.463		.551	.604	.153				9
10	.409	.403		.479		.560	.572	.125				10
11	.409	.413		.487		.555						11
12	.407	.419		.495		.547	.529	.046				12
13	.411	.423	.451	.489		.527	.491	.008				13
14	.407	.398	.415	.449		.493	.437	-.104				14
15	.405	.332	.344	.364		.346	.360	-.062				15
16	.481	.089	.137	.066		.123	.076	.303				16
17		.097	.103	.076		.089	.097	-.077				17
18		.471	.529	.698		.811	.761	.162				18
19	.388	.443	.539	.634		.674	.612	.116				19
20	.398	.453	.553	.608		.628	.519	.071				20
21	.431	.475	.562	.580		.576	.483	.031				21
22	.390	.382	.447	.455		.439	.372	.008				22
					α= -12		δ= -30.0					
1	.733	.688	.725	.644		.105	.465	-.280				1
2	.413	.481	.519	.535		.712	.877	.598				2
3	.346	.394	.443	.493		.749	.849	.499				3
4	.340	.344	.396	.433		.761	.821	.401				4
5	.320	.328	.366	.403		.781	.813	.322				5
6	.292	.310	.346	.586		.801	.797	.316				6
7	.292	.294	.318	.745		.823	.801	.300				7
8	.288	.264	.286	.821		.845	.801	.302				8
9	.282	.260	.666	.853		.853	.801	.270				9
10	.260	.266		.873		.869	.801	.284				10
11	.266	.419		.882		.871						11
12	.276	.694		.888		.867	.801	.244				12
13	.370	.747	.837	.886		.869	.813	.216				13
14	.624	.783	.831	.873		.853	.817	-.112				14
15	.723	.815	.829	.849		.839	.815	.091				15
16	.749	.658	.737	.821		.819	.795	.544				16
17		.326	.141	.268		.352	.447	-.423				17
18		.871	.898	.847		.845	.825	.224				18
19	.978	1.218	1.004	.869		.849	.829	.305				19
20	1.055	1.260	1.159	.932		.843	.789	.264				20
21	.954	1.117	1.091	.938		.799	.745	.220				21
22	.743	.721	.751	.680		.574	.527	.158				22
					α= -12		δ= -20.0					
1	.739	.686	.723	.632		.091	.636	-.153				1
2	.413	.477	.513	.531		.576	.729	.553				2
3	.348	.396	.445	.481		.495	.729	.453				3
4	.336	.334	.394	.421		.463	.727	.366				4
5	.328	.320	.354	.392		.427	.735	.286				5
6	.294	.304	.332	.364		.423	.731	.278				6
7	.290	.292	.308	.338		.640	.737	.262				7
8	.286	.264	.272	.324		.708	.745	.266				8
9	.274	.252	.282	.401		.745	.749	.246				9
10	.264	.264		.656		.767	.749	.242				10
11	.262	.282		.743		.785						11
12	.270	.298		.787		.799	.761	.201				12
13	.284	.316	.737	.813		.815	.767	.191				13
14	.286	.596	.779	.829		.827	.771	-.108				14
15	.362	.731	.799	.841		.825	.777	.066				15
16	.485	.735	.789	.829		.817	.765	.519				16
17		.570	.682	.716		.654	.590	-.369				17
18		.765	.805	.841		.873	.869	.266				18
19	.813	1.032	.940	.902		.912	.853	.307				19
20	.841	1.039	1.014	.930		.888	.767	.245				20
21	.815	.940	.944	.882		.783	.698	.191				21
22	.666	.626	.656	.622		.560	.475	.133				22

Table 9 - Continued

Pressure coefficients on swept wing

Configuration 2 M= 1.61 R= 1.7 x 10^6

Orif	Station 1	2	3	4	24	5	6	7	8	9	10	Orif
					α= -12		δ= -10.0					
1	.739	.698	.737	.626		.087	.632	.157				1
2	.415	.487	.519	.533		.578	.590	.350				2
3	.356	.403	.451	.479		.501	.539	.282				3
4	.344	.348	.394	.419		.459	.477	.201				4
5	.326	.328	.350	.394		.431	.451	.187				5
6	.296	.320	.326	.362		.398	.429	.213				6
7	.298	.296	.308	.340		.376	.390	.209				7
8	.294	.270	.272	.318		.348	.398	.215				8
9	.286	.252	.282	.324		.354	.447	.203				9
10	.264	.274		.332		.356	.608	.187				10
11	.272	.292		.334		.364						11
12	.272	.306		.338		.421	.680	.149				12
13	.288	.314	.328	.332		.594	.688	.133				13
14	.286	.306	.300	.407		.662	.684	-.091				14
15	.296	.256	.344	.584		.664	.656	.046				15
16	.362	.262	.457	.604		.638	.624	.475				16
17		.268	.455	.606		.634	.568	-.403				17
18		.630	.676	.793		.922	.833	.264				18
19	.469	.686	.789	.875		.902	.773	.274				19
20	.517	.654	.745	.817		.811	.678	.208				20
21	.553	.636	.714	.749		.739	.618	.158				21
22	.495	.473	.547	.557		.535	.449	.108				22
					α= -12		δ= - 5.0					
1	.739	.700	.733	.642		.087	.628	.157				1
2	.411	.481	.517	.533		.590	.590	.354				2
3	.358	.401	.449	.485		.507	.539	.286				3
4	.342	.348	.392	.421		.469	.489	.197				4
5	.330	.334	.358	.409		.433	.453	.139				5
6	.292	.310	.342	.372		.405	.421	.119				6
7	.294	.302	.318	.348		.380	.392	.099				7
8	.290	.276	.286	.330		.358	.396	.099				8
9	.280	.252	.296	.328		.360	.403	.078				9
10	.266	.270		.340		.364	.401	.052				10
11	.270	.292		.344		.368						11
12	.270	.296		.342		.368	.401	.046				12
13	.284	.312	.332	.342		.368	.376	.075				13
14	.286	.304	.308	.322		.350	.360	-.089				14
15	.286	.248	.254	.274		.262	.429	.031				15
16	.344	.179	.151	.173		.183	.300	.440				16
17		.185	.171	.201		.231	.229	-.324				17
18		.469	.497	.562		.779	.880	.266				18
19	.368	.479	.566	.632		.749	.739	.239				19
20	.407	.471	.527	.596		.708	.624	.172				20
21	.425	.467	.513	.564		.658	.564	.129				21
22	.382	.358	.417	.497		.489	.427	.087				22
					α= -12		δ= 0.0					
1	.749	.698	.743	.636		.085	.640	.149				1
2	.423	.485	.521	.533		.576	.596	.350				2
3	.354	.398	.447	.483		.499	.539	.284				3
4	.344	.344	.398	.427		.459	.487	.193				4
5	.326	.330	.358	.396		.433	.455	.133				5
6	.294	.314	.340	.370		.403	.435	.101				6
7	.300	.294	.314	.348		.380	.392	.083				7
8	.302	.274	.278	.318		.354	.398	.078				8
9	.286	.254	.286	.332		.358	.403	.052				9
10	.276	.276		.342		.358	.396	.038				10
11	.276	.290		.346		.364						11
12	.278	.302		.346		.364	.390	-.018				12
13	.286	.302	.332	.344		.360	.376	-.077				13
14	.290	.306	.304	.314		.350	.350	-.151				14
15	.288	.246	.246	.262		.242	.237	-.212				15
16	.358	-.018	.044	-.044		.032	-.161	.154				16
17		-.016	-.058	-.093		-.139	-.123	-.201				17
18		.334	.362	.376		.425	.413	.081				18
19	.274	.308	.342	.362		.390	.421	.068				19
20	.286	.320	.340	.362		.390	.417	.044				20
21	.310	.320	.336	.360		.405	.396	.021				21
22	.270	.260	.294	.312		.340	.310	.019				22

Table 9 - Continued

Pressure coefficients on swept wing

Configuration 2 M=1.61 R=1.7 x 10^6

Orif	Station 1	2	3	4	24	5	6	7	8	9	10	Orif
					α= -12		δ= 5.0					
1	.743	.700	.743	.640		.072	.624	.141				1
2	.419	.481	.525	.539		.586	.600	.358				2
3	.356	.401	.453	.493		.505	.543	.286				3
4	.344	.344	.401	.433		.469	.489	.201				4
5	.324	.330	.362	.401		.437	.457	.133				5
6	.294	.322	.344	.374		.403	.439	.113				6
7	.298	.298	.318	.348		.390	.398	.091				7
8	.296	.280	.290	.330		.358	.405	.085				8
9	.286	.256	.294	.338		.360	.407	.060				9
10	.272	.272		.342		.362	.401	.044				10
11	.272	.290		.352		.368						11
12	.272	.302		.348		.370	.394	-.006				12
13	.284	.312	.338	.346		.366	.384	-.071				13
14	.288	.306	.312	.316		.350	.350	-.141				14
15	.286	.250	.252	.264		.258	.237	-.216				15
16	.348	-.022	.046	-.048		.042	-.171	.120				16
17		-.030	-.064	-.119		-.177	-.131	-.195				17
18		.135	.145	.153		.161	.141	-.054				18
19	.183	.147	.131	.135		.153	.153	-.087				19
20	.183	.173	.157	.151		.165	.167	-.116				20
21	.167	.187	.169	.153		.167	.169	-.106				21
22	.117	.157	.163	.159		.157	.149	-.081				22
					α= -12		δ= 10.0					
1	.743	.698	.735	.630		.076	.620	.127				1
2	.413	.481	.517	.535		.580	.598	.356				2
3	.352	.396	.451	.483		.503	.543	.292				3
4	.344	.344	.398	.431		.463	.489	.201				4
5	.320	.332	.356	.398		.433	.455	.133				5
6	.294	.314	.336	.372		.405	.439	.109				6
7	.292	.296	.314	.348		.382	.394	.085				7
8	.290	.274	.284	.328		.362	.405	.083				8
9	.278	.250	.286	.330		.366	.405	.058				9
10	.266	.272		.340		.366	.401	.040				10
11	.270	.286		.342		.370						11
12	.270	.296		.344		.366	.394	-.020				12
13	.288	.304	.326	.344		.366	.380	-.071				13
14	.288	.304	.304	.322		.354	.352	-.141				14
15	.288	.246	.252	.268		.254	.246	-.216				15
16	.324	-.006	.044	-.038		.044	-.159	.118				16
17		-.008	-.042	-.093		-.177	-.117	-.185				17
18		.004	.006	.028		.028	.016	-.127				18
19	.078	.010	.006	.010		.024	.022	-.162				19
20	.091	.034	.016	.022		.030	.028	-.185				20
21	.070	.074	.026	.032		.042	.034	-.172				21
22	.028	.062	.028	.034		.048	.032	-.147				22

Table 9 · Continued

Pressure coefficients on swept wing

Configuration 2 M=1.61 R=1.7 x 10^6

Orif	Station 1	2	3	4	24	5	6	7	8	9	10	Orif
					α=-12		δ= 30.0					
1	.725	.690	.739	.636		.076	.616	.105				1
2	.421	.481	.515	.543		.600	.618	.366				2
3	.358	.405	.455	.495		.519	.555	.302				3
4	.344	.346	.394	.437		.483	.505	.211				4
5	.324	.332	.366	.411		.447	.467	.141				5
6	.298	.314	.346	.386		.419	.449	.117				6
7	.298	.292	.326	.364		.394	.415	.097				7
8	.296	.278	.290	.340		.370	.419	.089				8
9	.286	.258	.306	.350		.374	.423	.068				9
10	.274	.274		.356		.374	.415	.048				10
11	.274	.296		.354		.380						11
12	.274	.306		.356		.376	.403	.012				12
13	.290	.320	.346	.354		.368	.390	-.033				13
14	.296	.310	.322	.330		.356	.360	-.073				14
15	.284	.250	.256	.282		.254	.258	-.087				15
16	.276	.143	.127	-.008		.066	.018	.203				16
17		.153	.133	-.060		-.052	.000	-.131				17
18		-.175	-.203	-.145		-.167	-.133	-.133				18
19	-.095	-.211	-.195	-.145		-.161	-.129	-.129				19
20	-.107	-.207	-.185	-.157		-.135	-.143	-.164				20
21	-.139	-.161	-.189	-.145		-.135	-.137	-.156				21
22	-.139	-.141	-.191	-.173		-.133	-.133	-.147				22
					α=- 9		δ= 0.0					
1	.811	.706	.759	.698		.298	.718	.459				1
2	.358	.394	.443	.473		.487	.497	.290				2
3	.278	.310	.354	.386		.388	.431	.199				3
4	.262	.266	.306	.342		.366	.386	.129				4
5	.260	.252	.278	.318		.330	.348	.048				5
6	.229	.237	.264	.290		.312	.322	.032				6
7	.227	.219	.250	.260		.282	.278	.004				7
8	.223	.195	.205	.219		.239	.272	.002				8
9	.215	.177	.193	.215		.231	.270	-.012				9
10	.189	.189		.225		.242	.266	-.028				10
11	.199	.199		.233		.246						11
12	.197	.197		.239		.248	.274	-.058				12
13	.203	.201	.233	.233		.246	.266	-.127				13
14	.203	.203	.219	.215		.242	.254	-.164				14
15	.197	.157	.169	.179		.171	.177	-.226				15
16	.290	-.040	-.006	-.056		-.004	-.089	.118				16
17		-.036	-.052	-.066		-.105	-.070	-.268				17
18		.231	.250	.254		.286	.258	-.015				18
19	.189	.213	.225	.231		.262	.246	-.046				19
20	.197	.205	.221	.233		.254	.225	-.066				20
21	.193	.199	.221	.233		.246	.213	-.077				21
22	.169	.161	.199	.211		.213	.165	-.060				22

Table 9 · Continued

Pressure coefficients on swept wing

Configuration 2 M= 1.61 R=1.7 x 10^6

Orif	Station 1	2	3	4	24	5	6	7	8	9	10	Orif
					α= − 6		δ= −30.0					
1	.825	.686	.753	.718		.543	.743	.592				1
2	.244	.304	.336	.372		.378	.388	.314				2
3	.193	.211	.254	.270		.268	.338	.280				3
4	.193	.175	.203	.227		.258	.499	.215				4
5	.177	.159	.175	.205		.227	.570	.169				5
6	.149	.153	.165	.185		.338	.596	.161				6
7	.153	.145	.157	.169		.582	.620	.161				7
8	.137	.117	.125	.161		.620	.634	.171				8
9	.137	.105	.111	.519		.634	.638	.171				9
10	.123	.107		.572		.636	.630	.175				10
11	.123	.119		.586		.632						11
12	.121	.125		.584		.614	.610	.161				12
13	.123	.215	.553	.580		.596	.600	.108				13
14	.123	.505	.564	.562		.574	.586	−.162				14
15	.258	.560	.541	.535		.543	.568	.056				15
16	.374	.481	.384	.443		.523	.560	.436				16
17		.276	.246	.336		.274	.288	−.303				17
18		.578	.620	.612		.545	.547	.139				18
19	.747	.936	.692	.602		.551	.549	.230				19
20	.777	1.139	1.119	.781		.598	.537	.230				20
21	.737	.986	1.059	.934		.636	.511	.205				21
22	.614	.650	.708	.714		.507	.350	.156				22
					α= − 6		δ= −20.0					
1	.827	.700	.757	.721		.543	.743	.735				1
2	.252	.306	.342	.366		.378	.384	.193				2
3	.201	.213	.250	.270		.268	.312	.103				3
4	.193	.179	.209	.237		.262	.272	.044				4
5	.179	.165	.183	.211		.231	.239	−.004				5
6	.155	.155	.173	.191		.207	.223	−.012				6
7	.161	.149	.163	.173		.193	.191	.012				7
8	.141	.121	.121	.147		.159	.177	.107				8
9	.145	.109	.115	.127		.139	.352	.131				9
10	.125	.117		.135		.175	.485	.155				10
11	.121	.127		.137		.449						11
12	.125	.129		.308		.513	.549	.155				12
13	.127	.127	.147	.489		.537	.560	.089				13
14	.133	.123	.457	.529		.549	.557	−.139				14
15	.139	.330	.511	.535		.545	.543	.056				15
16	.229	.411	.505	.521		.531	.539	.432				16
17		.286	.413	.461		.425	.388	−.282				17
18		.483	.511	.539		.545	.547	.193				18
19	.419	.753	.678	.622		.614	.590	.274				19
20	.509	.773	.835	.761		.696	.620	.249				20
21	.527	.721	.811	.795		.729	.608	.199				21
22	.463	.503	.570	.572		.541	.437	.131				22
					α= − 6		δ= −10.0					
1	.827	.698	.753	.710		.533	.727	.721				1
2	.250	.306	.340	.366		.376	.382	.199				2
3	.203	.213	.252	.272		.274	.318	.113				3
4	.193	.175	.209	.235		.260	.282	.054				4
5	.177	.163	.173	.205		.227	.246	−.002				5
6	.155	.153	.165	.187		.201	.223	−.012				6
7	.153	.147	.153	.167		.193	.195	−.030				7
8	.145	.117	.125	.137		.155	.173	−.042				8
9	.135	.103	.113	.119		.139	.161	−.054				9
10	.129	.111		.133		.135	.157	−.076				10
11	.125	.123		.133		.137						11
12	.125	.127		.139		.145	.161	−.064				12
13	.129	.129	.137	.137		.147	.157	−.143				13
14	.129	.123	.129	.129		.149	.151	−.075				14
15	.121	.099	.097	.111		.111	.127	−.029				15
16	.213	.167	.133	.161		.159	.139	.367				16
17		.157	.147	.183		.189	.195	−.241				17
18		.326	.354	.405		.473	.644	.216				18
19	.254	.415	.501	.549		.610	.640	.293				19
20	.290	.392	.471	.527		.580	.547	.214				20
21	.318	.382	.449	.503		.537	.491	.127				21
22	.294	.298	.358	.386		.401	.366	.071				22

Table 9 · Continued

Pressure coefficients on swept wing

Configuration 2 M=1.61 R=1.7 x 10^6

Orif	Station 1	2	3	4	24	5	6	7	8	9	10	Orif
					α=-6	δ=-5.0						
1	.827	.698	.755	.718		.529	.727	.712				1
2	.252	.310	.346	.372		.380	.388	.197				2
3	.205	.221	.252	.274		.274	.316	.109				3
4	.197	.177	.215	.242		.264	.276	.048				4
5	.175	.163	.185	.213		.231	.242	-.002				5
6	.157	.159	.177	.193		.211	.221	-.012				6
7	.155	.149	.161	.171		.189	.193	-.028				7
8	.149	.127	.129	.147		.151	.173	-.040				8
9	.141	.109	.121	.121		.135	.163	-.052				9
10	.131	.115		.137		.133	.155	-.074				10
11	.127	.123		.137		.137						11
12	.131	.129		.143		.141	.157	-.066				12
13	.129	.129	.143	.141		.141	.159	-.137				13
14	.129	.129	.137	.133		.149	.153	-.091				14
15	.125	.097	.101	.105		.087	.105	-.168				15
16	.205	.014	.004	.004		-.020	-.010	.160				16
17		.022	.020	.016		-.006	-.002	-.185				17
18		.270	.282	.280		.290	.322	.095				18
19	.179	.282	.316	.324		.350	.344	.031				19
20	.211	.258	.298	.322		.344	.316	.017				20
21	.211	.239	.288	.308		.336	.292	-.019				21
22	.191	.189	.237	.250		.264	.217	-.033				22
					α=-6	δ=0.0						
1	.821	.702	.755	.727		.527	.727	.706				1
2	.242	.310	.344	.382		.380	.388	.203				2
3	.195	.215	.250	.274		.272	.318	.105				3
4	.185	.173	.209	.235		.264	.274	.042				4
5	.175	.159	.183	.215		.227	.252	-.004				5
6	.155	.155	.171	.191		.207	.227	-.010				6
7	.149	.147	.159	.175		.191	.191	-.034				7
8	.143	.119	.127	.147		.153	.171	-.042				8
9	.131	.107	.119	.119		.133	.163	-.050				9
10	.127	.119		.135		.135	.153	-.068				10
11	.125	.125		.139		.133						11
12	.129	.127		.139		.139	.157	-.070				12
13	.127	.131	.147	.145		.143	.153	-.147				13
14	.127	.129	.139	.129		.149	.155	-.106				14
15	.117	.089	.099	.099		.091	.105	-.214				15
16	.193	-.036	-.026	-.040		-.046	-.052	.122				16
17		-.028	-.034	-.038		-.070	-.048	-.195				17
18		.143	.153	.151		.163	.143	-.006				18
19	.121	.139	.145	.143		.149	.141	-.073				19
20	.133	.133	.145	.143		.153	.125	-.102				20
21	.113	.131	.145	.141		.153	.111	-.102				21
22	.095	.101	.123	.127		.131	.085	-.089				22
					α=-6	δ=5.0						
1	.837	.700	.757	.716		.531	.725	.708				1
2	.254	.308	.344	.370		.384	.378	.209				2
3	.207	.219	.256	.278		.278	.318	.109				3
4	.195	.185	.211	.235		.268	.278	.048				4
5	.181	.165	.189	.209		.231	.250	-.008				5
6	.159	.157	.171	.193		.213	.227	-.014				6
7	.157	.149	.161	.177		.191	.195	-.032				7
8	.149	.125	.129	.143		.151	.177	-.044				8
9	.145	.115	.117	.125		.135	.165	-.050				9
10	.131	.123		.139		.131	.159	-.070				10
11	.135	.125		.137		.145						11
12	.131	.131		.141		.149	.169	-.072				12
13	.135	.135	.143	.141		.149	.161	-.147				13
14	.135	.127	.139	.137		.151	.157	-.114				14
15	.123	.089	.101	.105		.089	.101	-.232				15
16	.187	-.020	-.016	-.030		-.046	-.044	.118				16
17		-.014	-.016	-.024		-.060	-.032	-.195				17
18		.002	.016	.018		.022	.006	-.085				18
19	.056	.008	-.002	.004		.012	.004	-.145				19
20	.060	.014	-.002	.006		.014	-.012	-.158				20
21	.030	.022	.000	.004		.012	-.016	-.147				21
22	-.008	.016	.004	-.008		.006	-.028	-.116				22

Table 9 - Continued

Pressure coefficients on swept wing

Configuration 2 M=1.61 R=1.7 x 10^6

Orif	Station 1	2	3	4	24	5	6	7	8	9	10	Orif
					α= - 6	δ= 10.0						
1	.827	.704	.755	.706		.521	.727	.694				1
2	.252	.310	.346	.368		.382	.396	.203				2
3	.199	.219	.252	.274		.276	.320	.115				3
4	.197	.183	.209	.235		.270	.278	.050				4
5	.179	.165	.181	.205		.235	.248	.002				5
6	.155	.161	.171	.189		.213	.227	-.018				6
7	.153	.149	.161	.173		.195	.201	-.032				7
8	.149	.125	.127	.145		.151	.173	-.042				8
9	.141	.109	.115	.123		.135	.163	-.052				9
10	.125	.117		.135		.131	.157	-.066				10
11	.123	.129		.135		.143						11
12	.125	.129		.143		.143	.161	-.068				12
13	.137	.131	.139	.141		.151	.155	-.147				13
14	.133	.129	.133	.131		.153	.151	-.122				14
15	.121	.095	.099	.099		.091	.103	-.241				15
16	.177	.028	.038	.026		-.014	.008	.112				16
17		.042	.042	.038		.000	.018	-.176				17
18		-.101	-.101	-.095		-.095	-.099	-.170				18
19	-.016	-.109	-.119	-.111		-.111	-.109	-.208				19
20	-.004	-.097	-.117	-.109		-.103	-.119	-.189				20
21	-.050	-.076	-.119	-.111		-.105	-.115	-.172				21
22	-.101	-.072	-.117	-.109		-.101	-.135	-.137				22
					α= - 6	δ= 20.0						
1	.833	.700	.757	.718		.521	.737	.696				1
2	.256	.310	.350	.386		.392	.398	.213				2
3	.203	.215	.256	.286		.286	.328	.121				3
4	.197	.181	.217	.248		.274	.290	.058				4
5	.177	.167	.185	.217		.242	.252	.008				5
6	.155	.161	.173	.197		.221	.237	-.010				6
7	.157	.151	.161	.183		.199	.201	-.032				7
8	.147	.129	.129	.149		.161	.181	-.044				8
9	.137	.113	.123	.131		.147	.173	-.052				9
10	.135	.123		.139		.147	.165	-.060				10
11	.135	.131		.141		.147						11
12	.135	.137		.153		.149	.171	-.064				12
13	.137	.143	.145	.149		.155	.163	-.141				13
14	.137	.131	.133	.141		.161	.165	-.058				14
15	.125	.107	.107	.119		.107	.129	-.075				15
16	.153	.141	.137	.147		.087	.125	.226				16
17		.145	.157	.157		.109	.127	-.046				17
18		-.239	-.244	-.229		-.231	-.231	-.218				18
19	-.123	-.262	-.256	-.244		-.246	-.242	-.212				19
20	-.149	-.256	-.256	-.246		-.233	-.239	-.216				20
21	-.167	-.235	-.258	-.250		-.235	-.244	-.214				21
22	-.189	-.197	-.256	-.252		-.235	-.254	-.197				22
					α= - 6	δ= 30.0						
1	.835	.696	.751	.721		.513	.725	.686				1
2	.252	.304	.344	.374		.386	.394	.211				2
3	.209	.217	.254	.278		.280	.324	.119				3
4	.199	.179	.213	.242		.264	.282	.056				4
5	.183	.163	.197	.215		.244	.248	.004				5
6	.159	.155	.177	.197		.219	.237	.022				6
7	.161	.145	.167	.177		.191	.197	.050				7
8	.147	.127	.131	.147		.151	.177	.064				8
9	.139	.107	.125	.131		.141	.163	.076				9
10	.131	.119		.141		.139	.161	.064				10
11	.129	.125		.141		.145						11
12	.127	.135		.153		.143	.165	.072				12
13	.135	.135	.153	.151		.151	.161	.004				13
14	.133	.131	.145	.143		.155	.159	.120				14
15	.127	.109	.137	.159		.097	.143	.039				15
16	.151	.175	.246	.258		.072	.161	.299				16
17		.183	.258	.274		.093	.167	.054				17
18		-.324	-.330	-.320		-.324	-.322	-.278				18
19	-.217	-.344	-.346	-.336		-.338	-.326	-.295				19
20	-.227	-.344	-.344	-.338		-.332	-.334	-.305				20
21	-.260	-.330	-.346	-.340		-.330	-.314	-.291				21
22	-.286	-.284	-.332	-.330		-.310	-.280	-.257				22

Table 9 · Continued

Pressure coefficients on swept wing

Configuration 2 M=1.61 R=1.7 x 10^6

Orif	Station 1	2	3	4	24	5	6	7	8	9	10	Orif
					α= - 3		δ= 0.0					
1	.835	.692	.753	.731		.684	.718	.823				1
2	.173	.197	.235	.254		.270	.256	.119				2
3	.129	.111	.117	.141		.133	.189	-.004				3
4	.119	.093	.121	.141		.153	.161	.014				4
5	.103	.087	.099	.113		.127	.129	-.004				5
6	.093	.078	.085	.093		.105	.115	-.016				6
7	.087	.068	.083	.085		.097	.095	-.020				7
8	.078	.052	.056	.058		.062	.076	-.032				8
9	.072	.038	.044	.046		.052	.070	-.030				9
10	.056	.044		.050		.048	.060	-.054				10
11	.056	.052		.052		.052						11
12	.060	.060		.058		.052	.066	-.060				12
13	.064	.060	.064	.058		.050	.066	-.129				13
14	.064	.060	.062	.054		.060	.062	.019				14
15	.056	.028	.032	.028		.018	.024	-.125				15
16	.068	-.020	-.028	-.026		-.060	-.040	.187				16
17		-.018	-.014	-.018		-.034	-.024	-.098				17
18		.060	.066	.052		.044	.044	-.029				18
19	.064	.066	.070	.050		.056	.044	-.077				19
20	.074	.068	.068	.062		.058	.030	-.083				20
21	.048	.062	.074	.064		.060	.024	-.095				21
22	.036	.036	.060	.052		.044	.006	-.087				22
					α= 0		δ= -30.0					
1	.851	.731	.741	.692		.702	.612	.845				1
2	.123	.095	.117	.125		.163	.143	.083				2
3	.070	.042	.046	.070		.066	.074	.008				3
4	.058	.028	.026	.022		.030	.038	.093				4
5	.058	.014	.014	.014		.018	.185	.237				5
6	.030	.012	.002	-.004		.006	.386	.205				6
7	.026	.014	.000	-.010		.119	.413	.213				7
8	.022	-.002	-.018	-.022		.376	.419	.205				8
9	.020	-.018	-.024	-.038		.401	.411	.179				9
10	.006	-.014		.318		.392	.401	.173				10
11	.006	-.006		.356		.378						11
12	.002	.002		.362		.358	.370	.139				12
13	.006	.008	.348	.360		.332	.348	.056				13
14	.010	.227	.366	.346		.306	.332	.010				14
15	.022	.364	.360	.330		.278	.296	.095				15
16	.137	.342	.229	.215		.242	.278	.394				16
17		.219	.274	.316		.268	.260	-.019				17
18		.376	.405	.394		.312	.294	.141				18
19	.507	.674	.433	.340		.288	.286	.147				19
20	.594	.982	.882	.523		.358	.286	.118				20
21	.549	.873	1.022	.789		.439	.286	.089				21
22	.491	.590	.658	.706		.431	.197	.062				22
					α= 0		δ= -20.0					
1	.847	.723	.741	.694		.710	.608	.845				1
2	.119	.091	.121	.141		.165	.141	.081				2
3	.064	.042	.048	.078		.068	.074	-.014				3
4	.052	.028	.024	.022		.030	.038	-.004				4
5	.052	.014	.006	.020		.022	.016	.002				5
6	.030	.012	.006	.002		.006	.006	-.002				6
7	.032	.012	.002	-.002		.002	-.010	-.002				7
8	.018	-.002	-.016	-.018		-.028	-.024	-.016				8
9	.012	-.016	-.024	-.032		-.040	-.028	-.006				9
10	.000	-.014		-.026		-.036	-.028	.145				10
11	.002	-.006		-.022		-.034						11
12	.006	.002		-.018		.177	.294	.187				12
13	.004	.006	-.002	.113		.298	.308	.100				13
14	.004	.004	.155	.304		.314	.312	.044				14
15	.004	.147	.300	.336		.314	.304	.100				15
16	.070	.239	.308	.316		.298	.312	.392				16
17		.171	.250	.300		.286	.274	.010				17
18		.292	.314	.322		.308	.298	.143				18
19	.242	.509	.461	.411		.350	.322	.154				19
20	.320	.549	.602	.543		.443	.386	.139				20
21	.332	.525	.634	.630		.517	.423	.133				21
22	.308	.392	.473	.493		.443	.350	.108				22

Table 9 · Continued

Pressure coefficients on swept wing

Configuration 2 M= 1.61 R= 1.7 x 10^6

Orif	Station 1	2	3	4	24	5	6	7	8	9	10	Orif
					α= 0		δ= -10.0					
1	.855	.727	.739	.700		.702	.618	.847				1
2	.123	.105	.123	.143		.175	.153	.076				2
3	.070	.038	.050	.074		.068	.076	-.020				3
4	.052	.032	.030	.034		.034	.042	-.004				4
5	.062	.010	.010	.020		.024	.024	.008				5
6	.038	.010	.010	.002		.016	.010	.002				6
7	.034	.014	.002	.000		.004	-.006	-.004				7
8	.018	-.004	-.016	-.018		-.020	-.018	-.014				8
9	.020	-.020	-.018	-.030		-.034	-.022	-.008				9
10	.014	-.010		-.024		-.032	-.032	-.022				10
11	.010	-.006		-.024		-.030						11
12	.010	.006		-.012		-.026	-.028	-.052				12
13	.010	.008	-.004	-.010		-.024	-.026	-.091				13
14	.008	.006	-.002	-.008		-.018	-.026	.079				14
15	.002	-.010	-.014	-.020		-.020	.018	.054				15
16	.058	.087	.058	.078		.087	.078	.351				16
17		.093	.085	.093		.099	.103	-.066				17
18		.181	.193	.185		.183	.197	.160				18
19	.131	.258	.296	.302		.284	.284	.125				19
20	.165	.260	.298	.322		.320	.300	.095				20
21	.175	.244	.296	.324		.320	.300	.073				21
22	.159	.177	.223	.250		.246	.235	.050				22
					α= 0		δ= - 5.0					
1	.853	.733	.743	.700		.710	.624	.849				1
2	.131	.097	.125	.141		.171	.161	.089				2
3	.072	.042	.052	.070		.070	.081	-.020				3
4	.054	.032	.028	.028		.034	.048	.004				4
5	.054	.012	.012	.020		.022	.026	.014				5
6	.036	.016	.012	-.002		.012	.016	.004				6
7	.030	.018	.002	-.002		.004	.000	.008				7
8	.022	-.004	-.014	-.024		-.014	-.012	-.008				8
9	.020	-.018	-.018	-.032		-.028	-.016	-.004				9
10	.008	-.012		-.022		-.024	-.030	-.026				10
11	.008	-.002		-.024		-.026						11
12	.006	.006		-.012		-.022	-.024	-.042				12
13	.006	.008	-.004	-.014		-.018	-.020	-.079				13
14	.008	.004	.000	-.016		-.004	-.024	.093				14
15	.000	-.022	-.026	-.032		-.038	-.026	-.029				15
16	.048	.008	-.012	-.004		-.024	-.010	.259				16
17		.010	-.002	.002		-.004	.002	-.062				17
18		.101	.091	.081		.066	.060	.031				18
19	.060	.129	.135	.129		.113	.095	.021				19
20	.091	.123	.137	.129		.121	.099	.017				20
21	.081	.109	.137	.139		.123	.101	-.010				21
22	.062	.064	.099	.105		.099	.076	-.023				22
					α= 0		δ= 0.0					
1	.855	.733	.733	.694		.708	.632	.849				1
2	.123	.091	.119	.137		.169	.163	.087				2
3	.068	.040	.044	.072		.072	.083	-.012				3
4	.052	.028	.028	.026		.038	.046	.008				4
5	.052	.014	.012	.018		.024	.030	.014				5
6	.034	.014	.010	.000		.016	.016	.010				6
7	.030	.012	.000	.000		.004	-.002	.006				7
8	.020	-.004	-.016	-.022		-.024	-.012	-.008				8
9	.020	-.022	-.022	-.032		-.036	-.014	.000				9
10	.008	-.014		-.020		-.028	-.032	-.024				10
11	.004	-.008		-.022		-.026						11
12	.002	-.002		-.016		-.024	-.024	-.038				12
13	.010	.008	-.006	-.016		-.020	-.022	-.081				13
14	.012	.000	-.004	-.016		-.014	-.024	.091				14
15	-.006	-.028	-.032	-.036		-.050	-.040	-.062				15
16	.000	-.028	-.042	-.032		-.054	-.036	.228				16
17		-.024	-.026	-.022		-.040	-.032	-.050				17
18		.002	.000	-.008		-.022	-.030	-.031				18
19	.002	.008	.004	-.010		-.012	-.022	-.017				19
20	.024	.016	.006	-.002		-.010	-.024	-.019				20
21	.008	.012	.010	.002		-.008	-.024	-.019				21
22	-.024	-.020	-.004	-.008		-.024	-.036	-.019				22

Table 9 · Continued

Pressure coefficients on swept wing

Configuration 2 M=1.61 R=1.7 x 10^6

Orif	Station 1	2	3	4	24	5	6	7	8	9	10	Orif
					α= 0		δ= 5.0					
1	.855	.733	.745	.700		.706	.634	.851				1
2	.121	.099	.125	.141		.171	.165	.093				2
3	.064	.038	.050	.078		.064	.087	-.022				3
4	.052	.028	.032	.032		.036	.044	.008				4
5	.052	.016	.012	.020		.024	.028	.016				5
6	.032	.014	.004	.004		.010	.024	.008				6
7	.016	.012	.000	.000		.004	.014	.008				7
8	.018	-.002	-.020	-.022		-.018	-.010	-.008				8
9	.018	-.018	-.024	-.036		-.028	-.010	.000				9
10	.004	-.012		-.024		-.030	-.024	-.024				10
11	.000	-.004		-.024		-.028						11
12	.002	.004		-.012		-.018	-.022	-.032				12
13	.004	.008	-.006	-.014		-.016	-.018	-.079				13
14	.008	.002	-.002	-.014		-.004	-.022	.091				14
15	-.002	-.028	-.032	-.032		-.044	-.026	-.060				15
16	-.004	-.004	-.012	.002		-.018	.000	.228				16
17		.016	.008	.012		-.002	.002	-.025				17
18		-.097	-.093	-.101		-.107	-.119	-.098				18
19	-.036	-.093	-.109	-.121		-.117	-.121	-.079				19
20	-.056	-.085	-.105	-.117		-.115	-.127	-.104				20
21	-.076	-.076	-.101	-.113		-.111	-.125	-.108				21
22	-.127	-.091	-.111	-.113		-.121	-.133	-.116				22
					α= 0		δ= 10.0					
1	.849	.729	.737	.708		.714	.626	.847				1
2	.121	.101	.125	.149		.177	.165	.089				2
3	.064	.044	.056	.089		.076	.083	-.018				3
4	.048	.032	.030	.034		.046	.046	.010				4
5	.056	.018	.016	.026		.032	.034	.018				5
6	.030	.012	.012	.004		.016	.018	.002				6
7	.028	.014	.008	.006		.012	.002	.002				7
8	.016	-.002	-.010	-.012		-.022	-.010	-.012				8
9	.016	-.012	-.016	-.028		-.032	-.014	.000				9
10	.014	-.014		-.012		-.028	-.030	-.014				10
11	.012	-.004		-.012		-.026						11
12	.006	.006		-.008		-.022	-.022	-.038				12
13	.010	.008	-.002	-.002		-.018	-.018	-.081				13
14	.014	.008	.000	-.006		-.010	-.018	.089				14
15	-.004	-.022	-.008	-.014		-.020	.020	-.044				15
16	.004	.050	.054	.081		.070	.085	.247				16
17		.089	.089	.105		.099	.105	-.027				17
18		-.185	-.181	-.181		-.195	-.203	-.145				18
19	-.070	-.199	-.201	-.197		-.213	-.215	-.181				19
20	-.153	-.185	-.199	-.197		-.207	-.219	-.210				20
21	-.167	-.165	-.193	-.195		-.207	-.215	-.210				21
22	-.191	-.163	-.197	-.197		-.211	-.219	-.199				22
					α= 0		δ= 20.0					
1	.849	.729	.739	.700		.708	.638	.843				1
2	.121	.101	.125	.143		.175	.167	.087				2
3	.068	.034	.052	.076		.074	.091	-.018				3
4	.050	.034	.032	.036		.044	.054	.008				4
5	.052	.020	.016	.028		.036	.036	.006				5
6	.034	.018	.012	.004		.020	.026	.004				6
7	.030	.014	.008	.004		.008	.008	.006				7
8	.018	-.004	-.014	-.016		-.014	-.008	-.010				8
9	.016	-.016	-.018	-.030		-.024	-.008	.000				9
10	.012	-.006		-.020		-.022	-.028	.014				10
11	.010	.000		-.020		-.020						11
12	.008	.004		-.012		-.016	-.018	-.006				12
13	.010	.010	.000	-.008		-.010	-.020	-.066				13
14	.008	.006	.004	-.012		-.002	-.010	.110				14
15	.006	-.010	.030	.093		.143	.189	.044				15
16	.014	.105	.165	.199		.215	.209	.315				16
17		.123	.215	.256		.268	.248	.073				17
18		-.298	-.310	-.306		-.308	-.318	-.218				18
19	-.223	-.318	-.322	-.322		-.328	-.328	-.235				19
20	-.254	-.318	-.326	-.322		-.322	-.330	-.276				20
21	-.239	-.302	-.322	-.320		-.322	-.328	-.307				21
22	-.258	-.266	-.320	-.322		-.312	-.314	-.309				22

Table 9 · Continued

Pressure coefficients on swept wing

Configuration 2 M= 1.61 R=1.7 x 10^6

Orif	Station 1	2	3	4	24	5	6	7	8	9	10	Orif
					α= 0		δ= 30.0					
1	.853	.729	.739	.704		.712	.640	.855				1
2	.125	.107	.129	.153		.181	.173	.089				2
3	.068	.044	.052	.083		.076	.091	-.020				3
4	.058	.032	.034	.042		.048	.058	.012				4
5	.052	.018	.020	.030		.036	.040	.044				5
6	.034	.016	.016	.008		.024	.028	.056				6
7	.032	.018	.008	.012		.014	.008	.093				7
8	.012	.000	-.008	-.006		-.016	-.004	.056				8
9	.012	-.012	-.016	-.024		-.020	-.008	.070				9
10	.008	-.008		-.014		-.020	-.024	.064				10
11	.010	-.002		-.010		-.020						11
12	.010	.008		-.004		-.018	-.020	.050				12
13	.010	.010	.004	-.008		-.014	-.014	-.004				13
14	.012	.008	.006	-.004		.000	-.004	.189				14
15	.008	.008	.076	.159		.171	.205	.004				15
16	.012	.143	.195	.233		.229	.225	.288				16
17		.115	.175	.213		.229	.219	.050				17
18		-.378	-.384	-.378		-.392	-.392	-.328				18
19	-.290	-.398	-.401	-.390		-.409	-.382	-.318				19
20	-.282	-.398	-.401	-.398		-.401	-.364	-.355				20
21	-.322	-.382	-.403	-.394		-.390	-.338	-.371				21
22	-.346	-.316	-.334	-.350		-.338	-.306	-.357				22
					α= 3		δ= 0.0					
1	.869	.684	.714	.648		.745	.451	.865				1
2	.066	-.028	-.038	-.036		-.040	-.044	-.030				2
3	-.008	-.036	-.040	-.032		-.036	-.040	-.020				3
4	.004	-.054	-.062	-.064		-.068	-.060	-.056				4
5	-.002	-.052	-.066	-.074		-.081	-.070	-.052				5
6	-.020	-.048	-.076	-.085		-.085	-.083	-.060				6
7	-.022	-.048	-.074	-.085		-.093	-.097	-.068				7
8	-.034	-.058	-.087	-.101		-.109	-.107	-.078				8
9	-.036	-.074	-.083	-.113		-.115	-.109	-.068				9
10	-.044	-.068		-.105		-.117	-.119	-.087				10
11	-.044	-.062		-.101		-.115						11
12	-.044	-.054		-.083		-.109	-.109	-.127				12
13	-.046	-.044	-.068	-.076		-.109	-.109	-.176				13
14	-.046	-.048	-.064	-.081		-.101	-.111	-.031				14
15	-.056	-.078	-.083	-.097		-.127	-.099	-.122				15
16	-.052	-.042	-.052	-.044		-.078	-.054	.185				16
17		-.022	-.036	-.032		-.052	-.036	-.100				17
18		-.044	-.046	-.064		-.087	-.109	-.120				18
19	-.038	-.034	-.048	-.056		-.081	-.097	-.104				19
20	-.004	-.028	-.040	-.056		-.070	-.089	-.108				20
21	-.032	-.024	-.036	-.056		-.068	-.078	-.116				21
22	-.074	-.042	-.046	-.060		-.076	-.087	-.114				22
					α= 6		δ= -30.0					
1	.877	.614	.630	.539		.757	.302	.930				1
2	.020	-.123	-.137	-.153		-.161	-.173	-.151				2
3	-.054	-.117	-.139	-.141		-.147	-.165	-.145				3
4	-.040	-.119	-.153	-.159		-.163	-.171	-.157				4
5	-.044	-.109	-.161	-.167		-.169	-.135	-.107				5
6	-.068	-.101	-.157	-.173		-.173	-.008	-.006				6
7	-.070	-.097	-.137	-.173		-.167	.177	.054				7
8	-.078	-.105	-.143	-.181		.036	.183	.064				8
9	-.081	-.119	-.141	-.193		.123	.199	.044				9
10	-.091	-.115		-.161		.139	.209	.038				10
11	-.089	-.109		.129		.139						11
12	-.085	-.101		.151		.135	.187	.040				12
13	-.101	-.097	.169	.165		.125	.169	-.037				13
14	-.085	-.022	.213	.171		.109	.149	.064				14
15	-.083	.211	.225	.159		.076	.125	.093				15
16	.022	.209	.139	.076		.028	.121	.380				16
17		.201	.272	.306		.155	.211	.044				17
18		.225	.258	.237		.131	.133	.102				18
19	.302	.481	.290	.175		.085	.141	.127				19
20	.401	.749	.580	.322		.117	.131	.135				20
21	.374	.725	.882	.545		.169	.119	.135				21
22	.350	.513	.612	.618		.163	.012	.166				22

Table 9 · Continued

Pressure coefficients on swept wing

Configuration 2 M= 1.61 R= 1.7 x 10^6

Orif	Station 1	2	3	4	24	5	6	7	8	9	10	Orif
					α= 6		δ= -20.0					
1	.869	.612	.626	.539		.751	.306	.918				1
2	.016	-.125	-.137	-.153		-.161	-.167	-.143				2
3	-.054	-.123	-.147	-.141		-.149	-.161	-.137				3
4	-.050	-.121	-.155	-.159		-.163	-.169	-.153				4
5	-.050	-.111	-.161	-.167		-.169	-.175	-.147				5
6	-.070	-.099	-.157	-.175		-.171	-.177	-.155				6
7	-.074	-.097	-.139	-.177		-.177	-.189	-.173				7
8	-.083	-.113	-.141	-.185		-.191	-.193	-.217				8
9	-.085	-.121	-.145	-.197		-.193	-.193	-.258				9
10	-.089	-.115		-.185		-.193	-.181	-.280				10
11	-.091	-.111		-.177		-.193						11
12	-.087	-.103		-.159		-.058	.066	-.231				12
13	-.099	-.097	-.111	-.099		.099	.113	-.259				13
14	-.095	-.099	.010	.127		.117	.121	-.098				14
15	-.085	.087	.155	.153		.125	.127	-.039				15
16	-.014	.135	.165	.149		.117	.123	.274				16
17		.125	.163	.185		.141	.159	-.046				17
18		.151	.169	.155		.131	.135	-.079				18
19	.123	.324	.286	.207		.115	.159	-.039				19
20	.195	.394	.411	.326		.153	.177	-.046				20
21	.203	.384	.467	.415		.197	.173	-.046				21
22	.187	.290	.374	.364		.173	.089	-.012				22
					α= 6		δ= -10.0					
1	.875	.620	.632	.551		.757	.318	.914				1
2	.014	-.119	-.131	-.145		-.151	-.155	-.131				2
3	-.054	-.115	-.131	-.135		-.141	-.149	-.123				3
4	-.036	-.117	-.149	-.153		-.157	-.161	-.143				4
5	-.044	-.101	-.151	-.161		-.157	-.163	-.147				5
6	-.060	-.093	-.151	-.169		-.163	-.167	-.149				6
7	-.066	-.095	-.133	-.175		-.169	-.181	-.161				7
8	-.074	-.107	-.141	-.181		-.183	-.185	-.205				8
9	-.078	-.117	-.133	-.193		-.191	-.185	-.237				9
10	-.085	-.117		-.179		-.187	-.185	-.272				10
11	-.089	-.107		-.165		-.185						11
12	-.083	-.097		-.153		-.185	-.187	-.282				12
13	-.093	-.095	-.111	-.141		-.183	-.179	-.342				13
14	-.085	-.095	-.109	-.131		-.175	-.185	-.235				14
15	-.089	-.103	-.097	-.099		-.121	-.095	-.249				15
16	-.030	.016	.026	.024		-.012	-.014	.131				16
17		.034	.036	.030		.008	.012	-.214				17
18		.064	.068	.044		.004	-.012	-.189				18
19	.022	.121	.129	.105		.046	.026	-.216				19
20	.044	.125	.149	.129		.074	.068	-.197				20
21	.054	.119	.155	.143		.093	.081	-.189				21
22	.044	.068	.109	.109		.052	.056	-.178				22
					α= 6		δ= - 5.0					
1	.884	.624	.642	.555		.753	.324	.906				1
2	.026	-.105	-.127	-.143		-.147	-.151	-.127				2
3	-.042	-.105	-.123	-.131		-.139	-.143	-.117				3
4	-.036	-.109	-.139	-.149		-.153	-.151	-.141				4
5	-.040	-.099	-.155	-.157		-.155	-.159	-.143				5
6	-.060	-.093	-.147	-.165		-.159	-.165	-.149				6
7	-.062	-.085	-.135	-.169		-.167	-.175	-.157				7
8	-.070	-.101	-.135	-.173		-.177	-.177	-.193				8
9	-.074	-.107	-.131	-.187		-.187	-.183	-.231				9
10	-.078	-.103		-.175		-.185	-.187	-.260				10
11	-.081	-.101		-.163		-.183						11
12	-.081	-.087		-.147		-.183	-.185	-.280				12
13	-.087	-.083	-.111	-.135		-.179	-.179	-.344				13
14	-.081	-.085	-.113	-.129		-.171	-.181	-.239				14
15	-.087	-.107	-.115	-.129		-.169	-.135	-.272				15
16	-.030	-.040	-.052	-.050		-.085	-.068	.118				16
17		-.016	-.028	-.030		-.054	-.044	-.232				17
18		-.004	-.010	-.042		-.087	-.117	-.266				18
19	-.020	.016	.008	-.020		-.064	-.103	-.282				19
20	.004	.020	.012	-.008		-.050	-.074	-.270				20
21	-.004	.014	.022	-.002		-.042	-.066	-.278				21
22	-.034	-.016	-.006	-.012		-.058	-.066	-.259				22

Table 9 - Continued

Pressure coefficients on swept wing

Configuration 2 M=1.61 R=1.7 x 10^6

Orif	Station 1	2	3	4	24	5	6	7	8	9	10	Orif
					α= 6		δ= 0.0					
1	.873	.626	.630	.551		.749	.320	.890				1
2	.022	-.111	-.125	-.151		-.155	-.157	-.125				2
3	-.048	-.109	-.129	-.141		-.139	-.145	-.109				3
4	-.040	-.113	-.149	-.153		-.157	-.147	-.139				4
5	-.040	-.105	-.159	-.163		-.157	-.157	-.137				5
6	-.056	-.095	-.157	-.169		-.163	-.163	-.139				6
7	-.066	-.089	-.141	-.169		-.173	-.173	-.147				7
8	-.081	-.101	-.143	-.177		-.177	-.177	-.177				8
9	-.081	-.117	-.139	-.193		-.191	-.181	-.209				9
10	-.087	-.105		-.181		-.187	-.181	-.248				10
11	-.089	-.101		-.171		-.181						11
12	-.085	-.093		-.153		-.181	-.179	-.258				12
13	-.087	-.087	-.117	-.145		-.179	-.179	-.313				13
14	-.085	-.089	-.111	-.141		-.171	-.177	-.208				14
15	-.087	-.113	-.121	-.139		-.181	-.141	-.237				15
16	-.046	-.060	-.070	-.062		-.103	-.072	.114				16
17		-.030	-.038	-.044		-.066	-.048	-.210				17
18		-.070	-.083	-.105		-.149	-.165	-.239				18
19	-.064	-.072	-.089	-.111		-.147	-.165	-.249				19
20	-.036	-.066	-.081	-.107		-.135	-.149	-.259				20
21	-.072	-.064	-.081	-.101		-.125	-.145	-.259				21
22	-.105	-.081	-.097	-.107		-.129	-.131	-.249				22
					α= 6		δ= 5.0					
1	.873	.618	.638	.555		.755	.322	.898				1
2	.022	-.111	-.125	-.141		-.151	-.155	-.125				2
3	-.054	-.115	-.125	-.135		-.139	-.147	-.113				3
4	-.038	-.111	-.143	-.155		-.153	-.151	-.143				4
5	-.040	-.103	-.155	-.159		-.159	-.165	-.141				5
6	-.062	-.095	-.151	-.167		-.165	-.169	-.147				6
7	-.062	-.095	-.135	-.167		-.169	-.183	-.149				7
8	-.083	-.107	-.139	-.173		-.181	-.183	-.185				8
9	-.076	-.115	-.139	-.193		-.191	-.183	-.215				9
10	-.085	-.103		-.179		-.187	-.191	-.256				10
11	-.089	-.101		-.167		-.187						11
12	-.085	-.097		-.151		-.183	-.187	-.272				12
13	-.091	-.091	-.115	-.139		-.183	-.185	-.326				13
14	-.087	-.091	-.109	-.135		-.177	-.183	-.218				14
15	-.093	-.111	-.109	-.123		-.159	-.119	-.247				15
16	-.050	-.030	-.018	-.010		-.050	-.036	.122				16
17		.022	.024	.020		-.002	.000	-.241				17
18		-.171	-.169	-.189		-.227	-.244	-.293				18
19	-.117	-.179	-.185	-.205		-.239	-.252	-.295				19
20	-.151	-.169	-.187	-.199		-.227	-.244	-.315				20
21	-.159	-.147	-.181	-.195		-.223	-.231	-.334				21
22	-.187	-.159	-.187	-.197		-.219	-.231	-.324				22
					α= 6		δ= 10.0					
1	.875	.618	.632	.551		.749	.326	.888				1
2	.028	-.119	-.137	-.147		-.153	-.159	-.127				2
3	-.050	-.113	-.133	-.133		-.145	-.149	-.113				3
4	-.042	-.115	-.143	-.149		-.155	-.161	-.147				4
5	-.036	-.109	-.151	-.165		-.161	-.167	-.145				5
6	-.066	-.099	-.153	-.169		-.167	-.171	-.151				6
7	-.066	-.095	-.139	-.167		-.171	-.181	-.155				7
8	-.078	-.109	-.147	-.181		-.185	-.189	-.187				8
9	-.081	-.119	-.139	-.193		-.193	-.185	-.213				9
10	-.085	-.113		-.181		-.189	-.195	-.252				10
11	-.091	-.105		-.169		-.191						11
12	-.091	-.099		-.157		-.185	-.187	-.280				12
13	-.093	-.095	-.117	-.143		-.185	-.183	-.320				13
14	-.091	-.095	-.113	-.135		-.179	-.189	-.210				14
15	-.093	-.103	-.097	-.052		-.060	.008	-.201				15
16	-.044	-.004	.030	.052		.016	.042	.164				16
17		.089	.137	.171		.165	.161	-.222				17
18		-.246	-.248	-.250		-.292	-.306	-.307				18
19	-.183	-.258	-.264	-.270		-.294	-.310	-.305				19
20	-.227	-.250	-.264	-.272		-.290	-.304	-.359				20
21	-.235	-.229	-.258	-.266		-.286	-.298	-.376				21
22	-.250	-.211	-.256	-.270		-.284	-.294	-.359				22

Table 9 - Continued

Pressure coefficients on swept wing

Configuration 2 M=1.61 R=1.7 x 10^6

Orif	Station 1	2	3	4	24	5	6	7	8	9	10	Orif
					α= 6		δ= 20.0					
1	.873	.620	.634	.555		.757	.328	.886				1
2	.022	-.115	-.129	-.141		-.143	-.153	-.125				2
3	-.054	-.113	-.129	-.125		-.133	-.145	-.103				3
4	-.036	-.111	-.147	-.147		-.149	-.157	-.141				4
5	-.042	-.105	-.153	-.153		-.149	-.159	-.141				5
6	-.060	-.095	-.149	-.161		-.159	-.163	-.147				6
7	-.064	-.091	-.133	-.167		-.155	-.177	-.143				7
8	-.081	-.101	-.137	-.173		-.185	-.181	-.167				8
9	-.078	-.115	-.133	-.189		-.191	-.181	-.183				9
10	-.089	-.109		-.177		-.193	-.185	-.211				10
11	-.091	-.105		-.165		-.189						11
12	-.087	-.101		-.147		-.185	-.183	-.262				12
13	-.089	-.093	-.107	-.135		-.183	-.179	-.340				13
14	-.087	-.091	-.101	-.127		-.173	-.177	-.266				14
15	-.085	-.093	-.018	.030		.014	.060	-.299				15
16	-.038	.046	.091	.093		.054	.081	.093				16
17		.064	.177	.229		.294	.272	-.299				17
18		-.340	-.346	-.340		-.378	-.382	-.365				18
19	-.286	-.354	-.356	-.356		-.378	-.380	-.365				19
20	-.310	-.358	-.354	-.358		-.372	-.376	-.411				20
21	-.284	-.344	-.354	-.356		-.368	-.374	-.407				21
22	-.306	-.294	-.334	-.348		-.356	-.356	-.390				22
					α= 6		δ= 30.0					
1	.877	.626	.642	.560		.753	.340	1.006				1
2	.020	-.111	-.123	-.137		-.139	-.137	-.125				2
3	-.052	-.107	-.125	-.125		-.129	-.131	-.117				3
4	-.038	-.109	-.145	-.145		-.145	-.147	-.103				4
5	-.038	-.097	-.151	-.155		-.147	-.153	-.095				5
6	-.058	-.091	-.145	-.157		-.155	-.157	-.119				6
7	-.060	-.085	-.133	-.161		-.155	-.169	-.153				7
8	-.078	-.099	-.137	-.171		-.173	-.173	-.201				8
9	-.076	-.111	-.133	-.185		-.181	-.175	-.233				9
10	-.083	-.111		-.175		-.181	-.179	-.254				10
11	-.083	-.097		-.161		-.181						11
12	-.081	-.091		-.149		-.175	-.171	-.320				12
13	-.083	-.089	-.109	-.135		-.175	-.167	-.388				13
14	-.083	-.091	-.111	-.129		-.163	-.165	-.324				14
15	-.081	-.076	-.004	.050		.032	.074	-.338				15
16	-.036	.066	.093	.101		.066	.095	.091				16
17		-.004	.024	-.030		.012	.064	-.322				17
18		-.394	-.407	-.390		-.415	-.370	-.398				18
19	-.318	-.409	-.413	-.409		-.415	-.370	-.401				19
20	-.306	-.407	-.415	-.403		-.388	-.356	-.425				20
21	-.346	-.386	-.407	-.374		-.370	-.350	-.421				21
22	-.368	-.330	-.330	-.346		-.354	-.340	-.388				22
					α= 9		δ= 0.0					
1	.918	.405	.417	.346		.714	.123	.952				1
2	-.060	-.227	-.244	-.264		-.276	-.296	-.316				2
3	-.121	-.223	-.244	-.254		-.260	-.278	-.286				3
4	-.101	-.221	-.252	-.260		-.262	-.274	-.322				4
5	-.101	-.207	-.258	-.264		-.264	-.274	-.396				5
6	-.121	-.173	-.258	-.266		-.268	-.272	-.401				6
7	-.123	-.157	-.264	-.272		-.270	-.278	-.394				7
8	-.137	-.165	-.258	-.278		-.276	-.276	-.390				8
9	-.137	-.173	-.250	-.280		-.280	-.276	-.378				9
10	-.139	-.169		-.276		-.274	-.276	-.366				10
11	-.143	-.165		-.276		-.272						11
12	-.141	-.161		-.270		-.264	-.270	-.376				12
13	-.143	-.147	-.179	-.266		-.268	-.256	-.444				13
14	-.139	-.149	-.173	-.254		-.264	-.242	-.357				14
15	-.141	-.169	-.179	-.231		-.250	-.227	-.365				15
16	-.155	-.097	-.107	-.183		-.183	-.221	.054				16
17		-.040	-.062	-.085		-.121	-.103	-.266				17
18		-.137	-.139	-.213		-.246	-.252	-.363				18
19	-.087	-.137	-.149	-.203		-.252	-.252	-.367				19
20	-.115	-.127	-.137	-.179		-.246	-.239	-.371				20
21	-.133	-.117	-.137	-.163		-.242	-.235	-.363				21
22	-.153	-.135	-.143	-.165		-.246	-.229	-.334				22

Table 9 Continued

Pressure coefficients on swept wing

Configuration 2 M=1.61 R=1.7 x 10^6

Orif	Station 1	2	3	4	24	5	6	7	8	9	10	Orif
					α= 12		δ= -30.0					
1	.934	.231	.173	.163		.590	-.062	.817				1
2	-.087	-.300	-.316	-.352		-.376	-.398	-.459				2
3	-.163	-.290	-.312	-.332		-.352	-.372	-.461				3
4	-.143	-.284	-.316	-.328		-.344	-.360	-.469				4
5	-.149	-.278	-.316	-.332		-.342	-.336	-.471				5
6	-.161	-.260	-.320	-.326		-.328	-.304	-.473				6
7	-.163	-.209	-.316	-.306		-.306	-.262	-.465				7
8	-.173	-.195	-.304	-.302		-.248	-.201	-.453				8
9	-.179	-.207	-.296	-.290		-.161	-.163	-.431				9
10	-.183	-.199		-.250		-.078	-.127	-.403				10
11	-.183	-.201		-.203		-.022						11
12	-.179	-.191		-.155		.006	-.074	-.340				12
13	-.183	-.187	-.252	-.115		.012	-.036	-.436				13
14	-.179	-.060	-.175	-.091		.008	-.010	-.309				14
15	-.169	.115	.060	-.097		-.022	-.018	-.293				15
16	-.074	.131	.078	-.127		-.028	-.034	.122				16
17		.135	.167	-.016		-.044	.072	-.104				17
18		.151	.131	-.010		.026	.042	-.322				18
19	.123	.276	.469	-.066		.032	.062	-.369				19
20	.248	.437	.564	-.020		.020	.078	-.351				20
21	.231	.483	.543	.042		.002	.076	-.340				21
22	.199	.348	.348	.024		-.076	.014	-.328				22
					α= 12		δ= -20.0					
1	.940	.231	.167	.163		.594	-.062	.821				1
2	-.085	-.304	-.316	-.354		-.378	-.401	-.473				2
3	-.153	-.290	-.314	-.334		-.358	-.376	-.477				3
4	-.137	-.286	-.320	-.332		-.348	-.362	-.479				4
5	-.139	-.280	-.316	-.332		-.348	-.358	-.483				5
6	-.159	-.262	-.318	-.332		-.344	-.354	-.485				6
7	-.159	-.205	-.318	-.332		-.342	-.354	-.481				7
8	-.173	-.197	-.310	-.322		-.336	-.352	-.477				8
9	-.175	-.209	-.302	-.310		-.332	-.344	-.471				9
10	-.175	-.201		-.304		-.316	-.340	-.465				10
11	-.179	-.199		-.302		-.280						11
12	-.175	-.195		-.290		-.248	-.308	-.467				12
13	-.183	-.187	-.292	-.242		-.197	-.280	-.542				13
14	-.175	-.187	-.266	-.199		-.137	-.242	-.444				14
15	-.179	-.010	-.076	-.151		-.095	-.111	-.432				15
16	-.151	.054	.016	-.159		-.087	-.091	.062				16
17		.074	.046	-.034		-.103	-.044	-.120				17
18		.066	.046	-.119		-.042	-.032	-.442				18
19	.028	.161	.310	-.117		.008	.095	-.428				19
20	.054	.217	.322	-.054		.022	.131	-.407				20
21	.083	.215	.304	-.008		.006	.119	-.405				21
22	.087	.135	.221	-.054		-.054	.068	-.378				22
					α= 12		δ= -10.0					
1	.936	.231	.171	.161		.594	-.056	.829				1
2	-.087	-.296	-.324	-.352		-.378	-.405	-.467				2
3	-.165	-.286	-.318	-.330		-.358	-.380	-.473				3
4	-.145	-.288	-.318	-.334		-.350	-.366	-.475				4
5	-.149	-.280	-.326	-.332		-.344	-.362	-.483				5
6	-.159	-.258	-.320	-.332		-.348	-.354	-.487				6
7	-.161	-.209	-.318	-.334		-.346	-.354	-.487				7
8	-.173	-.199	-.318	-.338		-.350	-.354	-.471				8
9	-.175	-.211	-.306	-.342		-.348	-.354	-.467				9
10	-.175	-.201		-.324		-.346	-.348	-.461				10
11	-.177	-.201		-.322		-.344						11
12	-.177	-.193		-.310		-.340	-.328	-.465				12
13	-.181	-.189	-.292	-.310		-.330	-.312	-.560				13
14	-.177	-.191	-.264	-.296		-.314	-.314	-.469				14
15	-.177	-.189	-.225	-.278		-.294	-.294	-.459				15
16	-.165	-.062	-.117	-.256		-.242	-.282	.046				16
17		-.008	-.060	-.095		-.149	-.117	-.166				17
18		-.044	-.042	-.244		-.229	-.262	-.473				18
19	-.050	-.006	.036	-.191		-.201	-.215	-.469				19
20	-.036	.008	.040	-.135		-.169	-.181	-.469				20
21	-.034	.002	.032	-.109		-.161	-.165	-.469				21
22	-.052	-.038	.008	-.117		-.163	-.167	-.446				22

Table 9 · Continued

Pressure coefficients on swept wing

Configuration 2 M= 1.61 R=1.7 x 10^6

Orif	Station 1	2	3	4	24	5	6	7	8	9	10	Orif
					α= 12		δ= - 5.0					
1	.940	.235	.173	.165		.600	-.058	.825				1
2	-.087	-.304	-.322	-.358		-.374	-.413	-.479				2
3	-.159	-.288	-.316	-.330		-.354	-.382	-.481				3
4	-.135	-.286	-.316	-.332		-.346	-.370	-.479				4
5	-.139	-.278	-.324	-.326		-.344	-.364	-.491				5
6	-.157	-.258	-.326	-.334		-.344	-.360	-.491				6
7	-.159	-.205	-.318	-.336		-.344	-.358	-.483				7
8	-.173	-.195	-.320	-.342		-.346	-.358	-.481				8
9	-.173	-.203	-.312	-.338		-.344	-.358	-.475				9
10	-.171	-.197		-.334		-.346	-.356	-.477				10
11	-.175	-.195		-.326		-.342						11
12	-.171	-.193		-.318		-.340	-.334	-.475				12
13	-.171	-.185	-.298	-.304		-.338	-.320	-.564				13
14	-.173	-.187	-.268	-.300		-.322	-.314	-.477				14
15	-.179	-.197	-.233	-.290		-.310	-.292	-.473				15
16	-.167	-.097	-.139	-.286		-.272	-.300	.039				16
17		-.022	-.070	-.089		-.117	-.113	-.174				17
18		-.117	-.109	-.278		-.278	-.314	-.477				18
19	-.095	-.097	-.093	-.270		-.280	-.292	-.477				19
20	-.095	-.095	-.095	-.242		-.278	-.274	-.484				20
21	-.111	-.103	-.087	-.209		-.276	-.266	-.481				21
22	-.133	-.123	-.107	-.201		-.276	-.260	-.459				22
					α= 12		δ= 0.0					
1	.932	.268	.213	.195		.632	-.010	.849				1
2	-.081	-.286	-.298	-.326		-.338	-.364	-.407				2
3	-.155	-.276	-.292	-.306		-.318	-.344	-.411				3
4	-.133	-.272	-.302	-.306		-.316	-.326	-.419				4
5	-.135	-.264	-.310	-.310		-.310	-.328	-.449				5
6	-.155	-.239	-.308	-.312		-.312	-.328	-.455				6
7	-.155	-.195	-.304	-.310		-.312	-.332	-.435				7
8	-.177	-.189	-.296	-.314		-.318	-.326	-.435				8
9	-.171	-.197	-.292	-.318		-.318	-.324	-.431				9
10	-.171	-.195		-.314		-.316	-.324	-.421				10
11	-.175	-.193		-.306		-.314						11
12	-.173	-.183		-.298		-.314	-.310	-.427				12
13	-.175	-.175	-.268	-.288		-.308	-.298	-.504				13
14	-.171	-.179	-.225	-.282		-.302	-.294	-.421				14
15	-.173	-.191	-.197	-.278		-.286	-.284	-.423				15
16	-.167	-.103	-.113	-.270		-.246	-.278	.046				16
17		-.010	-.052	-.060		-.109	-.095	-.185				17
18		-.169	-.161	-.276		-.288	-.298	-.421				18
19	-.139	-.165	-.165	-.272		-.296	-.292	-.423				19
20	-.147	-.157	-.165	-.256		-.288	-.282	-.432				20
21	-.151	-.151	-.165	-.235		-.294	-.280	-.423				21
22	-.187	-.167	-.169	-.221		-.294	-.270	-.396				22
					α=		δ=					

Table 9 - Continued

Pressure coefficients on swept wing

Configuration 2 M= 1.61 R= 1.7 x 10^6

Orif	Station 1	2	3	4	24	5	6	7	8	9	10	Orif
					α= 12		δ= 10.0					
1	.932	.264	.215	.203		.634	-.006	.847				1
2	-.081	-.290	-.300	-.328		-.348	-.384	-.445				2
3	-.155	-.274	-.298	-.312		-.326	-.354	-.455				3
4	-.127	-.272	-.302	-.312		-.324	-.342	-.461				4
5	-.133	-.264	-.308	-.318		-.322	-.338	-.475				5
6	-.155	-.239	-.308	-.318		-.322	-.338	-.469				6
7	-.151	-.201	-.304	-.314		-.322	-.334	-.469				7
8	-.169	-.189	-.304	-.322		-.322	-.338	-.469				8
9	-.167	-.195	-.292	-.330		-.324	-.336	-.455				9
10	-.167	-.193		-.316		-.328	-.336	-.441				10
11	-.171	-.191		-.308		-.326						11
12	-.171	-.185		-.300		-.324	-.306	-.453				12
13	-.171	-.179	-.272	-.292		-.308	-.300	-.533				13
14	-.167	-.179	-.223	-.282		-.296	-.296	-.444				14
15	-.163	-.185	-.179	-.270		-.256	-.252	-.446				15
16	-.127	-.058	-.002	-.256		-.177	-.207	.044				16
17		.244	.459	.582		.608	.501	-.330				17
18		-.302	-.300	-.356		-.352	-.403	-.450				18
19	-.235	-.308	-.318	-.368		-.382	-.370	-.457				19
20	-.288	-.302	-.318	-.360		-.374	-.372	-.467				20
21	-.294	-.288	-.314	-.356		-.378	-.368	-.459				21
22	-.304	-.260	-.314	-.330		-.360	-.366	-.436				22
					α= 12		δ= 20.0					
1	.932	.272	.221	.203		.632	-.020	.747				1
2	-.072	-.276	-.296	-.326		-.342	-.372	-.457				2
3	-.141	-.268	-.294	-.310		-.324	-.346	-.471				3
4	-.123	-.268	-.300	-.310		-.322	-.332	-.475				4
5	-.127	-.256	-.306	-.304		-.318	-.328	-.479				5
6	-.141	-.235	-.306	-.306		-.318	-.328	-.481				6
7	-.139	-.189	-.306	-.312		-.316	-.328	-.473				7
8	-.157	-.185	-.300	-.314		-.324	-.332	-.469				8
9	-.157	-.191	-.290	-.318		-.328	-.330	-.465				9
10	-.161	-.189		-.314		-.326	-.328	-.467				10
11	-.163	-.181		-.304		-.324						11
12	-.163	-.175		-.294		-.312	-.302	-.473				12
13	-.161	-.171	-.262	-.284		-.298	-.286	-.544				13
14	-.159	-.171	-.213	-.278		-.286	-.270	-.459				14
15	-.153	-.161	-.145	-.254		-.225	-.161	-.457				15
16	-.103	-.036	.032	-.225		-.141	-.127	.046				16
17		-.024	.097	.173		.463	.423	-.386				17
18		-.384	-.382	-.411		-.417	-.441	-.465				18
19	-.304	-.396	-.403	-.417		-.431	-.419	-.465				19
20	-.354	-.396	-.401	-.423		-.425	-.419	-.473				20
21	-.312	-.382	-.405	-.425		-.419	-.419	-.465				21
22	-.346	-.294	-.364	-.342		-.364	-.403	-.440				22
					α= 12		δ= 30.0					
1	.928	.268	.219	.213		.640	-.217	.576				1
2	-.076	-.290	-.304	-.328		-.348	-.421	-.475				2
3	-.145	-.276	-.302	-.310		-.332	-.398	-.477				3
4	-.127	-.274	-.304	-.312		-.322	-.372	-.479				4
5	-.133	-.266	-.306	-.312		-.322	-.360	-.485				5
6	-.151	-.244	-.308	-.314		-.324	-.356	-.485				6
7	-.151	-.195	-.302	-.318		-.320	-.348	-.481				7
8	-.173	-.191	-.300	-.324		-.328	-.344	-.479				8
9	-.167	-.205	-.292	-.324		-.328	-.344	-.473				9
10	-.167	-.195		-.314		-.324	-.334	-.473				10
11	-.171	-.193		-.306		-.320						11
12	-.173	-.183		-.292		-.316	-.320	-.475				12
13	-.171	-.177	-.260	-.290		-.308	-.312	-.560				13
14	-.173	-.177	-.209	-.280		-.286	-.304	-.473				14
15	-.169	-.147	-.123	-.254		-.193	-.074	-.467				15
16	-.119	-.022	.040	-.225		-.107	-.046	.039				16
17		-.169	-.085	-.308		-.091	.068	-.446				17
18		-.427	-.425	-.449		-.405	-.409	-.475				18
19	-.340	-.437	-.445	-.433		-.401	-.396	-.475				19
20	-.338	-.435	-.435	-.413		-.398	-.392	-.477				20
21	-.370	-.415	-.411	-.405		-.398	-.396	-.479				21
22	-.398	-.346	-.358	-.370		-.370	-.392	-.461				22

Table 9 Concluded

Pressure coefficients on swept wing

Configuration 2 M= 1.61 R=1.7 x 10^6

Orif	Station 1	2	3	4	24	5	6	7	8	9	10	Orif
					α= 15		δ= 0.0					
1	.968	.074	-.087	-.089		.356	-.262	.598				1
2	-.109	-.364	-.382	-.425		-.429	-.441	-.471				2
3	-.193	-.336	-.376	-.409		-.415	-.427	-.473				3
4	-.171	-.332	-.372	-.396		-.405	-.409	-.477				4
5	-.169	-.332	-.380	-.386		-.398	-.401	-.479				5
6	-.187	-.326	-.366	-.386		-.396	-.396	-.481				6
7	-.187	-.300	-.362	-.382		-.394	-.390	-.471				7
8	-.207	-.217	-.364	-.380		-.386	-.374	-.467				8
9	-.205	-.233	-.358	-.378		-.378	-.370	-.465				9
10	-.201	-.229		-.376		-.368	-.362	-.459				10
11	-.205	-.223		-.368		-.362						11
12	-.207	-.221		-.364		-.350	-.348	-.449				12
13	-.209	-.215	-.334	-.360		-.342	-.354	-.515				13
14	-.203	-.211	-.306	-.344		-.342	-.344	-.421				14
15	-.201	-.215	-.258	-.330		-.334	-.296	-.407				15
16	-.181	-.113	-.165	-.328		-.318	-.280	.042				16
17		.133	.127	.133		.147	.109	-.091				17
18		-.201	-.237	-.332		-.362	-.356	-.413				18
19	-.157	-.201	-.233	-.332		-.342	-.328	-.430				19
20	-.171	-.185	-.221	-.326		-.324	-.314	-.434				20
21	-.175	-.175	-.209	-.308		-.326	-.312	-.430				21
22	-.207	-.193	-.209	-.294		-.322	-.308	-.407				22
					α=		δ=					
					α=		δ=					

Table 10

Pressure coefficients on swept wing

Configuration 2 M=1.61 R=1.7 x 10^6

Orif	Station 1	2	3	4	24	5	6	7	8	9	10	Orif
					α=-12		δ=-30.0					
1	.674	.644	.662	.652		.032	.438	-.268				1
2	.381	.434	.480	.492		.634	.813	.505				2
3	.307	.351	.400	.428		.634	.795	.444				3
4	.309	.307	.353	.396		.674	.767	.333				4
5	.283	.287	.317	.367		.704	.755	.268				5
6	.250	.279	.307	.470		.731	.743	.254				6
7	.252	.256	.285	.597		.759	.749	.240				7
8	.254	.232	.254	.706		.767	.747	.244				8
9	.250	.222	.499	.765		.783	.745	.216				9
10	.222	.238		.797		.799	.745	.226				10
11	.230	.339		.821		.811						11
12	.238	.561		.842		.819	.747	.176				12
13	.297	.674	.791	.832		.821	.757					13
14	.513	.737	.815	.826		.819	.767					14
15	.652	.769	.807	.819		.805	.765					15
16	.688	.670	.739	.799		.791	.741					16
17		.404	.275	.331		.396	.458					17
18		.783	.840	.824		.815	.805					18
19	.937	1.132	.957	.856		.830	.826					19
20	.981	1.177	1.074	.896		.817	.751					20
21	.886	1.033	1.029	.884		.759	.692					21
22	.676	.654	.678	.620		.527	.464					22
					α=-12		δ=-20.0					
1	.662	.644	.658	.642		.026	.599	-.127				1
2	.377	.434	.474	.486		.539	.664	.446				2
3	.301	.355	.400	.422		.464	.646	.381				3
4	.305	.299	.357	.388		.426	.614	.303				4
5	.281	.285	.313	.359		.390	.648	.240				5
6	.248	.268	.301	.333		.365	.666	.222				6
7	.246	.254	.277	.307		.539	.670	.202				7
8	.250	.230	.240	.285		.589	.670	.208				8
9	.244	.218	.254	.327		.644	.684	.180				9
10	.220	.238		.511		.690	.690	.184				10
11	.228	.254		.608		.717						11
12	.234	.258		.700		.735	.700	.143				12
13	.244	.277	.610	.747		.751	.706					13
14	.248	.474	.712	.765		.763	.712					14
15	.279	.636	.749	.789		.765	.712					15
16	.383	.662	.747	.789		.753	.686					16
17		.466	.632	.664		.626	.551					17
18		.717	.765	.803		.854	.842					18
19	.717	.955	.894	.860		.890	.805					19
20	.757	.947	.939	.868		.836	.704					20
21	.759	.856	.862	.807		.747	.628					21
22	.589	.559	.583	.551		.503	.432					22
					α=-12		δ=-10.0					
1	.676	.650	.660	.646		.022	.595	.075				1
2	.388	.440	.488	.486		.539	.561	.337				2
3	.309	.359	.408	.420		.460	.501	.266				3
4	.311	.303	.363	.394		.426	.450	.212				4
5	.287	.291	.315	.359		.392	.414	.168				5
6	.254	.281	.305	.339		.361	.386	.153				6
7	.260	.260	.281	.313		.341	.353	.147				7
8	.258	.238	.250	.289		.319	.375	.137				8
9	.254	.222	.256	.291		.319	.499	.119				9
10	.232	.238		.299		.317	.579	.109				10
11	.238	.258		.301		.333						11
12	.246	.264		.301		.444	.601	.087				12
13	.254	.277	.285	.301		.563	.612					13
14	.258	.266	.260	.394		.612	.620					14
15	.254	.208	.305	.523		.601	.583					15
16	.305	.178	.396	.527		.519	.511					16
17		.145	.367	.523		.531	.452					17
18		.593	.636	.741		.900	.795					18
19	.416	.626	.747	.805		.860	.717					19
20	.468	.601	.698	.751		.755	.620					20
21	.513	.577	.668	.686		.670	.567					21
22	.448	.408	.486	.497		.472	.396					22

Table 10 Continued

Pressure coefficients on swept wing

Configuration 2 M=1.61 R=1.7 x 10^6

Orif	Station 1	2	3	4	24	5	6	7	8	9	10	Orif
					α= -12		δ= - 5.0					
1	.682	.654	.662	.648		.028	.589	.065				1
2	.394	.442	.480	.499		.555	.563	.335				2
3	.311	.357	.404	.432		.480	.503	.236				3
4	.313	.303	.363	.402		.436	.448	.153				4
5	.289	.291	.323	.367		.398	.414	.095				5
6	.252	.272	.307	.341		.365	.390	.065				6
7	.260	.258	.281	.313		.347	.355	.046				7
8	.262	.234	.252	.291		.307	.361	.032				8
9	.246	.220	.260	.299		.319	.363	.016				9
10	.234	.240		.305		.325	.361	.006				10
11	.236	.260		.311		.329						11
12	.246	.262		.307		.335	.353	-.004				12
13	.254	.275	.295	.307		.323	.339					13
14	.260	.268	.262	.279		.307	.373					14
15	.254	.202	.202	.226		.206	.339					15
16	.325	-.010	.040	.020		.061	.032					16
17		-.022	-.008	.004		.000	.028					17
18		.430	.452	.458		.670	.723					18
19	.277	.390	.460	.507		.634	.581					19
20	.319	.379	.424	.484		.581	.495					20
21	.347	.367	.420	.484		.543	.458					21
22	.291	.272	.343	.396		.392	.335					22
					α= -12		δ= 0.0					
1	.672	.648	.660	.642		.020	.585	.061				1
2	.392	.436	.476	.495		.549	.569	.339				2
3	.305	.361	.404	.430		.470	.505	.242				3
4	.313	.305	.357	.394		.434	.452	.157				4
5	.289	.291	.319	.365		.392	.416	.097				5
6	.256	.277	.305	.339		.359	.392	.061				6
7	.260	.260	.279	.309		.337	.355	.044				7
8	.260	.232	.252	.295		.311	.363	.040				8
9	.252	.220	.256	.293		.315	.367	.014				9
10	.232	.242		.301		.319	.363	.002				10
11	.234	.256		.309		.321						11
12	.242	.262		.307		.327	.353	-.046				12
13	.254	.277	.293	.305		.319	.339					13
14	.258	.266	.262	.277		.309	.309					14
15	.254	.206	.202	.224		.202	.200					15
16	.311	-.054	.000	-.113		.000	-.218					16
17		-.067	-.115	-.153		-.180	-.174					17
18		.299	.317	.349		.375	.412					18
19	.228	.270	.293	.319		.347	.392					19
20	.252	.270	.293	.315		.363	.379					20
21	.272	.275	.289	.321		.386	.359					21
22	.218	.216	.250	.277		.319	.272					22
					α= - 6		δ= -30.0					
1	.785	.648	.668	.636		.515	.654	.636				1
2	.198	.246	.281	.303		.293	.319	.250				2
3	.145	.153	.190	.186		.236	.234	.147				3
4	.137	.123	.153	.172		.194	.260	.109				4
5	.123	.105	.115	.137		.170	.396	.083				5
6	.107	.099	.111	.123		.163	.450	.081				6
7	.097	.095	.099	.107		.398	.497	.075				7
8	.091	.067	.063	.083		.480	.521	.095				8
9	.083	.052	.054	.353		.537	.541	.095				9
10	.075	.061		.428		.549	.539	.115				10
11	.071	.069		.482		.561						11
12	.069	.071		.497		.551	.531	.103				12
13	.073	.089	.466	.505		.539	.529					13
14	.077	.381	.497	.499		.519	.527					14
15	.123	.482	.486	.474		.495	.517					15
16	.246	.442	.359	.388		.472	.499					16
17		.216	.216	.272		.238	.264					17
18		.450	.543	.535		.488	.529					18
19	.662	.854	.616	.529		.499	.537					19
20	.698	1.052	1.009	.710		.551	.519					20
21	.654	.896	.979	.854		.585	.495					21
22	.539	.569	.628	.628		.448	.319					22

Table 10 Continued

Pressure coefficients on swept wing

Configuration 2 M= 1.61 R= 1.7 x 10^6

Orif	Station 1	2	3	4	24	5	6	7	8	9	10	Orif
						α= - 6	δ= -20.0					
1	.783	.654	.672	.640		.515	.668	.676				1
2	.200	.254	.279	.309		.301	.331	.163				2
3	.147	.153	.186	.196		.236	.244	.030				3
4	.141	.119	.149	.176		.200	.210	.006				4
5	.127	.105	.123	.147		.176	.184	-.042				5
6	.107	.101	.115	.133		.159	.163	-.063				6
7	.103	.093	.105	.117		.133	.129	-.083				7
8	.093	.067	.075	.095		.097	.109	-.034				8
9	.083	.054	.059	.071		.079	.131	.004				9
10	.077	.057		.077		.081	.305	.022				10
11	.073	.067		.077		.232						11
12	.071	.073		.125		.369	.398	.042				12
13	.079	.075	.087	.359		.402	.420					13
14	.079	.071	.315	.398		.440	.434					14
15	.069	.176	.383	.410		.438	.402					15
16	.101	.281	.392	.420		.406	.402					16
17		.153	.303	.353		.319	.291					17
18		.379	.420	.446		.466	.497					18
19	.333	.646	.591	.549		.551	.547					19
20	.416	.648	.719	.658		.628	.567					20
21	.442	.587	.696	.690		.652	.549					21
22	.367	.398	.470	.480		.450	.371					22
						α= - 6	δ= -10.0					
1	.777	.650	.672	.646		.509	.668	.666				1
2	.202	.256	.291	.319		.325	.331	.178				2
3	.153	.159	.194	.206		.262	.258	.057				3
4	.141	.127	.159	.188		.220	.230	.022				4
5	.125	.109	.129	.161		.192	.204	-.030				5
6	.109	.101	.121	.139		.170	.178	-.048				6
7	.105	.099	.115	.127		.147	.149	-.057				7
8	.093	.073	.085	.109		.105	.141	-.067				8
9	.085	.061	.069	.081		.093	.127	-.075				9
10	.081	.061		.097		.095	.119	-.087				10
11	.073	.075		.097		.099						11
12	.075	.077		.101		.105	.125	-.105				12
13	.083	.089	.093	.097		.109	.115					13
14	.079	.081	.089	.097		.105	.107					14
15	.069	.044	.054	.073		.065	.081					15
16	.087	.008	.016	.034		.050	.012					16
17		.008	.020	.034		.034	.036					17
18		.226	.226	.234		.254	.408					18
19	.149	.285	.341	.367		.414	.416					19
20	.188	.264	.323	.355		.398	.349					20
21	.212	.250	.309	.337		.361	.311					21
22	.172	.174	.224	.250		.256	.210					22
						α= - 6	δ= 0.0					
1	.779	.650	.674	.652		.436	.658	.557				1
2	.234	.291	.335	.349		.363	.383	.218				2
3	.184	.200	.234	.232		.301	.307	.117				3
4	.180	.166	.194	.224		.258	.285	.085				4
5	.161	.145	.157	.204		.234	.262	.018				5
6	.139	.141	.161	.180		.206	.232	.004				6
7	.147	.135	.143	.170		.192	.206	-.004				7
8	.121	.111	.117	.149		.157	.216	-.004				8
9	.123	.093	.109	.133		.151	.204	-.018				9
10	.113	.101		.143		.159	.198	-.032				10
11	.109	.115		.147		.168						11
12	.113	.129		.149		.178	.204	-.063				12
13	.119	.133	.145	.149		.184	.184					13
14	.123	.133	.133	.149		.170	.176					14
15	.113	.093	.101	.129		.111	.141					15
16	.121	-.038	-.004	-.032		.036	-.014					16
17		-.010	-.032	-.036		-.028	-.036					17
18		.166	.145	.190		.178	.204					18
19	.141	.149	.155	.192		.180	.206					19
20	.157	.149	.161	.184		.204	.190					20
21	.143	.166	.161	.182		.204	.186					21
22	.111	.125	.127	.133		.166	.133					22

Table 10 Continued

Pressure coefficients on swept wing

Configuration 2 M= 1.61 R= 1.7 x 10^6

Orif	Station 1	2	3	4	24	5	6	7	8	9	10	Orif
					α= 0		δ= -30.0					
1	.809	.652	.688	.543		.696	.579	.817				1
2	.073	.044	.071	.083		.085	.103	.059				2
3	.022	-.012	.002	.012		.034	.026	-.061				3
4	.010	-.022	-.024	-.018		-.014	-.004	-.026				4
5	.008	-.034	-.040	-.038		-.038	-.010	.071				5
6	-.010	-.036	-.040	-.050		-.044	.168	.087				6
7	-.022	-.034	-.052	-.054		-.020	.216	.119				7
8	-.024	-.052	-.063	-.071		.077	.240	.125				8
9	-.030	-.063	-.073	-.083		.244	.272	.113				9
10	-.034	-.061		.125		.289	.266	.123				10
11	-.040	-.050		.198		.305						11
12	-.040	-.046		.277		.303	.299	.103				12
13	-.036	-.040	.220	.291		.303	.297					13
14	-.042	.065	.301	.303		.285	.287					14
15	-.040	.272	.311	.283		.252	.279					15
16	.038	.279	.222	.200		.222	.275					16
17		.151	.236	.266		.232	.224					17
18		.260	.345	.327		.272	.275					18
19	.404	.608	.392	.305		.260	.283					19
20	.490	.874	.773	.460		.325	.311					20
21	.462	.761	.930	.702		.398	.323					21
22	.408	.497	.587	.626		.351	.242					22
					α= 0		δ= -20.0					
1	.807	.652	.690	.543		.696	.583	.811				1
2	.077	.052	.087	.095		.101	.117	.063				2
3	.028	.002	.014	.024		.042	.042	-.054				3
4	.018	-.014	-.008	-.006		.004	.014	-.038				4
5	.010	-.030	-.034	-.020		-.016	.002	-.042				5
6	-.010	-.030	-.034	-.038		-.036	-.018	-.048				6
7	-.010	-.028	-.040	-.038		-.044	-.030	-.044				7
8	-.020	-.046	-.057	-.052		-.057	-.038	-.057				8
9	-.026	-.057	-.065	-.067		-.065	-.044	-.050				9
10	-.034	-.054		-.057		-.054	-.050	-.012				10
11	-.036	-.042		-.057		-.057						11
12	-.040	-.038		-.054		-.024	.127	.050				12
13	-.034	-.028	-.044	-.022		.143	.163					13
14	-.030	-.036	.018	.147		.196	.178					14
15	-.036	-.002	.155	.180		.198	.168					15
16	-.002	.105	.170	.182		.174	.163					16
17		.046	.129	.159		.143	.143					17
18		.163	.200	.186		.208	.178					18
19	.131	.369	.321	.258		.252	.208					19
20	.196	.394	.436	.363		.311	.252					20
21	.216	.351	.456	.430		.351	.285					21
22	.176	.236	.313	.323		.264	.220					22
					α= 0		δ= 0.0					
1	.815	.652	.690	.567		.688	.622	.805				1
2	.105	.105	.147	.147		.163	.178	.103				2
3	.059	.042	.059	.067		.109	.101	-.010				3
4	.052	.026	.034	.048		.071	.085	-.002				4
5	.042	.010	.008	.034		.046	.071	-.020				5
6	.022	.006	.010	.012		.030	.044	-.034				6
7	.022	.008	.002	.008		.016	.028	-.034				7
8	.008	-.012	-.010	-.006		-.004	.030	-.046				8
9	.006	-.022	-.026	-.014		-.010	.028	-.042				9
10	-.006	-.018		.000		.000	.016	-.067				10
11	-.008	-.008		.000		.002						11
12	-.008	-.004		.000		.004	.022	-.065				12
13	.002	.002	.010	-.002		.012	.022					13
14	.002	.004	-.002	.002		.012	.016					14
15	-.006	-.026	-.018	.000		-.014	.022					15
16	.002	-.054	-.046	-.050		-.018	-.008					16
17		-.030	-.034	-.040		-.034	-.032					17
18		.028	.014	.040		.014	.030					18
19	.030	.036	.030	.044		.032	.054					19
20	.046	.038	.038	.059		.059	.050					20
21	.022	.054	.044	.057		.054	.048					21
22	.002	.024	.018	.026		.036	.022					22

Table 10 Continued

Pressure coefficients on swept wing

Configuration 2 M=1.61 R=1.7 x 10^6

Orif	Station 1	2	3	4	24	5	6	7	8	9	10	Orif
					α= 0		δ= 20.0					
1	.799	.644	.676	.559		.694	.618	.819				1
2	.067	.038	.067	.099		.105	.127	.063				2
3	.018	-.022	-.006	.022		.042	.038	-.073				3
4	.004	-.032	-.024	-.010		.004	.008	-.030				4
5	.000	-.040	-.030	-.026		-.022	-.004	-.020				5
6	-.018	-.040	-.034	-.042		-.030	-.006	-.030				6
7	-.022	-.042	-.040	-.044		-.040	-.022	-.020				7
8	-.034	-.057	-.057	-.059		-.052	-.028	-.036				8
9	-.038	-.067	-.061	-.075		-.052	-.036	-.032				9
10	-.040	-.069		-.050		-.046	-.046	-.034				10
11	-.044	-.057		-.050		-.044						11
12	-.046	-.050		-.044		-.036	-.036	-.054				12
13	-.046	-.044	-.030	-.044		-.036	-.038					13
14	-.046	-.042	-.034	-.038		-.036	-.038					14
15	-.052	-.057	-.012	.040		.071	.119					15
16	-.032	.022	.093	.127		.143	.135					16
17		.036	.129	.161		.172	.155					17
18		-.163	-.182	-.145		-.178	-.157					18
19	-.135	-.170	-.163	-.137		-.163	-.133					19
20	-.143	-.166	-.153	-.129		-.127	-.121					20
21	-.159	-.133	-.145	-.121		-.127	-.121					21
22	-.163	-.137	-.161	-.153		-.129	-.135					22
					α= 0		δ= 30.0					
1	.809	.648	.684	.567		.704	.618	.821				1
2	.081	.046	.079	.119		.117	.137	.063				2
3	.026	-.014	.004	.028		.050	.040	-.073				3
4	.016	-.020	-.018	.000		.010	.018	-.032				4
5	.008	-.032	-.022	-.020		-.010	.000	-.002				5
6	-.010	-.036	-.024	-.034		-.022	-.012	.012				6
7	-.012	-.032	-.034	-.032		-.036	-.030	.010				7
8	-.030	-.052	-.052	-.050		-.050	-.040	-.010				8
9	-.032	-.063	-.059	-.067		-.061	-.046	-.002				9
10	-.034	-.059		-.052		-.059	-.054	-.002				10
11	-.038	-.048		-.054		-.059						11
12	-.036	-.040		-.046		-.050	-.050	-.010				12
13	-.034	-.038	-.032	-.044		-.046	-.050					13
14	-.034	-.042	-.034	-.042		-.040	-.038					14
15	-.038	-.048	.034	.101		.125	.155					15
16	-.018	.075	.151	.188		.194	.172					16
17		.054	.135	.174		.200	.170					17
18		-.285	-.301	-.268		-.301	-.283					18
19	-.232	-.303	-.293	-.272		-.293	-.262					19
20	-.242	-.301	-.289	-.270		-.268	-.248					20
21	-.268	-.268	-.283	-.260		-.260	-.240					21
22	-.277	-.252	-.270	-.266		-.244	-.228					22
					α= 6		δ= 0.0					
1	.844	.686	.583	.192		.717	.281	.874				1
2	-.022	-.127	-.117	-.139		-.129	-.131	-.123				2
3	-.077	-.143	-.151	-.139		-.141	-.151	-.161				3
4	-.071	-.135	-.166	-.168		-.153	-.147	-.151				4
5	-.083	-.139	-.182	-.168		-.163	-.157	-.143				5
6	-.097	-.133	-.184	-.180		-.170	-.172	-.161				6
7	-.099	-.129	-.168	-.184		-.180	-.182	-.163				7
8	-.119	-.143	-.168	-.186		-.192	-.176	-.190				8
9	-.119	-.151	-.172	-.198		-.198	-.182	-.208				9
10	-.123	-.141		-.188		-.192	-.186	-.224				10
11	-.127	-.135		-.188		-.190						11
12	-.123	-.127		-.180		-.186	-.180	-.236				12
13	-.123	-.121	-.143	-.170		-.180	-.184					13
14	-.119	-.125	-.145	-.159		-.184	-.188					14
15	-.127	-.147	-.151	-.155		-.180	-.131					15
16	-.135	-.105	-.105	-.107		-.109	-.091					16
17		-.063	-.071	-.083		-.083	-.081					17
18		-.163	-.161	-.184		-.230	-.226					18
19	-.113	-.153	-.166	-.192		-.224	-.226					19
20	-.127	-.149	-.166	-.180		-.214	-.218					20
21	-.139	-.149	-.161	-.180		-.208	-.210					21
22	-.178	-.163	-.166	-.178		-.208	-.208					22

Table 10 Continued

Pressure coefficients on swept wing

Configuration 2 M=1.61 R=1.7 x 10^6

Orif	Station 1	2	3	4	24	5	6	7	8	9	10	Orif
					α= 6		δ= 10.0					
1	.846	.690	.577	.166		.727	.246	.870				1
2	-.036	-.168	-.168	-.186		-.184	-.184	-.163				2
3	-.101	-.166	-.182	-.188		-.184	-.190	-.176				3
4	-.087	-.161	-.202	-.202		-.196	-.196	-.186				4
5	-.097	-.157	-.208	-.202		-.198	-.200	-.172				5
6	-.109	-.145	-.204	-.214		-.206	-.212	-.192				6
7	-.113	-.141	-.196	-.216		-.220	-.216	-.198				7
8	-.129	-.153	-.190	-.218		-.224	-.214	-.234				8
9	-.133	-.161	-.190	-.230		-.230	-.220	-.260				9
10	-.135	-.155		-.220		-.232	-.220	-.283				10
11	-.137	-.151		-.216		-.226						11
12	-.135	-.147		-.208		-.222	-.212	-.289				12
13	-.137	-.139	-.157	-.194		-.220	-.216					13
14	-.133	-.139	-.159	-.180		-.224	-.216					14
15	-.137	-.157	-.155	-.139		-.166	-.089					15
16	-.141	-.089	-.061	-.036		-.083	-.048					16
17		-.024	.038	.065		.059	.067					17
18		-.220	-.224	-.236		-.281	-.277					18
19	-.180	-.220	-.232	-.242		-.283	-.277					19
20	-.198	-.220	-.228	-.238		-.268	-.268					20
21	-.212	-.208	-.224	-.234		-.262	-.258					21
22	-.232	-.210	-.228	-.236		-.260	-.258					22
					α= 6		δ= 20.0					
1	.848	.692	.583	.159		.712	.244	.854				1
2	-.034	-.172	-.174	-.204		-.210	-.208	-.176				2
3	-.107	-.174	-.182	-.208		-.204	-.208	-.184				3
4	-.091	-.166	-.204	-.216		-.210	-.210	-.200				4
5	-.101	-.157	-.224	-.214		-.216	-.216	-.188				5
6	-.115	-.147	-.218	-.226		-.224	-.226	-.200				6
7	-.115	-.143	-.208	-.230		-.230	-.230	-.214				7
8	-.133	-.155	-.200	-.232		-.236	-.232	-.250				8
9	-.135	-.166	-.198	-.248		-.248	-.232	-.287				9
10	-.135	-.155		-.234		-.248	-.238	-.305				10
11	-.139	-.147		-.234		-.240						11
12	-.139	-.143		-.218		-.240	-.224	-.321				12
13	-.137	-.137	-.170	-.204		-.236	-.232					13
14	-.133	-.141	-.168	-.196		-.234	-.232					14
15	-.135	-.151	-.119	-.087		-.105	-.038					15
16	-.131	-.042	-.014	.002		-.042	-.010					16
17		.016	.103	.163		.196	.184					17
18		-.285	-.309	-.301		-.343	-.329					18
19	-.248	-.297	-.309	-.313		-.345	-.331					19
20	-.268	-.295	-.309	-.313		-.333	-.329					20
21	-.268	-.281	-.305	-.305		-.329	-.323					21
22	-.281	-.264	-.301	-.309		-.317	-.317					22
					α= 6		δ= 30.0					
1	.844	.690	.583	.161		.712	.252	.955				1
2	-.036	-.186	-.194	-.208		-.216	-.218	-.202				2
3	-.105	-.182	-.200	-.208		-.210	-.210	-.202				3
4	-.093	-.174	-.216	-.218		-.216	-.222	-.196				4
5	-.099	-.163	-.220	-.224		-.224	-.222	-.198				5
6	-.113	-.153	-.216	-.230		-.226	-.232	-.224				6
7	-.115	-.153	-.206	-.236		-.234	-.238	-.258				7
8	-.135	-.163	-.200	-.240		-.242	-.242	-.295				8
9	-.135	-.170	-.198	-.248		-.248	-.244	-.329				9
10	-.139	-.166		-.244		-.248	-.250	-.345				10
11	-.139	-.161		-.244		-.246						11
12	-.141	-.153		-.224		-.244	-.240	-.369				12
13	-.145	-.145	-.170	-.208		-.246	-.234					13
14	-.137	-.143	-.168	-.194		-.240	-.236					14
15	-.139	-.149	-.071	-.034		-.052	.000					15
16	-.129	-.016	.014	.034		-.012	.022					16
17		-.052	-.046	-.026		.008	.030					17
18		-.379	-.394	-.381		-.410	-.390					18
19	-.325	-.396	-.398	-.396		-.408	-.390					19
20	-.331	-.394	-.396	-.388		-.392	-.379					20
21	-.345	-.373	-.394	-.373		-.381	-.371					21
22	-.367	-.337	-.351	-.363		-.365	-.357					22

Table 10 Continued

Pressure coefficients on swept wing

Configuration 2 M=1.61 R=1.7 x 10^6

Orif	Station 1	2	3	4	24	5	6	7	8	9	10	Orif
					α= 12		δ= 0.0					
1	.882	.305	.240	-.093		.595	.042	.824				1
2	-.101	-.260	-.266	-.291		-.291	-.299	-.299				2
3	-.159	-.256	-.275	-.285		-.281	-.287	-.299				3
4	-.145	-.252	-.287	-.289		-.283	-.285	-.297				4
5	-.155	-.254	-.297	-.285		-.287	-.283	-.303				5
6	-.166	-.240	-.287	-.297		-.291	-.291	-.317				6
7	-.176	-.214	-.285	-.299		-.293	-.297	-.327				7
8	-.192	-.214	-.279	-.299		-.299	-.295	-.347				8
9	-.188	-.222	-.279	-.311		-.307	-.297	-.371				9
10	-.192	-.218		-.299		-.303	-.299	-.383				10
11	-.196	-.210		-.301		-.301						11
12	-.186	-.204		-.291		-.295	-.289	-.392				12
13	-.194	-.202	-.252	-.275		-.291	-.287					13
14	-.190	-.202	-.238	-.262		-.287	-.289					14
15	-.194	-.214	-.212	-.226		-.250	-.210					15
16	-.192	-.143	-.123	-.208		-.208	-.194					16
17		-.042	-.057	-.081		-.075	-.095					17
18		-.252	-.232	-.313		-.343	-.345					18
19	-.210	-.246	-.246	-.319		-.349	-.343					19
20	-.226	-.244	-.254	-.307		-.341	-.333					20
21	-.230	-.244	-.248	-.295		-.333	-.329					21
22	-.260	-.244	-.242	-.281		-.325	-.319					22
					α= 12		δ= 5.0					
1	.888	.248	.172	-.184		.583	-.038	.813				1
2	-.125	-.301	-.307	-.339		-.339	-.355	-.369				2
3	-.186	-.293	-.311	-.327		-.327	-.345	-.369				3
4	-.168	-.287	-.319	-.327		-.321	-.331	-.371				4
5	-.180	-.293	-.329	-.325		-.327	-.335	-.381				5
6	-.194	-.272	-.327	-.335		-.329	-.341	-.392				6
7	-.192	-.240	-.319	-.335		-.331	-.347	-.390				7
8	-.214	-.228	-.317	-.339		-.339	-.341	-.402				8
9	-.208	-.240	-.311	-.345		-.345	-.341	-.416				9
10	-.212	-.232		-.337		-.337	-.339	-.422				10
11	-.210	-.222		-.333		-.335						11
12	-.212	-.222		-.333		-.329	-.323	-.432				12
13	-.212	-.218	-.293	-.323		-.321	-.325					13
14	-.212	-.218	-.275	-.305		-.319	-.323					14
15	-.210	-.232	-.240	-.289		-.301	-.264					15
16	-.208	-.141	-.103	-.262		-.270	-.246					16
17		.020	.087	.111		.170	.141					17
18		-.270	-.254	-.333		-.373	-.375					18
19	-.224	-.268	-.266	-.341		-.369	-.369					19
20	-.248	-.260	-.275	-.341		-.367	-.359					20
21	-.252	-.256	-.272	-.325		-.365	-.353					21
22	-.281	-.258	-.272	-.313		-.351	-.349					22
					α= 12		δ= 10.0					
1	.886	.240	.161	-.206		.579	-.044	.817				1
2	-.129	-.313	-.323	-.349		-.359	-.375	-.398				2
3	-.202	-.309	-.325	-.341		-.339	-.359	-.396				3
4	-.174	-.307	-.335	-.339		-.343	-.347	-.396				4
5	-.186	-.305	-.341	-.335		-.347	-.351	-.412				5
6	-.198	-.287	-.337	-.343		-.347	-.357	-.412				6
7	-.202	-.246	-.333	-.347		-.345	-.357	-.414				7
8	-.222	-.236	-.325	-.349		-.351	-.351	-.418				8
9	-.216	-.246	-.325	-.357		-.357	-.355	-.428				9
10	-.218	-.240		-.349		-.353	-.353	-.426				10
11	-.218	-.234		-.349		-.351						11
12	-.218	-.232		-.341		-.333	-.333	-.438				12
13	-.222	-.226	-.305	-.333		-.329	-.329					13
14	-.216	-.226	-.285	-.319		-.329	-.327					14
15	-.216	-.230	-.244	-.297		-.307	-.272					15
16	-.208	-.123	-.079	-.264		-.279	-.248					16
17		.127	.325	.426		.454	.353					17
18		-.301	-.287	-.351		-.392	-.394					18
19	-.250	-.305	-.303	-.367		-.390	-.381					19
20	-.279	-.299	-.309	-.367		-.381	-.373					20
21	-.293	-.289	-.309	-.355		-.377	-.369					21
22	-.307	-.279	-.307	-.341		-.365	-.361					22

Table 10 Concluded

Pressure coefficients on swept wing

Configuration 2 M= 1.61 R= 1.7 x 10^6

Orif	Station 1	2	3	4	24	5	6	7	8	9	10	Orif
					α= 12		δ= 20.0					
1	.884	.244	.163	-.232		.583	-.079	.692				1
2	-.129	-.329	-.339	-.371		-.390	-.400	-.442				2
3	-.192	-.319	-.339	-.353		-.363	-.381	-.442				3
4	-.174	-.313	-.345	-.355		-.361	-.369	-.440				4
5	-.182	-.309	-.351	-.353		-.363	-.369	-.452				5
6	-.194	-.289	-.349	-.359		-.369	-.371	-.450				6
7	-.200	-.246	-.349	-.361		-.367	-.373	-.450				7
8	-.218	-.234	-.347	-.365		-.367	-.371	-.450				8
9	-.218	-.246	-.339	-.371		-.373	-.369	-.458				9
10	-.220	-.240		-.363		-.369	-.365	-.466				10
11	-.220	-.234		-.365		-.361						11
12	-.218	-.230		-.353		-.349	-.349	-.470				12
13	-.220	-.226	-.319	-.345		-.337	-.343					13
14	-.220	-.226	-.293	-.329		-.341	-.331					14
15	-.214	-.226	-.224	-.301		-.315	-.228					15
16	-.198	-.091	-.042	-.252		-.287	-.196					16
17		.057	.123	.184		.418	.363					17
18		-.363	-.365	-.396		-.432	-.434					18
19	-.315	-.379	-.388	-.414		-.428	-.420					19
20	-.353	-.375	-.383	-.418		-.426	-.412					20
21	-.335	-.361	-.381	-.410		-.420	-.408					21
22	-.357	-.319	-.365	-.375		-.392	-.400					22
					α= 12		δ= 30.0					
1	.888	.240	.168	-.224		.597	-.206	.523				1
2	-.133	-.333	-.345	-.379		-.386	-.428	-.462				2
3	-.196	-.321	-.345	-.357		-.369	-.420	-.464				3
4	-.178	-.317	-.347	-.351		-.361	-.396	-.466				4
5	-.186	-.309	-.351	-.355		-.359	-.388	-.480				5
6	-.198	-.293	-.347	-.355		-.359	-.388	-.480				6
7	-.198	-.252	-.347	-.363		-.365	-.388	-.472				7
8	-.220	-.236	-.341	-.363		-.367	-.379	-.472				8
9	-.214	-.248	-.337	-.367		-.367	-.375	-.474				9
10	-.216	-.240		-.363		-.367	-.369	-.476				10
11	-.216	-.240		-.363		-.361						11
12	-.218	-.236		-.355		-.345	-.359	-.484				12
13	-.222	-.226	-.313	-.339		-.335	-.353					13
14	-.218	-.232	-.291	-.331		-.331	-.337					14
15	-.216	-.200	-.186	-.281		-.252	-.141					15
16	-.188	-.089	-.016	-.238		-.230	-.113					16
17		-.168	-.101	-.234		-.034	.069					17
18		-.424	-.418	-.436		-.446	-.448					18
19	-.359	-.434	-.434	-.440		-.446	-.432					19
20	-.381	-.434	-.432	-.432		-.428	-.422					20
21	-.379	-.412	-.420	-.416		-.420	-.416					21
22	-.412	-.371	-.379	-.396		-.402	-.410					22
					α=		δ=					

Table 11

Pressure coefficients on swept wing

Configuration 2 M=1.61 R=3.6 x 10^6

Orif	Station 1	2	3	4	24	5	6	7	8	9	10	Orif
					$\alpha=-15$		$\delta=0.0$					
1	.602	.659	.628	.701		-.168	.417	-.225				1
2	.448	.568	.628	.638		.684	.691	.445				2
3	.445	.498	.574	.572		.616	.657	.396				3
4	.430	.445	.528	.555		.570	.603	.306				4
5	.403	.439	.477	.512		.536	.577	.225				5
6	.379	.435	.452	.474		.509	.556	.190				6
7	.390	.407	.430	.451		.484	.544	.169				7
8	.411	.393	.394	.433		.462	.553	.151				8
9	.406	.375	.407	.433		.474	.553	.120				9
10	.387	.388		.431		.476	.531	.102				10
11	.393	.391		.435		.482						11
12	.395	.397		.439		.478	.499	.011				12
13	.387	.400	.409	.425		.460	.460					13
14	.387	.375	.373	.389		.433	.405					14
15	.386	.311	.307	.319		.319	.284					15
16	.480	.030	.092	.032		.098	-.040					16
17		.015	.017	.017		.013	-.004					17
18		.368	.247	.200		.262	.556					18
19	.309	.367	.403	.464		.582	.578					19
20	.347	.375	.416	.515		.588	.504					20
21	.370	.378	.446	.520		.558	.464					21
22	.318	.318	.391	.427		.418	.346					22
					$\alpha=-12$		$\delta=-5.0$					
1	.698	.673	.703	.653		.082	.611	.126				1
2	.417	.489	.517	.524		.561	.580	.364				2
3	.356	.404	.443	.447		.484	.518	.262				3
4	.349	.349	.400	.421		.450	.462	.182				4
5	.324	.327	.350	.386		.409	.434	.124				5
6	.295	.308	.332	.344		.376	.407	.088				6
7	.290	.288	.304	.322		.365	.371	.070				7
8	.286	.264	.264	.294		.333	.378	.065				8
9	.281	.249	.266	.302		.337	.378	.039				9
10	.260	.259		.320		.343	.375	.026				10
11	.266	.269		.328		.347						11
12	.275	.276		.327		.352	.368	-.039				12
13	.264	.286	.317	.320		.339	.352					13
14	.267	.279	.285	.297		.326	.322					14
15	.270	.231	.232	.246		.243	.253					15
16	.363	.029	.100	.173		.195	.186					16
17		.034	.106	.171		.188	.225					17
18		.407	.255	.240		.297	.681					18
19	.298	.444	.516	.535		.598	.686					19
20	.371	.429	.490	.548		.618	.587					20
21	.392	.417	.474	.522		.603	.536					21
22	.343	.322	.386	.405		.454	.389					22
					$\alpha=-12$		$\delta=0.0$					
1	.698	.680	.708	.660		.078	.606	.116				1
2	.418	.492	.519	.526		.562	.587	.368				2
3	.356	.410	.444	.450		.484	.527	.267				3
4	.353	.351	.403	.423		.447	.471	.183				4
5	.326	.330	.355	.387		.409	.439	.130				5
6	.297	.308	.333	.347		.375	.415	.091				6
7	.293	.288	.304	.325		.366	.377	.070				7
8	.290	.267	.264	.299		.335	.387	.066				8
9	.280	.254	.267	.304		.345	.382	.043				9
10	.261	.261		.323		.347	.379	.029				10
11	.270	.270		.332		.351						11
12	.276	.278		.332		.355	.373	-.034				12
13	.267	.289	.318	.323		.345	.355					13
14	.271	.279	.291	.301		.331	.331					14
15	.271	.232	.234	.247		.234	.227					15
16	.371	-.029	.032	-.066		.033	-.129					16
17		-.050	-.087	-.101		-.120	-.112					17
18		.294	.257	.209		.211	.290					18
19	.227	.280	.302	.308		.335	.312					19
20	.262	.280	.300	.321		.334	.303					20
21	.281	.282	.301	.313		.336	.300					21
22	.232	.229	.262	.275		.290	.252					22

Table 11 Continued

Pressure coefficients on swept wing

Configuration 2 M= 1.61 R=3.6 x 10^6

Orif	Station 1	2	3	4	24	5	6	7	8	9	10	Orif
					α= -12		δ= 5.0					
1	.701	.680	.704	.663		.067	.605	.094				1
2	.422	.492	.521	.529		.564	.593	.372				2
3	.361	.408	.443	.451		.492	.533	.272				3
4	.354	.352	.406	.421		.457	.477	.190				4
5	.331	.330	.356	.389		.417	.446	.137				5
6	.302	.308	.335	.352		.384	.423	.093				6
7	.297	.288	.311	.324		.375	.382	.082				7
8	.291	.266	.265	.297		.339	.394	.073				8
9	.286	.250	.271	.309		.348	.393	.048				9
10	.267	.262		.327		.351	.389	.037				10
11	.273	.272		.338		.355						11
12	.280	.278		.335		.361	.380	-.034				12
13	.270	.288	.321	.328		.351	.364					13
14	.273	.281	.291	.304		.335	.334					14
15	.276	.234	.238	.252		.239	.235					15
16	.390	-.035	.035	-.078		.037	-.152					16
17		-.062	-.106	-.136		-.155	-.130					17
18		.141	.129	.140		.145	.143					18
19	.169	.148	.134	.142		.156	.147					19
20	.191	.159	.143	.152		.169	.141					20
21	.158	.177	.162	.157		.168	.139					21
22	.120	.149	.149	.148		.155	.125					22
					α= -12		δ= 10.0					
1	.698	.679	.703	.664		.068	.603	.084				1
2	.417	.492	.524	.531		.573	.599	.375				2
3	.352	.410	.444	.457		.498	.537	.279				3
4	.352	.353	.401	.427		.463	.482	.199				4
5	.329	.333	.360	.395		.425	.451	.133				5
6	.300	.310	.339	.355		.389	.427	.100				6
7	.297	.290	.312	.331		.380	.389	.087				7
8	.290	.270	.269	.308		.343	.398	.078				8
9	.285	.251	.274	.313		.354	.399	.051				9
10	.264	.262		.336		.359	.396	.036				10
11	.272	.272		.341		.363						11
12	.279	.281		.342		.365	.386	-.029				12
13	.270	.290	.326	.336		.354	.371					13
14	.274	.283	.299	.305		.339	.340					14
15	.276	.238	.241	.254		.244	.236					15
16	.397	-.029	.035	-.074		.040	-.167					16
17		-.046	-.089	-.128		-.157	-.135					17
18		.017	.014	.035		.039	.023					18
19	.073	.025	.013	.024		.029	.024					19
20	.092	.041	.021	.030		.038	.021					20
21	.074	.077	.037	.040		.041	.018					21
22	.038	.070	.039	.028		.036	.012					22
					α=-12		δ= 20.0					
1	.697	.680	.708	.654		.058	.595	.059				1
2	.421	.495	.525	.531		.576	.601	.378				2
3	.353	.411	.448	.458		.501	.542	.290				3
4	.351	.354	.408	.432		.470	.493	.200				4
5	.329	.335	.357	.397		.430	.458	.144				5
6	.299	.312	.339	.360		.398	.435	.106				6
7	.293	.291	.310	.334		.389	.398	.091				7
8	.290	.273	.271	.308		.346	.408	.081				8
9	.284	.257	.275	.321		.356	.408	.057				9
10	.266	.265		.338		.361	.405	.042				10
11	.273	.276		.347		.366						11
12	.281	.284		.348		.370	.394	-.021				12
13	.271	.294	.331	.342		.358	.375					13
14	.274	.288	.301	.315		.342	.346					14
15	.277	.239	.241	.262		.245	.241					15
16	.387	-.006	.040	-.082		.040	-.166					16
17		.002	-.061	-.139		-.187	-.131					17
18		-.196	-.201	-.192		-.191	-.198					18
19	-.086	-.204	-.212	-.202		-.200	-.204					19
20	-.064	-.200	-.206	-.195		-.191	-.205					20
21	-.080	-.175	-.197	-.189		-.189	-.202					21
22	-.112	-.103	-.193	-.196		-.190	-.204					22

Table 11 Continued

Pressure coefficients on swept wing

Configuration 2 M=1.61 R=3.6 x 10^6

Orif	Station 1	2	3	4	24	5	6	7	8	9	10	Orif
					α=-12		δ= 30.0					
1	.699	.678	.703	.657		.052	.592	.042				1
2	.419	.494	.526	.537		.586	.606	.383				2
3	.352	.411	.448	.465		.511	.548	.291				3
4	.354	.356	.409	.437		.472	.496	.206				4
5	.328	.334	.362	.402		.435	.462	.147				5
6	.300	.315	.341	.365		.404	.434	.112				6
7	.294	.293	.315	.338		.394	.399	.098				7
8	.292	.273	.275	.318		.353	.413	.091				8
9	.287	.256	.279	.328		.359	.412	.072				9
10	.268	.268		.342		.364	.408	.055				10
11	.276	.276		.350		.370						11
12	.281	.285		.351		.372	.397	.010				12
13	.276	.296	.336	.345		.361	.377					13
14	.278	.289	.304	.318		.348	.347					14
15	.279	.240	.247	.264		.248	.241					15
16	.380	.020	.043	-.080		.044	-.121					16
17		.016	-.157	-.231		-.237	-.216					17
18		-.301	-.309	-.297		-.306	-.307					18
19	-.167	-.319	-.322	-.308		-.315	-.316					19
20	-.203	-.318	-.318	-.311		-.310	-.317					20
21	-.205	-.305	-.313	-.304		-.305	-.317					21
22	-.214	-.234	-.309	-.307		-.304	-.314					22
					α=- 9		δ= 0.0					
1	.773	.699	.744	.650		.341	.693	.467				1
2	.477	.384	.424	.445		.464	.486	.307				2
3	.262	.306	.329	.339		.388	.406	.166				3
4	.256	.253	.301	.320		.348	.351	.093				4
5	.234	.229	.257	.289		.317	.325	.035				5
6	.210	.216	.240	.259		.287	.290	.011				6
7	.205	.203	.225	.237		.263	.248	-.020				7
8	.199	.176	.177	.205		.207	.236	-.025				8
9	.193	.162	.171	.184		.203	.228	-.039				9
10	.177	.169		.196		.210	.230	-.054				10
11	.182	.178		.204		.216						11
12	.189	.182		.214		.221	.240	-.080				12
13	.183	.188	.203	.212		.220	.237					13
14	.180	.177	.191	.199		.219	.229					14
15	.165	.137	.145	.157		.149	.159					15
16	.257	-.061	-.022	-.081		-.020	-.091					16
17		-.054	-.074	-.091		-.103	-.091					17
18		.165	.156	.139		.129	.180					18
19	.129	.175	.170	.177		.195	.191					19
20	.159	.165	.170	.187		.200	.174					20
21	.171	.165	.183	.188		.195	.167					21
22	.132	.134	.158	.168		.166	.124					22
					α=- 6		δ=-15.0					
1	.803	.689	.738	.692		.563	.702	.750				1
2	.217	.299	.318	.351		.333	.359	.207				2
3	.183	.191	.213	.217		.271	.263	.047				3
4	.176	.165	.192	.209		.240	.228	.011				4
5	.159	.140	.158	.180		.200	.213	-.012				5
6	.134	.133	.147	.158		.190	.189	-.033				6
7	.125	.123	.137	.141		.163	.158	-.047				7
8	.120	.102	.101	.116		.120	.139	-.060				8
9	.120	.084	.084	.091		.106	.128	-.073				9
10	.104	.092		.102		.106	.118	-.088				10
11	.106	.101		.106		.106						11
12	.114	.101		.117		.113	.154	.079				12
13	.109	.110	.115	.118		.140	.364					13
14	.110	.103	.112	.145		.382	.444					14
15	.099	.071	.205	.396		.446	.463					15
16	.149	.149	.332	.430		.452	.465					16
17		.140	.304	.389		.377	.384					17
18		.301	.356	.426		.452	.479					18
19	.278	.560	.577	.549		.535	.570					19
20	.355	.534	.631	.657		.637	.623					20
21	.390	.508	.613	.652		.648	.599					21
22	.349	.395	.456	.474		.465	.417					22

Table 11 Continued

Pressure coefficients on swept wing

Configuration 2 M=1.61 R=3.6 x 10^6

Orf	Station 1	2	3	4	24	5	6	7	8	9	10	Orf
					α= - 6		δ= -10.0					
1	.807	.694	.739	.689		.559	.702	.743				1
2	.220	.303	.323	.351		.335	.362	.210				2
3	.184	.196	.219	.221		.277	.269	.058				3
4	.178	.164	.199	.208		.244	.234	.022				4
5	.161	.145	.159	.182		.205	.219	-.007				5
6	.135	.133	.145	.163		.190	.196	-.030				6
7	.132	.123	.135	.148		.172	.160	-.042				7
8	.121	.099	.102	.118		.123	.142	-.058				8
9	.120	.085	.085	.096		.110	.134	-.070				9
10	.106	.095		.106		.110	.121	-.088				10
11	.108	.103		.108		.113						11
12	.114	.108		.119		.118	.131	-.086				12
13	.110	.114	.117	.121		.121	.125					13
14	.108	.106	.110	.113		.124	.120					14
15	.095	.065	.076	.088		.092	.115					15
16	.155	.044	.079	.149		.149	.141					16
17		.047	.111	.161		.165	.170					17
18		.265	.190	.202		.238	.402					18
19	.199	.384	.436	.449		.470	.540					19
20	.253	.361	.432	.486		.528	.502					20
21	.290	.339	.416	.464		.504	.460					21
22	.254	.270	.329	.356		.371	.332					22
					α= - 6		δ= - 5.0					
1	.808	.692	.741	.693		.558	.706	.734				1
2	.222	.304	.327	.355		.344	.371	.219				2
3	.184	.196	.223	.229		.281	.277	.065				3
4	.182	.165	.202	.214		.249	.238	.025				4
5	.163	.149	.163	.186		.214	.225	-.006				5
6	.138	.135	.152	.167		.196	.203	-.028				6
7	.134	.127	.141	.151		.175	.167	-.041				7
8	.127	.105	.104	.124		.125	.149	-.055				8
9	.120	.091	.090	.102		.112	.137	-.066				9
10	.110	.095		.109		.113	.129	-.084				10
11	.110	.103		.109		.116						11
12	.114	.108		.122		.123	.136	-.082				12
13	.109	.115	.122	.122		.126	.134					13
14	.111	.109	.116	.116		.127	.131					14
15	.098	.069	.078	.089		.077	.086					15
16	.163	-.011	-.023	-.012		-.032	-.023					16
17		-.004	-.002	-.004		-.022	-.017					17
18		.174	.147	.116		.097	.191					18
19	.124	.225	.248	.256		.262	.263					19
20	.177	.216	.247	.269		.282	.254					20
21	.193	.203	.245	.265		.280	.241					21
22	.145	.158	.201	.223		.219	.177					22
					α= - 6		δ= 0.0					
1	.809	.691	.736	.690		.557	.706	.732				1
2	.210	.290	.315	.347		.328	.370	.210				2
3	.169	.186	.208	.218		.269	.271	.050				3
4	.172	.158	.185	.205		.237	.234	.019				4
5	.153	.140	.156	.178		.201	.217	-.012				5
6	.129	.130	.143	.157		.188	.198	-.028				6
7	.125	.117	.134	.140		.166	.166	-.042				7
8	.114	.098	.093	.116		.121	.143	-.052				8
9	.110	.080	.082	.089		.110	.133	-.064				9
10	.107	.089		.095		.108	.123	-.083				10
11	.103	.098		.102		.110						11
12	.107	.103		.116		.114	.132	-.084				12
13	.105	.107	.115	.118		.118	.126					13
14	.104	.100	.108	.111		.121	.123					14
15	.090	.064	.069	.078		.074	.078					15
16	.151	-.058	-.061	-.068		-.068	-.066					16
17		-.050	-.056	-.064		-.077	-.067					17
18		.080	.083	.078		.075	.093					18
19	.067	.093	.087	.091		.099	.093					19
20	.088	.092	.088	.099		.103	.080					20
21	.088	.086	.097	.099		.105	.072					21
22	.060	.064	.078	.084		.083	.047					22

Table 11 Continued

Pressure coefficients on swept wing

Configuration 2 M=1.61 R=3.6 x 10^6

Orif	Station 1	2	3	4	24	5	6	7	8	9	10	Orif
					α=-6		δ= 5.0					
1	.812	.695	.740	.693		.558	.707	.724				1
2	.219	.297	.324	.353		.341	.373	.219				2
3	.177	.191	.218	.225		.277	.277	.063				3
4	.178	.167	.192	.215		.248	.242	.021				4
5	.156	.146	.162	.187		.211	.227	-.010				5
6	.132	.133	.151	.163		.195	.205	-.027				6
7	.128	.127	.140	.151		.172	.171	-.048				7
8	.120	.102	.104	.121		.125	.150	-.057				8
9	.113	.087	.090	.102		.115	.139	-.069				9
10	.114	.094		.107		.114	.133	-.085				10
11	.109	.106		.107		.117						11
12	.108	.108		.121		.124	.138	-.085				12
13	.108	.114	.120	.125		.126	.135					13
14	.110	.107	.116	.120		.130	.133					14
15	.095	.071	.079	.089		.079	.090					15
16	.154	-.045	-.050	-.063		-.056	-.064					16
17		-.035	-.043	-.058		-.076	-.062					17
18		-.012	-.003	.007		.004	.002					18
19	.032	-.007	-.015	-.005		-.009	-.001					19
20	.035	.001	-.017	-.002		.002	-.012					20
21	.004	.009	-.007	-.002		.004	-.019					21
22	-.021	.004	-.007	-.012		-.008	-.036					22
					α=-6		δ= 10.0					
1	.811	.697	.739	.694		.559	.709	.719				1
2	.216	.300	.323	.357		.349	.379	.229				2
3	.177	.193	.221	.232		.281	.285	.071				3
4	.177	.168	.195	.217		.251	.242	.031				4
5	.162	.148	.160	.191		.218	.230	-.006				5
6	.133	.134	.150	.168		.201	.209	-.023				6
7	.130	.128	.139	.157		.181	.172	-.038				7
8	.120	.105	.103	.129		.131	.156	-.051				8
9	.114	.093	.090	.099		.119	.145	-.063				9
10	.117	.095		.114		.119	.135	-.083				10
11	.109	.107		.118		.122						11
12	.112	.110		.128		.128	.145	-.083				12
13	.113	.117	.122	.129		.132	.142					13
14	.112	.108	.118	.123		.135	.136					14
15	.097	.071	.081	.093		.083	.094					15
16	.157	.009	-.011	-.019		-.042	-.041					16
17		.015	.019	.007		-.016	-.011					17
18		-.106	-.103	-.095		-.091	-.096					18
19	-.037	-.114	-.115	-.106		-.108	-.102					19
20	-.021	-.101	-.116	-.105		-.099	-.110					20
21	-.065	-.079	-.110	-.103		-.096	-.114					21
22	-.102	-.073	-.113	-.110		-.104	-.124					22
					α=-6		δ= 20.0					
1	.811	.698	.740	.692		.542	.712	.702				1
2	.219	.300	.327	.358		.349	.394	.241				2
3	.176	.194	.220	.232		.284	.298	.090				3
4	.179	.170	.202	.219		.256	.262	.043				4
5	.160	.147	.165	.190		.219	.242	.006				5
6	.135	.135	.155	.168		.199	.222	-.011				6
7	.133	.129	.145	.155		.174	.184	-.032				7
8	.120	.106	.105	.126		.136	.165	-.049				8
9	.116	.092	.092	.104		.125	.159	-.058				9
10	.118	.098		.112		.127	.149	-.077				10
11	.112	.108		.116		.131						11
12	.112	.113		.129		.136	.157	-.067				12
13	.122	.118	.127	.131		.140	.154					13
14	.117	.111	.120	.121		.143	.153					14
15	.103	.077	.086	.093		.090	.108					15
16	.113	.078	.097	-.019		-.042	.062					16
17		.092	.143	.024		-.015	.069					17
18		-.239	-.248	-.242		-.239	-.233					18
19	-.129	-.259	-.262	-.253		-.250	-.239					19
20	-.164	-.252	-.260	-.250		-.239	-.244					20
21	-.173	-.237	-.258	-.247		-.239	-.246					21
22	-.194	-.194	-.260	-.255		-.240	-.255					22

Table 11 Continued

Pressure coefficients on swept wing

Configuration 2 M=1.61 R=3.6 x 10^6

Orif	Station 1	2	3	4	24	5	6	7	8	9	10	Orif
						α= - 6	δ= 30.0					
1	.808	.696	.740	.685		.528	.715	.689				1
2	.219	.302	.332	.363		.359	.403	.248				2
3	.178	.195	.223	.234		.289	.306	.096				3
4	.182	.171	.208	.224		.259	.265	.051				4
5	.166	.149	.167	.195		.223	.252	.015				5
6	.139	.137	.156	.172		.207	.229	.046				6
7	.137	.128	.145	.160		.185	.191	.050				7
8	.125	.109	.106	.133		.145	.172	.052				8
9	.118	.092	.094	.108		.134	.163	.064				9
10	.118	.100		.118		.134	.155	.053				10
11	.110	.110		.121		.138						11
12	.113	.111		.134		.145	.163	.072				12
13	.120	.119	.129	.132		.149	.160					13
14	.119	.114	.122	.129		.150	.158					14
15	.107	.083	.149	.126		.096	.115					15
16	.113	.182	.283	.159		-.050	.093					16
17		.192	.292	.161		-.040	.089					17
18		-.349	-.356	-.349		-.349	-.348					18
19	-.246	-.371	-.375	-.363		-.362	-.355					19
20	-.264	-.370	-.374	-.366		-.355	-.357					20
21	-.276	-.361	-.372	-.362		-.352	-.356					21
22	-.295	-.306	-.372	-.369		-.351	-.352					22
						α= - 3	δ= 0.0					
1	.828	.717	.730	.685		.685	.710	.836				1
2	.151	.186	.221	.248		.226	.252	.126				2
3	.113	.095	.088	.106		.155	.140	-.072				3
4	.112	.083	.106	.121		.142	.127	-.028				4
5	.092	.069	.078	.088		.112	.113	-.027				5
6	.071	.060	.068	.072		.097	.097	-.046				6
7	.067	.054	.056	.062		.080	.074	-.052				7
8	.056	.036	.029	.037		.040	.049	-.071				8
9	.052	.020	.014	.021		.027	.042	-.064				9
10	.049	.026		.019		.027	.029	-.097				10
11	.044	.035		.023		.026						11
12	.047	.040		.036		.033	.032	-.098				12
13	.048	.046	.046	.040		.029	.039					13
14	.050	.041	.047	.036		.039	.037					14
15	.032	.009	.016	.014		.003	.007					15
16	.083	-.050	-.066	-.061		-.084	-.060					16
17		-.030	-.037	-.044		-.050	-.047					17
18		.001	.021	.001		-.002	-.015					18
19	.011	.014	.010	-.003		-.001	-.028					19
20	.028	.021	.014	-.002		-.011	-.037					20
21	.011	.013	.015	.001		-.007	-.041					21
22	-.007	-.007	.007	.003		-.022	-.058					22
						α= 0	δ= -25.0					
1	.859	.785	.729	.588		.735	.594	.827				1
2	.106	.079	.105	.127		.120	.134	.092				2
3	.050	.028	.036	.062		.064	.060	-.027				3
4	.055	.011	.013	.013		.030	.008	-.014				4
5	.035	.001	-.012	-.007		.002	.007	-.012				5
6	.017	-.004	-.014	-.022		-.009	-.009	-.012				6
7	.013	-.007	-.019	-.027		-.021	-.027	.159				7
8	.009	-.021	-.038	-.044		-.046	.194	.191				8
9	.005	-.034	-.047	-.056		-.059	.285	.180				9
10	-.007	-.032		-.050		.209	.300	.188				10
11	-.007	-.021		-.045		.282						11
12	-.002	-.015		.237		.294	.302	.145				12
13	-.014	-.007	-.021	.300		.300	.295					13
14	-.007	-.014	.290	.318		.307	.289					14
15	-.012	.197	.322	.330		.305	.274					15
16	.028	.262	.302	.280		.266	.265					16
17		.195	.282	.312		.282	.273					17
18		.284	.330	.354		.317	.277					18
19	.325	.630	.429	.344		.307	.270					19
20	.405	.726	.722	.491		.376	.292					20
21	.400	.660	.822	.700		.460	.309					21
22	.383	.488	.570	.603		.422	.242					22

Table 11 Continued

Pressure coefficients on swept wing

Configuration 2 M= 1.61 R= 3.6 x 10^6

Orif	Station 1	2	3	4	24	5	6	7	8	9	10	Orif
					α= 0		δ= -20.0					
1	.856	.788	.728	.589		.731	.601	.821				1
2	.102	.082	.109	.131		.124	.138	.092				2
3	.046	.027	.036	.062		.066	.061	-.031				3
4	.052	.008	.017	.017		.032	.012	-.017				4
5	.034	.001	-.006	-.003		.005	.007	-.011				5
6	.017	-.002	-.008	-.020		-.007	-.007	-.023				6
7	.010	-.005	-.017	-.024		-.017	-.026	-.009				7
8	.010	-.023	-.035	-.040		-.042	-.039	-.031				8
9	.002	-.034	-.043	-.054		-.055	-.044	-.019				9
10	-.006	-.029		-.050		-.054	-.052	.065				10
11	-.008	-.021		-.045		-.050						11
12	-.002	-.014		-.038		-.024	.203	.138				12
13	-.014	-.008	-.025	-.027		.202	.237					13
14	-.007	-.012	-.009	.214		.250	.261					14
15	-.013	-.010	.226	.276		.283	.269					15
16	.022	.152	.259	.278		.268	.272					16
17		.132	.249	.284		.275	.265					17
18		.224	.265	.282		.284	.272					18
19	.203	.500	.423	.351		.316	.284					19
20	.281	.517	.571	.480		.407	.336					20
21	.303	.474	.599	.583		.488	.364					21
22	.268	.365	.446	.463		.408	.306					22
					α= 0		δ= -10.0					
1	.858	.784	.731	.600		.732	.619	.838				1
2	.107	.087	.116	.139		.134	.149	.098				2
3	.052	.029	.042	.070		.069	.065	-.036				3
4	.057	.014	.019	.024		.037	.020	-.008				4
5	.039	.005	-.001	.003		.012	.016	-.006				5
6	.020	.001	-.003	-.012		.000	-.001	-.018				6
7	.014	-.001	-.013	-.020		-.009	-.017	-.008				7
8	.011	-.018	-.032	-.035		-.039	-.031	-.026				8
9	.006	-.031	-.040	-.048		-.052	-.035	-.018				9
10	-.003	-.025		-.043		-.050	-.048	-.044				10
11	-.003	-.018		-.042		-.047						11
12	-.001	-.010		-.033		-.040	-.046	-.065				12
13	-.012	-.005	-.021	-.028		-.040	-.046					13
14	-.006	-.008	-.019	-.030		-.036	-.046					14
15	-.016	-.037	-.036	-.042		-.051	-.021					15
16	.035	.044	.019	.060		.053	.064					16
17		.052	.050	.070		.072	.077					17
18		.119	.109	.098		.089	.109					18
19	.084	.204	.235	.218		.185	.181					19
20	.113	.205	.247	.250		.225	.207					20
21	.141	.191	.245	.258		.243	.209					21
22	.117	.141	.188	.205		.186	.158					22
					α= 0		δ= - 5.0					
1	.856	.784	.729	.599		.729	.630	.848				1
2	.104	.083	.117	.141		.133	.159	.106				2
3	.050	.027	.041	.064		.070	.070	-.035				3
4	.054	.013	.020	.021		.036	.029	-.004				4
5	.035	.004	-.003	.003		.012	.022	-.004				5
6	.016	-.002	-.005	-.014		.001	.007	-.012				6
7	.014	-.003	-.012	-.020		-.008	-.010	-.006				7
8	.008	-.018	-.032	-.035		-.033	-.024	-.026				8
9	.002	-.033	-.042	-.049		-.045	-.030	-.016				9
10	-.002	-.028		-.043		-.045	-.040	-.043				10
11	-.003	-.021		-.040		-.041						11
12	-.003	-.010		-.032		-.035	-.037	-.053				12
13	-.012	-.006	-.021	-.030		-.035	-.039					13
14	-.005	-.008	-.017	-.028		-.032	-.039					14
15	-.017	-.042	-.038	-.043		-.059	-.048					15
16	.028	-.025	-.045	-.036		-.050	-.030					16
17		-.016	-.018	-.022		-.026	-.028					17
18		.050	.053	.032		.012	.010					18
19	.025	.085	.091	.075		.064	.038					19
20	.051	.084	.094	.086		.069	.043					20
21	.056	.072	.096	.090		.075	.045					21
22	.026	.037	.071	.072		.053	.026					22

Table 11 Continued

Pressure coefficients on swept wing

Configuration 2 M= 1.61 R= 3.6 x 10^6

Orif	Station 1	2	3	4	24	5	6	7	8	9	10	Orif
					α= 0		δ= 0.0					
1	.856	.791	.730	.595		.727	.630	.856				1
2	.107	.084	.112	.139		.135	.162	.104				2
3	.053	.025	.040	.067		.070	.071	-.035				3
4	.059	.016	.019	.023		.035	.029	-.007				4
5	.039	.004	-.004	.005		.010	.024	-.002				5
6	.021	.001	-.003	-.014		.002	.008	-.014				6
7	.016	-.001	-.012	-.018		-.008	-.010	-.006				7
8	.008	-.016	-.033	-.035		-.033	-.024	-.023				8
9	.004	-.032	-.041	-.050		-.046	-.031	-.017				9
10	.002	-.027		-.043		-.043	-.041	-.044				10
11	-.003	-.020		-.042		-.039						11
12	.000	-.014		-.032		-.034	-.037	-.049				12
13	-.010	-.007	-.018	-.028		-.035	-.038					13
14	-.003	-.010	-.016	-.028		-.031	-.039					14
15	-.016	-.042	-.038	-.049		-.059	-.052					15
16	.036	-.046	-.065	-.061		-.076	-.050					16
17		-.033	-.038	-.046		-.055	-.048					17
18		-.019	-.012	-.019		-.039	-.047					18
19	-.009	-.014	-.018	-.026		-.037	-.048					19
20	.007	-.007	-.019	-.021		-.034	-.049					20
21	-.009	-.008	-.012	-.020		-.030	-.051					21
22	-.040	-.025	-.021	-.021		-.041	-.054					22
					α= 0		δ= 5.0					
1	.856	.790	.726	.599		.726	.638	.861				1
2	.105	.087	.115	.142		.136	.163	.104				2
3	.051	.029	.042	.065		.072	.073	-.036				3
4	.053	.014	.020	.025		.038	.035	-.002				4
5	.036	.005	-.003	.005		.013	.027	-.001				5
6	.017	-.002	-.004	-.010		.003	.010	-.010				6
7	.012	-.001	-.011	-.015		-.006	-.007	-.005				7
8	.005	-.018	-.032	-.032		-.031	-.022	-.021				8
9	.003	-.029	-.040	-.043		-.045	-.027	-.013				9
10	-.001	-.026		-.040		-.041	-.035	-.039				10
11	-.009	-.017		-.037		-.039						11
12	-.008	-.012		-.030		-.033	-.034	-.050				12
13	-.006	-.005	-.019	-.028		-.033	-.035					13
14	-.004	-.008	-.015	-.026		-.029	-.035					14
15	-.015	-.040	-.036	-.044		-.057	-.048					15
16	-.010	-.018	-.031	-.026		-.039	-.038					16
17		-.001	-.003	-.007		-.017	-.016					17
18		-.096	-.095	-.095		-.111	-.120					18
19	-.055	-.102	-.105	-.109		-.119	-.125					19
20	-.064	-.091	-.104	-.106		-.113	-.127					20
21	-.078	-.078	-.099	-.103		-.111	-.126					21
22	-.120	-.085	-.105	-.106		-.117	-.125					22
					α= 0		δ= 10.0					
1	.861	.788	.729	.601		.729	.647	.869				1
2	.106	.087	.116	.145		.144	.172	.108				2
3	.050	.030	.042	.067		.074	.079	-.033				3
4	.056	.016	.024	.027		.045	.042	.002				4
5	.038	.005	-.001	.006		.015	.035	.007				5
6	.019	.000	-.003	-.010		.007	.021	-.007				6
7	.017	-.001	-.009	-.013		-.004	.000	-.002				7
8	.010	-.015	-.030	-.032		-.026	-.015	-.020				8
9	.005	-.030	-.039	-.043		-.037	-.021	-.011				9
10	.001	-.023		-.038		-.035	-.031	-.035				10
11	-.004	-.017		-.035		-.034						11
12	-.004	-.010		-.026		-.026	-.028	-.050				12
13	.001	-.004	-.017	-.023		-.027	-.028					13
14	.000	-.007	-.016	-.022		-.021	-.029					14
15	-.011	-.035	-.034	-.033		-.037	.000					15
16	.000	.034	.039	.080		.074	.089					16
17		.060	.069	.093		.098	.102					17
18		-.166	-.174	-.168		-.173	-.181					18
19	-.070	-.180	-.183	-.181		-.186	-.191					19
20	-.134	-.171	-.183	-.179		-.183	-.192					20
21	-.148	-.148	-.177	-.177		-.179	-.192					21
22	-.172	-.140	-.183	-.181		-.183	-.194					22

Table 11 Continued

Pressure coefficients on swept wing

Configuration 2 M= 1.61 R=3.6 x 10^6

Orif	Station 1	2	3	4	24	5	6	7	8	9	10	Orif
					α= 0		δ= 20.0					
1	.862	.785	.729	.609		.729	.649	.869				1
2	.105	.092	.123	.155		.153	.181	.111				2
3	.056	.035	.048	.072		.085	.080	-.037				3
4	.059	.021	.026	.034		.051	.050	.008				4
5	.042	.010	.005	.011		.026	.042	.007				5
6	.022	.006	.004	-.006		.013	.026	-.005				6
7	.018	.006	-.007	-.008		.005	.006	-.002				7
8	.012	-.011	-.022	-.024		-.019	-.007	-.018				8
9	.004	-.023	-.034	-.037		-.034	-.011	-.011				9
10	.004	-.019		-.034		-.030	-.022	-.031				10
11	-.003	-.011		-.032		-.027						11
12	-.001	-.003		-.023		-.022	-.020	-.015				12
13	.004	.003	-.009	-.019		-.021	-.019					13
14	.004	-.002	-.010	-.017		-.011	.001					14
15	-.007	-.023	.090	.183		.215	.221					15
16	.024	.124	.202	.240		.246	.234					16
17		.125	.208	.246		.262	.254					17
18		-.293	-.303	-.297		-.303	-.307					18
19	-.217	-.315	-.319	-.316		-.318	-.318					19
20	-.255	-.313	-.319	-.318		-.316	-.321					20
21	-.243	-.302	-.317	-.317		-.316	-.319					21
22	-.243	-.263	-.318	-.318		-.315	-.318					22
					α= 3		δ= 0.0					
1	.881	.787	.732	.406		.746	.474	.841				1
2	.051	-.032	-.040	-.044		-.049	-.041	-.016				2
3	-.023	-.036	-.045	-.031		-.042	-.037	-.025				3
4	-.001	-.051	-.064	-.068		-.061	-.067	-.070				4
5	-.016	-.059	-.067	-.077		-.064	-.076	-.051				5
6	-.031	-.057	-.078	-.089		-.079	-.086	-.067				6
7	-.035	-.057	-.080	-.088		-.093	-.100	-.063				7
8	-.043	-.070	-.093	-.104		-.110	-.106	-.079				8
9	-.048	-.078	-.098	-.115		-.120	-.107	-.077				9
10	-.053	-.076		-.112		-.118	-.117	-.094				10
11	-.057	-.069		-.108		-.113						11
12	-.055	-.063		-.096		-.107	-.116	-.142				12
13	-.056	-.055	-.075	-.093		-.112	-.118					13
14	-.050	-.057	-.072	-.088		-.106	-.120					14
15	-.064	-.085	-.089	-.100		-.130	-.120					15
16	-.059	-.056	-.072	-.065		-.089	-.061					16
17		-.033	-.040	-.047		-.058	-.050					17
18		-.060	-.055	-.066		-.099	-.119					18
19	-.046	-.055	-.060	-.069		-.099	-.110					19
20	-.021	-.048	-.058	-.067		-.087	-.104					20
21	-.052	-.042	-.050	-.064		-.084	-.098					21
22	-.086	-.061	-.062	-.070		-.090	-.096					22
					α= 6		δ= -30.0					
1	.891	.752	.616	.183		.760	.258	.944				1
2	.000	-.149	-.170	-.183		-.200	-.211	-.171				2
3	-.093	-.144	-.159	-.162		-.186	-.190	-.178				3
4	-.057	-.125	-.177	-.185		-.193	-.205	-.096				4
5	-.067	-.130	-.185	-.190		-.192	-.186	.021				5
6	-.083	-.125	-.183	-.199		-.194	.054	.058				6
7	-.086	-.118	-.165	-.201		-.203	.084	.044				7
8	-.097	-.129	-.168	-.214		-.011	.098	.033				8
9	-.098	-.137	-.174	-.223		.069	.102	.038				9
10	-.105	-.129		-.213		.087	.089	.062				10
11	-.108	-.127		.047		.088						11
12	-.108	-.122		.089		.085	.066	.062				12
13	-.108	-.114	.077	.102		.077	.059					13
14	-.103	-.112	.158	.121		.079	.057					14
15	-.108	.155	.187	.119		.038	.046					15
16	-.070	.168	.122	.035		.021	.034					16
17		.196	.289	.162		-.120	.071					17
18		.174	.239	.202		.094	.056					18
19	.245	.448	.240	.126		.055	.078					19
20	.350	.711	.510	.237		.061	.074					20
21	.341	.654	.822	.432		.097	.069					21
22	.318	.478	.583	.549		.062	-.006					22

Table 11 Continued

Pressure coefficients on swept wing

Configuration 2 M= 1.61 R= 3.6 x 10^6

Orif	Station 1	2	3	4	24	5	6	7	8	9	10	Orif
					α= 6	δ= -20.0						
1	.890	.748	.614	.189		.755	.266	.939				1
2	-.003	-.150	-.170	-.184		-.197	-.203	-.160				2
3	-.094	-.145	-.162	-.163		-.184	-.182	-.163				3
4	-.060	-.124	-.177	-.183		-.191	-.202	-.194				4
5	-.068	-.132	-.183	-.187		-.193	-.199	-.191				5
6	-.088	-.125	-.184	-.199		-.192	-.201	-.189				6
7	-.092	-.119	-.166	-.204		-.202	-.211	-.227				7
8	-.098	-.131	-.168	-.214		-.216	-.218	-.276				8
9	-.104	-.139	-.177	-.227		-.222	-.220	-.333				9
10	-.106	-.133		-.218		-.220	-.225	-.334				10
11	-.110	-.129		-.208		-.218						11
12	-.111	-.123		-.187		-.115	-.047	-.296				12
13	-.110	-.115	-.144	-.128		-.018	-.015					13
14	-.104	-.115	-.092	.035		.035	.028					14
15	-.113	-.035	.095	.094		.062	.049					15
16	-.102	.079	.119	.097		.053	.047					16
17		.078	.125	.099		.019	.062					17
18		.097	.116	.109		.070	.064					18
19	.072	.277	.205	.120		.060	.073					19
20	.133	.338	.315	.201		.078	.092					20
21	.159	.317	.380	.276		.106	.099					21
22	.134	.231	.306	.262		.064	.043					22
					α= 6	δ= -10.0						
1	.891	.748	.619	.195		.757	.274	.915				1
2	-.006	-.153	-.170	-.180		-.191	-.192	-.146				2
3	-.093	-.144	-.159	-.159		-.177	-.175	-.148				3
4	-.058	-.125	-.177	-.179		-.185	-.196	-.189				4
5	-.073	-.130	-.184	-.185		-.189	-.191	-.189				5
6	-.086	-.126	-.183	-.194		-.189	-.196	-.180				6
7	-.088	-.120	-.165	-.198		-.199	-.207	-.203				7
8	-.100	-.127	-.168	-.210		-.209	-.213	-.248				8
9	-.106	-.138	-.175	-.222		-.217	-.215	-.297				9
10	-.105	-.130		-.214		-.217	-.223	-.332				10
11	-.111	-.126		-.206		-.214						11
12	-.110	-.121		-.183		-.213	-.213	-.325				12
13	-.109	-.116	-.140	-.173		-.213	-.212					13
14	-.105	-.114	-.137	-.166		-.207	-.215					14
15	-.113	-.134	-.134	-.140		-.181	-.131					15
16	-.133	-.016	-.018	-.016		-.055	-.054					16
17		-.002	-.002	-.013		-.038	-.033					17
18		.016	.018	-.005		-.045	-.065					18
19	-.007	.073	.074	.041		-.021	-.046					19
20	.007	.086	.092	.067		.001	-.012					20
21	.027	.075	.102	.080		.015	.002					21
22	.011	.034	.064	.051		-.013	-.021					22
					α= 6	δ= - 5.0						
1	.887	.744	.620	.199		.759	.282	.899				1
2	-.004	-.151	-.169	-.177		-.189	-.189	-.134				2
3	-.092	-.145	-.158	-.156		-.176	-.172	-.135				3
4	-.059	-.122	-.177	-.181		-.183	-.190	-.181				4
5	-.068	-.130	-.183	-.184		-.185	-.187	-.181				5
6	-.085	-.123	-.181	-.193		-.186	-.191	-.169				6
7	-.088	-.118	-.161	-.198		-.194	-.201	-.187				7
8	-.096	-.129	-.167	-.209		-.205	-.208	-.222				8
9	-.104	-.137	-.171	-.221		-.218	-.212	-.268				9
10	-.104	-.130		-.210		-.214	-.219	-.313				10
11	-.109	-.126		-.206		-.212						11
12	-.107	-.120		-.179		-.208	-.210	-.312				12
13	-.109	-.111	-.140	-.173		-.212	-.209					13
14	-.103	-.115	-.134	-.166		-.204	-.210					14
15	-.112	-.136	-.149	-.163		-.210	-.173					15
16	-.123	-.073	-.082	-.081		-.111	-.087					16
17		-.043	-.051	-.062		-.077	-.064					17
18		-.053	-.049	-.087		-.146	-.174					18
19	-.055	-.033	-.039	-.076		-.135	-.165					19
20	-.038	-.028	-.039	-.066		-.126	-.146					20
21	-.042	-.038	-.033	-.060		-.114	-.135					21
22	-.075	-.061	-.047	-.065		-.124	-.137					22

Table 11 Continued

Pressure coefficients on swept wing

Configuration 2 M= 1.61 R= 3.6 x 10^6

Orif	Station 1	2	3	4	24	5	6	7	8	9	10	Orif
					α= 6		δ= 0.0					
1	.894	.741	.616	.195		.759	.283	.898				1
2	-.001	-.141	-.152	-.167		-.169	-.173	-.125				2
3	-.087	-.137	-.150	-.149		-.161	-.159	-.122				3
4	-.054	-.120	-.169	-.172		-.170	-.174	-.163				4
5	-.066	-.124	-.176	-.171		-.172	-.171	-.168				5
6	-.081	-.120	-.174	-.184		-.175	-.181	-.159				6
7	-.084	-.113	-.161	-.187		-.186	-.190	-.169				7
8	-.098	-.122	-.162	-.193		-.196	-.192	-.205				8
9	-.101	-.133	-.167	-.205		-.206	-.194	-.238				9
10	-.098	-.125		-.195		-.202	-.205	-.270				10
11	-.106	-.120		-.193		-.197						11
12	-.106	-.114		-.176		-.195	-.195	-.280				12
13	-.104	-.106	-.133	-.165		-.196	-.196					13
14	-.098	-.107	-.129	-.156		-.194	-.199					14
15	-.109	-.131	-.145	-.164		-.205	-.170					15
16	-.126	-.072	-.069	-.068		-.097	-.080					16
17		-.038	-.044	-.054		-.068	-.062					17
18		-.108	-.111	-.127		-.187	-.196					18
19	-.068	-.103	-.115	-.134		-.188	-.190					19
20	-.082	-.098	-.113	-.131		-.173	-.177					20
21	-.102	-.091	-.109	-.123		-.163	-.172					21
22	-.130	-.106	-.112	-.128		-.162	-.163					22
					α= 6		δ= 5.0					
1	.889	.740	.616	.201		.759	.283	.889				1
2	-.007	-.154	-.169	-.179		-.185	-.188	-.133				2
3	-.096	-.147	-.161	-.158		-.176	-.169	-.131				3
4	-.060	-.128	-.177	-.177		-.183	-.188	-.177				4
5	-.070	-.130	-.186	-.184		-.185	-.183	-.181				5
6	-.086	-.125	-.182	-.192		-.185	-.188	-.168				6
7	-.090	-.118	-.165	-.196		-.194	-.198	-.179				7
8	-.101	-.129	-.165	-.207		-.205	-.207	-.212				8
9	-.102	-.138	-.172	-.219		-.217	-.210	-.260				9
10	-.102	-.130		-.211		-.214	-.218	-.301				10
11	-.108	-.127		-.205		-.208						11
12	-.107	-.120		-.183		-.206	-.207	-.310				12
13	-.106	-.114	-.135	-.172		-.211	-.205					13
14	-.103	-.115	-.133	-.164		-.204	-.208					14
15	-.112	-.136	-.132	-.112		-.139	-.086					15
16	-.105	-.038	-.004	.003		-.029	-.029					16
17		.010	.021	.017		.007	.004					17
18		-.188	-.189	-.205		-.252	-.257					18
19	-.129	-.192	-.198	-.215		-.260	-.261					19
20	-.164	-.183	-.196	-.211		-.248	-.250					20
21	-.175	-.173	-.194	-.207		-.237	-.247					21
22	-.194	-.170	-.194	-.211		-.235	-.239					22
					α= 6		δ= 10.0					
1	.890	.743	.618	.202		.760	.294	.879				1
2	-.007	-.153	-.165	-.176		-.182	-.180	-.124				2
3	-.093	-.146	-.158	-.154		-.167	-.163	-.123				3
4	-.058	-.124	-.177	-.177		-.177	-.184	-.173				4
5	-.070	-.129	-.183	-.182		-.179	-.180	-.167				5
6	-.088	-.125	-.181	-.188		-.179	-.182	-.159				6
7	-.091	-.118	-.163	-.193		-.189	-.195	-.163				7
8	-.100	-.126	-.163	-.205		-.203	-.203	-.191				8
9	-.105	-.138	-.170	-.216		-.214	-.205	-.234				9
10	-.100	-.127		-.207		-.214	-.212	-.279				10
11	-.110	-.126		-.200		-.211						11
12	-.108	-.121		-.177		-.208	-.203	-.299				12
13	-.105	-.111	-.138	-.166		-.210	-.201					13
14	-.105	-.112	-.134	-.163		-.202	-.202					14
15	-.110	-.133	-.055	.007		-.011	.017					15
16	-.067	-.001	.050	.060		.025	.032					16
17		.055	.131	.176		.186	.177					17
18		-.260	-.261	-.274		-.307	-.319					18
19	-.177	-.268	-.276	-.284		-.322	-.318					19
20	-.241	-.263	-.273	-.282		-.310	-.314					20
21	-.247	-.249	-.269	-.278		-.305	-.307					21
22	-.244	-.229	-.268	-.283		-.302	-.305					22

Table 11 Continued

Pressure coefficients on swept wing

Configuration 2 M=1.61 R=3.6 x 10^6

Orif	Station 1	2	3	4	24	5	6	7	8	9	10	Orif
					α= 6		δ= 15.0					
1	.889	.745	.620	.207		.754	.299	.865				1
2	-.007	-.149	-.164	-.172		-.177	-.175	-.114				2
3	-.094	-.147	-.155	-.150		-.165	-.158	-.115				3
4	-.059	-.124	-.172	-.174		-.176	-.175	-.177				4
5	-.069	-.130	-.182	-.178		-.178	-.173	-.159				5
6	-.085	-.124	-.180	-.192		-.179	-.177	-.159				6
7	-.092	-.118	-.160	-.192		-.188	-.191	-.154				7
8	-.102	-.125	-.165	-.204		-.198	-.198	-.180				8
9	-.105	-.135	-.171	-.217		-.209	-.203	-.213				9
10	-.102	-.130		-.207		-.207	-.209	-.260				10
11	-.112	-.126		-.198		-.204						11
12	-.108	-.118		-.177		-.204	-.201	-.271				12
13	-.106	-.112	-.135	-.166		-.206	-.197					13
14	-.102	-.112	-.131	-.158		-.191	-.186					14
15	-.108	-.118	.021	.047		.026	.044					15
16	-.056	.039	.075	.091		.049	.057					16
17		.090	.120	.068		.250	.263					17
18		-.318	-.327	-.333		-.361	-.371					18
19	-.248	-.330	-.340	-.345		-.373	-.371					19
20	-.310	-.327	-.339	-.348		-.365	-.369					20
21	-.280	-.318	-.335	-.343		-.361	-.365					21
22	-.263	-.285	-.336	-.345		-.358	-.359					22
					α= 9		δ= 0.0					
1	.925	.481	.439	.006		.742	.152	.990				1
2	-.050	-.218	-.226	-.247		-.252	-.261	-.242				2
3	-.138	-.217	-.223	-.229		-.238	-.245	-.245				3
4	-.092	-.206	-.235	-.240		-.242	-.253	-.249				4
5	-.104	-.172	-.248	-.243		-.245	-.246	-.299				5
6	-.122	-.168	-.243	-.248		-.248	-.252	-.326				6
7	-.122	-.158	-.240	-.248		-.248	-.261	-.333				7
8	-.137	-.166	-.245	-.253		-.263	-.255	-.345				8
9	-.136	-.175	-.230	-.264		-.270	-.254	-.361				9
10	-.137	-.167		-.257		-.262	-.261	-.354				10
11	-.141	-.161		-.256		-.258						11
12	-.143	-.156		-.250		-.256	-.251	-.361				12
13	-.143	-.149	-.175	-.251		-.257	-.251					13
14	-.137	-.147	-.171	-.239		-.251	-.253					14
15	-.146	-.169	-.176	-.178		-.238	-.171					15
16	-.132	-.082	-.070	-.088		-.115	-.104					16
17		-.038	-.050	-.066		-.083	-.074					17
18		-.146	-.153	-.185		-.245	-.244					18
19	-.112	-.141	-.159	-.186		-.250	-.238					19
20	-.126	-.137	-.152	-.177		-.238	-.227					20
21	-.139	-.128	-.148	-.169		-.235	-.216					21
22	-.162	-.134	-.150	-.172		-.232	-.213					22
					α= 12		δ= -30.0					
1	.964	.260	.181	-.232		.632	-.028	.846				1
2	-.105	-.310	-.331	-.355		-.371	-.405	-.417				2
3	-.187	-.302	-.319	-.331		-.351	-.376	-.446				3
4	-.147	-.307	-.323	-.333		-.348	-.367	-.458				4
5	-.156	-.279	-.329	-.333		-.346	-.360	-.457				5
6	-.172	-.237	-.327	-.336		-.341	-.259	-.438				6
7	-.174	-.218	-.327	-.336		-.336	-.175	-.406				7
8	-.183	-.220	-.334	-.341		-.166	-.155	-.359				8
9	-.185	-.226	-.337	-.348		-.131	-.119	-.309				9
10	-.185	-.217		-.257		-.119	-.116	-.259				10
11	-.187	-.212		-.128		-.119						11
12	-.192	-.209		-.092		-.117	-.113	-.205				12
13	-.194	-.200	-.078	-.087		-.119	-.110					13
14	-.186	-.174	-.034	-.080		-.110	-.106					14
15	-.191	.059	-.004	-.116		-.131	-.100					15
16	-.153	.067	-.062	-.135		-.143	-.111					16
17		.052	.016	-.124		-.205	-.143					17
18		.090	.061	-.037		-.092	-.101					18
19	.144	.258	.064	-.108		-.102	-.072					19
20	.210	.462	.330	-.060		-.110	-.064					20
21	.228	.493	.585	.001		-.098	-.062					21
22	.192	.379	.481	-.012		-.122	-.115					22

Table 11 Continued

Pressure coefficients on swept wing

Configuration 2 M= 1.61 R= 3.6 x 10^6

Orif	Station 1	2	3	4	24	5	6	7	8	9	10	Orif
					α= 12		δ= -20.0					
1	.963	.261	.188	-.232		.635	-.018	.850				1
2	-.101	-.305	-.333	-.354		-.372	-.399	-.467				2
3	-.190	-.299	-.315	-.332		-.351	-.367	-.476				3
4	-.140	-.304	-.319	-.333		-.347	-.360	-.495				4
5	-.151	-.276	-.331	-.334		-.343	-.357	-.508				5
6	-.170	-.232	-.325	-.338		-.340	-.353	-.509				6
7	-.171	-.217	-.328	-.337		-.340	-.351	-.502				7
8	-.182	-.219	-.334	-.340		-.347	-.352	-.501				8
9	-.183	-.226	-.337	-.348		-.351	-.352	-.495				9
10	-.184	-.216		-.342		-.350	-.353	-.474				10
11	-.189	-.209		-.343		-.347						11
12	-.189	-.204		-.333		-.263	-.256	-.469				12
13	-.191	-.199	-.248	-.206		-.226	-.229					13
14	-.186	-.198	-.132	-.148		-.170	-.205					14
15	-.191	-.069	-.060	-.112		-.138	-.144					15
16	-.185	.006	-.047	-.108		-.136	-.140					16
17		.008	-.022	-.066		-.135	-.116					17
18		.011	-.039	-.098		-.114	-.121					18
19	.002	.130	.027	-.101		-.118	-.106					19
20	.028	.181	.140	-.077		-.114	-.087					20
21	.053	.178	.224	-.045		-.101	-.080					21
22	.054	.121	.182	-.088		-.129	-.106					22
					α= 12		δ= -10.0					
1	.963	.262	.186	-.224		.641	-.011	.859				1
2	-.103	-.309	-.329	-.351		-.369	-.393	-.456				2
3	-.181	-.300	-.316	-.326		-.348	-.364	-.466				3
4	-.144	-.306	-.312	-.330		-.344	-.359	-.406				4
5	-.152	-.274	-.324	-.330		-.339	-.354	-.506				5
6	-.169	-.233	-.324	-.335		-.336	-.347	-.502				6
7	-.169	-.217	-.322	-.336		-.336	-.348	-.498				7
8	-.179	-.220	-.330	-.337		-.344	-.353	-.497				8
9	-.184	-.224	-.334	-.346		-.350	-.351	-.488				9
10	-.185	-.216		-.338		-.348	-.349	-.468				10
11	-.190	-.211		-.338		-.347						11
12	-.189	-.205		-.333		-.342	-.345	-.467				12
13	-.191	-.198	-.243	-.330		-.341	-.342					13
14	-.184	-.197	-.233	-.330		-.334	-.343					14
15	-.191	-.208	-.170	-.213		-.300	-.235					15
16	-.185	-.082	-.101	-.163		-.198	-.185					16
17		-.050	-.086	-.123		-.155	-.132					17
18		-.069	-.095	-.174		-.222	-.236					18
19	-.084	-.027	-.063	-.162		-.217	-.219					19
20	-.059	-.019	-.045	-.144		-.213	-.200					20
21	-.056	-.028	-.024	-.133		-.208	-.191					21
22	-.071	-.056	-.034	-.161		-.215	-.191					22
					α= 12		δ= - 5.0					
1	.962	.262	.193	-.222		.641	-.006	.863				1
2	-.105	-.306	-.325	-.353		-.366	-.389	-.449				2
3	-.187	-.299	-.316	-.329		-.344	-.356	-.453				3
4	-.141	-.303	-.320	-.328		-.342	-.351	-.476				4
5	-.154	-.275	-.324	-.333		-.339	-.349	-.493				5
6	-.170	-.227	-.323	-.334		-.335	-.343	-.498				6
7	-.171	-.211	-.323	-.334		-.335	-.346	-.495				7
8	-.180	-.217	-.333	-.336		-.342	-.349	-.495				8
9	-.182	-.225	-.335	-.348		-.349	-.351	-.488				9
10	-.185	-.213		-.338		-.345	-.348	-.466				10
11	-.189	-.207		-.338		-.341						11
12	-.188	-.203		-.332		-.336	-.342	-.461				12
13	-.189	-.198	-.246	-.332		-.333	-.341					13
14	-.183	-.195	-.234	-.328		-.329	-.340					14
15	-.191	-.211	-.196	-.261		-.275	-.213					15
16	-.177	-.105	-.120	-.175		-.182	-.172					16
17		-.051	-.092	-.110		-.119	-.109					17
18		-.142	-.159	-.268		-.290	-.308					18
19	-.129	-.127	-.161	-.262		-.304	-.304					19
20	-.125	-.125	-.154	-.242		-.308	-.291					20
21	-.132	-.127	-.143	-.223		-.306	-.285					21
22	-.152	-.142	-.144	-.224		-.306	-.282					22

Table 11 Concluded

Pressure coefficients on swept wing

Configuration 2 M=1.61 R=3.6 x 10^6

Orif	Station 1	2	3	4	24	5	6	7	8	9	10	Orif
					α= 12		δ= 0.0					
1	.960	.245	.194	-.199		.642	.006	.857				1
2	-.101	-.291	-.303	-.332		-.333	-.359	-.375				2
3	-.178	-.284	-.300	-.312		-.318	-.334	-.375				3
4	-.140	-.284	-.305	-.317		-.316	-.328	-.379				4
5	-.149	-.262	-.316	-.317		-.317	-.323	-.417				5
6	-.164	-.226	-.313	-.317		-.315	-.324	-.433				6
7	-.166	-.208	-.313	-.317		-.315	-.327	-.435				7
8	-.180	-.213	-.318	-.319		-.328	-.326	-.439				8
9	-.183	-.219	-.317	-.328		-.333	-.325	-.438				9
10	-.182	-.207		-.318		-.326	-.327	-.423				10
11	-.187	-.204		-.321		-.321						11
12	-.186	-.198		-.318		-.321	-.322	-.430				12
13	-.187	-.192	-.236	-.318		-.317	-.320					13
14	-.179	-.191	-.233	-.308		-.314	-.320					14
15	-.186	-.207	-.173	-.231		-.234	-.189					15
16	-.154	-.094	-.107	-.154		-.157	-.157					16
17		-.030	-.052	-.067		-.087	-.092					17
18		-.189	-.210	-.276		-.304	-.310					18
19	-.164	-.181	-.210	-.279		-.316	-.304					19
20	-.164	-.176	-.206	-.262		-.310	-.293					20
21	-.176	-.168	-.198	-.244		-.307	-.289					21
22	-.196	-.176	-.199	-.246		-.307	-.284					22
					α= 12		δ= 5.0					
1	.960	.253	.187	-.221		.644	.002	.864				1
2	-.103	-.306	-.327	-.349		-.359	-.383	-.429				2
3	-.184	-.300	-.318	-.323		-.339	-.356	-.432				3
4	-.144	-.305	-.319	-.328		-.341	-.350	-.445				4
5	-.155	-.277	-.326	-.329		-.335	-.347	-.468				5
6	-.169	-.232	-.322	-.331		-.333	-.344	-.472				6
7	-.173	-.217	-.325	-.331		-.331	-.346	-.470				7
8	-.186	-.219	-.331	-.331		-.340	-.345	-.470				8
9	-.186	-.226	-.333	-.341		-.346	-.345	-.464				9
10	-.186	-.218		-.333		-.344	-.344	-.452				10
11	-.191	-.212		-.334		-.340						11
12	-.189	-.205		-.328		-.336	-.338	-.454				12
13	-.191	-.200	-.241	-.329		-.334	-.337					13
14	-.186	-.196	-.234	-.327		-.330	-.336					14
15	-.189	-.207	-.123	-.177		-.176	-.149					15
16	-.142	-.064	-.094	-.140		-.147	-.127					16
17		.063	.126	.182		.211	.230					17
18		-.255	-.268	-.328		-.348	-.357					18
19	-.204	-.250	-.275	-.343		-.364	-.356					19
20	-.229	-.249	-.268	-.328		-.358	-.346					20
21	-.234	-.237	-.262	-.308		-.358	-.340					21
22	-.250	-.231	-.263	-.296		-.354	-.334					22
					α= 15		δ= 0.0					
1	.991	.123	-.014	-.330		.449	-.166	.718				1
2	-.129	-.347	-.366	-.394		-.407	-.428	-.473				2
3	-.209	-.338	-.358	-.374		-.389	-.405	-.482				3
4	-.169	-.338	-.351	-.368		-.383	-.396	-.493				4
5	-.181	-.329	-.361	-.363		-.375	-.388	-.501				5
6	-.194	-.281	-.357	-.366		-.375	-.387	-.497				6
7	-.194	-.254	-.357	-.363		-.373	-.386	-.486				7
8	-.205	-.250	-.361	-.365		-.381	-.381	-.483				8
9	-.209	-.252	-.366	-.376		-.381	-.382	-.474				9
10	-.215	-.241		-.364		-.377	-.379	-.469				10
11	-.216	-.235		-.362		-.373						11
12	-.215	-.230		-.362		-.368	-.372	-.471				12
13	-.213	-.224	-.287	-.363		-.364	-.372					13
14	-.209	-.222	-.266	-.353		-.358	-.370					14
15	-.213	-.234	-.191	-.243		-.245	-.215					15
16	-.162	-.097	-.183	-.197		-.201	-.184					16
17		.048	.036	.058		.087	.095					17
18		-.219	-.247	-.320		-.339	-.342					18
19	-.184	-.211	-.245	-.329		-.348	-.336					19
20	-.185	-.203	-.241	-.319		-.341	-.323					20
21	-.196	-.195	-.229	-.298		-.340	-.319					21
22	-.215	-.192	-.229	-.274		-.338	-.318					22

Table 12

Pressure coefficients on swept wing

Configuration 3 M=1.61 R=3.6 x 10^6

Orif	Station 1	2	3	4	24	5	6	7	8	9	10	Orif
					α=-15		δ= 0.0					
1	.574	.656	.620	.476		-.178	.394	-.246				1
2	.462	.587	.648	.656		.695	.709	.462				2
3	.461	.511	.594	.595		.630	.681	.418				3
4	.439	.470	.545	.567		.585	.627	.317				4
5	.414	.457	.494	.527		.548	.605	.234				5
6	.397	.455	.467	.497		.526	.586	.205				6
7	.405	.422	.443	.467		.503	.575	.183				7
8	.429	.409	.409	.457		.491	.578	.165				8
9	.420	.387	.418	.445		.498		.132				9
10	.400	.403		.448		.499	.551	.111				10
11	.405	.404		.456		.507						11
12	.409	.411		.461		.501	.513	.024				12
13	.394	.410	.425	.444		.481	.475	-.004				13
14	.394	.390	.389	.407		.457	.423	-.150				14
15	.402	.327	.320	.337		.367	.333	-.161				15
16	.533	.015	.096	.129		.328	.336	.006				16
17		.007	-.028	-.024								17
18		.390	.422	.344		.260	.185	-.121				18
19	.191	.148	.162	.148	.117	.201	.155	-.132				19
20	.218	.172	.177	.225	.234	.191	.156	-.122				20
21	.221	.214	.192	.327	.318	.206	.169	-.109				21
22	.200	.229	.256	.234	.238	.248	.177	-.086				22
					α=-12		δ= -30.0					
1	.702	.694	.714	.620		.104	.658	-.144				1
2	.424	.487	.517	.516		.553	.708	.446				2
3	.362	.413	.442	.446		.477	.699	.405				3
4	.346	.347	.398	.413		.441	.681	.311				4
5	.320	.325	.351	.381		.404	.669	.230				5
6	.295	.305	.330	.349		.495	.642	.204				6
7	.284	.286	.301	.311		.652	.637	.183				7
8	.281	.263	.262	.289		.680	.633	.168				8
9	.280	.247	.261	.536		.690	.625	.135				9
10	.258	.257		.687		.690	.596	.115				10
11	.263	.263		.741		.682						11
12	.273	.274		.767		.657	.547	.029				12
13	.261	.325	.740	.781		.618	.510	-.001				13
14	.263	.652	.784	.781		.570	.465	-.158				14
15	.319	.738	.798	.762		.485	.400	-.165				15
16	.497	.725	.765	.686		.468	.386	.001				16
17		.048	.134	.347								17
18		.749	.776	.673		.379	.194	-.128				18
19	.983	1.163	1.036	.597	-.211	.355	.245	-.116				19
20	.895	1.052	1.023	.545	-.196	.319	.248	-.086				20
21	.811	.951	.935	.463	-.295	.279	.233	-.071				21
22	.655	.689	.658	.191	-.267	.204	.196	-.064				22
					α=-12		δ= -20.0					
1	.703	.693	.711	.621		.099	.620	.142				1
2	.424	.488	.515	.522		.557	.573	.370				2
3	.361	.412	.440	.451		.481	.520	.297				3
4	.346	.347	.396	.418		.446	.460	.244				4
5	.321	.328	.354	.385		.407	.433	.183				5
6	.298	.307	.332	.352		.373	.408	.164				6
7	.287	.291	.301	.315		.354	.377	.150				7
8	.283	.267	.263	.292		.324	.503	.144				8
9	.280	.249	.262	.297		.334	.557	.118				9
10	.259	.261		.319		.347	.558	.105				10
11	.264	.267		.326		.525						11
12	.273	.276		.332		.583	.536	.030				12
13	.260	.283	.314	.530		.583	.505	.006				13
14	.264	.276	.329	.658		.556	.465	-.147				14
15	.273	.236	.573	.726		.473	.397	-.157				15
16	.420	.243	.617	.787		.454	.388	.008				16
17		.271	.409	.488								17
18		.829	.867	.780		.361	.200	-.114				18
19	.502	.806	.926	.519	-.081	.367	.258	-.114				19
20	.586	.744	.806	.404	.236	.352	.271	-.072				20
21	.554	.713	.759	.366	-.223	.334	.264	-.049				21
22	.489	.567	.574	.178	-.146	.284	.227	-.040				22

Table 12 Continued

Pressure coefficients on swept wing

Configuration 3 M=1.61 R=3.6 x 10^6

Orif	Station 1	2	3	4	24	5	6	7	8	9	10	Orif
					α=-12		δ= -10.0					
1	.697	.689	.706	.617		.077	.615	.111				1
2	.425	.492	.522	.527		.565	.584	.371				2
3	.367	.418	.445	.458		.489	.532	.268				3
4	.353	.351	.402	.424		.454	.475	.187				4
5	.328	.331	.359	.390		.417	.449	.128				5
6	.302	.310	.336	.359		.381	.420	.095				6
7	.291	.291	.308	.323		.366	.383	.078				7
8	.291	.270	.269	.302		.340	.389	.072				8
9	.286	.251	.269	.310		.348	.390	.046				9
10	.265	.262		.329		.349	.386	.033				10
11	.269	.269		.335		.353						11
12	.280	.280		.333		.359	.376	-.031				12
13	.268	.288	.323	.327		.349	.363	-.055				13
14	.270	.281	.293	.304		.336	.336	-.167				14
15	.278	.236	.236	.250		.262	.247	-.194				15
16	.423	-.014	.039	.275		.249	.253	-.029				16
17		.038	.026	.069								17
18		.602	.669	.599		.207	.132	-.147				18
19	.265	.393	.469	.311	.249	.186	.104	-.167				19
20	.343	.381	.431	.275	.300	.216	.098	-.150				20
21	.371	.380	.419	.237	.192	.228	.133	-.137				21
22	.231	.350	.377	.116	-.019	.219	.179	-.086				22
					α=-12		δ= - 5.0					
1	.696	.690	.709	.617		.076	.617	.106				1
2	.425	.495	.524	.530		.567	.586	.372				2
3	.365	.419	.447	.461		.492	.534	.268				3
4	.351	.354	.404	.424		.455	.476	.189				4
5	.328	.333	.357	.394		.418	.449	.128				5
6	.304	.312	.336	.361		.385	.423	.093				6
7	.291	.294	.308	.323		.370	.385	.076				7
8	.291	.272	.270	.305		.341	.390	.071				8
9	.287	.253	.267	.311		.350	.391	.046				9
10	.264	.265		.330		.351	.389	.032				10
11	.269	.271		.338		.357						11
12	.281	.283		.335		.361	.380	-.032				12
13	.268	.291	.324	.330		.353	.366	-.053				13
14	.270	.282	.293	.308		.337	.336	-.170				14
15	.279	.237	.236	.250		.252	.245	-.197				15
16	.421	-.028	.039	.109		.216	.246	-.039				16
17		-.010	-.036	-.039								17
18		.434	.470	.368		.162	.114	-.151				18
19	.171	.220	.247	.160	.105	.105	.082	-.176				19
20	.225	.213	.235	.206	.222	.101	.063	-.170				20
21	.248	.233	.236	.146	.186	.127	.061	-.156				21
22	.157	.223	.233	.088	-.026	.158	.076	-.131				22
					α=-12		δ= 0.0					
1	.693	.689	.709	.613		.084	.617	.120				1
2	.424	.492	.524	.525		.568	.585	.368				2
3	.361	.417	.446	.456		.491	.532	.267				3
4	.348	.351	.404	.423		.456	.473	.181				4
5	.325	.332	.359	.392		.418	.446	.125				5
6	.297	.312	.335	.360		.383	.420	.090				6
7	.288	.292	.307	.322		.369	.382	.071				7
8	.288	.270	.266	.302		.338	.385	.064				8
9	.284	.251	.267	.311		.348	.388	.041				9
10	.262	.262		.329		.347	.383	.026				10
11	.268	.269		.334		.353						11
12	.278	.282		.333		.357	.376	-.034				12
13	.265	.289	.322	.328		.347	.360	-.058				13
14	.269	.281	.293	.305		.333	.333	-.168				14
15	.276	.237	.236	.248		.247	.241	-.200				15
16	.418	-.030	.037	.071		.211	.241	-.040				16
17		-.024	-.054	-.059								17
18		.318	.345	.260		.158	.110	-.151				18
19	.106	.080	.078	.050	.023	.092	.078	-.178				19
20	.133	.079	.088	.092	.099	.082	.058	-.172				20
21	.132	.114	.093	.159	.135	.075	.053	-.161				21
22	.122	.128	.095	.090	.079	.083	.064	-.137				22

Table 12 Continued

Pressure coefficients on swept wing

Configuration 3 M=1.61 R=3.6 x 10^6

Orif	Station 1	2	3	4	24	5	6	7	8	9	10	Orif
					α=-12		δ= 5.0					
1	.693	.688	.709	.615		.075	.614	.103				1
2	.424	.493	.525	.527		.567	.585	.372				2
3	.365	.418	.447	.461		.492	.534	.272				3
4	.353	.354	.405	.426		.458	.476	.189				4
5	.328	.333	.360	.395		.418	.449	.132				5
6	.303	.312	.336	.361		.382	.423	.096				6
7	.291	.294	.310	.327		.371	.386	.078				7
8	.291	.272	.271	.305		.341	.390	.072				8
9	.287	.252	.270	.312		.350	.392	.049				9
10	.263	.265		.333		.351	.389	.035				10
11	.270	.272		.338		.357						11
12	.280	.284		.338		.361	.381	-.028				12
13	.269	.291	.325	.333		.351	.366	-.055				13
14	.271	.282	.295	.309		.338	.336	-.170				14
15	.278	.238	.239	.253		.252	.245	-.194				15
16	.418	-.030	.037	.051		.215	.245	-.034				16
17		-.034	-.064	-.068								17
18		.204	.220	.150		.161	.114	-.153				18
19	.032	-.035	-.040	-.038	-.064	.093	.081	-.174				19
20	.039	-.039	-.032	-.012	.028	.086	.064	-.169				20
21	.011	.001	-.022	.043	.011	.073	.058	-.153				21
22	-.049	.041	-.019	-.062	-.037	.065	.068	-.126				22
					α=-12		δ= 10.0					
1	.696	.690	.710	.617		.074	.615	.099				1
2	.423	.496	.525	.531		.574	.587	.374				2
3	.364	.420	.450	.463		.497	.538	.273				3
4	.353	.356	.405	.428		.463	.479	.191				4
5	.329	.334	.361	.396		.423	.452	.133				5
6	.303	.314	.337	.364		.389	.426	.099				6
7	.291	.295	.308	.327		.376	.389	.080				7
8	.291	.274	.272	.307		.344	.395	.075				8
9	.287	.255	.271	.316		.353	.396	.050				9
10	.266	.267		.334		.353	.391	.035				10
11	.272	.273		.341		.359						11
12	.283	.288		.340		.363	.383	-.027				12
13	.269	.292	.326	.335		.354	.366	-.048				13
14	.273	.284	.297	.311		.339	.338	-.166				14
15	.280	.241	.240	.254		.253	.247	-.192				15
16	.418	-.028	.040	.035		.220	.247	-.030				16
17		-.037	-.069	-.071								17
18		.086	.100	.034		.163	.117	-.146				18
19	-.064	-.146	-.151	-.132	-.092	.092	.083	-.172				19
20	-.075	-.148	-.145	-.102	-.059	.082	.065	-.166				20
21	-.107	-.132	-.138	-.072	-.087	.069	.057	-.151				21
22	-.092	-.048	-.130	-.168	-.126	.055	.069	-.123				22
					α=-12		δ= 20.0					
1	.698	.692	.710	.613		.069	.615	.095				1
2	.425	.496	.528	.528		.570	.591	.376				2
3	.365	.422	.449	.462		.493	.540	.276				3
4	.352	.354	.406	.427		.458	.481	.195				4
5	.329	.335	.361	.397		.421	.456	.135				5
6	.302	.315	.339	.364		.387	.430	.100				6
7	.292	.294	.310	.326		.374	.391	.083				7
8	.292	.273	.272	.308		.345	.399	.076				8
9	.287	.255	.272	.316		.354	.399	.051				9
10	.265	.267		.334		.356	.395	.035				10
11	.272	.274		.340		.361						11
12	.283	.288		.339		.365	.385	-.024				12
13	.269	.293	.329	.334		.355	.371	-.051				13
14	.273	.287	.299	.311		.342	.340	-.165				14
15	.279	.242	.242	.257		.255	.249	-.194				15
16	.414	-.019	.043	.022		.225	.249	-.032				16
17		-.021	-.049	-.049								17
18		-.101	-.089	-.143		.165	.119	-.147				18
19	-.144	-.287	-.291	-.243	-.121	.093	.085	-.172				19
20	-.163	-.291	-.289	-.279	-.115	.083	.066	-.165				20
21	-.215	-.282	-.286	-.291	-.191	.071	.060	-.150				21
22	-.202	-.105	-.268	-.319	-.182	.053	.069	-.125				22

Table 12 Continued

Pressure coefficients on swept wing

Configuration 3 M= 1.61 R=3.6 x 10^6

Orif	Station 1	2	3	4	24	5	6	7	8	9	10	Orif
					α= - 9	δ= 0.0						
1	.775	.721	.744	.680		.308	.700	.413				1
2	.519	.404	.447	.452		.477	.500	.328				2
3	.283	.320	.351	.357		.398	.427	.177				3
4	.271	.270	.315	.334		.362	.367	.106				4
5	.249	.248	.273	.306		.331	.343	.040				5
6	.226	.233	.253	.279		.298	.310	.013				6
7	.218	.220	.237	.244		.270	.262	-.009				7
8	.212	.195	.191	.215		.223	.255	-.016				8
9	.211	.178	.185	.197		.220	.255	-.027				9
10	.192	.188		.215		.229	.250	-.041				10
11	.196	.193		.217		.236						11
12	.206	.201		.229		.242	.260	-.073				12
13	.193	.201	.217	.224		.239	.253	-.098				13
14	.191	.191	.204	.212		.236	.243	-.171				14
15	.183	.155	.155	.165		.169	.177	-.219				15
16	.319	-.063	-.015	.011		.132	.180	-.058				16
17		-.040	-.058	-.053								17
18		.238	.277	.189		.094	.052	-.167				18
19	.031	.010	.001	-.020	-.041	.025	.021	-.199				19
20	.050	-.001	-.002	.007	.016	.017	.003	-.200				20
21	.033	.016	.006	.068	.034	.018	-.007	-.195				21
22	.035	.045	.009	.001	-.007	.007	-.015	-.177				22
					α= - 6	δ= -30.0						
1	.812	.705	.732	.719		.579	.721	.749				1
2	.224	.294	.322	.348		.333	.364	.211				2
3	.189	.191	.220	.220		.271	.278	.055				3
4	.177	.164	.193	.206		.236	.240	.018				4
5	.160	.144	.160	.181		.203	.221	-.013				5
6	.137	.132	.145	.166		.189	.197	-.028				6
7	.127	.125	.135	.139		.164	.167	-.043				7
8	.122	.103	.102	.120		.123	.140	-.056				8
9	.120	.085	.083	.094		.112	.136	-.063				9
10	.107	.093		.103		.228	.228	-.032				10
11	.109	.101		.198		.368						11
12	.115	.108		.454		.379	.315	.017				12
13	.108	.110	.297	.489		.368	.311	-.018				13
14	.110	.105	.486	.492		.336	.298	-.087				14
15	.101	.372	.509	.468		.286	.262	-.166				15
16	.201	.433	.454	.311		.271	.261	-.015				16
17		.035	.088	.217								17
18		.469	.475	.446		.235	.097	-.113				18
19	.533	.928	.788	.418	-.329	.208	.116	-.148				19
20	.599	.843	.932	.562	-.353	.181	.123	-.145				20
21	.560	.770	.836	.470	-.317	.152	.113	-.126				21
22	.479	.591	.596	.173	-.289	.072	.081	-.094				22
					α= - 6	δ= -20.0						
1	.811	.703	.730	.718		.570	.718	.739				1
2	.223	.295	.321	.348		.334	.367	.214				2
3	.187	.194	.219	.220		.272	.281	.058				3
4	.177	.166	.194	.206		.238	.243	.019				4
5	.159	.147	.160	.182		.204	.224	-.016				5
6	.136	.134	.145	.165		.188	.199	-.029				6
7	.129	.127	.135	.142		.164	.167	-.044				7
8	.121	.106	.102	.117		.126	.142	-.059				8
9	.121	.087	.083	.094		.115	.134	-.070				9
10	.108	.096		.102		.111	.126	-.087				10
11	.108	.105		.105		.114						11
12	.114	.110		.116		.120	.133	-.082				12
13	.106	.112	.115	.116		.122	.128	-.118				13
14	.108	.105	.109	.111		.130	.125	-.083				14
15	.094	.071	.085	.285		.120	.102	-.225				15
16	.194	.033	.123	.427		.150	.127	-.071				16
17		.060	.122	.242								17
18		.508	.550	.541		.120	-.029	-.164				18
19	.220	.523	.640	.379	-.172	.129	-.050	-.191				19
20	.329	.471	.560	.261	.112	.146	.000	-.188				20
21	.323	.448	.537	.221	-.259	.147	.025	-.182				21
22	.267	.389	.438	.087	-.174	.117	.034	-.168				22

Table 12 Continued

Pressure coefficients on swept wing

Configuration 3 M= 1.61 R=3.6 x 10^6

Orif	Station 1	2	3	4	24	5	6	7	8	9	10	Orif
					α= - 6		δ= -10.0					
1	.809	.702	.731	.720		.568	.719	.734				1
2	.220	.296	.325	.352		.340	.370	.218				2
3	.184	.194	.220	.224		.276	.285	.064				3
4	.176	.167	.195	.211		.242	.245	.024				4
5	.157	.146	.163	.186		.208	.226	-.014				5
6	.135	.134	.148	.170		.192	.201	-.027				6
7	.126	.128	.138	.144		.169	.171	-.042				7
8	.121	.105	.106	.121		.127	.146	-.057				8
9	.118	.089	.088	.099		.116	.136	-.068				9
10	.111	.096		.105		.113	.129	-.086				10
11	.108	.104		.109		.118						11
12	.114	.110		.120		.123	.136	-.082				12
13	.103	.114	.119	.120		.125	.131	-.118				13
14	.106	.106	.113	.116		.131	.127	-.092				14
15	.093	.070	.077	.085		.080	.092	-.224				15
16	.186	-.059	-.050	.035		.051	.099	-.073				16
17		-.018	-.022	.000								17
18		.339	.388	.302		.012	-.022	-.167				18
19	.069	.207	.237	.101	.044	-.047	-.054	-.196				19
20	.137	.172	.211	.092	.095	-.050	-.067	-.194				20
21	.150	.165	.206	.068	-.001	-.010	-.073	-.186				21
22	.064	.163	.187	.004	-.077	.026	-.077	-.174				22
					α= - 6		δ= - 5.0					
1	.809	.703	.732	.716		.567	.719	.730				1
2	.222	.295	.323	.353		.342	.372	.219				2
3	.185	.195	.222	.224		.277	.286	.065				3
4	.177	.166	.196	.209		.245	.248	.025				4
5	.157	.145	.163	.186		.209	.229	-.012				5
6	.137	.134	.148	.169		.194	.203	-.026				6
7	.128	.129	.136	.144		.170	.172	-.041				7
8	.121	.106	.104	.121		.129	.148	-.056				8
9	.120	.091	.087	.099		.120	.138	-.067				9
10	.114	.099		.105		.115	.131	-.085				10
11	.110	.106		.109		.118						11
12	.114	.112		.120		.124	.137	-.082				12
13	.106	.114	.118	.120		.127	.133	-.120				13
14	.108	.106	.113	.115		.132	.132	-.088				14
15	.096	.072	.077	.084		.081	.092	-.220				15
16	.183	-.069	-.054	.007		.052	.100	-.068				16
17		-.035	-.043	-.027								17
18		.218	.272	.172		.015	-.021	-.165				18
19	-.002	.034	.032	-.032	-.062	-.046	-.052	-.190				19
20	.037	.021	.020	-.011	-.004	-.052	-.064	-.186				20
21	.030	.009	.024	-.032	.007	-.046	-.071	-.181				21
22	-.015	.037	.029	-.058	-.118	-.037	-.077	-.168				22
					α= - 6		δ= 0.0					
1	.810	.707	.730	.719		.564	.720	.735				1
2	.220	.293	.318	.351		.338	.370	.219				2
3	.182	.191	.219	.223		.274	.285	.060				3
4	.175	.165	.194	.209		.241	.244	.023				4
5	.156	.144	.162	.186		.207	.227	-.010				5
6	.135	.133	.145	.169		.191	.203	-.024				6
7	.126	.126	.136	.144		.168	.172	-.037				7
8	.120	.106	.100	.119		.126	.146	-.052				8
9	.118	.088	.084	.096		.117	.136	-.062				9
10	.112	.095		.103		.112	.129	-.081				10
11	.109	.103		.106		.114						11
12	.112	.109		.120		.122	.135	-.079				12
13	.105	.112	.116	.121		.122	.132	-.113				13
14	.106	.105	.112	.115		.129	.130	-.080				14
15	.094	.070	.075	.084		.079	.087	-.199				15
16	.178	-.070	-.057	-.003		.045	.095	-.059				16
17		-.041	-.049	-.037								17
18		.137	.183	.093		.012	-.024	-.160				18
19	-.037	-.063	-.065	-.087	-.105	-.050	-.057	-.183				19
20	-.015	-.068	-.073	-.067	-.064	-.060	-.068	-.181				20
21	-.055	-.065	-.071	-.019	-.052	-.053	-.075	-.175				21
22	-.034	-.031	-.064	-.074	-.077	-.054	-.079	-.164				22

Table 12 Continued

Pressure coefficients on swept wing

Configuration 3 M= 1.61 R=3.6 x 10^6

Orif	Station 1	2	3	4	24	5	6	7	8	9	10	Orif
					α= - 6	δ= 5.0						
1	.810	.706	.730	.720		.561	.721	.730				1
2	.222	.295	.323	.354		.340	.375	.220				2
3	.185	.193	.221	.227		.275	.288	.066				3
4	.177	.167	.196	.212		.242	.248	.022				4
5	.158	.145	.163	.189		.210	.229	-.013				5
6	.137	.134	.149	.172		.191	.203	-.025				6
7	.129	.129	.140	.148		.169	.173	-.040				7
8	.121	.106	.106	.124		.129	.148	-.055				8
9	.118	.090	.088	.100		.117	.139	-.066				9
10	.113	.099		.108		.114	.131	-.085				10
11	.112	.105		.111		.119						11
12	.115	.112		.122		.125	.137	-.080				12
13	.107	.112	.120	.124		.128	.133	-.117				13
14	.107	.105	.115	.120		.133	.131	-.093				14
15	.096	.073	.078	.090		.081	.092	-.219				15
16	.177	-.066	-.052	.000		.051	.098	-.067				16
17		-.037	-.047	-.035								17
18		.053	.090	.012		.016	-.021	-.165				18
19	-.081	-.149	-.152	-.147	-.152	-.046	-.050	-.193				19
20	-.077	-.150	-.153	-.140	-.122	-.054	-.064	-.192				20
21	-.123	-.148	-.154	-.135	-.129	-.051	-.070	-.186				21
22	-.086	-.083	-.149	-.158	-.152	-.054	-.074	-.170				22
					α= - 6	δ= 10.0						
1	.811	.707	.732	.718		.563	.722	.730				1
2	.222	.297	.325	.355		.345	.377	.221				2
3	.186	.194	.228	.227		.279	.290	.067				3
4	.178	.166	.202	.212		.247	.250	.025				4
5	.159	.145	.163	.189		.213	.233	-.013				5
6	.137	.135	.149	.172		.197	.206	-.025				6
7	.130	.129	.139	.148		.173	.174	-.042				7
8	.124	.106	.105	.124		.131	.150	-.056				8
9	.120	.090	.088	.100		.120	.142	-.068				9
10	.118	.099		.109		.117	.133	-.086				10
11	.112	.106		.111		.120						11
12	.116	.113		.122		.127	.140	-.080				12
13	.109	.114	.121	.124		.130	.135	-.115				13
14	.111	.108	.116	.119		.135	.134	-.093				14
15	.098	.073	.078	.089		.084	.094	-.218				15
16	.177	-.043	-.042	.016		.088	.102	-.068				16
17		-.021	-.027	-.017								17
18		-.037	-.011	-.081		.017	-.020	-.163				18
19	-.113	-.232	-.233	-.200	-.173	-.044	-.050	-.189				19
20	-.133	-.228	-.231	-.225	-.163	-.052	-.063	-.187				20
21	-.167	-.226	-.234	-.214	-.189	-.050	-.070	-.181				21
22	-.171	-.088	-.220	-.260	-.182	-.055	-.074	-.166				22
					α= - 6	δ= 20.0						
1	.809	.705	.730	.718		.560	.722	.723				1
2	.222	.296	.323	.357		.345	.379	.221				2
3	.186	.192	.223	.228		.279	.291	.068				3
4	.177	.165	.197	.214		.247	.253	.024				4
5	.159	.143	.164	.191		.211	.232	-.015				5
6	.137	.132	.151	.174		.194	.206	-.027				6
7	.130	.126	.141	.149		.172	.177	-.042				7
8	.124	.105	.105	.126		.131	.153	-.056				8
9	.119	.087	.091	.103		.120	.143	-.069				9
10	.118	.097		.110		.118	.135	-.086				10
11	.111	.105		.112		.121						11
12	.114	.111		.123		.128	.142	-.081				12
13	.110	.114	.123	.126		.132	.138	-.113				13
14	.110	.107	.120	.121		.136	.135	-.094				14
15	.098	.073	.081	.093		.086	.096	-.217				15
16	.166	.031	.041	.092		.071	.110	-.065				16
17		.044	.069	.097								17
18		-.199	-.179	-.232		.018	-.020	-.161				18
19	-.223	-.353	-.348	-.289	-.201	-.043	-.049	-.188				19
20	-.277	-.352	-.349	-.355	-.196	-.050	-.062	-.184				20
21	-.292	-.347	-.350	-.359	-.250	-.047	.070	-.179				21
22	-.310	-.179	-.211	-.376	-.219	-.056	-.073	-.166				22

Table 12 Continued

Pressure coefficients on swept wing

Configuration 3 M=1.61 R=3.6 x 10^6

Orif	Station 1	2	3	4	24	5	6	7	8	9	10	Orif
					α= − 6		δ= 23.0					
1	.812	.706	.733	.719		.560	.721	.722				1
2	.223	.299	.327	.355		.347	.378	.227				2
3	.186	.196	.226	.229		.282	.293	.073				3
4	.177	.170	.200	.215		.249	.253	.030				4
5	.159	.148	.165	.191		.216	.234	−.011				5
6	.138	.137	.150	.175		.198	.208	−.024				6
7	.130	.131	.140	.150		.175	.178	−.040				7
8	.125	.109	.106	.126		.135	.154	−.055				8
9	.119	.093	.091	.102		.122	.145	−.066				9
10	.119	.103		.112		.119	.136	−.085				10
11	.112	.109		.114		.122						11
12	.114	.117		.125		.130	.143	−.080				12
13	.110	.120	.124	.127		.134	.139	−.110				13
14	.110	.112	.120	.122		.137	.136	−.091				14
15	.099	.078	.081	.094		.088	.104	−.217				15
16	.163	.052	.078	.139		.082	.116	−.061				16
17		.065	.112	.153								17
18		−.252	−.238	−.289		.020	−.016	−.161				18
19	−.304	−.400	−.401	−.336	−.205	−.040	−.046	−.190				19
20	−.258	−.402	−.406	−.386	−.204	−.046	−.060	−.186				20
21	−.326	−.399	−.407	−.431	−.271	−.041	−.067	−.180				21
22	−.362	−.231	−.242	−.400	−.233	−.055	−.069	−.165				22
					α= − 3		δ= 0.0					
1	.833	.713	.730	.724		.685	.716	.820				1
2	.153	.186	.222	.246		.231	.257	.139				2
3	.118	.102	.096	.111		.152	.153	−.040				3
4	.107	.085	.105	.120		.141	.140	.007				4
5	.090	.069	.079	.095		.110	.128	−.002				5
6	.069	.062	.064	.078		.094	.102	−.016				6
7	.062	.057	.057	.061		.080	.081	−.013				7
8	.057	.040	.033	.042		.048	.061	−.029				8
9	.054	.023	.016	.024		.035	.051	−.025				9
10	.055	.031		.026		.035	.039	−.057				10
11	.048	.038		.030		.035						11
12	.050	.047		.039		.042	.046	−.064				12
13	.042	.048	.047	.041		.040	.043	−.086				13
14	.047	.043	.047	.043		.048	.044	.037				14
15	.033	.013	.018	.019		.008	.016	−.101				15
16	.096	−.055	−.063	−.005		−.013	.025	.015				16
17		−.038	−.041	−.031								17
18		.063	.097	.010		−.050	−.089	−.148				18
19	−.076	−.112	−.114	−.128	−.144	−.106	−.117	−.140				19
20	−.062	−.114	−.117	−.117	−.119	−.114	−.127	−.146				20
21	−.100	−.110	−.114	−.090	−.126	−.110	−.132	−.152				21
22	−.070	−.070	−.112	−.117	−.123	−.106	−.129	−.151				22
					α= 0		δ= −30.0					
1	.856	.805	.729	.687		.731	.601	.855				1
2	.105	.089	.116	.136		.134	.154	.100				2
3	.054	.033	.045	.066		.072	.070	−.033				3
4	.054	.017	.022	.021		.036	.031	−.008				4
5	.036	.006	−.001	.004		.009	.022	−.008				5
6	.019	.000	−.006	−.007		.000	.004	−.015				6
7	.011	.002	−.013	−.019		−.008	−.013	−.007				7
8	.009	−.015	−.034	−.034		−.035	−.029	−.025				8
9	.005	−.030	−.043	−.050		−.048	−.034	−.019				9
10	−.005	−.025		−.043		−.049	−.043	−.040				10
11	−.005	−.019		−.042		.013						11
12	.002	−.009		.163		.142	−.036	−.067				12
13	−.013	−.004	−.022	.283		.145	−.011	−.063				13
14	−.006	−.009	.279	.301		.128	.029	.026				14
15	−.011	.136	.322	.291		.087	.036	−.052				15
16	.080	.248	.287	.150		.074	.046	.058				16
17		.092	.139	.210								17
18		.295	.301	.249		.042	−.090	−.108				18
19	.333	.713	.543	.223	−.363	.033	−.106	−.146				19
20	.404	.676	.819	.399	−.341	.031	−.083	−.160				20
21	.389	.618	.763	.461	−.336	.022	−.040	−.149				21
22	.350	.506	.546	.158	−.282	.012	.016	−.128				22

Table 12 Continued

Pressure coefficients on swept wing

Configuration 3 M=1.61 R=3.6 x 10^6

Orif	Station 1	2	3	4	24	5	6	7	8	9	10	Orif
					α= 0		δ= -20.0					
1	.857	.804	.730	.687		.731	.611	.853				1
2	.106	.089	.117	.141		.137	.159	.103				2
3	.055	.034	.046	.067		.074	.072	-.034				3
4	.055	.016	.025	.025		.040	.035	-.007				4
5	.037	.007	-.001	.007		.012	.025	-.007				5
6	.018	.002	-.005	-.007		.005	.006	-.014				6
7	.011	.002	-.011	-.017		-.006	-.011	-.007				7
8	.008	-.016	-.032	-.031		-.031	-.026	-.025				8
9	.005	-.030	-.042	-.045		-.045	-.031	-.018				9
10	-.003	-.023		-.040		-.045	-.041	-.041				10
11	-.004	-.017		-.039		-.040						11
12	.002	-.008		-.029		-.035	-.038	-.062				12
13	-.011	-.005	-.021	-.027		-.035	-.039	-.061				13
14	-.005	-.009	-.018	-.027		-.029	-.038	.037				14
15	-.017	-.038	-.038	.021		-.059	-.049	-.052				15
16	.065	.008	.021	.214		-.047	-.016	.056				16
17		.035	.079	.149								17
18		.266	.262	.227		-.110	-.147	-.108				18
19	.092	.355	.432	.213	-.231	-.156	-.175	-.143				19
20	.175	.317	.388	.160	-.025	-.105	-.182	-.163				20
21	.183	.292	.368	.130	-.294	-.049	-.180	-.169				21
22	.133	.257	.309	.016	-.251	-.008	-.166	-.157				22
					α= 0		δ= -10.0					
1	.859	.802	.726	.688		.727	.616	.854				1
2	.106	.088	.120	.143		.139	.164	.105				2
3	.055	.033	.047	.067		.075	.074	-.033				3
4	.054	.016	.025	.025		.041	.037	-.002				4
5	.038	.006	.001	.007		.014	.029	-.002				5
6	.020	.000	-.004	-.006		.007	.011	-.010				6
7	.011	-.001	-.009	-.016		-.004	-.007	-.003				7
8	.008	-.014	-.031	-.031		-.028	-.022	-.022				8
9	.003	-.030	-.040	-.048		-.042	-.026	-.015				9
10	-.001	-.025		-.040		-.041	-.037	-.039				10
11	-.005	-.020		-.039		-.036						11
12	.000	-.009		-.029		-.030	-.032	-.050				12
13	-.010	-.005	-.019	-.029		-.032	-.034	-.053				13
14	-.005	-.008	-.016	-.027		-.024	-.034	.055				14
15	-.019	-.038	-.038	-.043		-.056	-.047	-.055				15
16	.052	-.040	-.051	.010		-.058	-.022	.055				16
17		-.022	-.024	-.009								17
18		.149	.132	.056		-.106	-.143	-.109				18
19	-.029	.072	.078	-.035	-.083	-.157	-.169	-.145				19
20	.019	.054	.073	-.039	-.046	-.165	-.176	-.165				20
21	.019	.041	.072	-.048	-.099	-.158	-.176	-.171				21
22	-.040	.046	.058	-.091	-.211	-.128	-.163	-.158				22
					α= 0		δ= - 5.0					
1	.858	.802	.728	.689		.731	.618	.854				1
2	.106	.090	.121	.149		.142	.165	.105				2
3	.057	.034	.046	.071		.078	.076	-.035				3
4	.055	.018	.026	.031		.044	.039	-.004				4
5	.038	.008	.005	.011		.018	.030	-.004				5
6	.022	.002	-.002	.000		.009	.011	-.012				6
7	.014	.003	-.007	-.011		.000	-.007	-.005				7
8	.008	-.015	-.028	-.025		-.026	-.020	-.023				8
9	.006	-.029	-.037	-.039		-.041	-.024	-.018				9
10	.000	-.023		-.035		-.040	-.035	-.040				10
11	-.001	-.018		-.034		-.035						11
12	.002	-.007		-.024		-.030	-.031	-.050				12
13	-.007	-.003	-.015	-.022		-.030	-.034	-.052				13
14	-.003	-.007	-.012	-.022		-.024	-.033	.051				14
15	-.018	-.036	-.036	-.037		-.054	-.048	-.052				15
16	.050	-.046	-.058	-.006		-.060	-.026	.055				16
17		-.034	-.035	-.026								17
18		.064	.078	-.026		-.106	-.142	-.109				18
19	-.082	-.073	-.076	-.133	-.146	-.157	-.170	-.139				19
20	-.063	-.078	-.080	-.127	-.118	-.164	-.177	-.165				20
21	-.085	-.087	-.077	-.136	-.118	-.160	-.176	-.166				21
22	-.096	-.056	-.072	-.135	-.177	-.149	-.163	-.154				22

Table 12 Continued

Pressure coefficients on swept wing

Configuration 3 M=1.61 R=3.6 x 10^6

Orif	Station 1	2	3	4	24	5	6	7	8	9	10	Orif
					α= 0		δ= 0.0					
1	.858	.803	.727	.688		.727	.619	.854				1
2	.104	.088	.119	.142		.138	.163	.103				2
3	.054	.033	.045	.067		.075	.073	-.035				3
4	.054	.017	.024	.026		.042	.037	-.007				4
5	.036	.006	.002	.008		.012	.029	-.004				5
6	.019	.001	-.003	-.006		.006	.009	-.015				6
7	.012	.002	-.011	-.017		-.004	-.008	-.007				7
8	.007	-.014	-.030	-.029		-.030	-.023	-.026				8
9	.004	-.030	-.039	-.047		-.043	-.028	-.019				9
10	-.001	-.022		-.038		-.042	-.037	-.042				10
11	-.003	-.017		-.038		-.037						11
12	.002	-.007		-.029		-.032	-.034	-.051				12
13	-.009	-.004	-.018	-.027		-.031	-.035	-.054				13
14	-.004	-.007	-.014	-.024		-.027	-.034	.054				14
15	-.018	-.037	-.038	-.043		-.057	-.050	-.053				15
16	.052	-.048	-.063	-.015		-.064	-.028	.052				16
17		-.036	-.041	-.035								17
18		.016	.032	-.060		-.108	-.146	-.110				18
19	-.097	-.143	-.148	-.164	-.170	-.159	-.172	-.144				19
20	-.084	-.145	-.152	-.159	-.152	-.168	-.179	-.168				20
21	-.129	-.142	-.150	-.153	-.173	-.163	-.177	-.174				21
22	-.088	-.091	-.145	-.135	-.155	-.158	-.166	-.163				22
					α= 0		δ= 5.0					
1	.858	.804	.728	.688		.726	.620	.854				1
2	.105	.088	.118	.141		.139	.163	.104				2
3	.053	.034	.046	.067		.077	.073	-.034				3
4	.053	.017	.025	.025		.041	.038	-.005				4
5	.037	.007	.002	.007		.013	.030	-.003				5
6	.021	.002	-.003	-.006		.006	.010	-.012				6
7	.013	.002	-.010	-.016		-.004	-.006	-.005				7
8	.007	-.012	-.030	-.030		-.026	-.022	-.023				8
9	.004	-.029	-.040	-.044		-.041	-.025	-.017				9
10	.000	-.021		-.039		-.041	-.036	-.042				10
11	-.004	-.016		-.038		-.035						11
12	.002	-.006		-.029		-.029	-.032	-.050				12
13	-.008	-.003	-.019	-.026		-.030	-.035	-.051				13
14	-.004	-.006	-.016	-.024		-.024	-.034	.056				14
15	-.017	-.035	-.038	-.039		-.055	-.050	-.051				15
16	.050	-.040	-.056	-.017		-.060	-.026	.056				16
17		-.027	-.033	-.030								17
18		-.054	-.034	-.116		-.106	-.144	-.106				18
19	-.119	-.221	-.224	-.207	-.209	-.158	-.170	-.140				19
20	-.157	-.223	-.226	-.225	-.182	-.166	-.178	-.164				20
21	-.210	-.216	-.225	-.269	-.198	-.160	-.176	-.167				21
22	-.156	-.081	-.202	-.186	-.196	-.155	-.164	-.154				22
					α= 0		δ= 10.0					
1	.858	.806	.729	.688		.731	.623	.851				1
2	.106	.091	.120	.144		.140	.166	.105				2
3	.057	.035	.047	.069		.077	.076	-.033				3
4	.054	.019	.026	.027		.042	.040	-.003				4
5	.036	.009	.002	.008		.015	.031	-.002				5
6	.021	.004	-.006	-.004		.007	.011	-.012				6
7	.014	.004	-.010	-.013		-.001	-.007	-.006				7
8	.009	-.012	-.030	-.028		-.027	-.020	-.023				8
9	.006	-.027	-.039	-.042		-.040	-.024	-.020				9
10	-.001	-.021		-.037		-.040	-.035	-.042				10
11	-.003	-.014		-.035		-.034						11
12	.004	-.005		-.025		-.028	-.031	-.053				12
13	-.007	-.002	-.017	-.024		-.029	-.032	-.051				13
14	-.002	-.006	-.015	-.022		-.024	-.031	.051				14
15	-.015	-.035	-.037	-.038		-.055	-.047	-.050				15
16	.047	-.021	-.038	-.014		-.055	-.019	.059				16
17		-.007	-.009	-.006								17
18		-.122	-.106	-.174		-.105	-.143	-.105				18
19	-.144	-.283	-.287	-.248	-.234	-.158	-.169	-.142				19
20	-.221	-.285	-.287	-.308	-.210	-.164	-.176	-.167				20
21	-.242	-.277	-.284	-.309	-.234	-.159	-.175	-.166				21
22	-.247	-.104	-.175	-.293	-.218	-.153	-.164	-.154				22

Table 12 Continued

Pressure coefficients on swept wing

Configuration 3 M= 1.61 R= 3.6 x 10^6

Orif	Station 1	2	3	4	24	5	6	7	8	9	10	Orif
					α= 0		δ= 20.0					
1	.859	.802	.727	.689		.730	.629	.856				1
2	.106	.088	.119	.146		.142	.170	.106				2
3	.055	.034	.045	.070		.078	.078	-.033				3
4	.054	.017	.024	.029		.044	.045	-.004				4
5	.037	.007	.006	.011		.018	.035	-.001				5
6	.021	.001	.000	.000		.010	.017	-.011				6
7	.013	.001	-.007	-.012		.001	-.002	-.004				7
8	.007	-.015	-.028	-.025		-.023	-.017	-.024				8
9	.004	-.028	-.036	-.039		-.036	-.021	-.016				9
10	.000	.023		-.035		-.035	-.031	-.037				10
11	-.003	-.017		-.033		-.032						11
12	.000	-.007		-.025		-.025	-.026	-.056				12
13	-.002	-.002	-.014	-.022		-.026	-.028	-.053				13
14	-.001	-.007	-.011	-.022		-.021	-.027	.032				14
15	-.011	-.034	-.031	-.019		-.050	-.037	-.049				15
16	.022	.021	.064	.137		-.038	-.005	.055				16
17		.043	.106	.174								17
18		-.245	-.236	-.282		-.099	-.138	-.107				18
19	-.280	-.376	-.374	-.327	-.262	-.152	-.166	-.134				19
20	-.328	-.380	-.376	-.396	-.252	-.160	-.172	-.159				20
21	-.310	-.374	-.371	-.385	-.289	-.149	-.174	-.165				21
22	-.352	-.223	-.230	-.395	-.243	-.129	-.161	-.155				22
					α= 0		δ= 30.0					
1	.857	.801	.727	.694		.726	.637	.851				1
2	.107	.090	.122	.156		.147	.177	.106				2
3	.056	.034	.048	.074		.081	.082	-.035				3
4	.056	.017	.026	.034		.048	.050	.000				4
5	.040	.007	.007	.013		.020	.038	.001				5
6	.021	.001	.001	.003		.012	.020	-.008				6
7	.014	.003	-.005	-.007		.005	.002	-.003				7
8	.010	-.011	-.024	-.022		-.021	-.011	-.022				8
9	.004	-.029	-.035	-.036		-.034	-.017	-.014				9
10	.003	-.021		-.030		-.034	-.029	-.037				10
11	-.003	-.015		-.030		-.030						11
12	.000	-.007		-.020		-.022	-.023	-.056				12
13	.002	-.003	-.011	-.018		-.023	-.024	-.055				13
14	.002	-.006	-.007	-.017		-.015	-.024	.023				14
15	-.007	-.030	-.003	.069		-.047	-.028	-.050				15
16	.013	.082	.143	.199		-.028	.005	.057				16
17		.082	.161	.223								17
18		-.356	-.347	-.358		-.096	-.135	-.106				18
19	-.350	-.453	-.402	-.375	-.272	-.148	-.168	-.124				19
20	-.316	-.453	-.350	-.364	-.262	-.151	-.171	-.148				20
21	-.365	-.412	-.341	-.419	-.294	-.136	-.170	-.163				21
22	-.411	-.298	-.330	-.380	-.250	-.117	-.107	-.147				22
					α= 3		δ= 0.0					
1	.890	.821	.737	.639		.746	.467	.844				1
2	.060	-.020	-.021	-.033		-.032	-.027	-.005				2
3	-.009	-.025	-.033	-.025		-.028	-.019	-.007				3
4	.005	-.041	-.049	-.057		-.043	-.041	-.052				4
5	-.007	-.053	-.063	-.063		-.054	-.053	-.045				5
6	-.026	-.052	-.073	-.075		-.066	-.071	-.055				6
7	-.031	-.050	-.076	-.081		-.082	.079	-.050				7
8	-.040	-.063	-.086	-.093		-.098	-.080	-.068				8
9	-.042	-.074	-.093	-.106		-.106	-.087	-.065				9
10	-.045	-.069		-.097		-.102	-.094	-.087				10
11	-.051	-.064		-.095		-.096						11
12	-.049	-.053		-.087		-.093	-.092	-.129				12
13	-.051	-.049	-.066	-.086		-.093	-.099	-.117				13
14	-.047	-.050	-.065	-.079		-.091	-.102	-.014				14
15	-.056	-.078	-.084	-.091		-.116	-.103	-.129				15
16	-.049	-.051	-.069	-.056		-.107	-.074	-.004				16
17		-.035	-.044	-.040								17
18		-.040	-.035	-.098		-.154	-.186	-.164				18
19	-.105	-.168	-.172	-.172	-.180	-.197	-.203	-.182				19
20	-.102	-.169	-.172	-.190	-.181	-.192	-.203	-.205				20
21	-.162	-.155	-.171	-.182	-.205	-.190	-.200	-.216				21
22	-.112	-.069	-.154	-.150	-.172	-.176	-.182	-.231				22

Table 12 Continued

Pressure coefficients on swept wing

Configuration 3 M=1.61 R=3.6 x 10^6

Orif	Station 1	2	3	4	24	5	6	7	8	9	10	Orif
					α= 6		δ= -30.0					
1	.887	.571	.620	.501		.756	.265	.920				1
2	-.006	-.153	-.174	-.183		-.194	-.199	-.150				2
3	-.092	-.149	-.164	-.166		-.183	-.181	-.152				3
4	-.060	-.129	-.180	-.187		-.191	-.196	-.193				4
5	-.071	-.134	-.187	-.190		-.192	-.196	-.188				5
6	-.089	-.129	-.190	-.197		-.190	-.201	-.182				6
7	-.093	-.121	-.168	-.203		-.202	-.208	-.206				7
8	-.101	-.131	-.172	-.211		-.215	-.216	-.256				8
9	-.106	-.142	-.177	-.225		-.223	-.219	-.307				9
10	-.106	-.134		-.216		-.224	-.227	-.344				10
11	-.112	-.132		-.211		-.220						11
12	-.111	-.122		-.177		-.135	-.218	-.333				12
13	-.114	-.118	-.144	.032		-.103	-.218	-.335				13
14	-.108	-.118	.063	.084		-.106	-.217	-.256				14
15	-.116	.030	.134	.097		-.137	-.220	-.322				15
16	-.093	.110	.125	-.020		-.146	-.191	-.167				16
17		.102	.151	.206								17
18		.127	.138	.025		-.177	-.282	-.369				18
19	.143	.420	.295	.020	-.377	-.200	-.299	-.365				19
20	.216	.476	.517	.127	-.342	-.205	-.271	-.357				20
21	.215	.432	.557	.228	-.346	-.187	-.187	-.352				21
22	.192	.359	.432	.095	-.302	-.099	-.113	-.363				22
					α= 6		δ= -20.0					
1	.890	.573	.624	.506		.759	.273	.918				1
2	-.005	-.153	-.171	-.179		-.190	-.192	-.146				2
3	-.092	-.148	-.162	-.162		-.178	-.175	-.147				3
4	-.063	-.128	-.178	-.182		-.186	-.191	-.189				4
5	-.072	-.133	-.182	-.185		-.188	-.191	-.184				5
6	-.089	-.127	-.184	-.193		-.186	-.195	-.175				6
7	-.093	-.120	-.163	-.197		-.198	-.204	-.198				7
8	-.102	-.131	-.165	-.206		-.210	-.212	-.247				8
9	-.106	-.142	-.173	-.221		-.218	-.214	-.299				9
10	-.106	-.133		-.210		-.220	-.221	-.334				10
11	-.111	-.131		-.206		-.215						11
12	-.109	-.120		-.184		-.210	-.214	-.326				12
13	-.112	-.117	-.138	-.173		-.214	-.214	-.335				13
14	-.108	-.117	-.135	-.165		-.206	-.214	-.256				14
15	-.116	-.121	-.101	.003		-.225	-.218	-.320				15
16	-.106	.016	.026	.045		-.214	-.188	-.169				16
17		.018	.041	.076								17
18		.066	.067	-.007		-.260	-.283	-.370				18
19	-.007	.173	.190	-.026	-.301	-.298	-.302	-.364				19
20	.038	.169	.211	-.007	-.197	-.287	-.301	-.359				20
21	.054	.151	.212	-.001	-.302	-.257	-.291	-.351				21
22	.023	.126	.165	-.078	-.251	-.122	-.242	-.365				22
					α= 6		δ= -10.0					
1	.890	.572	.625	.505		.756	.276	.908				1
2	-.005	-.151	-.169	-.180		-.190	-.192	-.142				2
3	-.092	-.146	-.162	-.164		-.178	-.174	-.143				3
4	-.060	-.126	-.177	-.184		-.186	-.191	-.189				4
5	-.070	-.132	-.184	-.188		-.188	-.190	-.185				5
6	-.088	-.126	-.184	-.194		-.188	-.195	-.174				6
7	-.093	-.119	-.165	-.200		-.198	-.204	-.194				7
8	-.100	-.129	-.167	-.208		-.209	-.212	-.241				8
9	-.105	-.140	-.174	-.221		-.217	-.214	-.293				9
10	-.105	-.132		-.214		-.216	-.221	-.330				10
11	-.110	-.130		-.208		-.213						11
12	-.108	-.120		-.185		-.210	-.213	-.321				12
13	-.111	-.116	-.141	-.174		-.211	-.212	-.331				13
14	-.106	-.115	-.137	-.167		-.204	-.213	-.255				14
15	-.115	-.135	-.150	-.167		-.223	-.219	-.317				15
16	-.120	-.059	-.074	-.062		-.217	-.187	-.165				16
17		-.043	-.047	-.039								17
18		-.031	-.038	-.138		-.257	-.284	-.365				18
19	-.109	-.081	-.091	-.188	-.205	-.299	-.301	-.362				19
20	-.098	-.087	-.094	-.191	-.215	-.297	-.301	-.356				20
21	-.112	-.098	-.088	-.186	-.286	-.286	-.292	-.348				21
22	-.109	-.061	-.078	-.163	-.226	-.185	-.247	-.362				22

Table12 Continued

Pressure coefficients on swept wing

Configuration 3 M=1.61 R=3.6 x 10^6

Orif	Station 1	2	3	4	24	5	6	7	8	9	10	Orif
					α= 6		δ= - 5.0					
1	.888	.573	.627	.509		.758	.274	.907				1
2	-.004	-.150	-.167	-.178		-.187	-.191	-.140				2
3	-.092	-.146	-.158	-.163		-.177	-.173	-.136				3
4	-.061	-.126	-.175	-.180		-.184	-.190	-.186				4
5	-.072	-.132	-.184	-.185		-.185	-.189	-.184				5
6	-.089	-.124	-.185	-.191		-.185	-.193	-.171				6
7	-.093	-.118	-.164	-.197		-.197	-.204	-.190				7
8	-.100	-.127	-.167	-.206		-.211	-.211	-.234				8
9	-.106	-.138	-.175	-.219		-.217	-.213	-.283				9
10	-.105	-.132		-.210		-.217	-.220	-.321				10
11	-.111	-.128		-.205		-.213						11
12	-.109	-.117		-.182		-.209	-.212	-.316				12
13	-.110	-.113	-.139	-.172		-.212	-.211	-.324				13
14	-.106	-.113	-.135	-.165		-.205	-.213	-.249				14
15	-.114	-.135	-.149	-.164		-.223	-.218	-.311				15
16	-.120	-.070	-.085	-.070		-.217	-.187	-.161				16
17		-.047	-.051	-.041								17
18		-.094	-.089	-.202		-.256	-.284	-.360				18
19	-.156	-.197	-.206	-.248	-.233	-.297	-.300	-.358				19
20	-.160	-.200	-.208	-.273	-.255	-.294	-.301	-.351				20
21	-.183	-.205	-.195	-.262	-.336	-.284	-.291	-.348				21
22	-.145	-.092	-.150	-.177	-.224	-.191	-.238	-.362				22
					α= 6		δ= 0.0					
1	.893	.567	.617	.504		.761	.276	.916				1
2	-.005	-.149	-.161	-.175		-.181	-.181	-.135				2
3	-.092	-.147	-.158	-.161		-.170	-.165	-.135				3
4	-.059	-.127	-.175	-.178		-.178	-.179	-.173				4
5	-.070	-.131	-.181	-.182		-.181	-.180	-.174				5
6	-.087	-.124	-.180	-.191		-.181	-.188	-.165				6
7	-.092	-.119	-.164	-.194		-.194	-.195	-.184				7
8	-.103	-.126	-.163	-.202		-.204	-.199	-.226				8
9	-.104	-.141	-.170	-.214		-.210	-.203	-.265				9
10	-.102	-.131		-.206		-.208	-.208	-.294				10
11	-.107	-.128		-.202		-.204						11
12	-.106	-.117		-.184		-.200	-.202	-.299				12
13	-.107	-.113	-.135	-.170		-.202	-.205	-.300				13
14	-.104	-.114	-.135	-.163		-.198	-.205	-.226				14
15	-.111	-.136	-.147	-.166		-.217	-.206	-.280				15
16	-.131	-.078	-.088	-.075		-.207	-.178	-.148				16
17		-.053	-.056	-.050								17
18		-.111	-.106	-.192		-.250	-.274	-.317				18
19	-.135	-.224	-.228	-.234	-.238	-.288	-.287	-.324				19
20	-.179	-.226	-.228	-.273	-.264	-.284	-.285	-.325				20
21	-.217	-.216	-.228	-.286	-.348	-.276	-.278	-.315				21
22	-.157	-.071	-.148	-.173	-.212	-.202	-.242	-.331				22
					α= 6		δ= 5.0					
1	.889	.565	.618	.503		.757	.276	.914				1
2	-.006	-.154	-.170	-.181		-.192	-.190	-.141				2
3	-.092	-.149	-.163	-.164		-.179	-.173	-.143				3
4	-.061	-.129	-.178	-.185		-.188	-.190	-.184				4
5	-.072	-.132	-.187	-.188		-.189	-.188	-.182				5
6	-.088	-.127	-.188	-.193		-.187	-.194	-.173				6
7	-.093	-.119	-.170	-.200		-.199	-.203	-.195				7
8	-.105	-.128	-.168	-.209		-.209	-.211	-.245				8
9	-.105	-.140	-.176	-.222		-.218	-.213	-.253				9
10	-.104	-.132		-.213		-.218	-.220	-.304				10
11	-.110	-.130		-.208		-.213						11
12	-.108	-.120		-.187		-.208	-.212	-.320				12
13	-.110	-.116	-.138	-.174		-.211	-.211	-.328				13
14	-.106	-.115	-.136	-.168		-.205	.213	.250				14
15	.115	.135	.149	.169		-.222	-.218	-.315				15
16	-.134	-.074	-.084	-.067		-.218	-.186	-.161				16
17		-.046	-.049	-.034								17
18		-.166	-.162	-.239		-.258	-.283	-.359				18
19	-.194	-.290	-.294	-.280	-.276	-.298	-.300	-.355				19
20	-.250	-.291	-.295	-.338	-.288	-.296	-.297	-.348				20
21	-.297	-.278	-.293	-.364	-.357	-.287	-.290	-.341				21
22	-.223	-.106	-.146	-.166	-.242	-.188	-.248	-.356				22

Table 12 Continued

Pressure coefficients on swept wing

Configuration 3 M= 1.61 R= 3.6 x 10^6

Orif	Station 1	2	3	4	24	5	6	7	8	9	10	Orif
					α= 6		δ= 10.0					
1	.892	.569	.625	.503		.758	.275	.908				1
2	-.005	-.152	-.167	-.181		-.190	-.192	-.140				2
3	-.093	-.148	-.159	-.163		-.177	-.175	-.142				3
4	-.062	-.126	-.175	-.182		-.185	-.191	-.186				4
5	-.071	-.128	-.185	-.187		-.188	-.190	-.185				5
6	-.088	-.123	-.185	-.195		-.186	-.194	-.173				6
7	-.093	-.116	-.168	-.199		-.197	-.203	-.193				7
8	-.104	-.124	-.168	-.208		-.212	-.211	-.241				8
9	-.105	-.136	-.176	-.221		-.220	-.214	-.293				9
10	-.103	-.127		-.212		-.219	-.221	-.332				10
11	-.108	-.127		-.208		-.217						11
12	-.106	-.117		-.186		-.212	-.213	-.323				12
13	-.107	-.112	-.139	-.173		-.215	-.212	-.331				13
14	-.104	-.112	-.136	-.166		-.206	-.213	-.252				14
15	-.113	-.131	-.149	-.163		-.225	-.219	-.313				15
16	-.126	-.056	-.062	-.036		-.220	-.186	-.163				16
17		-.013	-.018	.015								17
18		-.225	-.220	-.296		-.260	-.283	-.360				18
19	-.287	-.351	-.360	-.331	-.306	-.300	-.302	-.357				19
20	-.318	-.354	-.362	-.416	-.304	-.300	-.301	-.352				20
21	-.332	-.348	-.361	-.378	-.307	-.290	-.292	-.343				21
22	-.329	-.168	-.196	-.215	-.236	-.157	-.245	-.360				22
					α= 6		δ= 20.0					
1	.890	.568	.623	.507		.761	.280	.899				1
2	-.007	-.155	-.169	-.178		-.187	-.186	-.134				2
3	-.096	-.150	-.161	-.163		-.175	-.170	-.135				3
4	-.063	-.129	-.177	-.181		-.182	-.186	-.182				4
5	-.074	-.133	-.186	-.186		-.183	-.185	-.182				5
6	-.089	-.126	-.186	-.193		-.184	-.191	-.167				6
7	-.094	-.120	-.167	-.198		-.194	-.199	-.184				7
8	-.106	-.128	-.167	-.206		-.209	-.209	-.231				8
9	-.107	-.140	-.173	-.220		-.216	-.210	-.280				9
10	-.104	-.132		-.211		-.216	-.218	-.320				10
11	-.111	-.129		-.206		-.212						11
12	-.109	-.119		-.184		-.209	-.209	-.316				12
13	-.111	-.115	-.138	-.171		-.211	-.209	-.324				13
14	-.107	-.115	-.135	-.163		-.204	-.210	-.252				14
15	-.115	-.133	-.119	-.070		-.220	-.211	-.307				15
16	-.111	-.019	.016	.033		-.206	-.180	-.154				16
17		.066	.177	.305								17
18		-.324	-.318	-.376		-.254	-.276	-.359				18
19	-.372	-.430	-.427	-.412	-.321	-.297	-.298	-.352				19
20	-.400	-.434	-.347	-.427	-.292	-.296	-.302	-.348				20
21	-.336	-.403	-.305	-.356	-.341	-.283	-.291	-.346				21
22	-.396	-.272	-.287	-.285	-.249	-.116	-.147	-.359				22
					α= 6		δ= 30.0					
1	.891	.572	.631	.515		.759	.290	.886				1
2	-.001	-.149	-.165	-.175		-.179	-.179	-.125				2
3	-.091	-.145	-.158	-.158		-.167	-.163	-.125				3
4	-.059	-.125	-.173	-.177		-.176	-.180	-.175				4
5	-.070	-.129	-.182	-.181		-.178	-.180	-.171				5
6	-.086	-.123	-.181	-.189		-.179	-.184	-.161				6
7	-.092	-.116	-.162	-.193		-.190	-.197	-.170				7
8	-.102	-.126	-.165	-.203		-.205	-.204	-.207				8
9	-.104	-.137	-.171	-.217		-.213	-.206	-.256				9
10	-.100	-.128		-.207		-.212	-.213	-.299				10
11	-.109	-.127		-.201		-.207						11
12	-.106	-.116		-.178		-.206	-.204	-.300				12
13	-.107	-.112	-.135	-.167		-.206	-.205	-.317				13
14	-.104	-.111	-.133	-.161		-.198	-.207	-.241				14
15	-.110	-.126	-.087	-.037		-.215	-.203	-.333				15
16	-.102	.008	.036	.042		-.199	-.172	-.182				16
17		-.027	.095	.207								17
18		-.390	-.373	-.371		-.249	-.271	-.361				18
19	-.384	-.461	-.357	-.347	-.296	-.291	-.295	-.370				19
20	-.358	-.442	-.341	-.337	-.291	-.290	-.301	-.363				20
21	-.381	-.395	-.339	-.372	-.320	-.275	-.291	-.355				21
22	-.414	-.329	-.334	-.356	-.268	-.112	-.142	-.368				22

Table 12 Continued

Pressure coefficients on swept wing

Configuration 3 M=1.61 R=3.6 x 10^6

Orif	Station 1	2	3	4	24	5	6	7	8	9	10	Orif
					α= 9		δ= 0.0					
1	.926	.436	.478	.376		.738	.177	.994				1
2	-.036	-.194	-.207	-.229		-.233	-.242	-.213				2
3	-.124	-.192	-.206	-.214		-.221	-.224	-.218				3
4	-.087	-.180	-.218	-.227		-.226	-.233	-.231				4
5	-.097	-.159	-.230	-.228		-.226	-.230	-.265				5
6	-.113	-.157	-.229	-.233		-.227	-.236	-.282				6
7	-.116	-.147	-.221	-.235		-.236	-.243	-.293				7
8	-.129	-.157	-.223	-.239		-.247	-.245	-.321				8
9	-.131	-.165	-.212	-.252		-.252	-.245	-.349				9
10	-.132	-.156		-.244		-.250	-.249	-.359				10
11	-.136	-.153		-.243		-.246						11
12	-.135	-.145		-.234		-.237	-.243	-.356				12
13	-.137	-.140	-.167	-.226		-.234	-.245	-.366				13
14	-.130	-.138	-.162	-.209		-.233	-.247	-.298				14
15	-.137	-.154	-.171	-.188		-.249	-.246	-.354				15
16	-.137	-.081	-.092	-.097		-.241	-.217	-.200				16
17		-.050	-.059	-.051								17
18		-.116	-.128	-.198		-.280	-.303	-.388				18
19	-.142	-.202	-.206	-.216	-.274	-.310	-.318	-.383				19
20	-.170	-.203	-.198	-.244	-.286	-.308	-.309	-.376				20
21	-.206	-.183	-.199	-.255	-.367	-.302	-.291	-.363				21
22	-.158	-.061	-.102	-.148	-.216	-.196	-.246	-.373				22
					α= 12		δ=-30.0					
1	.965	.292	.213	.168		.656	-.004	.863				1
2	-.093	-.299	-.322	-.344		-.360	-.388	-.451				2
3	-.176	-.293	-.312	-.322		-.341	-.358	-.460				3
4	-.137	-.297	-.316	-.324		-.337	-.352	-.496				4
5	-.149	-.267	-.319	-.326		-.333	-.347	-.513				5
6	-.163	-.226	-.318	-.326		-.331	-.343	-.511				6
7	-.169	-.210	-.319	-.329		-.332	-.346	-.506				7
8	-.175	-.214	-.328	-.333		-.339	-.348	-.504				8
9	-.179	-.220	-.333	-.340		-.345	-.347	-.496				9
10	-.181	-.211		-.333		-.345	-.347	-.472				10
11	-.185	-.209		-.333		-.336						11
12	-.185	-.202		-.213		-.264	-.342	-.471				12
13	-.189	-.198	-.230	-.116		-.262	-.339	-.498				13
14	-.182	-.195	-.060	-.108		-.257	-.339	-.473				14
15	-.187	.004	-.020	-.119		-.262	-.338	-.493				15
16	-.153	.037	-.030	-.155		-.268	-.313	-.260				16
17		.037	.019	.007								17
18		.043	.002	-.141		-.289	-.378	-.502				18
19	.049	.211	.090	-.161	-.394	-.307	-.377	-.498				19
20	.100	.295	.308	-.106	-.389	-.319	-.307	-.495				20
21	.113	.293	.376	-.054	-.389	-.294	-.236	-.475				21
22	.088	.242	.310	-.105	-.334	-.206	-.205	-.429				22
					α= 12		δ=-20.0					
1	.964	.291	.215	.170		.657	.000	.861				1
2	-.094	-.300	-.320	-.343		-.358	-.386	-.449				2
3	-.178	-.292	-.309	-.323		-.338	-.355	-.455				3
4	-.137	-.296	-.313	-.324		-.335	-.350	-.494				4
5	-.150	-.266	-.319	-.325		-.331	-.346	-.510				5
6	-.165	-.225	-.319	-.326		-.330	-.341	-.508				6
7	-.169	-.209	-.319	-.328		-.330	-.345	-.504				7
8	-.177	-.213	-.328	-.331		-.341	-.347	-.501				8
9	-.181	-.220	-.331	-.339		-.345	-.344	-.493				9
10	-.181	-.208		-.332		-.343	-.346	-.471				10
11	-.186	-.206		-.333		-.341						11
12	-.184	-.200		-.330		-.334	-.338	-.470				12
13	-.188	-.195	-.238	-.326		-.333	-.338	-.496				13
14	-.182	-.193	-.221	-.174		-.325	-.336	-.471				14
15	-.188	-.123	-.075	-.147		-.338	-.335	-.487				15
16	-.162	-.024	-.050	-.155		-.331	-.312	-.260				16
17		-.021	-.043	-.037								17
18		-.011	-.049	-.184		-.359	-.377	-.500				18
19	-.059	.055	.008	-.185	-.332	-.393	-.388	-.500				19
20	-.040	.068	.067	-.158	-.330	-.387	-.383	-.495				20
21	-.021	.065	.087	-.138	-.361	-.335	-.378	-.478				21
22	-.029	.040	.069	-.180	-.333	-.226	-.230	-.434				22

Table 12 Continued

Pressure coefficients on swept wing

Configuration 3 M= 1.61 R= 3.6 x 10^6

Orif	Station 1	2	3	4	24	5	6	7	8	9	10	Orif
					α= 12		δ= -10.0					
1	.962	.291	.214	.171		.656	.003	.862				1
2	-.095	-.298	-.321	-.343		-.358	-.384	-.448				2
3	-.178	-.292	-.310	-.323		-.339	-.355	-.449				3
4	-.139	-.295	-.313	-.322		-.334	-.348	-.490				4
5	-.151	-.267	-.319	-.325		-.332	-.344	-.508				5
6	-.164	-.224	-.319	-.326		-.330	-.340	-.506				6
7	-.169	-.208	-.319	-.329		-.331	-.344	-.501				7
8	-.176	-.212	-.328	-.332		-.339	-.345	-.497				8
9	-.180	-.220	-.332	-.339		-.344	-.344	-.491				9
10	-.182	-.209		-.332		-.343	-.345	-.471				10
11	-.184	-.207		-.332		-.340						11
12	-.184	-.199		-.328		-.333	-.339	-.473				12
13	-.188	-.194	-.238	-.326		-.332	-.337	-.499				13
14	-.181	-.192	-.229	-.324		-.325	-.336	-.471				14
15	-.188	-.205	-.200	-.282		-.337	-.335	-.484				15
16	-.170	-.090	-.118	-.184		-.332	-.310	-.256				16
17		-.059	-.085	-.073								17
18		-.116	-.143	-.308		-.359	-.376	-.497				18
19	-.158	-.167	-.190	-.282	-.292	-.392	-.389	-.496				19
20	-.152	-.167	-.185	-.302	-.345	-.396	-.385	-.492				20
21	-.174	-.173	-.179	-.270	-.400	-.396	-.378	-.475				21
22	-.119	-.064	-.112	-.166	-.290	-.241	-.248	-.430				22
					α= 12		δ= - 5.0					
1	.963	.295	.220	.174		.659	.007	-.239				1
2	-.092	-.297	-.318	-.340		-.356	-.380	-.430				2
3	-.177	-.291	-.306	-.320		-.336	-.352	-.450				3
4	-.137	-.293	-.310	-.322		-.333	-.347	-.447				4
5	-.149	-.263	-.318	-.321		-.330	-.342	-.491				5
6	-.163	-.222	-.317	-.323		-.327	-.336	-.504				6
7	-.168	-.206	-.318	-.325		-.328	-.341	-.500				7
8	-.176	-.210	-.325	-.329		-.338	-.345	-.500				8
9	-.179	-.217	-.328	-.337		-.341	-.344	-.492				9
10	-.181	-.207		-.329		-.341	-.345	-.474				10
11	-.185	-.205		-.329		-.337						11
12	-.183	-.196		-.325		-.332	-.335	-.472				12
13	-.187	-.193	-.235	-.323		-.330	-.337	-.499				13
14	-.181	-.191	-.228	-.323		-.322	-.334	-.471				14
15	-.188	-.205	-.207	-.286		-.336	-.332	-.483				15
16	-.168	-.102	-.123	-.187		-.326	-.305	-.256				16
17		-.048	-.065	-.052								17
18		-.184	-.199	-.348		-.357	.040	-.493				18
19	-.224	-.283	-.288	-.321	-.322	-.390	-.375	-.495				19
20	-.248	-.279	-.272	-.348	-.366	-.394	-.383	-.491				20
21	-.257	-.273	-.266	-.330	-.396	-.393	-.382	-.474				21
22	-.207	-.092	-.133	-.175	-.254	-.237	-.375	-.427				22
					α= 12		δ= 0.0					
1	.970	.289	.211	.167		.647	.007	.855				1
2	-.088	-.276	-.289	-.316		-.319	-.340	-.355				2
3	-.171	-.274	-.287	-.301		-.305	-.320	-.355				3
4	-.134	-.272	-.296	-.301		-.304	-.313	-.358				4
5	-.144	-.255	-.302	-.299		-.303	-.311	-.391				5
6	-.158	-.217	-.300	-.305		-.304	-.315	-.404				6
7	-.161	-.201	-.299	-.305		-.307	-.318	-.406				7
8	-.172	-.206	-.303	-.305		-.317	-.313	-.412				8
9	-.176	-.212	-.302	-.315		-.320	-.314	-.419				9
10	-.177	-.202		-.306		-.316	-.315	-.416				10
11	-.181	-.199		-.307		-.313						11
12	-.179	-.190		-.305		-.309	-.310	-.418				12
13	-.180	-.187	-.226	-.305		-.305	-.313	-.448				13
14	-.175	-.184	-.220	-.295		-.305	-.314	-.402				14
15	-.181	-.200	-.206	-.280		-.318	-.308	-.430				15
16	-.174	-.105	-.125	-.183		-.306	-.287	-.254				16
17		-.050	-.073	-.069								17
18		-.173	-.196	-.296		-.340	-.353	-.444				18
19	-.209	-.270	-.280	-.309	-.326	-.365	-.361	-.438				19
20	-.226	-.270	-.277	-.347	-.352	-.365	-.358	-.435				20
21	-.261	-.259	-.276	-.350	-.403	-.363	-.350	-.419				21
22	-.209	-.088	-.128	-.160	-.222	-.234	-.248	-.407				22

Table 12 Continued

Pressure coefficients on swept wing

Configuration 3 M= 1.61 R= 3.6×10^6

Orif	Station 1	2	3	4	24	5	6	7	8	9	10	Orif
					α= 12		δ= 5.0					
1	.966	.279	.190	.153		.643	-.011	.857				1
2	-.096	-.303	-.320	-.344		-.354	-.377	-.420				2
3	-.183	-.296	-.312	-.325		-.335	-.353	-.421				3
4	-.143	-.300	-.316	-.325		-.332	-.346	-.426				4
5	-.154	-.276	-.320	-.325		-.331	-.340	-.448				5
6	-.167	-.229	-.319	-.328		-.328	-.339	-.454				6
7	-.172	-.212	-.320	-.329		-.330	-.340	-.449				7
8	-.180	-.215	-.328	-.330		-.339	-.340	-.451				8
9	-.182	-.220	-.330	-.337		-.343	-.340	-.454				9
10	-.184	-.212		-.330		-.340	-.339	-.442				10
11	-.187	-.208		-.332		-.336						11
12	-.186	-.200		-.328		-.333	-.334	-.445				12
13	-.190	-.197	-.241	-.326		-.330	-.335	-.474				13
14	-.184	-.194	-.231	-.324		-.325	-.334	-.437				14
15	-.190	-.208	-.209	-.313		-.337	-.332	-.457				15
16	-.181	-.107	-.132	-.198		-.329	-.309	-.256				16
17		-.035	-.057	-.059								17
18		-.213	-.236	-.343		-.358	-.372	-.462				18
19	-.264	-.317	-.327	-.356	-.358	-.386	-.379	-.462				19
20	-.271	-.317	-.325	-.384	-.380	-.388	-.376	-.460				20
21	-.317	-.305	-.319	-.333	-.403	-.387	-.370	-.442				21
22	-.218	-.132	-.171	-.163	-.279	-.241	-.236	-.423				22
					α= 12		δ= 10.0					
1	.968	.279	.191	.155		.645	-.013	.857				1
2	-.097	-.306	-.327	-.345		-.361	-.387	-.441				2
3	-.183	-.299	-.317	-.329		-.344	-.359	-.446				3
4	-.143	-.303	-.319	-.328		-.339	-.351	-.457				4
5	-.155	-.278	-.322	-.329		-.335	-.347	-.475				5
6	-.168	-.230	-.322	-.329		-.333	-.344	-.476				6
7	-.172	-.213	-.324	-.332		-.335	-.345	-.471				7
8	-.181	-.216	-.332	-.334		-.344	-.347	-.471				8
9	-.184	-.222	-.334	-.341		-.347	-.345	-.471				9
10	-.183	-.213		-.334		-.345	-.345	-.456				10
11	-.189	-.211		-.334		-.342						11
12	-.187	-.202		-.331		-.337	-.340	-.458				12
13	-.190	-.198	-.241	-.330		-.335	-.339	-.485				13
14	-.185	-.195	-.233	-.326		-.329	-.337	-.453				14
15	-.190	-.208	-.196	-.309		-.342	-.336	-.468				15
16	-.177	-.100	-.121	-.187		-.333	-.312	-.256				16
17		.018	.022	.073								17
18		-.265	-.281	-.379		-.360	-.376	-.473				18
19	-.310	-.370	-.376	-.366	-.360	-.392	-.387	-.472				19
20	-.333	-.373	-.360	-.347	-.358	-.394	-.381	-.470				20
21	-.368	-.358	-.289	-.272	-.406	-.395	-.373	-.453				21
22	-.317	-.193	-.226	-.206	-.341	-.238	-.220	-.418				22
					α= 12		δ= 20.0					
1	.965	.290	.212	.173		.660	.007	.869				1
2	-.093	-.303	-.323	-.346		-.359	-.385	-.442				2
3	-.179	-.295	-.312	-.324		-.339	-.355	-.447				3
4	-.139	-.299	-.316	-.324		-.334	-.349	-.471				4
5	-.151	-.271	-.321	-.326		-.332	-.345	-.489				5
6	-.166	-.225	-.320	-.327		-.329	-.340	-.488				6
7	-.169	-.210	-.321	-.330		-.330	-.342	-.484				7
8	-.179	-.213	-.331	-.332		-.339	-.345	-.484				8
9	-.181	-.220	-.334	-.339		-.344	-.344	-.478				9
10	-.181	-.210		-.332		-.343	-.344	-.462				10
11	-.186	-.208		-.333		-.340						11
12	-.183	-.201		-.328		-.334	-.338	-.465				12
13	-.188	-.196	-.240	-.328		-.333	-.336	-.487				13
14	-.181	-.195	-.229	-.326		-.324	-.336	-.459				14
15	-.187	-.204	-.152	-.198		-.335	-.329	-.468				15
16	-.164	-.079	-.094	-.149		-.321	-.299	-.256				16
17		.154	.391	.511								17
18		-.335	-.350	-.384		-.356	-.375	-.484				18
19	-.365	-.421	-.378	-.324	-.317	-.390	-.387	-.483				19
20	-.395	-.424	-.322	-.305	-.349	-.396	-.381	-.480				20
21	-.360	-.370	-.299	-.289	-.366	-.395	-.371	-.461				21
22	-.382	-.258	-.285	-.266	-.351	-.232	-.208	-.420				22

Table 12 Concluded

Pressure coefficients on swept wing

Configuration 3 M= 1.61 R= 3.6 x 10^6

Orif	Station 1	2	3	4	24	5	6	7	8	9	10	Orif
					α= 12		δ= 25.0					
1	.964	.293	.220	.177		.663	.018	.870				1
2	-.093	-.299	-.320	-.340		-.355	-.377	-.446				2
3	-.179	-.291	-.308	-.319		-.335	-.349	-.448				3
4	-.138	-.295	-.312	-.322		-.333	-.345	-.480				4
5	-.150	-.264	-.318	-.324		-.329	-.338	-.489				5
6	-.164	-.223	-.316	-.323		-.326	-.333	-.495				6
7	-.169	-.207	-.319	-.326		-.327	-.338	-.490				7
8	-.179	-.211	-.327	-.330		-.336	-.341	-.488				8
9	-.181	-.219	-.330	-.339		-.340	-.338	-.479				9
10	-.181	-.207		-.331		-.338	-.340	-.467				10
11	-.184	-.207		-.331		-.335						11
12	-.183	-.198		-.326		-.331	-.333	-.471				12
13	-.186	-.194	-.235	-.325		-.329	-.333	-.502				13
14	-.181	-.191	-.226	-.323		-.320	-.332	-.469				14
15	-.184	-.192	-.133	-.172		-.333	-.320	-.475				15
16	-.154	-.065	-.083	-.142		-.314	-.285	-.256				16
17		.115	.323	.429								17
18		-.385	-.376	-.374		-.353	-.370	-.485				18
19	-.375	-.449	-.333	-.309	-.305	-.388	-.381	-.487				19
20	-.399	-.415	-.319	-.304	-.339	-.392	-.378	-.483				20
21	-.370	-.376	-.315	-.309	-.357	-.392	-.371	-.466				21
22	-.395	-.306	-.306	-.300	-.340	-.229	-.208	-.424				22
					α= 15		δ= 0.0					
1	.998	.167	.000	-.028		.440	-.153	.706				1
2	-.125	-.339	-.358	-.386		-.396	-.418	-.467				2
3	-.200	-.331	-.349	-.368		-.378	-.397	-.468				3
4	-.168	-.331	-.350	-.362		-.374	-.385	-.502				4
5	-.179	-.319	-.353	-.359		-.369	-.380	-.515				5
6	-.191	-.280	-.351	-.361		-.366	-.379	-.514				6
7	-.193	-.247	-.349	-.361		-.369	-.377	-.510				7
8	-.205	-.243	-.355	-.361		-.372	-.375	-.506				8
9	-.209	-.246	-.359	-.366		-.374	-.374	-.503				9
10	-.211	-.236		-.360		-.370	-.373	-.480				10
11	-.214	-.234		-.361		-.364						11
12	-.211	-.225		-.342		-.347	-.366	-.482				12
13	-.211	-.221	-.282	-.340		-.344	-.366	-.506				13
14	-.207	-.219	-.265	-.330		-.346	-.366	-.479				14
15	-.212	-.226	-.214	-.312		-.355	-.362	-.495				15
16	-.190	-.120	-.183	-.243		-.344	-.343	-.262				16
17		-.028	-.065	-.063								17
18		-.181	-.241	-.313		-.371	-.396	-.506				18
19	-.222	-.262	-.275	-.319	-.359	-.390	-.398	-.502				19
20	-.219	-.260	-.262	-.318	-.377	-.390	-.356	-.498				20
21	-.260	-.239	-.256	-.250	-.362	-.345	-.304	-.477				21
22	-.214	-.079	-.142	-.164	-.250	-.266	-.262	-.442				22
					α=		δ=					

Table 13

Pressure coefficients on swept wing

Configuration 4 M = 1.61 R = 3.6 x 10^6

Orif	Station 1	2	3	4	24	5	6	7	8	9	10	Orif
					$\alpha = -15$		$\delta = 0.0$					
1	.592	.653	.625	.466		-.178	.390	-.226				1
2	.463	.577	.643	.660		.691	.717	.521				2
3	.454	.508	.590	.649		.629	.678	.420				3
4	.440	.462	.535	.563		.581	.627	.312				4
5	.412	.449	.487	.524		.547	.601	.231				5
6	.394	.449	.461	.491		.520	.575	.202				6
7	.406	.412	.434	.472		.496	.572	.178				7
8	.428	.403	.399	.451		.489	.580	.161				8
9	.418	.380	.412	.442		.496	.572	.126				9
10	.393	.395		.443		.500	.549	.107				10
11	.403	.401		.453		.506						11
12	.408	.405		.463		.499	.509	.015				12
13	.392	.408	.421	.444		.486	.477	-.003				13
14	.396	.383	.384	.406		.456	.424	-.147				14
15	.406	.319	.319	.333		.357	.326	-.154				15
16	.208	.000	.091	.031		.301	.303	.008				16
17	-.055	-.027	-.043	-.038								17
18	.348	.311	.319	.114		.249	.176	-.115				18
19	.233	.162	.172	.268	.225	.181	.148	-.126				19
20	.201	.180	.165	.192	.178	.206	.146	-.120				20
21	.225	.201	.191	.326	.292	.227	.160	-.107				21
22	.133	.209	.241	.205	.231	.247	.192	-.084				22
					$\alpha = -12$		$\delta = -30.0$					
1	.717	.683	.718	.615		.093	.623	.056				1
2	.426	.486	.515	.515		.557	.574	.430				2
3	.361	.406	.434	.501		.468	.520	.368				3
4	.346	.344	.392	.419		.444	.455	.278				4
5	.322	.322	.351	.383		.405	.437	.211				5
6	.299	.303	.326	.347		.368	.565	.187				6
7	.290	.282	.301	.315		.348	.608	.167				7
8	.281	.264	.258	.287		.323	.619	.160				8
9	.281	.244	.260	.299		.423	.621	.128				9
10	.262	.255		.311		.595	.594	.119				10
11	.264	.265		.338		.648						11
12	.274	.275		.582		.659	.556	.029				12
13	.265	.283	.333	.702		.643	.522	.013				13
14	.265	.274	.607	.753		.606	.486	-.151				14
15	.293	.335	.683	.787		.534	.412	-.154				15
16	.268	.451	.690	.757		.506	.400	.012				16
17	.278	.054	-.249	-.372								17
18	.269	.398	.634	.822		.438	.209	-.112				18
19	.320	.743	.836	.950	.458	.408	.270	-.099				19
20	.775	1.205	1.142	.597	-.138	.371	.269	-.066				20
21	.877	1.071	1.049	.551	-.304	.320	.257	-.051				21
22	.645	.710	.697	.266	-.268	.231	.219	-.046				22
					$\alpha = -12$		$\delta = -20.0$					
1	.716	.681	.717	.616		.088	.620	.139				1
2	.427	.489	.516	.522		.555	.577	.335				2
3	.361	.407	.439	.506		.473	.527	.278				3
4	.346	.346	.393	.420		.446	.461	.181				4
5	.323	.326	.351	.391		.406	.434	.121				5
6	.302	.306	.330	.348		.371	.407	.087				6
7	.290	.283	.300	.320		.353	.368	.071				7
8	.281	.263	.262	.292		.333	.377	.078				8
9	.278	.247	.265	.305		.337	.379	.075				9
10	.257	.258		.323		.339	.377	.075				10
11	.269	.267		.325		.344						11
12	.277	.277		.325		.354	.456	.014				12
13	.264	.285	.323	.316		.414	.462	-.004				13
14	.265	.276	.284	.351		.474	.436	-.153				14
15	.282	.235	.314	.544		.427	.377	-.162				15
16	.189	.235	.435	.604		.402	.356	.001				16
17	.098	.025	-.137	-.251								17
18	.144	.221	.419	.552		.350	.203	-.118				18
19	.294	.480	.579	.671	.433	.376	.257	-.110				19
20	.534	.765	.819	.500	.043	.367	.287	-.056				20
21	.566	.757	.826	.434	-.127	.352	.285	-.035				21
22	.436	.535	.564	.202	-.156	.289	.246	-.030				22

Table 13 Continued

Pressure coefficients on swept wing

Configuration 4 M= 1.61 R= 3.6 x 10^6

Orif	Station 1	2	3	4	24	5	6	7	8	9	10	Orif
					α= -12		δ= -10.0					
1	.700	.679	.713	.605		.059	.606	.104				1
2	.423	.496	.528	.530		.567	.591	.344				2
3	.363	.415	.449	.511		.481	.545	.292				3
4	.353	.351	.404	.423		.458	.481	.187				4
5	.329	.332	.360	.395		.416	.455	.130				5
6	.303	.313	.337	.356		.386	.425	.101				6
7	.296	.292	.309	.328		.371	.390	.083				7
8	.289	.268	.266	.305		.346	.399	.071				8
9	.290	.255	.274	.318		.351	.399	.047				9
10	.264	.264		.329		.351	.392	.034				10
11	.275	.277		.337		.358						11
12	.285	.284		.333		.359	.382	-.035				12
13	.272	.292	.328	.332		.354	.365	-.043				13
14	.277	.284	.298	.303		.335	.337	-.166				14
15	.289	.238	.240	.250		.250	.251	-.188				15
16	.146	.076	.113	.191		.207	.238	-.026				16
17	-.050	-.021	-.111	.087								17
18	.086	.064	.119	.165		.160	.110	-.143				18
19	.328	.385	.384	.377	.325	.098	.081	-.165				19
20	.319	.424	.466	.311	.342	.194	.062	-.161				20
21	.377	.414	.466	.260	.106	.243	.071	-.146				21
22	.199	.341	.372	.125	-.020	.227	.169	-.120				22
					α= -12		δ= - 5.0					
1	.705	.677	.711	.607		.062	.607	.099				1
2	.425	.493	.523	.528		.568	.588	.348				2
3	.366	.417	.445	.515		.483	.540	.289				3
4	.357	.350	.403	.429		.460	.482	.193				4
5	.333	.329	.361	.399		.418	.453	.131				5
6	.307	.307	.335	.360		.386	.426	.098				6
7	.296	.291	.306	.333		.371	.391	.085				7
8	.295	.270	.265	.310		.348	.398	.078				8
9	.292	.252	.273	.321		.355	.398	.052				9
10	.267	.263		.335		.357	.392	.036				10
11	.278	.273		.340		.363						11
12	.286	.283		.340		.366	.385	-.031				12
13	.273	.291	.331	.335		.358	.368	-.045				13
14	.278	.287	.297	.317		.337	.338	-.165				14
15	.292	.242	.247	.261		.248	.248	-.185				15
16	.142	.003	.064	.025		.196	.217	-.026				16
17	-.035	.005	-.011	-.012								17
18	.267	.123	.127	.135		.162	.115	-.142				18
19	.229	.224	.227	.208	.192	.087	.084	-.161				19
20	.192	.215	.226	.140	.155	.072	.067	-.166				20
21	.242	.205	.235	.131	.115	.118	.061	-.145				21
22	.116	.183	.201	.070	-.003	.146	.074	-.119				22
					α= -12		δ= 0.0					
1	.705	.678	.711	.605		.080	.608	.120				1
2	.426	.495	.520	.527		.571	.595	.346				2
3	.363	.413	.446	.517		.483	.541	.287				3
4	.357	.353	.402	.422		.460	.480	.186				4
5	.332	.338	.357	.397		.420	.455	.126				5
6	.306	.318	.332	.361		.392	.423	.094				6
7	.293	.293	.306	.329		.375	.384	.073				7
8	.292	.277	.264	.305		.343	.393	.064				8
9	.291	.258	.273	.320		.345	.396	.041				9
10	.262	.267		.334		.350	.390	.031				10
11	.278	.277		.342		.354						11
12	.284	.288		.338		.359	.379	-.033				12
13	.269	.297	.327	.333		.349	.366	-.052				13
14	.278	.290	.300	.308		.334	.335	-.166				14
15	.287	.243	.240	.252		.252	.246	-.195				15
16	.135	-.032	.033	-.010		.199	.209	-.031				16
17	-.093	-.060	-.060	-.062								17
18	.256	.234	.235	.041		.164	.110	-.148				18
19	.150	.081	.091	.150	.130	.085	.079	-.172				19
20	.119	.078	.077	.066	.045	.072	.059	-.169				20
21	.142	.109	.081	.164	.112	.085	.055	-.160				21
22	.055	.105	.080	.066	.067	.099	.069	-.131				22

Table 13 Continued

Pressure coefficients on swept wing

Configuration 4 M= 1.61 R=3.6 x 10^6

Orif	Station 1	2	3	4	24	5	6	7	8	9	10	Orif
					α= -12		δ= 5.0					
1	.705	.677	.709	.606		.069	.612	.108				1
2	.428	.500	.532	.528		.571	.601	.351				2
3	.365	.418	.449	.515		.493	.544	.294				3
4	.359	.350	.406	.430		.464	.487	.197				4
5	.334	.338	.364	.400		.429	.462	.134				5
6	.307	.313	.339	.360		.393	.432	.102				6
7	.296	.299	.310	.328		.376	.394	.085				7
8	.292	.271	.266	.309		.348	.401	.072				8
9	.292	.257	.273	.321		.356	.403	.047				9
10	.263	.264		.338		.356	.396	.030				10
11	.278	.276		.339		.363						11
12	.287	.287		.339		.363	.391	-.030				12
13	.270	.298	.326	.335		.380	.377	-.046				13
14	.276	.291	.299	.307		.340	.347	-.163				14
15	.290	.274	.257	.264		.269	.251	-.189				15
16	.163	.293	.218	.234		.232	.215	-.026				16
17	-.182	-.173	-.210	-.186								17
18	.169	.129	.152	-.037		.189	.129	-.145				18
19	.105	-.019	.001	.104	.116	.120	.099	-.163				19
20	.056	-.032	-.016	.011	-.001	.092	.078	-.160				20
21	.079	.033	-.020	.126	.048	.088	.078	-.149				21
22	-.046	.050	-.019	-.036	-.001	.086	.090	-.119				22
					α= -12		δ= 10.0					
1	.702	.679	.713	.610		.063	.604	.094				1
2	.428	.496	.525	.532		.573	.590	.351				2
3	.367	.418	.451	.515		.492	.541	.295				3
4	.359	.355	.406	.432		.465	.481	.195				4
5	.332	.333	.363	.403		.427	.455	.137				5
6	.306	.313	.343	.363		.391	.426	.112				6
7	.297	.294	.313	.335		.377	.386	.106				7
8	.295	.273	.271	.307		.346	.399	.098				8
9	.292	.257	.276	.322		.355	.415	.073				9
10	.266	.266		.337		.355	.451	.055				10
11	.275	.278		.345		.381						11
12	.284	.287		.349		.441	.441	-.019				12
13	.273	.296	.341	.418		.454	.414	-.036				13
14	.277	.335	.459	.492		.420	.370	-.166				14
15	.306	.529	.540	.526		.320	.273	-.182				15
16	.352	.574	.575	.514		.272	.224	-.019				16
17	.324	.207	-.085	-.126								17
18	.049	-.033	-.031	-.169		.193	.131	-.136				18
19	.032	-.160	-.146	-.086	.042	.114	.098	-.153				19
20	-.032	-.165	-.148	-.128	-.107	.084	.080	-.143				20
21	-.050	-.121	-.143	-.080	-.095	.064	.077	-.133				21
22	-.094	-.035	-.137	-.142	-.113	.055	.097	-.106				22
					α= -12		δ= 20.0					
1	.705	.676	.710	.604		.058	.604	.053				1
2	.428	.494	.527	.528		.573	.594	.400				2
3	.371	.415	.451	.514		.489	.546	.342				3
4	.359	.354	.407	.428		.465	.484	.245				4
5	.333	.331	.364	.401		.424	.457	.174				5
6	.306	.315	.338	.360		.392	.485	.145				6
7	.297	.293	.311	.331		.378	.520	.127				7
8	.294	.266	.271	.309		.354	.532	.114				8
9	.292	.253	.277	.323		.426	.524	.078				9
10	.268	.267		.337		.520	.501	.058				10
11	.280	.277		.434		.543						11
12	.288	.292		.551		.528	.452	-.015				12
13	.276	.335	.552	.596		.494	.417	-.026				13
14	.280	.574	.638	.641		.435	.365	-.164				14
15	.524	.659	.683	.623		.328	.275	-.163				15
16	.590	.663	.678	.471		.281	.232	-.003				16
17	.977	.701	.757	.684								17
18	-.109	-.264	-.277	-.349		.192	.133	-.118				18
19	-.192	-.347	-.344	-.358	-.016	.102	.100	-.139				19
20	-.165	-.345	-.337	-.340	-.275	.069	.093	-.133				20
21	-.200	-.325	-.333	-.334	-.266	.044	.099	-.126				21
22	-.221	-.113	-.309	-.311	-.225	.028	.109	-.104				22

Table 13 Continued

Pressure coefficients on swept wing

Configuration 4 M=1.61 R=3.6 x 10^6

Orif	Station 1	2	3	4	24	5	6	7	8	9	10	Orif
					α=-12		δ= 30.0					
1	.705	.677	.710	.601		.058	.601	-.020				1
2	.428	.494	.527	.527		.574	.593	.423				2
3	.366	.416	.449	.517		.486	.543	.354				3
4	.355	.353	.406	.432		.463	.503	.251				4
5	.333	.335	.363	.402		.420	.568	.180				5
6	.306	.314	.337	.360		.391	.572	.152				6
7	.297	.293	.310	.335		.379	.552	.127				7
8	.294	.271	.269	.308		.428	.549	.115				8
9	.292	.255	.277	.323		.544	.536	.082				9
10	.269	.265		.400		.569	.501	.064				10
11	.278	.277		.550		.573						11
12	.288	.287		.619		.550	.455	-.008				12
13	.274	.430	.624	.653		.508	.415	-.013				13
14	.285	.643	.685	.677		.440	.367	-.156				14
15	.564	.698	.709	.662		.323	.281	-.159				15
16	.545	.665	.662	.462		.285	.248	.000				16
17	1.611	1.194	1.080	.898								17
18	-.034	-.389	-.394	-.430		.184	.137	-.122				18
19	-.366	-.430	-.434	-.446	-.088	.093	.114	-.143				19
20	-.303	-.427	-.430	-.420	-.336	.057	.100	-.141				20
21	-.298	-.409	-.426	-.400	-.329	.030	.099	-.134				21
22	-.337	-.239	-.300	-.363	-.250	.023	.104	-.116				22
					α=- 9		δ= 0.0					
1	.781	.716	.749	.679		.289	.700	.407				1
2	.526	.420	.451	.462		.491	.517	.286				2
3	.285	.336	.361	.414		.391	.449	.202				3
4	.280	.282	.318	.346		.372	.379	.107				4
5	.260	.258	.282	.318		.342	.355	.049				5
6	.236	.243	.262	.283		.309	.318	.024				6
7	.224	.226	.243	.254		.278	.274	-.004				7
8	.217	.199	.200	.222		.232	.269	-.008				8
9	.224	.184	.196	.202		.233	.271	-.022				9
10	.206	.192		.222		.237	.262	-.039				10
11	.209	.202		.226		.239						11
12	.211	.207		.239		.249	.273	-.069				12
13	.207	.208	.232	.236		.245	.267	-.088				13
14	.206	.202	.213	.217		.243	.254	-.166				14
15	.204	.159	.164	.176		.181	.191	-.211				15
16	.075	-.064	-.008	-.042		.126	.157	-.050				16
17	-.101	-.051	-.063	-.062								17
18	.175	.164	.186	-.001		.097	.054	-.162				18
19	.081	.033	.024	.082	.068	.028	.027	-.188				19
20	.051	.008	.009	.007	-.016	.011	.009	-.197				20
21	.049	.036	.012	.091	.031	.013	-.005	-.194				21
22	.007	.037	.011	-.004	-.003	.028	-.005	-.170				22
					α=- 6		δ= -30.0					
1	.812	.712	.745	.715		.545	.734	.729				1
2	.237	.308	.339	.363		.370	.384	.196				2
3	.199	.207	.236	.289		.233	.309	.091				3
4	.188	.171	.206	.219		.246	.262	.034				4
5	.175	.152	.171	.197		.212	.244	-.007				5
6	.147	.140	.152	.173		.193	.210	-.023				6
7	.144	.135	.142	.156		.173	.178	-.043				7
8	.128	.109	.109	.124		.135	.153	-.059				8
9	.134	.091	.092	.097		.120	.150	-.065				9
10	.115	.103		.115		.120	.141	-.088				10
11	.117	.109		.116		.125						11
12	.124	.117		.122		.146	.155	-.078				12
13	.118	.117	.124	.165		.262	.185	-.109				13
14	.116	.112	.192	.434		.311	.234	-.090				14
15	.118	.288	.404	.485		.294	.239	-.193				15
16	.172	.385	.433	.442		.280	.238	-.034				16
17	.616	.433	.077	-.243								17
18	.190	.373	.397	.550		.244	.064	-.132				18
19	.227	.384	.461	.651	.215	.233	.078	-.162				19
20	.364	.548	.674	.380	-.248	.219	.114	-.161				20
21	.520	.774	.921	.533	-.365	.193	.131	-.150				21
22	.466	.584	.638	.251	-.315	.105	.109	-.108				22

Table 13 Continued

Pressure coefficients on swept wing

Configuration 4 M=1.61 R=3.6 x 10^6

Orif	Station 1	2	3	4	24	5	6	7	8	9	10	Orif
					α=- 6		δ= -20.0					
1	.813	.713	.742	.718		.546	.733	.725				1
2	.239	.310	.335	.369		.375	.382	.205				2
3	.194	.207	.234	.294		.235	.312	.093				3
4	.191	.171	.207	.223		.256	.265	.041				4
5	.173	.154	.168	.201		.226	.247	-.008				5
6	.149	.143	.149	.178		.200	.212	-.020				6
7	.143	.133	.140	.164		.176	.185	-.040				7
8	.132	.110	.109	.129		.136	.158	-.055				8
9	.135	.091	.094	.112		.124	.152	-.064				9
10	.117	.107		.118		.126	.146	-.085				10
11	.120	.114		.122		.127						11
12	.125	.116		.134		.133	.150	-.082				12
13	.121	.119	.132	.132		.139	.146	-.108				13
14	.121	.114	.121	.123		.141	.149	-.096				14
15	.114	.089	.097	.177		.099	.121	-.214				15
16	.093	.183	.208	.314		.099	.146	-.064				16
17	.447	.165	.125	-.042								17
18	.105	.185	.224	.277		.031	-.019	-.160				18
19	.135	.235	.275	.349	.187	.037	-.045	-.191				19
20	.243	.399	.464	.264	-.125	.087	-.054	-.186				20
21	.291	.466	.563	.299	-.234	.126	-.065	-.181				21
22	.243	.364	.430	.129	-.192	.109	-.014	-.166				22
					α=- 6		δ= -10.0					
1	.810	.714	.744	.715		.541	.730	.722				1
2	.237	.313	.336	.365		.370	.388	.203				2
3	.191	.213	.234	.297		.239	.310	.094				3
4	.186	.179	.209	.224		.257	.262	.042				4
5	.165	.157	.172	.204		.221	.246	-.004				5
6	.144	.146	.155	.180		.198	.214	-.019				6
7	.136	.135	.146	.159		.174	.185	-.038				7
8	.129	.112	.108	.129		.138	.160	-.051				8
9	.133	.095	.093	.111		.123	.150	-.064				9
10	.114	.106		.116		.125	.144	-.086				10
11	.116	.116		.121		.128						11
12	.121	.119		.129		.135	.151	-.074				12
13	.118	.122	.127	.132		.139	.148	-.108				13
14	.119	.115	.124	.123		.142	.150	-.099				14
15	.111	.070	.082	.093		.089	.107	-.218				15
16	.025	.024	.013	.045		.064	.095	-.066				16
17	.011	.061	.049	.050								17
18	.000	.030	.045	.036		.021	-.017	-.161				18
19	.108	.132	.144	.124	.099	-.037	-.041	-.189				19
20	.119	.175	.195	.084	.087	-.047	-.053	-.183				20
21	.151	.176	.214	.067	-.027	-.033	-.067	-.180				21
22	.036	.134	.164	.002	-.082	.010	-.067	-.163				22
					α=- 6		δ= - 5.0					
1	.813	.720	.743	.717		.543	.729	.714				1
2	.238	.318	.343	.366		.386	.384	.206				2
3	.191	.213	.242	.294		.239	.313	.097				3
4	.189	.182	.210	.227		.252	.264	.037				4
5	.170	.160	.172	.204		.228	.249	-.013				5
6	.153	.148	.160	.179		.206	.215	-.021				6
7	.142	.139	.144	.164		.182	.183	-.048				7
8	.133	.112	.108	.133		.143	.162	-.054				8
9	.134	.101	.093	.109		.127	.154	-.065				9
10	.118	.109		.119		.127	.146	-.084				10
11	.120	.118		.122		.130						11
12	.127	.124		.128		.140	.150	-.086				12
13	.122	.128	.132	.130		.141	.147	-.110				13
14	.121	.119	.129	.126		.148	.152	-.102				14
15	.117	.078	.089	.098		.088	.107	-.217				15
16	.022	-.017	-.023	-.010		.068	.084	-.065				16
17	-.038	.000	-.004	.001								17
18	.034	-.001	.007	.029		.025	-.013	-.162				18
19	.070	.061	.052	.059	.037	-.037	-.038	-.195				19
20	.051	.054	.051	-.005	.001	-.045	-.052	-.189				20
21	.055	.046	.050	-.003	-.019	-.049	-.064	-.185				21
22	-.018	.042	.037	-.048	-.115	-.026	-.062	-.169				22

Table 13 Continued

Pressure coefficients on swept wing

Configuration 4 M= 1.61 R= 3.6 x 10^6

Orif	Station 1	2	3	4	24	5	6	7	8	9	10	Orif
					α= - 6		δ= 0.0					
1	.811	.712	.744	.718		.537	.722	.713				1
2	.235	.306	.335	.363		.368	.376	.193				2
3	.188	.200	.232	.295		.232	.302	.081				3
4	.182	.168	.204	.218		.248	.253	.033				4
5	.163	.151	.169	.198		.217	.235	-.011				5
6	.144	.140	.155	.173		.195	.205	-.024				6
7	.135	.129	.146	.156		.171	.178	-.046				7
8	.127	.109	.108	.126		.135	.151	-.057				8
9	.129	.090	.095	.101		.119	.142	-.071				9
10	.110	.102		.112		.116	.130	-.088				10
11	.118	.110		.114		.119						11
12	.119	.111		.126		.125	.140	-.085				12
13	.113	.120	.131	.126		.132	.139	-.107				13
14	.114	.111	.121	.119		.133	.139	-.088				14
15	.100	.071	.084	.085		.081	.099	-.198				15
16	-.004	-.067	-.057	-.024		.048	.067	-.055				16
17	-.110	-.056	-.058	-.049								17
18	.083	.078	.102	-.061		.014	-.025	-.170				18
19	-.001	-.050	-.045	-.009	-.016	-.047	-.053	-.189				19
20	-.020	-.066	-.064	-.071	-.084	-.062	-.066	-.185				20
21	-.042	-.055	-.064	-.004	-.047	-.060	-.082	-.185				21
22	-.060	-.031	-.063	-.075	-.074	-.053	-.073	-.173				22
					α= - 6		δ= 5.0					
1	.814	.712	.742	.714		.540	.727	.714				1
2	.235	.312	.337	.363		.375	.384	.200				2
3	.191	.207	.235	.292		.239	.310	.097				3
4	.191	.176	.207	.222		.254	.264	.036				4
5	.167	.156	.167	.197		.222	.245	-.005				5
6	.150	.142	.153	.178		.199	.215	-.021				6
7	.140	.129	.142	.160		.174	.184	-.044				7
8	.131	.107	.106	.123		.136	.157	-.060				8
9	.129	.093	.092	.100		.121	.146	-.060				9
10	.114	.105		.114		.121	.140	-.083				10
11	.118	.113		.118		.127						11
12	.122	.121		.128		.133	.152	-.083				12
13	.117	.118	.126	.132		.138	.148	-.107				13
14	.121	.112	.121	.121		.140	.146	-.098				14
15	.107	.088	.093	.093		.087	.104	-.209				15
16	.010	.149	.094	.120		.054	.075	-.063				16
17	-.162	-.135	-.149	-.171								17
18	.021	.007	.021	-.121		.023	-.012	-.167				18
19	-.036	-.122	-.113	-.049	-.020	-.039	-.041	-.190				19
20	-.052	-.144	-.122	-.116	-.119	-.034	-.057	-.188				20
21	-.087	-.128	-.132	-.074	-.099	-.035	-.067	-.184				21
22	-.080	-.075	-.131	-.125	-.121	-.043	-.065	-.173				22
					α= - 6		δ= 10.0					
1	.812	.713	.740	.713		.536	.725	.711				1
2	.237	.306	.338	.367		.373	.384	.202				2
3	.187	.207	.233	.292		.244	.313	.093				3
4	.184	.178	.207	.221		.255	.261	.036				4
5	.165	.153	.170	.199		.221	.243	-.011				5
6	.146	.138	.155	.176		.198	.216	-.025				6
7	.141	.133	.146	.158		.176	.181	-.045				7
8	.131	.111	.107	.127		.138	.159	-.058				8
9	.133	.092	.093	.107		.125	.153	-.064				9
10	.115	.107		.118		.125	.141	-.083				10
11	.121	.115		.121		.126						11
12	.123	.118		.129		.136	.152	-.084				12
13	.120	.126	.128	.130		.142	.148	-.108				13
14	.116	.120	.173	.178		.150	.146	-.103				14
15	.112	.334	.349	.337		.120	.105	-.214				15
16	.148	.384	.392	.351		.120	.069	-.063				16
17	.156	.159	.040	-.073								17
18	-.067	-.105	-.092	-.211		.078	-.016	-.165				18
19	-.090	-.230	-.217	-.177	-.041	.019	-.032	-.193				19
20	-.103	-.246	-.227	-.200	-.173	-.005	-.021	-.187				20
21	-.170	-.234	-.234	-.208	-.183	-.022	-.028	-.184				21
22	-.146	-.093	-.222	-.227	-.184	-.047	-.029	-.168				22

Table[13] Continued

Pressure coefficients on swept wing

Configuration 4 M=1.61 R=3.6 x 10^6

Orif	Station 1	2	3	4	24	5	6	7	8	9	10	Orif
					α=- 6		δ= 20.0					
1	.809	.710	.745	.718		.542	.727	.710				1
2	.237	.308	.342	.373		.375	.387	.206				2
3	.193	.207	.240	.299		.249	.315	.102				3
4	.187	.172	.210	.224		.260	.266	.040				4
5	.168	.150	.173	.207		.228	.245	-.012				5
6	.151	.139	.159	.181		.209	.216	-.023				6
7	.141	.135	.150	.165		.178	.189	-.043				7
8	.127	.112	.108	.135		.143	.164	-.058				8
9	.133	.093	.097	.115		.129	.153	-.065				9
10	.116	.105		.123		.125	.148	-.085				10
11	.123	.113		.126		.131						11
12	.124	.117		.140		.147	.159	-.086				12
13	.120	.123	.204	.313		.230	.174	-.106				13
14	.119	.317	.426	.419		.278	.211	-.101				14
15	.238	.441	.462	.417		.221	.177	-.201				15
16	.346	.477	.480	.321		.201	.143	-.040				16
17	.607	.454	.505	.434								17
18	-.172	-.265	-.254	-.323		.114	.052	-.145				18
19	-.240	-.359	-.343	-.334	-.106	.038	.027	-.173				19
20	-.254	-.366	-.349	-.327	-.278	.006	.007	-.166				20
21	-.240	-.350	-.348	-.339	-.269	-.020	-.010	-.162				21
22	-.297	-.180	-.275	-.320	-.246	-.054	-.015	-.143				22
					α=- 6		δ= 30.0					
1	.814	.719	.739	.707		.536	.725	.712				1
2	.237	.313	.340	.367		.377	.389	.207				2
3	.193	.207	.235	.296		.249	.320	.101				3
4	.188	.173	.205	.227		.261	.269	.043				4
5	.168	.153	.172	.205		.230	.249	-.007				5
6	.149	.142	.156	.179		.207	.219	-.022				6
7	.141	.137	.147	.162		.183	.189	-.039				7
8	.130	.112	.110	.134		.146	.168	-.059				8
9	.129	.094	.095	.110		.128	.159	-.062				9
10	.117	.101		.121		.131	.151	-.084				10
11	.121	.112		.124		.142						11
12	.121	.120		.249		.249	.213	-.064				12
13	.120	.126	.351	.416		.318	.270	-.066				13
14	.119	.405	.458	.455		.310	.275	-.104				14
15	.263	.467	.477	.437		.241	.214	-.178				15
16	.328	.505	.479	.347		.222	.182	-.027				16
17	1.520	1.004	.897	.767								17
18	-.145	-.375	-.370	-.363		.121	.078	-.134				18
19	-.375	-.427	-.409	-.371	-.119	.044	.041	-.168				19
20	-.334	-.427	-.405	-.369	-.309	.005	.016	-.167				20
21	-.337	-.417	-.392	-.371	-.306	-.024	-.004	-.163				21
22	-.371	-.277	-.318	-.335	-.259	-.056	-.009	-.144				22
					α=- 3		δ= 0.0					
1	.830	.692	.734	.717		.677	.713	.833				1
2	.151	.167	.196	.224		.235	.227	.080				2
3	.112	.084	.076	.142		.084	.133	-.085				3
4	.101	.068	.090	.098		.106	.113	-.055				4
5	.083	.060	.069	.072		.091	.098	-.057				5
6	.064	.049	.050	.055		.067	.081	-.072				6
7	.054	.042	.043	.040		.052	.061	-.079				7
8	.052	.029	.011	.015		.027	.027	-.102				8
9	.045	.009	-.001	-.004		.014	.022	-.091				9
10	.043	.021		-.002		.008	.007	-.119				10
11	.035	.026		.007		.006						11
12	.038	.031		.016		.018	.014	-.121				12
13	.045	.037	.032	.022		.014	.021	-.127				13
14	.040	.028	.034	.015		.031	.021	.002				14
15	.025	.003	.006	-.011		-.014	-.020	-.168				15
16	-.063	-.059	-.083	-.040		-.051	-.015	-.002				16
17	-.093	-.055	-.059	-.055								17
18	.014	-.017	.009	-.152		-.075	-.127	-.220				18
19	-.077	-.127	-.132	-.130	-.106	-.146	-.157	-.200				19
20	-.069	-.140	-.146	-.164	-.167	-.151	-.152	-.194				20
21	-.121	-.144	-.147	-.114	-.161	-.135	-.150	-.216				21
22	-.105	-.084	-.131	-.144	-.150	-.126	-.144	-.213				22

Table 13 Continued

Pressure coefficients on swept wing

Configuration 4 M= 1.61 R=3.6 x 10^6

Orif	Station 1	2	3	4	24	5	6	7	8	9	10	Orif
					α= 0		δ= -30.0					
1	.866	.833	.729	.700		.730	.615	.852				1
2	.108	.083	.109	.135		.162	.153	.083				2
3	.050	.031	.040	.155		.064	.067	-.021				3
4	.057	.012	.017	.018		.021	.026	-.005				4
5	.037	.002	-.001	.008		.007	.015	.000				5
6	.023	-.003	-.005	-.013		-.005	-.007	-.010				6
7	.015	-.003	-.011	-.016		-.017	-.021	-.003				7
8	.015	-.019	-.031	-.033		-.036	-.033	-.028				8
9	.005	-.032	-.042	-.048		-.050	-.032	-.015				9
10	.004	-.027		-.038		-.050	-.047	-.037				10
11	.002	-.018		-.038		-.044						11
12	.000	-.010		.016		.002	-.041	-.072				12
13	-.007	-.007	.076	.233		.093	-.041	-.060				13
14	-.002	.037	.268	.270		.110	-.030	.037				14
15	-.007	.294	.300	.280		.078	-.016	-.050				15
16	.067	.324	.312	.241		.067	.014	.068				16
17	1.396	.829	.586	.390								17
18	.064	.239	.295	.317		.019	-.121	-.105				18
19	.170	.251	.320	.247	.048	.007	-.130	-.138				19
20	.206	.319	.341	.078	-.221	-.012	-.124	-.163				20
21	.352	.404	.391	.112	-.373	-.030	-.112	-.168				21
22	.313	.350	.345	.067	-.281	-.009	-.027	-.162				22
					α= 0		δ= -20.0					
1	.862	.835	.732	.700		.734	.617	.862				1
2	.106	.076	.107	.134		.164	.157	.084				2
3	.050	.025	.039	.148		.061	.071	-.021				3
4	.054	.008	.012	.021		.020	.032	-.005				4
5	.036	-.003	-.003	.007		.008	.017	-.001				5
6	.019	-.007	-.007	-.012		-.006	-.004	-.016				6
7	.014	-.005	-.015	-.018		-.016	-.015	-.003				7
8	.009	-.023	-.033	-.035		-.034	-.028	-.032				8
9	.005	-.035	-.042	-.050		-.049	-.030	-.016				9
10	-.003	-.031		-.040		-.047	-.043	-.036				10
11	-.002	-.021		-.040		-.041						11
12	-.003	-.015		-.029		-.036	-.037	-.068				12
13	-.007	-.010	-.019	-.030		-.035	-.036	-.059				13
14	-.005	-.010	-.019	-.029		-.032	-.043	.044				14
15	-.014	-.042	.038	.122		-.061	-.045	-.049				15
16	-.007	.088	.167	.220		-.050	-.007	.065				16
17	.579	.306	.294	.200								17
18	.012	.104	.167	.190		-.108	-.150	-.106				18
19	.052	.144	.189	.137	.030	-.143	-.172	-.140				19
20	.084	.218	.237	.035	-.157	-.098	-.179	-.165				20
21	.118	.270	.283	.077	-.297	-.079	-.181	-.172				21
22	.098	.210	.225	-.005	-.235	-.047	-.156	-.164				22
					α= 0		δ= -10.0					
1	.862	.837	.732	.695		.733	.623	.862				1
2	.105	.078	.112	.131		.165	.159	.085				2
3	.050	.024	.040	.148		.066	.067	-.024				3
4	.054	.009	.017	.019		.019	.030	-.006				4
5	.036	.001	-.002	.004		.010	.020	-.001				5
6	.021	-.002	-.005	-.015		-.002	-.002	-.015				6
7	.013	-.002	-.011	-.019		-.015	-.012	-.007				7
8	.007	-.019	-.034	-.039		-.032	-.024	-.029				8
9	.004	-.032	-.041	-.052		-.049	-.030	-.016				9
10	-.002	-.029		-.039		-.046	-.042	-.044				10
11	-.006	-.019		-.042		-.039						11
12	-.004	-.011		-.030		-.035	-.036	-.059				12
13	-.003	-.007	-.015	-.031		-.033	-.036	-.050				13
14	-.002	-.009	-.013	-.029		-.024	-.038	.067				14
15	-.021	-.041	-.036	-.050		-.060	-.052	-.054				15
16	-.077	-.060	-.055	-.002		-.072	-.029	.062				16
17	.069	.120	.023	-.051								17
18	-.080	-.042	-.028	-.007		-.107	-.150	-.107				18
19	-.050	.010	.011	-.040	-.056	-.161	-.176	-.142				19
20	.017	.041	.045	-.070	-.064	-.165	-.183	-.167				20
21	.002	.048	.056	-.056	-.125	-.160	-.178	-.167				21
22	-.069	.020	.025	-.100	-.163	-.130	-.162	-.162				22

Table13 Continued

Pressure coefficients on swept wing

Configuration 4 M=1.61 R=3.6 x 10^6

Orif	Station 1	2	3	4	24	5	6	7	8	9	10	Orif
					α= 0		δ= - 5.0					
1	.863	.838	.731	.700		.729	.626	.864				1
2	.108	.080	.110	.131		.167	.163	.086				2
3	.052	.030	.042	.148		.069	.073	-.021				3
4	.058	.012	.016	.021		.022	.034	-.006				4
5	.040	.004	-.004	.011		.013	.021	.004				5
6	.021	.001	-.003	-.013		.001	-.002	-.014				6
7	.013	-.002	-.012	-.013		-.011	-.009	.000				7
8	.007	-.019	-.034	-.033		-.034	-.026	-.025				8
9	.003	-.034	-.040	-.047		-.049	-.028	-.013				9
10	.004	-.028		-.036		-.041	-.039	-.033				10
11	-.007	-.017		-.037		-.037						11
12	-.005	-.009		-.027		-.030	-.031	-.054				12
13	.000	-.006	-.018	-.023		-.031	-.033	-.051				13
14	-.002	-.007	-.012	-.021		-.025	-.035	.068				14
15	-.013	-.036	-.033	-.041		-.058	-.046	-.051				15
16	-.075	-.052	-.056	-.010		-.067	-.021	.066				16
17	-.103	-.057	-.075	-.028								17
18	-.075	-.062	-.050	-.060		-.108	-.144	-.103				18
19	-.076	-.065	-.064	-.108	-.100	-.158	-.170	-.138				19
20	-.044	-.065	-.065	-.130	-.133	-.155	-.174	-.160				20
21	-.078	-.065	-.066	-.112	-.116	-.155	-.172	-.164				21
22	-.113	-.050	-.065	-.129	-.151	-.148	-.152	-.160				22
					α= 0		δ= 0.0					
1	.866	.835	.733	.696		.734	.627	.860				1
2	.106	.082	.113	.135		.166	.160	.085				2
3	.051	.030	.044	.150		.067	.070	-.021				3
4	.055	.014	.020	.022		.021	.035	-.006				4
5	.035	.004	.000	.009		.010	.021	.000				5
6	.020	.001	-.003	-.010		.001	.003	-.014				6
7	.013	-.001	-.010	-.015		-.011	-.010	-.004				7
8	.007	-.015	-.032	-.031		-.032	-.024	-.029				8
9	.003	-.031	-.039	-.046		-.045	-.029	-.017				9
10	-.001	-.026		-.038		-.044	-.040	-.039				10
11	-.007	-.018		-.038		-.040						11
12	-.005	-.009		-.030		-.034	-.036	-.054				12
13	-.003	-.005	-.016	-.027		-.031	-.036	-.048				13
14	-.002	-.007	-.013	-.027		-.029	-.036	.066				14
15	-.015	-.039	-.037	-.044		-.059	-.050	-.056				15
16	-.074	-.057	-.075	-.041		-.070	-.031	.064				16
17	-.078	-.048	-.049	-.047								17
18	-.025	-.044	-.036	-.116		-.107	-.146	-.105				18
19	-.095	-.141	-.141	-.138	-.121	-.161	-.172	-.138				19
20	-.089	-.152	-.154	-.169	-.162	-.165	-.178	-.158				20
21	-.129	-.143	-.153	-.150	-.166	-.164	-.177	-.166				21
22	-.095	-.091	-.150	-.145	-.158	-.157	-.162	-.157				22
					α= 0		δ= 5.0					
1	.865	.841	.728	.698		.730	.628	.860				1
2	.105	.081	.111	.135		.165	.161	.086				2
3	.050	.029	.043	.151		.064	.071	-.024				3
4	.054	.013	.020	.021		.020	.036	-.007				4
5	.036	.004	.000	.008		.007	.022	-.002				5
6	.019	.000	-.004	-.010		.000	.002	-.017				6
7	.013	-.003	-.011	-.016		-.013	-.009	-.005				7
8	.006	-.016	-.032	-.033		-.030	-.024	-.032				8
9	.002	-.032	-.039	-.046		-.045	-.030	-.017				9
10	-.002	-.026		-.039		-.043	-.039	-.041				10
11	-.006	-.019		-.038		-.037						11
12	-.006	-.010		-.029		-.032	-.037	-.052				12
13	-.002	-.007	-.015	-.028		-.030	-.036	-.050				13
14	-.001	-.008	-.013	-.028		-.027	-.036	.069				14
15	-.016	-.037	-.034	-.045		-.058	-.050	-.049				15
16	-.081	.018	-.008	.006		-.067	-.034	.068				16
17	-.089	-.069	-.073	-.071								17
18	-.059	-.079	-.071	-.166		-.107	-.150	-.103				18
19	-.121	-.192	-.185	-.173	-.142	-.161	-.173	-.136				19
20	-.123	-.205	-.199	-.196	-.191	-.166	-.179	-.158				20
21	-.174	-.198	-.199	-.205	-.185	-.161	-.178	-.163				21
22	-.127	-.092	-.192	-.167	-.178	-.150	-.163	-.160				22

Table 13 Continued

Pressure coefficients on swept wing

Configuration 4 M= 1.61 R= 3.6 x 10^6

Orif	Station 1	2	3	4	24	5	6	7	8	9	10	Orif
					α= 0		δ= 10.0					
1	.867	.843	.732	.698		.731	.628	.860				1
2	.105	.083	.115	.135		.166	.163	.081				2
3	.050	.030	.043	.149		.065	.072	-.029				3
4	.054	.013	.021	.021		.023	.037	-.009				4
5	.036	.004	-.002	.007		.012	.023	-.006				5
6	.020	.000	-.006	-.011		.002	.004	-.019				6
7	.013	-.002	-.013	-.016		-.011	-.008	-.009				7
8	.007	-.017	-.034	-.032		-.032	-.023	-.036				8
9	.003	-.032	-.041	-.045		-.046	-.026	-.020				9
10	-.002	-.028		-.041		-.045	-.037	-.045				10
11	-.007	-.018		-.040		-.039						11
12	-.006	-.009		-.032		-.033	-.034	-.056				12
13	-.002	-.006	-.017	-.029		-.030	-.035	-.047				13
14	-.001	-.007	-.008	-.026		-.026	-.035	.068				14
15	-.015	.163	.168	.129		-.058	-.049	-.049				15
16	-.001	.224	.218	.159		-.067	-.036	.065				16
17	.019	.050	.006	-.030								17
18	-.127	-.163	-.161	-.238		-.105	-.146	-.103				18
19	-.170	-.279	-.273	-.272	-.193	-.153	-.171	-.134				19
20	-.213	-.292	-.283	-.250	-.242	-.144	-.177	-.163				20
21	-.245	-.288	-.283	-.319	-.212	-.126	-.178	-.165				21
22	-.241	-.114	-.234	-.241	-.221	-.130	-.162	-.155				22
					α= 0		δ= 20.0					
1	.865	.837	.733	.702		.735	.631	.863				1
2	.104	.086	.112	.140		.168	.164	.089				2
3	.051	.030	.044	.152		.069	.073	-.021				3
4	.038	.013	.019	.024		.024	.036	-.001				4
5	.038	.007	.000	.011		.011	.020	.009				5
6	.021	.004	-.003	-.010		.005	.001	-.012				6
7	.013	.005	-.011	-.011		-.009	-.007	.002				7
8	.011	-.014	-.031	-.029		-.027	-.018	-.030				8
9	.006	-.030	-.040	-.042		-.043	-.027	-.014				9
10	.004	-.022		-.034		-.036	-.039	-.036				10
11	.000	-.016		-.037		-.030						11
12	.000	-.007		-.022		-.027	-.028	-.061				12
13	.001	-.003	-.011	-.006		-.026	-.031	-.057				13
14	.001	.096	.220	.189		-.015	-.032	.046				14
15	.011	.271	.271	.220		-.030	-.040	-.050				15
16	.181	.315	.292	.181		-.013	-.007	.064				16
17	.409	.261	.280	.209								17
18	-.222	-.276	-.271	-.278		-.061	-.142	-.107				18
19	-.287	-.366	-.359	-.368	-.254	-.100	-.167	-.137				19
20	-.305	-.378	-.362	-.341	-.311	-.084	-.177	-.163				20
21	-.292	-.373	-.367	-.379	-.280	-.097	-.169	-.162				21
22	-.346	-.215	-.242	-.320	-.258	-.118	-.136	-.155				22
					α= 0		δ= 30.0					
1	.871	.837	.735	.703		.731	.636	.861				1
2	.110	.087	.111	.141		.172	.168	.089				2
3	.054	.034	.043	.155		.071	.074	-.026				3
4	.062	.017	.019	.024		.028	.038	-.001				4
5	.042	.004	.001	.012		.013	.029	.001				5
6	.024	.003	-.003	-.007		.006	.007	-.013				6
7	.018	.003	-.011	-.009		-.010	-.006	.000				7
8	.009	-.013	-.028	-.022		-.028	-.023	-.032				8
9	.004	-.028	-.039	-.043		-.041	-.019	-.012				9
10	.006	-.021		-.034		-.037	-.036	-.035				10
11	-.002	-.013		-.029		-.033						11
12	-.004	-.007		-.023		-.027	-.030	-.060				12
13	.006	-.002	.108	.200		-.005	-.029	-.057				13
14	.004	.221	.273	.255		.052	-.026	.038				14
15	.058	.294	.282	.227		.040	-.026	-.047				15
16	.171	.364	.329	.263		.047	.010	.066				16
17	1.387	.806	.618	.445								17
18	-.206	-.390	-.384	-.323		-.028	-.139	-.103				18
19	-.411	-.440	-.409	-.349	-.225	-.050	-.164	-.127				19
20	-.384	-.439	-.404	-.354	-.292	-.065	-.150	-.153				20
21	-.378	-.428	-.389	-.361	-.306	-.089	-.132	-.152				21
22	-.406	-.309	-.316	-.337	-.253	-.113	-.046	-.148				22

Table 13 Continued

Pressure coefficients on swept wing

Configuration 4 M= 1.61 R=3.6 x 10^6

Orif	Station 1	2	3	4	24	5	6	7	8	9	10	Orif
					α= 3		δ= 0.0					
1	.888	.813	.721	.631		.746	.463	.869				1
2	.054	-.036	-.036	-.047		-.042	-.039	-.028				2
3	-.021	-.039	-.050	.019		-.036	-.033	-.024				3
4	-.001	-.052	-.065	-.073		-.064	-.056	-.062				4
5	-.014	-.068	-.069	-.073		-.080	-.065	-.048				5
6	-.031	-.061	-.080	-.090		-.087	-.080	-.066				6
7	-.040	-.063	-.083	-.093		-.099	-.098	-.059				7
8	-.049	-.069	-.095	-.104		-.112	-.098	-.082				8
9	-.050	-.083	-.100	-.119		-.120	-.102	-.074				9
10	-.052	-.076		-.112		-.116	-.117	-.087				10
11	-.060	-.068		-.111		-.114						11
12	-.056	-.061		-.098		-.101	-.106	-.135				12
13	-.057	-.057	-.069	-.096		-.107	-.111	-.128				13
14	-.052	-.058	-.071	-.092		-.093	-.113	-.037				14
15	-.064	-.086	-.090	-.100		-.128	-.114	-.116				15
16	-.094	-.067	-.080	-.068		-.125	-.083	.001				16
17	-.081	-.046	-.047	-.048								17
18	-.049	-.093	-.093	-.130		-.168	-.200	-.165				18
19	-.134	-.172	-.174	-.207	-.195	-.209	-.221	-.187				19
20	-.113	-.182	-.182	-.200	-.207	-.207	-.221	-.216				20
21	-.158	-.164	-.184	-.200	-.241	-.202	-.213	-.229				21
22	-.109	-.071	-.161	-.166	-.199	-.183	-.191	-.249				22
					α= 6		δ= -30.0					
1	.892	.708	.620	.538		.765	.292	.903				1
2	.002	-.143	-.154	-.171		-.172	-.174	-.140				2
3	-.089	-.133	-.151	-.135		-.155	-.159	-.128				3
4	-.050	-.116	-.166	-.172		-.171	-.178	-.164				4
5	-.063	-.123	-.170	-.170		-.176	-.177	-.172				5
6	-.080	-.114	-.171	-.186		-.180	-.182	-.158				6
7	-.083	-.112	-.150	-.186		-.186	-.192	-.173				7
8	-.099	-.120	-.157	-.202		-.202	-.199	-.204				8
9	-.093	-.133	-.164	-.212		-.211	-.197	-.238				9
10	-.097	-.121		-.200		-.205	-.205	-.293				10
11	-.100	-.121		-.187		-.173						11
12	-.104	-.111		.024		-.066	-.198	-.308				12
13	-.104	-.107	.046	.076		-.064	-.199	-.308				13
14	-.099	-.082	.143	.089		-.066	-.198	-.232				14
15	-.103	.178	.156	.090		-.093	-.189	-.279				15
16	-.048	.217	.176	.034		-.105	-.151	-.125				16
17	1.514	.980	.862	.717								17
18	-.169	.048	.095	.126		-.135	-.258	-.342				18
19	.037	.062	.077	.068	-.084	-.157	-.265	-.339				19
20	.107	.201	.161	-.071	-.306	-.176	-.241	-.346				20
21	.165	.295	.226	-.030	-.379	-.182	-.163	-.341				21
22	.206	.245	.190	-.067	-.306	-.116	-.071	-.349				22
					α= 6		δ= -20.0					
1	.894	.710	.624	.534		.766	.294	.904				1
2	.006	-.142	-.153	-.167		-.174	-.177	-.136				2
3	-.082	-.132	-.150	-.137		-.155	-.158	-.128				3
4	-.046	-.114	-.164	-.169		-.171	-.177	-.169				4
5	-.064	-.125	-.172	-.170		-.178	-.177	-.166				5
6	-.076	-.112	-.170	-.185		-.180	-.181	-.160				6
7	-.080	-.112	-.145	-.188		-.187	-.192	-.173				7
8	-.093	-.121	-.157	-.200		-.205	-.200	-.207				8
9	-.095	-.131	-.163	-.214		-.211	-.197	-.248				9
10	-.095	-.122		-.199		-.208	-.202	-.292				10
11	-.099	-.117		-.187		-.207						11
12	-.099	-.111		-.164		-.201	-.201	-.302				12
13	-.101	-.105	-.126	-.164		-.202	-.201	-.304				13
14	-.099	-.107	-.124	-.157		-.192	-.202	-.230				14
15	-.103	-.130	-.135	-.061		-.212	-.204	-.285				15
16	-.126	-.046	-.021	.049		-.207	-.168	-.129				16
17	.744	.473	.463	.331								17
18	-.117	-.066	-.039	.030		-.244	-.278	-.341				18
19	-.056	.067	.088	-.022	-.120	-.281	-.292	-.334				19
20	-.002	.097	.104	-.094	-.203	-.247	-.289	-.335				20
21	.000	.132	.133	-.067	-.315	-.221	-.278	-.334				21
22	-.018	.092	.087	-.101	-.286	-.110	-.212	-.342				22

Table 13 Continued

Pressure coefficients on swept wing

Configuration 4 M=1.61 R=3.6 x 10^6

Orif	Station 1	2	3	4	24	5	6	7	8	9	10	Orif
					α= 6		δ= -10.0					
1	.891	.705	.621	.538		.764	.292	.899				1
2	.003	-.144	-.163	-.164		-.173	-.179	-.138				2
3	-.087	-.132	-.151	-.132		-.153	-.161	-.125				3
4	-.049	-.117	-.170	-.167		-.168	-.176	-.167				4
5	-.062	-.131	-.174	-.169		-.174	-.178	-.165				5
6	-.078	-.117	-.175	-.184		-.179	-.182	-.157				6
7	-.084	-.116	-.151	-.189		-.186	-.194	-.168				7
8	-.096	-.125	-.165	-.202		-.203	-.199	-.201				8
9	-.097	-.137	-.166	-.211		-.210	-.195	-.237				9
10	-.097	-.125		-.198		-.206	-.205	-.291				10
11	-.099	-.124		-.183		-.205						11
12	-.102	-.117		-.162		-.203	-.195	-.301				12
13	-.104	-.109	-.130	-.158		-.202	-.197	-.304				13
14	-.097	-.111	-.125	-.151		-.192	-.202	-.233				14
15	-.106	-.135	-.146	-.163		-.214	-.207	-.283				15
16	-.154	-.139	-.134	-.060		-.212	-.168	-.130				16
17	.149	.148	-.012	-.202								17
18	-.158	-.124	-.108	-.095		-.246	-.275	-.339				18
19	-.138	-.097	-.099	-.177	-.216	-.282	-.297	-.334				19
20	-.088	-.077	-.085	-.191	-.191	-.273	-.288	-.337				20
21	-.108	-.077	-.078	-.166	-.230	-.264	-.277	-.332				21
22	-.110	-.043	-.074	-.142	-.213	-.174	-.228	-.343				22
					α= 6		δ= -5.0					
1	.893	.710	.622	.535		.767	.297	.895				1
2	.002	-.142	-.156	-.166		-.171	-.174	-.136				2
3	-.086	-.133	-.148	-.135		-.150	-.156	-.131				3
4	-.050	-.114	-.165	-.167		-.167	-.175	-.164				4
5	-.060	-.123	-.174	-.166		-.176	-.174	-.165				5
6	-.080	-.114	-.172	-.181		-.179	-.181	-.161				6
7	-.080	-.110	-.149	-.186		-.178	-.192	-.164				7
8	-.097	-.121	-.165	-.193		-.202	-.196	-.197				8
9	-.096	-.132	-.167	-.213		-.208	-.196	-.239				9
10	-.096	-.121		-.191		-.202	-.206	-.281				10
11	-.103	-.119		-.178		-.200						11
12	-.104	-.109		-.161		-.195	-.195	-.302				12
13	-.103	-.106	-.127	-.153		-.195	-.196	-.303				13
14	-.098	-.107	-.121	-.137		-.189	-.199	-.230				14
15	-.103	-.119	-.135	-.148		-.210	-.200	-.274				15
16	-.123	-.100	-.105	-.053		-.206	-.166	-.122				16
17	-.142	-.114	-.128	-.101								17
18	-.139	-.135	-.140	-.144		-.239	-.273	-.335				18
19	-.171	-.177	-.190	-.254	-.252	-.275	-.289	-.328				19
20	-.140	-.177	-.193	-.238	-.243	-.266	-.288	-.334				20
21	-.162	-.185	-.190	-.242	-.277	-.263	-.276	-.330				21
22	-.117	-.065	-.120	-.153	-.209	-.187	-.232	-.339				22
					α= 6		δ= 0.0					
1	.894	.710	.623	.539		.763	.313	.902				1
2	.009	-.127	-.137	-.147		-.145	-.145	-.110				2
3	-.078	-.121	-.137	-.115		-.129	-.129	-.093				3
4	-.038	-.106	-.156	-.156		-.143	-.143	-.130				4
5	-.059	-.116	-.159	-.148		-.151	-.146	-.137				5
6	-.071	-.108	-.158	-.166		-.158	-.156	-.133				6
7	-.074	-.106	-.138	-.167		-.165	-.165	-.132				7
8	-.091	-.115	-.151	-.178		-.178	-.167	-.162				8
9	-.090	-.124	-.155	-.188		-.186	-.170	-.183				9
10	-.092	-.114		-.178		-.180	-.176	-.218				10
11	-.094	-.106		-.171		-.178						11
12	-.095	-.101		-.151		-.170	-.170	-.246				12
13	-.097	-.101	-.118	-.145		-.172	-.172	-.273				13
14	-.090	-.102	-.116	-.139		-.167	-.176	-.200				14
15	-.102	-.121	-.132	-.148		-.189	-.174	-.243				15
16	-.115	-.086	-.093	-.078		-.183	-.141	-.112				16
17	-.094	-.054	-.054	-.044								17
18	-.071	-.130	-.139	-.146		-.221	-.250	-.289				18
19	-.163	-.205	-.215	-.261	-.244	-.255	-.263	-.296				19
20	-.148	-.221	-.226	-.242	-.249	-.251	-.261	-.306				20
21	-.196	-.205	-.223	-.273	-.312	-.248	-.253	-.302				21
22	-.128	-.068	-.152	-.169	-.207	-.197	-.218	-.310				22

Table 13 Continued

Pressure coefficients on swept wing

Configuration 4 M=1.61 R=3.6 x 10^6

Orif	Station 1	2	3	4	24	5	6	7	8	9	10	Orif
					α= 6		δ= 5.0					
1	.894	.709	.627	.539		.767	.294	.901				1
2	.007	-.137	-.156	-.162		-.168	-.172	-.131				2
3	-.086	-.126	-.143	-.132		-.147	-.157	-.118				3
4	-.051	-.112	-.167	-.167		-.166	-.173	-.158				4
5	-.060	-.121	-.173	-.165		-.168	-.170	-.158				5
6	-.075	-.112	-.170	-.180		-.173	-.180	-.155				6
7	-.083	-.107	-.145	-.182		-.178	-.189	-.163				7
8	-.096	-.120	-.159	-.195		-.195	-.194	-.192				8
9	-.094	-.128	-.159	-.207		-.205	-.192	-.230				9
10	-.094	-.121		-.192		-.201	-.200	-.272				10
11	-.100	-.116		-.178		-.198						11
12	-.097	-.107		-.161		-.193	-.194	-.289				12
13	-.100	-.101	-.125	-.154		-.193	-.199	-.296				13
14	-.095	-.103	-.122	-.147		-.182	-.199	-.224				14
15	-.103	-.118	-.128	-.141		-.206	-.198	-.267				15
16	-.099	-.007	-.021	-.007		-.200	-.157	-.122				16
17	-.051	-.032	-.022	-.014								17
18	-.081	-.158	-.164	-.175		-.242	-.273	-.322				18
19	-.188	-.255	-.262	-.298	-.268	-.279	-.288	-.321				19
20	-.205	-.264	-.272	-.258	-.266	-.268	-.282	-.329				20
21	-.248	-.255	-.268	-.332	-.340	-.257	-.270	-.323				21
22	-.156	-.089	-.153	-.168	-.221	-.195	-.235	-.333				22
					α= 6		δ= 10.0					
1	.890	.703	.621	.537		.764	.296	.894				1
2	.002	-.147	-.158	-.164		-.175	-.174	-.133				2
3	-.089	-.137	-.149	-.134		-.150	-.155	-.123				3
4	-.051	-.117	-.169	-.168		-.172	-.174	-.164				4
5	-.064	-.128	-.176	-.172		-.177	-.174	-.161				5
6	-.076	-.118	-.172	-.182		-.180	-.180	-.160				6
7	-.087	-.116	-.146	-.185		-.188	-.192	-.162				7
8	-.098	-.125	-.164	-.193		-.198	-.195	-.193				8
9	-.097	-.138	-.164	-.210		-.207	-.194	-.231				9
10	-.097	-.126		-.196		-.205	-.205	-.283				10
11	-.104	-.121		-.182		-.201						11
12	-.106	-.114		-.167		-.199	-.194	-.300				12
13	-.105	-.109	-.130	-.158		-.197	-.201	-.300				13
14	-.097	-.107	-.118	-.152		-.188	-.201	-.225				14
15	-.106	.023	.021	-.029		-.210	-.200	-.271				15
16	-.063	.095	.074	.027		-.202	-.165	-.120				16
17	-.001	.027	.031	.029								17
18	-.124	-.218	-.221	-.206		-.242	-.274	-.330				18
19	-.227	-.312	-.317	-.340	-.287	-.281	-.292	-.325				19
20	-.270	-.328	-.323	-.306	-.305	-.269	-.289	-.336				20
21	-.307	-.320	-.324	-.394	-.339	-.257	-.278	-.327				21
22	-.248	-.150	-.182	-.202	-.244	-.162	-.239	-.333				22
					α= 6		δ= 20.0					
1	.890	.709	.618	.536		.763	.302	.895				1
2	.001	-.144	-.156	-.166		-.173	-.176	-.129				2
3	-.089	-.136	-.150	-.135		-.153	-.152	-.117				3
4	-.050	-.117	-.166	-.171		-.169	-.175	-.158				4
5	-.069	-.131	-.177	-.171		-.177	-.176	-.157				5
6	-.081	-.118	-.170	-.185		-.178	-.179	-.153				6
7	-.089	-.117	-.145	-.188		-.184	-.192	-.158				7
8	-.098	-.125	-.160	-.199		-.198	-.196	-.190				8
9	-.098	-.135	-.162	-.214		-.207	-.197	-.226				9
10	-.100	-.128		-.197		-.203	-.204	-.277				10
11	-.103	-.121		-.186		-.202						11
12	-.106	-.113		-.164		-.199	-.194	-.297				12
13	-.104	-.109	-.084	.011		-.196	-.195	-.302				13
14	-.100	-.005	.127	.059		-.168	-.196	-.226				14
15	-.064	.160	.132	.036		-.164	-.196	-.267				15
16	.082	.208	.143	-.040		-.152	-.156	-.120				16
17	.432	.174	.148	-.020								17
18	-.230	-.328	-.333	-.318		-.199	-.271	-.330				18
19	-.332	-.401	-.397	-.409	-.349	-.238	-.290	-.325				19
20	-.358	-.416	-.406	-.396	-.370	-.235	-.287	-.337				20
21	-.345	-.412	-.358	-.373	-.332	-.230	-.272	-.330				21
22	-.388	-.255	-.266	-.286	-.274	-.084	-.135	-.340				22

Table 13 Continued

Pressure coefficients on swept wing

Configuration 4 M= 1.61 R= 3.6 x 10^6

Orif	Station 1	2	3	4	24	5	6	7	8	9	10	Orif
					α= 6		δ= 30.0					
1	.890	.700	.620	.535		.760	.306	.888				1
2	-.001	-.146	-.162	-.165		-.169	-.168	-.128				2
3	-.090	-.138	-.149	-.131		-.150	-.153	-.112				3
4	-.052	-.115	-.171	-.173		-.166	-.168	-.159				4
5	-.064	-.131	-.178	-.171		-.169	-.167	-.153				5
6	-.081	-.118	-.173	-.184		-.178	-.177	-.152				6
7	-.088	-.117	-.150	-.187		-.183	-.186	-.153				7
8	-.104	-.126	-.164	-.197		-.194	-.194	-.184				8
9	-.101	-.135	-.165	-.210		-.204	-.189	-.217				9
10	-.099	-.127		-.198		-.197	-.198	-.269				10
11	-.105	-.121		-.029		-.146						11
12	-.107	-.114		.044		-.095	-.191	-.297				12
13	-.103	-.107	.133	.069		-.088	-.192	-.299				13
14	-.101	.137	.132	.059		-.092	-.193	-.224				14
15	.035	.180	.152	.035		-.123	-.187	-.258				15
16	.160	.298	.150	-.097		-.134	-.141	-.115				16
17	.571	.449	.117	-.148								17
18	-.207	-.393	-.406	-.402		-.189	-.263	-.323				18
19	-.410	-.451	-.442	-.396	-.383	-.217	-.278	-.322				19
20	-.405	-.459	-.418	-.370	-.358	-.222	-.264	-.337				20
21	-.399	-.445	-.366	-.349	-.333	-.223	-.246	-.330				21
22	-.421	-.318	-.325	-.345	-.297	-.071	-.055	-.340				22
					α= 9		δ= 0.0					
1	.938	.428	.434	.348		.745	.152	1.013				1
2	-.044	-.213	-.226	-.244		-.248	-.257	-.245				2
3	-.137	-.207	-.225	-.221		-.227	-.239	-.237				3
4	-.093	-.200	-.238	-.238		-.239	-.242	-.255				4
5	-.107	-.169	-.243	-.238		-.243	-.238	-.297				5
6	-.120	-.164	-.241	-.245		-.246	-.248	-.311				6
7	-.122	-.156	-.239	-.248		-.249	-.251	-.309				7
8	-.136	-.163	-.240	-.251		-.259	-.252	-.321				8
9	-.136	-.174	-.230	-.264		-.264	-.253	-.337				9
10	-.136	-.163		-.251		-.258	-.253	-.348				10
11	-.140	-.158		-.247		-.252						11
12	-.140	-.150		-.242		-.248	-.246	-.355				12
13	-.138	-.145	-.174	-.239		-.244	-.251	-.385				13
14	-.138	-.145	-.171	-.230		-.243	-.252	-.318				14
15	-.140	-.164	-.182	-.215		-.262	-.248	-.365				15
16	-.127	-.113	-.112	-.115		-.249	-.219	-.202				16
17	-.075	-.037	-.045	-.047								17
18	-.121	-.170	-.179	-.176		-.285	-.307	-.392				18
19	-.181	-.221	-.231	-.278	-.279	-.315	-.316	-.386				19
20	-.176	-.235	-.235	-.259	-.280	-.310	-.307	-.387				20
21	-.218	-.216	-.236	-.303	-.381	-.308	-.295	-.380				21
22	-.149	-.073	-.110	-.145	-.199	-.198	-.242	-.375				22
					α= 12		δ= -30.0					
1	.966	.247	.209	.175		.654	.000	.876				1
2	-.092	-.303	-.322	-.343		-.359	-.384	-.462				2
3	-.180	-.292	-.312	-.316		-.336	-.357	-.472				3
4	-.136	-.296	-.317	-.326		-.332	-.346	-.497				4
5	-.150	-.265	-.320	-.326		-.332	-.343	-.510				5
6	-.162	-.223	-.318	-.325		-.330	-.342	-.506				6
7	-.165	-.205	-.320	-.328		-.329	-.343	-.502				7
8	-.177	-.213	-.326	-.329		-.338	-.344	-.498				8
9	-.178	-.219	-.331	-.338		-.339	-.342	-.486				9
10	-.179	-.209		-.329		-.319	-.340	-.466				10
11	-.183	-.206		-.298		-.231						11
12	-.183	-.197		-.108		-.178	-.333	-.476				12
13	-.185	-.193	-.104	-.099		-.191	-.328	-.505				13
14	-.183	-.190	-.029	-.116		-.207	-.323	-.483				14
15	-.183	.050	-.013	-.117		-.228	-.313	-.491				15
16	-.121	.086	.018	-.247		-.240	-.289	-.246				16
17	1.615	1.081	1.001	.862								17
18	-.295	-.105	-.093	-.050		-.257	-.351	-.498				18
19	-.136	-.078	-.130	-.145	-.250	-.277	-.256	-.492				19
20	-.013	.107	-.006	-.238	-.382	-.290	-.195	-.476				20
21	.045	.192	.114	-.198	-.411	-.262	-.178	-.443				21
22	.074	.141	.118	-.212	-.353	-.211	-.170	-.422				22

Table13 Continued

Pressure coefficients on swept wing

Configuration 4 M= 1.61 R=3.6 x 10^6

Orif	Station 1	2	3	4	24	5	6	7	8	9	10	Orif
					α= 12		δ= -20.0					
1	.968	.244	.204	.171		.659	.003	.880				1
2	-.089	-.300	-.322	-.343		-.358	-.382	-.453				2
3	-.177	-.291	-.309	-.312		-.334	-.353	-.463				3
4	-.135	-.298	-.317	-.328		-.336	-.345	-.497				4
5	-.151	-.265	-.322	-.324		-.329	-.339	-.511				5
6	-.164	-.221	-.319	-.326		-.330	-.342	-.506				6
7	-.165	-.205	-.319	-.326		-.330	-.338	-.502				7
8	-.177	-.213	-.330	-.333		-.337	-.339	-.500				8
9	-.178	-.220	-.328	-.340		-.341	-.342	-.489				9
10	-.178	-.207		-.329		-.340	-.343	-.468				10
11	-.180	-.204		-.332		-.335						11
12	-.180	-.195		-.329		-.330	-.334	-.468				12
13	-.182	-.192	-.232	-.325		-.329	-.335	-.495				13
14	-.178	-.192	-.176	-.217		-.323	-.335	-.472				14
15	-.183	-.115	-.108	-.205		-.336	-.330	-.487				15
16	-.215	-.051	-.082	-.173		-.334	-.306	-.244				16
17	1.027	.681	.700	.566								17
18	-.242	-.180	-.172	-.158		-.355	-.371	-.498				18
19	-.175	-.080	-.115	-.207	-.263	-.375	-.386	-.494				19
20	-.101	-.020	-.051	-.249	-.304	-.356	-.377	-.489				20
21	-.082	.010	-.018	-.229	-.360	-.329	-.319	-.480				21
22	-.081	-.003	-.027	-.197	-.309	-.218	-.210	-.436				22
					α= 12		δ= -10.0					
1	.970	.243	.203	.167		.654	.008	.880				1
2	-.093	-.301	-.320	-.347		-.360	-.382	-.446				2
3	-.176	-.293	-.309	-.318		-.339	-.349	-.462				3
4	-.134	-.298	-.317	-.328		-.332	-.343	-.495				4
5	-.149	-.266	-.318	-.328		-.332	-.339	-.510				5
6	-.162	-.221	-.315	-.327		-.331	-.340	-.504				6
7	-.165	-.209	-.319	-.330		-.328	-.337	-.502				7
8	-.177	-.214	-.326	-.330		-.334	-.341	-.500				8
9	-.178	-.219	-.330	-.340		-.339	-.338	-.485				9
10	-.182	-.212		-.330		-.334	-.338	-.467				10
11	-.181	-.206		-.332		-.332						11
12	-.180	-.200		-.324		-.326	-.335	-.465				12
13	-.182	-.195	-.235	-.323		-.324	-.333	-.491				13
14	-.181	-.190	-.224	-.320		-.317	-.330	-.468				14
15	-.182	-.210	-.235	-.326		-.332	-.324	-.484				15
16	-.215	-.202	-.206	-.216		-.331	-.300	-.244				16
17	.360	.287	-.036	-.266								17
18	-.218	-.181	-.190	-.244		-.352	-.372	-.495				18
19	-.208	-.170	-.188	-.320	-.339	-.389	-.378	-.493				19
20	-.160	-.160	-.180	-.281	-.284	-.387	-.369	-.488				20
21	-.167	-.158	-.171	-.260	-.386	-.383	-.361	-.478				21
22	-.100	-.043	-.103	-.178	-.251	-.228	-.226	-.432				22
					α= 12		δ= - 5.0					
1	.970	.245	.207	.165		.661	.008	.878				1
2	-.094	-.301	-.322	-.346		-.357	-.380	-.449				2
3	-.180	-.292	-.310	-.314		-.335	-.349	-.458				3
4	-.136	-.299	-.314	-.325		-.334	-.342	-.493				4
5	-.148	-.264	-.319	-.327		-.329	-.339	-.506				5
6	-.164	-.218	-.318	-.327		-.328	-.338	-.505				6
7	-.168	-.205	-.319	-.327		-.331	-.338	-.502				7
8	-.178	-.212	-.328	-.335		-.335	-.337	-.496				8
9	-.178	-.222	-.333	-.341		-.335	-.338	-.491				9
10	-.181	-.207		-.323		-.327	-.336	-.464				10
11	-.183	-.203		-.323		-.326						11
12	-.183	-.196		-.321		-.320	-.333	-.467				12
13	-.184	-.189	-.235	-.317		-.321	-.330	-.487				13
14	-.180	-.185	-.221	-.308		-.314	-.327	-.464				14
15	-.179	-.204	-.226	-.306		-.329	-.325	-.479				15
16	-.179	-.168	-.176	-.207		-.326	-.295	-.237				16
17	-.192	-.173	-.234	-.219								17
18	-.201	-.203	-.215	-.287		-.351	-.368	-.489				18
19	-.221	-.234	-.255	-.374	-.369	-.379	-.377	-.490				19
20	-.198	-.236	-.259	-.314	-.320	-.380	-.359	-.483				20
21	-.223	-.235	-.246	-.304	-.402	-.372	-.346	-.472				21
22	-.135	-.070	-.110	-.168	-.223	-.227	-.223	-.420				22

Table 13 Continued

Pressure coefficients on swept wing

Configuration 4 M=1.61 R=3.6 x 10^6

Orif	Station 1	2	3	4	24	5	6	7	8	9	10	Orif
					α= 12		δ= 0.0					
1	.973	.235	.197	.166		.650	.000	.870				1
2	-.090	-.299	-.320	-.336		-.348	-.371	-.414				2
3	-.178	-.291	-.306	-.309		-.327	-.345	-.416				3
4	-.135	-.292	-.315	-.323		-.327	-.338	-.425				4
5	-.150	-.264	-.319	-.317		-.328	-.335	-.454				5
6	-.163	-.226	-.317	-.322		-.328	-.335	-.454				6
7	-.166	-.213	-.319	-.318		-.325	-.335	-.455				7
8	-.178	-.210	-.326	-.326		-.336	-.335	-.455				8
9	-.177	-.220	-.325	-.333		-.337	-.332	-.452				9
10	-.178	-.207		-.324		-.335	-.332	-.437				10
11	-.182	-.205		-.324		-.334						11
12	-.184	-.197		-.323		-.325	-.326	-.444				12
13	-.184	-.192	-.236	-.320		-.325	-.329	-.470				13
14	-.178	-.190	-.226	-.319		-.320	-.325	-.432				14
15	-.184	-.208	-.221	-.315		-.334	-.323	-.456				15
16	-.147	-.137	-.147	-.192		-.327	-.295	-.244				16
17	-.063	-.033	-.049	-.050								17
18	-.169	-.212	-.236	-.285		-.349	-.370	-.464				18
19	-.221	-.276	-.292	-.398	-.362	-.381	-.374	-.462				19
20	-.233	-.287	-.302	-.349	-.351	-.387	-.368	-.461				20
21	-.268	-.275	-.296	-.363	-.416	-.383	-.363	-.450				21
22	-.182	-.091	-.127	-.164	-.220	-.237	-.237	-.418				22
					α= 12		δ= 5.0					
1	.972	.228	.192	.163		.648	-.005	.874				1
2	-.093	-.306	-.322	-.346		-.358	-.385	-.438				2
3	-.181	-.294	-.314	-.316		-.335	-.357	-.448				3
4	-.137	-.303	-.318	-.326		-.335	-.347	-.461				4
5	-.150	-.274	-.319	-.324		-.333	-.345	-.479				5
6	-.163	-.226	-.319	-.326		-.332	-.346	-.479				6
7	-.166	-.209	-.320	-.327		-.329	-.344	-.473				7
8	-.177	-.217	-.329	-.331		-.339	-.341	-.474				8
9	-.177	-.223	-.328	-.337		-.344	-.342	-.466				9
10	-.178	-.211		-.333		-.343	-.342	-.456				10
11	-.180	-.208		-.332		-.339						11
12	-.182	-.199		-.327		-.333	-.337	-.458				12
13	-.182	-.195	-.237	-.325		-.331	-.334	-.478				13
14	-.181	-.192	-.228	-.327		-.323	-.336	-.449				14
15	-.185	-.185	-.146	-.260		-.337	-.332	-.465				15
16	-.123	-.056	-.095	-.172		-.335	-.304	-.241				16
17	-.040	-.021	-.023	-.038								17
18	-.114	-.243	-.264	-.303		-.358	-.378	-.474				18
19	-.236	-.320	-.327	-.422	-.374	-.392	-.383	-.472				19
20	-.267	-.326	-.338	-.364	-.367	-.391	-.374	-.470				20
21	-.318	-.316	-.335	-.338	-.415	-.392	-.371	-.461				21
22	-.196	-.145	-.180	-.159	-.282	-.237	-.232	-.432				22
					α= 12		δ= 10.0					
1	.971	.229	.193	.161		.649	-.001	.876				1
2	-.093	-.306	-.326	-.348		-.362	-.379	-.449				2
3	-.179	-.293	-.311	-.319		-.340	-.352	-.457				3
4	-.137	-.302	-.318	-.326		-.338	-.345	-.472				4
5	-.149	-.270	-.320	-.327		-.336	-.340	-.485				5
6	-.163	-.224	-.317	-.331		-.336	-.342	-.488				6
7	-.168	-.212	-.321	-.331		-.334	-.340	-.483				7
8	-.178	-.213	-.329	-.333		-.335	-.341	-.484				8
9	-.178	-.217	-.332	-.341		-.340	-.341	-.475				9
10	-.180	-.211		-.334		-.338	-.341	-.454				10
11	-.183	-.202		-.335		-.334						11
12	-.184	-.198		-.331		-.329	-.335	-.463				12
13	-.185	-.191	-.238	-.329		-.327	-.333	-.484				13
14	-.183	-.192	-.166	-.320		-.320	-.333	-.456				14
15	-.181	-.034	-.079	-.178		-.335	-.328	-.474				15
16	-.058	.013	-.057	-.150		-.328	-.300	-.243				16
17	-.032	-.001	-.090	-.054								17
18	-.130	-.291	-.305	-.358		-.356	-.374	-.484				18
19	-.273	-.361	-.375	-.438	-.395	-.385	-.381	-.481				19
20	-.318	-.373	-.379	-.368	-.375	-.392	-.377	-.479				20
21	-.359	-.366	-.365	-.303	-.399	-.390	-.366	-.468				21
22	-.278	-.202	-.235	-.207	-.334	-.225	-.212	-.426				22

Table 13 Concluded

Pressure coefficients on swept wing

Configuration 4 M= 1.61 R= 3.6 x 10^6

Orif	Station 1	2	3	4	24	5	6	7	8	9	10	Orif
					α= 12		δ= 20.0					
1	.972	.246	.207	.175		.662	.008	.883				1
2	-.093	-.301	-.323	-.346		-.361	-.380	-.450				2
3	-.182	-.293	-.312	-.318		-.333	-.351	-.461				3
4	-.136	-.300	-.317	-.326		-.335	-.345	-.482				4
5	-.148	-.267	-.320	-.324		-.330	-.340	-.498				5
6	-.162	-.224	-.318	-.326		-.331	-.337	-.495				6
7	-.166	-.207	-.323	-.331		-.330	-.337	-.492				7
8	-.179	-.217	-.331	-.333		-.337	-.339	-.490				8
9	-.177	-.221	-.333	-.338		-.339	-.339	-.485				9
10	-.178	-.210		-.331		-.340	-.340	-.465				10
11	-.183	-.206		-.330		-.337						11
12	-.183	-.200		-.263		-.330	-.334	-.464				12
13	-.182	-.194	-.110	-.163		-.330	-.330	-.483				13
14	-.179	.009	-.055	-.138		-.314	-.331	-.462				14
15	-.084	.048	-.049	-.154		-.309	-.326	-.473				15
16	.058	.078	-.029	-.204		-.294	-.284	-.239				16
17	.213	.055	-.107	-.290								17
18	-.230	-.377	-.378	-.422		-.334	-.372	-.489				18
19	-.361	-.430	-.434	-.374	-.415	-.369	-.382	-.488				19
20	-.377	-.437	-.379	-.328	-.336	-.370	-.377	-.480				20
21	-.371	-.418	-.328	-.306	-.365	-.303	-.284	-.470				21
22	-.397	-.278	-.306	-.278	-.330	-.208	-.190	-.410				22
					α= 12		δ= 30.0					
1	.973	.246	.217	.179		.664	.017	.887				1
2	-.087	-.299	-.322	-.339		-.356	-.377	-.446				2
3	-.174	-.290	-.312	-.311		-.333	-.345	-.454				3
4	-.135	-.299	-.315	-.323		-.333	-.342	-.488				4
5	-.145	-.262	-.319	-.321		-.332	-.337	-.503				5
6	-.164	-.221	-.318	-.321		-.329	-.335	-.498				6
7	-.164	-.207	-.318	-.324		-.328	-.335	-.496				7
8	-.177	-.213	-.326	-.327		-.335	-.339	-.492				8
9	-.176	-.219	-.329	-.338		-.321	-.338	-.484				9
10	-.174	-.207		-.208		-.248	-.337	-.462				10
11	-.178	-.207		-.138		-.246						11
12	-.179	-.196		-.110		-.230	-.332	-.470				12
13	-.182	.015	-.056	-.130		-.243	-.329	-.499				13
14	-.099	.070	-.041	-.153		-.258	-.327	-.470				14
15	.108	.097	.021	-.146		-.273	-.299	-.477				15
16	.140	.121	-.028	-.234		-.285	-.256	-.240				16
17	.315	.052	-.194	-.385								17
18	-.267	-.422	-.399	-.392		-.317	-.360	-.490				18
19	-.406	-.463	-.386	-.340	-.406	-.338	-.368	-.489				19
20	-.419	-.444	-.346	-.325	-.332	-.347	-.304	-.482				20
21	-.405	-.408	-.337	-.329	-.362	-.260	-.206	-.469				21
22	-.410	-.323	-.325	-.321	-.320	-.197	-.169	-.413				22
					α= 15		δ= 0.0					
1	1.003	.098	-.035	-.054		.421	-.172	.691				1
2	-.125	-.348	-.367	-.398		-.402	-.421	-.477				2
3	-.205	-.336	-.358	-.370		-.385	-.400	-.481				3
4	-.169	-.335	-.363	-.368		-.378	-.389	-.505				4
5	-.184	-.326	-.363	-.368		-.376	-.386	-.514				5
6	-.192	-.288	-.357	-.369		-.372	-.386	-.511				6
7	-.198	-.249	-.355	-.364		-.370	-.384	-.507				7
8	-.207	-.243	-.360	-.368		-.381	-.380	-.497				8
9	-.209	-.244	-.365	-.372		-.382	-.378	-.493				9
10	-.213	-.235		-.363		-.367	-.376	-.475				10
11	-.213	-.232		-.348		-.342						11
12	-.213	-.227		-.327		-.339	-.374	-.486				12
13	-.212	-.224	-.269	-.329		-.335	-.366	-.517				13
14	-.209	-.221	-.261	-.320		-.340	-.366	-.488				14
15	-.212	-.220	-.221	-.316		-.350	-.353	-.495				15
16	-.163	-.150	-.192	-.249		-.339	-.333	-.255				16
17	.005	.036	.004	-.005								17
18	-.210	-.221	-.269	-.284		-.365	-.387	-.502				18
19	-.229	-.268	-.292	-.348	-.356	-.377	-.355	-.496				19
20	-.221	-.262	-.279	-.294	-.338	-.368	-.309	-.484				20
21	-.255	-.235	-.264	-.234	-.363	-.296	-.264	-.461				21
22	-.175	-.075	-.150	-.178	-.269	-.256	-.243	-.439				22

Table 14

Pressure coefficients on swept wing

Configuration 5 M= 1.61 R= 3.6 x 10^6

Orif	Station 1	2	3	4	24	5	6	7	8	9	10	Orif
					α= -15		δ= 0.0					
1	.598	.664	.617	.459		-.168	.399	-.220				1
2	.473	.598	.659	.671		.700	.727	.536				2
3	.468	.529	.604	.636		.641	.690	.434				3
4	.451	.480	.554	.577		.596	.639	.326				4
5	.427	.469	.506	.543		.556	.619	.245				5
6	.410	.461	.476	.505		.536	.598	.213				6
7	.418	.431	.453	.485		.512	.586	.193				7
8	.443	.418	.417	.465		.500	.590	.177				8
9	.435	.395	.430	.454		.505	.584	.138				9
10	.413	.411		.454		.508	.561	.119				10
11	.417	.415		.463		.517						11
12	.422	.419		.471		.508	.524	.030				12
13	.410	.418	.435	.452		.493	.488	.012				13
14	.412	.398	.402	.416		.462	.434	-.145				14
15	.414	.331	.334	.345		.364	.321	-.151				15
16	.296	-.001	.103	.002		.299	.308	.000				16
17	-.028	.004	-.060	-.073								17
18	.311	.295	.386	.211		.255	.197	-.112				18
19	.271	.248	.244	.247	.240	.185	.161	-.122				19
20	.352	.253	.236	.270	.279	.209	.154	-.116				20
21	.248	.277	.270	.265	.196	.263	.163	-.106				21
22	.280	.286	.302	.272	.259	.284	.212	-.085				22
					α= -12		δ= -30.0					
1	.734	.704	.711	.621		.127	.649	.192				1
2	.445	.489	.515	.521		.560	.575	.331				2
3	.356	.402	.434	.466		.470	.523	.272				3
4	.348	.345	.397	.421		.445	.459	.175				4
5	.327	.326	.349	.382		.406	.423	.119				5
6	.300	.305	.329	.348		.369	.400	.090				6
7	.292	.288	.299	.317		.345	.366	.072				7
8	.281	.260	.264	.285		.321	.368	.066				8
9	.282	.246	.258	.284		.325	.369	.052				9
10	.262	.256		.309		.334	.361	.066				10
11	.268	.266		.313		.336						11
12	.272	.270		.321		.338	.421	.040				12
13	.263	.277	.311	.313		.351	.478	.025				13
14	.264	.272	.290	.299		.449	.473	-.137				14
15	.268	.245	.327	.460		.481	.414	-.141				15
16	.249	.355	.375	.515		.471	.378	.014				16
17	.225	1.099	.117	-.359								17
18	.123	.231	.156	.213		.454	.274	-.095				18
19	.246	.453	.382	.844	.581	.454	.317	-.065				19
20	.389	.526	.667	1.145	.482	.426	.318	-.035				20
21	.642	.729	1.028	.728	-.222	.381	.301	-.016				21
22	.683	.644	.762	.408	-.294	.266	.259	-.014				22
					α= -12		δ= -20.0					
1	.735	.703	.712	.621		.127	.641	.184				1
2	.446	.488	.519	.519		.564	.574	.328				2
3	.355	.407	.440	.468		.471	.520	.274				3
4	.347	.349	.400	.426		.447	.458	.176				4
5	.324	.327	.350	.384		.409	.424	.117				5
6	.300	.308	.331	.349		.372	.401	.085				6
7	.291	.289	.300	.317		.349	.364	.066				7
8	.284	.256	.262	.287		.320	.368	.059				8
9	.280	.246	.263	.287		.328	.370	.043				9
10	.260	.255		.310		.332	.365	.029				10
11	.268	.266		.314		.335						11
12	.275	.272		.322		.339	.368	-.027				12
13	.267	.277	.312	.313		.338	.355	-.041				13
14	.267	.276	.284	.296		.325	.331	-.163				14
15	.265	.241	.253	.315		.276	.270	-.187				15
16	.209	.375	.275	.428		.280	.272	-.040				16
17	.605	.831	-.007	-.357								17
18	.091	.237	.233	.365		.223	.124	-.144				18
19	.199	.318	.307	.505	.407	.309	.117	-.163				19
20	.397	.428	.514	.626	.349	.325	.239	-.131				20
21	.549	.561	.784	.419	-.102	.322	.291	-.050				21
22	.489	.483	.610	.285	-.234	.283	.259	-.016				22

Table 14 Continued

Pressure coefficients on swept wing

Configuration 5 M=1.61 R=3.6 x 10^6

Orif	Station 1	2	3	4	24	5	6	7	8	9	10	Orif
					α=-12		δ= -10.0					
1	.735	.699	.711	.622		.126	.642	.181				1
2	.443	.488	.519	.524		.565	.573	.331				2
3	.356	.402	.442	.468		.477	.522	.275				3
4	.349	.349	.399	.430		.454	.461	.178				4
5	.322	.327	.353	.388		.415	.428	.121				5
6	.299	.308	.333	.350		.377	.403	.090				6
7	.291	.288	.299	.321		.352	.367	.070				7
8	.284	.261	.259	.290		.324	.368	.061				8
9	.281	.244	.264	.288		.328	.372	.049				9
10	.255	.255		.312		.339	.367	.032				10
11	.265	.265		.319		.339						11
12	.272	.270		.325		.342	.372	-.027				12
13	.261	.276	.312	.317		.343	.355	-.039				13
14	.263	.276	.285	.299		.322	.329	-.160				14
15	.265	.231	.231	.247		.241	.240	-.186				15
16	.195	.100	.096	.166		.198	.226	-.038				16
17	.003	.065	-.036	-.182								17
18	.043	.070	.098	.136		.153	.109	-.144				18
19	.201	.142	.156	.177	.162	.082	.079	-.167				19
20	.315	.323	.342	.357	.262	.083	.061	-.173				20
21	.327	.392	.443	.280	.142	.151	.049	-.161				21
22	.265	.327	.379	.170	-.024	.194	.057	-.136				22
					α=-12		δ= - 5.0					
1	.736	.697	.710	.620		.126	.640	.182				1
2	.444	.486	.517	.519		.565	.577	.337				2
3	.354	.401	.439	.466		.473	.524	.279				3
4	.349	.349	.398	.425		.453	.465	.181				4
5	.326	.326	.350	.385		.411	.428	.121				5
6	.299	.306	.331	.350		.375	.407	.093				6
7	.292	.287	.301	.319		.355	.368	.075				7
8	.282	.260	.261	.291		.323	.375	.067				8
9	.278	.247	.262	.286		.329	.373	.049				9
10	.257	.255		.313		.336	.370	.036				10
11	.265	.263		.317		.340						11
12	.270	.270		.327		.343	.374	-.022				12
13	.264	.277	.315	.319		.343	.357	-.040				13
14	.264	.274	.287	.300		.323	.334	-.162				14
15	.262	.232	.233	.248		.243	.236	-.186				15
16	.186	.010	.050	.024		.185	.217	-.041				16
17	.033	.075	-.006	-.011								17
18	.044	-.013	-.022	.010		.152	.114	-.144				18
19	.176	.173	.201	.163	.139	.081	.084	-.167				19
20	.253	.209	.240	.215	.223	.064	.063	-.171				20
21	.197	.204	.265	.168	.137	.065	.052	-.160				21
22	.186	.182	.227	.118	.012	.136	.056	-.135				22
					α=-12		δ= 0.0					
1	.731	.699	.709	.622		.126	.638	.179				1
2	.445	.490	.516	.520		.565	.576	.330				2
3	.355	.405	.438	.472		.475	.522	.275				3
4	.346	.347	.397	.425		.449	.462	.177				4
5	.323	.327	.354	.382		.411	.425	.116				5
6	.301	.307	.329	.350		.375	.402	.084				6
7	.290	.288	.302	.321		.349	.367	.066				7
8	.284	.264	.264	.291		.325	.369	.060				8
9	.279	.247	.264	.286		.329	.371	.042				9
10	.259	.255		.308		.336	.365	.027				10
11	.268	.269		.313		.339						11
12	.271	.272		.325		.342	.371	-.030				12
13	.266	.275	.313	.314		.343	.356	-.042				13
14	.262	.273	.287	.299		.326	.331	-.161				14
15	.260	.229	.233	.242		.240	.233	-.191				15
16	.181	-.052	.038	-.037		.188	.208	-.043				16
17	-.103	-.054	-.075	-.075								17
18	.182	.249	.296	.108		.155	.111	-.147				18
19	.152	.117	.118	.106	.092	.080	.077	-.173				19
20	.233	.096	.103	.099	.104	.066	.062	-.175				20
21	.131	.127	.112	.076	.023	.071	.047	-.166				21
22	.143	.127	.113	.108	.092	.099	.047	-.141				22

Table14 Continued

Pressure coefficients on swept wing

Configuration 5 M= 1.61 R=3.6 x 10^6

Orif	Station 1	2	3	4	24	5	6	7	8	9	10	Orif
					α= -12		δ= 5.0					
1	.735	.698	.710	.620		.121	.634	.173				1
2	.444	.488	.519	.525		.562	.576	.332				2
3	.356	.402	.438	.464		.474	.523	.274				3
4	.349	.345	.395	.423		.447	.459	.177				4
5	.325	.325	.349	.384		.407	.429	.122				5
6	.301	.304	.332	.351		.371	.403	.089				6
7	.293	.286	.303	.317		.349	.372	.070				7
8	.285	.259	.264	.289		.325	.373	.065				8
9	.281	.246	.268	.288		.330	.375	.053				9
10	.260	.254		.311		.338	.373	.045				10
11	.269	.264		.313		.343						11
12	.272	.270		.324		.351	.408	-.007				12
13	.263	.273	.313	.327		.384	.407	-.028				13
14	.264	.287	.354	.383		.405	.372	-.157				14
15	.263	.463	.458	.464		.324	.267	-.184				15
16	.245	.512	.486	.498		.276	.228	-.036				16
17	.142	.134	-.100	-.133								17
18	.109	.084	.108	-.095		.202	.144	-.140				18
19	.097	-.048	-.046	-.008	-.006	.118	.101	-.162				19
20	.147	-.055	-.059	-.005	.005	.090	.081	-.164				20
21	.042	.020	-.051	-.014	-.051	.077	.068	-.153				21
22	-.013	.050	-.041	-.048	-.027	.068	.071	-.124				22
					α= -12		δ= 10.0					
1	.734	.700	.709	.622		.122	.637	.174				1
2	.444	.488	.512	.522		.565	.577	.336				2
3	.354	.402	.438	.470		.474	.524	.304				3
4	.346	.346	.393	.427		.454	.459	.220				4
5	.323	.325	.351	.389		.412	.428	.166				5
6	.299	.305	.331	.349		.376	.406	.137				6
7	.290	.290	.300	.319		.354	.390	.121				7
8	.284	.259	.264	.289		.326	.484	.110				8
9	.281	.245	.267	.287		.340	.502	.080				9
10	.259	.257		.311		.439	.486	.063				10
11	.266	.266		.355		.503						11
12	.271	.269		.502		.508	.447	-.007				12
13	.264	.299	.508	.568		.481	.418	-.025				13
14	.266	.546	.608	.607		.429	.372	-.160				14
15	.498	.629	.649	.607		.317	.262	-.180				15
16	.556	.645	.658	.538		.270	.226	-.030				16
17	.649	.509	.598	.561								17
18	.022	-.066	-.081	-.231		.191	.140	-.139				18
19	.018	-.171	-.192	-.177	-.084	.104	.096	-.153				19
20	.035	-.171	-.189	-.176	-.105	.072	.076	-.148				20
21	-.058	-.120	-.182	-.150	-.165	.048	.066	-.138				21
22	-.059	-.030	-.167	-.186	-.142	.030	.080	-.111				22
					α= -12		δ= 20.0					
1	.735	.701	.709	.622		.122	.635	.039				1
2	.446	.487	.518	.518		.565	.576	.412				2
3	.357	.403	.443	.467		.473	.526	.355				3
4	.347	.346	.401	.426		.450	.561	.253				4
5	.322	.325	.354	.386		.409	.585	.180				5
6	.299	.306	.333	.351		.375	.575	.153				6
7	.290	.290	.303	.320		.369	.553	.133				7
8	.284	.263	.263	.292		.520	.547	.116				8
9	.281	.249	.268	.302		.573	.535	.085				9
10	.261	.257		.520		.586	.500	.064				10
11	.269	.266		.607		.580						11
12	.272	.278		.656		.554	.448	-.006				12
13	.277	.585	.668	.680		.507	.414	-.018				13
14	.322	.674	.703	.691		.431	.360	-.156				14
15	.619	.693	.715	.657		.313	.262	-.167				15
16	.580	.667	.654	.443		.266	.235	-.020				16
17	1.615	1.280	1.175	.969								17
18	-.144	-.250	-.299	-.358		.174	.137	-.130				18
19	-.144	-.307	-.347	-.349	-.135	.080	.099	-.147				19
20	-.169	-.302	-.341	-.355	-.194	.041	.086	-.143				20
21	-.187	-.270	-.334	-.335	-.321	.013	.083	-.134				21
22	-.193	-.117	-.320	-.308	-.263	-.009	.085	-.118				22

Table 14 Continued

Pressure coefficients on swept wing

Configuration 5 M=1.61 R=3.6 x 10^6

Orif	Station 1	2	3	4	24	5	6	7	8	9	10	Orif
					α=-12		δ= 30.0					
1	.732	.700	.707	.618		.120	.635	.007				1
2	.444	.484	.518	.520		.565	.578	.429				2
3	.353	.403	.438	.470		.475	.533	.365				3
4	.344	.348	.397	.428		.456	.600	.264				4
5	.322	.325	.352	.389		.413	.609	.187				5
6	.298	.306	.331	.353		.375	.593	.163				6
7	.286	.288	.299	.322		.370	.569	.138				7
8	.283	.259	.264	.293		.545	.562	.124				8
9	.278	.246	.262	.295		.601	.549	.094				9
10	.257	.256		.522		.616	.510	.075				10
11	.265	.264		.626		.614						11
12	.271	.272		.674		.582	.457	.004				12
13	.262	.474	.671	.704		.532	.415	-.011				13
14	.266	.666	.717	.718		.449	.370	-.153				14
15	.561	.732	.727	.695		.328	.274	-.163				15
16	.462	.477	.545	.386		.284	.251	-.016				16
17	1.342	1.063	1.000	.793								17
18	-.052	-.380	-.401	-.340		.175	.143	-.128				18
19	-.289	-.399	-.389	-.337	-.261	.079	.109	-.143				19
20	-.284	-.398	-.394	-.346	-.187	.032	.095	-.144				20
21	-.337	-.382	-.385	-.342	-.347	.002	.087	-.136				21
22	-.319	-.255	-.343	-.329	-.280	-.023	.082	-.120				22
					α= -9		δ= 0.0					
1	.792	.712	.738	.685		.331	.720	.449				1
2	.517	.407	.443	.460		.482	.502	.284				2
3	.284	.326	.353	.377		.381	.437	.196				3
4	.273	.274	.315	.343		.372	.373	.106				4
5	.248	.253	.276	.311		.335	.345	.043				5
6	.228	.238	.259	.280		.304	.314	.019				6
7	.220	.222	.241	.254		.278	.270	-.006				7
8	.213	.193	.196	.218		.230	.255	-.011				8
9	.212	.181	.190	.203		.223	.255	-.023				9
10	.191	.189		.219		.232	.251	-.039				10
11	.201	.194		.222		.237						11
12	.205	.202		.230		.242	.264	-.064				12
13	.199	.205	.222	.227		.241	.256	-.081				13
14	.195	.196	.212	.215		.236	.248	-.156				14
15	.188	.156	.166	.174		.167	.173	-.208				15
16	.122	-.061	-.007	-.030		.113	.151	-.065				16
17	-.083	.001	-.058	-.056								17
18	.107	.151	.201	.051		.095	.058	-.160				18
19	.083	.058	.052	.043	.037	.024	.022	-.187				19
20	.159	.046	.036	.044	.043	.012	.006	-.186				20
21	.066	.082	.044	.014	-.029	.003	-.009	-.182				21
22	.079	.085	.045	.041	.014	.024	-.004	-.166				22
					α=- 6		δ= -30.0					
1	.815	.714	.748	.725		.540	.743	.710				1
2	.254	.328	.360	.384		.388	.395	.211				2
3	.208	.226	.255	.272		.256	.326	.109				3
4	.203	.197	.221	.237		.270	.281	.047				4
5	.182	.172	.189	.219		.238	.253	-.003				5
6	.162	.158	.171	.193		.219	.226	-.016				6
7	.155	.152	.164	.178		.193	.192	-.035				7
8	.143	.128	.126	.147		.153	.170	-.048				8
9	.147	.110	.115	.123		.139	.165	-.060				9
10	.128	.117		.132		.140	.153	-.076				10
11	.132	.128		.136		.142						11
12	.138	.134		.142		.155	.165	-.068				12
13	.134	.139	.144	.224		.259	.193	-.096				13
14	.135	.132	.153	.437		.323	.243	-.104				14
15	.130	.117	.436	.486		.295	.232	-.190				15
16	.177	.274	.476	.479		.286	.240	-.041				16
17	.611	1.026	1.178	.050								17
18	.006	.182	.383	.267		.236	.067	-.136				18
19	.191	.138	.276	.613	.268	.232	.064	-.151				19
20	.324	.706	.542	.635	.209	.204	.099	-.144				20
21	.375	.676	.662	.264	-.224	.169	.105	-.138				21
22	.535	.486	.547	.161	-.314	.084	.095	-.101				22

Table 14 Continued

Pressure coefficients on swept wing

Configuration 5 M = 1.61 R = 3.6 x 10^6

Orif	Station 1	2	3	4	24	5	6	7	8	9	10	Orif
					α = − 6		δ = −20.0					
1	.813	.712	.744	.722		.535	.745	.707				1
2	.250	.331	.357	.381		.392	.401	.212				2
3	.211	.228	.255	.270		.259	.330	.110				3
4	.204	.196	.220	.234		.269	.280	.053				4
5	.182	.172	.189	.214		.237	.256	.004				5
6	.163	.158	.177	.193		.220	.226	−.012				6
7	.153	.151	.162	.173		.196	.200	−.032				7
8	.146	.124	.123	.144		.153	.173	−.051				8
9	.147	.109	.113	.120		.138	.167	−.059				9
10	.127	.119		.130		.138	.153	−.075				10
11	.134	.126		.136		.141						11
12	.139	.131		.144		.150	.167	−.069				12
13	.132	.136	.143	.145		.156	.160	−.096				13
14	.131	.131	.144	.145		.156	.163	−.106				14
15	.117	.119	.209	.181		.109	.134	−.204				15
16	.086	.325	.264	.370		.122	.157	−.065				16
17	.934	1.044	.364	−.124								17
18	−.055	.152	.250	.333		.047	−.002	−.151				18
19	.138	.182	.274	.345	.235	.069	−.027	−.179				19
20	.241	.321	.323	.360	.174	.123	−.036	−.173				20
21	.325	.375	.374	.187	−.186	.126	−.039	−.164				21
22	.332	.310	.316	.104	−.273	.096	.024	−.147				22
					α = − 6		δ = −10.0					
1	.819	.715	.746	.720		.531	.746	.705				1
2	.251	.329	.360	.381		.388	.400	.214				2
3	.208	.231	.254	.270		.261	.331	.109				3
4	.203	.198	.220	.237		.269	.288	.050				4
5	.185	.173	.191	.218		.240	.255	−.001				5
6	.164	.158	.175	.192		.223	.232	−.019				6
7	.155	.149	.166	.175		.195	.201	−.036				7
8	.146	.125	.124	.147		.157	.175	−.049				8
9	.144	.111	.113	.124		.142	.168	−.061				9
10	.131	.119		.130		.144	.158	−.077				10
11	.132	.129		.136		.146						11
12	.141	.132		.144		.152	.169	−.067				12
13	.131	.138	.142	.145		.157	.163	−.096				13
14	.132	.130	.138	.138		.154	.161	−.113				14
15	.121	.093	.100	.109		.104	.119	−.211				15
16	.072	.022	.042	.117		.072	.110	−.071				16
17	−.107	.027	.051	.090								17
18	−.021	.022	.066	.098		.036	.005	−.157				18
19	.061	.050	.074	.059	.059	−.025	−.029	−.186				19
20	.138	.143	.143	.138	.078	−.032	−.040	−.181				20
21	.154	.190	.197	.080	.005	−.015	−.052	−.176				21
22	.122	.156	.169	.020	−.095	.022	−.055	−.161				22
					α = − 6		δ = − 5.0					
1	.816	.712	.747	.726		.531	.744	.702				1
2	.250	.331	.362	.386		.390	.401	.214				2
3	.209	.230	.255	.270		.259	.327	.111				3
4	.204	.198	.218	.241		.272	.283	.055				4
5	.183	.178	.192	.222		.241	.255	−.002				5
6	.164	.161	.178	.204		.224	.228	−.014				6
7	.156	.154	.162	.182		.198	.203	−.031				7
8	.147	.126	.126	.150		.156	.178	−.047				8
9	.149	.109	.115	.124		.143	.169	−.059				9
10	.132	.121		.132		.143	.160	−.071				10
11	.133	.130		.138		.147						11
12	.139	.138		.149		.154	.168	−.067				12
13	.132	.139	.147	.149		.160	.163	−.093				13
14	.134	.134	.142	.139		.157	.160	−.113				14
15	.124	.097	.102	.113		.103	.114	−.207				15
16	.068	−.023	−.017	.020		.064	.102	−.068				16
17	−.021	.036	−.022	.008								17
18	−.051	−.042	−.004	−.011		.033	.004	−.155				18
19	.038	.016	.040	−.007	−.004	−.028	−.025	−.185				19
20	.100	.052	.078	.057	.057	−.036	−.039	−.181				20
21	.056	.051	.098	.022	−.010	−.037	−.050	−.177				21
22	.048	.051	.078	−.014	−.083	−.023	−.052	−.160				22

Table 14 Continued

Pressure coefficients on swept wing

Configuration 5 M= 1.61 R= 3.6 x 10^6

Orif	Station 1	2	3	4	24	5	6	7	8	9	10	Orif
					α= − 6		δ= 0.0					
1	.812	.706	.745	.721		.532	.742	.702				1
2	.249	.325	.354	.375		.385	.397	.207				2
3	.205	.222	.251	.267		.250	.327	.096				3
4	.202	.187	.218	.235		.264	.276	.046				4
5	.180	.172	.188	.211		.234	.250	.000				5
6	.160	.155	.175	.191		.215	.225	−.015				6
7	.152	.148	.160	.172		.194	.196	−.031				7
8	.144	.122	.122	.138		.153	.168	−.045				8
9	.145	.106	.113	.117		.141	.158	−.054				9
10	.128	.113		.124		.138	.151	−.073				10
11	.132	.123		.128		.139						11
12	.138	.129		.140		.147	.157	−.072				12
13	.128	.132	.141	.140		.149	.155	−.090				13
14	.131	.124	.135	.135		.150	.156	−.093				14
15	.119	.090	.095	.102		.098	.105	−.186				15
16	.054	−.059	−.049	−.035		.051	.087	−.057				16
17	−.097	−.054	−.057	−.050								17
18	.059	.081	.120	−.017		.028	−.007	−.154				18
19	.013	−.024	−.011	−.029	−.039	−.036	−.042	−.175				19
20	.059	−.040	−.039	−.039	−.036	−.045	−.055	−.174				20
21	−.014	−.033	−.031	−.061	−.099	−.050	−.066	−.169				21
22	.003	−.017	−.032	−.028	−.045	−.043	−.064	−.157				22
					α= − 6		δ= 5.0					
1	.814	.707	.744	.718		.532	.741	.699				1
2	.250	.327	.359	.380		.391	.401	.215				2
3	.209	.226	.255	.270		.258	.328	.112				3
4	.203	.190	.222	.238		.272	.279	.052				4
5	.182	.172	.190	.218		.238	.255	.001				5
6	.162	.157	.174	.193		.223	.226	−.012				6
7	.154	.147	.164	.178		.196	.202	−.032				7
8	.146	.126	.126	.144		.155	.175	−.045				8
9	.147	.110	.114	.122		.144	.167	−.057				9
10	.130	.118		.130		.142	.155	−.073				10
11	.133	.126		.135		.147						11
12	.139	.130		.147		.153	.166	−.072				12
13	.130	.136	.144	.146		.158	.162	−.095				13
14	.133	.131	.155	.150		.158	.159	−.110				14
15	.121	.322	.320	.296		.112	.111	−.203				15
16	.119	.374	.363	.379		.088	.079	−.066				16
17	.029	.117	.056	−.023								17
18	.018	.008	.039	−.135		.079	.002	−.155				18
19	−.014	−.112	−.116	−.086	−.075	.027	−.027	−.180				19
20	.018	−.130	−.132	−.094	−.083	.007	−.037	−.178				20
21	−.068	−.111	−.133	−.108	−.136	−.009	−.020	−.174				21
22	−.048	−.057	−.133	−.103	−.112	−.025	−.019	−.161				22
					α= − 6		δ= 10.0					
1	.811	.707	.744	.721		.532	.743	.700				1
2	.250	.328	.357	.379		.392	.400	.218				2
3	.206	.226	.255	.274		.263	.329	.113				3
4	.204	.193	.218	.238		.273	.287	.051				4
5	.181	.173	.188	.216		.241	.258	.001				5
6	.162	.157	.175	.197		.224	.227	−.011				6
7	.152	.151	.166	.179		.195	.201	−.031				7
8	.144	.125	.126	.145		.157	.177	−.044				8
9	.144	.109	.115	.126		.145	.167	−.053				9
10	.127	.118		.134		.145	.157	−.071				10
11	.132	.127		.137		.145						11
12	.137	.132		.151		.160	.175	−.070				12
13	.130	.136	.223	.314		.238	.199	−.096				13
14	.132	.349	.421	.409		.274	.228	−.117				14
15	.276	.454	.464	.422		.216	.170	−.200				15
16	.357	.484	.483	.369		.182	.132	−.057				16
17	.387	.344	.430	.347								17
18	−.037	−.083	−.080	−.224		.118	.063	−.152				18
19	−.069	−.195	−.211	−.188	−.098	.043	.027	−.173				19
20	−.057	−.208	−.224	−.197	−.144	.013	.008	−.173				20
21	−.124	−.188	−.223	−.189	−.201	−.010	−.001	−.167				21
22	−.095	−.079	−.220	−.197	−.178	−.038	−.010	−.152				22

Table 14 Continued

Pressure coefficients on swept wing

Configuration 5 M= 1.61 R=3.6 x 10^6

Orif	Station 1	2	3	4	24	5	6	7	8	9	10	Orif
					α= − 6		δ= 20.0					
1	.814	.710	.746	.722		.529	.740	.695				1
2	.251	.328	.359	.384		.391	.401	.215				2
3	.206	.227	.255	.273		.264	.328	.109				3
4	.206	.192	.221	.241		.274	.282	.051				4
5	.182	.172	.192	.220		.241	.253	.001				5
6	.161	.158	.179	.197		.223	.229	-.015				6
7	.156	.152	.165	.182		.200	.200	-.032				7
8	.145	.125	.127	.147		.155	.178	-.048				8
9	.148	.114	.114	.127		.143	.169	-.057				9
10	.130	.120		.134		.163	.197	-.039				10
11	.134	.128		.272		.315						11
12	.139	.133		.439		.364	.328	.003				12
13	.128	.327	.469	.477		.360	.321	-.023				13
14	.134	.495	.502	.486		.330	.297	-.117				14
15	.398	.473	.503	.452		.249	.211	-.173				15
16	.408	.559	.508	.343		.218	.186	-.032				16
17	1.576	1.204	1.065	.859								17
18	-.233	-.272	-.298	-.353		.121	.087	-.136				18
19	-.222	-.342	-.362	-.354	-.070	.043	.049	-.162				19
20	-.241	-.338	-.364	-.364	-.228	.001	.021	-.163				20
21	-.260	-.321	-.361	-.352	-.342	-.026	.001	-.158				21
22	-.260	-.175	-.302	-.363	-.293	-.056	-.009	-.142				22
					α= − 6		δ= 30.0					
1	.812	.706	.745	.722		.530	.742	.697				1
2	.249	.329	.360	.382		.393	.403	.215				2
3	.205	.226	.255	.273		.264	.326	.112				3
4	.205	.193	.221	.241		.275	.285	.053				4
5	.180	.170	.187	.223		.244	.255	.000				5
6	.160	.157	.177	.197		.220	.231	-.016				6
7	.154	.151	.165	.182		.197	.200	-.033				7
8	.143	.124	.126	.148		.154	.179	-.046				8
9	.147	.109	.116	.124		.139	.171	-.042				9
10	.127	.120		.133		.187	.261	.016				10
11	.131	.126		.299		.352						11
12	.137	.130		.455		.393	.353	.017				12
13	.129	.209	.474	.492		.387	.338	-.014				13
14	.132	.484	.509	.507		.351	.302	-.128				14
15	.354	.517	.518	.490		.256	.221	-.173				15
16	.350	.526	.502	.401		.229	.198	-.028				16
17	1.441	1.146	1.145	.994								17
18	-.247	-.403	-.387	-.337		.124	.088	-.138				18
19	-.343	-.422	-.389	-.339	-.109	.043	.048	-.164				19
20	-.346	-.420	-.394	-.348	-.223	.001	.018	-.169				20
21	-.371	-.407	-.389	-.345	-.346	-.035	.001	-.166				21
22	-.359	-.297	-.343	-.321	-.293	-.071	-.010	-.152				22
					α= − 3		δ= 0.0					
1	.841	.704	.761	.730		.692	.730	.833				1
2	.165	.190	.227	.247		.263	.254	.117				2
3	.128	.111	.100	.126		.117	.158	-.039				3
4	.119	.089	.114	.119		.135	.146	.000				4
5	.098	.078	.088	.100		.117	.124	-.014				5
6	.080	.067	.073	.079		.096	.107	-.022				6
7	.073	.066	.063	.068		.081	.085	-.033				7
8	.066	.045	.036	.044		.052	.060	-.048				8
9	.063	.029	.023	.025		.039	.052	-.043				9
10	.058	.036		.027		.037	.038	-.070				10
11	.052	.044		.031		.036						11
12	.055	.051		.042		.042	.046	-.074				12
13	.059	.055	.051	.045		.037	.049	-.105				13
14	.059	.052	.050	.042		.047	.049	.014				14
15	.044	.019	.022	.022		.007	.008	-.152				15
16	-.059	-.051	-.068	-.053		-.023	.008	.005				16
17	-.074	-.038	-.045	-.044								17
18	.009	-.024	.015	-.066		-.048	-.088	-.205				18
19	-.051	-.092	-.080	-.104	-.104	-.110	-.125	-.181				19
20	-.029	-.101	-.096	-.107	-.105	-.120	-.132	-.177				20
21	-.080	-.096	-.094	-.116	-.149	-.116	-.132	-.198				21
22	-.055	-.054	-.093	-.091	-.107	-.109	-.124	-.196				22

Table 14 Continued

Pressure coefficients on swept wing

Configuration 5 M= 1.61 R=3.6 x 10^6

Orif	Station 1	2	3	4	24	5	6	7	8	9	10	Orif
					α= 0		δ= -30.0					
1	.866	.819	.742	.707		.731	.629	.857				1
2	.115	.097	.124	.148		.171	.168	.093				2
3	.063	.046	.052	.081		.072	.080	-.016				3
4	.066	.024	.030	.029		.030	.041	.005				4
5	.048	.014	.009	.014		.017	.024	.008				5
6	.029	.007	.005	-.001		.010	.011	-.007				6
7	.023	.007	-.007	-.007		.000	-.006	.003				7
8	.018	-.009	-.022	-.024		-.022	-.016	-.019				8
9	.011	-.023	-.030	-.036		-.038	-.021	-.007				9
10	.007	-.018		-.031		-.035	-.033	-.029				10
11	.005	-.008		-.031		-.030						11
12	.008	-.001		-.020		-.017	-.028	-.056				12
13	.001	.003	-.011	.190		.085	-.027	-.048				13
14	.007	.003	.068	.297		.129	-.026	.047				14
15	.000	.000	.294	.313		.109	-.017	-.048				15
16	.060	.172	.310	.211		.101	.025	.062				16
17	.832	1.005	1.116	1.043								17
18	-.018	.120	.287	.130		.070	-.114	-.101				18
19	.119	.113	.270	.385	-.037	.064	-.116	-.134				19
20	.194	.249	.250	.400	-.027	.048	-.100	-.157				20
21	.257	.615	.459	.066	-.152	.026	-.068	-.160				21
22	.341	.428	.430	-.002	-.330	.011	.021	-.150				22
					α= 0		δ= -20.0					
1	.871	.822	.743	.710		.737	.635	.860				1
2	.118	.097	.125	.151		.176	.173	.095				2
3	.064	.038	.052	.086		.075	.083	-.012				3
4	.065	.024	.029	.035		.036	.046	.007				4
5	.051	.014	.010	.020		.021	.030	.011				5
6	.029	.007	.007	.003		.013	.016	-.003				6
7	.025	.007	-.002	-.003		.004	.001	.004				7
8	.020	-.010	-.020	-.018		-.019	-.011	-.013				8
9	.013	-.022	-.025	-.035		-.035	-.018	-.006				9
10	.011	-.018		-.027		-.034	-.029	-.028				10
11	.006	-.010		-.025		-.030						11
12	.008	.003		-.020		-.022	-.022	-.050				12
13	.001	.007	-.005	-.017		-.022	-.022	-.043				13
14	.007	.001	-.003	-.016		-.021	-.025	.063				14
15	-.007	-.025	-.014	.123		-.047	-.036	-.044				15
16	-.027	.095	.114	.235		-.035	.004	.059				16
17	1.627	1.067	.681	.474								17
18	-.240	-.001	.057	.188		-.095	-.130	-.099				18
19	.027	.037	.186	.182	.050	-.118	-.161	-.132				19
20	.108	.176	.227	.145	-.005	-.054	-.170	-.153				20
21	.131	.226	.246	.008	-.132	-.026	-.170	-.159				21
22	.130	.162	.183	-.058	-.299	-.011	-.138	-.150				22
					α= 0		δ= -10.0					
1	.864	.817	.741	.709		.735	.637	.858				1
2	.116	.095	.124	.150		.175	.174	.093				2
3	.064	.042	.051	.083		.073	.082	-.015				3
4	.065	.027	.031	.029		.034	.047	.005				4
5	.050	.015	.012	.018		.018	.029	.008				5
6	.030	.008	.005	-.001		.013	.015	-.005				6
7	.023	.009	-.005	-.006		.001	-.002	.003				7
8	.018	-.007	-.018	-.024		-.019	-.014	-.015				8
9	.013	-.022	-.025	-.036		-.030	-.018	-.007				9
10	.008	-.016		-.029		-.033	-.028	-.031				10
11	.007	-.007		-.029		-.028						11
12	.010	.000		-.019		-.024	-.024	-.042				12
13	.001	.005	-.003	-.016		-.022	-.024	-.036				13
14	.009	.004	-.003	-.015		-.020	-.027	.084				14
15	-.007	-.028	-.023	-.032		-.049	-.043	-.046				15
16	-.058	-.100	-.087	-.012		-.059	-.034	.059				16
17	-.069	.059	.023	-.011								17
18	-.113	-.106	-.070	-.041		-.098	-.134	-.099				18
19	-.070	-.058	-.020	-.053	-.070	-.149	-.158	-.132				19
20	-.051	-.028	.004	-.040	-.068	-.153	-.167	-.155				20
21	-.014	-.013	.037	-.070	-.081	-.151	-.166	-.158				21
22	-.044	-.011	.016	-.108	-.188	-.118	-.147	-.149				22

Table 14 Continued

Pressure coefficients on swept wing

Configuration 5 M= 1.61 R=3.6 x 10^6

Orif	Station 1	2	3	4	24	5	6	7	8	9	10	Orif
					α= 0		δ= -5.0					
1	.864	.822	.747	.712		.734	.637	.861				1
2	.117	.099	.127	.155		.179	.174	.092				2
3	.064	.043	.051	.086		.079	.088	-.017				3
4	.066	.028	.033	.035		.039	.048	.003				4
5	.049	.019	.013	.022		.024	.031	.009				5
6	.032	.013	.007	.004		.018	.015	-.005				6
7	.022	.009	-.003	-.004		.004	.002	.006				7
8	.019	-.008	-.021	-.018		-.016	-.011	-.014				8
9	.012	-.022	-.025	-.032		-.032	-.016	-.006				9
10	.008	-.015		-.025		-.032	-.028	-.032				10
11	.006	-.007		-.026		-.029						11
12	.008	.003		-.014		-.019	-.027	-.043				12
13	.000	.007	.002	-.008		-.017	-.025	-.038				13
14	.006	.013	.005	.000		-.015	-.025	.083				14
15	.000	-.019	-.018	-.017		-.046	-.039	-.044				15
16	-.046	-.087	-.082	-.015		-.052	-.030	.062				16
17	-.013	.022	-.090	-.093								17
18	-.114	-.140	-.072	-.111		-.091	-.129	-.101				18
19	-.109	-.151	-.095	-.138	-.117	-.139	-.154	-.130				19
20	-.131	-.152	-.095	-.136	-.132	-.142	-.161	-.155				20
21	-.114	-.161	-.081	-.141	-.157	-.144	-.156	-.156				21
22	-.131	-.109	-.081	-.131	-.154	-.138	-.140	-.145				22
					α= 0		δ= 0.0					
1	.867	.818	.741	.711		.736	.635	.859				1
2	.115	.097	.125	.150		.179	.170	.095				2
3	.064	.043	.052	.084		.078	.083	-.015				3
4	.064	.026	.031	.034		.037	.044	.004				4
5	.049	.017	.010	.020		.025	.028	.008				5
6	.028	.008	.007	.006		.014	.013	-.005				6
7	.025	.009	-.005	.000		.006	.000	.002				7
8	.019	-.007	-.022	-.018		-.021	-.013	-.019				8
9	.013	-.020	-.028	-.032		-.035	-.017	-.007				9
10	.008	-.016		-.027		-.036	-.030	-.030				10
11	.008	-.008		-.025		-.031						11
12	.011	-.002		-.017		-.026	-.025	-.045				12
13	.000	.006	-.007	-.013		-.025	-.026	-.037				13
14	.006	.004	-.003	-.013		-.022	-.025	.079				14
15	-.005	-.029	-.029	-.030		-.051	-.042	-.046				15
16	-.048	-.054	-.069	-.058		-.059	-.025	.060				16
17	-.076	-.044	-.047	-.039								17
18	-.033	-.032	-.021	-.084		-.100	-.133	-.100				18
19	-.069	-.119	-.115	-.132	-.131	-.153	-.162	-.130				19
20	-.090	-.133	-.142	-.152	-.140	-.159	-.168	-.154				20
21	-.104	-.124	-.134	-.151	-.167	-.155	-.168	-.158				21
22	-.087	-.082	-.132	-.125	-.136	-.150	-.154	-.151				22
					α= 0		δ= 5.0					
1	.867	.821	.745	.711		.736	.637	.857				1
2	.118	.095	.127	.152		.178	.175	.091				2
3	.066	.045	.055	.086		.078	.084	-.017				3
4	.065	.026	.035	.035		.037	.048	.004				4
5	.047	.017	.013	.019		.022	.029	.007				5
6	.030	.008	.007	.004		.017	.014	-.005				6
7	.024	.009	-.004	-.005		.005	.001	.002				7
8	.022	-.007	-.021	-.019		-.018	-.012	-.016				8
9	.017	-.022	-.027	-.036		-.033	-.018	-.008				9
10	.011	-.016		-.028		-.031	-.029	-.031				10
11	.007	-.009		-.026		-.025						11
12	.010	.002		-.021		-.021	-.024	-.040				12
13	.000	.007	-.007	-.017		-.022	-.023	-.034				13
14	.007	.004	-.003	-.014		-.020	-.025	.082				14
15	-.005	.122	.112	.048		-.050	-.042	-.046				15
16	-.032	.193	.163	.155		-.061	-.035	.059				16
17	-.068	.012	-.012	-.069								17
18	-.062	-.063	-.047	-.157		-.095	-.134	-.102				18
19	-.088	-.165	-.174	-.168	-.137	-.149	-.162	-.131				19
20	-.107	-.181	-.191	-.193	-.174	-.149	-.168	-.157				20
21	-.136	-.169	-.186	-.181	-.195	-.135	-.168	-.157				21
22	-.113	-.084	-.189	-.150	-.165	-.131	-.153	-.150				22

Table14 Continued

Pressure coefficients on swept wing

Configuration 5 M=1.61 R=3.6 x 10^6

Orif	Station 1	2	3	4	24	5	6	7	8	9	10	Orif
					α= 0		δ= 10.0					
1	.867	.820	.743	.712		.735	.634	.858				1
2	.115	.096	.125	.153		.178	.177	.092				2
3	.065	.041	.052	.084		.080	.083	-.018				3
4	.065	.024	.032	.033		.038	.044	.005				4
5	.048	.015	.012	.018		.022	.030	.010				5
6	.032	.010	.007	.003		.014	.014	-.007				6
7	.026	.009	-.005	-.004		.004	.001	.005				7
8	.017	-.007	-.022	-.021		-.017	-.013	-.016				8
9	.013	-.022	-.027	-.035		-.033	-.016	-.007				9
10	.007	-.016		-.027		-.031	-.027	-.032				10
11	.007	-.008		-.024		-.024						11
12	.009	-.002		-.018		-.022	-.025	-.037				12
13	.002	.005	-.001	-.006		-.023	-.024	-.033				13
14	.007	.138	.208	.164		-.017	-.025	.087				14
15	.058	.270	.259	.196		-.031	-.046	-.046				15
16	.181	.313	.285	.192		-.038	-.038	.060				16
17	.172	.168	.215	.133								17
18	-.127	-.131	-.124	-.239		-.063	-.135	-.101				18
19	-.138	-.241	-.247	-.234	-.111	-.106	-.163	-.132				19
20	-.165	-.253	-.260	-.257	-.227	-.096	-.168	-.155				20
21	-.204	-.242	-.260	-.240	-.250	-.101	-.169	-.156				21
22	-.178	-.101	-.251	-.226	-.214	-.116	-.144	-.149				22
					α= 0		δ= 20.0					
1	.866	.824	.741	.710		.734	.637	.862				1
2	.116	.095	.127	.152		.177	.179	.095				2
3	.064	.044	.055	.082		.077	.086	-.018				3
4	.065	.025	.032	.034		.036	.049	.006				4
5	.048	.014	.012	.022		.022	.031	.009				5
6	.031	.008	.007	.004		.014	.018	-.004				6
7	.025	.008	-.003	-.004		.005	.003	.007				7
8	.022	-.010	-.020	-.020		-.018	-.011	-.015				8
9	.015	-.021	-.027	-.033		-.032	-.013	-.004				9
10	.011	-.018		-.028		-.030	-.025	-.027				10
11	.007	-.007		-.026		-.024						11
12	.009	.002		.184		.015	-.022	-.041				12
13	.002	.040	.268	.257		.084	-.022	-.035				13
14	.007	.312	.299	.262		.102	-.018	.070				14
15	.195	.282	.282	.224		.068	-.018	-.043				15
16	.237	.424	.350	.267		.062	.015	.063				16
17	1.433	1.117	.901	.695								17
18	-.295	-.281	-.297	-.320		.005	-.099	-.099				18
19	-.270	-.357	-.372	-.356	-.113	-.028	-.112	-.126				19
20	-.284	-.357	-.377	-.372	-.275	-.059	-.104	-.152				20
21	-.294	-.345	-.373	-.363	-.355	-.086	-.072	-.156				21
22	-.310	-.215	-.260	-.359	-.313	-.102	-.060	-.145				22
					α= 0		δ= 30.0					
1	.867	.820	.743	.711		.732	.641	.861				1
2	.114	.098	.127	.157		.181	.182	.093				2
3	.066	.041	.052	.084		.080	.085	-.017				3
4	.067	.027	.032	.035		.038	.051	.007				4
5	.050	.016	.014	.021		.024	.033	.010				5
6	.032	.011	.008	.005		.017	.019	-.003				6
7	.026	.010	.000	-.001		.009	.007	.005				7
8	.018	-.007	-.019	-.021		-.015	-.009	-.014				8
9	.012	-.022	-.028	-.029		-.030	-.012	-.007				9
10	.009	-.016		-.023		-.028	-.027	-.029				10
11	.003	-.008		-.025		-.024						11
12	.007	.002		.136		.069	-.022	-.049				12
13	.009	.007	.200	.276		.149	-.019	-.041				13
14	.011	.183	.303	.295		.155	.004	.047				14
15	.110	.331	.314	.300		.127	.054	-.043				15
16	.122	.326	.371	.397		.109	.080	.067				16
17	.702	.866	.953	.853								17
18	-.178	-.412	-.348	-.305		.037	-.026	-.101				18
19	-.374	-.431	-.344	-.303	-.264	-.020	-.043	-.122				19
20	-.391	-.430	-.354	-.314	-.325	-.053	-.053	-.147				20
21	-.415	-.425	-.365	-.324	-.333	-.086	-.064	-.146				21
22	-.406	-.338	-.346	-.355	-.311	-.094	-.023	-.081				22

Table 14 Continued

Pressure coefficients on swept wing

Configuration 5 M= 1.61 R= 3.6 x 10^6

Orif	Station 1	2	3	4	24	5	6	7	8	9	10	Orif
					α= 3		δ= 0.0					
1	.884	.810	.725	.650		.757	.465	.859				1
2	.061	-.015	-.015	-.024		-.011	-.019	-.014				2
3	-.006	-.022	-.033	-.022		-.013	-.019	-.019				3
4	.010	-.037	-.051	-.055		-.042	-.041	-.048				4
5	-.003	-.050	-.057	-.059		-.058	-.050	-.040				5
6	-.022	-.050	-.068	-.076		-.068	-.065	-.055				6
7	-.025	-.047	-.072	-.074		-.077	-.080	-.048				7
8	-.036	-.061	-.081	-.088		-.099	-.086	-.064				8
9	-.041	-.073	-.085	-.101		-.109	-.092	-.060				9
10	-.043	-.066		-.095		-.101	-.099	-.076				10
11	-.047	-.059		-.094		-.098						11
12	-.046	-.050		-.085		-.092	-.093	-.118				12
13	-.046	-.045	-.060	-.082		-.093	-.099	-.107				13
14	-.042	-.048	-.059	-.074		-.091	-.099	-.005				14
15	-.051	-.075	-.076	-.087		-.116	-.105	-.104				15
16	-.098	-.069	-.079	-.061		-.109	-.073	.003				16
17	-.022	.025	-.038	-.030								17
18	-.089	-.080	-.086	-.097		-.153	-.187	-.152				18
19	-.071	-.118	-.139	-.148	-.160	-.197	-.205	-.175				19
20	-.124	-.114	-.149	-.180	-.176	-.193	-.208	-.201				20
21	-.108	-.081	-.146	-.167	-.186	-.188	-.202	-.213				21
22	-.079	-.024	-.128	-.136	-.175	-.171	-.180	-.220				22
					α= 6		δ= -30.0					
1	.881	.643	.642	.549		.770	.295	.908				1
2	.014	-.131	-.151	-.159		-.167	-.171	-.135				2
3	-.077	-.127	-.141	-.141		-.152	-.157	-.125				3
4	-.043	-.109	-.157	-.164		-.165	-.169	-.156				4
5	-.059	-.120	-.168	-.164		-.170	-.173	-.165				5
6	-.071	-.113	-.166	-.172		-.173	-.177	-.154				6
7	-.076	-.105	-.145	-.182		-.181	-.187	-.164				7
8	-.091	-.116	-.153	-.190		-.194	-.194	-.191				8
9	-.089	-.126	-.155	-.202		-.205	-.193	-.238				9
10	-.090	-.119		-.195		-.201	-.204	-.284				10
11	-.093	-.113		-.185		-.199						11
12	-.091	-.106		-.164		-.196	-.194	-.280				12
13	-.095	-.102	-.122	-.055		-.150	-.195	-.290				13
14	-.089	-.100	-.078	.094		-.076	-.197	-.212				14
15	-.095	-.078	.124	.125		-.089	-.201	-.323				15
16	-.029	.080	.144	.034		-.096	-.164	-.175				16
17	1.489	1.146	1.133	1.015								17
18	-.016	-.049	.095	.055		-.115	-.268	-.346				18
19	-.248	-.002	.096	.169	-.196	-.123	-.284	-.361				19
20	.016	.041	.085	.145	-.124	-.133	-.279	-.352				20
21	.070	.295	.233	-.089	-.212	-.153	-.171	-.343				21
22	.208	.358	.368	-.007	-.336	-.098	-.091	-.353				22
					α= 6		δ= -20.0					
1	.883	.642	.648	.550		.766	.300	.901				1
2	.015	-.132	-.149	-.158		-.170	-.170	-.130				2
3	-.071	-.127	-.144	-.142		-.150	-.154	-.124				3
4	-.040	-.106	-.158	-.161		-.167	-.170	-.154				4
5	-.052	-.115	-.163	-.164		-.174	-.172	-.165				5
6	-.069	-.109	-.166	-.176		-.177	-.177	-.153				6
7	-.075	-.104	-.142	-.180		-.177	-.186	-.163				7
8	-.091	-.113	-.150	-.193		-.194	-.196	-.188				8
9	-.088	-.125	-.155	-.204		-.203	-.194	-.235				9
10	-.086	-.116		-.196		-.197	-.201	-.284				10
11	-.092	-.111		-.182		-.197						11
12	-.092	-.104		-.164		-.197	-.195	-.284				12
13	-.095	-.101	-.121	-.159		-.196	-.196	-.293				13
14	-.088	-.097	-.118	-.151		-.191	-.197	-.219				14
15	-.097	-.117	-.107	.000		-.209	-.201	-.293				15
16	-.093	-.007	.016	.075		-.201	-.168	-.151				16
17	1.683	1.134	.953	.812								17
18	-.236	-.163	-.075	.021		-.243	-.268	-.345				18
19	-.180	-.117	-.062	-.003	-.107	-.279	-.287	-.345				19
20	-.007	.061	.087	.006	-.105	-.228	-.285	-.345				20
21	.019	.115	.133	-.101	-.235	-.198	-.274	-.338				21
22	.009	.070	.077	-.135	-.328	-.103	-.210	-.347				22

Table 14 Continued

Pressure coefficients on swept wing

Configuration 5 M=1.61 R=3.6 x 10^6

Orif	Station 1	2	3	4	24	5	6	7	8	9	10	Orif
					α= 6		δ= -10.0					
1	.882	.642	.648	.551		.768	.295	.902				1
2	.009	-.134	-.149	-.157		-.166	-.169	-.128				2
3	-.078	-.129	-.145	-.139		-.143	-.153	-.122				3
4	-.043	-.111	-.160	-.160		-.162	-.168	-.156				4
5	-.055	-.117	-.165	-.162		-.166	-.171	-.157				5
6	-.070	-.110	-.164	-.174		-.171	-.174	-.152				6
7	-.077	-.104	-.144	-.179		-.179	-.186	-.160				7
8	-.090	-.114	-.153	-.189		-.192	-.193	-.188				8
9	-.091	-.125	-.153	-.201		-.198	-.195	-.233				9
10	-.091	-.117		-.190		-.197	-.199	-.282				10
11	-.095	-.113		-.182		-.196						11
12	-.094	-.104		-.162		-.192	-.192	-.291				12
13	-.095	-.099	-.122	-.153		-.194	-.192	-.300				13
14	-.091	-.097	-.120	-.147		-.186	-.196	-.230				14
15	-.099	-.122	-.134	-.158		-.203	-.202	-.283				15
16	-.179	-.201	-.191	-.123		-.209	-.173	-.138				16
17	-.011	.061	.081	.001								17
18	-.207	-.192	-.204	-.137		-.239	-.266	-.343				18
19	-.138	-.116	-.088	-.119	-.157	-.280	-.286	-.332				19
20	-.153	-.103	-.085	-.152	-.186	-.273	-.281	-.337				20
21	-.105	-.096	-.070	-.169	-.185	-.261	-.276	-.328				21
22	-.090	-.041	-.066	-.147	-.226	-.162	-.228	-.342				22
					α= 6		δ= - 5.0					
1	.884	.639	.646	.549		.765	.301	.900				1
2	.012	-.138	-.150	-.159		-.170	-.169	-.127				2
3	-.076	-.129	-.142	-.142		-.151	-.153	-.120				3
4	-.044	-.109	-.158	-.164		-.164	-.168	-.155				4
5	-.059	-.117	-.168	-.163		-.168	-.171	-.155				5
6	-.071	-.111	-.163	-.175		-.173	-.172	-.152				6
7	-.078	-.106	-.145	-.181		-.180	-.186	-.156				7
8	-.091	-.117	-.152	-.193		-.193	-.191	-.185				8
9	-.091	-.128	-.154	-.205		-.199	-.189	-.226				9
10	-.089	-.117		-.192		-.197	-.197	-.275				10
11	-.096	-.113		-.181		-.195						11
12	-.094	-.105		-.158		-.191	-.189	-.286				12
13	-.095	-.099	-.115	-.149		-.190	-.192	-.297				13
14	-.093	-.091	-.108	-.134		-.182	-.193	-.228				14
15	-.093	-.108	-.121	-.137		-.203	-.195	-.280				15
16	-.150	-.156	-.146	-.114		-.198	-.167	-.137				16
17	-.115	-.075	-.197	-.153								17
18	-.181	-.205	-.154	-.161		-.238	-.266	-.340				18
19	-.184	-.226	-.188	-.217	-.199	-.270	-.283	-.332				19
20	-.255	-.232	-.192	-.259	-.256	-.265	-.277	-.335				20
21	-.188	-.241	-.183	-.243	-.252	-.256	-.265	-.326				21
22	-.158	-.102	-.111	-.149	-.183	-.176	-.218	-.334				22
					α= 6		δ= 0.0					
1	.884	.652	.649	.553		.768	.309	.900				1
2	.013	-.113	-.121	-.138		-.132	-.139	-.108				2
3	-.066	-.112	-.124	-.127		-.121	-.129	-.095				3
4	-.037	-.098	-.140	-.144		-.136	-.138	-.125				4
5	-.051	-.108	-.154	-.141		-.143	-.142	-.132				5
6	-.067	-.105	-.153	-.156		-.151	-.151	-.131				6
7	-.068	-.099	-.134	-.162		-.157	-.162	-.128				7
8	-.085	-.109	-.141	-.167		-.173	-.164	-.152				8
9	-.084	-.121	-.144	-.179		-.182	-.165	-.180				9
10	-.085	-.113		-.171		-.176	-.172	-.210				10
11	-.091	-.107		-.163		-.175						11
12	-.091	-.097		-.149		-.168	-.167	-.236				12
13	-.091	-.093	-.115	-.141		-.168	-.170	-.231				13
14	-.087	-.093	-.113	-.134		-.167	-.175	-.157				14
15	-.092	-.117	-.128	-.142		-.185	-.174	-.208				15
16	-.129	-.087	-.095	-.076		-.178	-.140	-.097				16
17	-.097	-.048	-.059	-.051								17
18	-.107	-.114	-.126	-.136		-.222	-.244	-.253				18
19	-.121	-.175	-.190	-.211	-.211	-.257	-.260	-.264				19
20	-.200	-.184	-.204	-.253	-.244	-.249	-.256	-.280				20
21	-.173	-.168	-.203	-.222	-.231	-.243	-.251	-.279				21
22	-.123	-.057	-.137	-.146	-.172	-.194	-.223	-.287				22

Table 14 Continued

Pressure coefficients on swept wing

Configuration 3 M= 1.61 R=3.6 x 10^6

Orif	Station 1	2	3	4	24	5	6	7	8	9	10	Orif
					α= 6		δ= 5.0					
1	.888	.642	.649	.551		.768	.299	.901				1
2	.011	-.127	-.139	-.152		-.154	-.160	-.121				2
3	-.075	-.122	-.137	-.137		-.137	-.149	-.112				3
4	-.039	-.105	-.154	-.153		-.152	-.159	-.145				4
5	-.052	-.112	-.160	-.155		-.157	-.164	-.149				5
6	-.067	-.109	-.161	-.167		-.164	-.168	-.139				6
7	-.072	-.101	-.139	-.174		-.170	-.178	-.147				7
8	-.089	-.111	-.149	-.182		-.188	-.184	-.174				8
9	-.085	-.124	-.150	-.195		-.195	-.183	-.208				9
10	-.084	-.115		-.184		-.192	-.191	-.248				10
11	-.091	-.112		-.176		-.190						11
12	-.092	-.101		-.157		-.186	-.183	-.268				12
13	-.093	-.097	-.116	-.151		-.186	-.188	-.271				13
14	-.086	-.095	-.114	-.148		-.182	-.190	-.202				14
15	-.094	-.002	-.006	-.058		-.202	-.192	-.246				15
16	-.103	.074	.048	.031		-.192	-.156	-.122				16
17	-.074	-.015	-.011	-.009								17
18	-.141	-.138	-.143	-.162		-.233	-.258	-.292				18
19	-.142	-.222	-.243	-.242	-.212	-.271	-.270	-.300				19
20	-.228	-.229	-.253	-.288	-.273	-.263	-.272	-.307				20
21	-.226	-.217	-.251	-.256	-.270	-.254	-.263	-.302				21
22	-.150	-.075	-.168	-.163	-.197	-.176	-.232	-.310				22
					α= 6		δ= 10.0					
1	.882	.645	.648	.550		.769	.302	.901				1
2	.007	-.133	-.147	-.158		-.161	-.161	-.124				2
3	-.078	-.130	-.141	-.144		-.144	-.148	-.114				3
4	-.045	-.108	-.157	-.159		-.156	-.158	-.150				4
5	-.055	-.116	-.165	-.163		-.161	-.165	-.152				5
6	-.070	-.110	-.164	-.172		-.168	-.168	-.145				6
7	-.077	-.103	-.143	-.180		-.174	-.181	-.152				7
8	-.092	-.115	-.149	-.191		-.189	-.187	-.178				8
9	-.089	-.127	-.152	-.202		-.197	-.188	-.220				9
10	-.089	-.114		-.191		-.195	-.195	-.266				10
11	-.097	-.111		-.181		-.192						11
12	-.095	-.104		-.161		-.189	-.185	-.279				12
13	-.095	-.098	-.117	-.152		-.188	-.189	-.283				13
14	-.089	.005	.075	.022		-.182	-.191	-.216				14
15	-.078	.145	.116	.050		-.198	-.193	-.262				15
16	.058	.187	.135	.060		-.184	-.156	-.128				16
17	.154	.096	.110	.047								17
18	-.197	-.195	-.209	-.206		-.221	-.261	-.315				18
19	-.195	-.284	-.309	-.298	-.198	-.251	-.282	-.314				19
20	-.273	-.296	-.318	-.340	-.319	-.240	-.279	-.321				20
21	-.286	-.282	-.318	-.310	-.326	-.230	-.269	-.315				21
22	-.223	-.137	-.188	-.203	-.251	-.126	-.233	-.323				22
					α= 6		δ= 20.0					
1	.886	.643	.648	.548		.767	.299	.899				1
2	.007	-.131	-.149	-.158		-.164	-.167	-.124				2
3	-.078	-.127	-.141	-.142		-.145	-.151	-.116				3
4	-.042	-.108	-.158	-.158		-.159	-.168	-.150				4
5	-.055	-.119	-.165	-.163		-.165	-.168	-.152				5
6	-.072	-.109	-.165	-.170		-.171	-.170	-.149				6
7	-.079	-.104	-.145	-.182		-.175	-.182	-.154				7
8	-.091	-.114	-.155	-.191		-.190	-.189	-.181				8
9	-.089	-.126	-.155	-.206		-.199	-.188	-.224				9
10	-.089	-.116		-.193		-.197	-.197	-.270				10
11	-.095	-.112		-.151		-.097						11
12	-.095	-.103		.073		-.056	-.191	-.286				12
13	-.093	-.098	.118	.108		-.072	-.192	-.295				13
14	-.091	.171	.149	.117		-.091	-.192	-.222				14
15	.064	.143	.131	.066		-.135	-.187	-.270				15
16	.098	.343	.244	-.199		-.149	-.145	-.127				16
17	.905	1.066	.627	.095								17
18	-.293	-.312	-.321	-.290		-.197	-.255	-.329				18
19	-.299	-.374	-.392	-.382	-.269	-.224	-.270	-.324				19
20	-.330	-.378	-.401	-.394	-.356	-.230	-.258	-.332				20
21	-.335	-.365	-.383	-.370	-.382	-.226	-.242	-.324				21
22	-.330	-.250	-.278	-.261	-.272	-.090	-.091	-.334				22

Table 14 Continued

Pressure coefficients on swept wing

Configuration 5 M= 1.61 R=3.6 x 10^6

Orif	Station 1	2	3	4	24	5	6	7	8	9	10	Orif
					α= 6		δ= 30.0					
1	.883	.643	.647	.551		.772	.307	.897				1
2	.012	-.132	-.147	-.153		-.164	-.162	-.122				2
3	-.075	-.128	-.139	-.138		-.145	-.147	-.113				3
4	-.044	-.111	-.157	-.160		-.158	-.159	-.153				4
5	-.055	-.116	-.164	-.163		-.166	-.166	-.148				5
6	-.073	-.108	-.164	-.171		-.168	-.168	-.144				6
7	-.078	-.104	-.145	-.179		-.177	-.161	-.146				7
8	-.091	-.112	-.153	-.188		-.066	-.186	-.177				8
9	-.088	-.125	-.153	-.201		.066	-.162	-.218				9
10	-.088	-.117		-.137		.044	-.106	-.266				10
11	-.093	-.113		.109		.002						11
12	-.091	-.101		.124		-.059	-.080	-.283				12
13	-.090	-.099	.151	.135		-.110	-.087	-.294				13
14	-.080	.072	.184	.112		-.154	-.093	-.219				14
15	.107	.192	.143	.055		-.198	-.110	-.263				15
16	.168	.269	.191	-.259		-.208	-.095	-.114				16
17	.554	.809	.982	.284								17
18	-.241	-.390	-.366	-.299		-.234	-.225	-.325				18
19	-.368	-.420	-.368	-.271	-.357	-.241	-.234	-.310				19
20	-.387	-.419	-.375	-.295	-.351	-.249	-.201	-.320				20
21	-.394	-.410	-.372	-.318	-.323	-.249	-.100	-.304				21
22	-.376	-.321	-.341	-.347	-.302	-.124	-.027	-.299				22
					α= 9		δ= 0.0					
1	.937	.430	.433	.378		.747	.155	1.003				1
2	-.040	-.204	-.216	-.235		-.239	-.250	-.244				2
3	-.124	-.201	-.213	-.222		-.221	-.236	-.234				3
4	-.082	-.192	-.224	-.231		-.233	-.241	-.244				4
5	-.096	-.164	-.237	-.229		-.232	-.237	-.298				5
6	-.111	-.162	-.235	-.238		-.235	-.243	-.306				6
7	-.114	-.149	-.233	-.237		-.241	-.252	-.308				7
8	-.132	-.160	-.233	-.243		-.253	-.248	-.324				8
9	-.131	-.168	-.222	-.254		-.257	-.249	-.337				9
10	-.131	-.160		-.244		-.254	-.253	-.345				10
11	-.134	-.154		-.241		-.249						11
12	-.132	-.143		-.237		-.245	-.247	-.352				12
13	-.134	-.139	-.167	-.236		-.241	-.247	-.359				13
14	-.130	-.138	-.163	-.219		-.241	-.251	-.297				14
15	-.132	-.160	-.173	-.202		-.255	-.251	-.350				15
16	-.154	-.125	-.123	-.121		-.247	-.221	-.196				16
17	-.067	-.022	-.098	-.088								17
18	-.156	-.157	-.173	-.189		-.283	-.307	-.378				18
19	-.173	-.178	-.211	-.226	-.246	-.313	-.318	-.377				19
20	-.188	-.173	-.213	-.262	-.268	-.302	-.311	-.373				20
21	-.189	-.136	-.209	-.239	-.256	-.303	-.297	-.361				21
22	-.113	-.026	-.097	-.133	-.179	-.194	-.245	-.362				22
					α= 9		δ= 5.0					
1	.940	.421	.420	.370		.747	.142	1.010				1
2	-.047	-.219	-.235	-.250		-.260	-.273	-.272				2
3	-.139	-.219	-.230	-.240		-.241	-.255	-.267				3
4	-.092	-.213	-.241	-.245		-.250	-.260	-.271				4
5	-.101	-.172	-.249	-.247		-.251	-.257	-.343				5
6	-.116	-.170	-.245	-.253		-.254	-.258	-.359				6
7	-.122	-.155	-.246	-.253		-.255	-.264	-.367				7
8	-.139	-.167	-.252	-.260		-.265	-.265	-.374				8
9	-.136	-.178	-.233	-.273		-.271	-.263	-.381				9
10	-.135	-.167		-.263		-.267	-.270	-.369				10
11	-.142	-.162		-.261		-.264						11
12	-.140	-.153		-.256		-.260	-.261	-.376				12
13	-.145	-.150	-.175	-.253		-.260	-.261	-.391				13
14	-.137	-.146	-.168	-.241		-.255	-.263	-.332				14
15	-.143	-.035	-.041	-.101		-.271	-.263	-.382				15
16	-.114	.033	.002	-.089		-.261	-.232	-.217				16
17	-.055	-.008	-.018	-.062								17
18	-.178	-.187	-.196	-.211		-.298	-.315	-.402				18
19	-.203	-.243	-.279	-.280	-.270	-.330	-.326	-.400				19
20	-.244	-.249	-.284	-.317	-.321	-.327	-.322	-.393				20
21	-.257	-.228	-.284	-.294	-.308	-.325	-.313	-.378				21
22	-.168	-.089	-.146	-.150	-.198	-.189	-.255	-.375				22

Table 14 Continued

Pressure coefficients on swept wing

Configuration 5 M=1.61 R=3.6 x 10^6

Orif	Station 1	2	3	4	24	5	6	7	8	9	10	Orif
					α= 12		δ= -30.0					
1	.977	.240	.180	.191		.653	.004	.838				1
2	-.084	-.295	-.316	-.341		-.354	-.380	-.477				2
3	-.170	-.285	-.305	-.317		-.333	-.352	-.485				3
4	-.128	-.294	-.310	-.321		-.333	-.343	-.495				4
5	-.140	-.264	-.313	-.320		-.329	-.340	-.506				5
6	-.153	-.220	-.313	-.318		-.328	-.338	-.506				6
7	-.158	-.203	-.315	-.322		-.326	-.339	-.500				7
8	-.168	-.205	-.322	-.327		-.334	-.339	-.488				8
9	-.172	-.213	-.322	-.333		-.337	-.338	-.481				9
10	-.172	-.204		-.328		-.336	-.337	-.468				10
11	-.176	-.200		-.328		-.332						11
12	-.177	-.195		-.323		-.325	-.329	-.477				12
13	-.179	-.188	-.230	-.180		-.280	-.328	-.510				13
14	-.172	-.187	-.176	-.096		-.232	-.331	-.483				14
15	-.178	-.152	-.043	-.081		-.238	-.330	-.480				15
16	-.112	-.025	-.030	-.156		-.244	-.302	-.252				16
17	1.568	1.218	1.152	.987								17
18	.090	-.106	-.035	-.109		-.250	-.371	-.484				18
19	-.339	-.139	-.038	-.040	-.313	-.255	-.375	-.481				19
20	-.133	-.100	-.022	-.052	-.245	-.260	-.268	-.479				20
21	-.002	.197	.051	-.250	-.314	-.248	-.206	-.462				21
22	.131	.275	.229	-.142	-.333	-.198	-.193	-.424				22
					α= 12		δ= -20.0					
1	.974	.239	.179	.190		.656	.005	.839				1
2	-.088	-.293	-.315	-.342		-.354	-.378	-.464				2
3	-.169	-.284	-.305	-.317		-.332	-.349	-.471				3
4	-.130	-.290	-.308	-.320		-.332	-.342	-.484				4
5	-.140	-.268	-.313	-.319		-.328	-.339	-.503				5
6	-.155	-.220	-.311	-.321		-.326	-.336	-.498				6
7	-.160	-.203	-.313	-.322		-.327	-.336	-.492				7
8	-.168	-.207	-.322	-.327		-.333	-.336	-.486				8
9	-.173	-.211	-.323	-.335		-.337	-.335	-.478				9
10	-.175	-.203		-.327		-.334	-.335	-.461				10
11	-.178	-.199		-.327		-.329						11
12	-.176	-.192		-.323		-.324	-.330	-.470				12
13	-.181	-.186	-.228	-.319		-.323	-.328	-.490				13
14	-.173	-.183	-.222	-.297		-.318	-.328	-.468				14
15	-.178	-.186	-.153	-.117		-.330	-.327	-.468				15
16	-.145	-.066	-.087	-.122		-.325	-.301	-.254				16
17	1.729	1.317	1.174	.989								17
18	-.315	-.235	-.215	-.173		-.352	-.369	-.478				18
19	-.276	-.233	-.236	-.179	-.253	-.376	-.378	-.472				19
20	-.124	-.065	-.095	-.182	-.242	-.329	-.369	-.466				20
21	-.047	.044	.041	-.255	-.329	-.279	-.308	-.452				21
22	-.029	.026	.014	-.227	-.351	-.207	-.205	-.411				22
					α= 12		δ= -10.0					
1	.975	.239	.179	.192		.659	.007	.875				1
2	-.085	-.295	-.318	-.338		-.350	-.372	-.446				2
3	-.175	-.288	-.306	-.316		-.326	-.347	-.462				3
4	-.128	-.293	-.310	-.317		-.327	-.336	-.481				4
5	-.140	-.268	-.313	-.318		-.323	-.334	-.495				5
6	-.155	-.221	-.312	-.317		-.321	-.336	-.494				6
7	-.158	-.201	-.313	-.315		-.322	-.335	-.487				7
8	-.168	-.206	-.320	-.321		-.328	-.335	-.484				8
9	-.171	-.213	-.320	-.329		-.331	-.333	-.474				9
10	-.173	-.203		-.322		-.328	-.333	-.452				10
11	-.176	-.199		-.312		-.325						11
12	-.175	-.190		-.310		-.317	-.328	-.458				12
13	-.178	-.186	-.226	-.310		-.315	-.328	-.477				13
14	-.174	-.181	-.219	-.304		-.313	-.328	-.456				14
15	-.180	-.195	-.225	-.303		-.325	-.327	-.461				15
16	-.226	-.203	-.208	-.182		-.322	-.301	-.249				16
17	.126	.209	.214	.105								17
18	-.284	-.277	-.280	-.287		-.347	-.368	-.468				18
19	-.210	-.219	-.212	-.277	-.308	-.376	-.373	-.463				19
20	-.243	-.201	-.184	-.287	-.304	-.374	-.351	-.455				20
21	-.191	-.197	-.159	-.254	-.257	-.349	-.343	-.434				21
22	-.135	-.060	-.097	-.211	-.255	-.226	-.221	-.394				22

Table 14 Continued

Pressure coefficients on swept wing

Configuration 5 M=1.61 R=3.6 x 10^6

Orif	Station 1	2	3	4	24	5	6	7	8	9	10	Orif
					α= 12		δ= - 5.0					
1	.971	.239	.179	.192		.658	.007	.879				1
2	-.088	-.296	-.313	-.338		-.343	-.365	-.444				2
3	-.175	-.291	-.303	-.317		-.319	-.338	-.456				3
4	-.132	-.295	-.308	-.319		-.316	-.328	-.480				4
5	-.148	-.269	-.312	-.319		-.314	-.327	-.496				5
6	-.159	-.224	-.308	-.316		-.313	-.328	-.490				6
7	-.162	-.204	-.313	-.312		-.315	-.330	-.486				7
8	-.174	-.208	-.324	-.312		-.321	-.329	-.482				8
9	-.175	-.213	-.324	-.319		-.328	-.329	-.474				9
10	-.175	-.208		-.310		-.323	-.328	-.447				10
11	-.180	-.203		-.284		-.315						11
12	-.179	-.197		-.281		-.300	-.325	-.449				12
13	-.181	-.189	-.205	-.284		-.298	-.323	-.474				13
14	-.175	-.161	-.201	-.276		-.302	-.325	-.456				14
15	-.168	-.173	-.197	-.274		-.313	-.320	-.458				15
16	-.182	-.173	-.181	-.233		-.313	-.295	-.250				16
17	-.036	-.065	-.192	-.260								17
18	-.241	-.278	-.242	-.343		-.343	-.359	-.466				18
19	-.268	-.312	-.287	-.351	-.335	-.364	-.366	-.460				19
20	-.307	-.323	-.293	-.361	-.372	-.358	-.326	-.451				20
21	-.295	-.323	-.259	-.273	-.291	-.303	-.312	-.431				21
22	-.236	-.144	-.130	-.195	-.247	-.220	-.211	-.384				22
					α= 12		δ= 0.0					
1	.976	.243	.193	.197		.653	.021	.874				1
2	-.081	-.275	-.286	-.311		-.317	-.335	-.360				2
3	-.167	-.270	-.283	-.297		-.298	-.318	-.357				3
4	-.123	-.271	-.290	-.297		-.302	-.312	-.358				4
5	-.136	-.249	-.300	-.297		-.301	-.307	-.411				5
6	-.152	-.214	-.296	-.301		-.301	-.311	-.426				6
7	-.155	-.197	-.296	-.299		-.304	-.313	-.428				7
8	-.167	-.201	-.303	-.301		-.311	-.307	-.431				8
9	-.169	-.210	-.298	-.313		-.313	-.307	-.430				9
10	-.169	-.197		-.303		-.310	-.307	-.411				10
11	-.172	-.193		-.305		-.305						11
12	-.173	-.183		-.303		-.300	-.304	-.421				12
13	-.173	-.182	-.217	-.289		-.298	-.304	-.437				13
14	-.168	-.174	-.206	-.275		-.299	-.304	-.391				14
15	-.173	-.178	-.193	-.255		-.311	-.301	-.427				15
16	-.161	-.105	-.116	-.174		-.301	-.273	-.240				16
17	-.066	-.031	-.054	-.078								17
18	-.176	-.209	-.219	-.298		-.331	-.346	-.437				18
19	-.210	-.270	-.288	-.340	-.322	-.358	-.353	-.432				19
20	-.270	-.283	-.298	-.376	-.374	-.359	-.352	-.427				20
21	-.288	-.271	-.296	-.294	-.315	-.349	-.341	-.414				21
22	-.198	-.098	-.127	-.160	-.215	-.221	-.236	-.397				22
					α= 12		δ= 5.0					
1	.975	.232	.171	.186		.652	.003	.870				1
2	-.084	-.291	-.304	-.330		-.342	-.359	-.399				2
3	-.169	-.284	-.297	-.313		-.318	-.337	-.398				3
4	-.129	-.286	-.304	-.312		-.317	-.328	-.400				4
5	-.140	-.264	-.312	-.312		-.316	-.328	-.437				5
6	-.153	-.222	-.306	-.315		-.316	-.328	-.445				6
7	-.159	-.201	-.306	-.314		-.321	-.328	-.443				7
8	-.168	-.206	-.313	-.315		-.325	-.325	-.448				8
9	-.171	-.212	-.313	-.322		-.328	-.323	-.445				9
10	-.172	-.203		-.318		-.327	-.323	-.429				10
11	-.175	-.198		-.317		-.323						11
12	-.175	-.192		-.313		-.320	-.319	-.435				12
13	-.177	-.187	-.226	-.310		-.319	-.319	-.450				13
14	-.171	-.182	-.186	-.293		-.313	-.319	-.407				14
15	-.177	-.066	-.085	-.188		-.325	-.317	-.437				15
16	-.104	-.005	-.062	-.160		-.317	-.289	-.246				16
17	-.050	-.008	-.049	-.124								17
18	-.185	-.226	-.243	-.323		-.345	-.359	-.447				18
19	-.233	-.294	-.319	-.365	-.326	-.372	-.368	-.444				19
20	-.287	-.304	-.327	-.390	-.389	-.372	-.364	-.440				20
21	-.308	-.298	-.323	-.293	-.315	-.367	-.357	-.426				21
22	-.204	-.119	-.173	-.163	-.237	-.227	-.228	-.403				22

Table 14 Continued

Pressure coefficients on swept wing

Configuration 5 M= 1.61 R= 3.6 x 10^6

Orif	Station 1	2	3	4	24	5	6	7	8	9	10	Orif
					α= 12		δ= 10.0					
1	.973	.232	.168	.184		.650	.000	.873				1
2	-.084	-.293	-.314	-.335		-.346	-.373	-.416				2
3	-.173	-.289	-.307	-.318		-.327	-.347	-.420				3
4	-.128	-.292	-.309	-.318		-.328	-.340	-.425				4
5	-.141	-.266	-.314	-.318		-.324	-.335	-.452				5
6	-.156	-.220	-.312	-.320		-.323	-.336	-.463				6
7	-.160	-.202	-.314	-.320		-.325	-.337	-.456				7
8	-.168	-.207	-.322	-.324		-.332	-.336	-.457				8
9	-.175	-.212	-.321	-.332		-.332	-.334	-.455				9
10	-.173	-.204		-.325		-.330	-.334	-.439				10
11	-.182	-.198		-.326		-.328						11
12	-.176	-.193		-.320		-.323	-.328	-.443				12
13	-.180	-.188	-.164	-.204		-.323	-.328	-.460				13
14	-.175	-.124	-.075	-.186		-.319	-.329	-.426				14
15	-.173	.042	-.052	-.159		-.328	-.325	-.447				15
16	-.011	.087	-.043	-.195		-.314	-.294	-.247				16
17	.067	.038	-.035	-.216								17
18	-.235	-.257	-.280	-.352		-.343	-.366	-.458				18
19	-.257	-.326	-.350	-.386	-.336	-.372	-.374	-.455				19
20	-.315	-.338	-.357	-.387	-.389	-.372	-.369	-.452				20
21	-.331	-.330	-.355	-.309	-.328	-.327	-.347	-.438				21
22	-.250	-.168	-.211	-.204	-.272	-.223	-.219	-.412				22
					α= 12		δ= 20.0					
1	.976	.239	.171	.189		.655	.006	.877				1
2	-.083	-.295	-.316	-.341		-.356	-.377	-.437				2
3	-.169	-.288	-.306	-.317		-.332	-.351	-.445				3
4	-.128	-.293	-.310	-.318		-.330	-.343	-.452				4
5	-.142	-.267	-.313	-.317		-.329	-.337	-.474				5
6	-.154	-.223	-.315	-.320		-.326	-.336	-.474				6
7	-.160	-.203	-.314	-.321		-.324	-.337	-.472				7
8	-.168	-.205	-.319	-.327		-.197	-.337	-.470				8
9	-.173	-.211	-.321	-.173		-.189	-.336	-.466				9
10	-.173	-.205		-.135		-.207	-.338	-.449				10
11	-.178	-.201		-.124		-.224						11
12	-.177	-.194		-.144		-.233	-.308	-.453				12
13	-.181	-.190	-.023	-.167		-.255	-.289	-.470				13
14	-.175	.059	.007	-.173		-.270	-.283	-.443				14
15	-.037	.071	.005	-.179		-.293	-.274	-.458				15
16	.080	.281	-.153	-.251		-.300	-.255	-.248				16
17	.495	.720	.035	-.355								17
18	-.290	-.335	-.352	-.386		-.328	-.347	-.466				18
19	-.323	-.391	-.405	-.381	-.370	-.342	-.289	-.466				19
20	-.356	-.397	-.414	-.364	-.361	-.306	-.218	-.459				20
21	-.354	-.384	-.345	-.305	-.319	-.237	-.188	-.435				21
22	-.344	-.233	-.287	-.302	-.294	-.195	-.154	-.407				22
					α= 12		δ= 30.0					
1	.974	.239	.178	.191		.659	.015	.881				1
2	-.085	-.294	-.320	-.339		-.262	-.244	-.435				2
3	-.173	-.290	-.303	-.318		-.138	-.201	-.445				3
4	-.131	-.293	-.309	-.319		-.079	-.211	-.464				4
5	-.143	-.266	-.318	-.306		-.064	-.218	-.485				5
6	-.156	-.221	-.312	-.182		-.082	-.223	-.480				6
7	-.161	-.206	-.315	-.054		-.112	-.235	-.475				7
8	-.169	-.207	-.325	-.023		-.141	-.245	-.471				8
9	-.173	-.212	-.322	-.039		-.177	-.254	-.459				9
10	-.175	-.204		-.075		-.206	-.261	-.430				10
11	-.178	-.202		-.106		-.233						11
12	-.176	-.195		-.121		-.257	-.269	-.431				12
13	-.175	.024	-.006	-.094		-.276	-.264	-.469				13
14	-.037	.109	.026	-.123		-.294	-.265	-.446				14
15	.075	.132	.024	-.153		-.312	-.263	-.451				15
16	.129	.137	-.195	-.202		-.317	-.235	-.233				16
17	.166	.932	.267	-.361								17
18	-.284	-.400	-.387	-.358		-.328	-.312	-.460				18
19	-.391	-.431	-.393	-.344	-.365	-.332	-.289	-.452				19
20	-.405	-.429	-.372	-.337	-.346	-.313	-.255	-.425				20
21	-.411	-.415	-.357	-.319	-.320	-.282	-.223	-.389				21
22	-.388	-.316	-.338	-.349	-.300	-.208	-.131	-.336				22

Table 14 Concluded

Pressure coefficients on swept wing

Configuration 5 M=1.61 R=3.6 x 10^6

Orif	Station 1	2	3	4	24	5	6	7	8	9	10	Orif
					α= 15		δ= 0.0					
1	1.006	.096	-.049	-.036		.430	-.193	.703				1
2	-.121	-.349	-.371	-.402		-.410	-.430	-.488				2
3	-.199	-.339	-.358	-.386		-.390	-.415	-.494				3
4	-.166	-.338	-.358	-.377		-.386	-.398	-.500				4
5	-.177	-.332	-.364	-.372		-.381	-.392	-.509				5
6	-.189	-.288	-.359	-.373		-.380	-.391	-.506				6
7	-.190	-.247	-.357	-.370		-.377	-.391	-.503				7
8	-.199	-.242	-.362	-.368		-.384	-.386	-.496				8
9	-.204	-.246	-.364	-.374		-.384	-.386	-.489				9
10	-.209	-.238		-.368		-.379	-.384	-.484				10
11	-.211	-.231		-.367		-.373						11
12	-.210	-.226		-.368		-.371	-.378	-.491				12
13	-.212	-.222	-.289	-.353		-.360	-.378	-.519				13
14	-.203	-.218	-.275	-.342		-.355	-.378	-.489				14
15	-.211	-.231	-.224	-.328		-.362	-.372	-.486				15
16	-.199	-.129	-.196	-.235		-.354	-.344	-.254				16
17	.014	.062	-.034	-.058								17
18	-.182	-.212	-.279	-.340		-.376	-.402	-.489				18
19	-.253	-.260	-.300	-.337	-.347	-.395	-.406	-.487				19
20	-.246	-.255	-.299	-.315	-.343	-.377	-.350	-.483				20
21	-.272	-.212	-.284	-.284	-.291	-.290	-.280	-.464				21
22	-.182	-.053	-.156	-.168	-.264	-.262	-.253	-.436				22
					α=		δ=					
					α=		δ=					

Table 15

Pressure coefficients on swept wing

Configuration 6 M= 1.61 R=3.6 x 10^6

Orif	Station 1	2	3	4	24	5	6	7	8	9	10	Orif
					α=-15		δ= 2.9					
1	.599	.675	.646	.470		-.178	.398	-.245				1
2	.469	.595	.661	.663		.702	.728	.539				2
3	.503	.522	.605	.631		.642	.681	.434				3
4	.448	.477	.553	.572		.606	.636	.331				4
5	.422	.464	.500	.535		.561	.620	.247				5
6	.407	.465	.476	.504		.537	.598	.216				6
7	.416	.432	.450	.482		.511	.590	.197				7
8	.436	.421	.416	.461		.505	.595	.174				8
9	.431	.395	.425	.455		.510	.591	.141				9
10	.406	.411		.456		.514	.564	.120				10
11	.416	.417		.458		.519						11
12	.418	.421		.471		.512	.526	.034				12
13	.406	.422	.430	.453		.495	.491	.012				13
14	.407	.399	.398	.418		.470	.435	-.147				14
15	.397	.334	.333	.350		.347	.307	-.197				15
16	.345	.251	.234	.264		.108	-.264	-.133				16
17						-.214	-.232	-.210				17
18	.293	.236	.236	.227		.170	.062	-.087				18
19	.235	.195	.189	.154	.163	.094	.038	-.141				19
20	.239	.192	.172	.150	.166	.108	.047	-.145				20
21	.256	.221	.207	.160	.166	.137	.056	-.135				21
22	.243	.231	.250	.170	.043	.120	.077	-.129				22
					α=-12		δ=-20.0					
1	.720	.708	.728	.609		.100	.608	.122				1
2	.408	.494	.530	.530		.578	.589	.340				2
3	.405	.418	.452	.481		.487	.521	.288				3
4	.355	.355	.407	.432		.466	.475	.191				4
5	.332	.334	.361	.399		.422	.449	.134				5
6	.311	.316	.342	.362		.390	.424	.097				6
7	.302	.296	.312	.332		.374	.386	.079				7
8	.296	.277	.272	.305		.342	.392	.070				8
9	.291	.256	.273	.311		.350	.390	.053				9
10	.266	.266		.333		.353	.385	.037				10
11	.276	.278		.336		.356						11
12	.284	.285		.339		.361	.381	.128				12
13	.272	.291	.325	.332		.352	.375	.204				13
14	.276	.286	.296	.313		.339	.533	-.109				14
15	.273	.241	.243	.259		.244	.539	.053				15
16	.236	.170	.157	.208		.039	.271	.376				16
17						.018	.119	-.376				17
18	.193	.146	.147	.163		.968	1.055	.309				18
19	.158	.105	.101	.188	.431	.791	.849	.407				19
20	.149	.097	.079	.072	.371	.703	.747	.363				20
21	.129	.121	.093	-.129	.346	.659	.681	.290				21
22	.136	.121	.101	-.134	.283	.600	.547	.154				22
					α=-12		δ=-13.0					
1	.723	.711	.729	.613		.095	.606	.118				1
2	.412	.502	.533	.533		.578	.588	.341				2
3	.408	.422	.452	.486		.486	.522	.289				3
4	.357	.360	.409	.435		.465	.476	.193				4
5	.335	.338	.364	.401		.422	.449	.135				5
6	.313	.321	.345	.364		.389	.424	.097				6
7	.305	.301	.313	.334		.372	.386	.080				7
8	.299	.280	.273	.307		.343	.392	.072				8
9	.294	.260	.276	.312		.350	.393	.053				9
10	.268	.269		.332		.354	.388	.039				10
11	.278	.278		.337		.358						11
12	.288	.288		.340		.362	.383	-.024				12
13	.277	.292	.328	.334		.354	.369	-.043				13
14	.278	.290	.300	.312		.339	.337	-.141				14
15	.275	.244	.245	.259		.244	.235	-.066				15
16	.240	.174	.157	.184		.036	-.115	.209				16
17						-.197	-.072	-.310				17
18	.195	.150	.149	.160		.664	.774	.197				18
19	.152	.109	.104	.146	.280	.537	.593	.268				19
20	.150	.101	.080	.131	.253	.468	.514	.251				20
21	.153	.121	.094	-.034	.222	.435	.474	.218				21
22	.142	.124	.103	-.081	.159	.414	.414	.111				22

Table15 Continued

Pressure coefficients on swept wing

Configuration 6 M= 1.61 R=3.6 x 10^6

Orif	Station 1	2	3	4	24	5	6	7	8	9	10	Orif
					α=-12		δ= -5.5					
1	.720	.713	.732	.609		.092	.605	.110				1
2	.411	.503	.534	.533		.579	.592	.343				2
3	.407	.423	.457	.484		.488	.529	.292				3
4	.358	.362	.412	.434		.466	.481	.196				4
5	.335	.336	.364	.401		.424	.455	.138				5
6	.313	.321	.346	.364		.391	.433	.102				6
7	.305	.300	.313	.334		.374	.392	.086				7
8	.299	.280	.275	.305		.347	.398	.077				8
9	.294	.261	.275	.312		.355	.398	.057				9
10	.271	.270		.332		.358	.393	.041				10
11	.279	.279		.335		.361						11
12	.289	.287		.340		.367	.388	-.021				12
13	.278	.294	.327	.334		.358	.373	-.037				13
14	.278	.291	.300	.314		.344	.342	-.161				14
15	.276	.245	.246	.260		.246	.238	-.232				15
16	.240	.174	.154	.179		.041	-.261	-.141				16
17						-.219	-.194	-.247				17
18	.195	.150	.148	.139		.339	.327	-.005				18
19	.152	.111	.105	.114	.153	.269	.261	-.039				19
20	.150	.102	.079	.125	.145	.235	.234	-.032				20
21	.156	.122	.093	.114	.128	.216	.214	-.041				21
22	.144	.127	.101	.006	.099	.191	.192	-.059				22
					α=-12		δ=- 1.6					
1	.719	.711	.726	.609		.089	.604	.107				1
2	.410	.502	.530	.535		.580	.591	.346				2
3	.405	.421	.453	.485		.488	.529	.294				3
4	.358	.360	.409	.436		.466	.480	.198				4
5	.335	.337	.364	.401		.423	.454	.139				5
6	.313	.321	.345	.363		.390	.430	.102				6
7	.302	.300	.315	.334		.371	.393	.087				7
8	.298	.280	.274	.304		.347	.398	.078				8
9	.293	.261	.276	.313		.355	.399	.058				9
10	.270	.269		.334		.360	.393	.041				10
11	.279	.279		.337		.361						11
12	.285	.287		.340		.365	.388	-.021				12
13	.278	.292	.329	.335		.359	.372	-.039				13
14	.277	.289	.301	.312		.344	.342	-.164				14
15	.274	.243	.247	.260		.247	.238	-.235				15
16	.239	.176	.155	.180		.040	-.255	-.168				16
17						-.231	-.193	-.213				17
18	.195	.148	.150	.136		.198	.168	-.095				18
19	.151	.108	.106	.096	.102	.150	.117	-.162				19
20	.149	.098	.078	.107	.087	.133	.107	-.155				20
21	.156	.122	.093	.089	.072	.124	.098	-.165				21
22	.143	.125	.102	.120	.089	.103	.095	-.171				22
					α=-12		δ= 2.2					
1	.720	.712	.728	.611		.092	.603	.106				1
2	.409	.499	.532	.535		.582	.590	.343				2
3	.405	.420	.453	.488		.492	.527	.291				3
4	.355	.357	.408	.436		.469	.479	.194				4
5	.333	.335	.365	.404		.427	.454	.136				5
6	.311	.319	.345	.366		.394	.431	.098				6
7	.301	.299	.314	.336		.378	.392	.084				7
8	.298	.278	.274	.308		.348	.399	.075				8
9	.292	.257	.277	.316		.354	.397	.055				9
10	.268	.265		.335		.360	.394	.041				10
11	.276	.278		.340		.363						11
12	.285	.283		.344		.366	.390	-.024				12
13	.275	.292	.330	.336		.359	.372	-.038				13
14	.276	.287	.299	.317		.343	.342	-.163				14
15	.274	.243	.249	.264		.245	.238	-.237				15
16	.234	.174	.155	.181		.037	-.253	-.178				16
17						-.217	-.198	-.207				17
18	.193	.148	.151	.134		.070	.025	-.127				18
19	.150	.107	.106	.066	.060	.008	-.016	-.198				19
20	.148	.099	.080	.053	.059	.002	-.022	-.203				20
21	.152	.121	.095	.043	.039	.010	-.029	-.204				21
22	.140	.123	.104	.048	-.043	.006	-.029	-.200				22

Table 15 Continued

Pressure coefficients on swept wing

Configuration 6 M= 1.61 R=3.6 x 10^6

Orif	Station 1	2	3	4	24	5	6	7	8	9	10	Orif
					α= -12		δ= 6.1					
1	.720	.709	.727	.611		.091	.606	.102				1
2	.408	.502	.531	.534		.582	.594	.349				2
3	.405	.421	.453	.487		.492	.533	.296				3
4	.357	.360	.407	.438		.469	.484	.198				4
5	.333	.338	.365	.403		.427	.459	.141				5
6	.312	.321	.347	.367		.394	.435	.102				6
7	.302	.298	.316	.335		.377	.396	.089				7
8	.298	.279	.276	.308		.348	.403	.078				8
9	.292	.258	.278	.314		.357	.402	.058				9
10	.265	.268		.335		.361	.399	.043				10
11	.278	.277		.341		.363						11
12	.287	.286		.344		.368	.394	-.021				12
13	.276	.293	.332	.338		.361	.378	-.037				13
14	.278	.288	.302	.318		.347	.346	-.163				14
15	.273	.243	.247	.264		.248	.241	-.238				15
16	.238	.177	.157	.182		.041	-.268	-.175				16
17						-.235	-.211	-.181				17
18	.195	.149	.150	.136		-.005	-.057	-.172				18
19	.150	.109	.106	.024	.016	-.078	-.095	-.239				19
20	.149	.099	.081	.007	.021	-.084	-.103	-.245				20
21	.155	.122	.096	.004	-.009	-.075	-.108	-.246				21
22	.143	.123	.102	.001	-.067	-.072	-.104	-.238				22
					α= -12		δ= 10.1					
1	.720	.711	.731	.610		.088	.601	.098				1
2	.409	.500	.535	.532		.582	.592	.350				2
3	.405	.419	.458	.484		.492	.532	.296				3
4	.356	.359	.413	.436		.469	.483	.199				4
5	.335	.336	.366	.403		.427	.458	.139				5
6	.310	.318	.346	.365		.395	.434	.102				6
7	.303	.300	.315	.335		.378	.397	.088				7
8	.299	.280	.275	.308		.350	.402	.078				8
9	.292	.259	.278	.315		.356	.403	.058				9
10	.267	.269		.335		.361	.400	.042				10
11	.278	.280		.341		.364						11
12	.285	.287		.343		.367	.393	-.021				12
13	.276	.295	.331	.337		.360	.378	-.035				13
14	.277	.291	.303	.316		.347	.348	-.164				14
15	.274	.246	.249	.264		.248	.242	-.237				15
16	.239	.178	.157	.180		.040	-.274	-.173				16
17						-.244	-.236	-.156				17
18	.194	.151	.149	.138		-.078	-.127	-.221				18
19	.150	.110	.106	-.011	-.046	-.150	-.164	-.285				19
20	.147	.103	.081	-.029	-.026	-.159	-.173	-.294				20
21	.155	.126	.094	-.031	-.092	-.155	-.175	-.292				21
22	.142	.128	.102	-.022	-.081	-.150	-.172	-.283				22
					α= -12		δ= 18.1					
1	.719	.709	.726	.607		.085	.601	.089				1
2	.408	.499	.534	.533		.586	.594	.349				2
3	.404	.421	.454	.485		.494	.535	.296				3
4	.356	.359	.411	.437		.472	.486	.200				4
5	.332	.337	.367	.403		.429	.458	.140				5
6	.309	.321	.347	.366		.396	.436	.103				6
7	.302	.301	.316	.335		.381	.399	.091				7
8	.298	.281	.276	.310		.351	.407	.078				8
9	.292	.260	.278	.318		.359	.405	.058				9
10	.269	.268		.338		.364	.403	.042				10
11	.278	.279		.343		.366						11
12	.287	.286		.347		.372	.396	-.021				12
13	.278	.294	.333	.341		.362	.379	-.033				13
14	.278	.290	.305	.319		.349	.347	-.163				14
15	.274	.245	.248	.265		.250	.242	-.232				15
16	.236	.180	.156	.182		.042	-.260	-.151				16
17						-.231	-.233	-.128				17
18	.194	.150	.152	.144		-.202	-.251	-.296				18
19	.152	.110	.106	-.058	-.182	-.278	-.285	-.355				19
20	.149	.102	.082	-.089	-.162	-.285	-.291	-.365				20
21	.156	.125	.096	-.085	-.256	-.282	-.294	-.354				21
22	.144	.127	.104	-.071	-.167	-.279	-.291	-.345				22

Table 15 Continued

Pressure coefficients on swept wing

Configuration 6 M= 1.61 R=3.6 x 10^6

Orif	Station 1	2	3	4	24	5	6	7	8	9	10	Orif
					α= -12		δ= 26.5					
1	.720	.709	.727	.608		.083	.596	.082				1
2	.410	.501	.533	.535		.586	.596	.349				2
3	.404	.421	.455	.491		.495	.536	.299				3
4	.356	.359	.411	.440		.475	.489	.202				4
5	.335	.337	.369	.406		.432	.461	.144				5
6	.311	.320	.349	.369		.397	.437	.105				6
7	.303	.300	.319	.339		.384	.401	.092				7
8	.298	.279	.277	.311		.351	.407	.080				8
9	.294	.260	.280	.318		.361	.407	.060				9
10	.269	.268		.338		.364	.402	.045				10
11	.279	.278		.343		.368						11
12	.287	.286		.348		.371	.396	-.020				12
13	.278	.294	.335	.341		.364	.380	-.032				13
14	.278	.291	.307	.321		.350	.346	-.158				14
15	.275	.246	.250	.266		.250	.241	-.226				15
16	.239	.182	.157	.181		.041	-.230	-.134				16
17						-.196	-.187	-.138				17
18	.196	.150	.153	.154		-.297	-.338	-.361				18
19	.154	.109	.107	-.068	-.273	-.362	-.365	-.404				19
20	.149	.101	.083	-.108	-.292	-.367	-.373	-.392				20
21	.157	.124	.096	-.102	-.340	-.366	-.372	-.377				21
22	.144	.126	.105	-.087	-.270	-.374	-.353	-.363				22
					α= - 9		δ= 1.6					
1	.784	.732	.763	.684		.312	.713	.412				1
2	.386	.408	.452	.464		.489	.513	.292				2
3	.319	.330	.363	.388		.390	.435	.208				3
4	.279	.278	.321	.344		.379	.387	.117				4
5	.258	.254	.280	.320		.343	.356	.054				5
6	.237	.240	.265	.287		.307	.326	.026				6
7	.229	.226	.248	.259		.284	.281	.003				7
8	.220	.203	.198	.226			.271	-.005				8
9	.220	.186	.197	.209			.273	-.013				9
10	.194	.192		.229		.247	.268	-.027				10
11	.203	.203		.230		.250						11
12	.212	.208		.241		.255	.277	-.063				12
13	.203	.212	.228	.237		.252	.269	-.076				13
14	.201	.202	.214	.225		.251	.257	-.167				14
15	.191	.162	.166	.180		.171	.181	-.230				15
16	.156	.107	.083	.108		-.010	-.173	-.171				16
17						-.122	-.136	-.244				17
18	.113	.075	.080	.069		.074	.023	-.103				18
19	.083	.033	.033	.009	.019	-.015	-.022	-.165				19
20	.070	.020	.007	.003	.023	-.026	-.036	-.180				20
21	.053	.038	.014	-.018	.001	-.022	-.048	-.182				21
22	.057	.044	.021	.000	-.033	-.027	-.051	-.178				22
					α= 6		δ=-22.4					
1	.815	.724	.765	.716		.534	.742	.704				1
2	.251	.329	.361	.384		.392	.401	.216				2
3	.241	.230	.256	.274		.261	.322	.106				3
4	.204	.196	.221	.241		.272	.280	.050				4
5	.184	.171	.193	.220		.241	.253	.000				5
6	.164	.160	.178	.197		.222	.231	-.016				6
7	.157	.153	.166	.177		.197	.200	-.034				7
8	.149	.131	.125	.147		.157	.176	-.052				8
9	.149	.118	.116	.126		.142	.165	-.060				9
10	.127	.118		.134		.143	.156	-.074				10
11	.133	.132		.136		.145						11
12	.140	.132		.149		.150	.163	-.073				12
13	.133	.137	.144	.148		.154	.160	.017				13
14	.132	.131	.139	.142		.157	.157	-.132				14
15	.121	.093	.101	.108		.098	.164	.072				15
16	.099	.053	.036	.081		-.051	.165	.321				16
17						.042	.072	-.303				17
18	.056	.012	.020	.085		.752	.981	.310				18
19	.048	-.022	-.021	.048	.320	.687	.788	.567				19
20	.034	-.037	-.050	-.123	.243	.597	.659	.409				20
21	-.032	-.024	-.044	-.216	.220	.543	.586	.290				21
22	-.009	-.013	-.040	-.189	.165	.500	.476	.149				22

Table15 Continued

Pressure coefficients on swept wing

Configuration 6 M= 1.61 R= 3.6 x 10^6

Orif	Station 1	2	3	4	24	5	6	7	8	9	10	Orif
					α= - 6		δ= -14.9					
1	.815	.727	.767	.717		.528	.743	.699				1
2	.250	.330	.362	.386		.392	.405	.221				2
3	.240	.231	.258	.276		.263	.325	.112				3
4	.203	.197	.222	.241		.271	.283	.053				4
5	.186	.173	.194	.220		.241	.259	.003				5
6	.165	.160	.180	.197		.222	.234	-.014				6
7	.158	.156	.168	.178		.196	.202	-.031				7
8	.148	.132	.128	.148		.158	.178	-.050				8
9	.149	.113	.116	.126		.145	.169	-.059				9
10	.129	.120		.136		.145	.162	-.074				10
11	.135	.130		.136		.147						11
12	.141	.134		.147		.154	.167	-.071				12
13	.134	.138	.146	.147		.156	.164	-.104				13
14	.132	.132	.141	.142		.160	.162	-.119				14
15	.122	.094	.103	.108		.102	.110	-.147				15
16	.098	.055	.035	.052		-.054	-.117	.082				16
17						-.054	-.033	-.270				17
18	.059	.016	.021	.023		.549	.603	.190				18
19	.048	-.020	-.019	.012	.164	.423	.487	.230				19
20	.029	-.034	-.046	-.028	.115	.367	.418	.206				20
21	-.024	-.020	-.043	-.159	.087	.328	.366	.145				21
22	-.005	-.009	-.038	-.170	.037	.309	.305	.060				22
					α= - 6		δ= - 7.2					
1	.817	.727	.768	.712		.526	.745	.693				1
2	.252	.331	.364	.385		.394	.408	.221				2
3	.241	.232	.259	.273		.266	.329	.114				3
4	.206	.196	.223	.241		.274	.285	.054				4
5	.187	.173	.193	.220		.240	.261	.004				5
6	.166	.160	.178	.195		.221	.237	-.015				6
7	.159	.155	.166	.179		.196	.205	-.033				7
8	.149	.134	.125	.147		.161	.182	-.050				8
9	.150	.112	.116	.124		.148	.171	-.059				9
10	.129	.120		.135		.147	.163	-.074				10
11	.135	.131		.137		.149						11
12	.142	.134		.151		.156	.171	-.073				12
13	.136	.139	.145	.149		.160	.167	-.100				13
14	.135	.131	.141	.143		.163	.164	-.123				14
15	.122	.095	.103	.109		.104	.113	-.246				15
16	.099	.056	.032	.046		-.055	-.154	-.157				16
17						-.100	-.106	-.235				17
18	.060	.017	.020	.015		.250	.227	.060				18
19	.049	-.021	-.021	-.011	.036	.162	.155	-.040				19
20	.028	-.036	-.049	-.013	.021	.137	.134	-.068				20
21	-.022	-.021	-.045	-.028	-.013	.121	.114	-.084				21
22	-.005	-.010	-.039	-.118	-.043	.106	.102	-.106				22
					α= - 6		δ= - 3.3					
1	.816	.728	.767	.717		.528	.743	.689				1
2	.250	.332	.362	.388		.397	.410	.220				2
3	.238	.231	.260	.278		.267	.331	.116				3
4	.206	.197	.221	.244		.277	.285	.055				4
5	.186	.173	.195	.223		.247	.261	.003				5
6	.165	.162	.181	.200		.227	.235	-.018				6
7	.159	.156	.169	.180		.201	.207	-.034				7
8	.149	.130	.129	.150		.162	.182	-.050				8
9	.149	.115	.118	.131		.149	.173	-.060				9
10	.130	.119		.137		.149	.163	-.074				10
11	.135	.131		.140		.151						11
12	.141	.134		.152		.158	.171	-.072				12
13	.136	.138	.148	.150		.160	.167	-.098				13
14	.136	.132	.143	.147		.164	.164	-.126				14
15	.122	.096	.105	.113		.104	.115	-.240				15
16	.096	.057	.035	.047		-.054	-.152	-.169				16
17						-.090	-.109	-.198				17
18	.059	.018	.021	.014		.078	.084	-.059				18
19	.049	-.021	-.021	-.023	-.036	.037	.013	-.165				19
20	.027	-.036	-.043	-.023	-.059	.018	-.001	-.174				20
21	-.021	-.020	-.041	-.036	-.088	.016	-.018	-.188				21
22	-.003	-.010	-.038	-.049	-.082	.016	-.019	-.197				22

Table15 Continued

Pressure coefficients on swept wing

Configuration 6 M= 1.61 R=3.6 x 10^6

Orif	Station 1	2	3	4	24	5	6	7	8	9	10	Orif
					α= - 6		δ= 0.5					
1	.815	.723	.765	.716		.523	.742	.689				1
2	.247	.327	.360	.384		.395	.408	.220				2
3	.235	.228	.255	.277		.265	.331	.112				3
4	.202	.193	.220	.241		.273	.286	.053				4
5	.182	.170	.193	.220		.244	.262	.003				5
6	.161	.160	.178	.198		.224	.237	-.016				6
7	.155	.150	.166	.179		.199	.205	-.032				7
8	.147	.128	.126	.147		.161	.182	-.050				8
9	.146	.110	.115	.126		.146	.170	-.055				9
10	.122	.118		.135		.147	.163	-.074				10
11	.134	.127		.136		.150						11
12	.140	.130		.150		.156	.171	-.072				12
13	.132	.136	.144	.150		.160	.167	-.092				13
14	.131	.128	.139	.143		.164	.164	-.108				14
15	.120	.093	.103	.110		.102	.110	-.220				15
16	.091	.054	.030	.041		-.057	-.152	-.153				16
17						-.109	-.109	-.178				17
18	.059	.014	.017	.007		.015	-.009	-.081				18
19	.044	-.021	-.021	-.039	-.054	-.051	-.066	-.181				19
20	.025	-.040	-.049	-.046	-.055	-.066	-.076	-.189				20
21	-.028	-.022	-.045	-.063	-.077	-.060	-.091	-.192				21
22	-.006	-.013	-.041	-.040	-.063	-.065	-.096	-.195				22
					α= - 6		δ= 4.4					
1	.813	.725	.768	.713		.520	.743	.686				1
2	.248	.330	.364	.385		.395	.411	.221				2
3	.236	.231	.259	.278		.267	.330	.115				3
4	.202	.197	.224	.243		.274	.288	.054				4
5	.183	.172	.193	.222		.245	.263	.004				5
6	.163	.160	.180	.201		.223	.237	-.017				6
7	.155	.153	.167	.181		.199	.206	-.032				7
8	.148	.131	.126	.150		.162	.184	-.051				8
9	.147	.114	.118	.126		.149	.173	-.059				9
10	.126	.120		.137		.150	.163	-.074				10
11	.134	.130		.139		.150						11
12	.139	.133		.152		.159	.172	-.074				12
13	.134	.138	.148	.152		.162	.166	-.095				13
14	.132	.131	.143	.146		.165	.164	-.124				14
15	.121	.094	.104	.110		.104	.111	-.243				15
16	.092	.058	.032	.040		-.055	-.152	-.178				16
17						-.107	-.105	-.188				17
18	.058	.016	.021	.009		-.053	-.095	-.129				18
19	.045	-.020	-.021	-.071	-.078	-.136	-.145	-.221				19
20	.026	-.037	-.047	-.083	-.072	-.146	-.152	-.223				20
21	-.022	-.021	-.044	-.096	-.100	-.142	-.162	-.217				21
22	-.004	-.012	-.040	-.094	-.140	-.141	-.166	-.217				22
					α= - 6		δ= 8.3					
1	.814	.726	.769	.713		.517	.743	.681				1
2	.248	.332	.364	.386		.392	.413	.223				2
3	.237	.231	.261	.278		.267	.330	.118				3
4	.204	.196	.225	.242		.275	.289	.057				4
5	.182	.174	.194	.221		.242	.262	.006				5
6	.163	.162	.178	.200		.224	.238	-.015				6
7	.156	.155	.168	.181		.199	.208	-.033				7
8	.147	.133	.126	.148		.163	.185	-.050				8
9	.147	.113	.117	.129		.150	.175	-.059				9
10	.128	.121		.137		.150	.164	-.072				10
11	.136	.132		.140		.151						11
12	.141	.135		.154		.157	.174	-.070				12
13	.134	.139	.148	.152		.161	.169	-.096				13
14	.134	.134	.143	.146		.164	.168	-.126				14
15	.123	.097	.105	.112		.105	.113	-.245				15
16	.093	.060	.033	.042		-.054	-.122	-.171				16
17						-.097	-.090	-.160				17
18	.057	.020	.021	.015		-.127	-.165	-.194				18
19	.046	-.018	-.021	-.095	-.117	-.207	-.211	-.267				19
20	.026	-.035	-.047	-.116	-.110	-.217	-.219	-.255				20
21	-.021	-.020	-.044	-.125	-.150	-.209	-.225	-.234				21
22	-.003	-.010	-.038	-.127	-.181	-.214	-.228	-.234				22

Table15 Continued

Pressure coefficients on swept wing

Configuration 6 M= 1.61 R=3.6 x 10^6

Orif	Station 1	2	3	4	24	5	6	7	8	9	10	Orif
					α= - 6		δ= 16.1					
1	.815	.725	.769	.715		.519	.742	.678				1
2	.251	.332	.365	.389		.400	.414	.224				2
3	.238	.231	.261	.279		.270	.335	.121				3
4	.204	.198	.226	.243		.279	.292	.057				4
5	.186	.174	.197	.222		.250	.264	.006				5
6	.164	.162	.182	.203		.229	.242	-.016				6
7	.158	.155	.170	.184		.204	.208	-.033				7
8	.150	.134	.128	.152		.164	.187	-.049				8
9	.148	.114	.120	.130		.152	.177	-.058				9
10	.130	.121		.141		.152	.170	-.073				10
11	.137	.133		.144		.153						11
12	.141	.136		.156		.161	.178	-.073				12
13	.136	.141	.150	.154		.163	.174	-.097				13
14	.135	.134	.146	.149		.167	.169	-.128				14
15	.124	.097	.107	.113		.107	.117	-.243				15
16	.094	.064	.036	.048		-.038	-.058	-.152				16
17						-.041	-.039	-.133				17
18	.061	.019	.024	.026		-.231	-.275	-.269				18
19	.048	-.017	-.019	-.124	-.170	-.310	-.310	-.309				19
20	.028	-.035	-.045	-.160	-.206	-.315	-.316	-.288				20
21	-.021	-.018	-.042	-.167	-.230	-.311	-.319	-.262				21
22	.000	-.007	-.036	-.153	-.251	-.321	-.318	-.261				22
					α= - 6		δ= 23.9					
1	.816	.727	.770	.717		.517	.743	.672				1
2	.251	.332	.367	.390		.403	.418	.230				2
3	.238	.232	.262	.281		.274	.338	.126				3
4	.204	.199	.229	.246		.280	.294	.062				4
5	.188	.173	.197	.226		.252	.270	.009				5
6	.165	.162	.181	.205		.231	.246	-.013				6
7	.157	.156	.170	.185		.207	.212	-.030				7
8	.149	.135	.128	.154		.165	.191	-.047				8
9	.147	.115	.121	.132		.153	.179	-.054				9
10	.132	.122		.140		.154	.172	-.071				10
11	.136	.134		.145		.155						11
12	.142	.136		.158		.162	.182	-.071				12
13	.136	.141	.151	.158		.164	.179	-.093				13
14	.136	.136	.146	.150		.169	.175	-.110				14
15	.124	.099	.107	.116		.110	.121	-.201				15
16	.096	.066	.034	.068		-.002	.036	-.099				16
17						.025	.036	-.101				17
18	.060	.021	.023	.032		-.320	-.356	-.342				18
19	.047	-.016	-.017	-.137	-.269	-.386	-.383	-.344				19
20	.029	-.034	-.043	-.185	-.287	-.390	-.390	-.338				20
21	-.020	-.016	-.041	-.184	-.316	-.387	-.387	-.325				21
22	-.001	-.006	-.037	-.165	-.324	-.396	-.335	-.323				22
					α= - 3		δ= 0.3					
1	.849	.725	.751	.737		.692	.737	.838				1
2	.160	.189	.227	.250		.265	.253	.117				2
3	.138	.109	.101	.126		.118	.159	-.035				3
4	.116	.089	.111	.123		.138	.149	.002				4
5	.099	.076	.088	.100		.117	.127	-.010				5
6	.079	.067	.074	.081		.096	.108	-.024				6
7	.071	.064	.064	.069		.081	.086	-.027				7
8	.066	.047	.037	.045		.056	.064	-.047				8
9	.059	.028	.026	.030		.043	.054	-.043				9
10	.054	.034		.031		.040	.041	-.070				10
11	.051	.044		.034		.041						11
12	.053	.049		.043		.046	.050	-.075				12
13	.062	.054	.054	.045		.042	.047	-.119				13
14	.056	.049	.054	.045		.054	.048	.001				14
15	.044	.017	.025	.018		.009	.012	-.178				15
16	.015	-.007	-.036	-.039		-.097	-.075	-.052				16
17						-.107	-.067	-.117				17
18	-.018	-.054	-.050	-.067		-.075	-.073	-.139				18
19	-.032	-.090	-.090	-.107	-.136	-.113	-.132	-.217				19
20	-.032	-.106	-.109	-.113	-.146	-.128	-.141	-.203				20
21	-.093	-.093	-.107	-.121	-.157	-.123	-.146	-.219				21
22	-.069	-.069	-.107	-.097	-.142	-.123	-.144	-.235				22

Table15 Continued

Pressure coefficients on swept wing

Configuration 6 M= 1.61 R=3.6 x 10^6

Orif	Station 1	2	3	4	24	5	6	7	8	9	10	Orif
					α= 0	δ= -22.7						
1	.871	.828	.741	.703		.737	.619	.854				1
2	.114	.093	.123	.145		.170	.164	.090				2
3	.076	.042	.050	.078		.071	.081	-.015				3
4	.064	.021	.030	.025		.030	.043	.000				4
5	.048	.011	.008	.011		.017	.022	.005				5
6	.031	.007	.004	-.004		.007	.007	-.004				6
7	.022	.007	-.006	-.009		-.004	-.009	.003				7
8	.024	-.006	-.025	-.032		-.024	-.019	-.016				8
9	.011	-.022	-.029	-.046		-.039	-.023	-.009				9
10	.006	-.019		-.036		-.037	-.036	-.030				10
11	.006	-.009		-.033		-.034						11
12	.004	.000		-.025		-.029	-.032	-.063				12
13	-.004	.003	-.011	-.022		-.029	-.034	-.045				13
14	.004	.001	-.007	-.022		-.024	-.034	.192				14
15	-.004	-.029	-.027	-.039		-.052	.105	.204				15
16	-.022	-.045	-.072	-.039		.014	.163	.302				16
17						.084	.179	-.076				17
18	-.065	-.092	-.096	-.013		.282	.362	.226				18
19	-.066	-.126	-.131	-.109	.173	.521	.576	.262				19
20	-.065	-.142	-.153	-.245	.102	.473	.566	.310				20
21	-.136	-.131	-.147	-.268	.092	.424	.524	.301				21
22	-.092	-.093	-.148	-.198	.060	.346	.449	.162				22
					α= 0	δ=-15.2						
1	.873	.828	.744	.704		.738	.625	.863				1
2	.114	.095	.123	.145		.172	.166	.089				2
3	.078	.044	.051	.081		.074	.083	-.014				3
4	.064	.026	.029	.027		.032	.044	.005				4
5	.049	.015	.007	.012		.018	.025	.007				5
6	.030	.011	.004	-.003		.008	.011	-.006				6
7	.021	.009	-.006	-.007		-.003	-.004	.001				7
8	.022	-.007	-.024	-.023		-.023	-.014	-.018				8
9	.010	-.022	-.029	-.039		-.037	-.021	-.008				9
10	.006	-.019		-.031		-.036	-.033	-.032				10
11	.005	-.009		-.031		-.032						11
12	.006	.000		-.021		-.026	-.029	-.055				12
13	-.004	.005	-.012	-.020		-.027	-.031	-.045				13
14	.004	.001	-.008	-.021		-.022	-.031	.061				14
15	-.004	-.032	-.029	-.038		-.051	-.042	.005				15
16	-.024	-.046	-.075	-.063		-.029	-.004	.139				16
17						-.007	.016	-.088				17
18	-.064	-.093	-.093	-.075		.145	.175	.147				18
19	-.065	-.124	-.128	-.114	.037	.251	.261	.130				19
20	-.069	-.140	-.150	-.169	-.014	.231	.255	.107				20
21	-.136	-.132	-.147	-.228	-.036	.207	.249	.079				21
22	-.093	-.093	-.147	-.183	-.064	.185	.224	.013				22
					α= 0	δ=- 7.6						
1	.870	.831	.739	.707		.736	.633	.862				1
2	.113	.094	.125	.150		.175	.172	.091				2
3	.076	.043	.050	.083		.074	.087	-.014				3
4	.063	.024	.030	.032		.034	.050	.004				4
5	.050	.011	.009	.018		.019	.032	.008				5
6	.030	.010	.006	.001		.012	.018	-.007				6
7	.022	.008	.000	-.008		.001	.003	.005				7
8	.021	-.005	-.020	-.021		-.020	-.011	-.018				8
9	.010	-.023	-.026	-.036		-.035	-.015	-.008				9
10	.007	-.020		-.030		-.033	-.026	-.032				10
11	.004	-.011		-.029		-.030						11
12	.006	-.003		-.020		-.025	-.023	-.053				12
13	-.007	.005	-.007	-.018		-.025	-.023	-.043				13
14	.004	-.003	-.003	-.016		-.021	-.025	.069				14
15	-.007	-.031	-.024	-.035		-.050	-.042	-.055				15
16	-.030	-.042	-.074	-.067		-.081	-.052	.042				16
17						-.059	-.049	-.119				17
18	-.063	-.094	-.091	-.108		.023	.024	.004				18
19	-.066	-.128	-.125	-.119	-.078	.021	.004	-.021				19
20	-.068	-.144	-.147	-.132	-.100	.012	-.003	-.033				20
21	-.134	-.134	-.143	-.148	-.121	.008	-.005	-.056				21
22	-.094	-.095	-.143	-.152	-.133	.005	-.001	-.108				22

Table 15 Continued

Pressure coefficients on swept wing

Configuration 6 M= 1.61 R= 3.6 x 10^6

Orif	Station 1	2	3	4	24	5	6	7	8	9	10	Orif
					α= 0		δ= - 3.8					
1	.872	.829	.744	.710		.739	.631	.861				1
2	.114	.096	.126	.151		.182	.173	.088				2
3	.078	.045	.052	.081		.077	.085	-.017				3
4	.065	.024	.030	.033		.038	.049	.004				4
5	.048	.014	.011	.020		.022	.029	.007				5
6	.031	.011	.010	.004		.016	.014	-.007				6
7	.024	.011	.002	-.002		.005	-.001	.000				7
8	.022	-.004	-.017	-.020		-.018	-.013	-.022				8
9	.009	-.021	-.025	-.035		-.034	-.017	-.011				9
10	.007	-.016		-.027		-.030	-.029	-.033				10
11	.006	-.007		-.028		-.025						11
12	.007	.002		-.015		-.021	-.027	-.050				12
13	.001	.005	-.004	-.017		-.021	-.028	-.040				13
14	.007	.003	-.001	-.018		-.017	-.028	.069				14
15	-.002	-.027	-.023	-.033		-.050	-.047	-.061				15
16	-.030	-.039	-.071	-.073		-.097	-.062	.011				16
17						-.055	-.061	-.091				17
18	-.064	-.093	-.091	-.110		-.064	-.055	-.075				18
19	-.068	-.124	-.124	-.122	-.132	-.076	-.099	-.089				19
20	-.068	-.142	-.147	-.136	-.157	-.092	-.105	-.098				20
21	-.133	-.129	-.143	-.145	-.167	-.088	-.108	-.123				21
22	-.092	-.093	-.144	-.135	-.171	-.087	-.105	-.163				22
					α= 0		δ= 0.0					
1	.871	.832	.744	.708		.737	.637	.864				1
2	.116	.095	.128	.151		.179	.172	.092				2
3	.077	.042	.055	.087		.078	.087	-.014				3
4	.064	.023	.032	.033		.038	.050	.007				4
5	.048	.016	.010	.020		.022	.032	.008				5
6	.031	.009	.006	.003		.017	.016	-.005				6
7	.023	.009	.000	-.005		.004	.002	.005				7
8	.024	-.003	-.021	-.017		-.020	-.010	-.014				8
9	.010	-.020	-.026	-.033		-.032	-.014	-.006				9
10	.008	-.016		-.029		-.030	-.028	-.027				10
11	.005	-.006		-.028		-.025						11
12	.004	.000		-.016		-.021	-.024	-.046				12
13	.002	.007	-.006	-.017		-.022	-.026	-.040				13
14	.007	.004	-.004	-.012		-.018	-.026	.071				14
15	-.005	-.028	-.026	-.031		-.047	-.042	-.064				15
16	-.032	-.036	-.075	-.069		-.098	-.057	.001				16
17						-.077	-.057	-.070				17
18	-.062	-.092	-.094	-.107		-.093	-.120	-.122				18
19	-.066	-.124	-.124	-.131	-.132	-.148	-.164	-.121				19
20	-.066	-.140	-.150	-.148	-.144	-.164	-.174	-.146				20
21	-.132	-.130	-.144	-.154	-.151	-.159	-.174	-.164				21
22	-.091	-.092	-.143	-.135	-.143	-.149	-.167	-.165				22
					α= 0		δ= 3.9					
1	.872	.829	.747	.707		.736	.635	.862				1
2	.113	.094	.128	.150		.180	.173	.089				2
3	.075	.042	.053	.082		.077	.085	-.017				3
4	.064	.024	.033	.031		.039	.049	.005				4
5	.048	.013	.011	.017		.023	.033	.007				5
6	.033	.010	.007	.002		.014	.018	-.007				6
7	.023	.009	-.001	-.005		.003	.002	.002				7
8	.023	-.006	-.021	-.021		-.020	-.009	-.016				8
9	.009	-.021	-.029	-.037		-.031	-.016	-.008				9
10	.007	-.016		-.030		-.029	-.029	-.031				10
11	.004	-.007		-.031		-.025						11
12	.003	.001		-.021		-.020	-.026	-.048				12
13	.007	.006	-.010	-.018		-.021	-.027	-.038				13
14	.008	.004	-.005	-.019		-.016	-.027	.070				14
15	-.005	-.025	-.027	-.036		-.046	-.044	-.065				15
16	-.034	-.038	-.078	-.066		-.081	-.049	.003				16
17						-.063	-.045	-.045				17
18	-.063	-.088	-.094	-.105		-.143	-.183	-.163				18
19	-.070	-.122	-.127	-.144	-.140	-.215	-.227	-.171				19
20	-.070	-.139	-.150	-.174	-.171	-.227	-.234	-.223				20
21	-.129	-.128	-.147	-.175	-.170	-.221	-.235	-.233				21
22	-.090	-.092	-.145	-.152	-.173	-.214	-.230	-.227				22

Table 15 Continued

Pressure coefficients on swept wing

Configuration 6 M= 1.61 R=3.6 x 10^6

Orif	Station 1	2	3	4	24	5	6	7	8	9	10	Orif
					α= 0		δ= 7.7					
1	.875	.833	.745	.711		.736	.640	.863				1
2	.116	.099	.130	.154		.183	.177	.090				2
3	.079	.047	.055	.085		.079	.091	-.016				3
4	.065	.028	.036	.036		.039	.055	.005				4
5	.050	.016	.013	.019		.024	.036	.008				5
6	.035	.013	.012	.007		.018	.021	-.008				6
7	.025	.012	.002	-.001		.006	.007	.001				7
8	.024	-.003	-.019	-.017		-.013	-.006	-.018				8
9	.011	-.018	-.023	-.032		-.028	-.010	-.009				9
10	.007	-.013		-.024		-.028	-.023	-.030				10
11	.007	-.005		-.025		-.024						11
12	.006	.003		-.014		-.018	-.021	-.049				12
13	.010	.009	-.004	-.014		-.021	-.021	-.039				13
14	.008	.003	-.001	-.014		-.014	-.023	.071				14
15	-.001	-.023	-.022	-.032		-.044	-.038	-.063				15
16	-.030	-.035	-.075	-.063		-.048	-.027	.009				16
17						-.032	-.023	-.021				17
18	-.058	-.087	-.092	-.090		-.194	-.235	-.200				18
19	-.067	-.119	-.124	-.152	-.156	-.270	-.279	-.221				19
20	-.067	-.138	-.148	-.191	-.207	-.278	-.283	-.286				20
21	-.126	-.128	-.142	-.193	-.201	-.275	-.285	-.294				21
22	-.089	-.092	-.141	-.163	-.218	-.272	-.268	-.288				22
					α= 0		δ= 15.4					
1	.874	.831	.744	.709		.730	.645	.863				1
2	.117	.099	.131	.152		.182	.178	.091				2
3	.079	.045	.056	.086		.078	.089	-.017				3
4	.064	.028	.035	.035		.040	.051	.008				4
5	.050	.017	.011	.020		.021	.035	.008				5
6	.034	.013	.007	.005		.021	.018	-.003				6
7	.026	.013	-.001	-.002		.007	.005	.003				7
8	.026	-.002	-.022	-.018		-.018	-.007	-.015				8
9	.015	-.019	-.025	-.033		-.031	-.012	-.008				9
10	.010	-.015		-.027		-.029	-.026	-.029				10
11	.008	-.003		-.026		-.023						11
12	.009	.004		-.016		-.021	-.019	-.044				12
13	.011	.010	-.007	-.016		-.021	-.023	-.039				13
14	.011	.004	-.003	-.016		-.014	-.023	.070				14
15	.002	-.022	-.022	-.034		-.044	-.017	-.045				15
16	-.031	-.033	-.074	-.050		-.005	.066	.046				16
17						.019	.075	.005				17
18	-.061	-.089	-.093	-.065		-.281	-.320	-.266				18
19	-.070	-.121	-.127	-.191	-.261	-.351	-.355	-.340				19
20	-.068	-.137	-.150	-.235	-.270	-.357	-.363	-.378				20
21	-.125	-.127	-.145	-.223	-.257	-.359	-.364	-.374				21
22	-.090	-.091	-.142	-.185	-.302	-.350	-.268	-.379				22
					α= 0		δ= 23.1					
1	.872	.832	.743	.712		.736	.649	.863				1
2	.116	.097	.130	.156		.182	.181	.093				2
3	.080	.047	.054	.085		.080	.093	-.017				3
4	.067	.029	.033	.038		.043	.056	.009				4
5	.050	.015	.016	.024		.027	.040	.009				5
6	.033	.012	.014	.009		.021	.025	-.006				6
7	.026	.013	.007	.004		.010	.010	.003				7
8	.024	-.002	-.019	-.010		-.014	-.003	-.016				8
9	.014	-.019	-.020	-.027		-.026	-.009	-.007				9
10	.009	-.013		-.021		-.025	-.021	-.031				10
11	.006	-.004		-.023		-.021						11
12	.007	.006		-.012		-.015	-.018	-.052				12
13	.012	.008	-.002	-.011		-.016	-.018	-.041				13
14	.011	.007	.007	-.008		-.010	-.019	.057				14
15	.002	-.024	-.019	-.027		-.021	.165	.064				15
16	-.031	-.028	-.064	-.039		.114	.207	.131				16
17						.125	.212	.093				17
18	-.060	-.091	-.090	-.040		-.341	-.382	-.313				18
19	-.069	-.121	-.120	-.210	-.322	-.412	-.392	-.406				19
20	-.066	-.138	-.143	-.252	-.312	-.401	-.375	-.419				20
21	-.121	-.128	-.138	-.241	-.315	-.354	-.347	-.426				21
22	-.088	-.091	-.136	-.190	-.355	-.326	-.306	-.421				22

Table 15 Continued

Pressure coefficients on swept wing

Configuration 6 M= 1.61 R=3.6 x 10^6

Orif	Station 1	2	3	4	24	5	6	7	8	9	10	Orif
					α= 6		δ= -24.4					
1	.896	.602	.609	.533		.763	.278	.940				1
2	.005	-.146	-.163	-.177		-.186	-.194	-.164				2
3	-.060	-.141	-.157	-.161		-.171	-.184	-.163				3
4	-.051	-.121	-.172	-.178		-.178	-.188	-.175				4
5	-.064	-.124	-.180	-.180		-.188	-.197	-.175				5
6	-.077	-.120	-.179	-.190		-.184	-.195	-.178				6
7	-.083	-.110	-.162	-.195		-.194	-.198	-.215				7
8	-.091	-.120	-.164	-.204		-.207	-.207	-.266				8
9	-.096	-.130	-.167	-.219		-.213	-.209	-.319				9
10	-.098	-.126		-.209		-.214	-.217	-.345				10
11	-.102	-.121		-.204		-.210						11
12	-.103	-.110		-.184		-.207	-.211	-.341				12
13	-.103	-.106	-.131	-.169		-.209	-.210	-.334				13
14	-.099	-.107	-.129	-.162		-.199	-.094	-.237				14
15	-.104	-.129	-.141	-.169		.007	.050	-.243				15
16	-.130	-.129	-.171	-.158		.028	.061	-.083				16
17						.017	.069	-.198				17
18	-.153	-.184	-.192	-.111		.024	.070	-.131				18
19	-.166	-.209	-.216	-.209	.032	.137	.134	-.176				19
20	-.161	-.226	-.235	-.297	-.007	.212	.214	-.146				20
21	-.207	-.217	-.231	-.281	-.024	.250	.264	-.111				21
22	-.131	-.079	-.178	-.250	-.050	.248	.242	-.132				22
					α= 6		δ= -16.8					
1	.897	.607	.612	.537		.765	.278	.936				1
2	.003	-.144	-.162	-.171		-.182	-.186	-.158				2
3	-.061	-.139	-.152	-.157		-.164	-.179	-.156				3
4	-.053	-.120	-.169	-.173		-.179	-.184	-.173				4
5	-.063	-.124	-.176	-.178		-.185	-.189	-.170				5
6	-.077	-.115	-.176	-.185		-.179	-.191	-.174				6
7	-.083	-.111	-.157	-.192		-.191	-.196	-.206				7
8	-.089	-.117	-.157	-.200		-.206	-.202	-.258				8
9	-.096	-.131	-.161	-.212		-.212	-.207	-.313				9
10	-.098	-.125		-.204		-.210	-.211	-.338				10
11	-.102	-.119		-.199		-.209						11
12	-.102	-.111		-.180		-.204	-.206	-.332				12
13	-.100	-.106	-.127	-.164		-.207	-.206	-.330				13
14	-.096	-.107	-.122	-.158		-.199	-.207	-.252				14
15	-.104	-.128	-.137	-.166		-.188	-.139	-.301				15
16	-.134	-.124	-.167	-.166		-.052	-.045	-.160				16
17						-.050	-.035	-.240				17
18	-.151	-.182	-.188	-.146		-.049	-.034	-.173				18
19	-.167	-.206	-.213	-.210	-.080	.020	.015	-.283				19
20	-.163	-.223	-.232	-.241	-.117	.039	.049	-.229				20
21	-.205	-.215	-.227	-.248	-.133	.050	.069	-.215				21
22	-.131	-.078	-.173	-.262	-.139	.074	.066	-.243				22
					α=		δ=					

Table15 Continued

Pressure coefficients on swept wing

Configuration 6 M= 1.61 R=3.6 x 10^6

Orif	Station 1	2	3	4	24	5	6	7	8	9	10	Orif
					α= 6		δ= - 9.1					
1	.896	.606	.609	.535		.763	.281	.931				1
2	.002	-.146	-.164	-.174		-.182	-.188	-.156				2
3	-.058	-.142	-.155	-.158		-.165	-.179	-.152				3
4	-.052	-.120	-.172	-.177		-.178	-.186	-.177				4
5	-.061	-.124	-.178	-.180		-.183	-.190	-.173				5
6	-.078	-.116	-.178	-.188		-.182	-.192	-.172				6
7	-.083	-.110	-.162	-.194		-.190	-.197	-.203				7
8	-.088	-.120	-.164	-.203		-.202	-.206	-.255				8
9	-.097	-.131	-.164	-.214		-.212	-.206	-.302				9
10	-.099	-.123		-.207		-.209	-.211	-.335				10
11	-.102	-.118		-.199		-.205						11
12	-.101	-.110		-.180		-.202	-.206	-.327				12
13	-.103	-.107	-.130	-.166		-.203	-.207	-.327				13
14	-.099	-.107	-.125	-.157		-.198	-.207	-.249				14
15	-.106	-.126	-.143	-.170		-.214	-.199	-.305				15
16	-.134	-.124	-.172	-.182		-.140	-.113	-.176				16
17						-.106	-.097	-.255				17
18	-.152	-.179	-.190	-.184		-.148	-.152	-.238				18
19	-.169	-.205	-.216	-.191	-.158	-.141	-.156	-.327				19
20	-.164	-.223	-.235	-.246	-.185	-.137	-.148	-.268				20
21	-.204	-.216	-.233	-.250	-.197	-.128	-.136	-.256				21
22	-.135	-.078	-.180	-.266	-.185	-.123	-.122	-.257				22
					α= 6		δ= - 5.3					
1	.900	.608	.612	.539		.765	.282	.929				1
2	.005	-.144	-.160	-.171		-.178	-.184	-.151				2
3	-.056	-.139	-.152	-.154		-.161	-.177	-.147				3
4	-.050	-.118	-.169	-.173		-.175	-.181	-.171				4
5	-.061	-.121	-.178	-.175		-.181	-.186	-.167				5
6	-.078	-.115	-.174	-.184		-.178	-.186	-.166				6
7	-.081	-.109	-.158	-.189		-.188	-.193	-.193				7
8	-.087	-.117	-.158	-.199		-.205	-.200	-.244				8
9	-.094	-.128	-.160	-.212		-.207	-.203	-.294				9
10	-.095	-.123		-.203		-.209	-.209	-.330				10
11	-.102	-.117		-.197		-.206						11
12	-.098	-.110		-.177		-.201	-.207	-.323				12
13	-.098	-.103	-.126	-.161		-.203	-.203	-.321				13
14	-.094	-.104	-.122	-.155		-.197	-.205	-.246				14
15	-.102	-.126	-.136	-.164		-.213	-.196	-.289				15
16	-.130	-.121	-.169	-.177		-.151	-.121	-.168				16
17						-.103	-.102	-.251				17
18	-.151	-.180	-.187	-.188		-.193	-.196	-.315				18
19	-.167	-.205	-.212	-.187	-.182	-.206	-.216	-.363				19
20	-.164	-.222	-.231	-.254	-.213	-.205	-.209	-.324				20
21	-.203	-.214	-.227	-.271	-.219	-.195	-.203	-.340				21
22	-.134	-.080	-.178	-.221	-.207	-.184	-.186	-.335				22
					α=		δ=					

Table 15 Continued

Pressure coefficients on swept wing

Configuration 6 M= 1.61 R=3.6 x 10^6

Orif	Station 1	2	3	4	24	5	6	7	8	9	10	Orif
					α= 6		δ= 2.5					
1	.900	.607	.612	.535		.764	.284	.930				1
2	.006	-.143	-.154	-.166		-.172	-.178	-.145				2
3	-.057	-.137	-.149	-.155		-.158	-.171	-.138				3
4	-.050	-.119	-.167	-.171		-.170	-.174	-.164				4
5	-.060	-.122	-.176	-.172		-.177	-.178	-.163				5
6	-.074	-.115	-.177	-.179		-.178	-.183	-.161				6
7	-.079	-.110	-.156	-.186		-.185	-.188	-.182				7
8	-.090	-.118	-.158	-.194		-.198	-.193	-.224				8
9	-.092	-.130	-.159	-.210		-.206	-.196	-.264				9
10	-.093	-.122		-.200		-.203	-.202	-.295				10
11	-.096	-.115		-.194		-.200						11
12	-.098	-.107		-.174		-.196	-.196	-.301				12
13	-.100	-.104	-.127	-.163		-.197	-.196	-.318				13
14	-.094	-.104	-.125	-.157		-.194	-.200	-.240				14
15	-.101	-.126	-.139	-.163		-.209	-.191	-.289				15
16	-.131	-.122	-.171	-.179		-.148	-.114	-.166				16
17						-.093	-.097	-.254				17
18	-.150	-.178	-.187	-.189		-.206	-.240	-.317				18
19	-.165	-.205	-.215	-.211	-.181	-.264	-.265	-.340				19
20	-.164	-.221	-.230	-.263	-.207	-.265	-.263	-.331				20
21	-.203	-.212	-.228	-.266	-.207	-.257	-.258	-.347				21
22	-.133	-.081	-.177	-.202	-.192	-.251	-.225	-.349				22
					α= 6		δ= 6.4					
1	.898	.607	.612	.538		.763	.283	.922				1
2	.001	-.147	-.162	-.176		-.180	-.182	-.146				2
3	-.060	-.140	-.154	-.156		-.164	-.174	-.141				3
4	-.053	-.121	-.170	-.173		-.177	-.180	-.169				4
5	-.063	-.123	-.178	-.177		-.184	-.184	-.171				5
6	-.078	-.114	-.178	-.184		-.181	-.186	-.167				6
7	-.082	-.108	-.161	-.190		-.191	-.193	-.188				7
8	-.093	-.117	-.162	-.199		-.203	-.199	-.233				8
9	-.099	-.130	-.163	-.214		-.211	-.202	-.281				9
10	-.097	-.122		-.206		-.207	-.207	-.321				10
11	-.100	-.118		-.199		-.206						11
12	-.101	-.107		-.178		-.203	-.203	-.318				12
13	-.101	-.105	-.132	-.164		-.204	-.201	-.320				13
14	-.096	-.104	-.124	-.158		-.197	-.205	-.245				14
15	-.104	-.129	-.139	-.167		-.211	-.184	-.291				15
16	-.132	-.122	-.172	-.172		-.117	-.091	-.161				16
17						-.075	-.070	-.258				17
18	-.151	-.178	-.188	-.177		-.317	-.334	-.369				18
19	-.167	-.204	-.216	-.273	-.300	-.368	-.371	-.367				19
20	-.165	-.221	-.233	-.279	-.299	-.375	-.372	-.303				20
21	-.202	-.215	-.231	-.276	-.299	-.368	-.367	-.403				21
22	-.133	-.079	-.178	-.223	-.312	-.235	-.220	-.403				22
					α= 6		δ= 14.3					
1	.899	.607	.612	.540		.763	.286	.920				1
2	.004	-.145	-.158	-.172		-.179	-.182	-.144				2
3	-.059	-.141	-.150	-.156		-.162	-.171	-.136				3
4	-.053	-.121	-.168	-.174		-.176	-.178	-.164				4
5	-.064	-.124	-.176	-.177		-.181	-.185	-.170				5
6	-.076	-.116	-.175	-.183		-.181	-.185	-.163				6
7	-.081	-.111	-.159	-.190		-.190	-.192	-.178				7
8	-.091	-.118	-.160	-.198		-.199	-.201	-.218				8
9	-.096	-.130	-.163	-.212		-.207	-.202	-.263				9
10	-.095	-.122		-.205		-.207	-.207	-.308				10
11	-.102	-.119		-.198		-.203						11
12	-.100	-.108		-.174		-.199	-.203	-.310				12
13	-.099	-.105	-.128	-.163		-.202	-.203	-.315				13
14	-.096	-.106	-.125	-.155		-.194	-.206	-.236				14
15	-.101	-.125	-.140	-.164		-.193	-.059	-.248				15
16	-.133	-.121	-.168	-.164		-.053	-.005	-.116				16
17						.018	.022	-.232				17
18	-.152	-.176	-.189	-.159		-.361	-.390	-.406				18
19	-.167	-.205	-.213	-.273	-.335	-.412	-.384	-.390				19
20	-.166	-.221	-.231	-.310	-.333	-.384	-.341	-.418				20
21	-.202	-.214	-.229	-.283	-.315	-.332	-.308	-.428				21
22	-.133	-.083	-.178	-.213	-.367	-.296	-.292	-.392				22

Table15 Continued

Pressure coefficients on swept wing

Configuration 6 M= 1.61 R=3.6 x 10^6

Orif	Station 1	2	3	4	24	5	6	7	8	9	10	Orif
					α= 6		δ= 22.1					
1	.899	.610	.615	.543		.763	.292	.920				1
2	.003	-.140	-.159	-.169		-.175	-.176	-.134				2
3	-.060	-.137	-.150	-.154		-.156	-.166	-.131				3
4	-.049	-.119	-.164	-.169		-.169	-.175	-.158				4
5	-.062	-.121	-.176	-.173		-.177	-.178	-.165				5
6	-.076	-.112	-.175	-.180		-.177	-.178	-.158				6
7	-.081	-.107	-.158	-.187		-.184	-.187	-.171				7
8	-.091	-.114	-.158	-.196		-.200	-.195	-.207				8
9	-.096	-.126	-.160	-.207		-.207	-.195	-.250				9
10	-.095	-.121		-.201		-.207	-.203	-.296				10
11	-.100	-.115		-.194		-.203						11
12	-.098	-.109		-.172		-.199	-.195	-.308				12
13	-.098	-.102	-.126	-.159		-.202	-.197	-.303				13
14	-.094	-.102	-.123	-.154		-.195	-.199	-.196				14
15	-.100	-.122	-.137	-.163		-.121	.023	-.183				15
16	-.129	-.117	-.167	-.164		-.007	.047	-.075				16
17						.042	.065	-.192				17
18	-.148	-.174	-.187	-.149		-.390	-.411	-.438				18
19	-.164	-.201	-.211	-.276	-.351	-.423	-.376	-.420				19
20	-.163	-.219	-.230	-.318	-.351	-.377	-.339	-.442				20
21	-.197	-.211	-.228	-.287	-.333	-.350	-.326	-.429				21
22	-.128	-.076	-.177	-.209	-.386	-.313	-.318	-.390				22
					α= 9		δ= - 2.2					
1	.941	.413	.435	.367		.743	.142	.986				1
2	-.048	-.220	-.233	-.253		-.259	-.276	-.271				2
3	-.109	-.218	-.229	-.240		-.244	-.263	-.264				3
4	-.094	-.209	-.240	-.244		-.251	-.253	-.276				4
5	-.103	-.169	-.250	-.246		-.251	-.257	-.341				5
6	-.117	-.167	-.247	-.252		-.253	-.262	-.350				6
7	-.121	-.156	-.246	-.251		-.255	-.264	-.359				7
8	-.131	-.163	-.251	-.254		-.263	-.260	-.374				8
9	-.137	-.174	-.235	-.267		-.269	-.266	-.388				9
10	-.136	-.164		-.258		-.266	-.272	-.380				10
11	-.139	-.157		-.261		-.264						11
12	-.139	-.150		-.257		-.259	-.261	-.378				12
13	-.142	-.146	-.175	-.253		-.261	-.264	-.387				13
14	-.136	-.142	-.167	-.242		-.257	-.258	-.312				14
15	-.139	-.162	-.181	-.242		-.260	-.224	-.344				15
16	-.167	-.157	-.207	-.245		-.174	-.147	-.212				16
17						-.100	-.125	-.307				17
18	-.186	-.210	-.225	-.224		-.205	-.252	-.311				18
19	-.199	-.235	-.249	-.284	-.190	-.276	-.257	-.332				19
20	-.203	-.250	-.257	-.303	-.190	-.270	-.251	-.327				20
21	-.237	-.245	-.247	-.300	-.190	-.264	-.242	-.307				21
22	-.164	-.081	-.139	-.164	-.164	-.249	-.188	-.284				22
					α= 12		δ= -26.6					
1	.976	.233	.201	.186		.646	-.007	.877				1
2	-.091	-.298	-.319	-.344		-.358	-.388	-.464				2
3	-.149	-.291	-.307	-.322		-.333	-.361	-.483				3
4	-.135	-.294	-.311	-.323		-.334	-.348	-.498				4
5	-.145	-.269	-.317	-.325		-.331	-.345	-.510				5
6	-.158	-.220	-.317	-.325		-.328	-.345	-.508				6
7	-.161	-.205	-.318	-.324		-.329	-.348	-.501				7
8	-.166	-.203	-.325	-.332		-.333	-.346	-.497				8
9	-.175	-.212	-.324	-.333		-.335	-.346	-.489				9
10	-.178	-.207		-.330		-.335	-.347	-.471				10
11	-.178	-.199		-.330		-.334						11
12	-.178	-.193		-.326		-.328	-.339	-.470				12
13	-.181	-.186	-.231	-.321		-.327	-.335	-.490				13
14	-.177	-.183	-.222	-.322		-.317	-.186	-.459				14
15	-.178	-.203	-.235	-.327		-.121	-.113	-.457				15
16	-.202	-.193	-.250	-.318		-.104	-.104	-.258				16
17						-.132	-.097	-.311				17
18	-.220	-.244	-.266	-.285		-.107	-.085	-.460				18
19	-.234	-.267	-.285	-.367	-.151	-.067	-.055	-.475				19
20	-.228	-.281	-.299	-.387	-.176	-.018	.001	-.454				20
21	-.272	-.278	-.294	-.393	-.177	.016	.054	-.417				21
22	-.184	-.100	-.135	-.280	-.180	.048	.071	-.376				22

Table 15 Continued

Pressure coefficients on swept wing

Configuration 6 M= 1.61 R= 3.6 x 10^6

Orif	Station 1	2	3	4	24	5	6	7	8	9	10	Orif
					α= 12		δ= -18.8					
1		.234	.198	.184		.646	-.008	.877				1
2		-.299	-.321	-.344		-.358	-.386	-.462				2
3		-.292	-.309	-.324		-.336	-.356	-.484				3
4		-.295	-.314	-.324		-.337	-.348	-.498				4
5		-.268	-.319	-.326		-.335	-.345	-.512				5
6	-.159	-.220	-.316	-.324		-.331	-.347	-.507				6
7	-.163	-.206	-.319	-.326		-.332	-.346	-.501				7
8	-.168	-.207	-.325	-.330		-.337	-.346	-.498				8
9	-.174	-.213	-.325	-.340		-.339	-.346	-.491				9
10	-.178	-.205		-.331		-.340	-.345	-.469				10
11	-.178	-.200		-.334		-.338						11
12	-.178	-.193		-.326		-.333	-.340	-.470				12
13	-.181	-.187	-.235	-.323		-.334	-.336	-.492				13
14	-.176	-.184	-.225	-.324		-.324	-.336	-.469				14
15	-.181	-.203	-.234	-.332		-.264	-.214	-.468				15
16	-.207	-.195	-.251	-.328		-.171	-.155	-.264				16
17						-.157	-.138	-.313				17
18	-.221	-.243	-.269	-.303		-.180	-.159	-.477				18
19	-.233	-.270	-.286	-.402	-.250	-.153	-.141	-.486				19
20	-.228	-.283	-.299	-.407	-.278	-.144	-.115	-.471				20
21	-.273	-.277	-.295	-.363	-.268	-.140	-.094	-.449				21
22	-.183	-.099	-.135	-.258	-.221	-.133	-.089	-.404				22
					α= 12		δ= -11.0					
1	.978	.236	.201	.189		.649	-.004	.882				1
2	-.086	-.299	-.321	-.343		-.355	-.384	-.462				2
3	-.143	-.290	-.309	-.320		-.338	-.354	-.479				3
4	-.129	-.292	-.309	-.322		-.335	-.345	-.498				4
5	-.140	-.267	-.315	-.322		-.332	-.343	-.511				5
6	-.154	-.219	-.314	-.323		-.329	-.342	-.507				6
7	-.160	-.204	-.317	-.325		-.331	-.346	-.505				7
8	-.163	-.206	-.324	-.332		-.335	-.346	-.498				8
9	-.174	-.212	-.326	-.338		-.339	-.346	-.491				9
10	-.176	-.204		-.330		-.338	-.347	-.464				10
11	-.176	-.198		-.330		-.337						11
12	-.176	-.193		-.324		-.332	-.336	-.468				12
13	-.179	-.187	-.232	-.321		-.332	-.334	-.485				13
14	-.172	-.183	-.221	-.321		-.324	-.335	-.464				14
15	-.179	-.201	-.232	-.326		-.324	-.285	-.464				15
16	-.200	-.194	-.247	-.329		-.224	-.205	-.261				16
17						-.154	-.163	-.402				17
18	-.219	-.246	-.265	-.312		-.279	-.264	-.483				18
19	-.232	-.265	-.283	-.418	-.312	-.272	-.268	-.489				19
20	-.224	-.280	-.296	-.396	-.342	-.279	-.259	-.474				20
21	-.264	-.275	-.292	-.304	-.301	-.276	-.248	-.459				21
22	-.186	-.097	-.136	-.179	-.234	-.268	-.212	-.422				22
					α= 12		δ= - 7.0					
1	.976	.235	.200	.187		.647	.000	.881				1
2	-.093	-.297	-.321	-.338		-.359	-.382	-.452				2
3	-.150	-.292	-.306	-.322		-.334	-.352	-.471				3
4	-.133	-.292	-.310	-.321		-.334	-.342	-.493				4
5	-.146	-.266	-.315	-.322		-.332	-.338	-.506				5
6	-.158	-.220	-.314	-.322		-.332	-.338	-.507				6
7	-.161	-.206	-.314	-.323		-.332	-.341	-.500				7
8	-.169	-.207	-.323	-.328		-.333	-.342	-.496				8
9	-.176	-.211	-.325	-.335		-.335	-.339	-.488				9
10	-.179	-.203		-.330		-.335	-.342	-.467				10
11	-.179	-.197		-.330		-.334						11
12	-.179	-.193		-.327		-.329	-.333	-.469				12
13	-.181	-.185	-.231	-.321		-.329	-.330	-.487				13
14	-.175	-.181	-.221	-.322		-.319	-.333	-.466				14
15	-.181	-.203	-.234	-.328		-.314	-.269	-.467				15
16	-.204	-.192	-.250	-.327		-.219	-.193	-.265				16
17						-.104	-.154	-.448				17
18	-.219	-.242	-.266	-.316		-.340	-.320	-.494				18
19	-.232	-.264	-.284	-.425	-.344	-.336	-.321	-.492				19
20	-.228	-.281	-.296	-.375	-.374	-.333	-.311	-.477				20
21	-.266	-.277	-.296	-.310	-.333	-.329	-.307	-.464				21
22	-.188	-.097	-.135	-.163	-.296	-.319	-.237	-.439				22

Table15 Continued

Pressure coefficients on swept wing

Configuration 6 M= 1.61 R=3.6 x 10^6

Orif	Station 1	2	3	4	24	5	6	7	8	9	10	Orif
					α= 12		δ= - 3.2					
1	.980	.230	.190	.181		.641	-.010	.873				1
2	-.089	-.301	-.320	-.344		-.359	-.386	-.452				2
3	-.146	-.292	-.307	-.325		-.334	-.358	-.462				3
4	-.132	-.295	-.315	-.323		-.335	-.348	-.469				4
5	-.145	-.273	-.319	-.326		-.333	-.345	-.484				5
6	-.159	-.220	-.318	-.324		-.332	-.343	-.484				6
7	-.162	-.206	-.320	-.326		-.333	-.346	-.478				7
8	-.170	-.206	-.325	-.328		-.334	-.348	-.476				8
9	-.175	-.214	-.326	-.335		-.335	-.345	-.471				9
10	-.175	-.205		-.333		-.335	-.346	-.459				10
11	-.177	-.200		-.331		-.333						11
12	-.178	-.193		-.326		-.329	-.336					12
13	-.180	-.189	-.233	-.322		-.330	-.333	-.449				13
14	-.174	-.183	-.226	-.324		-.321	-.333	-.396				14
15	-.178	-.203	-.234	-.329		-.325	-.292	-.418				15
16	-.203	-.193	-.251	-.329		-.225	-.202	-.257				16
17						-.166	-.161	-.384				17
18	-.221	-.244	-.266	-.323		-.316	-.333	-.407				18
19	-.232	-.264	-.286	-.431	-.326	-.355	-.350	-.419				19
20	-.222	-.281	-.298	-.358	-.324	-.364	-.347	-.418				20
21	-.266	-.278	-.297	-.300	-.294	-.361	-.341	-.404				21
22	-.186	-.098	-.136	-.189	-.250	-.271	-.215	-.371				22
					α= 12		δ= 0.8					
1	.979	.225	.187	.180		.644	-.007	.877				1
2	-.089	-.303	-.323	-.342		-.358	-.386	-.457				2
3	-.146	-.292	-.310	-.321		-.337	-.359	-.468				3
4	-.132	-.297	-.316	-.324		-.335	-.344	-.477				4
5	-.142	-.275	-.317	-.325		-.332	-.343	-.492				5
6	-.155	-.222	-.315	-.323		-.328	-.343	-.492				6
7	-.161	-.205	-.318	-.324		-.329	-.343	-.485				7
8	-.168	-.207	-.326	-.330		-.332	-.345	-.485				8
9	-.174	-.216	-.327	-.336		-.335	-.344	-.479				9
10	-.177	-.206		-.330		-.336	-.344	-.464				10
11	-.178	-.202		-.331		-.335						11
12	-.179	-.193		-.324		-.330	-.339	-.466				12
13	-.180	-.189	-.234	-.322		-.331	-.335	-.490				13
14	-.176	-.185	-.224	-.323		-.322	-.336	-.463				14
15	-.180	-.205	-.234	-.327		-.322	-.283	-.471				15
16	-.206	-.195	-.248	-.328		-.216	-.194	-.271				16
17						-.158	-.150	-.434				17
18	-.218	-.245	-.265	-.301		-.333	-.356	-.472				18
19	-.232	-.267	-.285	-.431	-.339	-.383	-.373	-.482				19
20	-.227	-.281	-.296	-.393	-.342	-.382	-.354	-.479				20
21	-.267	-.278	-.295	-.334	-.317	-.311	-.293	-.466				21
22	-.188	-.100	-.136	-.195	-.222	-.214	-.240	-.419				22
					α= 12		δ= 4.7					
1	.979	.228	.188	.181		.640	-.007	.877				1
2	-.092	-.301	-.322	-.341		-.360	-.390	-.462				2
3	-.150	-.292	-.310	-.323		-.336	-.359	-.477				3
4	-.135	-.297	-.314	-.325		-.335	-.345	-.486				4
5	-.147	-.277	-.321	-.326		-.333	-.340	-.500				5
6	-.158	-.224	-.317	-.324		-.331	-.342	-.497				6
7	-.163	-.206	-.319	-.325		-.331	-.344	-.492				7
8	-.171	-.206	-.328	-.330		-.333	-.342	-.488				8
9	-.171	-.213	-.327	-.336		-.335	-.341	-.482				9
10	-.178	-.206		-.330		-.338	-.342	-.469				10
11	-.179	-.201		-.331		-.335						11
12	-.178	-.193		-.325		-.331	-.338	-.470				12
13	-.180	-.189	-.235	-.326		-.331	-.336	-.491				13
14	-.176	-.185	-.225	-.324		-.324	-.335	-.466				14
15	-.178	-.203	-.234	-.330		-.320	-.260	-.472				15
16	-.204	-.196	-.250	-.327		-.210	-.176	-.269				16
17						-.136	-.127	-.444				17
18	-.219	-.245	-.267	-.298		-.362	-.383	-.478				18
19	-.234	-.268	-.289	-.432	-.354	-.411	-.364	-.486				19
20	-.229	-.282	-.299	-.405	-.362	-.364	-.324	-.481				20
21	-.268	-.275	-.298	-.364	-.339	-.308	-.295	-.463				21
22	-.189	-.098	-.138	-.221	-.261	-.263	-.276	-.423				22

Table 15 Concluded

Pressure coefficients on swept wing

Configuration 6 M= 1.61 R=3.6 x 10^6

Orif	Station 1	2	3	4	24	5	6	7	8	9	10	Orif
					α= 12		δ= 12.5					
1	.979	.234	.198	.188		.648	.000	.881				1
2	-.088	-.295	-.321	-.342		-.355	-.384	-.460				2
3	-.148	-.288	-.309	-.318		-.333	-.355	-.478				3
4	-.133	-.291	-.310	-.321		-.334	-.345	-.490				4
5	-.142	-.265	-.315	-.320		-.332	-.342	-.502				5
6	-.155	-.219	-.315	-.320		-.333	-.340	-.501				6
7	-.161	-.201	-.314	-.320		-.329	-.342	-.494				7
8	-.168	-.203	-.320	-.323		-.330	-.343	-.490				8
9	-.176	-.214	-.319	-.333		-.335	-.343	-.484				9
10	-.174	-.204		-.322		-.336	-.343	-.465				10
11	-.177	-.196		-.322		-.333						11
12	-.176	-.191		-.320		-.328	-.335	-.469				12
13	-.178	-.187	-.230	-.320		-.321	-.334	-.494				13
14	-.176	-.181	-.219	-.321		-.317	-.333	-.467				14
15	-.178	-.201	-.232	-.321		-.293	-.168	-.471				15
16	-.202	-.191	-.247	-.320		-.178	-.127	-.266				16
17						-.039	.007	-.456				17
18	-.215	-.242	-.265	-.302		-.390	-.402	-.486				18
19	-.231	-.264	-.284	-.418	-.364	-.404	-.350	-.492				19
20	-.229	-.279	-.296	-.417	-.383	-.357	-.327	-.475				20
21	-.263	-.275	-.294	-.382	-.365	-.338	-.316	-.459				21
22	-.184	-.095	-.136	-.211	-.336	-.309	-.316	-.436				22
					α= 12		δ= 20.3					
1	.976	.235	.202	.191		.651	.007	.887				1
2	-.085	-.293	-.318	-.339		-.356	-.380	-.453				2
3	-.150	-.290	-.308	-.314		-.333	-.352	-.473				3
4	-.133	-.291	-.312	-.314		-.332	-.342	-.492				4
5	-.143	-.265	-.311	-.315		-.327	-.339	-.506				5
6	-.155	-.220	-.312	-.315		-.328	-.337	-.507				6
7	-.160	-.202	-.314	-.316		-.324	-.339	-.496				7
8	-.172	-.204	-.322	-.324		-.330	-.343	-.494				8
9	-.176	-.211	-.324	-.334		-.334	-.339	-.487				9
10	-.179	-.202		-.330		-.334	-.340	-.465				10
11	-.179	-.196		-.328		-.332						11
12	-.178	-.192		-.321		-.326	-.332	-.463				12
13	-.179	-.187	-.233	-.316		-.326	-.328	-.486				13
14	-.172	-.181	-.221	-.316		-.313	-.330	-.463				14
15	-.178	-.200	-.231	-.326		-.220	-.105	-.467				15
16	-.204	-.192	-.246	-.313		-.139	-.083	-.261				16
17						.190	.141	-.466				17
18	-.221	-.242	-.264	-.304		-.421	-.404	-.492				18
19	-.232	-.262	-.287	-.408	-.384	-.410	-.362	-.488				19
20	-.235	-.278	-.296	-.429	-.408	-.380	-.358	-.472				20
21	-.267	-.277	-.294	-.374	-.390	-.371	-.354	-.460				21
22	-.185	-.096	-.136	-.242	-.387	-.356	-.354	-.448				22
					α= 15		δ= - 3.5					
1	1.010	.090	-.037	-.035		.425	-.203	.686				1
2	-.121	-.345	-.366	-.398		-.408	-.431	-.483				2
3	-.175	-.334	-.359	-.380		-.389	-.410	-.494				3
4	-.166	-.333	-.359	-.374		-.385	-.396	-.506				4
5	-.177	-.327	-.359	-.369		-.379	-.392	-.514				5
6	-.189	-.286	-.357	-.369		-.377	-.393	-.511				6
7	-.189	-.239	-.354	-.367		-.377	-.392	-.506				7
8	-.197	-.237	-.359	-.365		-.379	-.387	-.503				8
9	-.206	-.236	-.362	-.374		-.381	-.387	-.494				9
10	-.211	-.231		-.368		-.377	-.384	-.483				10
11	-.208	-.226		-.365		-.375						11
12	-.208	-.222		-.364		-.370	-.378	-.485				12
13	-.209	-.215	-.289	-.362		-.367	-.378	-.503				13
14	-.203	-.208	-.274	-.358		-.364	-.364	-.463				14
15	-.206	-.230	-.279	-.362		-.348	-.305	-.460				15
16	-.227	-.221	-.287	-.362		-.262	-.246	-.268				16
17						-.195	-.178	-.360				17
18	-.248	-.266	-.305	-.340		-.270	-.329	-.459				18
19	-.258	-.289	-.321	-.383	-.278	-.334	-.322	-.470				19
20	-.241	-.303	-.326	-.356	-.265	-.324	-.308	-.457				20
21	-.290	-.296	-.319	-.317	-.259	-.272	-.253	-.432				21
22	-.198	-.104	-.165	-.153	-.266	-.230	-.220	-.397				22

Table16

Pressure coefficients on swept wing

Configuration 7 M=1.61 R=3.6 x 10^6

Orif	Station 1	2	3	4	24	5	6	7	8	9	10	Orif
					$\alpha=-15$		$\delta=-0.2$					
1	.624	.667	.647	.478		-.169	.409	-.237	-.046	.743	-.363	1
2	.465	.589	.650	.656		.696	.710	.655	.773	.618	.389	2
3	.463	.518	.595	.632		.634	.658	.682	.678	.405	.272	3
4	.447	.466	.546	.566		.596	.618	.641	.523	.292	.144	4
5	.417	.453	.492	.532		.557	.600	.602	.437	.068	.066	5
6	.400	.456	.471	.500		.530	.579	.604	.131		-.126	6
7	.411	.428	.447	.477		.505	.568	.583	.130			7
8	.430	.413	.408	.455		.489	.577	.536				8
9	.426	.389	.421	.452		.495	.574	.498				9
10	.400	.404		.447		.498	.551	.419				10
11	.411	.408		.452		.504						11
12	.413	.413		.461		.502	.518	.398				12
13	.402	.413	.425	.447		.484	.486	.415				13
14	.402	.390	.394	.411		.456	.437	.465				14
15	.393	.327	.327	.344		.338	.316	.118				15
16	.340	.236	.228	.268		.106	-.207	.394				16
17						-.188	-.109					17
18	.287	.229	.230	.219		.379	.358	.105				18
19	.229	.191	.186	.159		.236	.244	.128				19
20	.233	.185	.167	.262		.243	.263	.126				20
21	.250	.212	.199	.214		.245	.272	.138				21
22	.235	.221	.242	.247		.243	.273	.147				22
					$\alpha=-12$		$\delta=-27.4$					
1	.729	.703	.727	.614		.121	.622	.183	.064	.966	-.355	1
2	.408	.491	.521	.529		.569	.576	.333	.719	.785	.617	2
3	.363	.410	.444	.469		.475	.512	.287	.644	1.063	.562	3
4	.354	.349	.400	.424		.454	.463	.187	.498	1.048	.756	4
5	.327	.327	.356	.393		.416	.432	.133	.842	.590	.622	5
6	.303	.309	.339	.356		.381	.410	.103	.784		.203	6
7	.294	.292	.310	.323		.361	.376	.089	.525			7
8	.290	.268	.265	.295		.331	.376	.193				8
9	.286	.250	.269	.299		.339	.376	.484				9
10	.260	.259		.320		.342	.369	.671				10
11	.271	.268		.324		.346						11
12	.277	.277		.328		.348	.550	.857				12
13	.266	.283	.318	.321		.343	.687	.913				13
14	.270	.277	.292	.304		.330	.736	1.008				14
15	.266	.232	.236	.251		.507	.743	.996				15
16	.230	.156	.157	.224		.479	.564	1.085				16
17						.351	.323					17
18	.192	.137	.142	.245		1.099	1.123	.884				18
19	.177	.098	.099	.291		1.008	.993	.821				19
20	.148	.094	.073	-.022		.884	.888	.727				20
21	.098	.118	.088	-.132		.814	.810	.632				21
22	.122	.111	.101	-.147		.652	.608	.497				22
					$\alpha=-12$		$\delta=-18.2$					
1	.729	.704	.726	.611		.115	.620	.175	.264	.844	-.287	1
2	.409	.494	.522	.529		.564	.577	.334	.443	.640	.483	2
3	.364	.413	.446	.470		.474	.513	.283	.425	.786	.404	3
4	.356	.354	.402	.424		.452	.463	.180	.420	.762	.444	4
5	.328	.330	.356	.392		.412	.433	.126	.794	.478	.408	5
6	.308	.312	.339	.355		.377	.411	.095	.669		.088	6
7	.299	.295	.310	.325		.357	.376	.096	.430			7
8	.293	.270	.265	.295		.334	.378	.185				8
9	.289	.253	.269	.300		.341	.378	.378				9
10	.262	.262		.321		.345	.371	.510				10
11	.271	.270		.327		.347						11
12	.279	.278		.328		.350	.372	.712				12
13	.268	.284	.319	.319		.346	.357	.768				13
14	.270	.279	.293	.304		.331	.334	.859				14
15	.267	.233	.238	.250		.235	.418	.832				15
16	.232	.159	.152	.211		.043	.195	.922				16
17						.026	.091					17
18	.190	.139	.141	.186		.871	.993	.742				18
19	.155	.099	.097	.146		.684	.727	.704				19
20	.145	.091	.073	.106		.585	.661	.612				20
21	.121	.115	.086	-.099		.537	.652	.521				21
22	.131	.116	.096	-.119		.458	.510	.414				22

Table16 Continued

Pressure coefficients on swept wing

Configuration 7 M=1.61 R=3.6 x 10^6

Orif	Station 1	2	3	4	24	5	6	7	8	9	10	Orif
					α=-12		δ= - 9.0					
1	.731	.703	.728	.611		.113	.618	.165	.426	.720	-.181	1
2	.410	.496	.524	.531		.572	.580	.337	.400	.634	.390	2
3	.365	.415	.447	.477		.480	.516	.286	.295	.460	.297	3
4	.358	.353	.403	.426		.459	.467	.184	.516	.392	.168	4
5	.330	.330	.358	.395		.419	.437	.142	.514	.279	.115	5
6	.308	.313	.339	.359		.383	.415	.270	.337		-.076	6
7	.300	.297	.310	.327		.364	.380	.456	.269			7
8	.296	.273	.267	.298		.335	.382	.530				8
9	.291	.256	.270	.302		.343	.383	.531				9
10	.265	.265		.325		.347	.377	.452				10
11	.273	.273		.329		.350						11
12	.282	.280		.333		.354	.376	.480				12
13	.272	.287	.322	.325		.349	.361	.447				13
14	.271	.282	.295	.308		.335	.333	.579				14
15	.268	.238	.239	.254		.237	.232	.378				15
16	.233	.162	.148	.186		.035	-.151	.505				16
17						-.131	-.072					17
18	.189	.143	.145	.158		.566	.586	.391				18
19	.147	.104	.100	.108		.376	.388	.399				19
20	.143	.093	.076	.161		.319	.343	.349				20
21	.143	.116	.088	.115		.289	.316	.295				21
22	.134	.118	.096	-.046		.253	.288	.264				22
					α=-12		δ= - 4.4					
1	.730	.706	.727	.610		.109	.614	.159	.443	.707	-.044	1
2	.410	.495	.524	.531		.571	.580	.340	.323	.535	.301	2
3	.365	.416	.449	.477		.480	.518	.295	.523	.348	.196	3
4	.359	.355	.404	.427		.459	.468	.276	.330	.294	.099	4
5	.331	.333	.358	.395		.419	.439	.521	.366	.077	.049	5
6	.308	.314	.341	.359		.384	.417	.538	.087		-.189	6
7	.300	.298	.312	.327		.366	.381	.513	.071			7
8	.294	.273	.267	.299		.336	.383	.474				8
9	.290	.256	.271	.301		.343	.384	.454				9
10	.264	.264		.322		.349	.379	.386				10
11	.272	.273		.329		.351						11
12	.282	.280		.331		.355	.378	.383				12
13	.271	.286	.322	.324		.349	.364	.400				13
14	.271	.284	.294	.305		.335	.335	.490				14
15	.268	.239	.240	.253		.237	.232	.163				15
16	.233	.162	.147	.179		.035	-.195	.323				16
17						-.177	-.129					17
18	.189	.143	.144	.135		.386	.343	.012				18
19	.146	.102	.100	.082		.196	.144	.117				19
20	.142	.092	.076	.157		.136	.146	.122				20
21	.146	.116	.087	.109		.121	.147	.077				21
22	.136	.118	.097	.023		.095	.070	.065				22
					α=-12		δ= 0.2					
1	.729	.704	.729	.610		.109	.613	.154	.352	.602	-.058	1
2	.409	.495	.526	.530		.571	.579	.340	.389	.460	.264	2
3	.362	.414	.451	.476		.481	.517	.480	.436	.274	.148	3
4	.357	.354	.406	.426		.459	.468	.483	.384	.219	.062	4
5	.329	.331	.357	.396		.419	.439	.469	.354	-.013	.012	5
6	.306	.313	.339	.359		.383	.418	.453	.037		-.196	6
7	.298	.296	.309	.327		.364	.382	.441	.016			7
8	.294	.273	.266	.299		.337	.385	.409				8
9	.289	.255	.270	.301		.344	.385	.390				9
10	.262	.264		.323		.349	.380	.329				10
11	.272	.272		.328		.351						11
12	.279	.279		.333		.355	.378	.324				12
13	.270	.285	.321	.324		.350	.363	.350				13
14	.270	.282	.294	.306		.335	.336	.410				14
15	.265	.239	.239	.253		.238	.234	.095				15
16	.230	.165	.148	.179		.035	-.188	.287				16
17						-.173	-.132					17
18	.188	.143	.145	.129		.304	.271	.006				18
19	.145	.104	.100	.068		.132	.111	.050				19
20	.142	.092	.076	.139		.114	.121	.038				20
21	.148	.117	.089	.089		.104	.126	.019				21
22	.136	.118	.097	.105		.093	.109	.031				22

Table 16 Continued

Pressure coefficients on swept wing

Configuration 7 M= 1.61 R=3.6 x 10^6

Orif	Station 1	2	3	4	24	5	6	7	8	9	10	Orif
					α= -12		δ= 4.9					
1	.728	.705	.728	.609		.106	.616	.160	.904	.526	-.001	1
2	.409	.495	.525	.532		.575	.584	.620	.471	.397	.204	2
3	.362	.415	.449	.478		.485	.522	.713	.262	.228	.104	3
4	.356	.355	.405	.427		.463	.472	.737	.242	.162	.024	4
5	.329	.332	.357	.397		.423	.444	.545	.187	-.091	-.023	5
6	.304	.314	.339	.361		.387	.423	.442	-.075		-.221	6
7	.299	.297	.310	.330		.368	.386	.417	-.089			7
8	.295	.272	.267	.301		.338	.390	.384				8
9	.289	.256	.271	.305		.345	.391	.375				9
10	.263	.264		.327		.351	.384	.271				10
11	.273	.272		.332		.354						11
12	.281	.282		.336		.357	.383	.261				12
13	.272	.287	.324	.328		.353	.375	.195				13
14	.271	.283	.294	.310		.339	.365	.333				14
15	.268	.238	.239	.255		.239	.271	-.017				15
16	.230	.165	.147	.179		.039	-.195	.231				16
17						-.192	-.142					17
18	.188	.143	.145	.126		.161	.153	-.114				18
19	.146	.103	.100	.029		-.021	-.006	-.083				19
20	.142	.094	.076	.084		-.016	-.013	-.094				20
21	.149	.117	.090	.026		-.014	-.012	-.093				21
22	.137	.120	.098	.024		.002	-.004	-.075				22
					α= -12		δ= 9.6					
1	.729	.705	.727	.609		.104	.615	.141	1.019	.431	.267	1
2	.408	.496	.525	.531		.573	.589	.445	.407	.352	.158	2
3	.363	.415	.449	.478		.485	.524	.434	.234	.211	.107	3
4	.357	.355	.406	.427		.463	.475	.341	.162	.136	.038	4
5	.330	.332	.358	.396		.422	.447	.299	.053	-.133	-.030	5
6	.307	.315	.340	.361		.386	.424	.331	-.151		-.233	6
7	.299	.296	.311	.329		.368	.388	.425	-.165			7
8	.295	.273	.267	.299		.342	.392	.538				8
9	.290	.256	.271	.305		.349	.393	.581				9
10	.262	.264		.325		.355	.387	.340				10
11	.272	.273		.330		.358						11
12	.281	.280		.336		.362	.384	.338				12
13	.272	.287	.324	.328		.356	.374	.196				13
14	.272	.283	.296	.308		.341	.363	.407				14
15	.267	.239	.240	.256		.243	.264	-.074				15
16	.230	.169	.147	.175		.041	-.186	.198				16
17						-.194	-.138					17
18	.187	.143	.144	.123		.056	.042	-.189				18
19	.146	.103	.099	-.012		-.110	-.096	-.163				19
20	.141	.094	.075	.007		-.104	-.102	-.164				20
21	.149	.117	.088	-.028		-.103	-.098	-.161				21
22	.137	.120	.097	-.021		-.086	-.080	-.146				22
					α= -12		δ= 19.1					
1	.730	.705	.727	.608		.099	.609	.126	1.110	.297	.647	1
2	.409	.496	.528	.532		.577	.590	.347	.152	.251	.186	2
3	.362	.416	.451	.480		.487	.528	.304	.093	.171	.134	3
4	.357	.355	.408	.429		.466	.479	.326	.048	.111	.085	4
5	.331	.332	.362	.400		.424	.452	.287	-.021	-.229	.015	5
6	.308	.314	.343	.364		.388	.428	.263	-.288		-.250	6
7	.299	.299	.313	.332		.372	.391	.251	-.304			7
8	.295	.276	.271	.304		.343	.395	.235				8
9	.291	.257	.275	.310		.351	.397	.209				9
10	.265	.267		.331		.357	.391	.215				10
11	.275	.275		.336		.360						11
12	.284	.283		.341		.364	.388	.478				12
13	.273	.289	.327	.332		.358	.374	.505				13
14	.274	.285	.299	.314		.342	.360	.585				14
15	.270	.242	.244	.259		.244	.274	-.079				15
16	.232	.171	.147	.174		.040	-.180	.164				16
17						-.167	-.146					17
18	.191	.146	.146	.126		-.133	-.156	-.316				18
19	.147	.106	.102	-.054		-.272	-.257	-.308				19
20	.143	.096	.077	-.088		-.267	-.264	-.310				20
21	.152	.118	.091	-.086		-.268	-.264	-.298				21
22	.140	.123	.099	-.075		-.258	-.240	-.284				22

Table16 Continued

Pressure coefficients on swept wing

Configuration 7 M=1.61 R=3.6 x 10^6

Orif	Station 1	2	3	4	24	5	6	7	8	9	10	Orif
					α=-12		δ= 28.9					
1	.730	.703	.728	.606		.092	.607	.115	1.181	.169	.506	1
2	.409	.496	.529	.534		.578	.592	.349	-.013	.141	-.090	2
3	.363	.416	.452	.482		.491	.533	.303	-.060	.042	.081	3
4	.359	.355	.409	.431		.468	.481	.204	-.069	-.121	.074	4
5	.330	.332	.362	.401		.427	.455	.294	-.047	-.317	.013	5
6	.309	.317	.342	.366		.393	.432	.318	-.359		-.231	6
7	.299	.299	.313	.334		.375	.395	.340	-.386			7
8	.297	.277	.271	.306		.346	.399	.329				8
9	.292	.257	.275	.313		.355	.402	.290				9
10	.267	.268		.332		.361	.397	.262				10
11	.276	.274		.339		.365						11
12	.284	.284		.341		.369	.393	.258				12
13	.276	.291	.329	.336		.361	.379	.351				13
14	.274	.286	.301	.316		.347	.353	.918				14
15	.271	.243	.246	.259		.247	.288	-.013				15
16	.231	.174	.148	.168		.045	-.178	.199				16
17						-.169	-.206					17
18	.192	.146	.147	.132		-.267	-.277	-.379				18
19	.149	.106	.103	-.070		-.364	-.348	-.387				19
20	.144	.097	.078	-.125		-.359	-.355	-.397				20
21	.154	.119	.092	-.101		-.361	-.354	-.391				21
22	.141	.124	.101	-.092		-.336	-.305	-.370				22
					α= - 9		δ= - 0.2					
1	.789	.724	.763	.680		.335	.718	.479	.433	.492	-.054	1
2	.380	.402	.441	.456		.478	.499	.329	.482	.375	.202	2
3	.274	.321	.349	.369		.376	.423	.402	.395	.200	.100	3
4	.277	.270	.313	.335		.364	.372	.368	.268	.173	.021	4
5	.250	.243	.272	.306		.333	.341	.346	.296	-.013	-.015	5
6	.230	.231	.257	.275		.299	.311	.319	.047		-.169	6
7	.221	.220	.240	.248		.274	.271	.313	.008			7
8	.216	.191	.189	.214		.228	.255	.286				8
9	.213	.177	.188	.197		.221	.253	.275				9
10	.189	.186		.214		.232	.249	.212				10
11	.198	.192		.217		.238						11
12	.204	.199		.227		.241	.262	.201				12
13	.195	.201	.216	.222		.239	.253	.260				13
14	.193	.191	.204	.212		.236	.246	.312				14
15	.185	.152	.160	.168		.161	.176	.013				15
16	.149	.091	.074	.098		-.014	-.137	.331				16
17						-.093	-.091					17
18	.109	.064	.074	.060		.272	.233	.012				18
19	.079	.025	.025	.001		.070	.086	.045				19
20	.063	.010	-.001	.055		.066	.080	.020				20
21	.043	.026	.007	.005		.053	.084	.011				21
22	.049	.037	.012	.021		.045	.104	.019				22
					α= - 6		δ= -26.6					
1	.812	.721	.762	.712		.540	.739	.732	.258	.710	-.250	1
2	.244	.325	.356	.383		.383	.391	.207	.627	.610	.435	2
3	.208	.226	.254	.265		.250	.310	.095	.488	.616	.383	3
4	.202	.189	.223	.232		.261	.270	.041	.386	.724	.402	4
5	.180	.165	.185	.211		.230	.244	-.004	.876	.534	.385	5
6	.160	.154	.172	.190		.213	.219	.004	.756		.111	6
7	.154	.150	.161	.170		.189	.189	.087	.429			7
8	.146	.125	.118	.140		.151	.166	.183				8
9	.145	.108	.112	.118		.137	.155	.433				9
10	.123	.117		.127		.135	.146	.528				10
11	.128	.124		.129		.138						11
12	.137	.129		.140		.146	.152	.585				12
13	.128	.134	.136	.136		.149	.150	.616				13
14	.132	.126	.134	.132		.149	.321	.719				14
15	.117	.092	.096	.102		.094	.508	.788				15
16	.091	.042	.031	.083		.101	.459	.882				16
17						.143	.325					17
18	.056	.009	.014	.114		.778	1.085	.645				18
19	.050	-.028	-.026	.091		.849	.978	.805				19
20	.043	-.041	-.052	-.147		.722	.843	.684				20
21	-.048	-.022	-.049	-.236		.654	.754	.549				21
22	-.018	-.014	-.045	-.194		.539	.563	.413				22

Table 16 Continued

Pressure coefficients on swept wing

Configuration 7 M=1.61 R=3.6 x 10^6

Orif	Station 1	2	3	4	24	5	6	7	8	9	10	Orif
					α=-6		δ=-17.9					
1	.814	.723	.761	.713		.539	.738	.727	.510	.585	-.089	1
2	.245	.327	.356	.385		.386	.396	.211	.320	.452	.308	2
3	.208	.225	.255	.267		.254	.316	.100	.308	.366	.236	3
4	.204	.192	.223	.235		.264	.274	.047	.329	.397	.149	4
5	.182	.166	.187	.214		.233	.248	.000	.633	.341	.111	5
6	.160	.155	.175	.191		.216	.224	.016	.467		-.074	6
7	.154	.150	.162	.172		.192	.194	.196	.297			7
8	.145	.126	.121	.142		.152	.171	.255				8
9	.146	.108	.110	.119		.139	.160	.285				9
10	.123	.117		.129		.137	.150	.251				10
11	.129	.126		.130		.140						11
12	.137	.129		.142		.147	.158	.279				12
13	.127	.135	.139	.141		.151	.154	.335				13
14	.129	.127	.135	.136		.152	.152	.505				14
15	.118	.091	.096	.103		.092	.106	.526				15
16	.091	.042	.028	.070		-.046	.045	.627				16
17						.003	.059					17
18	.053	.010	.015	.057		.628	.719	.536				18
19	.047	-.028	-.023	.001		.514	.582	.499				19
20	.029	-.041	-.052	-.049		.431	.491	.432				20
21	-.038	-.025	-.049	-.194		.383	.432	.354				21
22	-.015	-.015	-.045	-.182		.314	.378	.289				22
					α=-6		δ=-9.2					
1	.815	.724	.762	.717		.532	.739	.714	.686	.517	.066	1
2	.248	.328	.358	.388		.389	.402	.216	.242	.392	.204	2
3	.211	.230	.256	.271		.258	.324	.107	.334	.203	.101	3
4	.208	.194	.223	.239		.269	.282	.061	.320	.221	.023	4
5	.185	.170	.190	.217		.238	.254	.145	.384	.010	.000	5
6	.164	.159	.177	.196		.220	.230	.282	.092		-.204	6
7	.158	.154	.166	.175		.196	.200	.301	.056			7
8	.148	.129	.122	.146		.156	.176	.301				8
9	.148	.112	.115	.123		.144	.165	.303				9
10	.126	.118		.132		.144	.156	.232				10
11	.132	.128		.134		.146						11
12	.141	.132		.145		.152	.165	.216				12
13	.129	.136	.144	.145		.156	.160	.277				13
14	.132	.128	.139	.140		.159	.158	.388				14
15	.119	.092	.101	.107		.099	.108	.095				15
16	.091	.043	.025	.048		-.047	-.071	.269				16
17						-.046	-.037					17
18	.057	.011	.018	.030		.390	.350	.049				18
19	.044	-.026	-.021	-.018		.219	.200	.134				19
20	.022	-.041	-.049	.024		.171	.180	.127				20
21	-.031	-.026	-.045	-.038		.147	.161	.070				21
22	-.009	-.015	-.041	-.140		.107	.132	.055				22
					α=-6		δ=-4.8					
1	.812	.723	.763	.711		.527	.732	.708	.725	.421	.196	1
2	.246	.328	.361	.386		.387	.400	.217	.286	.281	.108	2
3	.209	.228	.258	.270		.258	.321	.115	.360	.091	.034	3
4	.207	.194	.226	.236		.266	.279	.237	.129	.111	-.021	4
5	.184	.169	.188	.215		.236	.252	.348	.193	-.086	-.038	5
6	.163	.158	.176	.194		.219	.228	.331	-.091		-.208	6
7	.157	.153	.164	.174		.193	.198	.295	-.110			7
8	.147	.127	.120	.145		.155	.174	.244				8
9	.147	.111	.112	.121		.142	.165	.230				9
10	.126	.119		.131		.141	.156	.165				10
11	.132	.129		.133		.143						11
12	.138	.131		.145		.150	.164	.148				12
13	.129	.136	.142	.144		.154	.160	.206				13
14	.131	.129	.137	.138		.156	.158	.347				14
15	.119	.093	.100	.105		.096	.107	.013				15
16	.091	.045	.022	.041		-.049	-.104	.212				16
17						-.057	-.056					17
18	.056	.012	.017	.018		.252	.192	-.129				18
19	.043	-.024	-.023	-.034		.054	.003	-.066				19
20	.021	-.039	-.051	.020		.012	.001	-.072				20
21	-.029	-.024	-.048	-.032		.005	.005	-.115				21
22	-.008	-.013	-.044	-.094		-.020	-.025	-.101				22

Table 16 Continued

Pressure coefficients on swept wing

Configuration 7 M=1.61 R=3.6 x 10^6

Orif	Station 1	2	3	4	24	5	6	7	8	9	10	Orif
					α=- 6		δ= - 0.5					
1	.815	.724	.764	.713		.529	.735	.703	.555	.351	.227	1
2	.245	.328	.362	.389		.392	.404	.364	.349	.242	.081	2
3	.208	.226	.259	.271		.263	.323	.320	.279	.065	.004	3
4	.207	.193	.227	.241		.271	.280	.285	.148	.057	-.040	4
5	.184	.167	.190	.218		.241	.254	.262	.133	-.098	-.069	5
6	.163	.158	.177	.197		.222	.229	.237	-.093		-.240	6
7	.156	.152	.165	.177		.197	.200	.220	-.116			7
8	.147	.126	.122	.146		.158	.175	.188				8
9	.147	.111	.114	.124		.145	.165	.177				9
10	.123	.118		.132		.144	.155	.108				10
11	.132	.128		.134		.146						11
12	.139	.132		.147		.152	.165	.088				12
13	.129	.136	.145	.146		.156	.160	.150				13
14	.130	.129	.140	.140		.158	.158	.241				14
15	.118	.093	.101	.106		.098	.107	-.035				15
16	.089	.044	.021	.037		-.049	-.104	.194				16
17						-.066	-.069					17
18	.054	.012	.018	.008		.167	.117	-.106				18
19	.043	-.024	-.022	-.049		-.029	-.042	-.085				19
20	.020	-.040	-.051	-.007		-.043	-.042	-.093				20
21	-.029	-.025	-.047	-.052		-.044	-.044	-.115				21
22	-.008	-.014	-.044	-.037		-.058	-.059	-.113				22
					α=- 6		δ= 3.9					
1	.814	.723	.763	.715		.526	.733	.699	.934	.310	.333	1
2	.246	.327	.361	.390		.394	.404	.408	.313	.220	.076	2
3	.207	.225	.258	.272		.263	.325	.345	.191	.053	.014	3
4	.205	.193	.225	.240		.272	.280	.455	.100	.039	-.038	4
5	.184	.167	.190	.217		.240	.253	.294	.080	-.115	-.076	5
6	.161	.156	.178	.196		.225	.230	.209	-.124		-.238	6
7	.155	.150	.166	.177		.200	.200	.181	-.145			7
8	.146	.127	.122	.145		.159	.175	.137				8
9	.146	.108	.115	.123		.145	.165	.140				9
10	.123	.117		.132		.145	.155	.068				10
11	.132	.127		.135		.147						11
12	.136	.131		.147		.153	.165	.057				12
13	.128	.136	.145	.146		.157	.160	.060				13
14	.129	.128	.140	.142		.159	.160	.193				14
15	.118	.092	.103	.108		.098	.116	-.066				15
16	.088	.044	.021	.036		-.049	-.103	.186				16
17						-.072	-.073					17
18	.053	.011	.020	.008		.090	.056	-.142				18
19	.041	-.024	-.023	-.069		-.101	-.091	-.122				19
20	.017	-.040	-.051	-.034		-.104	-.094	-.137				20
21	-.029	-.027	-.046	-.085		-.104	-.099	-.145				21
22	-.009	-.014	-.042	-.083		-.106	-.101	-.143				22
					α=- 6		δ= 8.4					
1	.815	.723	.763	.717		.525	.733	.696	1.029	.233	.556	1
2	.247	.327	.362	.392		.396	.407	.225	.234	.174	.081	2
3	.209	.228	.257	.274		.268	.327	.301	.109	.058	.042	3
4	.208	.195	.227	.243		.274	.283	.185	.031	.038	.009	4
5	.184	.171	.191	.220		.244	.257	.140	.010	-.123	-.046	5
6	.164	.159	.179	.200		.225	.232	.131	-.183		-.228	6
7	.157	.154	.167	.180		.202	.202	.188	-.210			7
8	.150	.131	.123	.149		.159	.176	.262				8
9	.148	.113	.116	.128		.146	.169	.239				9
10	.127	.118		.136		.146	.160	.089				10
11	.133	.129		.138		.148						11
12	.141	.132		.151		.155	.169	.073				12
13	.131	.139	.147	.150		.159	.164	.042				13
14	.132	.131	.142	.146		.161	.165	.266				14
15	.121	.094	.104	.110		.101	.122	-.096				15
16	.090	.049	.024	.037		-.044	-.091	.172				16
17						-.065	-.063					17
18	.055	.013	.020	.009		-.009	-.035	-.207				18
19	.042	-.022	-.021	-.097		-.183	-.165	-.187				19
20	.020	-.037	-.049	-.083		-.184	-.173	-.198				20
21	-.025	-.022	-.045	-.123		-.182	-.175	-.204				21
22	-.005	-.012	-.041	-.122		-.180	-.165	-.197				22

Table 16 Continued

Pressure coefficients on swept wing

Configuration 7 M= 1.61 R= 3.6 x 10^6

Orif	Station 1	2	3	4	24	5	6	7	8	9	10	Orif
					α= - 6		δ= 17.4					
1	.818	.726	.764	.714		.521	.739	.686	1.098	.133	.644	1
2	.248	.332	.364	.393		.397	.412	.226	.061	.089	.032	2
3	.208	.230	.260	.276		.270	.333	.122	-.011	.035	.062	3
4	.209	.196	.229	.244		.275	.288	.169	-.064	-.002	.023	4
5	.185	.172	.192	.221		.244	.264	.221	-.029	-.176	-.012	5
6	.165	.160	.179	.201		.227	.237	.188	-.272		-.188	6
7	.157	.156	.167	.181		.202	.208	.143	-.298			7
8	.150	.132	.122	.151		.163	.182	.118				8
9	.148	.113	.117	.129		.151	.174	.080				9
10	.130	.120		.137		.150	.164	.033				10
11	.137	.129		.140		.152						11
12	.142	.134		.152		.160	.174	.105				12
13	.132	.139	.148	.152		.163	.170	.189				13
14	.134	.132	.144	.146		.165	.169	.408				14
15	.122	.096	.105	.112		.105	.122	-.104				15
16	.091	.053	.023	.047		-.019	-.017	.153				16
17						-.015	-.008					17
18	.056	.015	.018	.005		-.162	-.178	-.294				18
19	.044	-.021	-.022	-.126		-.299	-.282	-.280				19
20	.022	-.037	-.049	-.145		-.298	-.290	-.287				20
21	-.022	-.021	-.044	-.169		-.300	-.293	-.303				21
22	-.004	-.010	-.039	-.155		-.285	-.270	-.270				22
					α= - 6		δ= 26.6					
1	.813	.724	.764	.711		.515	.739	.676	1.170	-.006	.509	1
2	.245	.330	.366	.392		.397	.416	.229	-.070	.012	-.184	2
3	.206	.230	.261	.275		.271	.337	.124	-.110	-.045	-.057	3
4	.207	.195	.231	.242		.276	.292	.062	-.142	-.117	-.064	4
5	.184	.172	.192	.220		.246	.267	.018	-.104	-.233	-.057	5
6	.163	.160	.181	.200		.228	.241	.290	-.319		-.189	6
7	.157	.155	.167	.181		.203	.211	.317	-.324			7
8	.149	.131	.124	.147		.163	.186	.288				8
9	.146	.114	.117	.127		.152	.178	.240				9
10	.131	.121		.135		.152	.168	.182				10
11	.137	.131		.140		.154						11
12	.140	.135		.152		.160	.180	.137				12
13	.134	.141	.149	.150		.163	.175	.115				13
14	.134	.134	.146	.146		.167	.174	.560				14
15	.123	.099	.107	.112		.106	.127	-.090				15
16	.090	.058	.026	.063		.027	.105	.161				16
17						.041	.094					17
18	.058	.017	.019	.036		-.273	-.281	-.348				18
19	.047	-.021	-.021	-.145		-.369	-.345	-.341				19
20	.026	-.035	-.049	-.181		-.363	-.349	-.354				20
21	-.022	-.022	-.046	-.185		-.358	-.343	-.346				21
22	-.002	-.010	-.041	-.166		-.301	-.293	-.294				22
					α= - 3		δ= - 0.2					
1	.859	.703	.746	.733		.693	.737	.862	.725	.096	.371	1
2	.162	.190	.230	.249		.268	.252	.271	.069	.024	-.077	2
3	.126	.110	.106	.132		.121	.161	.132	.058	-.088	-.099	3
4	.122	.091	.113	.122		.143	.152	.152	-.037	-.095	-.094	4
5	.101	.077	.086	.101		.118	.128	.141	-.066	-.201	-.122	5
6	.080	.068	.072	.081		.102	.109	.117	-.234		-.299	6
7	.073	.063	.063	.067		.085	.089	.110	-.208			7
8	.065	.047	.035	.047		.055	.066	.077				8
9	.058	.028	.025	.029		.043	.055	.072				9
10	.052	.035		.031		.043	.043	.010				10
11	.050	.042		.035		.041						11
12	.052	.049		.044		.046	.049	-.011				12
13	.060	.054	.052	.046		.045	.049	-.007				13
14	.054	.049	.051	.047		.053	.049	.131				14
15	.043	.018	.024	.020		.009	.018	-.104				15
16	.012	-.011	-.042	-.028		-.058	-.036	.105				16
17						-.065	-.048					17
18	-.018	-.054	-.051	-.070		.003	-.035	-.251				18
19	-.032	-.088	-.089	-.109		-.137	-.158	-.218				19
20	-.035	-.105	-.111	-.087		-.152	-.145	-.205				20
21	-.095	-.093	-.109	-.113		-.141	-.142	-.215				21
22	-.072	-.069	-.107	-.100		-.145	-.148	-.203				22

Table16 Continued

Pressure coefficients on swept wing

Configuration 7 M= 1.61 R=3.6 x 10^6

Orif	Station 1	2	3	4	24	5	6	7	8	9	10	Orif
					α= 0		δ= -26.1					
1	.876	.828	.733	.691		.738	.610	.819	.434	.663	-.246	1
2	.115	.095	.121	.141		.165	.157	.089	.695	.428	.301	2
3	.063	.041	.051	.076		.070	.078	-.013	.400	.303	.185	3
4	.068	.022	.028	.024		.027	.040	.002	.326	.257	.094	4
5	.046	.011	.009	.013		.013	.020	.006	.251	.307	.126	5
6	.029	.008	.005	-.004		.007	.004	-.008	.436		-.052	6
7	.021	.008	-.005	-.012		-.005	-.007	.095	.250			7
8	.022	-.008	-.027	-.027		-.026	-.021	.062				8
9	.012	-.025	-.031	-.040		-.040	-.026	.024				9
10	.001	-.019		-.035		-.039	-.039	.042				10
11	.005	-.012		-.034		-.035						11
12	.008	-.002		-.025		-.030	-.035	.205				12
13	-.004	.003	-.013	-.023		-.030	-.035	.307				13
14	.004	-.003	-.009	-.023		-.026	.132	.469				14
15	-.007	-.035	-.033	-.041		-.041	.295	.454				15
16	-.027	-.059	-.080	-.045		.107	.304	.619				16
17						.179	.268					17
18	-.067	-.095	-.098	-.008		.261	.345	.362				18
19	-.064	-.128	-.131	-.104		.641	.600	.452				19
20	-.064	-.145	-.155	-.251		.577	.759	.425				20
21	-.145	-.133	-.148	-.257		.506	.726	.354				21
22	-.094	-.093	-.148	-.202		.426	.550	.216				22
					α= 0		δ= -17.5					
1	.881	.829	.732	.695		.740	.617	.822	.713	.441	-.025	1
2	.117	.097	.125	.147		.173	.161	.089	.486	.226	.154	2
3	.064	.044	.056	.078		.073	.081	-.018	.173	.089	.071	3
4	.070	.025	.033	.030		.032	.042	.001	.115	.048	-.010	4
5	.049	.014	.011	.017		.018	.023	.029	.099	.051	-.018	5
6	.032	.010	.007	.002		.012	.006	.109	.195		-.190	6
7	.025	.010	-.002	-.006		.001	-.007	.067	.126			7
8	.023	-.007	-.024	-.021		-.027	-.021	.038				8
9	.013	-.021	-.028	-.037		-.038	-.025	.046				9
10	.007	-.016		-.032		-.037	-.039	.003				10
11	.007	-.008		-.030		-.035						11
12	.008	.000		-.021		-.028	-.033	-.058				12
13	-.003	.007	-.009	-.018		-.028	-.034	-.055				13
14	.005	.001	-.005	-.018		-.024	-.036	.029				14
15	-.004	-.030	-.030	-.035		-.054	.006	.018				15
16	-.026	-.053	-.078	-.042		.019	.110	.286				16
17						.061	.128					17
18	-.062	-.094	-.095	-.018		.152	.208	.070				18
19	-.064	-.125	-.127	-.122		.301	.299	.201				19
20	-.068	-.141	-.151	-.118		.282	.320	.185				20
21	-.135	-.130	-.146	-.234		.248	.336	.140				21
22	-.091	-.091	-.146	-.189		.202	.296	.163				22
					α= 0		δ= - 9.0					
1	.880	.825	.732	.694		.735	.626	.831	.883	.251	.258	1
2	.115	.096	.124	.149		.174	.168	.090	.287	.109	.037	2
3	.066	.042	.052	.078		.073	.086	.003	.122	.003	-.022	3
4	.069	.023	.030	.031		.032	.046	.088	.055	-.030	-.009	4
5	.049	.014	.011	.016		.019	.028	.104	.064	-.109	-.038	5
6	.032	.008	.007	.000		.013	.010	.085	-.059		-.195	6
7	.025	.009	-.001	-.006		.004	-.001	.077	-.049			7
8	.023	-.007	-.023	-.022		-.022	-.014	.034				8
9	.012	-.023	-.027	-.035		-.035	-.020	.016				9
10	.007	-.018		-.031		-.035	-.034	-.022				10
11	.007	-.009		-.030		-.030						11
12	.007	.001		-.021		-.023	-.030	-.067				12
13	-.003	.004	-.007	-.019		-.024	-.029	-.039				13
14	.005	-.001	-.005	-.018		-.021	-.031	.064				14
15	-.007	-.031	-.029	-.035		-.052	-.042	-.066				15
16	-.030	-.050	-.081	-.062		-.031	-.007	.184				16
17						-.005	-.006					17
18	-.060	-.095	-.096	-.070		.052	.056	-.088				18
19	-.066	-.128	-.128	-.122		.046	.022	-.041				19
20	-.070	-.142	-.153	-.096		.033	.031	-.032				20
21	-.132	-.132	-.147	-.151		.024	.045	-.050				21
22	-.091	-.094	-.146	-.160		.002	.033	-.052				22

Table16 Continued

Pressure coefficients on swept wing

Configuration 7 M=1.61 R=3.6 x 10^6

Orif	Station 1	2	3	4	24	5	6	7	8	9	10	Orif
					α= 0		δ= - 4.7					
1	.879	.825	.733	.698		.736	.631	.838	.931	.151	.408	1
2	.116	.099	.129	.154		.178	.172	.100	.162	.053	.007	2
3	.065	.045	.058	.081		.077	.089	.063	.056	-.025	-.007	3
4	.069	.026	.035	.034		.035	.051	.090	-.015	-.038	.001	4
5	.049	.015	.015	.020		.022	.033	.077	-.020	-.128	-.022	5
6	.033	.011	.010	.004		.018	.016	.055	-.111		-.187	6
7	.025	.012	.001	-.004		.005	.002	.062	-.122			7
8	.025	-.006	-.021	-.019		-.019	-.011	.028				8
9	.014	-.021	-.025	-.034		-.030	-.014	.012				9
10	.009	-.015		-.029		-.029	-.029	-.036				10
11	.007	-.006		-.026		-.026						11
12	.008	.002		-.018		-.021	-.023	-.069				12
13	.000	.007	-.006	-.015		-.020	-.023	-.058				13
14	.006	.003	-.003	-.015		-.018	-.024	.057				14
15	-.004	-.028	-.025	-.034		-.049	-.041	-.085				15
16	-.030	-.045	-.078	-.063		-.049	-.025	.169				16
17						-.021	-.021					17
18	-.058	-.091	-.092	-.082		.005	-.004	-.119				18
19	-.067	-.123	-.126	-.124		-.063	-.085	-.105				19
20	-.069	-.138	-.148	-.117		-.075	-.079	-.104				20
21	-.130	-.127	-.143	-.137		-.076	-.075	-.125				21
22	-.090	-.091	-.144	-.133		-.089	-.089	-.116				22
					α= 0		δ= - 0.4					
1	.878	.828	.733	.696		.737	.634	.840	.794	.085	.579	1
2	.114	.095	.126	.151		.179	.171	.224	.072	.019	.030	2
3	.063	.043	.056	.079		.077	.089	.056	.041	-.042	.002	3
4	.068	.025	.035	.033		.035	.052	.035	-.035	-.040	.000	4
5	.048	.013	.012	.019		.021	.030	.049	-.057	-.141	-.020	5
6	.031	.010	.007	.003		.016	.014	.024	-.144		-.180	6
7	.025	.011	.000	-.004		.003	.001	.022	-.169			7
8	.023	-.005	-.023	-.020		-.021	-.012	-.009				8
9	.012	-.021	-.027	-.034		-.033	-.017	-.016				9
10	.007	-.016		-.029		-.032	-.031	-.033				10
11	.005	-.008		-.028		-.028						11
12	.007	.000		-.019		-.022	-.026	-.070				12
13	.001	.005	-.007	-.016		-.021	-.025	-.086				13
14	.006	.002	-.005	-.016		-.019	-.027	.007				14
15	-.006	-.028	-.026	-.035		-.050	-.042	-.104				15
16	-.036	-.046	-.081	-.066		-.058	-.036	.163				16
17						-.034	-.032					17
18	-.060	-.092	-.092	-.091		-.046	-.065	-.161				18
19	-.068	-.124	-.126	-.139		-.151	-.164	-.148				19
20	-.071	-.141	-.148	-.148		-.162	-.164	-.157				20
21	-.130	-.129	-.145	-.154		-.160	-.163	-.171				21
22	-.091	-.092	-.146	-.137		-.164	-.165	-.164				22
					α= 0		δ= 3.9					
1	.882	.829	.734	.695		.732	.637	.840	1.038	.048	.674	1
2	.116	.098	.128	.149		.176	.172	.345	.054	-.006	.031	2
3	.063	.044	.057	.078		.072	.087	.118	.006	-.044	.002	3
4	.070	.027	.034	.029		.032	.052	.050	-.079	-.038	-.007	4
5	.048	.016	.012	.016		.019	.031	.033	-.075	-.142	-.029	5
6	.033	.015	.007	.002		.012	.015	-.007	-.177		-.183	6
7	.026	.009	.000	-.005		.002	.003	-.014	-.218			7
8	.024	-.005	-.023	-.021		-.021	-.010	-.053				8
9	.014	-.021	-.028	-.038		-.034	-.015	-.061				9
10	.007	-.016		-.031		-.031	-.030	-.079				10
11	.006	-.007		-.031		-.028						11
12	.007	.000		-.021		-.022	-.024	-.091				12
13	.008	.005	-.007	-.017		-.022	-.023	-.106				13
14	.008	.003	-.003	-.018		-.018	-.023	-.009				14
15	-.002	-.027	-.028	-.038		-.051	-.039	-.102				15
16	-.035	-.044	-.083	-.068		-.057	-.031	.165				16
17						-.031	-.029					17
18	-.058	-.091	-.093	-.092		-.098	-.118	-.189				18
19	-.067	-.123	-.127	-.160		-.227	-.227	-.177				19
20	-.071	-.141	-.151	-.171		-.234	-.235	-.203				20
21	-.128	-.129	-.145	-.178		-.234	-.232	-.224				21
22	-.091	-.092	-.146	-.158		-.231	-.226	-.204				22

Table16 Continued

Pressure coefficients on swept wing

Configuration 7 M=1.61 R=3.6 x 10^6

Orif	Station 1	2	3	4	24	5	6	7	8	9	10	Orif
					α= 0		δ= 8.2					
1	.878	.830	.731	.699		.736	.640	.841	1.073	.011	.688	1
2	.113	.097	.128	.155		.183	.176	.091	.014	-.024	-.022	2
3	.063	.045	.056	.083		.077	.090	.218	-.043	-.039	-.034	3
4	.068	.028	.034	.035		.038	.056	.186	-.126	-.055	-.022	4
5	.047	.016	.015	.021		.023	.034	.160	-.076	-.159	-.053	5
6	.030	.012	.009	.006		.020	.018	.089	-.222		-.215	6
7	.025	.011	.003	-.001		.008	.005	.041	-.278			7
8	.022	-.003	-.022	-.019		-.018	-.007	-.073				8
9	.012	-.020	-.025	-.034		-.030	-.012	-.185				9
10	.006	-.014		-.024		-.031	-.028	-.154				10
11	.004	-.007		-.024		-.025						11
12	.006	.002		-.016		-.021	-.021	-.166				12
13	.009	.007	-.005	-.013		-.021	-.022	-.172				13
14	.009	.004	-.001	-.014		-.018	-.021	-.078				14
15	-.002	-.025	-.024	-.033		-.049	-.035	-.126				15
16	-.035	-.041	-.079	-.061		-.043	-.020	.148				16
17						-.020	-.017					17
18	-.058	-.089	-.091	-.082		-.158	-.180	-.218				18
19	-.069	-.121	-.124	-.167		-.285	-.282	-.224				19
20	-.073	-.140	-.148	-.175		-.290	-.291	-.255				20
21	-.128	-.128	-.142	-.197		-.292	-.290	-.279				21
22	-.091	-.093	-.143	-.173		-.260	-.268	-.267				22
					α= 0		δ= 16.8					
1	.881	.828	.733	.699		.733	.649	.845	1.128	-.078	.641	1
2	.117	.099	.130	.158		.185	.181	.096	-.109	-.102	-.280	2
3	.065	.046	.058	.084		.078	.092	-.019	-.140	-.073	-.252	3
4	.070	.027	.035	.036		.039	.059	.015	-.180	-.134	-.163	4
5	.049	.017	.015	.024		.026	.040	.355	-.219	-.234	-.158	5
6	.034	.013	.010	.005		.023	.025	.274	-.298		-.255	6
7	.027	.014	.001	.000		.010	.011	.270	-.349			7
8	.022	.000	-.021	-.016		-.015	-.003	.216				8
9	.013	-.019	-.026	-.031		-.027	-.007	.142				9
10	.007	-.013		-.024		-.025	-.021	.039				10
11	.004	-.004		-.025		-.021						11
12	.006	.005		-.012		-.016	-.016	-.284				12
13	.010	.009	-.006	-.011		-.016	-.015	-.411				13
14	.010	.007	-.001	-.011		-.010	-.017	-.223				14
15	.000	-.024	-.024	-.030		-.044	-.002	-.213				15
16	-.034	-.031	-.077	-.046		.003	.100	.113				16
							.113					
18	-.058	-.087	-.089	-.056		-.260	-.279	-.307				18
19	-.069	-.120	-.123	-.196		-.366	-.355	-.313				19
20	-.071	-.136	-.146	-.209		-.369	-.365	-.344				20
21	-.124	-.125	-.140	-.221		-.372	-.365	-.355				21
22	-.090	-.091	-.140	-.185		-.235	-.258	-.287				22
					α= 0		δ= 25.5					
1	.879	.827	.731	.699		.731	.657	.852	1.183	-.231	.443	1
2	.116	.099	.132	.163		.189	.188	.096	-.210	-.184	-.396	2
3	.066	.045	.058	.084		.080	.096	-.020	-.226	-.189	-.370	3
4	.070	.028	.039	.038		.042	.064	.017	-.256	-.230	-.276	4
5	.049	.017	.016	.027		.029	.043	.018	-.252	-.312	-.187	5
6	.035	.012	.013	.009		.026	.029	.118	-.375		-.284	6
7	.027	.013	.005	.004		.013	.014	.473	-.318			7
8	.023	-.001	-.019	-.013		-.011	.001	.419				8
9	.012	-.018	-.021	-.029		-.022	-.003	.348				9
10	.009	-.013		-.022		-.022	-.020	.276				10
11	.007	-.006		-.021		-.020						11
12	.007	.005		-.011		-.014	-.012	.178				12
13	.012	.010	-.001	-.010		-.014	-.011	.053				13
14	.010	.007	.003	-.009		-.007	-.011	-.383				14
15	.002	-.022	-.020	-.028		-.007	.215	-.370				15
16	-.032	-.024	-.070	-.046		.146	.249	.047				16
17						.161	.246					17
18	-.057	-.084	-.088	-.046		-.349	-.358	-.387				18
19	-.068	-.118	-.118	-.223		-.409	-.383	-.384				19
20	-.069	-.135	-.143	-.236		-.376	-.364	-.389				20
21	-.123	-.125	-.138	-.247		-.350	-.344	-.383				21
22	-.091	-.091	-.139	-.189		-.317	-.301	-.270				22

Table16 Continued

Pressure coefficients on swept wing

Configuration 7 M=1.61 R=3.6 x 10^6

Orif	Station 1	2	3	4	24	5	6	7	8	9	10	Orif
					α= 3		δ= − 0.2					
1	.896	.821	.725	.648		.753	.480	.866	.840	.001	.664	1
2	.067	-.014	-.021	-.025		-.021	-.025	.028	.013	-.056	-.006	2
3	-.006	-.016	-.030	-.016		-.019	-.019	-.030	-.041	-.065	-.026	3
4	.017	-.037	-.041	-.051		-.044	-.039	-.088	-.086	-.067	-.073	4
5	-.001	-.049	-.055	-.057		-.059	-.048	-.082	-.072	-.167	-.055	5
6	-.017	-.046	-.064	-.070		-.067	-.063	-.096	-.146		-.219	6
7	-.023	-.044	-.067	-.074		-.077	-.077	-.087	-.179			7
8	-.028	-.058	-.083	-.091		-.094	-.093	-.099				8
9	-.037	-.071	-.084	-.102		-.105	-.097	-.103				9
10	-.042	-.065		-.098		-.101	-.105	-.100				10
11	-.046	-.060		-.093		-.099						11
12	-.045	-.049		-.083		-.096	-.100	-.146				12
13	-.044	-.045	-.059	-.081		-.096	-.101	-.168				13
14	-.041	-.048	-.056	-.076		-.090	-.104	-.072				14
15	-.049	-.073	-.077	-.091		-.117	-.108	-.126				15
16	-.078	-.077	-.119	-.111		-.079	-.053	.165				16
17						-.046	-.043					17
18	-.101	-.132	-.133	-.119		-.108	-.125	-.142				18
19	-.110	-.160	-.165	-.168		-.198	-.196	-.149				19
20	-.109	-.179	-.185	-.230		-.194	-.198	-.176				20
21	-.162	-.168	-.183	-.221		-.197	-.196	-.178				21
22	-.107	-.097	-.174	-.209		-.189	-.160	-.162				22
					α= 6		δ= -27.3					
1	.900	.662	.620	.539		.767	.279	.949	.612	.649	-.141	1
2	.010	-.136	-.154	-.168		-.179	-.184	-.152	.779	.378	.243	2
3	-.080	-.132	-.146	-.152		-.160	-.173	-.151	.499	.095	.078	3
4	-.044	-.113	-.163	-.169		-.174	-.182	-.171	.286	-.140	-.033	4
5	-.057	-.119	-.170	-.173		-.180	-.186	-.169	-.124	-.026	-.049	5
6	-.073	-.111	-.168	-.181		-.179	-.187	-.146	-.089		-.183	6
7	-.077	-.106	-.148	-.188		-.187	-.193	-.184	-.070			7
8	-.086	-.115	-.158	-.198		-.202	-.202	-.232				8
9	-.091	-.128	-.159	-.210		-.208	-.202	-.304				9
10	-.096	-.119		-.202		-.208	-.210	-.311				10
11	-.098	-.117		-.193		-.204						11
12	-.096	-.107		-.171		-.201	-.204	-.279				12
13	-.098	-.103	-.128	-.162		-.202	.010	-.218				13
14	-.094	-.104	-.125	-.157		-.190	.092	-.150				14
15	-.100	-.126	-.140	-.166		.055	.113	-.106				15
16	-.124	-.120	-.166	-.141		.067	.117	.154				16
17						.076	.120					17
18	-.150	-.178	-.188	-.097		.067	.122	-.124				18
19	-.162	-.203	-.215	-.197		.188	.141	-.125				19
20	-.154	-.221	-.232	-.292		.298	.216	-.106				20
21	-.206	-.214	-.230	-.292		.351	.282	-.101				21
22	-.130	-.079	-.177	-.244		.310	.243	-.142				22
					α= 6		δ= -18.2					
1	.899	.661	.619	.542		.771	.282	.943	.866	.321	.146	1
2	.007	-.136	-.154	-.166		-.175	-.181	-.147	.530	.175	.038	2
3	-.080	-.132	-.146	-.151		-.157	-.172	-.144	.259	-.138	-.008	3
4	-.046	-.113	-.162	-.168		-.170	-.179	-.164	-.024	-.190	-.047	4
5	-.060	-.120	-.168	-.171		-.176	-.184	-.118	-.321	-.218	-.064	5
6	-.074	-.113	-.167	-.179		-.175	-.185	-.185	-.158		-.295	6
7	-.078	-.106	-.146	-.187		-.183	-.191	-.244	-.114			7
8	-.085	-.116	-.155	-.194		-.199	-.201	-.308				8
9	-.093	-.128	-.156	-.208		-.207	-.201	-.331				9
10	-.097	-.120		-.200		-.206	-.209	-.338				10
11	-.099	-.117		-.190		-.203						11
12	-.097	-.108		-.168		-.202	-.202	-.361				12
13	-.098	-.103	-.125	-.160		-.202	-.202	-.366				13
14	-.096	-.103	-.122	-.154		-.194	-.205	-.295				14
15	-.102	-.125	-.136	-.164		-.112	-.014	-.250				15
16	-.127	-.118	-.164	-.157		-.013	.023	.090				16
17						-.019	.010					17
18	-.150	-.177	-.187	-.117		-.009	.012	-.215				18
19	-.162	-.203	-.212	-.195		.029	.024	-.177				19
20	-.157	-.220	-.230	-.241		.046	.063	-.146				20
21	-.204	-.212	-.228	-.250		.056	.088	-.134				21
22	-.132	-.079	-.178	-.263		.036	.035	-.141				22

Table 16 Continued

Pressure coefficients on swept wing

Configuration 7 M= 1.61 R= 3.6 x 10^6

Orif	Station 1	2	3	4	24	5	6	7	8	9	10	Orif
					α= 6		δ= - 9.2					
1	.901	.662	.620	.544		.768	.285	.937	.971	.038	.511	1
2	.010	-.135	-.152	-.165		-.174	-.179	-.142	.123	-.102	-.028	2
3	-.078	-.132	-.144	-.149		-.156	-.170	-.114	-.086	-.185	-.064	3
4	-.042	-.111	-.161	-.169		-.171	-.177	-.162	-.294	-.160	-.135	4
5	-.057	-.119	-.169	-.169		-.174	-.182	-.166	-.165	-.250	-.173	5
6	-.072	-.110	-.167	-.179		-.174	-.183	-.231	-.212		-.331	6
7	-.077	-.104	-.147	-.185		-.184	-.191	-.280	-.196			7
8	-.082	-.113	-.156	-.193		-.199	-.200	-.303				8
9	-.091	-.127	-.157	-.208		-.207	-.200	-.306				9
10	-.093	-.118		-.200		-.206	-.207	-.275				10
11	-.097	-.116		-.189		-.203						11
12	-.095	-.106		-.167		-.200	-.201	-.282				12
13	-.094	-.101	-.126	-.160		-.202	-.201	-.296				13
14	-.092	-.101	-.123	-.154		-.194	-.204	-.205				14
15	-.098	-.123	-.137	-.163		-.208	-.180	-.193				15
16	-.125	-.116	-.165	-.164		-.097	-.082	.089				16
17						-.077	-.073					17
18	-.147	-.175	-.186	-.150		-.115	-.129	-.225				18
19	-.160	-.202	-.212	-.197		-.155	-.177	-.205				19
20	-.159	-.217	-.231	-.247		-.157	-.161	-.196				20
21	-.199	-.211	-.228	-.257		-.149	-.158	-.205				21
22	-.132	-.080	-.181	-.265		-.146	-.172	-.194				22
					α= 6		δ= - 4.7					
1	.900	.660	.619	.544		.765	.290	.938	.970	-.114	.649	1
2	.010	-.137	-.153	-.164		-.173	-.174	-.097	-.182	-.195	-.116	2
3	-.080	-.132	-.145	-.149		-.154	-.165	-.141	-.285	-.172	-.155	3
4	-.045	-.112	-.161	-.165		-.169	-.173	-.197	-.229	-.145	-.192	4
5	-.058	-.120	-.168	-.169		-.174	-.177	-.193	-.177	-.274	-.233	5
6	-.075	-.112	-.168	-.179		-.174	-.177	-.195	-.254		-.365	6
7	-.078	-.106	-.148	-.184		-.180	-.186	-.176	-.260			7
8	-.084	-.115	-.158	-.195		-.196	-.195	-.195				8
9	-.091	-.128	-.158	-.208		-.204	-.194	-.227				9
10	-.093	-.118		-.199		-.202	-.202	-.205				10
11	-.098	-.115		-.189		-.200						11
12	-.097	-.106		-.167		-.196	-.196	-.251				12
13	-.096	-.102	-.126	-.161		-.198	-.195	-.288				13
14	-.092	-.102	-.123	-.154		-.190	-.200	-.157				14
15	-.098	-.124	-.137	-.163		-.208	-.183	-.180				15
16	-.127	-.115	-.165	-.169		-.114	-.092	.091				16
17						-.082	-.079					17
18	-.148	-.174	-.186	-.162		-.163	-.184	-.242				18
19	-.163	-.202	-.212	-.202		-.234	-.255	-.250				19
20	-.159	-.219	-.230	-.261		-.239	-.248	-.249				20
21	-.201	-.212	-.228	-.278		-.227	-.246	-.266				21
22	-.132	-.081	-.181	-.207		-.194	-.239	-.247				22
					α= 6		δ= - 0.2					
1	.903	.661	.622	.545		.768	.290	.933	.864	-.143	.667	1
2	.010	-.134	-.152	-.164		-.173	-.174	-.176	-.126	-.150	-.136	2
3	-.080	-.129	-.144	-.147		-.153	-.165	-.224	-.145	-.139	-.130	3
4	-.043	-.110	-.161	-.166		-.168	-.172	-.230	-.172	-.128	-.199	4
5	-.056	-.118	-.168	-.169		-.173	-.176	-.237	-.132	-.250	-.283	5
6	-.070	-.109	-.166	-.178		-.174	-.179	-.236	-.218		-.331	6
7	-.077	-.104	-.146	-.186		-.181	-.188	-.233	-.255			7
8	-.086	-.113	-.155	-.192		-.197	-.195	-.236				8
9	-.090	-.125	-.155	-.207		-.203	-.196	-.231				9
10	-.091	-.118		-.198		-.202	-.202	-.161				10
11	-.097	-.113		-.188		-.199						11
12	-.094	-.104		-.166		-.197	-.196	-.262				12
13	-.094	-.099	-.123	-.160		-.198	-.196	-.284				13
14	-.091	-.101	-.122	-.152		-.189	-.199	-.180				14
15	-.097	-.122	-.136	-.160		-.208	-.186	-.172				15
16	-.126	-.115	-.165	-.169		-.120	-.100	.115				16
17						-.084	-.085					17
18	-.146	-.175	-.183	-.166		-.194	-.206	-.205				18
19	-.159	-.200	-.211	-.203		-.275	-.277	-.228				19
20	-.156	-.217	-.230	-.322		-.272	-.280	-.247				20
21	-.199	-.209	-.227	-.281		-.266	-.279	-.255				21
22	-.132	-.080	-.180	-.229		-.188	-.230	-.239				22

Table 16 Continued

Pressure coefficients on swept wing

Configuration 7 M= 1.61 R= 3.6 x 10^6

Orif	Station 1	2	3	4	24	5	6	7	8	9	10	Orif
					α= 6		δ= 4.3					
1	.901	.660	.620	.548		.767	.294	.932	1.089	-.177	.680	1
2	.009	-.136	-.151	-.161		-.171	-.171	-.076	-.129	-.162	-.211	2
3	-.080	-.131	-.143	-.146		-.151	-.161	.122	-.178	-.169	-.206	3
4	-.043	-.112	-.159	-.165		-.166	-.169	-.171	-.193	-.154	-.282	4
5	-.057	-.118	-.167	-.167		-.173	-.174	-.415	-.159	-.273	-.332	5
6	-.074	-.110	-.166	-.176		-.172	-.175	-.396	-.249		-.363	6
7	-.077	-.104	-.146	-.183		-.180	-.186	-.317	-.289			7
8	-.086	-.114	-.154	-.191		-.196	-.193	-.322				8
9	-.091	-.125	-.155	-.205		-.202	-.192	-.262				9
10	-.091	-.118		-.197		-.201	-.202	-.100				10
11	-.096	-.114		-.189		-.199						11
12	-.096	-.104		-.165		-.195	-.194	-.247				12
13	-.094	-.100	-.122	-.159		-.197	-.195	-.294				13
14	-.091	-.099	-.118	-.151		-.189	-.198	-.215				14
15	-.099	-.122	-.135	-.160		-.207	-.178	-.199				15
16	-.127	-.114	-.163	-.167		-.115	-.086	.095				16
17						-.077	-.077					17
18	-.146	-.172	-.183	-.166		-.230	-.239	-.243				18
19	-.159	-.199	-.208	-.234		-.316	-.313	-.253				19
20	-.157	-.216	-.228	-.322		-.313	-.317	-.279				20
21	-.200	-.209	-.225	-.279		-.308	-.317	-.290				21
22	-.132	-.081	-.179	-.230		-.189	-.225	-.272				22
					α= 6		δ= 8.7					
1	.901	.661	.621	.548		.768	.295	.930	1.117	-.217	.675	1
2	.007	-.137	-.152	-.163		-.170	-.169	-.128	-.160	-.179	-.278	2
3	-.080	-.132	-.144	-.146		-.150	-.160	-.081	-.194	-.176	-.296	3
4	-.044	-.111	-.160	-.164		-.165	-.167	.168	-.244	-.186	-.322	4
5	-.057	-.118	-.167	-.165		-.171	-.173	.217	-.195	-.300	-.346	5
6	-.073	-.111	-.167	-.174		-.172	-.173	.090	-.277		-.385	6
7	-.077	-.104	-.146	-.182		-.178	-.184	-.132	-.327			7
8	-.087	-.113	-.155	-.191		-.196	-.191	-.309				8
9	-.091	-.126	-.156	-.205		-.202	-.191	-.357				9
10	-.091	-.118		-.195		-.201	-.200	-.350				10
11	-.097	-.113		-.187		-.200						11
12	-.096	-.105		-.165		-.195	-.194	-.346				12
13	-.094	-.101	-.122	-.158		-.197	-.193	-.344				13
14	-.091	-.101	-.120	-.150		-.189	-.197	-.260				14
15	-.098	-.123	-.134	-.160		-.204	-.158	-.238				15
16	-.127	-.114	-.165	-.165		-.095	-.057	.075				16
17						-.064	-.054					17
18	-.146	-.175	-.185	-.160		-.268	-.272	-.277				18
19	-.159	-.201	-.210	-.248		-.354	-.341	-.286				19
20	-.156	-.219	-.229	-.290		-.352	-.348	-.312				20
21	-.196	-.211	-.226	-.275		-.344	-.349	-.322				21
22	-.131	-.081	-.180	-.233		-.215	-.230	-.299				22
					α= 6		δ= 17.3					
1	.901	.662	.624	.549		.766	.298	.922	1.149	-.281	.585	1
2	.011	-.135	-.147	-.160		-.166	-.167	-.126	-.210	-.232	-.374	2
3	-.078	-.129	-.141	-.144		-.146	-.158	-.118	-.232	-.218	-.385	3
4	-.041	-.108	-.157	-.163		-.162	-.166	-.152	-.331	-.264	-.341	4
5	-.056	-.117	-.163	-.165		-.169	-.171	-.081	-.286	-.361	-.350	5
6	-.073	-.107	-.164	-.175		-.170	-.171	.430	-.344		-.392	6
7	-.077	-.102	-.142	-.180		-.177	-.182	.374	-.347			7
8	-.086	-.111	-.152	-.189		-.193	-.191	.322				8
9	-.090	-.123	-.153	-.203		-.201	-.189	.244				9
10	-.090	-.116		-.195		-.199	-.198	.158				10
11	-.096	-.112		-.186		-.198						11
12	-.094	-.104		-.164		-.193	-.191	-.212				12
13	-.093	-.098	-.121	-.157		-.195	-.191	-.465				13
14	-.090	-.097	-.118	-.151		-.188	-.196	-.408				14
15	-.096	-.119	-.132	-.160		-.160	.048	-.350				15
16	-.125	-.110	-.161	-.159		-.018	.071	.048				16
17						-.007	.033					17
18	-.144	-.172	-.181	-.148		-.339	-.334	-.342				18
19	-.159	-.196	-.206	-.263		-.397	-.376	-.361				19
20	-.157	-.214	-.226	-.291		-.359	-.350	-.372				20
21	-.195	-.207	-.224	-.280		-.331	-.331	-.366				21
22	-.129	-.078	-.180	-.218		-.286	-.276	-.299				22

Table 16 Continued

Pressure coefficients on swept wing

Configuration 7 M = 1.61 R = 3.6 x 10^6

Orif	Station 1	2	3	4	24	5	6	7	8	9	10	Orif
					α = 6		δ = 25.7					
1	.902	.664	.624	.551		.768	.303	.913	1.168	-.367	.364	1
2	.011	-.134	-.148	-.160		-.163	-.163	-.122	-.277	-.320	-.419	2
3	-.078	-.129	-.140	-.143		-.146	-.155	-.113	-.292	-.290	-.423	3
4	-.041	-.108	-.157	-.161		-.159	-.163	-.154	-.383	-.329	-.358	4
5	-.055	-.118	-.165	-.163		-.165	-.168	-.138	-.347	-.389	-.361	5
6	-.072	-.108	-.163	-.173		-.166	-.167	-.016	-.394		-.409	6
7	-.076	-.103	-.143	-.179		-.174	-.179	.234	-.363			7
8	-.085	-.110	-.152	-.189		-.190	-.187	.549				8
9	-.090	-.124	-.153	-.202		-.198	-.187	.543				9
10	-.090	-.117		-.193		-.196	-.197	.523				10
11	-.096	-.113		-.183		-.196						11
12	-.094	-.103		-.161		-.191	-.190	.572				12
13	-.092	-.098	-.121	-.155		-.193	-.191	.315				13
14	-.091	-.095	-.116	-.147		-.185	-.123	-.416				14
15	-.096	-.119	-.133	-.157		-.048	.120	-.411				15
16	-.127	-.109	-.160	-.157		.029	.118	.020				16
17						.091	.178					17
18	-.145	-.171	-.182	-.141		-.397	-.382	-.397				18
19	-.160	-.199	-.207	-.272		-.387	-.365	-.412				19
20	-.159	-.214	-.227	-.295		-.359	-.338	-.422				20
21	-.194	-.206	-.222	-.292		-.348	-.335	-.399				21
22	-.127	-.081	-.179	-.212		-.328	-.314	-.338				22
					α = 9		δ = -0.2					
1	.943	.416	.438	.373		.745	.142	.959	.906	-.116	.593	1
2	-.045	-.220	-.238	-.255		-.266	-.279	-.333	-.089	-.116	-.130	2
3	-.138	-.218	-.231	-.241		-.247	-.263	-.349	-.097	-.157	-.182	3
4	-.091	-.211	-.244	-.249		-.254	-.260	-.328	-.148	-.192	-.248	4
5	-.104	-.170	-.248	-.252		-.253	-.262	-.320	-.190	-.257	-.283	5
6	-.119	-.167	-.250	-.255		-.254	-.263	-.321	-.223		-.317	6
7	-.123	-.155	-.248	-.258		-.258	-.270	-.316	-.242			7
8	-.132	-.162	-.257	-.262		-.269	-.270	-.319				8
9	-.136	-.172	-.236	-.273		-.272	-.270	-.315				9
10	-.138	-.163		-.266		-.272	-.273	-.223				10
11	-.141	-.160		-.268		-.269						11
12	-.140	-.151		-.265		-.265	-.266	-.331				12
13	-.141	-.146	-.175	-.262		-.265	-.264	-.357				13
14	-.138	-.144	-.170	-.254		-.260	-.266	-.254				14
15	-.142	-.164	-.184	-.250		-.267	-.217	-.241				15
16	-.165	-.157	-.206	-.248		-.154	-.130	.087				16
17						-.109	-.111					17
18	-.185	-.210	-.226	-.222		-.221	-.210	-.229				18
19	-.198	-.234	-.250	-.273		-.263	-.233	-.242				19
20	-.199	-.250	-.263	-.367		-.237	-.231	-.261				20
21	-.236	-.245	-.261	-.316		-.239	-.217	-.248				21
22	-.174	-.083	-.140	-.196		-.149	-.118	-.220				22
					α = 12		δ = -28.8					
1	.975	.256	.221	.203		.662	.000	.878	.780	.654	-.051	1
2	-.085	-.290	-.313	-.334		-.353	-.381	-.451	.806	.413	.216	2
3	-.171	-.285	-.302	-.315		-.329	-.355	-.467	.599	.064	.083	3
4	-.126	-.288	-.305	-.316		-.328	-.345	-.487	.406	-.303	-.002	4
5	-.141	-.259	-.310	-.316		-.326	-.341	-.497	-.135	-.338	-.109	5
6	-.153	-.216	-.308	-.318		-.325	-.340	-.482	-.379		-.350	6
7	-.158	-.200	-.310	-.319		-.325	-.343	-.472	-.331			7
8	-.167	-.202	-.319	-.326		-.333	-.344	-.472				8
9	-.172	-.210	-.320	-.332		-.337	-.343	-.467				9
10	-.174	-.202		-.327		-.337	-.343	-.446				10
11	-.174	-.197		-.326		-.334						11
12	-.174	-.191		-.322		-.329	-.336	-.464				12
13	-.177	-.185	-.227	-.321		-.328	-.164	-.474				13
14	-.174	-.181	-.220	-.319		-.213	-.103	-.427				14
15	-.179	-.201	-.228	-.326		-.097	-.073	-.408				15
16	-.197	-.191	-.244	-.307		-.085	-.073	.001				16
17						-.157	-.157					17
18	-.217	-.242	-.263	-.276		-.077	-.054	-.395				18
19	-.227	-.264	-.284	-.348		-.061	-.044	-.389				19
20	-.221	-.280	-.296	-.376		-.010	.004	-.359				20
21	-.268	-.275	-.292	-.394		.039	.048	-.331				21
22	-.188	-.097	-.134	-.276		.043	.032	-.304				22

Table16 Continued

Pressure coefficients on swept wing

Configuration 7 M= 1.61 R=3.6 x 10^6

Orif	Station 1	2	3	4	24	5	6	7	8	9	10	Orif
					α= 12		δ= -19.2					
1	.976	.258	.223	.206		.665	.003	.880	.952	.343	.310	1
2	-.083	-.290	-.311	-.332		-.350	-.378	-.444	.570	.096	.035	2
3	-.170	-.284	-.301	-.313		-.326	-.352	-.459	.314	-.246	.004	3
4	-.123	-.288	-.304	-.314		-.326	-.341	-.470	-.060	-.328	-.079	4
5	-.140	-.258	-.308	-.316		-.324	-.338	-.483	-.362	-.404	-.260	5
6	-.152	-.216	-.307	-.317		-.322	-.338	-.475	-.347		-.447	6
7	-.156	-.200	-.310	-.317		-.322	-.342	-.463	-.306			7
8	-.165	-.202	-.318	-.323		-.329	-.342	-.457				8
9	-.171	-.211	-.318	-.331		-.334	-.341	-.451				9
10	-.174	-.202		-.324		-.332	-.341	-.433				10
11	-.174	-.197		-.324		-.330						11
12	-.174	-.191		-.320		-.326	-.332	-.465				12
13	-.177	-.185	-.227	-.317		-.325	-.330	-.486				13
14	-.173	-.182	-.218	-.317		-.319	-.331	-.394				14
15	-.176	-.200	-.227	-.323		-.200	-.142	-.373				15
16	-.197	-.189	-.242	-.318		-.143	-.118	.012				16
17						-.203	-.146					17
18	-.216	-.243	-.260	-.285		-.155	-.159	-.354				18
19	-.226	-.264	-.281	-.361		-.174	-.174	-.346				19
20	-.219	-.280	-.294	-.422		-.187	-.150	-.331				20
21	-.267	-.275	-.291	-.347		-.178	-.141	-.311				21
22	-.189	-.096	-.132	-.260		-.160	-.151	-.286				22
					α= 12		δ= - 9.7					
1	.974	.258	.227	.209		.668	.010	.887	1.020	-.061	.627	1
2	-.084	-.289	-.308	-.331		-.349	-.373	-.438	.113	-.246	-.107	2
3	-.169	-.284	-.297	-.313		-.327	-.347	-.454	-.244	-.353	-.179	3
4	-.125	-.286	-.301	-.313		-.327	-.338	-.454	-.364	-.295	-.287	4
5	-.139	-.258	-.308	-.315		-.324	-.333	-.465	-.293	-.401	-.393	5
6	-.152	-.214	-.307	-.316		-.322	-.333	-.454	-.350		-.454	6
7	-.156	-.199	-.310	-.315		-.323	-.338	-.436	-.336			7
8	-.164	-.202	-.318	-.322		-.327	-.338	-.423				8
9	-.169	-.209	-.318	-.330		-.331	-.336	-.411				9
10	-.173	-.201		-.324		-.330	-.337	-.376				10
11	-.173	-.196		-.324		-.328						11
12	-.173	-.189		-.320		-.323	-.327	-.436				12
13	-.174	-.184	-.227	-.316		-.322	-.327	-.437				13
14	-.171	-.180	-.218	-.316		-.316	-.327	-.281				14
15	-.175	-.198	-.227	-.323		-.303	-.237	-.299				15
16	-.196	-.189	-.242	-.321		-.186	-.164	.026				16
17						-.218	-.150					17
18	-.216	-.242	-.260	-.299		-.244	-.263	-.329				18
19	-.225	-.263	-.283	-.381		-.299	-.311	-.343				19
20	-.221	-.278	-.294	-.419		-.311	-.298	-.349				20
21	-.263	-.274	-.290	-.305		-.304	-.294	-.339				21
22	-.193	-.094	-.132	-.168		-.218	-.236	-.310				22
					α= 12		δ= - 4.9					
1	.975	.259	.226	.211		.671	.010	.909	.983	-.255	.610	1
2	-.086	-.290	-.310	-.331		-.347	-.375	-.432	-.281	-.344	-.250	2
3	-.170	-.284	-.299	-.311		-.327	-.349	-.440	-.394	-.358	-.315	3
4	-.127	-.287	-.303	-.314		-.326	-.338	-.429	-.346	-.291	-.382	4
5	-.140	-.257	-.307	-.315		-.323	-.335	-.433	-.297	-.409	-.423	5
6	-.153	-.214	-.307	-.317		-.321	-.334	-.415	-.367		-.456	6
7	-.157	-.199	-.311	-.316		-.320	-.339	-.389	-.356			7
8	-.167	-.202	-.318	-.322		-.330	-.339	-.375				8
9	-.170	-.210	-.318	-.329		-.334	-.336	-.362				9
10	-.174	-.202		-.322		-.333	-.338	-.278				10
11	-.174	-.197		-.324		-.330						11
12	-.174	-.189		-.319		-.325	-.328	-.409				12
13	-.176	-.184	-.227	-.318		-.325	-.328	-.418				13
14	-.172	-.180	-.217	-.316		-.318	-.327	-.302				14
15	-.175	-.199	-.226	-.324		-.311	-.248	-.306				15
16	-.198	-.189	-.242	-.322		-.196	-.172	.020				16
17						-.208	-.149					17
18	-.216	-.241	-.260	-.304		-.285	-.309	-.351				18
19	-.226	-.264	-.283	-.396		-.345	-.360	-.362				19
20	-.221	-.278	-.294	-.417		-.349	-.345	-.376				20
21	-.263	-.274	-.291	-.304		-.338	-.334	-.365				21
22	-.196	-.096	-.132	-.157		-.234	-.252	-.324				22

Table 16 Continued

Pressure coefficients on swept wing

Configuration 7 M= 1.61 R=3.6 x 10^6

Orif	Station 1	2	3	4	24	5	6	7	8	9	10	Orif
					α= 12		δ= - 0.2					
1	.971	.257	.225	.208		.668	.014	.886	.930	-.288	.529	1
2	-.088	-.287	-.305	-.329		-.341	-.360	-.419	-.263	-.257	-.305	2
3	-.173	-.281	-.298	-.313		-.321	-.339	-.428	-.251	-.253	-.346	3
4	-.128	-.284	-.301	-.313		-.321	-.328	-.411	-.261	-.261	-.351	4
5	-.141	-.256	-.307	-.313		-.320	-.327	-.394	-.236	-.346	-.380	5
6	-.154	-.213	-.307	-.315		-.318	-.327	-.393	-.316		-.390	6
7	-.158	-.199	-.310	-.315		-.319	-.331	-.382	-.296			7
8	-.168	-.202	-.318	-.320		-.325	-.329	-.383				8
9	-.172	-.208	-.316	-.329		-.327	-.327	-.369				9
10	-.174	-.201		-.323		-.325	-.329	-.242				10
11	-.174	-.195		-.321		-.323						11
12	-.174	-.188		-.317		-.318	-.321	-.365				12
13	-.176	-.185	-.228	-.317		-.318	-.322	-.379				13
14	-.173	-.179	-.217	-.314		-.313	-.323	-.288				14
15	-.175	-.197	-.227	-.319		-.309	-.247	-.303				15
16	-.198	-.189	-.244	-.319		-.193	-.171	.039				16
17						-.186	-.136					17
18	-.216	-.241	-.261	-.302		-.290	-.298	-.312				18
19	-.226	-.263	-.283	-.401		-.353	-.339	-.328				19
20	-.223	-.279	-.294	-.423		-.345	-.343	-.346				20
21	-.263	-.273	-.292	-.332		-.299	-.299	-.315				21
22	-.197	-.096	-.134	-.192		-.228	-.207	-.256				22
					α= 12		δ= 4.4					
1	.974	.257	.226	.210		.671	.014	.887	1.085	-.345	.487	1
2	-.085	-.288	-.309	-.333		-.347	-.371	-.303	-.294	-.294	-.394	2
3	-.171	-.283	-.300	-.313		-.324	-.347	.117	-.305	-.297	-.416	3
4	-.125	-.286	-.303	-.315		-.325	-.337	-.156	-.295	-.307	-.387	4
5	-.140	-.258	-.309	-.315		-.322	-.334	-.450	-.279	-.391	-.413	5
6	-.153	-.214	-.307	-.316		-.320	-.334	-.453	-.357		-.426	6
7	-.157	-.198	-.311	-.317		-.320	-.338	-.438	-.304			7
8	-.167	-.201	-.320	-.324		-.328	-.338	-.424				8
9	-.169	-.209	-.319	-.330		-.332	-.337	-.368				9
10	-.172	-.201		-.324		-.332	-.338	-.357				10
11	-.173	-.196		-.324		-.330						11
12	-.173	-.188		-.320		-.325	-.328	-.390				12
13	-.174	-.183	-.228	-.318		-.324	-.327	-.398				13
14	-.171	-.180	-.218	-.318		-.317	-.326	-.335				14
15	-.174	-.198	-.228	-.324		-.307	-.214	-.325				15
16	-.198	-.188	-.244	-.322		-.189	-.148	.022				16
17						-.179	-.125					17
18	-.216	-.240	-.263	-.302		-.324	-.331	-.346				18
19	-.226	-.262	-.284	-.421		-.390	-.379	-.364				19
20	-.223	-.278	-.296	-.444		-.369	-.360	-.382				20
21	-.262	-.274	-.292	-.376		-.300	-.302	-.349				21
22	-.198	-.096	-.133	-.239		-.272	-.250	-.269				22
					α= 12		δ= 9.0					
1	.972	.257	.227	.212		.671	.016	.887	1.159	-.369	.464	1
2	-.085	-.289	-.309	-.331		-.346	-.372	-.303	-.293	-.302	-.416	2
3	-.172	-.283	-.298	-.311		-.324	-.344	-.244	-.319	-.314	-.435	3
4	-.127	-.285	-.302	-.313		-.326	-.336	.064	-.324	-.337	-.393	4
5	-.141	-.258	-.306	-.314		-.322	-.332	.359	-.314	-.406	-.416	5
6	-.154	-.214	-.305	-.316		-.320	-.331	.262	-.380		-.434	6
7	-.157	-.199	-.310	-.315		-.320	-.336	.197	-.334			7
8	-.168	-.202	-.318	-.323		-.328	-.336	-.083				8
9	-.170	-.209	-.318	-.329		-.331	-.334	-.371				9
10	-.174	-.201		-.324		-.331	-.336	-.425				10
11	-.174	-.195		-.323		-.329						11
12	-.174	-.188		-.318		-.324	-.327	-.432				12
13	-.175	-.183	-.226	-.317		-.324	-.325	-.441				13
14	-.171	-.179	-.215	-.317		-.317	-.308	-.396				14
15	-.175	-.197	-.225	-.323		-.295	-.110	-.373				15
16	-.198	-.188	-.241	-.322		-.176	-.089	.010				16
17						-.147	-.100					17
18	-.216	-.240	-.260	-.304		-.349	-.344	-.373				18
19	-.229	-.261	-.280	-.409		-.389	-.385	-.385				19
20	-.226	-.278	-.295	-.438		-.352	-.348	-.398				20
21	-.261	-.273	-.291	-.377		-.313	-.306	-.366				21
22	-.196	-.095	-.133	-.214		-.293	-.270	-.289				22

Table 16 Concluded

Pressure coefficients on swept wing

Configuration 7 M = 1.61 R = 3.6 x 10^6

Orif	Station 1	2	3	4	24	5	6	7	8	9	10	Orif
					α = 12		δ = 18.0					
1	.975	.258	.228	.215		.675	.020	.888	1.171	-.414	.342	1
2	-.085	-.289	-.309	-.328		-.343	-.369	-.240	-.307	-.359	-.445	2
3	-.169	-.281	-.299	-.310		-.321	-.341	-.242	-.351	-.351	-.453	3
4	-.125	-.286	-.303	-.312		-.321	-.332	-.222	-.381	-.388	-.398	4
5	-.139	-.258	-.306	-.312		-.321	-.328	-.219	-.356	-.430	-.419	5
6	-.151	-.214	-.306	-.313		-.318	-.328	.048	-.413		-.446	6
7	-.156	-.197	-.309	-.313		-.319	-.332	.334	-.369			7
8	-.166	-.201	-.317	-.320		-.327	-.332	.472				8
9	-.169	-.207	-.317	-.328		-.331	-.330	.482				9
10	-.173	-.199		-.321		-.330	-.331	.352				10
11	-.173	-.195		-.321		-.327						11
12	-.172	-.188		-.317		-.324	-.324	-.147				12
13	-.174	-.182	-.225	-.315		-.323	-.299	-.499				13
14	-.169	-.178	-.216	-.314		-.315	-.117	-.451				14
15	-.173	-.195	-.225	-.320		-.244	-.039	-.426				15
16	-.197	-.187	-.240	-.315		-.147	-.032	-.002				16
17						.009	.035					17
18	-.217	-.240	-.259	-.301		-.397	-.393	-.409				18
19	-.229	-.261	-.280	-.396		-.365	-.405	-.422				19
20	-.226	-.279	-.293	-.406		-.343	-.346	-.418				20
21	-.260	-.273	-.290	-.354		-.333	-.331	-.392				21
22	-.193	-.095	-.132	-.193		-.321	-.312	-.328				22
					α = 12		δ = 26.4					
1	.974	.257	.227	.214		.676	.022	.889	-.341	-.447	-.463	1
2	-.085	-.290	-.311	-.329		-.342	-.365	-.104	-.382	-.416	-.469	2
3	-.170	-.284	-.300	-.312		-.318	-.341	-.132	-.427	-.391	-.397	3
4	-.126	-.286	-.303	-.313		-.319	-.331	-.155	-.396	-.423	-.411	4
5	-.141	-.258	-.309	-.312		-.316	-.327	-.180	-.413	-.448	-.446	5
6	-.152	-.215	-.307	-.314		-.316	-.327	-.225	-.377		.161	6
7	-.156	-.199	-.310	-.313		-.314	-.331	-.117	-.448			7
8	-.169	-.201	-.318	-.321		-.326	-.333	.144				8
9	-.170	-.210	-.318	-.328		-.329	-.330	.521				9
10	-.173	-.200		-.322		-.327	-.332	.699				10
11	-.174	-.196		-.321		-.326						11
12	-.174	-.190		-.317		-.321	-.182	.687				12
13	-.174	-.184	-.225	-.315		-.319	-.104	.334				13
14	-.172	-.180	-.217	-.314		-.314	-.055	-.422				14
15	-.174	-.199	-.227	-.320		-.132	.040	-.451				15
16	-.199	-.188	-.240	-.312		-.096	.053	-.003				16
17						.295	.188					17
18	-.215	-.242	-.261	-.296		-.407	-.425	-.405				18
19	-.230	-.263	-.282	-.383		-.374	-.408	-.418				19
20	-.227	-.279	-.296	-.394		-.363	-.372	-.406				20
21	-.260	-.274	-.291	-.347		-.365	-.367	-.358				21
22	-.186	-.097	-.133	-.201		-.347	-.352	1.088				22
					α = 15		δ = -0.2					
1	1.009	.103	-.036	-.029		.446	-.206	.715	.785	-.181	.225	1
2	-.124	-.354	-.378	-.412		-.423	-.444	-.482	-.105	-.173	-.206	2
3	-.200	-.341	-.363	-.392		-.401	-.425	-.482	-.124	-.242	-.236	3
4	-.165	-.341	-.363	-.383		-.396	-.408	-.490	-.201	-.347	-.268	4
5	-.176	-.335	-.365	-.377		-.390	-.400	-.484	-.260	-.384	-.317	5
6	-.188	-.291	-.361	-.379		-.387	-.401	-.472	-.382		-.390	6
7	-.192	-.246	-.360	-.374		-.384	-.400	-.466	-.305			7
8	-.201	-.241	-.369	-.372		-.389	-.395	-.451				8
9	-.205	-.242	-.369	-.379		-.391	-.394	-.426				9
10	-.209	-.234		-.371		-.386	-.392	-.383				10
11	-.209	-.232		-.369		-.384						11
12	-.208	-.225		-.367		-.378	-.385	-.440				12
13	-.208	-.219	-.295	-.366		-.376	-.382	-.446				13
14	-.204	-.216	-.279	-.362		-.369	-.381	-.380				14
15	-.208	-.230	-.284	-.367		-.365	-.278	-.378				15
16	-.230	-.220	-.293	-.364		-.253	-.230	.003				16
17						-.245	-.160					17
18	-.245	-.270	-.308	-.345		-.301	-.295	-.394				18
19	-.257	-.289	-.321	-.409		-.337	-.288	-.380				19
20	-.235	-.305	-.327	-.362		-.293	-.249	-.355				20
21	-.286	-.300	-.325	-.303		-.257	-.230	-.313				21
22	-.213	-.102	-.166	-.179		-.234	-.189	-.290				22

Table 17

Pressure coefficients on swept wing

Configuration 9 M=1.61 R=3.6 x 10^6

Orif	Station 1	2	3	4	24	5	6	7	8	9	10	Orif
					α=-15		δ= 0.0					
1	.574	.641	.607	.643		.166	.371	-.295	.462	.738	-.295	1
2	.459	.583	.645	.655		.690	.714	.603	.790	.619	.413	2
3	.453	.526	.610	.593		.629	.683	.681	.694	.394	.252	3
4	.437	.470	.537	.563		.575	.631	.651	.520	.281	.162	4
5	.414	.455	.492	.519		.539	.612	.607	.376	.040	.062	5
6	.402	.450	.467	.487		.519	.584	.593	.089	.046	-.113	6
7	.411	.416	.438	.462		.495	.581	.573	.098		-.103	7
8	.431	.405	.409	.451		.492	.582	.528				8
9	.422	.384	.417	.432		.495	.574	.488				9
10	.393	.394		.440		.502	.552	.443				10
11	.399	.400		.447		.513						11
12	.400	.439		.458		.503	.516	.299				12
13	.389	.405	.417	.438		.487	.477	.580				13
14	.392	.381	.383	.402		.463	.430	.448				14
15	.380	.312	.318	.336		.344	.308	.212				15
16	.360	.187	.210	.261		.196	.176	.318				16
18	.250	.214	.222	.219		.288	.276	.117				18
19	.217	.168	.165	.192		.212	.204	.089				19
20	.207	.167	.151	.181		.199	.187	.086				20
21	.223	.193	.184	.201		.214	.211	.094				21
22	.230	.232	.234	.001		.233	.235	.074				22
					α=-12		δ=-30.					
1	.713	.669	.714	.633		.126	.589	.162	.903	1.019	-.386	1
2	.426	.472	.501	.515		.547	.566	.360	.827	.978	.705	2
3	.340	.390	.443	.433		.473	.502	.253	.505	.876	.593	3
4	.333	.336	.383	.406		.430	.443	.176	.718	.758	.504	4
5	.311	.313	.339	.369		.394	.418	.122	.464	.503	.388	5
6	.287	.293	.318	.336		.357	.391	.209	.361	.464	.213	6
7	.276	.273	.290	.302		.336	.358	.556	.360		.215	7
8	.273	.252	.251	.278		.311	.362	.669				8
9	.268	.235	.251	.271		.318	.360	.685				9
10	.245	.245		.298		.328	.357	.707				10
11	.253	.254		.303		.329						11
12	.257	.278		.311		.333	.361	.455				12
13	.247	.263	.297	.303		.329	.345	.400				13
14	.251	.259	.271	.285		.318	.322	.217				14
15	.244	.213	.220	.232		.232	.220	-.175				15
16	.229	.111	.125	.163		.099	.104	.022				16
18	.150	.120	.128	.125		.158	.150	-.146				18
19	.123	.077	.073	.077		.090	.059	-.221				19
20	.109	.063	.050	.055		.068	.036	-.229				20
21	.101	.081	.059	.058		.069	.054	-.240				21
22	.114	.116	.070	.073		.074	.132	-.247				22
					α=-12		δ=-20.					
1	.714	.672	.715	.631		.125	.587	.162	.995	.912	-.333	1
2	.426	.474	.502	.515		.547	.563	.360	.847	.865	.576	2
3	.341	.391	.445	.433		.471	.499	.254	.401	.660	.446	3
4	.334	.337	.385	.406		.431	.441	.172	.552	.572	.329	4
5	.313	.316	.338	.369		.395	.419	.146	.465	.304	.244	5
6	.287	.293	.319	.336		.358	.390	.448	.228	.281	.058	6
7	.276	.276	.290	.301		.336	.356	.620	.142		.064	7
8	.273	.254	.249	.276		.310	.360	.618				8
9	.269	.235	.251	.272		.318	.359	.618				9
10	.245	.248		.297		.328	.356	.619				10
11	.254	.255		.303		.328						11
12	.257	.270		.310		.331	.360	.444				12
13	.248	.264	.296	.302		.328	.345					13
14	.252	.261	.270	.283		.318	.321					14
15	.245	.214	.219	.232		.232	.218	-.025				15
16	.231	.113	.124	.163		.096	.104	.141				16
18	.150	.120	.126	.125		.156	.149	-.081				18
19	.125	.077	.072	.078		.089	.057	-.194				19
20	.110	.064	.049	.055		.066	.037	-.207				20
21	.101	.084	.058	.057		.068	.059	-.222				21
22	.116	.114	.069	.069		.073	.114	-.230				22

Table 17 Continued

Pressure coefficients on swept wing

Configuration 9 M=1.61 R=3.6 x 10^6

Orif	Station 1	2	3	4	24	5	6	7	8	9	10	Orif
					α=-12		δ=-10.					
1	.712	.669	.714	.632		.125	.584	.161	1.012	.818	-.229	1
2	.425	.472	.501	.514		.547	.563	.361	.327	.668	.437	2
3	.339	.390	.444	.431		.473	.500	.254	.619	.458	.277	3
4	.331	.336	.384	.406		.430	.442	.218	.398	.410	.204	4
5	.309	.314	.339	.368		.395	.416	.523	.393	.144	.128	5
6	.286	.290	.318	.337		.357	.390	.584	.147	.083	-.064	6
7	.275	.272	.289	.302		.337	.356	.559	.068		-.068	7
8	.271	.253	.250	.277		.309	.360	.531				8
9	.266	.234	.251	.272		.316	.359	.513				9
10	.243	.245		.298		.325	.356	.515				10
11	.251	.254		.304		.327						11
12	.256	.271		.313		.332	.360	.369				12
13	.245	.263	.297	.302		.326	.345	.700				13
14	.248	.258	.271	.284		.317	.321	.554				14
15	.242	.213	.220	.234		.230	.220	.271				15
16	.226	.112	.125	.164		.095	.104	.366				16
18	.147	.120	.127	.125		.155	.150	.032				18
19	.122	.077	.071	.077		.088	.060	-.057				19
20	.108	.063	.049	.056		.066	.048	-.082				20
21	.099	.081	.058	.058		.068	.085	-.184				21
22	.114	.114	.068	.075		.073	.102	-.204				22
					α=-12		δ=-5.					
1	.714	.672	.715	.633		.125	.585	.161	.978	.717	-.126	1
2	.425	.472	.502	.515		.548	.564	.362	.364	.565	.353	2
3	.339	.389	.445	.432		.474	.499	.261	.430	.379	.200	3
4	.332	.336	.384	.408		.432	.442	.507	.342	.320	.145	4
5	.312	.314	.337	.370		.398	.416	.556	.316	.053	.070	5
6	.286	.293	.318	.338		.358	.391	.529	.076	.002	-.124	6
7	.276	.274	.288	.304		.338	.358	.509	.020		-.134	7
8	.272	.254	.249	.277		.309	.361	.479				8
9	.268	.235	.250	.273		.318	.360	.462				9
10	.245	.248		.299		.327	.357	.466				10
11	.254	.256		.305		.328						11
12	.257	.276		.314		.332	.361	.339				12
13	.246	.263	.296	.303		.327	.346	.562				13
14	.252	.261	.270	.284		.318	.321	.445				14
15	.244	.214	.219	.234		.231	.220	.239				15
16	.228	.113	.124	.164		.095	.103	.322				16
18	.150	.121	.128	.126		.155	.151	.077				18
19	.124	.080	.071	.078		.088	.064	.042				19
20	.108	.066	.049	.056		.066	.060	-.017				20
21	.100	.084	.058	.058		.068	.084	-.122				21
22	.114	.116	.068	.078		.072	.097	-.166				22
					α=-12		δ=0.0					
1	.704	.673	.716	.635		.126	.584	.156	.798	.556	-.060	1
2	.425	.475	.501	.515		.545	.564	.407	.593	.448	.272	2
3	.339	.391	.446	.433		.472	.499	.482	.517	.258	.132	3
4	.331	.337	.385	.409		.431	.442	.460	.382	.212	.087	4
5	.311	.315	.337	.370		.395	.416	.436	.300	-.022	.009	5
6	.286	.293	.318	.340		.358	.391	.418	.015	-.043	-.161	6
7	.275	.274	.291	.303		.337	.356	.413	.004		-.161	7
8	.271	.254	.250	.279		.310	.361	.386				8
9	.267	.236	.251	.273		.318	.359	.369				9
10	.243	.246		.298		.327	.356	.328				10
11	.253	.255		.304		.329						11
12	.257	.266		.313		.330	.361	.210				12
13	.246	.264	.297	.304		.327	.346	.509				13
14	.251	.260	.272	.285		.318	.321	.379				14
15	.244	.215	.221	.233		.230	.222	.165				15
16	.227	.114	.126	.167		.093	.100	.289				16
18	.151	.122	.127	.126		.156	.157	.053				18
19	.124	.078	.074	.078		.089	.077	.009				19
20	.110	.064	.050	.057		.065	.062	.004				20
21	.099	.083	.059	.058		.068	.078	-.005				21
22	.114	.115	.069	.070		.074	.085	-.025				22

Table 17 Continued

Pressure coefficients on swept wing

Configuration 9 M = 1.61 R = 3.6 x 10^6

Orif	Station 1	2	3	4	24	5	6	7	8	9	10	Orif
					$\alpha = -12$		$\delta = 5.0$					
1	.708	.672	.715	.634		.124	.586	.172	.863	.481	.103	1
2	.427	.474	.502	.516		.547	.566	.791	.301	.385	.205	2
3	.339	.391	.445	.433		.473	.501	.638	.308	.194	.074	3
4	.334	.338	.385	.408		.433	.444	.495	.274	.140	.032	4
5	.312	.315	.337	.370		.396	.420	.426	.211	-.080	-.032	5
6	.287	.293	.317	.338		.359	.394	.373	-.055	-.106	-.197	6
7	.275	.276	.290	.303		.338	.360	.353	-.123		-.211	7
8	.273	.256	.250	.277		.312	.364	.320				8
9	.268	.235	.252	.272		.319	.361	.302				9
10	.245	.247		.299		.329	.360	.222				10
11	.254	.256		.304		.329						11
12	.257	.273		.314		.334	.366	.132				12
13	.248	.264	.297	.305		.330	.353	.292				13
14	.252	.260	.272	.285		.320	.343	.186				14
15	.245	.214	.220	.235		.234	.245	.032				15
16	.227	.115	.126	.164		.098	.105	.163				16
18	.151	.121	.127	.125		.159	.180	-.038				18
19	.124	.077	.072	.078		.091	.085	-.071				19
20	.110	.063	.049	.057		.068	.065	-.086				20
21	.101	.085	.058	.060		.071	.070	-.089				21
22	.115	.117	.069	.074		.077	.076	-.117				22
					$\alpha = -12$		$\delta = 10.0$					
1	.708	.673	.718	.638		.120	.586	.157	.941	.454	.271	1
2	.430	.475	.503	.516		.546	.566	.485	.369	.348	.170	2
3	.341	.391	.446	.433		.472	.502	.558	.189	.152	.045	3
4	.336	.338	.384	.409		.428	.444	.695	.182	.120	.011	4
5	.312	.316	.339	.372		.394	.419	.568	.126	-.126	-.055	5
6	.287	.295	.320	.339		.358	.393	.389	-.135	-.158	-.222	6
7	.276	.275	.291	.303		.336	.359	.337	-.197		-.230	7
8	.274	.256	.252	.280		.312	.364	.290				8
9	.270	.237	.252	.272		.318	.361	.269				9
10	.245	.248		.298		.327	.358	.157				10
11	.254	.256		.303		.329						11
12	.259	.264		.313		.332	.363	.066				12
13	.248	.266	.297	.304		.329	.352	.158				13
14	.252	.261	.274	.283		.319	.340	.070				14
15	.245	.214	.220	.232		.232	.246	-.068				15
16	.226	.115	.128	.165		.095	.102	.087				16
18	.151	.121	.128	.125		.157	.185	-.083				18
19	.126	.078	.073	.078		.089	.089	-.116				19
20	.110	.064	.052	.057		.068	.064	-.137				20
21	.103	.086	.060	.059		.068	.068	-.137				21
22	.118	.117	.069	.078		.074	.066	-.154				22
					$\alpha = -12$		$\delta = 20.0$					
1	.704	.672	.717	.636		.120	.583	.150	.988	.301	.463	1
2	.427	.474	.501	.516		.547	.565	.408	.154	.257	.141	2
3	.339	.390	.445	.432		.473	.504	.408	.076	.098	.095	3
4	.332	.335	.384	.408		.431	.444	.361	-.015	.029	.029	4
5	.311	.314	.337	.370		.395	.420	.318	.010	-.224	-.054	5
6	.285	.292	.320	.337		.357	.392	.377	-.298	-.260	-.246	6
7	.275	.274	.291	.304		.337	.358	.651	-.262		-.259	7
8	.272	.254	.250	.278		.312	.364	.454				8
9	.266	.235	.251	.271		.319	.361	.289				9
10	.245	.246		.298		.329	.359	.056				10
11	.254	.255		.304		.329						11
12	.256	.272		.314		.334	.364	-.072				12
13	.247	.263	.297	.304		.330	.349	-.021				13
14	.251	.260	.273	.284		.321	.340	-.091				14
15	.243	.214	.222	.233		.232	.244	-.194				15
16	.221	.115	.127	.163		.093	.100	-.017				16
18	.149	.120	.127	.124		.157	.180	-.160				18
19	.124	.076	.074	.078		.091	.082	-.198				19
20	.109	.064	.050	.056		.067	.060	-.195				20
21	.102	.082	.060	.057		.069	.066	-.188				21
22	.116	.117	.070	.076		.075	.066	-.175				22

Table 17 Continued

Pressure coefficients on swept wing

Configuration 9 M = 1.61 R = 3.6 x 10^6

Orif	Station 1	2	3	4	24	5	6	7	8	9	10	Orif
					α = −12		δ = 30.0					
1	.714	.672	.715	.636		.121	.585	.146	.904	.195	.652	1
2	.427	.474	.502	.516		.547	.568	.363	.015	.166	.108	2
3	.339	.389	.444	.433		.474	.504	.303	−.039	.034	.089	3
4	.332	.335	.383	.410		.431	.446	.376	−.096	−.125	.028	4
5	.312	.314	.337	.370		.396	.420	.352	−.041	−.308	−.055	5
6	.285	.292	.318	.338		.357	.394	.351	−.379	−.325	−.211	6
7	.276	.274	.290	.303		.337	.360	.363	−.298		−.239	7
8	.272	.254	.251	.278		.312	.366	.540				8
9	.268	.236	.251	.272		.320	.363	.620				9
10	.245	.245		.298		.329	.360	.093				10
11	.254	.256		.304		.329						11
12	.257	.275		.314		.334	.365	−.170				12
13	.247	.263	.297	.304		.329	.352	−.085				13
14	.250	.259	.272	.286		.320	.342	−.142				14
15	.244	.214	.220	.234		.233	.252	−.273				15
16	.219	.113	.126	.166		.095	.101	−.082				16
18	.150	.120	.127	.125		.158	.188	−.217				18
19	.124	.076	.074	.078		.091	.089	−.245				19
20	.110	.064	.048	.057		.068	.060	−.234				20
21	.103	.084	.058	.059		.069	.059	−.217				21
22	.116	.115	.070	.065		.076	.055	−.194				22
					α = −9		δ = 0.0					
1	.776	.681	.745	.641		.368	.679	.475	.890	.453	.121	1
2	.435	.381	.413	.435		.447	.478	.365	.499	.344	.186	2
3	.259	.290	.344	.330		.371	.391	.372	.397	.150	.055	3
4	.248	.249	.286	.304		.337	.343	.349	.250	.136	.012	4
5	.230	.224	.245	.276		.302	.319	.334	.210	−.053	−.038	5
6	.205	.208	.230	.252		.274	.292	.309	−.025	−.081	−.171	6
7	.196	.194	.216	.224		.247	.243	.300	−.041		−.177	7
8	.190	.172	.169	.191		.203	.234	.270				8
9	.188	.155	.159	.166		.193	.227	.259				9
10	.170	.164		.189		.205	.230	.214				10
11	.177	.175		.194		.212						11
12	.179	.194		.204		.217	.239	.130				12
13	.170	.179	.193	.200		.216	.234	.382				13
14	.174	.172	.179	.187		.217	.226	.286				14
15	.162	.130	.138	.147		.148	.153	.134				15
16	.141	.052	.053	.085		.031	.053	.231				16
18	.087	.047	.057	.052		.078	.090	.001				18
19	.072	.005	.000	.008		.020	.006	−.045				19
20	.047	−.011	−.026	−.018		−.004	−.007	−.051				20
21	−.014	.002	−.023	−.022		−.005	.004	−.061				21
22	.024	.033	−.017	−.007		−.005	.011	−.111				22
					α = −6		δ = −30.					
1	.798	.674	.734	.679		.537	.693	.690	.997	.857	−.285	1
2	.239	.318	.343	.372		.359	.392	.246	.591	.735	.527	2
3	.199	.208	.248	.245		.292	.294	.091	.463	.550	.415	3
4	.188	.183	.218	.230		.256	.263	.076	.630	.508	.294	4
5	.172	.160	.177	.202		.228	.244	.082	.394	.285	.236	5
6	.150	.144	.164	.183		.207	.221	.365	.322	.238	.056	6
7	.141	.138	.153	.162		.183	.184	.375	.218		.058	7
8	.135	.116	.119	.138		.144	.165	.399				8
9	.133	.100	.098	.107		.129	.153	.403				9
10	.114	.108		.120		.130	.145	.389				10
11	.119	.119		.125		.132						11
12	.126	.144		.138		.141	.153	.047				12
13	.111	.123	.133	.135		.145	.152	.308				13
14	.120	.118	.128	.130		.150	.153	.093				14
15	.107	.078	.089	.095		.093	.100	−.259				15
16	.091	.012	.014	.042		−.015	.016	−.054				16
18	.040	.002	.013	.005		.024	.038	−.227				18
19	.029	−.039	−.036	−.036		−.028	−.046	−.170				19
20	.013	−.054	−.062	−.057		−.051	−.068	−.156				20
21	−.064	−.042	−.062	−.064		−.048	−.056	−.127				21
22	−.023	−.009	−.058	−.058		−.046	.010	−.120				22

Table 17 Continued

Pressure coefficients on swept wing

Configuration 9 M= 1.61 R=3.6 x 10^6

Orif	Station 1	2	3	4	24	5	6	7	8	9	10	Orif
					α= - 6		δ= -20.					
1	.797	.675	.734	.679		.536	.691	.687	1.041	.706	-.135	1
2	.238	.318	.341	.371		.358	.391	.239	.379	.604	.384	2
3	.197	.208	.249	.244		.292	.293	.078	.474	.322	.251	3
4	.190	.183	.217	.230		.256	.259	.049	.362	.283	.135	4
5	.171	.161	.177	.200		.226	.242	.288	.261	.105	.076	5
6	.151	.146	.163	.182		.205	.218	.365	.087	.070	-.081	6
7	.141	.140	.153	.160		.183	.183	.396	.104		-.075	7
8	.134	.117	.116	.136		.142	.164	.349				8
9	.132	.100	.098	.106		.127	.151	.330				9
10	.115	.108		.117		.130	.144	.292				10
11	.120	.119		.128		.130						11
12	.126	.142		.137		.140	.152	.108				12
13	.112	.123	.132	.136		.143	.150	.496				13
14	.120	.118	.125	.130		.148	.151	.340				14
15	.108	.079	.091	.097		.092	.100	-.042				15
16	.091	.013	.011	.041		-.016	.012	.083				16
18	.042	.002	.011	.005		.025	.037	-.122				18
19	.030	-.038	-.037	-.038		-.030	-.047	-.190				19
20	.014	-.055	-.064	-.057		-.051	-.069	-.182				20
21	-.064	-.042	-.064	-.066		-.049	-.055	-.157				21
22	-.022	-.010	-.059	-.064		-.047	-.007	-.162				22
					α= - 6		δ= -10.					
1	.798	.676	.737	.680		.535	.691	.684	1.033	.539	.093	1
2	.240	.319	.343	.372		.360	.392	.241	.362	.394	.239	2
3	.199	.210	.251	.245		.294	.294	.084	.473	.163	.092	3
4	.192	.183	.219	.232		.257	.261	.291	.206	.143	.024	4
5	.174	.161	.177	.203		.226	.243	.384	.167	-.015	-.025	5
6	.152	.149	.163	.184		.207	.219	.352	-.007	-.066	-.161	6
7	.142	.141	.154	.162		.183	.184	.323	-.063		-.166	7
8	.136	.118	.115	.139		.144	.166	.270				8
9	.134	.101	.097	.107		.129	.153	.254				9
10	.116	.109		.119		.130	.145	.227				10
11	.121	.120		.128		.131						11
12	.128	.144		.140		.141	.155	.104				12
13	.112	.126	.134	.138		.144	.153	.375				13
14	.121	.120	.126	.130		.151	.154	.288				14
15	.110	.080	.090	.099		.094	.101	.129				15
16	.089	.016	.012	.043		-.014	.012	.234				16
18	.041	.004	.013	.007		.027	.037	-.013				18
19	.032	-.037	-.038	-.036		-.028	-.045	-.074				19
20	.014	-.052	-.062	-.057		-.050	-.064	-.107				20
21	-.062	-.042	-.060	-.063		-.047	-.042	-.178				21
22	-.021	-.008	-.058	-.050		-.047	-.023	-.199				22
					α= - 6		δ= -.5.					
1	.798	.673	.735	.681		.535	.694	.685	.962	.428	.215	1
2	.238	.318	.343	.373		.361	.397	.244	.385	.309	.155	2
3	.198	.207	.249	.245		.294	.297	.283	.283	.100	.037	3
4	.190	.183	.219	.232		.257	.264	.346	.131	.091	-.020	4
5	.172	.161	.178	.204		.228	.245	.322	.103	-.081	-.057	5
6	.150	.147	.164	.185		.207	.223	.293	-.086	-.126	-.184	6
7	.140	.140	.155	.163		.184	.186	.272	-.084		-.194	7
8	.134	.116	.118	.139		.146	.168	.231				8
9	.131	.099	.099	.109		.130	.155	.214				9
10	.114	.107		.118		.132	.148	.190				10
11	.120	.120		.128		.133						11
12	.127	.130		.138		.142	.157	.110				12
13	.111	.124	.135	.137		.146	.154	.375				13
14	.119	.117	.128	.130		.152	.155	.254				14
15	.107	.079	.091	.098		.095	.103	.092				15
16	.086	.015	.015	.044		-.014	.012	.195				16
18	.038	.002	.014	.006		.027	.039	-.028				18
19	.029	-.038	-.037	-.035		-.028	-.040	-.070				19
20	.013	-.053	-.061	-.055		-.049	-.055	-.111				20
21	-.064	-.042	-.060	-.064		-.047	-.041	-.123				21
22	-.024	-.009	-.057	-.058		-.046	-.032	-.172				22

Table 17 Continued

Pressure coefficients on swept wing

Configuration 9 M= 1.61 R= 3.6 x 10^6

Orif	Station 1	2	3	4	24	5	6	7	8	9	10	Orif
					α= − 6		δ= 0.0					
1	.798	.676	.735	.682		.533	.691	.684	.849	.357	.317	1
2	.238	.319	.342	.372		.361	.394	.391	.342	.262	.109	2
3	.196	.207	.248	.244		.293	.295	.299	.285	.064	.008	3
4	.188	.183	.217	.230		.257	.264	.287	.155	.064	−.030	4
5	.172	.159	.175	.201		.225	.244	.256	.115	−.094	−.074	5
6	.150	.148	.162	.182		.206	.221	.233	−.080	−.126	−.181	6
7	.141	.139	.152	.161		.183	.184	.215	−.081		−.178	7
8	.135	.116	.114	.137		.144	.165	.181				8
9	.132	.100	.097	.106		.128	.154	.172				9
10	.115	.107		.117		.130	.146	.120				10
11	.120	.119		.123		.132						11
12	.127	.130		.137		.141	.153	.047				12
13	.111	.124	.131	.136		.144	.152	.270				13
14	.119	.118	.125	.130		.149	.154	.182				14
15	.108	.078	.090	.097		.095	.100	.052				15
16	.088	.016	.012	.042		−.016	.009	.164				16
18	.041	.003	.009	.003		.026	.044	−.045				18
19	.029	−.039	−.039	−.038		−.029	−.037	−.096				19
20	.014	−.054	−.064	−.057		−.051	−.051	−.085				20
21	−.063	−.043	−.064	−.066		−.049	−.044	−.109				21
22	−.023	−.010	−.060	−.051		−.047	−.039	−.127				22
					α= − 6		δ= 5.0					
1	.797	.673	.735	.677		.536	.693	.683	.916	.277	.518	1
2	.239	.319	.344	.371		.362	.398	.451	.270	.185	.042	2
3	.197	.210	.252	.244		.295	.297	.427	.117	.020	.010	3
4	.189	.183	.220	.230		.259	.265	.330	.055	.031	−.030	4
5	.173	.160	.177	.202		.229	.246	.221	.054	−.141	−.078	5
6	.151	.149	.162	.183		.209	.223	.173	−.156	−.185	−.187	6
7	.142	.141	.153	.162		.186	.186	.145	−.174		−.196	7
8	.136	.120	.116	.138		.146	.167	.104				8
9	.133	.102	.097	.106		.130	.155	.099				9
10	.117	.110		.119		.131	.148	.038				10
11	.120	.121		.127		.133						11
12	.128	.147		.138		.143	.156	−.024				12
13	.113	.126	.132	.138		.146	.154	.133				13
14	.120	.120	.125	.130		.151	.157	.069				14
15	.108	.081	.090	.096		.096	.110	−.040				15
16	.088	.018	.012	.043		−.014	.005	.094				16
18	.042	.005	.012	.005		.027	.056	−.098				18
19	.032	−.037	−.039	−.036		−.027	−.024	−.129				19
20	.016	−.051	−.064	−.056		−.048	−.048	−.149				20
21	−.061	−.040	−.063	−.063		−.047	−.049	−.151				21
22	−.021	−.007	−.059	−.056		−.046	−.054	−.180				22
					α= − 6		δ= 10.0					
1	.797	.673	.735	.683		.536	.694	.683	.959	.216	.623	1
2	.242	.320	.344	.374		.363	.397	.396	.212	.164	.050	2
3	.198	.209	.251	.247		.295	.299	.275	.078	.003	.028	3
4	.191	.184	.220	.232		.257	.266	.290	.001	.016	−.012	4
5	.173	.162	.177	.203		.227	.248	.430	.010	−.161	−.056	5
6	.153	.149	.164	.185		.207	.225	.224	−.177	−.199	−.176	6
7	.142	.141	.155	.163		.186	.188	.134	−.184		−.193	7
8	.136	.119	.118	.138		.148	.170	.076				8
9	.135	.101	.098	.108		.132	.156	.066				9
10	.118	.109		.119		.134	.151	.008				10
11	.123	.121		.128		.136						11
12	.129	.155		.140		.143	.158	−.060				12
13	.114	.126	.135	.138		.149	.155	.086				13
14	.121	.120	.128	.131		.153	.159	.012				14
15	.109	.081	.092	.099		.098	.111	−.090				15
16	.087	.017	.014	.045		−.013	.006	.053				16
18	.042	.004	.013	.006		.030	.057	−.121				18
19	.032	−.036	−.037	−.035		−.026	−.026	−.148				19
20	.016	−.051	−.062	−.054		−.048	−.047	−.166				20
21	−.061	−.041	−.061	−.063		−.046	−.047	−.178				21
22	−.020	−.006	−.057	−.061		−.045	−.054	−.191				22

Table 17 Continued

Pressure coefficients on swept wing

Configuration 9 M= 1.61 R=3.6 x 10^6

Orif	Station 1	2	3	4	24	5	6	7	8	9	10	Orif
					α= - 6		δ= 20.0					
1	.798	.676	.736	.688		.540	.693	.682	.927	.091	.702	1
2	.239	.319	.345	.381		.369	.398	.245	-.012	.068	.024	2
3	.199	.208	.252	.252		.301	.299	.262	-.052	-.020	.040	3
4	.190	.183	.219	.237		.266	.266	.276	-.135	-.051	.010	4
5	.173	.160	.179	.209		.235	.248	.220	.042	-.212	-.024	5
6	.151	.147	.163	.191		.215	.224	.191	-.280	-.248	-.136	6
7	.141	.139	.161	.170		.192	.188	.219	-.215		-.185	7
8	.135	.117	.123	.144		.147	.169	.256				8
9	.133	.099	.105	.113		.130	.156	.080				9
10	.116	.109		.126		.134	.149	-.089				10
11	.120	.120		.133		.136						11
12	.126	.146		.145		.143	.158	-.134				12
13	.112	.126	.141	.144		.149	.156	-.005				13
14	.120	.120	.134	.137		.152	.160	-.074				14
15	.109	.081	.099	.104		.097	.112	-.161				15
16	.085	.016	.020	.051		-.013	.004	-.003				16
18	.040	.004	.018	.012		.028	.066	-.195				18
19	.031	-.037	-.028	-.029		-.027	-.024	-.204				19
20	.014	-.052	-.057	-.049		-.050	-.050	-.205				20
21	-.062	-.041	-.055	-.057		-.047	-.055	-.210				21
22	-.020	-.007	-.051	-.051		-.044	-.065	-.215				22
					α= - 6		δ= 30.0					
1	.800	.675	.732	.679		.532	.691	.675	.739	.043	.602	1
2	.241	.321	.341	.372		.363	.394	.245	-.119	-.024	-.173	2
3	.200	.209	.247	.245		.296	.296	.084	-.154	-.110	-.107	3
4	.192	.184	.216	.232		.258	.265	.198	-.198	-.218	-.070	4
5	.175	.162	.179	.203		.230	.246	.340	-.078	-.266	-.095	5
6	.152	.149	.165	.184		.209	.223	.318	-.337	-.293	-.160	6
7	.143	.141	.155	.162		.185	.186	.297	-.238		-.267	7
8	.138	.120	.117	.139		.146	.169	.265				8
9	.135	.102	.099	.109		.130	.155	.319				9
10	.118	.109		.120		.133	.148	-.077				10
11	.122	.121		.126		.136						11
12	.129	.135		.140		.144	.156	-.144				12
13	.114	.126	.135	.140		.147	.154	-.104				13
14	.121	.120	.128	.132		.153	.157	-.162				14
15	.110	.080	.092	.099		.096	.111	-.259				15
16	.083	.017	.014	.046		-.013	.005	-.082				16
18	.043	.005	.013	.006		.028	.080	-.314				18
19	.032	-.036	-.035	-.033		-.026	-.008	-.305				19
20	.016	-.051	-.063	-.054		-.048	-.038	-.283				20
21	-.060	-.041	-.060	-.062		-.047	-.048	-.249				21
22	-.020	-.007	-.057	-.054		-.045	-.066	-.231				22
					α= - 3		δ= 0.0					
1	.826	.696	.736	.674		.681	.669	.826	.854	.180	.499	1
2	.156	.187	.224	.246		.229	.256	.269	.166	.143	.021	2
3	.117	.096	.106	.106		.149	.136	.131	.163	-.008	-.012	3
4	.108	.085	.105	.117		.137	.137	.158	.056	.008	-.014	4
5	.092	.070	.078	.091		.110	.120	.142	.030	-.119	-.050	5
6	.073	.060	.066	.075		.091	.103	.119	-.111	-.134	-.138	6
7	.063	.056	.057	.060		.078	.078	.114	-.097		-.149	7
8	.057	.039	.033	.044		.046	.059	.083				8
9	.054	.021	.013	.022		.032	.051	.073				9
10	.053	.028		.026		.037	.042	.036				10
11	.048	.041		.029		.035						11
12	.050	.067		.038		.039	.046	-.028				12
13	.037	.048	.046	.042		.037	.045	.105				13
14	.048	.045	.044	.040		.048	.046	.066				14
15	.037	.008	.016	.016		.006	.011	-.013				15
16	.016	-.035	-.047	-.028		-.083	-.056	.104				16
18	-.030	-.057	-.051	-.061		-.055	-.046	-.092				18
19	-.032	-.097	-.099	-.100		-.102	-.115	-.139				19
20	-.036	-.114	-.120	-.119		-.120	-.129	-.146				20
21	-.130	-.105	-.122	-.123		-.119	-.120	-.144				21
22	-.074	-.063	-.120	-.112		-.115	-.114	-.150				22

Table 17 Continued

Pressure coefficients on swept wing

Configuration 9 M= 1.61 R= 3.6 x 10^6

Orif	Station 1	2	3	4	24	5	6	7	8	9	10	Orif
					α= 0		δ= -30.					
1	.852	.763	.752	.559		.722	.602	.844	1.044	.617	-.184	1
2	.102	.080	.106	.132		.129	.158	.101	.643	.540	.367	2
3	.048	.025	.052	.058		.065	.064	-.031	.522	.234	.201	3
4	.048	.010	.017	.015		.030	.022	-.011	.267	.213	.101	4
5	.034	.001	-.006	-.005		.005	.016	.040	.124	.072	.076	5
6	.016	-.004	-.008	-.018		-.006	.002	.144	.024	.057	-.054	6
7	.009	-.003	-.016	-.026		-.016	-.017	.078	.042		-.034	7
8	.006	-.018	-.032	-.037		-.037	-.031	.019				8
9	-.001	-.034	-.047	-.056		-.054	-.037	-.008				9
10	-.004	-.026		-.046		-.049	-.046	-.051				10
11	-.009	-.016		-.045		-.046						11
12	-.005	.006		-.036		-.039	-.042	-.175				12
13	-.016	-.008	-.019	-.034		-.038	-.043	.010				13
14	-.007	-.008	-.017	-.032		-.033	-.042	-.094				14
15	-.015	-.042	-.042	-.049		-.064	-.062	-.243				15
16	-.039	-.074	-.098	-.083		-.138	-.100	-.075				16
18	-.076	-.100	-.101	-.113		-.119	-.115	-.269				18
19	-.078	-.135	-.142	-.153		-.161	-.177	-.317				19
20	-.078	-.153	-.165	-.168		-.177	-.190	-.281				20
21	-.165	-.147	-.165	-.172		-.173	-.157	-.253				21
22	-.091	-.091	-.163	-.160		-.168	-.115	-.208				22
					α= 0		δ= -20.					
1	.854	.764	.752	.563		.722	.603	.846	1.046	.395	.076	1
2	.105	.082	.106	.136		.131	.162	.102	.431	.281	.180	2
3	.050	.024	.051	.061		.069	.066	-.031	.295	.074	.042	3
4	.051	.011	.017	.018		.032	.022	.055	.076	.055	-.001	4
5	.037	.002	-.006	-.003		.008	.017	.109	.007	-.062	-.027	5
6	.019	-.004	-.009	-.015		-.004	.003	.085	-.073	-.067	-.118	6
7	.010	-.003	-.015	-.024		-.014	-.016	.095	-.058		-.102	7
8	.006	-.017	-.032	-.033		-.036	-.031	.043				8
9	.000	-.032	-.046	-.051		-.054	-.036	-.008				9
10	-.005	-.028		-.043		-.047	-.045	-.024				10
11	-.008	-.016		-.041		-.045						11
12	-.005	.012		-.033		-.037	-.041	-.115				12
13	-.009	-.006	-.018	-.030		-.037	-.041	.024				13
14	-.003	-.008	-.016	-.029		-.031	-.040	-.024				14
15	-.014	-.041	-.038	-.047		-.063	-.062	-.117				15
16	-.041	-.072	-.094	-.080		-.136	-.104	.021				16
18	-.075	-.099	-.098	-.110		-.118	-.113	-.170				18
19	-.079	-.136	-.139	-.149		-.160	-.174	-.169				19
20	-.078	-.154	-.162	-.165		-.176	-.189	-.206				20
21	-.162	-.145	-.162	-.170		-.173	-.162	-.221				21
22	-.089	-.090	-.159	-.161		-.170	-.133	-.215				22
					α= 0		δ= -10.					
1	.850	.763	.753	.564		.723	.604	.849	1.022	.230	.374	1
2	.103	.080	.105	.136		.133	.162	.102	.246	.113	.023	2
3	.048	.024	.050	.061		.068	.067	.020	.098	-.020	-.034	3
4	.049	.009	.018	.017		.035	.025	.085	-.001	-.014	-.019	4
5	.036	.001	-.007	-.005		.007	.018	.083	-.033	-.125	-.043	5
6	.016	-.005	-.009	-.016		-.002	.005	.066	-.120	-.139	-.130	6
7	.007	-.005	-.015	-.024		-.013	-.015	.065	-.113		-.136	7
8	.005	-.019	-.033	-.035		-.034	-.028	.026				8
9	-.002	-.034	-.047	-.053		-.050	-.034	.007				9
10	-.008	-.028		-.045		-.046	-.043	-.019				10
11	-.008	-.017		-.043		-.042						11
12	-.008	.001		-.034		-.036	-.040	-.074				12
13	-.008	-.008	-.020	-.032		-.036	-.039	-.004				13
14	-.005	-.009	-.017	-.031		-.029	-.038	-.032				14
15	-.015	-.042	-.040	-.047		-.058	-.059	-.077				15
16	-.047	-.073	-.095	-.080		-.134	-.108	.048				16
18	-.077	-.100	-.102	-.113		-.117	-.111	-.139				18
19	-.081	-.138	-.141	-.151		-.156	-.172	-.173				19
20	-.080	-.154	-.162	-.168		-.173	-.184	-.188				20
21	-.161	-.148	-.163	-.171		-.170	-.165	-.207				21
22	-.091	-.093	-.161	-.159		-.167	-.151	-.209				22

Table 17 Continued

Pressure coefficients on swept wing

Configuration 9 M= 1.61 R=3.6 x 10^6

Orif	Station 1	2	3	4	24	5	6	7	8	9	10	Orif
					α= 0		δ= - 5.					
1	.852	.766	.754	.566		.726	.607	.851	.976	.156	.499	1
2	.104	.082	.106	.137		.135	.162	.145	.140	.070	-.002	2
3	.049	.024	.052	.061		.071	.068	.091	.076	-.034	-.022	3
4	.049	.010	.018	.019		.037	.026	.063	-.017	-.026	-.013	4
5	.035	.001	-.005	-.002		.012	.021	.057	-.031	-.142	-.043	5
6	.018	-.004	-.009	-.014		.002	.007	.041	-.137	-.163	-.135	6
7	.009	-.003	-.015	-.020		-.008	-.015	.049	-.126		-.163	7
8	.005	-.017	-.033	-.032		-.032	-.026	.018				8
9	-.003	-.033	-.045	-.051		-.048	-.032	.003				9
10	-.007	-.027		-.041		-.043	-.041	-.020				10
11	-.008	-.016		-.040		-.042						11
12	-.008	.008		-.030		-.035	-.036	-.065				12
13	-.009	-.007	-.018	-.028		-.033	-.038	.009				13
14	-.004	-.008	-.017	-.027		-.026	-.036	-.015				14
15	-.015	-.040	-.038	-.045		-.059	-.057	-.060				15
16	-.047	-.072	-.094	-.078		-.131	-.109	.054				16
18	-.078	-.100	-.099	-.109		-.116	-.109	-.127				18
19	-.081	-.135	-.139	-.146		-.157	-.168	-.166				19
20	-.081	-.154	-.161	-.162		-.172	-.182	-.184				20
21	-.160	-.146	-.162	-.164		-.168	-.167	-.186				21
22	-.090	-.092	-.159	-.160		-.165	-.159	-.190				22
					α= 0		δ= 0.0					
1	.853	.765	.752	.567		.724	.609	.856	.819	.103	.635	1
2	.108	.084	.110	.141		.137	.166	.223	.096	.032	.015	2
3	.054	.026	.056	.062		.071	.068	.066	.055	-.042	-.006	3
4	.054	.012	.019	.018		.037	.026	.034	-.027	-.029	-.001	4
5	.037	.002	-.005	.000		.012	.023	.038	-.036	-.142	-.028	5
6	.021	-.002	-.007	-.013		.001	.007	.018	-.138	-.153	-.126	6
7	.010	-.001	-.015	-.022		-.009	-.012	.021	-.117		-.160	7
8	.009	-.016	-.034	-.033		-.032	-.029	-.007				8
9	.002	-.034	-.046	-.051		-.048	-.029	-.015				9
10	-.003	-.026		-.042		-.045	-.041	-.037				10
11	-.004	-.015		-.040		-.041						11
12	-.001	.002		-.033		-.034	-.037	-.060				12
13	-.011	-.007	-.020	-.029		-.034	-.037	.009				13
14	-.004	-.007	-.018	-.028		-.028	-.035	-.021				14
15	-.014	-.040	-.038	-.046		-.059	-.056	-.062				15
16	-.047	-.073	-.095	-.078		-.133	-.110	.055				16
18	-.075	-.100	-.100	-.110		-.114	-.106	-.117				18
19	-.075	-.135	-.141	-.150		-.156	-.167	-.155				19
20	-.078	-.154	-.162	-.164		-.173	-.180	-.166				20
21	-.168	-.145	-.164	-.168		-.170	-.174	-.178				21
22	-.092	-.092	-.162	-.164		-.165	-.168	-.171				22
					α= 0		δ= 5.0					
1	.856	.767	.754	.569		.726	.609	.853	.900	.043	.706	1
2	.108	.087	.111	.145		.139	.168	.305	.051	-.015	.013	2
3	.054	.028	.056	.062		.073	.069	.073	.006	-.054	-.017	3
4	.054	.016	.021	.020		.038	.027	-.012	-.067	-.044	-.007	4
5	.037	.004	-.002	.002		.014	.023	-.002	-.040	-.163	-.039	5
6	.021	-.001	-.006	-.010		.003	.009	-.023	-.142	-.156	-.132	6
7	.012	.001	-.013	-.019		-.005	-.011	-.026	-.120		-.175	7
8	.008	-.016	-.032	-.028		-.030	-.026	-.051				8
9	.001	-.032	-.044	-.049		-.048	-.029	-.057				9
10	-.003	-.025		-.039		-.042	-.040	-.037				10
11	-.005	-.013		-.038		-.039						11
12	-.002	.003		-.029		-.033	-.037	-.102				12
13	-.011	-.005	-.016	-.026		-.033	-.035	-.026				13
14	-.002	-.005	-.016	-.026		-.026	-.034	-.043				14
15	-.012	-.039	-.037	-.045		-.059	-.053	-.074				15
16	-.047	-.070	-.091	-.076		-.132	-.113	.045				16
18	-.074	-.099	-.098	-.108		-.112	-.102	-.121				18
19	-.074	-.135	-.138	-.147		-.156	-.164	-.159				19
20	-.074	-.152	-.160	-.162		-.172	-.182	-.169				20
21	-.165	-.143	-.162	-.167		-.170	-.180	-.174				21
22	-.089	-.091	-.158	-.154		-.164	-.176	-.176				22

Table 17 Continued

Pressure coefficients on swept wing

Configuration 9 M= 1.61 R= 3.6 x 10^6

Orif	Station 1	2	3	4	24	5	6	7	8	9	10	Orif
					α= 0		δ= 10.0					
1	.856	.763	.752	.571		.726	.610	.855	.925	-.012	.759	1
2	.107	.086	.110	.146		.139	.169	.119	-.021	-.052	-.037	2
3	.053	.027	.056	.064		.072	.068	.185	-.083	-.076	-.058	3
4	.054	.014	.021	.021		.037	.027	.127	-.127	-.047	-.041	4
5	.038	.005	-.002	.003		.012	.023	.028	-.044	-.176	-.099	5
6	.021	-.001	-.005	-.009		.002	.009	-.078	-.145	-.187	-.172	6
7	.012	.000	-.011	-.018		-.008	-.012	-.114	-.134		-.210	7
8	.007	-.016	-.029	-.029		-.030	-.026	-.148				8
9	.002	-.031	-.042	-.048		-.047	-.028	-.163				9
10	-.005	-.026		-.039		-.043	-.039	-.081				10
11	-.005	-.017		-.037		-.039						11
12	-.004	-.005		-.029		-.033	-.037	-.153				12
13	-.008	-.005	-.014	-.026		-.032	-.036	-.045				13
14	-.003	-.006	-.013	-.026		-.025	-.034	-.077				14
15	-.013	-.038	-.035	-.043		-.057	-.052	-.124				15
16	-.050	-.070	-.091	-.077		-.131	-.118	.021				16
18	-.073	-.098	-.095	-.109		-.113	-.099	-.145				18
19	-.076	-.135	-.137	-.149		-.154	-.160	-.187				19
20	-.078	-.152	-.160	-.164		-.172	-.180	-.195				20
21	-.164	-.143	-.161	-.167		-.169	-.182	-.190				21
22	-.091	-.092	-.158	-.156		-.164	-.187	-.186				22
					α= 0		δ= 20.0					
1	.854	.765	.752	.570		.725	.612	.855	.813	-.149	.701	1
2	.106	.086	.110	.146		.140	.171	.105	-.163	-.104	-.230	2
3	.053	.026	.055	.062		.074	.069	-.032	-.161	-.154	-.283	3
4	.053	.014	.020	.019		.038	.034	.351	-.252	-.184	-.174	4
5	.037	.004	-.005	.002		.013	.026	.297	-.068	-.225	-.219	5
6	.020	-.001	-.007	-.010		.003	.013	.259	-.173	-.260	-.243	6
7	.011	-.001	-.013	-.019		-.008	-.008	.104	-.191		-.229	7
8	.006	-.016	-.032	-.030		-.028	-.021	-.280				8
9	.001	-.035	-.044	-.047		-.045	-.026	-.377				9
10	-.005	-.027		-.040		-.039	-.037	-.230				10
11	-.007	-.016		-.038		-.036						11
12	-.005	-.004		-.028		-.029	-.034	-.200				12
13	-.005	-.007	-.018	-.026		-.030	-.032	-.186				13
14	-.001	-.007	-.016	-.026		-.024	-.030	-.226				14
15	-.013	-.040	-.037	-.043		-.056	-.048	-.301				15
16	-.052	-.068	-.092	-.074		-.130	-.116	-.080				16
18	-.074	-.099	-.097	-.108		-.110	-.087	-.281				18
19	-.078	-.135	-.138	-.147		-.151	-.141	-.269				19
20	-.078	-.153	-.161	-.162		-.170	-.167	-.225				20
21	-.162	-.144	-.162	-.167		-.165	-.172	-.196				21
22	-.092	-.091	-.159	-.153		-.161	-.184	-.181				22
					α= 0		δ= 30.0					
1	.852	.759	.751	.573		.722	.611	.852	.399	-.366	.501	1
2	.107	.086	.111	.148		.140	.172	.104	-.250	-.188	-.361	2
3	.053	.026	.057	.066		.074	.071	-.035	-.239	-.250	-.376	3
4	.053	.014	.021	.022		.039	.033	-.003	-.327	-.299	-.247	4
5	.040	.004	.000	.004		.014	.026	.471	-.204	-.294	-.269	5
6	.021	.000	-.004	-.008		.005	.013	.557	-.279	-.314	-.267	6
7	.011	.000	-.010	-.016		-.005	-.009	.514	-.235		-.247	7
8	.006	-.016	-.027	-.029		-.029	-.022	.314				8
9	.001	-.032	-.042	-.047		-.046	-.027	-.389				9
10	-.005	-.026		-.038		-.040	-.038	-.365				10
11	-.006	-.016		-.037		-.037						11
12	-.005	-.005		-.028		-.030	-.033	-.271				12
13	-.005	-.005	-.013	-.025		-.031	-.033	-.235				13
14	-.001	-.006	-.013	-.026		-.023	-.031	-.304				14
15	-.012	-.038	-.035	-.042		-.056	-.044	-.399				15
16	-.055	-.068	-.089	-.073		-.130	-.109	-.162				16
18	-.073	-.098	-.096	-.108		-.112	-.060	-.399				18
19	-.078	-.136	-.136	-.146		-.153	-.117	-.345				19
20	-.078	-.152	-.159	-.162		-.170	-.149	-.275				20
21	-.160	-.144	-.159	-.165		-.168	-.162	-.221				21
22	-.092	-.092	-.156	-.159		-.163	-.185	-.184				22

Table 17 Continued

Pressure coefficients on swept wing

Configuration 9 M=1.61 R=3.6 x 10^6

Orif	Station 1	2	3	4	24	5	6	7	8	9	10	Orif
					α= 3		δ= 0.0					
1	.867	.753	.734	.436		.735	.483	.826	.757	.010	.705	1
2	.059	-.022	-.030	-.028		-.038	-.026	.037	-.003	-.054	-.014	2
3	-.016	-.029	-.029	-.019		-.032	-.021	-.013	-.046	-.082	-.042	3
4	.003	-.047	-.047	-.057		-.047	-.050	-.075	-.088	-.063	-.060	4
5	-.011	-.056	-.066	-.069		-.056	-.066	-.075	-.053	-.171	-.073	5
6	-.029	-.056	-.077	-.078		-.069	-.077	-.091	-.169	-.177	-.182	6
7	-.039	-.054	-.076	-.085		-.084	-.086	-.086	-.145		-.224	7
8	-.045	-.068	-.089	-.099		-.101	-.097	-.101				8
9	-.046	-.080	-.098	-.114		-.113	-.096	-.113				9
10	-.055	-.074		-.108		-.109	-.109	-.091				10
11	-.053	-.067		-.100		-.108						11
12	-.047	-.055		-.090		-.105	-.106	-.133				12
13	-.063	-.056	-.069	-.088		-.106	-.106	-.120				13
14	-.051	-.056	-.067	-.088		-.095	-.106	-.119				14
15	-.057	-.084	-.085	-.099		-.120	-.120	-.110				15
16	-.106	-.102	-.130	-.120		-.180	-.166	.010				16
18	-.115	-.138	-.137	-.155		-.169	-.170	-.173				18
19	-.114	-.172	-.177	-.189		-.208	-.220	-.216				19
20	-.115	-.191	-.195	-.205		-.219	-.232	-.233				20
21	-.199	-.183	-.195	-.204		-.217	-.228	-.228				21
22	-.106	-.102	-.188	-.215		-.210	-.224	-.215				22
					α= 6		δ= -30.					
1	.875	.637	.637	.215		.752	.312	.865	1.046	.451	-.029	1
2	.004	-.141	-.156	-.164		-.175	-.173	-.120	.611	.295	.190	2
3	-.089	-.134	-.142	-.146		-.162	-.155	-.116	.445	-.162	.008	3
4	-.057	-.117	-.164	-.166		-.171	-.178	-.170	-.301	-.042	-.064	4
5	-.069	-.125	-.172	-.175		-.172	-.176	-.090	-.186	-.084	-.017	5
6	-.082	-.120	-.166	-.183		-.179	-.180	-.203	-.159	-.098	-.100	6
7	-.091	-.115	-.148	-.190		-.184	-.196	-.274	-.119		-.126	7
8	-.100	-.124	-.159	-.197		-.200	-.201	-.294				8
9	-.102	-.135	-.165	-.212		-.210	-.203	-.312				9
10	-.103	-.124		-.198		-.204	-.210	-.279				10
11	-.106	-.117		-.183		-.204						11
12	-.104	-.106		-.168		-.203	-.200	-.323				12
13	-.106	-.109	-.131	-.162		-.203	-.201	-.312				13
14	-.098	-.110	-.130	-.155		-.192	-.201	-.298				14
15	-.106	-.130	-.142	-.168		-.213	-.211	-.280				15
16	-.157	-.138	-.174	-.178		-.256	-.230	-.109				16
18	-.159	-.179	-.184	-.214		-.258	-.255	-.305				18
19	-.172	-.211	-.219	-.241		-.284	-.291	-.336				19
20	-.168	-.228	-.236	-.253		-.285	-.281	-.349				20
21	-.230	-.223	-.236	-.255		-.277	-.261	-.359				21
22	-.129	-.102	-.202	-.214		-.261	-.245	-.370				22
					α= 6		δ= -20.					
1	.875	.635	.637	.214		.753	.309	.863	1.020	.231	.278	1
2	.002	-.142	-.158	-.164		-.173	-.173	-.120	.329	.060	.016	2
3	-.088	-.137	-.144	-.146		-.161	-.156	-.115	.187	-.196	-.055	3
4	-.058	-.117	-.166	-.168		-.172	-.178	-.124	-.282	-.098	-.054	4
5	-.067	-.126	-.173	-.175		-.170	-.176	-.151	-.200	-.169	-.058	5
6	-.084	-.120	-.168	-.183		-.176	-.179	-.259	-.223	-.175	-.150	6
7	-.090	-.115	-.149	-.190		-.183	-.193	-.301	-.169		-.204	7
8	-.101	-.124	-.161	-.198		-.196	-.203	-.328				8
9	-.102	-.135	-.166	-.212		-.210	-.203	-.320				9
10	-.102	-.129		-.199		-.205	-.210	-.249				10
11	-.108	-.120		-.185		-.205						11
12	-.108	-.107		-.170		-.201	-.201	-.291				12
13	-.108	-.110	-.131	-.163		-.203	-.204	-.254				13
14	-.099	-.110	-.126	-.158		-.193	-.204	-.248				14
15	-.110	-.132	-.141	-.166		-.212	-.214	-.243				15
16	-.159	-.138	-.175	-.177		-.257	-.235	-.080				16
18	-.160	-.182	-.186	-.214		-.256	-.254	-.270				18
19	-.170	-.214	-.218	-.243		-.283	-.292	-.301				19
20	-.172	-.230	-.236	-.253		-.282	-.286	-.334				20
21	-.228	-.224	-.236	-.252		-.277	-.274	-.344				21
22	-.129	-.100	-.200	-.214		-.263	-.266	-.369				22

Table 17 Continued

Pressure coefficients on swept wing

Configuration 9 M= 1.61 R= 3.6 x 10^6

Orif	Station 1	2	3	4	24	5	6	7	8	9	10	Orif
					α= 6		δ= -10.					
1	.879	.641	.639	.220		.759	.312	.863	.986	-.016	.604	1
2	.006	-.138	-.154	-.162		-.171	-.171	-.106	.018	-.134	-.043	2
3	-.083	-.131	-.140	-.144		-.158	-.151	-.085	-.353	-.179	-.057	3
4	-.055	-.112	-.161	-.163		-.168	-.175	-.162	-.196	-.126	-.145	4
5	-.064	-.121	-.170	-.172		-.166	-.175	-.188	-.150	-.220	-.113	5
6	-.078	-.115	-.164	-.183		-.177	-.177	-.213	-.245	-.238	-.239	6
7	-.089	-.109	-.145	-.184		-.180	-.192	-.189	-.197		-.304	7
8	-.097	-.121	-.159	-.195		-.195	-.201	-.187				8
9	-.098	-.130	-.164	-.211		-.208	-.202	-.215				9
10	-.100	-.121		-.195		-.203	-.206	-.197				10
11	-.101	-.116		-.179		-.203						11
12	-.103	-.100		-.163		-.200	-.197	-.245				12
13	-.101	-.104	-.128	-.156		-.201	-.200	-.248				13
14	-.096	-.103	-.124	-.155		-.191	-.202	-.236				14
15	-.103	-.127	-.141	-.167		-.210	-.211	-.224				15
16	-.158	-.134	-.172	-.176		-.254	-.237	-.078				16
18	-.153	-.176	-.183	-.207		-.253	-.250	-.278				18
19	-.165	-.208	-.216	-.237		-.280	-.290	-.300				19
20	-.166	-.225	-.235	-.248		-.283	-.288	-.307				20
21	-.224	-.219	-.235	-.249		-.276	-.287	-.303				21
22	-.123	-.099	-.200	-.213		-.261	-.283	-.343				22
					α= 6		δ= - 5.					
1	.878	.641	.641	.220		.752	.317	.864	.936	-.141	.676	1
2	.005	-.139	-.153	-.162		-.172	-.169	-.071	-.313	-.199	-.134	2
3	-.085	-.129	-.142	-.144		-.159	-.151	-.115	-.240	-.193	-.165	3
4	-.053	-.111	-.162	-.164		-.171	-.172	-.196	-.231	-.164	-.188	4
5	-.064	-.121	-.172	-.172		-.172	-.173	-.186	-.172	-.262	-.209	5
6	-.081	-.117	-.167	-.179		-.176	-.176	-.173	-.270	-.295	-.306	6
7	-.090	-.111	-.144	-.186		-.184	-.189	-.181	-.228		-.323	7
8	-.099	-.120	-.160	-.197		-.193	-.198	-.218				8
9	-.098	-.134	-.163	-.211		-.206	-.200	-.236				9
10	-.099	-.124		-.195		-.202	-.206	-.225				10
11	-.103	-.116		-.183		-.203						11
12	-.101	-.109		-.166		-.201	-.196	-.221				12
13	-.103	-.105	-.127	-.158		-.200	-.199	-.220				13
14	-.098	-.105	-.125	-.155		-.189	-.198	-.225				14
15	-.108	-.130	-.141	-.166		-.210	-.206	-.220				15
16	-.159	-.135	-.172	-.177		-.253	-.234	-.074				16
18	-.157	-.179	-.184	-.210		-.253	-.246	-.275				18
19	-.167	-.209	-.218	-.241		-.280	-.286	-.312				19
20	-.166	-.227	-.236	-.253		-.282	-.297	-.313				20
21	-.223	-.221	-.235	-.250		-.275	-.291	-.293				21
22	-.122	-.097	-.199	-.214		-.259	-.289	-.317				22
					α= 6		δ= 0.0					
1	.876	.639	.637	.216		.752	.316	.863	.666	-.138	.728	1
2	.006	-.140	-.153	-.165		-.170	-.168	-.157	-.125	-.156	-.122	2
3	-.086	-.133	-.141	-.144		-.157	-.151	-.199	-.153	-.164	-.159	3
4	-.054	-.116	-.162	-.164		-.170	-.174	-.228	-.176	-.143	-.169	4
5	-.065	-.124	-.171	-.172		-.170	-.171	-.228	-.144	-.249	-.300	5
6	-.082	-.118	-.166	-.181		-.176	-.175	-.230	-.226	-.259	-.307	6
7	-.086	-.113	-.147	-.186		-.183	-.190	-.228	-.192		-.311	7
8	-.100	-.123	-.159	-.194		-.193	-.198	-.233				8
9	-.098	-.131	-.162	-.208		-.207	-.199	-.227				9
10	-.100	-.124		-.196		-.201	-.205	-.213				10
11	-.103	-.118		-.182		-.202						11
12	-.102	-.106		-.166		-.196	-.196	-.187				12
13	-.102	-.108	-.128	-.159		-.198	-.198	-.214				13
14	-.097	-.105	-.123	-.155		-.190	-.197	-.208				14
15	-.103	-.130	-.141	-.167		-.212	-.205	-.198				15
16	-.158	-.135	-.172	-.177		-.251	-.236	-.048				16
18	-.155	-.176	-.183	-.207		-.253	-.250	-.277				18
19	-.169	-.207	-.215	-.235		-.282	-.290	-.304				19
20	-.165	-.224	-.234	-.250		-.280	-.299	-.314				20
21	-.224	-.220	-.234	-.250		-.274	-.298	-.312				21
22	-.125	-.099	-.201	-.249		-.259	-.293	-.280				22

Table 17 Continued

Pressure coefficients on swept wing

Configuration 9 M= 1.61 R= 3.6 x 10^6

Orif	Station 1	2	3	4	24	5	6	7	8	9	10	Orif
					α= 6		δ= 5.0					
1	.876	.636	.633	.219		.750	.315	.864	.806	-.211	.731	1
2	.001	-.141	-.157	-.164		-.172	-.167	.167	-.126	-.186	-.235	2
3	-.087	-.134	-.144	-.148		-.161	-.151	-.094	-.206	-.189	-.231	3
4	-.054	-.117	-.166	-.169		-.172	-.174	-.400	-.202	-.175	-.286	4
5	-.068	-.128	-.173	-.174		-.172	-.172	-.350	-.174	-.269	-.357	5
6	-.082	-.119	-.171	-.183		-.180	-.176	-.308	-.239	-.289	-.339	6
7	-.092	-.113	-.151	-.188		-.184	-.193	-.298	-.198		-.316	7
8	-.100	-.122	-.161	-.196		-.194	-.200	-.289				8
9	-.100	-.136	-.167	-.214		-.211	-.198	-.276				9
10	-.102	-.128		-.199		-.203	-.205	-.221				10
11	-.104	-.120		-.186		-.203						11
12	-.105	-.105		-.169		-.202	-.195	-.211				12
13	-.108	-.109	-.131	-.162		-.202	-.198	-.206				13
14	-.099	-.108	-.129	-.157		-.190	-.198	-.208				14
15	-.108	-.130	-.142	-.171		-.211	-.206	-.204				15
16	-.159	-.137	-.174	-.177		-.253	-.239	-.036				16
18	-.158	-.180	-.184	-.212		-.253	-.246	-.248				18
19	-.171	-.212	-.221	-.238		-.280	-.287	-.300				19
20	-.168	-.230	-.238	-.254		-.280	-.303	-.312				20
21	-.226	-.224	-.237	-.254		-.276	-.308	-.302				21
22	-.129	-.105	-.203	-.254		-.260	-.308	-.289				22
					α= 6		δ= 10.0					
1	.881	.636	.640	.217		.749	.316	.861	.791	-.287	.712	1
2	.005	-.142	-.155	-.164		-.172	-.170	-.111	-.169	-.194	-.314	2
3	-.086	-.134	-.142	-.147		-.162	-.151	.256	-.223	-.237	-.349	3
4	-.056	-.114	-.163	-.166		-.170	-.175	.181	-.246	-.206	-.338	4
5	-.068	-.125	-.172	-.174		-.171	-.173	.011	-.188	-.299	-.389	5
6	-.082	-.120	-.169	-.183		-.176	-.177	-.443	-.237	-.312	-.366	6
7	-.090	-.117	-.150	-.193		-.183	-.190	-.422	-.221		-.317	7
8	-.099	-.124	-.161	-.200		-.196	-.200	-.375				8
9	-.101	-.136	-.164	-.214		-.208	-.201	-.322				9
10	-.102	-.125		-.199		-.201	-.206	-.308				10
11	-.103	-.120		-.185		-.204						11
12	-.104	-.107		-.170		-.202	-.197	-.219				12
13	-.106	-.109	-.129	-.162		-.202	-.201	-.141				13
14	-.098	-.106	-.126	-.156		-.191	-.199	-.167				14
15	-.107	-.130	-.143	-.170		-.211	-.205	-.212				15
16	-.160	-.138	-.172	-.180		-.256	-.242	-.060				16
18	-.156	-.180	-.185	-.213		-.256	-.237	-.222				18
19	-.169	-.211	-.218	-.242		-.279	-.277	-.250				19
20	-.168	-.227	-.238	-.256		-.282	-.294	-.272				20
21	-.225	-.222	-.235	-.255		-.276	-.305	-.268				21
22	-.124	-.101	-.203	-.254		-.262	-.318	-.260				22
					α= 6		δ= 20.0					
1	.877	.638	.639	.220		.756	.318	.863	.488	-.360	.584	1
2	.004	-.141	-.153	-.164		-.171	-.167	-.114	-.248	-.260	-.384	2
3	-.086	-.131	-.142	-.147		-.158	-.151	-.099	-.272	-.280	-.404	3
4	-.054	-.115	-.162	-.164		-.168	-.172	.275	-.341	-.291	-.360	4
5	-.061	-.124	-.170	-.172		-.171	-.172	.496	-.260	-.326	-.402	5
6	-.080	-.115	-.165	-.181		-.176	-.175	.433	-.283	-.332	-.372	6
7	-.089	-.111	-.146	-.185		-.183	-.190	.258	-.286		-.302	7
8	-.099	-.124	-.160	-.195		-.193	-.197	-.445				8
9	-.099	-.133	-.165	-.210		-.206	-.197	-.427				9
10	-.100	-.123		-.197		-.201	-.204	-.426				10
11	-.102	-.119		-.183		-.203						11
12	-.104	-.111		-.168		-.197	-.197	-.227				12
13	-.105	-.105	-.128	-.158		-.201	-.197	.123				13
14	-.099	-.104	-.124	-.153		-.188	-.197	.046				14
15	-.107	-.131	-.139	-.166		-.207	-.183	-.219				15
16	-.160	-.132	-.170	-.176		-.253	-.225	-.072				16
18	-.156	-.177	-.183	-.209		-.253	-.201	-.223				18
19	-.170	-.209	-.219	-.236		-.276	-.234	-.208				19
20	-.168	-.226	-.237	-.252		-.281	-.279	-.194				20
21	-.224	-.219	-.235	-.252		-.274	-.292	-.179				21
22	-.124	-.099	-.204	-.253		-.259	-.311	-.172				22

Table 17 Continued

Pressure coefficients on swept wing

Configuration 9 M=1.61 R=3.6 x 10^6

Orif	Station 1	2	3	4	24	5	6	7	8	9	10	Orif
					α= 6		δ= 30.0					
1	.875	.636	.638	.218		.752	.319	.861	.157	-.423	.313	1
2	.005	-.143	-.154	-.163		-.171	-.165	-.120	-.320	-.352	-.433	2
3	-.083	-.134	-.142	-.145		-.156	-.146	-.081	-.345	-.337	-.442	3
4	-.054	-.116	-.162	-.165		-.170	-.171	-.035	-.391	-.384	-.376	4
5	-.062	-.125	-.170	-.172		-.171	-.170	.133	-.344	-.346	-.412	5
6	-.081	-.116	-.167	-.180		-.176	-.172	.829	-.352	-.393	-.351	6
7	-.089	-.112	-.148	-.189		-.181	-.186	.753	-.328		-.302	7
8	-.100	-.122	-.162	-.197		-.191	-.195	.515				8
9	-.102	-.133	-.163	-.212		-.204	-.195	-.481				9
10	-.103	-.129		-.195		-.199	-.203	-.482				10
11	-.105	-.119		-.181		-.201						11
12	-.105	-.109		-.167		-.197	-.192	-.307				12
13	-.108	-.109	-.129	-.160		-.199	-.196	-.167				13
14	-.096	-.105	-.127	-.154		-.187	-.175	-.254				14
15	-.107	-.130	-.141	-.168		-.208	-.130	-.368				15
16	-.163	-.131	-.171	-.175		-.251	-.202	-.161				16
18	-.157	-.178	-.183	-.213		-.250	-.162	-.374				18
19	-.169	-.207	-.218	-.240		-.277	-.234	-.416				19
20	-.169	-.226	-.238	-.253		-.279	-.265	-.303				20
21	-.223	-.223	-.235	-.250		-.272	-.285	-.225				21
22	-.126	-.102	-.203	-.245		-.259	-.310	-.144				22
					α= 9		δ= 0.0					
1	.899	.369	.424	-.035		.727	.135	.975	.494	-.226	.699	1
2	-.059	-.238	-.255	-.267		-.282	-.291	-.343	-.190	-.226	-.238	2
3	-.150	-.235	-.242	-.252		-.264	-.267	-.360	-.213	-.237	-.268	3
4	-.108	-.228	-.256	-.263		-.270	-.280	-.359	-.251	-.222	-.318	4
5	-.120	-.182	-.264	-.268		-.268	-.272	-.351	-.216	-.299	-.360	5
6	-.132	-.182	-.264	-.268		-.270	-.276	-.349	-.274	-.312	-.349	6
7	-.141	-.170	-.265	-.270		-.268	-.282	-.333	-.238		-.344	7
8	-.153	-.178	-.271	-.273		-.282	-.284	-.331				8.
9	-.151	-.186	-.251	-.287		-.289	-.284	-.325				9
10	-.150	-.176		-.278		-.284	-.284	-.312				10
11	-.155	-.169		-.279		-.279						11
12	-.153	-.153		-.276		-.277	-.280	-.339				12
13	-.158	-.161	-.187	-.272		-.276	-.279	-.299				13
14	-.148	-.157	-.183	-.266		-.269	-.281	-.303				14
15	-.157	-.180	-.196	-.263		-.283	-.284	-.300				15
16	-.206	-.175	-.216	-.261		-.313	-.298	-.126				16
18	-.199	-.221	-.230	-.283		-.322	-.318	-.372				18
19	-.214	-.247	-.261	-.295		-.348	-.349	-.384				19
20	-.216	-.263	-.273	-.301		-.355	-.355	-.396				20
21	-.261	-.260	-.272	-.296		-.355	-.353	-.382				21
22	-.154	-.107	-.161	-.239		-.278	-.328	-.323				22
					α= 12		δ= -30.					
1	.954	.205	.175	-.231		.635	-.019	.852	1.058	.481	.068	1
2	-.099	-.314	-.333	-.356		-.372	-.395	-.467	.716	.235	.126	2
3	-.188	-.307	-.321	-.335		-.350	-.367	-.485	.545	-.374	-.034	3
4	-.148	-.308	-.326	-.336		-.349	-.361	-.494	-.452	-.219	-.097	4
5	-.159	-.281	-.329	-.339		-.345	-.356	-.513	-.386	-.275	-.225	5
6	-.171	-.236	-.330	-.339		-.339	-.350	-.498	-.338	-.256	-.277	6
7	-.178	-.220	-.329	-.339		-.342	-.354	-.491	-.236		-.343	7
8	-.185	-.224	-.338	-.340		-.347	-.356	-.489				8
9	-.190	-.232	-.342	-.352		-.352	-.354	-.482				9
10	-.193	-.219		-.346		-.349	-.354	-.480				10
11	-.193	-.213		-.343		-.346						11
12	-.193	-.203		-.339		-.341	-.349	-.458				12
13	-.195	-.203	-.245	-.335		-.341	-.347	-.475				13
14	-.188	-.198	-.236	-.336		-.332	-.345	-.453				14
15	-.197	-.216	-.245	-.343		-.343	-.349	-.411				15
16	-.242	-.214	-.261	-.343		-.366	-.355	-.179				16
18	-.234	-.254	-.273	-.367		-.377	-.377	-.436				18
19	-.248	-.279	-.298	-.390		-.398	-.394	-.435				19
20	-.246	-.296	-.310	-.393		-.405	-.383	-.444				20
21	-.290	-.292	-.308	-.376		-.405	-.377	-.454				21
22	-.183	-.120	-.153	-.214		-.256	-.256	-.450				22

Table 17 Continued

Pressure coefficients on swept wing

Configuration 9 M=1.61 R=3.6 x 10^6

Orif	Station 1	2	3	4	24	5	6	7	8	9	10	Orif
					α= 12		δ= -20.					
1	.952	.207	.176	-.230		.636	-.016	.852	1.012	.200	.487	1
2	-.099	-.312	-.333	-.355		-.369	-.396	-.464	.503	-.061	.009	2
3	-.191	-.302	-.318	-.334		-.349	-.365	-.486	.236	-.385	-.027	3
4	-.144	-.309	-.325	-.335		-.347	-.362	-.493	-.409	-.238	-.239	4
5	-.160	-.283	-.327	-.336		-.344	-.356	-.500	-.348	-.349	-.338	5
6	-.172	-.237	-.328	-.337		-.342	-.350	-.492	-.360	-.351	-.432	6
7	-.178	-.222	-.329	-.335		-.341	-.352	-.484	-.280		-.455	7
8	-.186	-.224	-.337	-.339		-.347	-.354	-.476				8
9	-.189	-.231	-.341	-.349		-.353	-.352	-.463				9
10	-.193	-.219		-.344		-.350	-.352	-.453				10
11	-.193	-.215		-.342		-.349						11
12	-.193	-.197		-.335		-.341	-.347	-.415				12
13	-.194	-.203	-.246	-.334		-.342	-.345	-.417				13
14	-.187	-.198	-.236	-.335		-.333	-.343	-.400				14
15	-.195	-.215	-.245	-.342		-.345	-.346	-.382				15
16	-.242	-.212	-.260	-.339		-.368	-.352	-.164				16
18	-.232	-.253	-.272	-.368		-.378	-.374	-.445				18
19	-.245	-.277	-.299	-.391		-.398	-.390	-.421				19
20	-.247	-.292	-.311	-.391		-.405	-.383	-.434				20
21	-.292	-.292	-.308	-.374		-.405	-.381	-.443				21
22	-.182	-.118	-.151	-.214		-.257	-.268	-.450				22
					α= 12		δ= -10.					
1	.956	.207	.175	-.232		.632	-.016	.860	.944	-.106	.696	1
2	-.100	-.311	-.333	-.355		-.371	-.395	-.470	-.021	-.341	-.088	2
3	-.187	-.304	-.318	-.333		-.348	-.368	-.475	-.434	-.353	-.176	3
4	-.143	-.309	-.327	-.332		-.350	-.360	-.478	-.333	-.298	-.305	4
5	-.158	-.283	-.326	-.336		-.345	-.355	-.480	-.300	-.379	-.480	5
6	-.169	-.236	-.327	-.337		-.344	-.350	-.465	-.384	-.416	-.467	6
7	-.177	-.220	-.329	-.336		-.343	-.354	-.444	-.305		-.460	7
8	-.184	-.224	-.336	-.340		-.347	-.355	-.426				8
9	-.188	-.231	-.344	-.350		-.353	-.353	-.404				9
10	-.192	-.219		-.343		-.349	-.353	-.379				10
11	-.194	-.215		-.341		-.347						11
12	-.192	-.200		-.336		-.342	-.348	-.370				12
13	-.193	-.203	-.245	-.335		-.339	-.345	-.379				13
14	-.187	-.196	-.235	-.337		-.333	-.344	-.394				14
15	-.195	-.217	-.245	-.345		-.347	-.349	-.407				15
16	-.243	-.210	-.260	-.341		-.368	-.356	-.180				16
18	-.232	-.254	-.272	-.366		-.377	-.377	-.433				18
19	-.244	-.278	-.298	-.386		-.396	-.395	-.426				19
20	-.246	-.296	-.311	-.392		-.404	-.395	-.407				20
21	-.290	-.290	-.308	-.400		-.406	-.397	-.402				21
22	-.181	-.119	-.151	-.214		-.257	-.280	-.427				22
					α= 12		δ= - 5.					
1	.954	.205	.177	-.229		.634	-.015	.892	.791	-.366	.647	1
2	-.104	-.313	-.333	-.353		-.370	-.393	-.443	-.408	-.408	-.387	2
3	-.187	-.306	-.318	-.330		-.349	-.362	-.413	-.373	-.355	-.397	3
4	-.147	-.308	-.326	-.330		-.346	-.357	-.396	-.350	-.329	-.419	4
5	-.160	-.284	-.325	-.332		-.341	-.353	-.388	-.326	-.432	-.488	5
6	-.173	-.237	-.325	-.333		-.339	-.349	-.374	-.407	-.457	-.460	6
7	-.178	-.223	-.329	-.333		-.339	-.349	-.370	-.321		-.443	7
8	-.188	-.222	-.337	-.337		-.346	-.352	-.378				8
9	-.187	-.230	-.339	-.351		-.351	-.351	-.402				9
10	-.190	-.216		-.337		-.349	-.349	-.384				10
11	-.191	-.214		-.339		-.345						11
12	-.192	-.202		-.332		-.339	-.342	-.391				12
13	-.193	-.201	-.244	-.332		-.339	-.339	-.353				13
14	-.187	-.196	-.233	-.333		-.330	-.339	-.374				14
15	-.193	-.215	-.244	-.340		-.343	-.341	-.390				15
16	-.240	-.210	-.258	-.337		-.363	-.349	-.170				16
18	-.229	-.253	-.272	-.365		-.374	-.370	-.426				18
19	-.244	-.278	-.297	-.386		-.394	-.394	-.433				19
20	-.245	-.293	-.308	-.390		-.402	-.402	-.427				20
21	-.291	-.291	-.305	-.395		-.402	-.402	-.404				21
22	-.183	-.117	-.152	-.213		-.256	-.275	-.353				22

Table 17 Continued

Pressure coefficients on swept wing

Configuration 9 M= 1.61 R= 3.6 x 10^6

Orif	Station 1	2	3	4	24	5	6	7	8	9	10	Orif
					α= 12		δ= 0.0					
1	.955	.209	.177	-.234		.636	-.012	.850	.194	-.348	.593	1
2	-.099	-.312	-.333	-.353		-.366	-.390	-.463	-.320	-.330	-.363	2
3	-.187	-.302	-.320	-.333		-.346	-.362	-.454	-.313	-.316	-.408	3
4	-.147	-.311	-.328	-.335		-.346	-.358	-.446	-.308	-.313	-.396	4
5	-.157	-.280	-.329	-.334		-.339	-.353	-.423	-.281	-.391	-.447	5
6	-.172	-.238	-.328	-.338		-.339	-.349	-.421	-.347	-.407	-.434	6
7	-.180	-.221	-.328	-.337		-.341	-.349	-.409	-.285		-.427	7
8	-.184	-.222	-.335	-.338		-.346	-.351	-.407				8
9	-.190	-.229	-.342	-.349		-.354	-.350	-.396				9
10	-.191	-.220		-.340		-.349	-.349	-.381				10
11	-.193	-.214		-.339		-.345						11
12	-.193	-.202		-.336		-.339	-.344	-.408				12
13	-.195	-.203	-.249	-.332		-.340	-.342	-.390				13
14	-.187	-.194	-.235	-.334		-.333	-.342	-.389				14
15	-.196	-.215	-.246	-.339		-.346	-.344	-.386				15
16	-.242	-.211	-.259	-.339		-.366	-.354	-.173				16
18	-.230	-.255	-.275	-.362		-.378	-.373	-.449				18
19	-.244	-.279	-.297	-.382		-.394	-.397	-.447				19
20	-.245	-.293	-.308	-.388		-.402	-.404	-.433				20
21	-.290	-.292	-.308	-.370		-.404	-.401	-.406				21
22	-.177	-.120	-.153	-.211		-.261	-.275	-.348				22
					α= 12		δ= 5.0					
1	.955	.210	.179	-.232		.636	-.012	.851	.443	-.385	.516	1
2	-.098	-.310	-.331	-.351		-.369	-.391	.184	-.340	-.351	-.410	2
3	-.184	-.304	-.318	-.330		-.346	-.362	-.439	-.345	-.343	-.443	3
4	-.145	-.308	-.323	-.333		-.346	-.357	-.477	-.332	-.352	-.406	4
5	-.154	-.279	-.325	-.334		-.341	-.353	-.459	-.306	-.411	-.466	5
6	-.169	-.234	-.326	-.333		-.339	-.349	-.446	-.360	-.419	-.452	6
7	-.176	-.218	-.326	-.334		-.339	-.350	-.433	-.304		-.433	7
8	-.184	-.224	-.333	-.338		-.346	-.354	-.424				8
9	-.188	-.226	-.342	-.351		-.351	-.350	-.406				9
10	-.189	-.216		-.339		-.348	-.351	-.394				10
11	-.192	-.211		-.339		-.344						11
12	-.192	-.200		-.333		-.340	-.346	-.401				12
13	-.193	-.200	-.245	-.333		-.339	-.345	-.373				13
14	-.186	-.194	-.235	-.333		-.332	-.343	-.377				14
15	-.194	-.214	-.244	-.340		-.343	-.341	-.376				15
16	-.244	-.209	-.257	-.337		-.364	-.352	-.162				16
18	-.229	-.251	-.269	-.363		-.377	-.370	-.421				18
19	-.244	-.276	-.297	-.385		-.395	-.396	-.430				19
20	-.245	-.292	-.306	-.389		-.405	-.406	-.430				20
21	-.289	-.291	-.306	-.371		-.406	-.410	-.424				21
22	-.182	-.116	-.148	-.212		-.260	-.286	-.369				22
					α= 12		δ= 10.0					
1	.954	.208	.179	-.231		.638	-.008	.853	.370	-.407	.443	1
2	-.101	-.311	-.333	-.354		-.367	-.393	-.259	-.343	-.378	-.436	2
3	-.184	-.303	-.318	-.331		-.347	-.363	.221	-.362	-.366	-.462	3
4	-.142	-.309	-.323	-.334		-.345	-.359	.211	-.360	-.378	-.415	4
5	-.158	-.281	-.328	-.335		-.342	-.354	-.126	-.314	-.432	-.481	5
6	-.172	-.238	-.329	-.335		-.338	-.347	-.471	-.380	-.416	-.467	6
7	-.178	-.221	-.329	-.335		-.338	-.351	-.462	-.325		-.441	7
8	-.188	-.222	-.336	-.339		-.345	-.351	-.450				8
9	-.188	-.229	-.342	-.350		-.351	-.349	-.438				9
10	-.192	-.217		-.340		-.349	-.349	-.437				10
11	-.192	-.212		-.340		-.345						11
12	-.192	-.200		-.334		-.342	-.345	-.349				12
13	-.194	-.202	-.245	-.333		-.340	-.342	-.323				13
14	-.185	-.196	-.235	-.335		-.330	-.334	-.333				14
15	-.193	-.215	-.245	-.341		-.342	-.321	-.363				15
16	-.243	-.213	-.257	-.338		-.363	-.341	-.158				16
18	-.229	-.252	-.271	-.365		-.375	-.350	-.399				18
19	-.245	-.278	-.297	-.386		-.396	-.388	-.405				19
20	-.245	-.292	-.310	-.391		-.405	-.401	-.422				20
21	-.288	-.292	-.307	-.372		-.404	-.408	-.403				21
22	-.181	-.118	-.151	-.212		-.256	-.302	-.390				22

Table 17 Concluded

Pressure coefficients on swept wing

Configuration 9 M= 1.61 R= 3.6 x 10^6

Orif	Station 1	2	3	4	24	5	6	7	8	9	10	Orif
					α= 12		δ= 20.0					
1	.950	.205	.177	-.228		.638	-.012	.851	.160	-.441	.252	1
2	-.099	-.311	-.331	-.351		-.366	-.393	-.249	-.349	-.419	-.459	2
3	-.187	-.302	-.318	-.330		-.349	-.361	-.259	-.405	-.392	-.478	3
4	-.144	-.308	-.325	-.332		-.342	-.357	-.032	-.401	-.415	-.418	4
5	-.157	-.281	-.326	-.333		-.341	-.351	.692	-.361	-.436	-.486	5
6	-.171	-.235	-.327	-.335		-.338	-.349	.602	-.414	-.441	-.461	6
7	-.176	-.218	-.325	-.334		-.339	-.351	.261	-.347		-.422	7
8	-.187	-.221	-.335	-.336		-.343	-.351	-.488				8
9	-.187	-.225	-.341	-.349		-.352	-.351	-.484				9
10	-.189	-.217		-.338		-.349	-.351	-.480				10
11	-.194	-.213		-.338		-.344						11
12	-.193	-.201		-.333		-.339	-.343	-.314				12
13	-.194	-.201	-.244	-.333		-.339	-.290	-.101				13
14	-.187	-.196	-.235	-.334		-.330	-.273	-.200				14
15	-.194	-.214	-.245	-.339		-.342	-.293	-.366				15
16	-.244	-.210	-.256	-.338		-.364	-.323	-.161				16
18	-.230	-.255	-.269	-.363		-.376	-.336	-.347				18
19	-.245	-.277	-.293	-.387		-.393	-.381	-.373				19
20	-.248	-.292	-.310	-.390		-.403	-.399	-.349				20
21	-.289	-.290	-.305	-.369		-.404	-.409	-.333				21
22	-.181	-.120	-.151	-.212		-.250	-.334	-.339				22
					α= 12		δ= 30.0					
1	.954	.209	.177	-.225		.633	-.013	.856	-.007	-.464	-.023	1
2	-.100	-.311	-.333	-.355		-.368	-.391	-.188	-.378	-.449	-.474	2
3	-.187	-.301	-.318	-.332		-.348	-.361	-.197	-.433	-.426	-.486	3
4	-.146	-.309	-.326	-.333		-.345	-.358	-.225	-.424	-.433	-.419	4
5	-.159	-.282	-.327	-.336		-.343	-.355	-.049	-.405	-.453	-.482	5
6	-.170	-.234	-.326	-.336		-.339	-.349	1.010	-.436	-.457	-.441	6
7	-.175	-.221	-.326	-.334		-.339	-.352	.970	-.355		-.428	7
8	-.184	-.220	-.336	-.339		-.345	-.352	.598				8
9	-.190	-.228	-.341	-.352		-.352	-.350	-.460				9
10	-.190	-.220		-.341		-.348	-.351	-.467				10
11	-.195	-.212		-.340		-.343						11
12	-.193	-.200		-.334		-.339	-.245	-.352				12
13	-.193	-.202	-.245	-.333		-.338	-.245	-.008				13
14	-.187	-.197	-.235	-.334		-.329	-.257	-.160				14
15	-.193	-.214	-.245	-.339		-.342	-.280	-.396				15
16	-.243	-.211	-.258	-.338		-.366	-.316	-.177				16
18	-.231	-.252	-.270	-.362		-.373	-.333	-.400				18
19	-.245	-.277	-.296	-.387		-.402	-.385	-.398				19
20	-.246	-.296	-.309	-.389		-.402	-.407	-.377				20
21	-.288	-.290	-.308	-.409		-.404	-.411	-.367				21
22	-.181	-.119	-.148	-.211		-.224	-.396	-.342				22
					α= 15		δ= 0.0					
1	.983	.057	-.041	-.383		.440	-.221	.698	-.100	-.370	.328	1
2	-.133	-.371	-.394	-.428		-.443	-.462	-.485	-.324	-.357	-.364	2
3	-.218	-.356	-.377	-.398		-.420	-.442	-.442	-.311	-.395	-.392	3
4	-.183	-.358	-.376	-.393		-.411	-.428	-.462	-.391	-.387	-.380	4
5	-.193	-.352	-.376	-.387		-.406	-.421	-.488	-.353	-.426	-.438	5
6	-.202	-.302	-.374	-.386		-.400	-.418	-.479	-.394	-.408	-.424	6
7	-.209	-.268	-.376	-.388		-.396	-.417	-.473	-.313		-.431	7
8	-.217	-.263	-.381	-.388		-.402	-.412	-.470				8
9	-.220	-.263	-.385	-.393		-.403	-.412	-.457				9
10	-.222	-.252		-.387		-.400	-.409	-.451				10
11	-.224	-.249		-.385		-.396						11
12	-.224	-.233		-.381		-.391	-.402	-.471				12
13	-.224	-.234	-.308	-.380		-.388	-.396	-.481				13
14	-.217	-.230	-.288	-.378		-.383	-.396	-.469				14
15	-.224	-.246	-.297	-.381		-.392	-.393	-.454				15
16	-.270	-.237	-.301	-.380		-.403	-.394	-.199				16
18	-.257	-.278	-.314	-.400		-.415	-.414	-.478				18
19	-.270	-.300	-.334	-.417		-.432	-.431	-.476				19
20	-.263	-.318	-.341	-.423		-.422	-.433	-.473				20
21	-.313	-.315	-.338	-.283		-.303	-.318	-.444				21
22	-.197	-.123	-.179	-.261		-.294	-.291	-.391				22

Table 18

Pressure coefficients on swept wing

Configuration 21 M=1.61 R=3.6 x 10^6

Orif	Station 1	2	3	4	24	5	6	7	8	9	10	Orif
					α=-15		δ= 0.0					
1	.609	.665	.652	.474		-.260	.126	-.374				1
2	.469	.590	.641	.802		.865	.892	.627				2
3	.461	.514	.585	.792		.853	.878	.537				3
4	.438	.454	.544	.771		.824	.850	.440				4
5	.422	.446	.674	.773		.822	.839	.359				5
6	.392	.448	.745	.780		.824	.831	.359				6
7	.398	.426	.776	.790		.833	.838	.352				7
8	.415	.697	.819	.817		.849	.848	.361				8
9	.422	.862	.850	.858		.880	.870	.337				9
10	.592	.915		.904		.919	.888	.340				10
11	.819	.912		.932		.936						11
12	.927	.757		.939		.939	.896	.219				12
13	1.099	.905	.897	.951		.940	.893	.167				13
14	-.339	-.193	-.189	-.198		-.276	-.300	-.455				14
15	.295	-.197	-.187	-.197		-.235	-.287	-.401				15
16	.774	-.204	-.198	-.208		-.247	-.300	-.232				16
17		-.098	-.156	-.180		-.256	-.230	-.409				17
18		-.084	-.161	-.213		-.251	-.290	-.378				18
19	.436	.072	-.093	-.207		-.255	-.300	-.378				19
20	.355	.209	-.008	-.153		-.226	-.290	-.382				20
21	.401	.306	.080	-.082		-.164	-.266	-.376				21
22	.372	.261	.088	-.035		-.112	-.224	-.355				22
					α=-12		δ= 0.0					
1	.725	.697	.736	.623		-.003	.450	-.245				1
2	.409	.490	.517	.528		.721	.809	.572				2
3	.360	.410	.444	.498		.709	.787	.477				3
4	.345	.354	.401	.633		.693	.769	.384				4
5	.330	.329	.347	.643		.706	.771	.320				5
6	.299	.310	.421	.659		.722	.768	.319				6
7	.292	.292	.672	.672		.745	.788	.324				7
8	.290	.314	.736	.715		.781	.810	.344				8
9	.289	.696	.747	.766		.828	.844	.329				9
10	.336	.741		.798		.868	.863	.327				10
11	.635	.725		.820		.882						11
12	.709	.552		.829		.881	.862	.208				12
13	.891	.844	.732	.853		.902	.867	.170				13
14	-.345	-.247	-.263	-.268		-.299	-.340	-.439				14
15	.152	-.221	-.253	-.274		-.298	-.341	-.406				15
16	.678	-.197	-.248	-.284		-.303	-.346	-.243				16
17		-.118	-.174	-.223		-.294	-.257	-.400				17
18		-.097	-.176	-.263		-.305	-.339	-.389				18
19	.360	.042	-.080	-.231		-.300	-.342	-.389				19
20	.262	.146	.003	-.172		-.264	-.328	-.389				20
21	.285	.200	.067	-.109		-.210	-.304	-.377				21
22	.249	.138	.035	-.090		-.172	-.267	-.350				22
					α= 9		δ= 0.0					
1	.783	.718	.771	.688		.279	.626	-.082				1
2	.386	.412	.454	.467		.611	.730	.522				2
3	.289	.334	.359	.389		.581	.719	.438				3
4	.274	.281	.323	.365		.589	.712	.348				4
5	.262	.256	.278	.550		.606	.721	.291				5
6	.233	.241	.280	.590		.646	.729	.295				6
7	.229	.231	.594	.613		.679	.757	.307				7
8	.221	.207	.659	.647		.735	.794	.333				8
9	.224	.611	.663	.690		.785	.827	.318				9
10	.236	.650		.717		.820	.842	.314				10
11	.542	.613		.736		.832						11
12	.620	.461		.744		.829	.832	.195				12
13	.773	.799	.632	.787		.871	.844	.172				13
14	-.373	-.284	-.294	-.288		-.311	-.370	-.415				14
15	.089	-.241	-.271	-.298		-.321	-.358	-.393				15
16	.616	-.207	-.252	-.307		-.328	-.362	-.240				16
17		-.139	-.182	-.228		-.309	-.264	-.381				17
18		-.121	-.174	-.275		-.323	-.356	-.377				18
19	.246	.005	-.076	-.234		-.310	-.356	-.375				19
20	.195	.095	-.007	-.175		-.265	-.336	-.375				20
21	.203	.145	.042	-.120		-.218	-.313	-.363				21
22	.173	.087	.004	-.112		-.186	-.284	-.338				22

Table 18 Continued

Pressure coefficients on swept wing

Configuration 21 M= 1.61 R= 3.6 x 10^6

Orif	Station 1	2	3	4	24	5	6	7	8	9	10	Orif
					α= − 6		δ= 0.0					
1	.822	.710	.762	.722		.551	.767	.359				1
2	.243	.316	.341	.370		.377	.554	.390				2
3	.204	.215	.240	.262		.271	.565	.366				3
4	.189	.182	.209	.226		.436	.597	.298				4
5	.180	.162	.172	.240		.484	.628	.246				5
6	.150	.150	.165	.459		.542	.663	.268				6
7	.148	.144	.465	.518		.604	.705	.291				7
8	.138	.125	.541	.555		.658	.751	.322				8
9	.142	.496	.540	.583		.701	.780	.308				9
10	.148	.532		.601		.717	.782	.297				10
11	.426	.472		.617		.729						11
12	.490	.354		.623		.726	.765	.185				12
13	.613	.698	.517	.688		.799	.798	.182				13
14	−.395	−.322	−.324	−.314		−.325	−.370	−.370				14
15	−.027	−.256	−.286	−.320		−.342	−.368	−.357				15
16	.454	−.211	−.254	−.327		−.349	−.367	−.218				16
17		−.149	−.187	−.218		−.300	−.252	−.333				17
18		−.145	−.184	−.287		−.337	−.359	−.349				18
19	.153	−.038	−.104	−.236		−.310	−.358	−.341				19
20	.123	.035	−.053	−.179		−.264	−.331	−.334				20
21	.099	.075	−.019	−.138		−.220	−.311	−.323				21
22	.090	.028	−.040	−.140		−.199	−.284	−.303				22
					α= − 3		δ= 0.0					
1	.837	.703	.754	.732		.690	.739	.860				1
2	.164	.187	.223	.248		.265	.255	.277				2
3	.128	.109	.100	.127		.120	.219	.271				3
4	.112	.089	.110	.122		.142	.438	.227				4
5	.104	.075	.075	.103		.303	.517	.213				5
6	.077	.066	.069	.331		.440	.577	.262				6
7	.072	.065	.357	.414		.508	.626	.291				7
8	.070	.047	.430	.447		.549	.656	.313				8
9	.060	.393	.420	.463		.570	.673	.284				9
10	.066	.428		.474		.586	.679	.269				10
11	.324	.348		.485		.602						11
12	.414	.251		.488		.593	.653	.182				12
13	.548	.593	.406	.564		.674	.783	.187				13
14	−.427	−.363	−.348	−.341		−.335	−.370	−.347				14
15	−.165	−.269	−.305	−.343		−.355	−.367	−.344				15
16	.066	−.218	−.270	−.338		−.363	−.365	−.207				16
17		−.137	−.180	−.197		−.257	−.221	−.299				17
18		−.181	−.218	−.306		−.343	−.364	−.346				18
19	.057	−.083	−.153	−.251		−.311	−.349	−.330				19
20	.052	−.022	−.116	−.200		−.269	−.324	−.318				20
21	.037	.003	−.081	−.168		−.229	−.309	−.308				21
22	.022	−.025	−.093	−.168		−.215	−.286	−.281				22
					α= 0		δ= 0.0					
1	.872	.824	.746	.707		.739	.644	.882				1
2	.119	.102	.129	.153		.181	.178	.105				2
3	.065	.045	.057	.086		.078	.086	.260				3
4	.063	.027	.033	.040		.036	.091	.274				4
5	.058	.016	.009	.024		.073	.411	.255				5
6	.027	.012	.007	.227		.367	.475	.286				6
7	.025	.012	.277	.331		.418	.504	.299				7
8	.019	−.001	.352	.356		.436	.526	.318				8
9	.019	.328	.339	.366		.447	.537	.302				9
10	.014	.355		.375		.460	.548	.287				10
11	.237	.268		.382		.470						11
12	.348	.189		.382		.461	.533	.198				12
13	.494	.507	.331	.463		.545	.714	.200				13
14	−.429	−.355	−.333	−.314		−.298	−.330	−.323				14
15	−.225	−.267	−.298	−.316		−.331	−.337	−.319				15
16	.251	−.220	−.266	−.324		−.341	−.335	−.193				16
17		−.153	−.196	−.199		−.284	−.235	−.313				17
18		−.177	−.220	−.279		−.315	−.332	−.314				18
19	.048	−.093	−.160	−.223		−.272	−.313	−.292				19
20	.044	−.036	−.120	−.178		−.217	−.279	−.279				20
21	.012	−.007	−.092	−.145		−.189	−.262	−.261				21
22	.014	−.026	−.095	−.155		−.186	−.246	−.234				22

Table 18 Continued

Pressure coefficients on swept wing

Configuration 21 M= 1.61 R= 3.6 x 10^6

Orif	Station 1	2	3	4	24	5	6	7	8	9	10	Orif
					α= 3		δ= 0.0					
1	.896	.811	.723	.643		.753	.450	.873				1
2	.056	-.031	-.042	-.048		-.046	-.048	-.022				2
3	-.013	-.034	-.043	-.035		-.038	-.039	.141				3
4	-.001	-.043	-.061	-.068		-.061	-.033	.242				4
5	-.004	-.057	-.066	-.069		-.049	.272	.233				5
6	-.027	-.052	-.074	.171		.227	.308	.220				6
7	-.028	-.048	.220	.212		.269	.317	.212				7
8	-.044	-.062	.243	.227		.283	.327	.209				8
9	-.039	.252	.223	.233		.286	.334	.197				9
10	-.046	.275		.240		.295	.328	.183				10
11	.092	.164		.241		.292						11
12	.279	.110		.240		.284	.319	.159				12
13	.409	.427	.221	.317		.379	.415	.338				13
14	-.440	-.369	-.350	-.336		-.309	-.340	-.249				14
15	-.168	-.280	-.318	-.334		-.344	-.338	-.319				15
16	-.012	-.235	-.290	-.333		-.350	-.341	-.191				16
17		-.147	-.187	-.184		-.267	-.226	-.291				17
18		-.205	-.257	-.295		-.319	-.332	-.303				18
19	-.008	-.134	-.201	-.250		-.277	-.309	-.284				19
20	.024	-.087	-.168	-.215		-.241	-.272	-.267				20
21	-.020	-.060	-.141	-.187		-.214	-.255	-.253				21
22	-.051	-.072	-.138	-.195		-.214	-.244	-.229				22
					α= 6		δ= 0.0					
1	.900	.619	.615	.542		.767	.282	.961				1
2	.010	-.133	-.144	-.158		-.158	-.164	-.130				2
3	-.077	-.130	-.143	-.145		-.143	-.153	-.066				3
4	-.051	-.113	-.161	-.162		-.159	-.153	.128				4
5	-.058	-.117	-.171	-.142		-.123	.072	.155				5
6	-.076	-.111	-.165	.090		.105	.154	.176				6
7	-.075	-.105	.123	.117		.132	.168	.171				7
8	-.099	-.116	.140	.115		.143	.176	.167				8
9	-.090	.167	.124	.109		.150	.177	.154				9
10	-.092	.196		.104		.156	.172	.134				10
11	-.007	.100		.095		.157						11
12	.213	.049		.077		.151	.165	.105				12
13	.330	.363	.140	.156		.225	.260	.097				13
14	-.445	-.383	-.364	-.348		-.316	-.340	-.219				14
15	-.151	-.303	-.331	-.344		-.350	-.339	-.324				15
16	-.107	-.260	-.306	-.340		-.351	-.338	-.193				16
17		-.138	-.164	-.163		-.237	-.203	-.290				17
18		-.228	-.274	-.304		-.325	-.330	-.323				18
19	-.032	-.169	-.227	-.266		-.295	-.307	-.286				19
20	-.021	-.127	-.193	-.237		-.263	-.273	-.268				20
21	-.065	-.103	-.168	-.214		-.245	-.255	-.264				21
22	-.085	-.111	-.161	-.218		-.235	-.239	-.259				22
					α= 9		δ= 0.0					
1	.939	.430	.453	.382		.744	.151	1.015				1
2	-.035	-.207	-.222	-.239		-.245	-.255	-.242				2
3	-.130	-.209	-.221	-.228		-.228	-.237	-.222				3
4	-.091	-.198	-.233	-.235		-.239	-.241	-.145				4
5	-.094	-.167	-.244	-.168		-.199	-.145	-.085				5
6	-.116	-.161	-.242	-.027		-.077	.024	-.027				6
7	-.117	-.148	.028	.020		.039	.053	.009				7
8	-.138	-.157	.024	.018		.052	.063	.031				8
9	-.129	.090	-.010	.006		.054	.063	.044				9
10	-.129	.141		.003		.061	.060	.044				10
11	-.082	.051		-.006		.065						11
12	.153	-.007		-.027		.059	.063	.018				12
13	.296	.288	.062	.041		.132	.158	.011				13
14	-.440	-.397	-.388	-.373		-.328	-.340	-.197				14
15	-.185	-.325	-.356	-.372		-.367	-.349	-.332				15
16	-.149	-.283	-.329	-.364		-.363	-.349	-.197				16
17		-.121	-.140	-.142		-.205	-.182	-.285				17
18		-.252	-.294	-.335		-.345	-.340	-.343				18
19	-.060	-.200	-.247	-.304		-.320	-.318	-.307				19
20	-.067	-.166	-.215	-.283		-.291	-.287	-.301				20
21	-.105	-.144	-.194	-.263		-.274	-.272	-.309				21
22	-.124	-.146	-.188	-.263		-.249	-.250	-.293				22

Table 18 Concluded

Pressure coefficients on swept wing

Configuration 21 M = 1.61 R = 3.6 x 10^6

Orif	Station 1	2	3	4	24	5	6	7	8	9	10	Orif
					α = 12		δ = 0.0					
1	.978	.228	.195	.179		.637	-.003	.876				1
2	-.087	-.284	-.299	-.324		-.328	-.347	-.264				2
3	-.167	-.280	-.298	-.311		-.313	-.329	-.245				3
4	-.133	-.280	-.303	-.309		-.314	-.319	-.196				4
5	-.138	-.263	-.310	-.255		-.287	-.286	-.168				5
6	-.159	-.218	-.307	-.171		-.195	-.120	-.135				6
7	-.158	-.201	-.060	-.112		-.127	-.066	-.105				7
8	-.173	-.205	-.075	-.082		-.070	-.038	-.089				8
9	-.173	-.041	-.110	-.085		-.052	-.030	-.083				9
10	-.172	.087		-.089		-.039	-.031	-.080				10
11	-.143	.019		-.105		-.030						11
12	.092	-.057		-.120		-.034	-.028	-.113				12
13	.235	.227	-.056	-.058		.036	.052	-.147				13
14	-.446	-.409	-.409	-.382		-.333	-.340	-.234				14
15	-.226	-.338	-.373	-.378		-.361	-.338	-.309				15
16	-.182	-.297	-.341	-.374		-.361	-.338	-.183				16
17		-.067	-.079	-.085		-.145	-.134	-.250				17
18		-.272	-.311	-.357		-.343	-.326	-.319				18
19	-.100	-.224	-.266	-.331		-.325	-.315	-.299				19
20	-.109	-.199	-.241	-.313		-.299	-.296	-.297				20
21	-.140	-.178	-.220	-.297		-.280	-.283	-.291				21
22	-.153	-.176	-.204	-.270		-.250	-.260	-.277				22
					α = 15		δ = 0.0					
1	1.010	.095	-.022	-.017		.438	-.183	.723				1
2	-.121	-.341	-.358	-.392		-.397	-.410	-.299				2
3	-.193	-.331	-.351	-.376		-.379	-.401	-.292				3
4	-.167	-.330	-.353	-.367		-.372	-.386	-.273				4
5	-.168	-.328	-.357	-.328		-.354	-.372	-.261				5
6	-.185	-.282	-.349	-.232		-.255	-.316	-.247				6
7	-.187	-.241	-.159	-.153		-.146	-.235	-.224				7
8	-.200	-.236	-.125	-.124		-.109	-.160	-.213				8
9	-.203	-.167	-.160	-.137		-.096	-.136	-.206				9
10	-.203	.056		-.141		-.092	-.120	-.199				10
11	-.180	.012		-.153		-.086						11
12	.050	-.083		-.175		-.088	-.073	-.228				12
13	.199	.157	-.146	-.123		-.022	.151	-.288				13
14	-.453	-.424	-.430	-.397		-.348	-.350	-.315				14
15	-.241	-.352	-.399	-.393		-.384	-.363	-.339				15
16	-.159	-.309	-.369	-.390		-.380	-.359	-.209				16
17		.084	.095	.086		.092	.095	-.135				17
18		-.294	-.348	-.381		-.378	-.346	-.347				18
19	-.137	-.255	-.320	-.359		-.358	-.337	-.335				19
20	-.151	-.230	-.297	-.342		-.334	-.319	-.336				20
21	-.167	-.213	-.276	-.320		-.314	-.305	-.331				21
22	-.188	-.206	-.254	-.281		-.280	-.280	-.317				22
					α =		δ =					

Table 19

Pressure coefficients on swept wing

Configuration 21 M = 1.61 R = 3.6 x 10^6

Orif	Station 1	2	3	4	24	5	6	7	8	9	10	Orif
						α = −15 δ = 0.0						
1	.568	.642	.602	.724		−.313	.027	−.414				1
2	.466	.596	.657	.813		.870	.881	.594				2
3	.462	.537	.603	.787		.850	.871	.538				3
4	.445	.478	.558	.786		.826	.843	.431				4
5	.426	.465	.707	.782		.820	.832	.355				5
6	.406	.461	.750	.783		.820	.821	.347				6
7	.420	.429	.777	.793		.825	.829	.343				7
8	.443	.718	.815	.817		.841	.841	.348				8
9	.437	.866	.853	.858		.867	.856	.327				9
10	.610	.926		.901		.900	.876	.328				10
11	.836	.930		.928		.926						11
12	.949	.780		.938		.927	.877	.202				12
13	1.103	.899	.902	.946		.931	.878					13
14	−.345	−.202	−.184	−.188		−.254	−.280					14
15	.242	−.206	−.187	−.201		−.236	−.292					15
16	.548	−.212	−.208	−.221		−.249	−.302					16
17		−.106	−.163	−.197		−.261	−.253					17
18		−.093	−.171	−.224		−.258	−.296					18
19	.334	.064	−.102	−.214		−.259	−.305					19
20	.375	.216	−.013	−.156		−.222	−.289					20
21	.427	.321	.077	−.078		−.161	−.264					21
22	.390	.264	.092	−.030		−.099	−.217					22
						α = −12 δ = 0.0						
1	.709	.671	.703	.673		−.044	.410	−.291				1
2	.424	.484	.513	.525		.723	.799	.517				2
3	.348	.404	.437	.503		.705	.787	.478				3
4	.343	.344	.396	.645		.686	.761	.377				4
5	.320	.324	.350	.640		.696	.760	.313				5
6	.292	.303	.455	.647		.710	.759	.314				6
7	.286	.283	.672	.667		.732	.786	.318				7
8	.284	.333	.731	.706		.769	.809	.334				8
9	.280	.692	.739	.757		.815	.840	.321				9
10	.324	.732		.794		.855	.864	.314				10
11	.633	.714		.814		.871						11
12	.710	.548		.826		.870	.846	.191				12
13	.872	.833	.714	.849		.888	.858					13
14	−.369	−.258	−.263	−.266		−.308	−.340					14
15	.126	−.224	−.261	−.279		−.305	−.346					15
16	.478	−.197	−.261	−.295		−.314	−.348					16
17		−.118	−.177	−.248		−.301	−.282					17
18		−.095	−.180	−.273		−.315	−.337					18
19	.275	.050	−.084	−.235		−.311	−.345					19
20	.274	.158	.006	−.173		−.263	−.333					20
21	.316	.219	.073	−.108		−.202	−.307					21
22	.259	.142	.038	−.086		−.156	−.267					22
						α = −9 δ = 0.0						
1	.773	.681	.746	.662		.291	.642	−.115				1
2	.510	.394	.433	.453		.591	.702	.450				2
3	.276	.307	.340	.350		.565	.700	.418				3
4	.264	.263	.309	.347		.566	.687	.341				4
5	.244	.241	.268	.524		.582	.700	.276				5
6	.218	.225	.263	.566		.623	.709	.281				6
7	.210	.207	.574	.592		.660	.744	.295				7
8	.207	.187	.640	.632		.714	.782	.317				8
9	.205	.592	.640	.673		.769	.816	.305				9
10	.219	.629		.698		.801	.829	.299				10
11	.521	.580		.717		.812						11
12	.600	.437		.727		.811	.803	.177				12
13	.739	.772	.602	.767		.851	.829					13
14	−.385	−.299	−.300	−.298		−.332	−.370					14
15	.021	−.247	−.284	−.307		−.335	−.370					15
16	.392	−.208	−.269	−.318		−.344	−.372					16
17		−.139	−.188	−.263		−.325	−.291					17
18		−.122	−.186	−.289		−.342	−.362					18
19	.228	.010	−.086	−.242		−.327	−.365					19
20	.200	.101	−.011	−.178		−.274	−.347					20
21	.228	.147	.039	−.123		−.221	−.323					21
22	.172	.085	.003	−.110		−.178	−.294					22

Table 19 Continued

Pressure coefficients on swept wing

Configuration 21 M= 1.61 R= 3.6 x 10^6

Orif	Station 1	2	3	4	24	5	6	7	8	9	10	Orif
					α= - 6		δ= 0.0					
1	.804	.690	.744	.683		.510	.717	.259				1
2	.243	.323	.348	.374		.366	.569	.395				2
3	.200	.216	.241	.245		.348	.571	.348				3
4	.194	.184	.216	.231		.461	.600	.295				4
5	.177	.163	.181	.272		.486	.623	.245				5
6	.152	.150	.165	.465		.533	.652	.259				6
7	.146	.142	.475	.513		.595	.702	.278				7
8	.138	.120	.541	.555		.655	.750	.309				8
9	.137	.500	.540	.583		.705	.782	.294				9
10	.144	.533		.602		.725	.789	.280				10
11	.423	.462		.617		.735						11
12	.498	.352		.629		.736	.755	.161				12
13	.608	.686	.507	.682		.804	.806					13
14	-.396	-.332	-.326	-.320		-.351	-.370					14
15	-.070	-.262	-.296	-.328		-.355	-.378					15
16	.310	-.215	-.274	-.337		-.363	-.380					16
17		-.156	-.197	-.268		-.329	-.293					17
18		-.146	-.192	-.297		-.349	-.373					18
19	.160	-.028	-.106	-.241		-.321	-.369					19
20	.134	.046	-.049	-.182		-.273	-.348					20
21	.162	.087	-.011	-.134		-.227	-.326					21
22	.107	.035	-.035	-.137		-.201	-.296					22
					α= - 3		δ= 0.0					
1	.833	.729	.734	.679		.684	.711	.838				1
2	.155	.181	.220	.241		.222	.252	.304				2
3	.117	.097	.087	.104		.143	.199	.262				3
4	.108	.083	.101	.115		.136	.403	.239				4
5	.094	.067	.074	.089		.227	.477	.224				5
6	.069	.061	.061	.318		.420	.550	.268				6
7	.064	.054	.346	.402		.503	.617	.297				7
8	.057	.035	.418	.434		.554	.665	.309				8
9	.050	.378	.410	.450		.574	.690	.277				9
10	.063	.416		.464		.588	.697	.273				10
11	.302	.340		.474		.597						11
12	.399	.244		.479		.590	.664	.149				12
13	.513	.583	.388	.554		.666	.833					13
14	-.423	-.372	-.355	-.343		-.360	-.350					14
15	-.180	-.280	-.317	-.346		-.362	-.374					15
16	.019	-.226	-.284	-.350		-.373	-.373					16
17		-.157	-.203	-.254		-.287	-.259					17
18		-.176	-.220	-.312		-.345	-.369					18
19	.090	-.081	-.152	-.249		-.302	-.361					19
20	.060	-.025	-.117	-.193		-.249	-.344					20
21	.058	.005	-.082	-.161		-.215	-.329					21
22	.022	-.026	-.091	-.167		-.211	-.305					22
					α= 0		δ= 0.0					
1	.855	.799	.722	.616		.720	.649	.857				1
2	.115	.100	.131	.166		.151	.167	.124				2
3	.064	.035	.044	.071		.079	.079	.305				3
4	.059	.024	.027	.035		.048	.053	.302				4
5	.045	.011	.010	.015		.055	.353	.246				5
6	.024	.006	.003	.228		.346	.462	.274				6
7	.021	.004	.274	.326		.408	.518	.304				7
8	.017	-.013	.346	.350		.449	.555	.318				8
9	.007	.318	.335	.367		.472	.574	.318				9
10	.009	.347		.375		.483	.586	.282				10
11	.229	.261		.384		.491						11
12	.343	.184		.386		.483	.576	.174				12
13	.460	.497	.319	.464		.549	.789					13
14	-.428	-.371	-.343	-.324		-.340	-.350					14
15	-.260	-.280	-.310	-.330		-.362	-.352					15
16	-.007	-.229	-.285	-.335		-.380	-.354					16
17		-.171	-.214	-.256		-.311	-.275					17
18		-.183	-.231	-.289		-.330	-.349					18
19	.064	-.097	-.171	-.235		-.262	-.337					19
20	.028	-.049	-.134	-.190		-.213	-.312					20
21	.031	-.019	-.099	-.157		-.179	-.297					21
22	.003	-.038	-.104	-.168		-.169	-.274					22

Table19 Continued

Pressure coefficients on swept wing

Configuration21 M=1.61 R=3.6 x 10^6

Orif	Station 1	2	3	4	24	5	6	7	8	9	10	Orif
					α= 3		δ= 0.0					
1	.879	.830	.720	.392		.742	.455	.862				1
2	.042	-.049	-.056	-.060		-.067	-.060	.012				2
3	-.030	-.050	-.060	-.045		-.059	-.050	.230				3
4	-.010	-.058	-.078	-.082		-.075	-.074	.297				4
5	-.021	-.070	-.075	-.089		-.080	.127	.242				5
6	-.040	-.068	-.087	.156		.183	.277	.250				6
7	-.046	-.067	.204	.199		.242	.313	.239				7
8	-.051	-.078	.232	.212		.294	.334	.195				8
9	-.059	.237	.210	.220		.321	.349	.135				9
10	-.059	.253		.228		.333	.339	.110				10
11	.062	.146		.236		.340						11
12	.266	.096		.234		.340	.399	.095				12
13	.373	.402	.202	.308		.399	.564					13
14	-.444	-.390	-.363	-.345		-.357	-.350					14
15	-.178	-.296	-.333	-.347		-.385	-.355					15
16	-.078	-.248	-.303	-.350		-.402	-.359					16
17		-.167	-.211	-.243		-.291	-.262					17
18		-.212	-.270	-.310		-.351	-.349					18
19	-.024	-.149	-.218	-.259		-.304	-.326					19
20	-.005	-.106	-.184	-.224		-.272	-.290					20
21	-.023	-.080	-.155	-.200		-.241	-.271					21
22	-.070	-.092	-.154	-.206		-.222	-.254					22
					α= 6		δ= 0.0					
1	.891	.725	.626	.215		.755	.291	.910				1
2	.002	-.135	-.148	-.161		-.163	-.163	-.060				2
3	-.087	-.134	-.146	-.142		-.153	-.151	.122				3
4	-.053	-.117	-.165	-.162		-.163	-.165	.171				4
5	-.065	-.123	-.172	-.156		-.160	-.099	.221				5
6	-.081	-.120	-.168	.080		.064	.145	.207				6
7	-.083	-.112	.118	.096		.126	.177	.162				7
8	-.097	-.123	.139	.100		.167	.195	.115				8
9	-.098	.159	.117	.103		.199	.199	.081				9
10	-.099	.189		.104		.213	.158	.057				10
11	-.047	.087		.098		.221						11
12	.206	.042		.085		.226	.199	.043				12
13	.323	.337	.125	.167		.235	.341					13
14	-.452	-.401	-.376	-.363		-.368	-.350					14
15	-.164	-.315	-.347	-.359		-.395	-.363					15
16	-.125	-.267	-.319	-.358		-.404	-.366					16
17		-.159	-.195	-.225		-.269	-.246					17
18		-.237	-.289	-.318		-.371	-.347					18
19	-.058	-.179	-.244	-.276		-.343	-.320					19
20	-.046	-.141	-.213	-.244		-.308	-.279					20
21	-.073	-.116	-.184	-.223		-.287	-.264					21
22	-.105	-.127	-.177	-.231		-.257	-.250					22
					α= 9		δ= 0.0					
1	.923	.479	.453	.022		.737	.160	1.002				1
2	-.039	-.208	-.221	-.237		-.246	-.254	-.197				2
3	-.135	-.207	-.221	-.224		-.233	-.235	-.047				3
4	-.095	-.197	-.235	-.234		-.235	-.241	.005				4
5	-.104	-.168	-.241	-.213		-.229	-.224	.018				5
6	-.120	-.167	-.242	-.002		-.098	.025	.029				6
7	-.121	-.158	.023	.002		.038	.064	.048				7
8	-.135	-.163	.025	.000		.068	.078	.053				8
9	-.136	.084	-.006	-.001		.097	.072	.050				9
10	-.136	.133		.002		.118	.018	.037				10
11	-.108	.048		-.005		.123						11
12	.148	-.007		-.018		.116	.046	.008				12
13	.272	.265	.054	.051		.120	.165					13
14	-.456	-.409	-.390	-.378		-.378	-.360					14
15	-.190	-.330	-.363	-.378		-.398	-.372					15
16	-.151	-.281	-.337	-.375		-.402	-.371					16
17		-.136	-.171	-.194		-.234	-.223					17
18		-.258	-.306	-.340		-.383	-.354					18
19	-.086	-.207	-.262	-.305		-.364	-.319					19
20	-.086	-.176	-.228	-.282		-.341	-.286					20
21	-.114	-.155	-.203	-.262		-.320	-.275					21
22	-.138	-.156	-.197	-.264		-.285	-.264					22

Table19 Concluded

Pressure coefficients on swept wing

Configuration21 M= 1.61 R=3.6 x 10^6

Orif	Station 1	2	3	4	24	5	6	7	8	9	10	Orif
					α= 12		δ= 0.0					
1	.964	.239	.181	-.204		.631	-.007	.858				1
2	-.093	-.295	-.310	-.339		-.344	-.364	-.229				2
3	-.182	-.291	-.308	-.318		-.328	-.342	-.183				3
4	-.140	-.293	-.314	-.319		-.326	-.333	-.141				4
5	-.153	-.274	-.318	-.263		-.314	-.325	-.125				5
6	-.168	-.229	-.318	-.091		-.235	-.127	-.110				6
7	-.170	-.213	-.071	-.100		-.175	-.081	-.093				7
8	-.180	-.218	-.082	-.111		-.070	-.064	-.082				8
9	-.182	-.058	-.121	-.112		-.047	-.062	-.080				9
10	-.186	.073		-.112		-.024	-.098	-.087				10
11	-.166	.007		-.123		-.006						11
12	.090	-.064		-.140		.001	-.094	-.120				12
13	.193	.206	-.078	-.076		.081	.004					13
14	-.457	-.430	-.419	-.389		-.376	-.370					14
15	-.238	-.348	-.384	-.389		-.385	-.366					15
16	-.185	-.298	-.355	-.386		-.389	-.366					16
17		-.075	-.103	-.121		-.161	-.164					17
18		-.286	-.326	-.364		-.357	-.358					18
19	-.131	-.241	-.287	-.341		-.347	-.336					19
20	-.131	-.218	-.261	-.324		-.323	-.314					20
21	-.157	-.199	-.237	-.308		-.305	-.299					21
22	-.180	-.198	-.222	-.280		-.271	-.275					22
					α= 15		δ= 0.0					
1	.991	.096	-.047	-.338		.422	-.193	.689				1
2	-.129	-.356	-.372	-.402		-.406	-.417	-.301				2
3	-.211	-.346	-.365	-.385		-.390	-.407	-.285				3
4	-.180	-.346	-.367	-.377		-.381	-.395	-.265				4
5	-.189	-.341	-.364	-.336		-.343	-.389	-.261				5
6	-.202	-.296	-.359	-.173		-.226	-.329	-.251				6
7	-.204	-.260	-.162	-.169		-.149	-.268	-.227				7
8	-.215	-.257	-.155	-.175		-.108	-.164	-.218				8
9	-.216	-.195	-.187	-.177		-.097	-.130	-.207				9
10	-.218	.029		-.177		-.093	-.120	-.202				10
11	-.198	-.007		-.189		-.083						11
12	.036	-.092		-.204		-.073	-.123	-.235				12
13	.149	.149	-.180	-.145		-.037	-.024					13
14	-.466	-.441	-.438	-.401		-.380	-.360					14
15	-.258	-.360	-.408	-.396		-.390	-.372					15
16	-.184	-.310	-.387	-.392		-.389	-.370					16
17		.046	.037	.077		.117	.135					17
18		-.304	-.367	-.385		-.375	-.369					18
19	-.165	-.269	-.336	-.363		-.365	-.356					19
20	-.166	-.247	-.310	-.347		-.345	-.333					20
21	-.182	-.229	-.291	-.333		-.325	-.321					21
22	-.212	-.224	-.268	-.296		-.299	-.300					22
					α=		δ=					

Table 20

Pressure coefficients on swept wing

Configuration 22 M= 1.61 R=3.6 x 10^6

Orif	Station 1	2	3	4	24	5	6	7	8	9	10	Orif
					α=-15		δ= 0.0					
1	.609	.665	.637	.715		-.296	.152	-.336				1
2	.457	.572	.627	.776		.840	.796	.468				2
3	.445	.495	.577	.754		.810	.753	.406				3
4	.430	.444	.529	.753		.777	.696	.301				4
5	.402	.435	.655	.752		.758	.650	.217				5
6	.379	.436	.729	.757		.737	.590	.176				6
7	.388	.409	.758	.763		.706	.553	.148				7
8	.408	.679	.799	.785		.669	.524	.125				8
9	.409	.849	.833	.817		.605	.493	.093				9
10	.573	.902		.850		.528	.444	.069				10
11	.807	.898		.863		.430						11
12	.911	.741		.846		.331	.390	-.013				12
13	1.075	.889	.868	.811		.246	.364					13
14	-.341	-.190	-.148	-.112		.209	.337					14
15	.224	-.190	-.151	-.098		.139	.238					15
16	.570	-.197	-.160	-.093		-.029	-.204					16
17		-.085	-.130	-.107		-.177	-.167					17
18		-.081	-.140	-.085		.152	.347					18
19	.344	.066	-.097	-.075		.232	.332					19
20	.366	.202	-.029	-.068		.208	.302					20
21	.416	.297	.042	-.064		.188	.275					21
22	.375	.243	.034	-.105		.156	.227					22
					α=-12		δ= 0.0					
1	.704	.688	.710	.665		-.092	.420	-.142				1
2	.427	.500	.526	.539		.738	.731	.404				2
3	.365	.414	.452	.560		.709	.693	.343				3
4	.359	.358	.409	.655		.680	.630	.245				4
5	.334	.336	.367	.651		.670	.585	.161				5
6	.306	.317	.497	.659		.660	.534	.121				6
7	.300	.295	.683	.668		.635	.490	.090				7
8	.296	.372	.741	.699		.610	.464	.071				8
9	.292	.713	.752	.740		.556	.431	.043				9
10	.351	.755		.767		.487	.385	.021				10
11	.656	.739		.770		.397						11
12	.731	.567		.753		.300	.322	-.050				12
13	.903	.839	.729	.739		.204	.289					13
14	-.362	-.235	-.216	-.173		.136	.254					14
15	.165	-.210	-.215	-.162		.058	.180					15
16	.536	-.186	-.221	-.161		-.090	-.188					16
17		-.105	-.157	-.152		-.182	-.166					17
18		-.085	-.170	-.146		.035	.214					18
19	.288	.057	-.101	-.119		.092	.204					19
20	.285	.160	-.028	-.106		.097	.194					20
21	.326	.223	.036	-.099		.087	.176					21
22	.269	.147	.008	-.135		.070	.161					22
					α= 9		δ= 0.0					
1	.777	.711	.752	.655		.288	.641	.136				1
2	.525	.408	.444	.458		.598	.641	.367				2
3	.286	.320	.350	.359		.563	.602	.268				3
4	.276	.275	.314	.352		.558	.555	.182				4
5	.253	.249	.276	.529		.556	.516	.115				5
6	.228	.234	.266	.572		.560	.481	.075				6
7	.225	.218	.574	.587		.557	.429	.048				7
8	.215	.197	.644	.618		.533	.409	.031				8
9	.216	.600	.644	.647		.496	.381	.005				9
10	.231	.641		.662		.441	.341	-.021				10
11	.536	.599		.664		.359						11
12	.610	.449		.649		.272	.281	-.089				12
13	.756	.778	.603	.658		.179	.234					13
14	-.386	-.289	-.261	-.218		.106	.206					14
15	.066	-.235	-.254	-.214		.020	.130					15
16	.451	-.197	-.244	-.215		-.115	-.182					16
17		-.132	-.176	-.175		-.164	-.164					17
18		-.117	-.187	-.187		-.010	.145					18
19	.222	.008	-.109	-.154		.007	.112					19
20	.194	.095	-.049	-.134		.008	.081					20
21	.225	.141	.002	-.120		.006	.051					21
22	.166	.080	-.035	-.160		-.007	.029					22

Table 20 Continued

Pressure coefficients on swept wing

Configuration 22 M=1.61 R=3.6 x 10^6

Orif	Station 1	2	3	4	24	5	6	7	8	9	10	Orif
					α= -6		δ= 0.0					
1	.807	.711	.749	.683		.533	.739	.542				1
2	.243	.317	.347	.376		.366	.519	.320				2
3	.202	.214	.238	.244		.318	.474	.191				3
4	.194	.182	.218	.227		.444	.446	.125				4
5	.175	.161	.178	.255		.454	.428	.066				5
6	.148	.149	.165	.458		.467	.404	.041				6
7	.146	.138	.463	.499		.479	.364	.017				7
8	.138	.118	.537	.532		.462	.354	.004				8
9	.137	.497	.533	.551		.433	.329	-.017				9
10	.145	.529		.557		.384	.292	-.038				10
11	.421	.467		.556		.312						11
12	.497	.356		.541		.236	.241	-.086				12
13	.612	.682	.502	.570		.157	.204					13
14	-.404	-.325	-.289	-.245		.089	.176					14
15	-.054	-.249	-.268	-.243		-.005	.106					15
16	.315	-.206	-.246	-.243		-.131	-.161					16
17		-.149	-.180	-.150		-.152	-.144					17
18		-.140	-.196	-.206		-.015	.112					18
19	.157	-.033	-.130	-.176		-.035	.077					19
20	.131	.039	-.081	-.151		-.044	.044					20
21	.149	.077	-.040	-.134		-.044	.012					21
22	.097	.033	-.066	-.167		-.054	-.014					22
					α= -3		δ= 0.0					
1	.839	.696	.735	.681		.692	.711	.830				1
2	.163	.191	.225	.246		.232	.259	.171				2
3	.121	.102	.091	.111		.155	.148	.054				3
4	.118	.087	.106	.126		.144	.246	.057				4
5	.098	.074	.080	.101		.179	.296	.044				5
6	.074	.063	.069	.314		.338	.288	.035				6
7	.074	.058	.358	.392		.362	.261	.027				7
8	.060	.041	.426	.413		.359	.258	.011				8
9	.057	.388	.413	.427		.332	.244	.007				9
10	.063	.416		.427		.286	.218	-.021				10
11	.309	.337		.424		.225						11
12	.417	.243		.404		.164	.185	-.042				12
13	.542	.574	.384	.464		.105	.161					13
14	-.418	-.362	-.319	-.275		.049	.134					14
15	-.217	-.263	-.287	-.275		-.034	.069					15
16	-.029	-.215	-.258	-.275		-.146	-.134					16
17		-.145	-.161	-.140		-.141	-.113					17
18		-.170	-.220	-.243		-.034	.068					18
19	.092	-.079	-.170	-.207		-.077	.031					19
20	.069	-.027	-.134	-.182		-.092	-.006					20
21	.061	.007	-.104	-.164		-.099	-.032					21
22	.028	-.027	-.116	-.187		-.107	-.060					22
					α= 0		δ= 0.0					
1	.863	.779	.731	.627		.726	.652	.861				1
2	.118	.104	.131	.165		.150	.181	.112				2
3	.065	.041	.052	.075		.084	.084	-.035				3
4	.066	.025	.035	.035		.051	.052	.006				4
5	.049	.017	.010	.019		.030	.043	.007				5
6	.028	.011	.008	.227		.217	.133	.007				6
7	.023	.008	.295	.316		.282	.169	.062				7
8	.020	-.007	.348	.333		.282	.178	.069				8
9	.018	.334	.335	.340		.254	.173	.075				9
10	.012	.350		.341		.211	.159	.047				10
11	.202	.247		.337		.157						11
12	.359	.179		.317		.105	.133	.051				12
13	.485	.491	.309	.385		.052	.110					13
14	-.418	-.361	-.321	-.283		.011	.091					14
15	-.284	-.265	-.290	-.279		-.064	.037					15
16	.069	-.218	-.265	-.279		-.148	-.099					16
17		-.145	-.146	-.138		-.134	-.087					17
18		-.177	-.233	-.247		-.052	.050					18
19	.067	-.098	-.182	-.215		-.086	.022					19
20	.035	-.050	-.153	-.185		-.101	-.009					20
21	.032	-.019	-.126	-.168		-.111	-.031					21
22	-.001	-.039	-.137	-.192		-.116	-.051					22

Table 20 Continued

Pressure coefficients on swept wing

Configuration 22 M = 1.61 R = 3.6 x 10^6

Orif	Station 1	2	3	4	24	5	6	7	8	9	10	Orif
					α = 3		δ = 0.0					
1	.889	.796	.728	.397		.752	.464	.865				1
2	.052	-.033	-.035	-.036		-.035	-.031	-.006				2
3	-.016	-.036	-.046	-.031		-.038	-.032	-.026				3
4	.001	-.049	-.065	-.065		-.057	-.052	-.057				4
5	-.012	-.059	-.063	-.071		-.066	-.063	-.049				5
6	-.029	-.057	-.076	.168		.080	-.066	-.063				6
7	-.032	-.056	.219	.204		.157	-.067	-.055				7
8	-.042	-.068	.238	.209		.154	.004	-.061				8
9	-.046	.244	.216	.208		.135	.040	-.060				9
10	-.048	.261		.206		.103	.045	-.075				10
11	.040	.152		.202		.057						11
12	.274	.107		.180		.009	.039	-.088				12
13	.387	.413	.204	.243		-.028	.024					13
14	-.429	-.375	-.335	-.291		-.064	.008					14
15	-.232	-.285	-.305	-.288		-.111	-.026					15
16	-.063	-.237	-.279	-.285		-.136	-.063					16
17		-.131	-.121	-.120		-.117	-.055					17
18		-.201	-.248	-.255		-.108	-.010					18
19	-.001	-.135	-.204	-.229		-.121	-.025					19
20	.007	-.093	-.177	-.203		-.132	-.036					20
21	-.012	-.068	-.154	-.190		-.141	-.048					21
22	-.053	-.078	-.159	-.207		-.153	-.058					22
					α = 6		δ = 0.0					
1	.899	.765	.638	.229		.765	.307	.906				1
2	.012	-.122	-.132	-.147		-.149	-.152	-.102				2
3	-.073	-.120	-.132	-.128		-.137	-.137	-.098				3
4	-.045	-.106	-.151	-.150		-.148	-.149	-.145				4
5	-.057	-.116	-.158	-.147		-.150	-.152	-.146				5
6	-.072	-.108	-.158	.092		-.009	-.162	-.147				6
7	-.077	-.104	.130	.105		.057	-.168	-.143				7
8	-.089	-.113	.148	.107		.049	-.149	-.165				8
9	-.089	.172	.127	.103		.040	-.111	-.190				9
10	-.091	.202		.095		.013	-.072	-.225				10
11	-.036	.101		.081		-.027						11
12	.216	.051		.052		-.068	-.054	-.239				12
13	.335	.347	.136	.117		-.102	-.063					13
14	-.442	-.393	-.359	-.317		-.129	-.076					14
15	-.193	-.305	-.331	-.307		-.136	-.080					15
16	-.109	-.254	-.307	-.302		-.125	-.056					16
17		-.119	-.107	-.104		-.111	-.051					17
18		-.226	-.273	-.275		-.195	-.092					18
19	-.047	-.169	-.234	-.249		-.182	-.094					19
20	-.036	-.131	-.208	-.232		-.185	-.092					20
21	-.063	-.108	-.182	-.220		-.190	-.098					21
22	-.101	-.115	-.183	-.232		-.200	-.101					22
					α = 9		δ = 0.0					
1	.936	.417	.429	-.004		.741	.144	1.007				1
2	-.044	-.218	-.232	-.254		-.260	-.268	-.253				2
3	-.140	-.217	-.229	-.232		-.246	-.249	-.253				3
4	-.095	-.210	-.240	-.245		-.250	-.255	-.259				4
5	-.106	-.173	-.248	-.215		-.245	-.250	-.324				5
6	-.122	-.171	-.249	-.011		-.155	-.257	-.343				6
7	-.123	-.162	.015	-.013		-.058	-.261	-.344				7
8	-.136	-.170	.013	-.019		-.043	-.260	-.354				8
9	-.136	.079	-.017	-.024		-.063	-.251	-.362				9
10	-.135	.133		-.031		-.080	-.223	-.359				10
11	-.109	.047		-.044		-.112						11
12	.145	-.011		-.072		-.147	-.170	-.361				12
13	.270	.267	.044	-.019		-.177	-.170					13
14	-.452	-.409	-.390	-.345		-.191	-.167					14
15	-.199	-.328	-.357	-.335		-.171	-.097					15
16	-.160	-.279	-.332	-.331		-.133	-.079					16
17		-.105	-.114	-.096		-.097	-.068					17
18		-.256	-.299	-.312		-.301	-.179					18
19	-.087	-.206	-.260	-.287		-.254	-.175					19
20	-.089	-.176	-.232	-.275		-.253	-.168					20
21	-.118	-.155	-.211	-.264		-.253	-.180					21
22	-.143	-.156	-.204	-.255		-.254	-.172					22

Table20 Concluded

Pressure coefficients on swept wing

Configuration22 M=1.61 R=3.6 x 10^6

Orif	Station 1	2	3	4	24	5	6	7	8	9	10	Orif
					α= 12		δ= 0.0					
1	.971	.243	.194	-.193		.643	.010	.870				1
2	-.081	-.285	-.299	-.330		-.331	-.349	-.372				2
3	-.174	-.279	-.297	-.309		-.316	-.328	-.369				3
4	-.132	-.282	-.303	-.309		-.315	-.320	-.374				4
5	-.146	-.262	-.309	-.253		-.308	-.316	-.410				5
6	-.160	-.222	-.305	-.086		-.251	-.321	-.417				6
7	-.161	-.204	-.063	-.092		-.205	-.319	-.412				7
8	-.171	-.209	-.077	-.104		-.142	-.317	-.415				8
9	-.173	-.044	-.116	-.112		-.140	-.316	-.417				9
10	-.176	.080		-.117		-.156	-.308	-.412				10
11	-.154	.015		-.134		-.180						11
12	.100	-.057		-.163		-.205	-.252	-.415				12
13	.202	.212	-.070	-.108		-.227	-.232					13
14	-.451	-.420	-.406	-.358		-.233	-.191					14
15	-.231	-.340	-.373	-.350		-.188	-.151					15
16	-.177	-.290	-.345	-.351		-.148	-.152					16
17		-.062	-.076	-.078		-.079	-.086					17
18		-.275	-.318	-.331		-.321	-.246					18
19	-.126	-.234	-.283	-.313		-.282	-.234					19
20	-.126	-.212	-.258	-.296		-.268	-.226					20
21	-.153	-.193	-.234	-.281		-.253	-.223					21
22	-.176	-.187	-.221	-.258		-.236	-.216					22
					α= 15		δ= 0.0					
1	.996	.097	-.030	-.330		.435	-.180	.710				1
2	-.121	-.345	-.360	-.394		-.396	-.412	-.436				2
3	-.202	-.335	-.355	-.374		-.381	-.396	-.431				3
4	-.170	-.334	-.356	-.367		-.372	-.384	-.432				4
5	-.182	-.328	-.361	-.330		-.350	-.378	-.457				5
6	-.192	-.285	-.353	-.169		-.259	-.383	-.457				6
7	-.195	-.251	-.154	-.162		-.201	-.381	-.453				7
8	-.204	-.246	-.148	-.169		-.188	-.374	-.452				8
9	-.207	-.190	-.175	-.176		-.200	-.370	-.454				9
10	-.210	.034		-.179		-.217	-.365	-.449				10
11	-.178	.006		-.195		-.242						11
12	.049	-.083		-.220		-.261	-.331	-.457				12
13	.153	.164	-.175	-.172		-.277	-.312					13
14	-.461	-.435	-.420	-.370		-.272	-.245					14
15	-.246	-.350	-.396	-.371		-.240	-.171					15
16	-.168	-.298	-.377	-.373		-.210	-.155					16
17		.054	.046	.091		.136	.155					17
18		-.293	-.361	-.355		-.372	-.309					18
19	-.155	-.258	-.333	-.339		-.314	-.289					19
20	-.155	-.237	-.309	-.323		-.297	-.272					20
21	-.174	-.218	-.289	-.307		-.273	-.274					21
22	-.202	-.212	-.269	-.281		-.246	-.272					22
					α=		δ=					

Table 21

Pressure coefficients on swept wing

Configuration 23 M=1.61 R=3.6 x 10^6

Orif	Station 1	2	3	4	24	5	6	7	8	9	10	Orif
					α=-15		δ= 0.0					
1	.576	.653	.611	.764		-.390	.163	-.304				1
2	.460	.583	.648	.933		.827	.673	.426				2
3	.452	.510	.592	.952		.740	.626	.383				3
4	.437	.465	.543	.987		.616	.566	.284				4
5	.413	.457	.747	1.035		.495	.516	.200				5
6	.396	.451	.851	1.118		.384	.482	.172				6
7	.407	.415	.932	1.158		.308	.451	.149				7
8	.425	.483	1.030	1.016		.254	.463	.131				8
9	.419	.808	1.126	.439		.245	.475	.098				9
10	.435	.919		-.235		.279	.469	.079				10
11	.704	1.002		-.213		.323						11
12	.846	1.067		-.116		.360	.465	-.003				12
13	.941	1.109	-.214	.017		.382	.439	-.029				13
14	1.011	1.094	-.201	.131		.379	.393	-.166				14
15	1.064	-.190	-.124	.169		.280	.274	-.225				15
16	1.090	-.274	-.082	.024		.099	.129	-.060				16
17		-.030	-.009	.078		.094	.127	-.183				17
18		-.197	-.046	.381		.254	.314	.057				18
19	.009	-.156	.036	.336		.441	.411	.043				19
20	-.229	-.028	.105	.345		.444	.395	.017				20
21	-.065	.065	.150	.351		.426	.376	-.004				21
22	.043	.063	.113	.303		.334	.290	-.020				22
					α=-12		δ= 0.0					
1	.715	.677	.712	.658		-.226	.432	-.003				1
2	.425	.479	.513	.521		.793	.606	.363				2
3	.347	.396	.431	.628		.704	.540	.254				3
4	.338	.336	.391	.839		.591	.464	.162				4
5	.313	.317	.347	.942		.473	.416	.104				5
6	.290	.298	.331	1.018		.354	.369	.064				6
7	.282	.278	.712	1.019		.256	.316	.036				7
8	.278	.257	.830	.839		.176	.302	.025				8
9	.273	.544	.890	.387		.150	.291	.007				9
10	.253	.714		-.270		.156	.281	.002				10
11	.373	.758		-.188		.184						11
12	.648	.782		-.052		.217	.302	-.044				12
13	.723	.808	-.266	.063		.231	.302	-.057				13
14	.769	.815	-.171	.126		.239	.300	-.169				14
15	.802	-.204	-.067	.130		.171	.218	-.238				15
16	.808	-.274	-.040	-.012		.030	.042	-.093				16
17		-.051	-.003	.030		.041	.036	-.236				17
18		-.190	-.005	.276		.141	.232	.002				18
19	-.079	-.086	.066	.256		.267	.283	-.027				19
20	-.200	.021	.104	.253		.305	.305	-.027				20
21	-.011	.070	.139	.259		.321	.307	-.034				21
22	.015	.028	.123	.225		.270	.252	-.026				22
					α=- 9		δ= 0.0					
1	.783	.696	.741	.646		.153	.626	.321				1
2	.447	.381	.423	.433		.682	.547	.322				2
3	.262	.297	.324	.324		.609	.467	.187				3
4	.253	.246	.294	.592		.532	.396	.104				4
5	.228	.224	.246	.791		.433	.353	.038				5
6	.206	.212	.226	.835		.323	.303	.004				6
7	.202	.197	.404	.818		.230	.224	-.021				7
8	.191	.172	.668	.705		.140	.205	-.035				8
9	.189	.161	.720	.316		.097	.189	-.048				9
10	.173	.567		-.276		.093	.189	-.074				10
11	.187	.622		-.155		.106						11
12	.440	.644		-.022		.134	.189	-.102				12
13	.582	.662	-.285	.067		.147	.190	-.130				13
14	.635	.663	-.162	.103		.154	.136	-.193				14
15	.657	-.182	-.064	.090		.103	.005	-.271				15
16	.665	-.281	-.041	-.031		-.014	.007	-.122				16
17		-.078	.000	-.003		.004	.150	-.264				17
18		-.202	-.011	.207		.100	.170	-.054				18
19	-.090	-.092	.036	.188		.173	.161	-.101				19
20	-.197	.001	.063	.174		.187	.153	-.116				20
21	-.015	.037	.088	.172		.190	.125	-.122				21
22	-.004	-.004	.070	.142		.149	.125	-.104				22

Table21 Continued

Pressure coefficients on swept wing

Configuration23 M= 1.61 R= 3.6 x 10^6

Orif	Station 1	2	3	4	24	5	6	7	8	9	10	Orif
					α= − 6		δ= 0.0					
1	.813	.693	.724	.687		.559	.715	.622				1
2	.222	.294	.322	.350		.544	.475	.262				2
3	.183	.191	.214	.220		.504	.387	.110				3
4	.178	.163	.196	.233		.440	.327	.049				4
5	.158	.142	.161	.652		.371	.286	−.002				5
6	.133	.134	.146	.681		.294	.245	−.030				6
7	.130	.122	.146	.648		.199	.192	−.050				7
8	.120	.104	.552	.573		.106	.159	−.067				8
9	.117	.088	.594	.222		.051	.139	−.080				9
10	.109	.431		−.277		.028	.116	−.101				10
11	.109	.513		−.138		.034						11
12	.261	.535		−.021		.053	.103	−.108				12
13	.436	.555	−.297	.046		.071	.096	−.134				13
14	.518	.554	−.164	.067		.085	.099	−.123				14
15	.548	−.174	−.081	.053		.041	.063	−.251				15
16	.555	−.298	−.058	−.034		−.045	−.020	−.112				16
17		−.100	−.006	−.020		−.021	−.020	−.218				17
18		−.227	−.037	.138		.061	.086	−.037				18
19	−.087	−.121	.005	.113		.091	.090	−.102				19
20	−.255	−.033	.025	.111		.101	.078	−.141				20
21	−.025	.000	.049	.108		.105	.067	−.139				21
22	−.019	−.039	.030	.091		.080	.050	−.114				22
					α= − 3		δ= 0.0					
1	.834	.716	.727	.677		.680	.716	.816				1
2	.149	.179	.218	.238		.235	.336	.161				2
3	.114	.092	.082	.104		.322	.250	.006				3
4	.105	.077	.098	.116		.349	.228	.005				4
5	.089	.063	.072	.508		.278	.215	−.007				5
6	.063	.054	.058	.541		.211	.184	−.021				6
7	.061	.049	.050	.505		.163	.140	−.034				7
8	.053	.033	.430	.466		.068	.098	−.053				8
9	.048	.013	.478	.114		.011	.079	−.059				9
10	.046	.285		−.320		−.024	.049	−.086				10
11	.041	.415		−.195		−.036						11
12	.067	.439		−.081		−.030	.028	−.093				12
13	.334	.453	−.333	−.013		−.015	.017	−.113				13
14	.424	.448	−.202	.010		.002	.010	−.001				14
15	.454	−.189	−.127	.004		−.030	−.020	−.149				15
16	.459	−.337	−.105	−.050		−.062	−.041	−.016				16
17		−.154	−.049	−.032		−.038	−.034	−.104				17
18		−.273	−.091	.056		−.006	−.015	−.071				18
19	−.109	−.163	−.051	.028		.003	−.016	−.116				19
20	−.316	−.078	−.031	.030		.008	−.019	−.114				20
21	−.073	−.052	−.009	.030		.011	−.027	−.124				21
22	−.065	−.089	−.021	.025		−.002	−.035	−.116				22
					α= 0		δ= 0.0					
1	.856	.802	.729	.617		.725	.638	.860				1
2	.105	.085	.121	.147		.144	.179	.112				2
3	.050	.029	.035	.068		.134	.124	−.017				3
4	.051	.012	.017	.029		.238	.145	.050				4
5	.035	.001	.003	.390		.197	.124	.034				5
6	.016	−.001	.001	.435		.132	.096	.020				6
7	.012	−.004	−.007	.389		.080	.072	.022				7
8	.006	−.021	.352	.382		.044	.065	.007				8
9	.003	−.034	.387	.014		−.016	.051	.019				9
10	−.007	.155		−.319		−.052	.023	−.007				10
11	−.005	.343		−.209		−.073						11
12	.003	.364		−.113		−.076	−.004	−.011				12
13	.245	.379	−.337	−.054		−.071	−.020	−.014				13
14	.355	.365	−.218	−.028		−.055	−.032	.073				14
15	.386	−.189	−.148	−.031		−.076	−.055	−.040				15
16	.399	−.347	−.121	−.049		−.063	−.035	.048				16
17		−.115	−.072	−.030		−.031	−.031	−.015				17
18		−.277	−.128	.000		−.051	−.063	−.028				18
19	−.124	−.186	−.086	−.028		−.049	−.065	−.031				19
20	−.332	−.109	−.064	−.022		−.043	−.068	−.031				20
21	−.084	−.082	−.048	−.019		−.038	−.068	−.038				21
22	−.095	−.109	−.056	−.020		−.047	−.066	−.041				22

Table21 Continued

Pressure coefficients on swept wing

Configuration23 M=1.61 R=3.6 x 10^6

Orif	Station 1	2	3	4	24	5	6	7	8	9	10	Orif
					α= 3		δ= 0.0					
1	.885	.808	.740	.416		.746	.481	.849				1
2	.056	-.028	-.036	-.039		-.045	-.038	-.015				2
3	-.019	-.030	-.044	-.031		-.031	-.032	-.019				3
4	.002	-.048	-.056	-.062		.042	-.056	-.065				4
5	-.012	-.058	-.068	.287		.095	-.057	-.053				5
6	-.027	-.055	-.080	.312		.051	-.009	-.063				6
7	-.035	-.056	-.080	.252		.000	-.011	-.060				7
8	-.042	-.068	.261	.245		-.052	-.026	-.073				8
9	-.043	-.081	.289	-.085		-.063	-.038	-.061				9
10	-.050	-.027		-.338		-.096	-.059	-.056				10
11	-.052	.263		-.240		-.120						11
12	-.045	.288		-.164		-.133	-.052	-.067				12
13	.121	.298	-.356	-.114		-.136	-.063	-.051				13
14	.275	.279	-.264	-.087		-.124	-.078	.095				14
15	.310	-.169	-.194	-.082		-.138	-.097	-.077				15
16	.336	-.362	-.168	-.065		-.080	-.050	.019				16
17		-.120	-.098	-.044		-.047	-.047	-.044				17
18		-.298	-.169	-.065		-.107	-.106	-.079				18
19	-.138	-.204	-.134	-.088		-.107	-.115	-.041				19
20	-.335	-.133	-.112	-.081		-.101	-.116	-.051				20
21	-.103	-.105	-.094	-.078		-.098	-.114	-.064				21
22	-.112	-.118	-.105	-.075		-.103	-.107	-.068				22
					α= 6		δ= 0.0					
1	.889	.778	.640	.221		.758	.305	.877				1
2	.001	-.142	-.149	-.163		-.169	-.168	-.116				2
3	-.086	-.134	-.146	-.145		-.159	-.153	-.113				3
4	-.053	-.116	-.167	-.164		-.158	-.170	-.166				4
5	-.065	-.125	-.168	.155		-.087	-.168	-.159				5
6	-.081	-.119	-.167	.177		-.045	-.174	-.158				6
7	-.086	-.116	-.148	.122		-.080	-.185	-.155				7
8	-.098	-.123	.175	.148		-.125	-.190	-.176				8
9	-.098	-.134	.190	-.181		-.157	-.176	-.212				9
10	-.101	-.126		-.367		-.161	-.145	-.253				10
11	-.103	.176		-.291		-.163						11
12	-.103	.211		-.228		-.181	-.135	-.282				12
13	-.033	.228	-.377	-.181		-.195	-.144	-.301				13
14	.204	.211	-.306	-.153		-.196	-.151	-.227				14
15	.240	-.239	-.243	-.142		-.211	-.144	-.265				15
16	.267	-.392	-.209	-.078		-.093	-.070	-.120				16
17		-.145	-.106	-.060		-.063	-.063	-.239				17
18		-.329	-.210	-.154		-.183	-.154	-.272				18
19	-.123	-.229	-.179	-.165		-.191	-.157	-.260				19
20	-.377	-.165	-.161	-.149		-.184	-.155	-.259				20
21	-.163	-.142	-.145	-.144		-.179	-.153	-.273				21
22	-.166	-.146	-.151	-.144		-.176	-.154	-.258				22
					α= 9		δ= 0.0					
1	.932	.451	.427	-.003		.736	.142	1.008				1
2	-.053	-.225	-.241	-.261		-.268	-.276	-.262				2
3	-.145	-.225	-.236	-.238		-.256	-.257	-.264				3
4	-.103	-.216	-.249	-.250		-.254	-.265	-.273				4
5	-.113	-.178	-.258	.031		-.237	-.259	-.333				5
6	-.126	-.176	-.259	.045		-.195	-.264	-.359				6
7	-.128	-.165	-.210	.016		-.171	-.270	-.365				7
8	-.142	-.173	.023	.022		-.190	-.268	-.372				8
9	-.142	-.180	.029	-.266		-.215	-.267	-.378				9
10	-.144	-.172		-.386		-.227	-.262	-.367				10
11	-.146	.078		-.331		-.233						11
12	-.149	.141		-.285		-.232	-.256	-.383				12
13	-.125	.161	-.399	-.250		-.244	-.248	-.408				13
14	.128	.134	-.333	-.229		-.249	-.237	-.353				14
15	.183	-.244	-.274	-.214		-.259	-.186	-.388				15
16	.204	-.413	-.249	-.139		-.132	-.126	-.208				16
17		-.177	-.158	-.111		-.114	-.117	-.365				17
18		-.349	-.250	-.247		-.251	-.220	-.375				18
19	-.105	-.258	-.218	-.229		-.261	-.219	-.375				19
20	-.390	-.194	-.203	-.213		-.252	-.206	-.375				20
21	-.210	-.174	-.190	-.206		-.250	-.201	-.388				21
22	-.205	-.177	-.188	-.211		-.251	-.201	-.361				22

Table21 Concluded

Pressure coefficients on swept wing.

Configuration23 M=1.61 R=3.6 x 10^6

Orif	Station 1	2	3	4	24	5	6	7	8	9	10	Orif
					α= 12		δ= 0.0					
1	.967	.237	.175	-.218		.633	-.014	.864				1
2	-.098	-.306	-.323	-.350		-.356	-.380	-.424				2
3	-.185	-.300	-.317	-.330		-.335	-.357	-.425				3
4	-.145	-.303	-.321	-.258		-.328	-.348	-.433				4
5	-.154	-.278	-.327	-.086		-.307	-.346	-.458				5
6	-.168	-.234	-.326	-.053		-.283	-.346	-.467				6
7	-.171	-.218	-.149	-.058		-.272	-.347	-.462				7
8	-.180	-.220	-.087	-.070		-.284	-.347	-.462				8
9	-.183	-.225	-.087	-.344		-.294	-.344	-.459				9
10	-.184	-.214		-.408		-.297	-.345	-.446				10
11	-.189	-.013		-.367		-.299						11
12	-.188	.065		-.332		-.298	-.340	-.454				12
13	-.145	.117	-.418	-.309		-.301	-.340	-.485				13
14	.045	.113	-.365	-.293		-.303	-.338	-.446				14
15	.145	-.221	-.320	-.265		-.286	-.233	-.457				15
16	.173	-.430	-.298	-.202		-.175	-.189	-.232				16
17		-.192	-.185	-.167		-.157	-.164	-.436				17
18		-.369	-.297	-.318		-.292	-.308	-.444				18
19	-.097	-.276	-.272	-.287		-.316	-.304	-.448				19
20	-.406	-.221	-.256	-.274		-.313	-.281	-.452				20
21	-.282	-.204	-.243	-.261		-.313	-.274	-.450				21
22	-.249	-.212	-.228	-.255		-.313	-.265	-.427				22
					α= 15		δ= 0.0					
1	.994	.109	-.059	-.363		.425	-.215	.694				1
2	-.134	-.369	-.389	-.415		-.423	-.448	-.485				2
3	-.212	-.356	-.377	-.375		-.400	-.430	-.485				3
4	-.182	-.356	-.375	-.246		-.386	-.416	-.491				4
5	-.191	-.351	-.373	-.168		-.367	-.410	-.504				5
6	-.204	-.306	-.370	-.156		-.350	-.409	-.505				6
7	-.204	-.261	-.223	-.147		-.333	-.408	-.500				7
8	-.214	-.256	-.167	-.145		-.339	-.404	-.498				8
9	-.216	-.259	-.152	-.374		-.344	-.404	-.494				9
10	-.222	-.249		-.429		-.344	-.400	-.488				10
11	-.223	-.154		-.393		-.347						11
12	-.221	.007		-.363		-.346	-.392	-.494				12
13	-.162	.089	-.432	-.340		-.345	-.392	-.530				13
14	.023	.097	-.391	-.323		-.344	-.390	-.494				14
15	.102	-.246	-.366	-.297		-.283	-.282	-.495				15
16	.134	-.443	-.358	-.245		-.203	-.231	-.254				16
17		-.214	-.176	-.183		-.183	-.184	-.478				17
18		-.387	-.356	-.348		-.334	-.366	-.488				18
19	-.112	-.290	-.330	-.305		-.353	-.367	-.491				19
20	-.397	-.240	-.309	-.282		-.348	-.348	-.493				20
21	-.326	-.224	-.290	-.259		-.349	-.339	-.487				21
22	-.288	-.232	-.256	-.229		-.348	-.329	-.462				22
					α=		δ=					

Table 22

Pressure coefficients on swept wing

Configuration 24 M= 1.61 R= 3.6 x 10^6

Orf	Station 1	2	3	4	24	5	6	7	8	9	10	Off
					α= -15		δ= 0.0					
1	.610	.656	.630	.727		-.297	.183	-.352				1
2	.458	.578	.638	.751		.818	.785	.464				2
3	.457	.502	.577	.720		.788	.743	.410				3
4	.432	.452	.531	.714		.757	.684	.267				4
5	.409	.444	.635	.710		.742	.638	.212				5
6	.382	.441	.683	.714		.726	.580	.174				6
7	.393	.418	.683	.713		.694	.542	.144				7
8	.413	.692	.707	.733		.647	.513	.128				8
9	.420	.814	.736	.767		.572	.483	.091				9
10	.653	.823		.791		.478	.437	.069				10
11	.843	.791		.907		.380						11
12	.914	.777		.928		.292	.393	-.011				12
13	.888	.582	.755	.900		.230	.372	-.048				13
14	.485	.448	.054	-.213		.201	.342	-.171				14
15	.501	.172	-.093	-.186		.136	.245	-.249				15
16	.448	.136	-.081	-.177		-.028	-.196	-.115				16
17		.060	-.127	-.187		-.202	-.169	-.252				17
18		.179	.048	-.104		.085	.273	-.010				18
19	.266	.201	.104	.028		.202	.279	-.037				19
20	.243	.224	.136	.136		.261	.287	-.050				20
21	.230	.227	.181	.209		.289	.287	-.057				21
22	.093	.103	.133	.155		.263	.246	-.039				22
					α= -12		δ= 0.0					
1	.708	.675	.704	.643		.016	.478	-.110				1
2	.424	.483	.521	.524		.680	.707	.395				2
3	.355	.406	.439	.446		.650	.671	.323				3
4	.343	.343	.397	.445		.631	.612	.226				4
5	.317	.323	.350	.571		.630	.565	.144				5
6	.292	.304	.334	.603		.639	.521	.105				6
7	.287	.288	.506	.612		.614	.465	.074				7
8	.282	.348	.594	.641		.584	.438	.056				8
9	.282	.631	.650	.690		.532	.405	.027				9
10	.455	.642		.713		.447	.363	.003				10
11	.660	.637		.827		.349						11
12	.708	.566		.803		.254	.301	-.065				12
13	.639	.641	.711	.700		.174	.268	-.089				13
14	.356	.368	.026	-.282		.129	.245	-.182				14
15	.357	.116	-.115	-.258		.063	.171	-.256				15
16	.362	.086	-.102	-.230		-.083	-.176	-.126				16
17		.018	-.158	-.209		-.186	-.162	-.275				17
18		.125	.001	-.165		.012	.189	-.036				18
19	.220	.141	.048	-.039		.068	.176	-.071				19
20	.192	.149	.076	.070		.095	.162	-.087				20
21	.169	.150	.103	.143		.130	.162	-.102				21
22	.035	.059	.048	.097		.141	.158	-.081				22
					α= -9		δ= 0.0					
1	.781	.700	.744	.645		.308	.649	.192				1
2	.516	.401	.442	.454		.473	.615	.365				2
3	.282	.318	.340	.347		.422	.580	.258				3
4	.268	.268	.309	.327		.540	.532	.171				4
5	.245	.241	.266	.306		.543	.491	.107				5
6	.223	.227	.251	.424		.555	.458	.066				6
7	.217	.212	.273	.508		.553	.413	.035				7
8	.208	.195	.492	.574		.521	.392	.021				8
9	.208	.528	.563	.626		.466	.360	-.005				9
10	.346	.551		.649		.411	.316	-.023				10
11	.564	.554		.724		.322						11
12	.612	.476		.644		.233	.264	-.097				12
13	.542	.584	.653	.500		.148	.223	-.118				13
14	.271	.277	-.031	-.335		.092	.198	-.199				14
15	.279	.056	-.141	-.293		.023	.133	-.277				15
16	.294	.031	-.135	-.234		-.113	-.156	-.143				16
17		-.023	-.167	-.198		-.159	-.148	-.283				17
18		.049	-.062	-.201		-.015	.130	-.088				18
19	.159	.059	-.022	-.068		.006	.108	-.123				19
20	.133	.068	.006	.020		.013	.079	-.162				20
21	.109	.080	.036	.068		.026	.060	-.160				21
22	-.017	.017	-.007	.049		.034	.031	-.150				22

Table 22 Continued

Pressure coefficients on swept wing

Configuration 24 M= 1.61 R= 3.6 x 10^6

Orif	Station 1	2	3	4	24	5	6	7	8	9	10	Orif
					α= − 6		δ= 0.0					
1	.809	.696	.729	.699		.558	.682	.662				1
2	.224	.299	.327	.352		.342	.377	.288				2
3	.188	.195	.221	.224		.276	.345	.157				3
4	.177	.166	.198	.208		.243	.414	.101				4
5	.158	.144	.162	.187		.212	.406	.042				5
6	.135	.133	.152	.170		.416	.383	.023				6
7	.131	.129	.144	.334		.451	.339	.007				7
8	.122	.106	.373	.483		.436	.323	−.001				8
9	.118	.427	.460	.526		.392	.302	−.017				9
10	.270	.448		.535		.330	.280	−.039				10
11	.446	.456		.576		.283						11
12	.488	.382		.380		.211	.232	−.077				12
13	.416	.494	.582	.100		.132	.191	−.107				13
14	.190	.199	−.058	−.349		.076	.163	−.138				14
15	.202	−.001	−.158	−.287		.001	.093	−.251				15
16	.216	−.027	−.157	−.220		−.116	−.118	−.120				16
17		−.049	−.163	−.140		−.116	−.114	−.240				17
18		−.017	−.128	−.211		−.015	.104	−.051				18
19	.093	−.018	−.096	−.073		−.015	.072	−.103				19
20	.074	−.002	−.054	−.006		−.019	.039	−.144				20
21	.047	.021	−.026	.026		−.019	.020	−.147				21
22	−.064	−.024	−.047	.020		−.019	−.008	−.136				22
					α= − 3		δ= 0.0					
1	.831	.710	.731	.683		.680	.666	.830				1
2	.153	.176	.223	.242		.226	.250	.132				2
3	.116	.092	.090	.104		.149	.149	−.051				3
4	.106	.077	.100	.119		.137	.140	−.003				4
5	.088	.062	.073	.093		.104	.121	−.009				5
6	.061	.053	.062	.075		.092	.158	.024				6
7	.061	.050	.056	.127		.282	.211	.036				7
8	.054	.033	.269	.370		.301	.221	.027				8
9	.049	.337	.354	.400		.278	.216	.024				9
10	.157	.351		.414		.237	.199	−.008				10
11	.359	.362		.442		.188						11
12	.409	.298		.215		.156	.182	−.039				12
13	.334	.368	.503	−.100		.093	.155	−.063				13
14	.122	.129	−.069	−.376		.045	.126	.013				14
15	.138	−.052	−.179	−.298		−.032	.067	−.161				15
16	.143	−.097	−.184	−.217		−.115	−.097	−.029				16
17		−.078	−.152	−.085		−.089	−.086	−.114				17
18		−.087	−.184	−.254		−.039	.060	−.014				18
19	.028	−.077	−.160	−.109		−.062	.027	−.094				19
20	.018	−.070	−.119	−.056		−.073	−.006	−.092				20
21	−.009	−.045	−.088	−.035		−.076	−.022	−.107				21
22	−.103	−.072	−.093	−.033		−.085	−.055	−.100				22
					α= 0		δ= 0.0					
1	.859		.734	.628		.722	.578	.861				1
2	.104	.089	.130	.153		.144	.165	.100				2
3	.055	.031	.045	.064		.079	.072	−.041				3
4	.056	.016	−.002	.029		.043	.039	−.003				4
5	.038	.006	.003	.011		.016	.027	−.005				5
6	.019	.002	.000	−.004		.007	.009	−.017				6
7	.015	.002	−.008	.011		.080	−.006	−.007				7
8	.010	−.014	.188	.273		.184	.004	−.025				8
9	.007	.276	.276	.302		.171	.082	−.019				9
10	.032	.287		.308		.145	.100	−.038				10
11	.314	.293		.326		.110						11
12	.348	.234		.131		.080	.101	.034				12
13	.278	.307	.428	−.200		.056	.091	.032				13
14	.080	.104	−.085	−.362		.014	.089	.121				14
15	.090	−.076	−.182	−.287		−.058	.036	−.001				15
16	.098	−.124	−.183	−.214		−.111	−.082	.086				16
17		−.092	−.131	−.076		−.086	−.075	−.024				17
18		−.107	−.195	−.248		−.042	.059	.018				18
19	−.005	−.089	−.170	−.114		−.068	.025	.019				19
20	−.009	−.088	−.137	−.065		−.073	−.001	.013				20
21	−.033	−.070	−.108	−.047		−.079	−.015	.001				21
22	−.119	−.091	−.114	−.049		−.085	−.034	−.007				22

Table 22 Continued

Pressure coefficients on swept wing

Configuration 24 M= 1.61 R= 3.6 x 10^6

Orif	Station 1	2	3	4	24	5	6	7	8	9	10	Orif
					α= 3		δ= 0.0					
1	.887	.801	.735	.406		.743	.444	.850				1
2	.051	-.042	-.044	-.050		-.055	-.048	-.021				2
3	-.022	-.039	-.048	-.035		-.048	-.040	-.023				3
4	-.006	-.052	-.063	-.074		-.066	-.065	-.073				4
5	-.018	-.065	-.072	-.082		-.073	-.078	-.060				5
6	-.036	-.062	-.082	-.090		-.088	-.090	-.075				6
7	-.038	-.062	-.085	-.082		-.095	-.104	-.065				7
8	-.049	-.072	.106	.164		.009	-.107	-.089				8
9	-.049	.197	.185	.183		.041	-.108	-.083				9
10	-.040	.211		.186		.028	-.112	-.103				10
11	.240	.217		.192		.007						11
12	.270	.162		.028		-.013	-.028	-.146				12
13	.204	.245	.352	-.250		-.034	-.017	-.127				13
14	.021	.047	-.130	-.377		-.042	-.022	-.008				14
15	.025	-.126	-.201	-.302		-.094	-.048	-.134				15
16	.027	-.172	-.193	-.223		-.112	-.057	-.008				16
17		-.105	-.103	-.084		-.093	-.052	-.090				17
18		-.161	-.216	-.283		-.093	-.032	-.135				18
19	-.056	-.127	-.206	-.141		-.115	-.034	-.103				19
20	-.062	-.130	-.183	-.113		-.119	-.040	-.086				20
21	-.079	-.118	-.159	-.102		-.125	-.044	-.088				21
22	-.148	-.134	-.158	-.107		-.134	-.059	-.077				22
					α= 6		δ= 0.0					
1	.891	.759	.632	.204		.759	.274	.893				1
2	-.003	-.148	-.160	-.172		-.180	-.180	-.127				2
3	-.089	-.144	-.158	-.153		-.169	-.166	-.127				3
4	-.058	-.125	-.175	-.173		-.177	-.181	-.173				4
5	-.069	-.130	-.179	-.178		-.180	-.181	-.176				5
6	-.085	-.124	-.180	-.187		-.184	-.187	-.166				6
7	-.088	-.117	-.158	-.119		-.191	-.197	-.172				7
8	-.103	-.126	.043	.061		-.167	-.202	-.200				8
9	-.101	.131	.095	.057		-.089	-.201	-.241				9
10	-.079	.133		.049		-.085	-.212	-.282				10
11	.178	.139		.057		-.101						11
12	.211	.094		-.076		-.116	-.199	-.295				12
13	.144	.157	.237	-.370		-.133	-.189	-.309				13
14	-.030	-.036	-.166	-.385		-.141	-.169	-.240				14
15	-.032	-.173	-.229	-.306		-.167	-.133	-.294				15
16	-.039	-.199	-.224	-.249		-.121	-.069	-.143				16
17		-.110	-.106	-.085		-.098	-.062	-.260				17
18		-.198	-.250	-.278		-.147	-.146	-.290				18
19	-.108	-.166	-.236	-.185		-.172	-.137	-.303				19
20	-.116	-.160	-.216	-.153		-.175	-.123	-.286				20
21	-.127	-.156	-.196	-.145		-.174	-.117	-.296				21
22	-.175	-.177	-.192	-.153		-.180	-.116	-.292				22
					α= 9		δ= 0.0					
1	.927	.500	.459	.034		.740	.144	1.010				1
2	-.048	-.218	-.234	-.254		-.261	-.272	-.249				2
3	-.138	-.218	-.228	-.231		-.248	-.254	-.257				3
4	-.099	-.208	-.241	-.244		-.253	-.258	-.246				4
5	-.108	-.173	-.250	-.250		-.255	-.257	-.323				5
6	-.125	-.172	-.250	-.255		-.254	-.261	-.352				6
7	-.127	-.161	-.248	-.164		-.257	-.266	-.367				7
8	-.137	-.168	-.025	-.034		-.261	-.267	-.377				8
9	-.140	.071	-.005	-.034		-.199	-.268	-.393				9
10	-.113	.078		-.038		-.169	-.271	-.372				10
11	.121	.087		-.031		-.174						11
12	.160	.044		-.122		-.183	-.263	-.381				12
13	.095	.097	.168	-.380		-.198	-.265	-.414				13
14	-.073	-.081	-.250	-.395		-.208	-.263	-.361				14
15	-.069	-.209	-.256	-.345		-.198	-.166	-.396				15
16	-.076	-.217	-.250	-.304		-.105	-.105	-.217				16
17		-.102	-.112	-.095		-.089	-.085	-.321				17
18		-.214	-.289	-.302		-.213	-.238	-.381				18
19	-.152	-.190	-.271	-.241		-.232	-.224	-.382				19
20	-.155	-.183	-.254	-.211		-.236	-.197	-.397				20
21	-.163	-.176	-.230	-.195		-.241	-.193	-.388				21
22	-.198	-.201	-.217	-.201		-.242	-.192	-.372				22

Table22 Concluded

Pressure coefficients on swept wing

Configuration24 M=1.61 R=3.6 x 10^6

Orif	Station 1	2	3	4	24	5	6	7	8	9	10	Orif
					α= 12		δ= 0.0					
1	.966	.242	.175	-.211		.635	-.034	.860				1
2	-.096	-.304	-.322	-.344		-.353	-.375	-.411				2
3	-.186	-.298	-.316	-.323		-.337	-.354	-.415				3
4	-.144	-.296	-.321	-.324		-.335	-.344	-.415				4
5	-.155	-.282	-.324	-.325		-.333	-.345	-.440				5
6	-.171	-.230	-.323	-.328		-.333	-.343	-.454				6
7	-.172	-.215	-.320	-.182		-.333	-.344	-.457				7
8	-.182	-.220	-.107	-.120		-.337	-.342	-.460				8
9	-.184	-.032	-.110	-.125		-.297	-.342	-.461				9
10	-.137	.021		-.135		-.254	-.342	-.442				10
11	.049	.036		-.133		-.256						11
12	.103	-.015		-.171		-.266	-.337	-.446				12
13	.040	.043	-.043	-.350		-.277	-.339	-.476				13
14	-.111	-.100	-.229	-.415		-.282	-.338	-.441				14
15	-.101	-.235	-.300	-.381		-.187	-.183	-.454				15
16	-.095	-.260	-.289	-.351		-.135	-.163	-.243				16
17		-.058	-.064	-.064		-.066	-.066	-.301				17
18		-.288	-.290	-.341		-.293	-.318	-.452				18
19	-.188	-.262	-.283	-.301		-.306	-.311	-.453				19
20	-.194	-.244	-.279	-.281		-.305	-.300	-.462				20
21	-.203	-.224	-.266	-.266		-.309	-.288	-.452				21
22	-.239	-.233	-.255	-.255		-.310	-.279	-.429				22
					α= 15		δ= 0.0					
1	.997	.099	-.061	-.376		.421	-.242	.699				1
2	-.133	-.376	-.395	-.424		-.438	-.456	-.487				2
3	-.214	-.359	-.380	-.402		-.419	-.440	-.487				3
4	-.186	-.359	-.379	-.392		-.411	-.424	-.489				4
5	-.195	-.353	-.378	-.388		-.406	-.418	-.497				5
6	-.206	-.308	-.374	-.387		-.399	-.416	-.501				6
7	-.207	-.266	-.366	-.277		-.388	-.416	-.498				7
8	-.215	-.257	-.174	-.204		-.369	-.409	-.498				8
9	-.219	-.149	-.178	-.200		-.346	-.409	-.496				9
10	-.200	-.024		-.205		-.337	-.406	-.488				10
11	.003	.008		-.200		-.336						11
12	.048	-.038		-.221		-.337	-.396	-.492				12
13	-.005	.022	-.122	-.350		-.345	-.398	-.527				13
14	-.143	-.193	-.301	-.435		-.347	-.395	-.486				14
15	-.127	-.290	-.350	-.415		-.234	-.217	-.488				15
16	-.105	-.299	-.338	-.389		-.129	-.190	-.250				16
17		.064	.065	.129		.194	.210	-.178				17
18		-.301	-.326	-.376		-.350	-.374	-.486				18
19	-.229	-.283	-.317	-.336		-.375	-.378	-.487				19
20	-.238	-.272	-.314	-.309		-.371	-.365	-.495				20
21	-.240	-.258	-.304	-.282		-.364	-.361	-.486				21
22	-.258	-.251	-.265	-.240		-.356	-.351	-.463				22
					α=		δ=					

Table23

Pressure coefficients on swept wing

Configuration25 M=1.61 R=3.6 x 10^6

Orif	Station 1	2	3	4	24	5	6	7	8	9	10	Orif
					α=-15		δ= 0.0					
1	.627	.656	.644	.686		-.144	.437	-.310				1
2	.444	.561	.612	.619		.665	.673	.502				2
3	.442	.481	.551	.557		.593	.642	.457				3
4	.416	.427	.513	.534		.548	.674	.358				4
5	.388	.417	.463	.498		.514	.709	.278				5
6	.363	.414	.440	.466		.487	.700	.254				6
7	.370	.396	.416	.439		.464	.705	.236				7
8	.385	.380	.381	.422		.444	.702	.226				8
9	.388	.362	.390	.422		.507	.696	.189				9
10	.372	.377		.415		.687	.676	.175				10
11	.381	.381		.418		.729						11
12	.386	.388		.435		.734	.646	.075				12
13	.375	.385	.393	.625		.732	.621	.052				13
14	.373	.362	.364	.714		.706	.591	-.137				14
15	.385	.304	.520	.731		.628	.539	-.129				15
16	.483	.215	.614	.712		.575	.515	.066				16
17		.235	.613	.751		.612	.542	-.114				17
18		.543	.743	.891		.781	.501	.135				18
19	.438	.772	.902	.963		.785	.501	.101				19
20	.667	.856	.974	.993		.682	.471	.045				20
21	.732	.907	1.036	1.018		.571	.436	.008				21
22	.984	1.049	1.090	1.033		.347	.309	-.010				22
					α=-12		δ= 0.0					
1	.721	.679	.710	.633		.119	.601	.195				1
2	.429	.475	.505	.516		.547	.561	.357				2
3	.349	.394	.426	.432		.468	.500	.245				3
4	.332	.334	.385	.407		.433	.439	.168				4
5	.310	.315	.341	.373		.393	.413	.113				5
6	.283	.293	.321	.343		.356	.386	.087				6
7	.278	.277	.292	.308		.334	.350	.092				7
8	.273	.252	.253	.276		.306	.357	.142				8
9	.271	.236	.252	.277		.314	.362	.143				9
10	.250	.245		.298		.323	.385	.140				10
11	.256	.252		.304		.331						11
12	.264	.260		.314		.347	.552	.065				12
13	.254	.264	.300	.307		.466	.566	.037				13
14	.250	.258	.274	.330		.563	.550	-.142				14
15	.257	.217	.261	.555		.526	.493	-.128				15
16	.363	.085	.382	.589		.490	.466	.077				16
17		.095	.397	.585		.532	.475	-.145				17
18		.439	.521	.665		.717	.484	.139				18
19	.217	.641	.695	.770		.699	.533	.104				19
20	.500	.703	.767	.836		.626	.475	.048				20
21	.621	.682	.829	.876		.536	.435	.008				21
22	.849	.826	.917	.929		.323	.306	-.006				22
					α=- 9		δ= 0.0					
1	.782	.700	.744	.648		.341	.666	.472				1
2	.486	.390	.431	.447		.462	.477	.307				2
3	.272	.307	.332	.340		.383	.405	.162				3
4	.256	.256	.302	.320		.348	.347	.093				4
5	.234	.234	.257	.292		.317	.321	.028				5
6	.209	.221	.239	.267		.285	.292	.003				6
7	.205	.208	.223	.236		.255	.244	-.020				7
8	.196	.181	.180	.202		.207	.233	-.029				8
9	.196	.165	.173	.185		.200	.231	-.040				9
10	.176	.174		.201		.209	.232	-.053				10
11	.182	.182		.207		.217						11
12	.192	.188		.213		.221	.239	-.081				12
13	.182	.190	.202	.210		.223	.236	-.101				13
14	.176	.180	.190	.199		.224	.233	-.169				14
15	.172	.141	.147	.207		.198	.217	-.208				15
16	.277	-.016	.153	.318		.245	.236	-.029				16
17		-.005	.181	.316		.280	.254	-.189				17
18		.379	.399	.503		.462	.358	.057				18
19	.133	.525	.574	.645		.567	.427	.055				19
20	.340	.569	.631	.700		.516	.391	.022				20
21	.489	.506	.678	.725		.436	.353	-.017				21
22	.781	.655	.756	.803		.249	.240	-.028				22

Table 23 Continued

Pressure coefficients on swept wing

Configuration 25 M= 1.61 R= 3.6 x 10^6

Orif	Station 1	2	3	4	24	5	6	7	8	9	10	Orif
					α= - 6		δ= 0.0					
1	.807	.694	.725	.688		.548	.677	.718				1
2	.226	.301	.325	.360		.349	.372	.221				2
3	.191	.197	.221	.230		.280	.288	.063				3
4	.180	.167	.197	.215		.249	.248	.024				4
5	.161	.145	.167	.193		.213	.230	-.013				5
6	.139	.133	.154	.176		.198	.204	-.026				6
7	.131	.128	.142	.153		.175	.171	-.043				7
8	.125	.102	.105	.127		.132	.150	-.058				8
9	.125	.087	.089	.103		.117	.139	-.069				9
10	.107	.096		.110		.116	.129	-.086				10
11	.112	.101		.115		.119						11
12	.119	.109		.126		.124	.138	-.083				12
13	.114	.112	.120	.128		.129	.134	-.118				13
14	.110	.103	.117	.121		.139	.133	-.099				14
15	.101	.069	.080	.116		.098	.113	-.229				15
16	.185	.046	.080	.162		.093	.115	-.099				16
17		.049	.117	.182		.125	.124	-.209				17
18		.291	.330	.445		.256	.182	.009				18
19	.086	.416	.469	.555		.426	.243	-.044				19
20	.264	.458	.523	.592		.412	.256	-.065				20
21	.364	.399	.565	.597		.355	.247	-.052				21
22	.736	.541	.659	.632		.200	.164	-.069				22
					α= - 3		δ= 0.0					
1	.823	.695	.730	.689		.674	.668	.824				1
2	.157	.195	.236	.254		.241	.264	.142				2
3	.124	.110	.100	.117		.173	.167	-.038				3
4	.112	.089	.115	.129		.150	.148	.004				4
5	.095	.074	.087	.103		.117	.130	-.007				5
6	.074	.062	.074	.087		.106	.109	-.024				6
7	.068	.061	.065	.069		.089	.087	-.023				7
8	.061	.040	.039	.047		.056	.069	-.038				8
9	.060	.023	.021	.031		.038	.059	-.036				9
10	.047	.032		.033		.040	.047	-.063				10
11	.049	.038		.036		.041						11
12	.054	.047		.043		.046	.051	-.069				12
13	.049	.050	.051	.045		.047	.051	-.097				13
14	.048	.044	.049	.047		.057	.051	.019				14
15	.036	.014	.023	.044		.023	.036	-.123				15
16	.115	.054	.050	.108		.054	.074	-.010				16
17		.068	.090	.136		.094	.093	-.108				17
18		.236	.289	.381		.177	.082	-.013				18
19	.041	.344	.392	.466		.291	.122	-.058				19
20	.191	.381	.433	.494		.296	.133	-.062				20
21	.299	.328	.471	.488		.256	.128	-.064				21
22	.604	.468	.584	.520		.126	.049	-.052				22
					α= 0		δ= 0.0					
1	.858	.799	.725	.619		.724	.609	.854				1
2	.106	.088	.125	.142		.136	.158	.101				2
3	.054	.032	.045	.060		.071	.072	-.039				3
4	.054	.014	.024	.022		.035	.034	-.009				4
5	.037	.004	-.001	.004		.011	.024	-.007				5
6	.017	.000	-.007	-.007		.002	.008	-.017				6
7	.013	.000	-.015	-.019		-.007	-.012	-.014				7
8	.007	-.017	-.036	-.033		-.030	-.023	-.033				8
9	.007	-.032	-.045	-.047		-.045	-.029	-.023				9
10	-.004	-.025		-.043		-.044	-.040	-.051				10
11	-.004	-.019		-.041		-.039						11
12	.002	-.009		-.032		-.034	-.035	-.056				12
13	-.007	-.005	-.021	-.030		-.034	-.037	-.058				13
14	-.006	-.008	-.020	-.031		-.034	-.037	.050				14
15	-.016	-.037	-.039	-.028		-.055	-.030	-.069				15
16	.066	.052	.026	.085		.037	.039	.035				16
17		.072	.066	.112		.077	.068	-.035				17
18		.181	.244	.318		.122	-.014	-.043				18
19	-.003	.273	.314	.372		.174	.013	-.026				19
20	.112	.304	.343	.395		.179	.030	-.019				20
21	.240	.254	.372	.377		.146	.030	-.019				21
22	.445	.399	.492	.410		.034	-.034	-.021				22

Table 23 Continued

Pressure coefficients on swept wing

Configuration 25 M= 1.61 R=3.6 x 10^6

Orif	Station 1	2	3	4	24	5	6	7	8	9	10	Orif
					α= 3		δ= 0.0					
1	.881	.804	.715	.412		.744	.434	.854				1
2	.048	-.039	-.049	-.054		-.064	-.056	-.025				2
3	-.020	-.042	-.050	-.043		-.054	-.047	-.026				3
4	-.007	-.054	-.067	-.077		-.074	-.073	-.076				4
5	-.020	-.065	-.073	-.085		-.079	-.085	-.062				5
6	-.035	-.062	-.085	-.094		-.092	-.095	-.078				6
7	-.046	-.063	-.088	-.099		-.108	-.109	-.076				7
8	-.051	-.073	-.100	-.114		-.122	-.116	-.094				8
9	-.053	-.084	-.106	-.124		-.129	-.117	-.088				9
10	-.060	-.079		-.121		-.129	-.129	-.104				10
11	-.061	-.073		-.117		-.126						11
12	-.057	-.064		-.106		-.120	-.124	-.159				12
13	-.060	-.064	-.079	-.101		-.125	-.128	-.147				13
14	-.060	-.061	-.077	-.098		-.116	-.131	-.042				14
15	-.065	-.085	-.088	-.034		-.100	-.094	-.137				15
16	-.040	.027	.022	.074		.015	-.007	-.027				16
17		.054	.052	.083		.044	.040	-.095				17
18		.089	.191	.228		.063	-.114	-.141				18
19	-.050	.188	.234	.258		.080	-.084	-.120				19
20	.069	.212	.252	.271		.061	-.051	-.126				20
21	.179	.181	.268	.241		.027	-.049	-.137				21
22	.192	.334	.350	.297		-.074	-.094	-.135				22
					α= 6		δ= 0.0					
1	.897	.775	.632	.228		.755	.280	.884				1
2	.003	-.142	-.155	-.165		-.178	-.178	-.132				2
3	-.086	-.136	-.151	-.150		-.165	-.164	-.128				3
4	-.055	-.118	-.168	-.168		-.174	-.180	-.176				4
5	-.065	-.128	-.171	-.176		-.178	-.180	-.176				5
6	-.084	-.120	-.171	-.183		-.182	-.186	-.169				6
7	-.087	-.115	-.153	-.190		-.187	-.200	-.170				7
8	-.098	-.124	-.163	-.200		-.201	-.204	-.198				8
9	-.095	-.135	-.168	-.211		-.208	-.206	-.240				9
10	-.099	-.128		-.203		-.208	-.211	-.286				10
11	-.102	-.122		-.191		-.206						11
12	-.102	-.114		-.172		-.202	-.204	-.302				12
13	-.102	-.111	-.130	-.164		-.187	-.201	-.306				13
14	-.103	-.113	-.132	-.141		-.155	-.194	-.236				14
15	-.107	-.131	-.090	.003		-.069	-.122	-.284				15
16	-.094	-.034	.021	.052		-.008	-.053	-.134				16
17		.029	.025	.048		.007	-.003	-.250				17
18		-.024	.152	.129		.002	-.176	-.282				18
19	-.064	.114	.175	.150		-.016	-.151	-.292				19
20	-.015	.154	.181	.157		-.051	-.116	-.284				20
21	.111	.125	.183	.139		-.089	-.111	-.297				21
22	.105	.320	.212	.230		-.175	-.144	-.290				22
					α= 9		δ= 0.0					
1	.936	.422	.400	-.023		.729	.099	.997				1
2	-.057	-.238	-.255	-.277		-.285	-.299	-.295				2
3	-.151	-.236	-.250	-.256		-.272	-.278	-.293				3
4	-.107	-.234	-.261	-.265		-.276	-.279	-.312				4
5	-.118	-.188	-.265	-.272		-.275	-.277	-.387				5
6	-.135	-.185	-.266	-.273		-.273	-.279	-.396				6
7	-.138	-.172	-.267	-.277		-.276	-.284	-.401				7
8	-.147	-.181	-.273	-.279		-.283	-.286	-.408				8
9	-.149	-.189	-.259	-.291		-.290	-.286	-.407				9
10	-.149	-.178		-.284		-.287	-.288	-.393				10
11	-.154	-.176		-.284		-.283						11
12	-.155	-.166		-.277		-.247	-.269	-.401				12
13	-.157	-.163	-.193	-.267		-.221	-.249	-.434				13
14	-.153	-.161	-.186	-.134		-.090	-.244	-.370				14
15	-.155	-.180	-.067	-.036		-.070	-.143	-.412				15
16	-.153	-.082	-.003	-.037		-.070	-.119	-.229				16
17		-.007	.002	-.010		-.055	-.057	-.307				17
18		-.127	.062	-.025		-.087	-.232	-.406				18
19	-.120	.044	.086	-.020		-.124	-.197	-.410				19
20	-.085	.098	.086	-.016		-.159	-.169	-.408				20
21	.031	.079	.083	-.024		-.201	-.165	-.408				21
22	.055	.268	.106	.110		-.271	-.181	-.344				22

Table23 Concluded

Pressure coefficients on swept wing

Configuration25 M=1.61 R=3.6 x 10^6

Orif	Station 1	2	3	4	24	5	6	7	8	9	10	Orif
					α= 12		δ= 0.0					
1	.966	.231	.174	-.218		.628	-.045	.855				1
2	-.097	-.305	-.324	-.350		-.359	-.383	-.421				2
3	-.186	-.300	-.318	-.330		-.342	-.359	-.419				3
4	-.144	-.304	-.322	-.331		-.339	-.352	-.426				4
5	-.156	-.286	-.329	-.331		-.337	-.346	-.464				5
6	-.170	-.235	-.329	-.332		-.335	-.346	-.466				6
7	-.172	-.217	-.330	-.334		-.338	-.346	-.466				7
8	-.181	-.220	-.337	-.336		-.345	-.347	-.468				8
9	-.187	-.225	-.340	-.345		-.348	-.348	-.462				9
10	-.188	-.218		-.343		-.346	-.346	-.449				10
11	-.189	-.214		-.339		-.343						11
12	-.189	-.204		-.336		-.298	-.330	-.452				12
13	-.192	-.202	-.244	-.294		-.166	-.295	-.486				13
14	-.186	-.199	-.239	-.118		-.141	-.245	-.444				14
15	-.192	-.216	-.105	-.101		-.144	-.183	-.461				15
16	-.172	-.107	-.062	-.109		-.159	-.182	-.250				16
17		-.020	-.034	-.054		-.090	-.088	-.284				17
18		-.191	-.022	-.096		-.154	-.250	-.459				18
19	-.163	-.020	.000	-.114		-.178	-.205	-.458				19
20	-.126	.083	.015	-.136		-.208	-.179	-.453				20
21	-.014	.075	.019	-.166		-.240	-.171	-.443				21
22	.014	.246	.065	-.050		-.277	-.173	-.390				22
					α= 15		δ= 0.0					
1	.992	.095	-.072	-.370		.410	-.243	.683				1
2	-.136	-.372	-.394	-.425		-.433	-.451	-.479				2
3	-.211	-.362	-.382	-.404		-.415	-.433	-.478				3
4	-.183	-.357	-.377	-.394		-.407	-.422	-.483				4
5	-.192	-.352	-.376	-.389		-.401	-.414	-.496				5
6	-.207	-.307	-.373	-.386		-.399	-.413	-.497				6
7	-.209	-.263	-.372	-.387		-.397	-.412	-.493				7
8	-.220	-.256	-.380	-.390		-.399	-.405	-.493				8
9	-.221	-.258	-.383	-.394		-.399	-.402	-.492				9
10	-.224	-.250		-.387		-.396	-.403	-.484				10
11	-.226	-.247		-.386		-.392						11
12	-.223	-.239		-.388		-.355	-.386	-.489				12
13	-.225	-.234	-.309	-.338		-.250	-.369	-.523				13
14	-.224	-.234	-.281	-.191		-.215	-.350	-.482				14
15	-.224	-.244	-.197	-.171		-.213	-.228	-.485				15
16	-.171	-.107	-.177	-.181		-.205	-.208	-.255				16
17		.079	.067	.119		.178	.200	-.165				17
18		-.236	-.137	-.155		-.176	-.342	-.483				18
19	-.191	-.180	-.092	-.173		-.180	-.310	-.482				19
20	-.165	.059	-.083	-.201		-.208	-.256	-.483				20
21	-.039	.103	-.068	-.228		-.236	-.229	-.475				21
22	.013	.213	.032	-.154		-.267	-.222	-.443				22
					α=		δ=					

Table 24

Pressure coefficients on swept wing

Configuration 46 M = 1.61 R = 3.6 x 10^6

Orif	Station 1	2	3	4	24	5	6	7	8	9	10	Orif
					α = -15		δ = 0.0					
1	.572	.653	.613	.451		-.164	.375	-.196				1
2	.468	.593	.653	.667		.693	.721	.529				2
3	.462	.526	.603	.668		.644	.690	.423				3
4	.444	.477	.550	.566		.589	.637	.313				4
5	.419	.464	.502	.532		.555	.617	.234				5
6	.409	.459	.474	.500		.533	.592	.203				6
7	.417	.425	.444	.476		.511	.581	.178				7
8	.441	.416	.416	.459		.501	.586	.160				8
9	.433	.388	.426	.447		.505	.580	.123				9
10	.408	.403		.453		.505	.551	.106				10
11	.412	.408		.460		.515						11
12	.417	.416		.471		.505	.515	.015				12
13	.403	.415	.429	.452		.492	.475	-.005				13
14	.405	.391	.393	.415		.459	.421	-.150				14
15	.414	.330	.324	.341		.360	.330	-.161				15
16	.218	.028	.102	.059		.306	.307	-.001				16
17	-.010	.013	-.023	-.034								17
18	.345	.308	.319	.122		.248	.172	-.119				18
19	.235	.163	.183	.283	.239	.187	.148	-.129				19
20	.210	.187	.184	.205	.181	.208	.150	-.121				20
21	.234	.215	.207	.338	.276	.225	.170	-.097				21
22	.122	.222	.249	.204	.217	.246	.200	-.073				22
					α = -12		δ = -30.0					
1	.723	.693	.717	.623		.114	.630	.111				1
2	.431	.479	.508	.510		.551	.566	.409				2
3	.351	.402	.431	.487		.460	.508	.355				3
4	.338	.339	.389	.410		.439	.442	.262				4
5	.315	.319	.341	.377		.400	.420	.203				5
6	.291	.298	.322	.338		.361	.454	.183				6
7	.281	.280	.295	.308		.342	.579	.164				7
8	.276	.257	.252	.277		.310	.601	.157				8
9	.276	.239	.256	.278		.355	.615	.126				9
10	.252	.248		.301		.562	.590	.111				10
11	.259	.257		.316		.626						11
12	.266	.263		.548		.641	.550	.035				12
13	.256	.267	.312	.686		.635	.521	.012				13
14	.258	.265	.587	.740		.598	.480	-.148				14
15	.282	.304	.667	.772		.526	.414	-.150				15
16	.260	.433	.671	.743		.504	.397	.009				16
17	.288	.060	-.240	-.374								17
18	.262	.381	.623	.813		.435	.209	-.109				18
19	.307	.712	.815	.934	.450	.408	.262	-.098				19
20	.751	1.189	1.134	.590	-.142	.369	.267	-.067				20
21	.866	1.059	1.051	.559	-.304	.320	.250	-.049				21
22	.642	.705	.701	.266	-.256	.231	.215	-.042				22
					α = -12		δ = -20.0					
1	.727	.691	.719	.626		.108	.634	.179				1
2	.433	.482	.514	.516		.553	.568	.322				2
3	.352	.402	.431	.491		.465	.511	.269				3
4	.342	.339	.393	.418		.438	.451	.171				4
5	.319	.318	.347	.376		.398	.427	.109				5
6	.295	.301	.321	.342		.362	.396	.081				6
7	.287	.280	.295	.312		.342	.363	.061				7
8	.280	.260	.258	.280		.315	.364	.055				8
9	.276	.243	.259	.282		.321	.365	.051				9
10	.256	.250		.304		.327	.362	.061				10
11	.261	.258		.307		.332						11
12	.271	.265		.318		.339	.435	.017				12
13	.260	.272	.305	.308		.382	.453	-.003				13
14	.259	.269	.279	.328		.462	.431	-.146				14
15	.267	.229	.304	.544		.425	.384	-.158				15
16	.187	.237	.431	.600		.408	.363	.002				16
17	.124	.043	-.124	-.289								17
18	.148	.227	.419	.557		.350	.200	-.112				18
19	.261	.466	.573	.669	.426	.369	.272	-.113				19
20	.527	.760	.808	.502	-.016	.367	.288	-.074				20
21	.558	.766	.819	.444	-.174	.350	.280	-.050				21
22	.441	.545	.567	.209	-.177	.284	.244	-.031				22

Table 24 Continued

Pressure coefficients on swept wing

Configuration 46 M = 1.61 R = 3.6 x 10^6

Orif	Station 1	2	3	4	24	5	6	7	8	9	10	Orif
					$\alpha = -12$		$\delta = -10.0$					
1	.720	.690	.716	.628		.105	.628	.168				1
2	.430	.478	.512	.515		.556	.573	.333				2
3	.348	.401	.432	.493		.465	.516	.272				3
4	.339	.339	.389	.416		.442	.453	.175				4
5	.315	.318	.345	.385		.401	.427	.120				5
6	.292	.298	.321	.347		.366	.398	.085				6
7	.284	.278	.292	.315		.349	.366	.064				7
8	.279	.257	.253	.285		.320	.367	.055				8
9	.276	.239	.258	.284		.327	.369	.040				9
10	.255	.248		.306		.333	.364	.025				10
11	.261	.258		.310		.338						11
12	.267	.262		.319		.344	.367	-.035				12
13	.259	.270	.308	.309		.340	.350	-.054				13
14	.257	.267	.279	.290		.320	.325	-.169				14
15	.265	.222	.224	.239		.238	.239	-.195				15
16	.134	.062	.090	.162		.193	.227	-.038				16
17	-.027	-.005	-.073	.074								17
18	.073	.051	.091	.149		.149	.096	-.150				18
19	.301	.359	.361	.349	.303	.080	.076	-.176				19
20	.291	.391	.437	.288	.319	.153	.054	-.181				20
21	.347	.387	.439	.243	.108	.205	.045	-.169				21
22	.184	.320	.346	.122	-.021	.209	.096	-.143				22
					$\alpha = -12$		$\delta = -5.0$					
1	.720	.692	.719	.624		.104	.627	.160				1
2	.431	.478	.513	.516		.561	.576	.332				2
3	.348	.399	.432	.497		.468	.520	.272				3
4	.341	.340	.392	.417		.448	.453	.177				4
5	.316	.321	.348	.385		.402	.430	.121				5
6	.292	.300	.322	.347		.367	.402	.083				6
7	.282	.279	.298	.314		.352	.372	.066				7
8	.278	.257	.258	.284		.322	.372	.058				8
9	.274	.241	.258	.288		.330	.374	.043				9
10	.257	.248		.308		.337	.366	.028				10
11	.260	.258		.318		.340						11
12	.268	.265		.323		.346	.370	-.039				12
13	.258	.273	.309	.315		.340	.355	-.050				13
14	.259	.270	.284	.296		.320	.330	-.169				14
15	.262	.223	.229	.242		.239	.242	-.192				15
16	.123	.007	.044	.020		.192	.213	-.034				16
17	-.031	.009	-.007	-.016								17
18	.229	.118	.106	.166		.149	.103	-.145				18
19	.225	.232	.231	.224	.188	.077	.078	-.172				19
20	.193	.224	.234	.149	.169	.065	.057	-.177				20
21	.232	.222	.242	.153	.143	.103	.043	-.166				21
22	.121	.192	.207	.085	-.023	.137	.049	-.138				22
					$\alpha = -12$		$\delta = 0.0$					
1	.721	.694	.723	.625		.103	.625	.158				1
2	.435	.484	.517	.518		.560	.573	.329				2
3	.351	.402	.436	.497		.473	.520	.276				3
4	.341	.345	.393	.420		.448	.458	.172				4
5	.316	.321	.349	.388		.403	.431	.117				5
6	.293	.301	.329	.344		.373	.402	.086				6
7	.283	.284	.304	.318		.350	.370	.065				7
8	.281	.262	.260	.288		.321	.372	.061				8
9	.281	.245	.261	.288		.330	.375	.044				9
10	.258	.253		.305		.333	.370	.027				10
11	.264	.263		.312		.339						11
12	.271	.269		.321		.343	.370	-.035				12
13	.262	.275	.310	.315		.344	.350	-.050				13
14	.261	.272	.286	.299		.322	.330	-.166				14
15	.265	.227	.228	.241		.241	.240	-.193				15
16	.125	.004	.035	.007		.193	.212	-.034				16
17	-.017	.027	-.002	-.007								17
18	.232	.222	.231	.038		.149	.102	-.150				18
19	.134	.078	.079	.139	.120	.078	.077	-.174				19
20	.112	.067	.070	.062	.045	.071	.055	-.178				20
21	.123	.097	.077	.167	.107	.079	.045	-.169				21
22	.064	.101	.077	.064	.065	.085	.045	-.142				22

Table 24 Continued

Pressure coefficients on swept wing

Configuration 46 M= 1.61 R= 3.6 x 10^6

Orif	Station 1	2	3	4	24	5	6	7	8	9	10	Orif
					α= -12		δ= 5.0					
1	.725	.695	.720	.621		.100	.624	.153				1
2	.436	.484	.515	.517		.559	.575	.330				2
3	.350	.404	.434	.493		.472	.520	.272				3
4	.345	.344	.388	.422		.446	.457	.176				4
5	.321	.322	.348	.387		.407	.431	.115				5
6	.295	.299	.324	.350		.367	.403	.087				6
7	.289	.283	.292	.319		.350	.370	.066				7
8	.283	.263	.255	.285		.321	.372	.059				8
9	.278	.243	.260	.290		.329	.377	.043				9
10	.258	.250		.309		.334	.372	.028				10
11	.265	.262		.315		.340						11
12	.270	.266		.322		.344	.370	-.035				12
13	.261	.272	.311	.314		.342	.354	-.048				13
14	.260	.270	.282	.296		.324	.329	-.166				14
15	.266	.276	.260	.277		.262	.243	-.193				15
16	.161	.347	.285	.323		.234	.211	-.035				16
17	-.073	-.069	-.131	-.171								17
18	.131	.096	.117	-.062		.185	.123	-.148				18
19	.078	-.054	-.033	.067	.092	.112	.090	-.169				19
20	.033	-.068	-.048	-.021	-.034	.092	.072	-.169				20
21	.043	.000	-.044	.102	.026	.078	.063	-.161				21
22	-.074	.023	-.043	-.074	-.029	.069	.063	-.135				22
					α= -12		δ= 10.0					
1	.720	.692	.716	.621		.099	.623	.152				1
2	.432	.483	.512	.517		.558	.573	.328				2
3	.347	.401	.435	.499		.471	.518	.274				3
4	.342	.341	.391	.420		.446	.455	.173				4
5	.318	.320	.345	.386		.407	.429	.115				5
6	.292	.300	.323	.347		.369	.403	.081				6
7	.283	.279	.296	.314		.350	.367	.073				7
8	.279	.257	.254	.287		.320	.372	.083				8
9	.276	.240	.259	.288		.327	.375	.065				9
10	.251	.249		.306		.334	.401	.048				10
11	.264	.259		.312		.347						11
12	.270	.265		.326		.402	.425	-.023				12
13	.262	.270	.313	.384		.436	.403	-.042				13
14	.259	.304	.436	.474		.411	.361	-.169				14
15	.277	.511	.525	.515		.317	.264	-.187				15
16	.333	.559	.559	.505		.270	.230	-.029				16
17	.322	.249	.038	-.061								17
18	.039	-.040	-.044	-.172		.189	.128	-.143				18
19	.013	-.171	-.158	-.107	.025	.110	.091	-.164				19
20	-.046	-.177	-.162	-.142	-.122	.081	.071	-.169				20
21	-.064	-.134	-.158	-.084	-.110	.060	.061	-.153				21
22	-.111	-.052	-.151	-.161	-.127	.042	.064	-.123				22
					α= -12		δ= 20.0					
1	.723	.691	.719	.621		.099	.622	.149				1
2	.434	.482	.516	.516		.558	.573	.358				2
3	.347	.403	.432	.496		.472	.521	.315				3
4	.343	.342	.391	.417		.446	.456	.222				4
5	.318	.321	.347	.386		.405	.432	.163				5
6	.294	.300	.325	.347		.369	.408	.135				6
7	.280	.279	.297	.315		.352	.445	.117				7
8	.282	.259	.257	.284		.323	.498	.106				8
9	.275	.242	.262	.288		.348	.509	.078				9
10	.258	.250		.308		.466	.489	.058				10
11	.262	.262		.369		.519						11
12	.268	.268		.517		.512	.445	-.020				12
13	.259	.292	.519	.584		.481	.410	-.038				13
14	.260	.544	.616	.616		.428	.363	-.169				14
15	.484	.634	.658	.608		.317	.272	-.181				15
16	.556	.644	.662	.459		.276	.237	-.023				16
17	.944	.667	.723	.654								17
18	-.099	-.244	-.254	-.318		.183	.124	-.137				18
19	-.184	-.329	-.321	-.325	-.028	.095	.089	-.150				19
20	-.177	-.330	-.318	-.311	-.256	.064	.071	-.147				20
21	-.211	-.306	-.314	-.303	-.257	.041	.061	-.135				21
22	-.200	-.120	-.289	-.290	-.217	.019	.085	-.107				22

Table 24 Continued

Pressure coefficients on swept wing

Configuration 46 M = 1.61 R = 3.6 x 10^6

Orif	Station 1	2	3	4	24	5	6	7	8	9	10	Orif
					α = -12		δ = 30.0					
1	.720	.693	.721	.622		.097	.619	.077				1
2	.431	.481	.512	.517		.561	.573	.391				2
3	.348	.402	.437	.501		.475	.518	.338				3
4	.341	.340	.390	.420		.446	.455	.237				4
5	.319	.321	.347	.386		.409	.445	.172				5
6	.291	.301	.326	.347		.373	.531	.148				6
7	.283	.277	.302	.316		.353	.534	.124				7
8	.282	.258	.259	.289		.335	.534	.108				8
9	.276	.242	.263	.291		.492	.531	.078				9
10	.256	.251		.333		.545	.495	.056				10
11	.262	.257		.516		.555						11
12	.268	.268		.598		.538	.445	-.020				12
13	.260	.377	.601	.635		.498	.411	-.035				13
14	.259	.614	.665	.661		.433	.358	-.166				14
15	.530	.672	.688	.646		.317	.267	-.169				15
16	.516	.645	.646	.453		.278	.236	-.013				16
17	1.606	1.185	1.064	.894								17
18	-.037	-.371	-.379	-.404		.181	.116	-.127				18
19	-.354	-.416	-.415	-.417	-.077	.088	.085	-.145				19
20	-.305	-.415	-.410	-.400	-.320	.050	.072	-.146				20
21	-.304	-.394	-.407	-.375	-.321	.032	.077	-.137				21
22	-.326	-.242	-.299	-.349	-.254	.002	.090	-.116				22
					α = - 9		δ = 0.0					
1	.784	.715	.751	.684		.305	.702	.431				1
2	.315	.399	.442	.450		.474	.495	.270				2
3	.275	.316	.347	.416		.373	.431	.186				3
4	.269	.264	.309	.335		.361	.366	.093				4
5	.248	.245	.270	.303		.328	.343	.039				5
6	.225	.229	.252	.274		.296	.304	.006				6
7	.217	.213	.234	.247		.271	.262	-.011				7
8	.206	.189	.188	.209		.223	.248	-.023				8
9	.209	.172	.185	.194		.219	.251	-.033				9
10	.187	.180		.209		.222	.244	-.048				10
11	.193	.191		.213		.230						11
12	.203	.197		.224		.236	.253	-.078				12
13	.193	.197	.218	.222		.237	.250	-.092				13
14	.191	.191	.202	.206		.233	.241	-.148				14
15	.184	.150	.156	.165		.164	.178	-.208				15
16	.076	.044	.030	.069		.128	.162	-.056				16
17	.007	.060	.048	.021								17
18	.146	.138	.158	.029		.089	.042	-.169				18
19	.070	.027	.026	.078	.060	.022	.019	-.187				19
20	.057	.012	.021	.018	-.020	.012	.002	-.193				20
21	.046	.041	.027	.087	-.001	.014	-.011	-.185				21
22	.009	.046	.025	.005	-.022	.023	-.009	-.167				22
					α = 6		δ = -30.0					
1	.804	.715	.744	.708		.525	.722	.698				1
2	.242	.319	.351	.375		.384	.395	.203				2
3	.203	.222	.248	.310		.253	.317	.097				3
4	.195	.186	.218	.239		.264	.270	.037				4
5	.175	.162	.183	.209		.232	.249	-.011				5
6	.154	.150	.170	.187		.214	.219	-.027				6
7	.148	.143	.159	.167		.185	.191	-.045				7
8	.136	.118	.118	.135		.145	.165	-.059				8
9	.139	.102	.107	.117		.131	.153	-.071				9
10	.119	.111		.121		.130	.147	-.085				10
11	.124	.120		.126		.132						11
12	.133	.127		.135		.156	.163	-.078				12
13	.125	.129	.137	.180		.273	.205	-.102				13
14	.125	.122	.175	.432		.319	.249	-.104				14
15	.127	.274	.394	.496		.299	.238	-.198				15
16	.171	.378	.429	.453		.283	.239	-.042				16
17	.573	.378	.066	-.233								17
18	.195	.363	.395	.554		.242	.063	-.143				18
19	.224	.384	.472	.660	.230	.237	.075	-.174				19
20	.370	.574	.706	.390	-.225	.221	.111	-.171				20
21	.526	.795	.944	.533	-.320	.194	.120	-.164				21
22	.466	.581	.639	.248	-.300	.106	.106	-.121				22

Table 24 Continued

Pressure coefficients on swept wing

Configuration 46 M=1.61 R=3.6 x 10^6

Orif	Station 1	2	3	4	24	5	6	7	8	9	10	Orif
					α=- 6		δ= -20.0					
1	.801	.715	.740	.707		.516	.722	.690				1
2	.243	.322	.353	.375		.382	.395	.209				2
3	.204	.221	.247	.311		.254	.323	.104				3
4	.196	.185	.220	.236		.264	.276	.046				4
5	.175	.166	.182	.208		.234	.252	-.007				5
6	.156	.150	.167	.186		.214	.222	-.021				6
7	.148	.143	.155	.169		.190	.197	-.040				7
8	.136	.119	.115	.138		.149	.169	-.055				8
9	.141	.105	.106	.115		.136	.159	-.065				9
10	.120	.109		.125		.135	.154	-.080				10
11	.123	.120		.128		.139						11
12	.133	.125		.137		.146	.159	-.079				12
13	.125	.129	.135	.137		.151	.156	-.104				13
14	.125	.123	.130	.132		.153	.155	-.112				14
15	.117	.092	.106	.164		.103	.126	-.217				15
16	.087	.175	.200	.303		.101	.142	-.068				16
17	.382	.153	.102	-.046								17
18	.099	.172	.215	.262		.038	-.013	-.164				18
19	.128	.236	.277	.341	.184	.035	-.036	-.191				19
20	.245	.403	.469	.263	-.094	.089	-.048	-.190				20
21	.298	.469	.560	.292	-.209	.125	-.056	-.182				21
22	.240	.363	.424	.119	-.198	.115	-.006	-.169				22
					α=- 6		δ= -10.0					
1	.805	.717	.744	.709		.511	.720	.686				1
2	.243	.322	.355	.377		.387	.395	.210				2
3	.203	.224	.252	.314		.256	.324	.106				3
4	.196	.189	.219	.238		.267	.277	.043				4
5	.177	.166	.182	.210		.235	.252	-.008				5
6	.155	.153	.171	.189		.217	.219	-.022				6
7	.149	.145	.161	.173		.191	.191	-.040				7
8	.138	.119	.118	.138		.148	.167	-.059				8
9	.140	.104	.106	.117		.136	.161	-.069				9
10	.122	.110		.126		.136	.153	-.082				10
11	.127	.120		.130		.140						11
12	.134	.125		.140		.145	.161	-.088				12
13	.127	.131	.141	.142		.149	.155	-.104				13
14	.127	.125	.132	.134		.151	.155	-.114				14
15	.118	.088	.093	.105		.099	.113	-.217				15
16	.036	.033	.023	.070		.069	.105	-.066				16
17	.020	.064	.051	.074								17
18	.011	.035	.049	.061		.029	-.008	-.168				18
19	.116	.146	.146	.120	.099	-.033	-.036	-.190				19
20	.123	.187	.201	.082	.092	-.037	-.049	-.193				20
21	.159	.188	.216	.074	-.009	-.027	-.060	-.185				21
22	.040	.145	.168	.005	-.109	.015	-.056	-.170				22
					α=- 6		δ= - 5.0					
1	.800	.721	.748	.715		.516	.729	.689				1
2	.245	.329	.358	.386		.392	.403	.217				2
3	.206	.226	.255	.315		.258	.328	.112				3
4	.200	.191	.221	.242		.273	.280	.052				4
5	.181	.168	.186	.215		.241	.261	-.002				5
6	.161	.155	.172	.192		.219	.226	-.019				6
7	.152	.149	.162	.174		.193	.197	-.040				7
8	.137	.124	.121	.142		.158	.174	-.053				8
9	.145	.106	.112	.120		.139	.161	-.064				9
10	.126	.116		.129		.144	.155	-.080				10
11	.132	.125		.134		.146						11
12	.137	.134		.143		.154	.164					12
13	.132	.137	.146	.141		.158	.161	-.103				13
14	.131	.129	.137	.140		.160	.162	-.113				14
15	.120	.096	.103	.106		.102	.116	-.212				15
16	.032	.015	.017	.071		.081	.109	-.065				16
17	-.014	.035	.024	.077								17
18	.041	.017	.034	.042		.037	-.004	-.167				18
19	.076	.065	.065	.042	.035	-.021	-.030	-.186				19
20	.057	.064	.058	-.006	-.006	-.035	-.045	-.188				20
21	.069	.062	.063	.000	.007	-.032	-.060	-.182				21
22	-.004	.051	.053	-.040	-.114	-.016	-.050	-.167				22

Table 24 Continued

Pressure coefficients on swept wing

Configuration 46 M=1.61 R=3.6 x 10^6

Orif	Station 1	2	3	4	24	5	6	7	8	9	10	Orif
					α=- 6		δ= 0.0					
1	.806	.718	.749	.716		.521	.725	.689				1
2	.247	.322	.352	.380		.389	.403	.209				2
3	.199	.220	.248	.314		.252	.326	.102				3
4	.197	.182	.216	.243		.266	.273	.046				4
5	.177	.168	.186	.208		.235	.258	-.002				5
6	.155	.153	.167	.189		.213	.225	-.019				6
7	.146	.147	.158	.172		.189	.198	-.036				7
8	.136	.120	.114	.136		.151	.169	-.052				8
9	.140	.099	.108	.115		.133	.161	-.063				9
10	.121	.114		.123		.132	.146	-.080				10
11	.125	.120		.129		.137						11
12	.133	.127		.140		.147	.157	-.081				12
13	.125	.130	.142	.137		.147	.157	-.107				13
14	.127	.125	.132	.133		.151	.157	-.094				14
15	.117	.085	.095	.100		.098	.116	-.196				15
16	.051	.078	.075	.120		.082	.117	-.053				16
17	.059	.091	.110	.132								17
18	.075	.059	.069	-.004		.034	-.011	-.172				18
19	-.001	-.042	-.046	-.038	-.007	-.031	-.040	-.187				19
20	-.004	-.063	-.065	-.077	-.084	-.041	-.057	-.185				20
21	-.035	-.049	-.064	.006	-.043	-.037	-.071	-.189				21
22	-.055	-.037	-.062	-.073	-.066	-.035	-.058	-.175				22
					α=- 6		δ= 5.0					
1	.805	.719	.751	.719		.517	.731	.689				1
2	.243	.326	.357	.383		.393	.410	.217				2
3	.206	.227	.252	.318		.262	.333	.110				3
4	.200	.192	.223	.247		.276	.286	.045				4
5	.182	.167	.189	.215		.239	.264	.001				5
6	.155	.157	.174	.195		.220	.233	-.014				6
7	.153	.147	.162	.176		.197	.201	-.035				7
8	.140	.125	.122	.146		.159	.177	-.049				8
9	.143	.106	.109	.121		.142	.163	-.061				9
10	.124	.115		.132		.141	.160	-.076				10
11	.131	.124		.135		.146						11
12	.135	.130		.146		.154	.170	-.074				12
13	.130	.133	.145	.148		.155	.164	-.104				13
14	.131	.127	.135	.135		.159	.165	-.109				14
15	.120	.117	.118	.115		.108	.120	-.209				15
16	.065	.231	.192	.220		.091	.121	-.061				16
17	.048	.068	.078	.050								17
18	.039	.009	.022	-.069		.039	-.009	-.168				18
19	-.032	-.116	-.106	-.075	-.031	-.017	-.033	-.188				19
20	-.054	-.137	-.123	-.118	-.120	-.007	-.049	-.191				20
21	-.082	-.125	-.124	-.037	-.085	-.015	-.056	-.187				21
22	-.105	-.078	-.124	-.114	-.112	-.028	-.047	-.171				22
					α=- 6		δ= 10.0					
1	.813	.720	.747	.715		.518	.722	.682				1
2	.250	.328	.356	.378		.397	.398	.210				2
3	.205	.227	.255	.317		.262	.331	.106				3
4	.202	.189	.224	.249		.276	.278	.049				4
5	.183	.169	.188	.220		.241	.255	-.007				5
6	.161	.161	.173	.193		.222	.227	-.026				6
7	.153	.147	.163	.174		.199	.195	-.043				7
8	.140	.126	.122	.148		.154	.170	-.057				8
9	.145	.106	.108	.118		.135	.163	-.069				9
10	.122	.116		.132		.138	.153	-.084				10
11	.130	.126		.138		.143						11
12	.139	.132		.145		.151	.164	-.089				12
13	.130	.134	.145	.148		.155	.158	-.103				13
14	.129	.131	.205	.219		.168	.161	-.111				14
15	.125	.351	.372	.348		.148	.115	-.212				15
16	.184	.407	.407	.369		.152	.116	-.062				16
17	.206	.226	.177	.120								17
18	-.016	-.095	-.078	-.161		.091	-.003	-.164				18
19	-.082	-.219	-.201	-.183	-.093	.023	-.018	-.187				19
20	-.119	-.230	-.212	-.196	-.176	.007	-.016	-.185				20
21	-.151	-.217	-.213	-.169	-.166	-.013	-.031	-.184				21
22	-.120	-.102	-.210	-.182	-.167	-.040	-.027	-.165				22

Table 24 Continued

Pressure coefficients on swept wing

Configuration 46 M = 1.61 R = 3.6 x 10^6

Orif	Station 1	2	3	4	24	5	6	7	8	9	10	Orif
					α = − 6		δ = 20.0					
1	.814	.719	.751	.715		.514	.724	.679				1
2	.249	.330	.356	.383		.392	.403	.215				2
3	.205	.227	.250	.318		.261	.331	.114				3
4	.201	.191	.222	.243		.276	.283	.047				4
5	.179	.168	.189	.218		.241	.258	−.005				5
6	.161	.159	.172	.191		.219	.226	−.024				6
7	.152	.149	.160	.175		.199	.198	−.041				7
8	.141	.121	.121	.145		.160	.176	−.057				8
9	.142	.103	.113	.120		.138	.168	−.069				9
10	.123	.117		.131		.140	.157	−.085				10
11	.130	.125		.133		.144						11
12	.137	.130		.153		.173	.174	−.081				12
13	.130	.136	.223	.338		.265	.207	−.099				13
14	.128	.339	.432	.434		.294	.245	−.114				14
15	.256	.460	.473	.430		.228	.195	−.196				15
16	.360	.491	.489	.335		.211	.177	−.043				16
17	.614	.472	.513	.449								17
18	−.154	−.262	−.262	−.303		.117	.065	−.147				18
19	−.251	−.348	−.343	−.347	−.165	.045	.037	−.169				19
20	−.245	−.359	−.346	−.328	−.283	.009	.012	−.173				20
21	−.247	−.347	−.346	−.315	−.276	−.015	−.003	−.172				21
22	−.279	−.179	−.254	−.278	−.237	−.049	−.012	−.150				22
					α = − 6		δ = 30.0					
1	.813	.722	.748	.715		.514	.722	.675				1
2	.254	.326	.360	.386		.391	.403	.211				2
3	.205	.227	.257	.318		.260	.331	.109				3
4	.199	.193	.225	.251		.276	.283	.045				4
5	.182	.169	.191	.216		.244	.261	−.005				5
6	.161	.156	.177	.193		.220	.231	−.022				6
7	.152	.147	.162	.178		.196	.198	−.039				7
8	.140	.120	.120	.140		.157	.176	−.056				8
9	.146	.106	.113	.120		.139	.165	−.068				9
10	.127	.120		.134		.141	.156	−.081				10
11	.133	.127		.134		.162						11
12	.141	.131		.283		.287	.258	−.043				12
13	.130	.138	.371	.438		.339	.294	−.050				13
14	.133	.424	.472	.472		.326	.282	−.116				14
15	.281	.483	.496	.447		.249	.218	−.177				15
16	.342	.518	.488	.357		.232	.197	−.029				16
17	1.525	1.019	.910	.774								17
18	−.124	−.380	−.378	−.365		.125	.074	−.136				18
19	−.387	−.436	−.425	−.388	−.120	.047	.043	−.163				19
20	−.337	−.431	−.417	−.378	−.313	.009	.012	−.170				20
21	−.344	−.422	−.403	−.366	−.311	−.020	−.003	−.168				21
22	−.370	−.280	−.309	−.328	−.265	−.053	−.007	−.148				22
					α = − 3		δ = 0.0					
1	.837	.685	.731	.715		.677	.704	.826				1
2	.146	.156	.179	.216		.215	.206	.055				2
3	.099	.078	.070	.127		.064	.110	−.111				3
4	.096	.054	.082	.087		.092	.082	−.090				4
5	.080	.052	.062	.052		.069	.077	−.084				5
6	.062	.047	.041	.044		.055	.064	−.092				6
7	.047	.040	.031	.027		.043	.041	−.113				7
8	.053	.027	−.001	.002		.016	.003	−.135				8
9	.044	.007	−.007	−.013		−.004	−.002	−.123				9
10	.045	.015		−.021		−.014	−.020	−.150				10
11	.035	.022		−.009		−.007						11
12	.040	.027		.004		.000	−.013	−.151				12
13	.044	.033	.023	.010		−.009	−.001	−.169				13
14	.039	.026	.027	−.001		.013	.006	−.045				14
15	.024	−.002	.003	−.001		−.028	−.028	−.206				15
16	.006	.052	.073	.149		−.042	.014	−.023				16
17	.084	.139	.167	.222								17
18	.028	−.046	−.041	−.049		−.088	−.148	−.259				18
19	−.080	−.126	−.142	−.229	−.184	−.157	−.183	−.235				19
20	−.068	−.139	−.155	−.192	−.215	−.168	−.193	−.224				20
21	−.121	−.134	−.154	−.120	−.141	−.140	−.191	−.251				21
22	−.101	−.093	−.130	−.147	−.160	−.133	−.155	−.239				22

Table 24 Continued

Pressure coefficients on swept wing

Configuration 46 M= 1.61 R= 3.6 x 10^6

Orif	Station 1	2	3	4	24	5	6	7	8	9	10	Orif
					α= 0		δ= -30.0					
1	.865	.833	.729	.699		.729	.642	.865				1
2	.112	.095	.125	.153		.179	.169	.087				2
3	.059	.038	.053	.163		.073	.075	-.021				3
4	.063	.023	.025	.028		.029	.040	.000				4
5	.044	.009	.009	.014		.014	.029	.005				5
6	.025	.006	.003	.001		.009	.007	-.012				6
7	.017	.007	-.006	-.011		-.001	-.001	.001				7
8	.013	-.011	-.027	-.024		-.023	-.016	-.023				8
9	.008	-.028	-.034	-.041		-.040	-.021	-.009				9
10	.003	-.020		-.032		-.039	-.033	-.035				10
11	.000	-.009		-.035		-.032						11
12	.008	-.002		-.006		.001	-.029	-.059				12
13	-.008	.004	.042	.224		.090	-.026	-.050				13
14	.000	.021	.268	.265		.115	-.021	.039				14
15	-.006	.290	.303	.286		.080	-.005	-.045				15
16	.072	.331	.314	.248		.070	.022	.064				16
17	1.371	.785	.531	.331								17
18	.077	.252	.304	.314		.029	-.108	-.101				18
19	.174	.271	.317	.252	.065	.007	-.127	-.126				19
20	.213	.327	.341	.084	-.194	-.011	-.123	-.149				20
21	.346	.415	.396	.129	-.321	-.022	-.111	-.155				21
22	.303	.365	.353	.076	-.276	.001	-.030	-.146				22
					α= 0		δ= -20.0					
1	.865	.832	.731	.706		.729	.645	.863				1
2	.112	.095	.127	.157		.181	.174	.090				2
3	.063	.043	.051	.164		.074	.078	-.028				3
4	.062	.018	.028	.034		.033	.045	.000				4
5	.046	.016	.014	.021		.018	.032	.005				5
6	.028	.003	.007	.002		.013	.015	-.007				6
7	.022	.007	-.004	-.005		.005	.001	.002				7
8	.017	-.006	-.022	-.021		-.023	-.016	-.022				8
9	.015	-.022	-.029	-.036		-.039	-.016	-.011				9
10	.005	-.018		-.031		-.034	-.030	-.032				10
11	.008	-.008		-.028		-.032						11
12	.010	.001		-.022		-.023	-.023	-.054				12
13	.002	.008	-.007	-.021		-.027	-.023	-.044				13
14	.005	.002	-.006	-.022		-.016	-.025	.052				14
15	-.005	-.026	.039	.106		-.051	-.035	-.042				15
16	.011	.097	.160	.217		-.042	.000	.063				16
17	.494	.284	.271	.188								17
18	.022	.108	.168	.192		-.099	-.138	-.102				18
19	.052	.149	.182	.125	.039	-.138	-.163	-.121				19
20	.097	.221	.241	.035	-.136	-.099	-.173	-.146				20
21	.120	.268	.282	.074	-.256	-.077	-.170	-.155				21
22	.092	.205	.217	-.007	-.228	-.031	-.148	-.145				22
					α= 0		δ= -10.0					
1	.869	.830	.727	.705		.727	.646	.867				1
2	.115	.100	.127	.159		.184	.174	.088				2
3	.064	.037	.050	.162		.076	.079	-.024				3
4	.059	.023	.029	.031		.031	.045	.000				4
5	.044	.010	.012	.018		.016	.033	.006				5
6	.027	.009	.006	-.001		.011	.015	-.014				6
7	.023	.007	-.002	-.003		.006	.004	-.003				7
8	.014	-.007	-.027	-.023		-.021	-.014	-.021				8
9	.014	-.031	-.027	-.032		-.034	-.017	-.009				9
10	.005	-.018		-.028		-.031	-.032	-.038				10
11	.007	-.007		-.030		-.026						11
12	.009	.002		-.021		-.024	-.023	-.050				12
13	.001	.007	-.007	-.021		-.023	-.026	-.035				13
14	.007	.000	.001	-.014		-.016	-.021	.069				14
15	-.006	-.029	-.028	-.026		-.050	-.036	-.034				15
16	-.042	-.036	-.032	.073		-.054	-.010	.069				16
17	.041	.102	.003	-.031								17
18	-.057	-.033	-.014	.020		-.097	-.141	-.094				18
19	-.032	.015	.014	-.068	-.098	-.149	-.158	-.112				19
20	.008	.044	.038	-.078	-.077	-.154	-.173	-.140				20
21	-.008	.035	.053	-.064	-.113	-.144	-.169	-.146				21
22	-.074	.005	.018	-.110	-.163	-.107	-.151	-.139				22

Table24 Continued

Pressure coefficients on swept wing

Configuration46 M=1.61 R=3.6 x 10^6

Orif	Station 1	2	3	4	24	5	6	7	8	9	10	Orif
					α= 0		δ= - 5.0					
1	.866	.831	.729	.699		.725	.645	.867				1
2	.115	.098	.130	.163		.182	.177	.090				2
3	.063	.042	.052	.166		.078	.079	-.022				3
4	.063	.025	.029	.034		.035	.045	.002				4
5	.047	.012	.014	.016		.022	.035	.011				5
6	.031	.008	.008	.003		.015	.014	-.007				6
7	.020	.007	.001	-.004		.005	.004	.002				7
8	.014	-.007	-.020	-.021		-.020	-.009	-.020				8
9	.013	-.025	-.027	-.036		-.035	-.015	-.007				9
10	.007	-.016		-.027		-.031	-.028	-.033				10
11	.006	-.007		-.026		-.026						11
12	.010	.001		-.017		-.021	-.023	-.050				12
13	-.001	.007	-.005	-.009		-.021	-.024	-.043				13
14	.007	.014	.010	.001		-.011	-.021	.054				14
15	.000	-.010	-.007	-.001		-.047	-.031	-.041				15
16	-.022	.001	.022	.114		-.037	-.003	.064				16
17	.000	.042	.016	.061								17
18	-.040	-.080	-.054	-.051		-.092	-.138	-.101				18
19	-.096	-.116	-.115	-.191	-.170	-.143	-.163	-.117				19
20	-.087	-.118	-.127	-.172	-.175	-.136	-.163	-.142				20
21	-.117	-.134	-.119	-.138	-.146	-.131	-.163	-.148				21
22	-.138	-.109	-.111	-.163	-.173	-.125	-.136	-.142				22
					α= 0		δ= 5.0					
1	.863	.831	.729	.701		.723	.648	.870				1
2	.111	.093	.126	.162		.180	.179	.089				2
3	.064	.035	.049	.163		.073	.080	-.023				3
4	.060	.021	.026	.031		.034	.050	.002				4
5	.039	.009	.013	.019		.020	.035	.009				5
6	.027	.005	.007	.001		.011	.014	-.008				6
7	.019	.004	-.002	-.006		.004	.004	.004				7
8	.009	-.011	-.022	-.021		-.017	-.008	-.021				8
9	.010	-.027	-.028	-.037		-.035	-.014	-.006				9
10	.004	-.021		-.030		-.030	-.027	-.036				10
11	.006	-.010		-.028		-.021						11
12	.009	-.002		-.019		-.020	-.019	-.063				12
13	-.001	-.001	-.010	-.018		-.020	-.020	-.046				13
14	.002	-.002	-.004	-.017		-.013	-.023	.039				14
15	.000	.058	.095	.123		-.046	-.024	-.039				15
16	.057	.186	.201	.199		-.035	.016	.067				16
17	.163	.229	.262	.291								17
18	.007	-.105	-.101	-.054		-.092	-.137	-.098				18
19	-.136	-.207	-.204	-.252	-.205	-.145	-.165	-.115				19
20	-.129	-.221	-.219	-.224	-.227	-.135	-.170	-.138				20
21	-.177	-.212	-.215	-.197	-.215	-.120	-.167	-.146				21
22	-.118	-.117	-.207	-.177	-.182	-.124	-.147	-.140				22
					α=		δ=					

Table 24 Continued

Pressure coefficients on swept wing

Configuration 46 M = 1.61 R = 3.6 x 10^6

Orif	Station 1	2	3	4	24	5	6	7	8	9	10	Orif
					α = 0		δ = 10.0					
1	.865	.830	.726	.705		.728	.647	.868				1
2	.111	.096	.126	.163		.185	.177	.084				2
3	.063	.040	.053	.164		.078	.085	-.025				3
4	.063	.025	.028	.033		.038	.044	.001				4
5	.044	.010	.012	.018		.021	.032	.006				5
6	.030	.008	.007	.003		.015	.015	-.010				6
7	.020	.010	-.005	-.003		.003	.003	-.003				7
8	.014	-.008	-.021	-.020		-.017	-.005	-.024				8
9	.010	-.025	-.028	-.034		-.033	-.015	-.008				9
10	.007	-.016		-.026		-.030	-.032	-.035				10
11	.005	-.008		-.028		-.026						11
12	.012	.001		-.019		-.021	-.023	-.065				12
13	-.001	.003	-.005	-.018		-.021	-.023	-.047				13
14	.006	.003	.061	.043		-.016	-.022	.038				14
15	.007	.216	.234	.211		-.045	-.024	-.041				15
16	.093	.262	.262	.206		-.028	.013	.066				16
17	.186	.264	.272	.239								17
18	-.042	-.165	-.161	-.096		-.082	-.136	-.101				18
19	-.177	-.271	-.264	-.284	-.225	-.121	-.168	-.117				19
20	-.190	-.287	-.276	-.256	-.253	-.112	-.169	-.137				20
21	-.233	-.276	-.275	-.264	-.248	-.111	-.171	-.148				21
22	-.196	-.119	-.224	-.199	-.205	-.123	-.146	-.143				22
					α = 0		δ = 20.0					
1	.867	.832	.728	.707		.727	.650	.872				1
2	.113	.098	.130	.163		.188	.180	.091				2
3	.064	.044	.054	.168		.074	.084	-.022				3
4	.066	.023	.031	.040		.035	.050	.001				4
5	.046	.010	.013	.021		.021	.039	.009				5
6	.032	.010	.007	.002		.017	.020	-.007				6
7	.021	.009	-.002	-.001		.007	.007	.003				7
8	.017	-.007	-.020	-.017		-.016	-.007	-.020				8
9	.013	-.023	-.027	-.032		-.032	-.009	-.007				9
10	.010	-.015		-.025		-.031	-.025	-.032				10
11	.008	-.007		-.027		-.025						11
12	.014	.002		-.019		-.019	-.017	-.058				12
13	.004	.007	.016	.082		-.015	-.017	-.048				13
14	.009	.169	.259	.242		.017	-.019	.039				14
15	.077	.297	.289	.244		.021	-.020	-.040				15
16	.216	.348	.305	.187		.036	.021	.066				16
17	.437	.317	.315	.244								17
18	-.212	-.296	-.289	-.248		-.032	-.133	-.100				18
19	-.290	-.379	-.370	-.375	-.270	-.077	-.163	-.114				19
20	-.316	-.393	-.382	-.364	-.324	-.072	-.159	-.135				20
21	-.287	-.382	-.379	-.355	-.312	-.091	-.152	-.144				21
22	-.347	-.227	-.237	-.287	-.264	-.118	-.092	-.138				22
					α = 0		δ = 30.0					
1	.862	.830	.731	.703		.732	.651	.873				1
2	.114	.095	.132	.163		.188	.180	.092				2
3	.064	.042	.054	.168		.083	.086	-.025				3
4	.065	.028	.031	.035		.040	.050	.000				4
5	.046	.014	.014	.020		.027	.038	.006				5
6	.031	.010	.007	.005		.021	.021	-.008				6
7	.023	.010	-.001	-.001		.010	.008	-.002				7
8	.015	-.006	-.020	-.017		-.017	-.003	-.019				8
9	.013	-.023	-.025	-.031		-.032	-.013	-.008				9
10	.010	-.014		-.025		-.029	-.024	-.034				10
11	.007	-.007		-.021		-.025						11
12	.008	.004		-.006		-.016	-.013	-.058				12
13	.005	.007	.156	.225		.016	-.016	-.049				13
14	.006	.243	.289	.268		.075	-.015	.036				14
15	.087	.310	.292	.238		.054	-.017	-.039				15
16	.206	.385	.344	.276		.058	.023	.068				16
17	1.408	.828	.620	.461								17
18	-.197	-.383	-.373	-.318		-.022	-.129	-.099				18
19	-.391	-.435	-.398	-.352	-.233	-.041	-.149	-.112				19
20	-.374	-.440	-.390	-.362	-.303	-.061	-.127	-.133				20
21	-.368	-.423	-.377	-.348	-.318	-.083	-.114	-.144				21
22	-.393	-.313	-.315	-.304	-.259	-.110	-.039	-.138				22

Table24 Continued

Pressure coefficients on swept wing

Configuration46 M=1.61 R=3.6 x 10^6

Orif	Station 1	2	3	4	24	5	6	7	8	9	10	Orif
					α= 3		δ= 0.0					
1	.886	.825	.738	.650		.756	.488	.859				1
2	.062	-.007	-.004	-.011		.004	.002	-.003				2
3	-.003	-.017	-.029	.054		-.006	-.008	-.016				3
4	.014	-.032	-.046	-.046		-.032	-.025	-.046				4
5	-.001	-.047	-.052	-.048		-.045	-.038	-.036				5
6	-.014	-.044	-.063	-.070		-.062	-.059	-.050				6
7	-.024	-.045	-.066	-.064		-.074	-.071	-.044				7
8	-.035	-.052	-.080	-.081		-.092	-.079	-.062				8
9	-.035	-.070	-.081	-.100		-.100	-.085	-.056				9
10	-.037	-.063		-.088		-.097	-.096	-.073				10
11	-.040	-.054		-.088		-.093						11
12	-.042	-.045		-.075		-.085	-.086	-.123				12
13	-.043	-.040	-.056	-.078		-.086	-.091	-.100				13
14	-.036	-.043	-.055	-.068		-.083	-.092	-.019				14
15	-.041	-.069	-.068	-.036		-.111	-.088	-.091				15
16	-.031	.017	.054	.125		-.093	-.052	.014				16
17	.140	.142	.224	.317								17
18	.001	-.084	-.087	-.061		-.149	-.179	-.143				18
19	-.106	-.153	-.153	-.205	-.209	-.192	-.206	-.162				19
20	-.102	-.159	-.164	-.183	-.206	-.185	-.205	-.188				20
21	-.155	-.139	-.161	-.147	-.197	-.173	-.202	-.197				21
22	-.091	-.110	-.148	-.163	-.183	-.147	-.165	-.204				22
					α= 6		δ= -30.0					
1	.884	.706	.615	.529		.767	.289	.911				1
2	.002	-.147	-.159	-.172		-.175	-.180	-.144				2
3	-.086	-.134	-.149	-.139		-.158	-.163	-.134				3
4	-.051	-.116	-.168	-.174		-.175	-.183	-.166				4
5	-.065	-.125	-.177	-.174		-.180	-.179	-.177				5
6	-.078	-.118	-.176	-.185		-.183	-.190	-.163				6
7	-.082	-.110	-.150	-.192		-.187	-.198	-.178				7
8	-.096	-.123	-.163	-.203		-.203	-.204	-.214				8
9	-.096	-.136	-.165	-.215		-.214	-.205	-.262				9
10	-.097	-.125		-.204		-.210	-.210	-.304				10
11	-.105	-.120		-.192		-.180						11
12	-.106	-.113		.029		-.062	-.206	-.315				12
13	-.104	-.108	.044	.071		-.057	-.205	-.309				13
14	-.095	-.092	.143	.078		-.066	-.205	-.233				14
15	-.104	.174	.152	.086		-.094	-.195	-.286				15
16	-.050	.209	.172	.028		-.108	-.158	-.138				16
17	1.508	.971	.854	.714								17
18	-.156	.045	.092	.125		-.133	-.264	-.345				18
19	.037	.060	.078	.058	-.084	-.158	-.273	-.342				19
20	.095	.203	.154	-.080	-.272	-.176	-.241	-.347				20
21	.159	.290	.232	-.031	-.312	-.182	-.153	-.341				21
22	.201	.245	.193	-.071	-.274	-.119	-.071	-.353				22
					α= 6		δ= -20.0					
1	.884	.701	.617	.530		.762	.289	.908				1
2	.007	-.147	-.159	-.167		-.175	-.177	-.140				2
3	-.085	-.135	-.148	-.134		-.154	-.161	-.131				3
4	-.049	-.118	-.168	-.174		-.171	-.177	-.164				4
5	-.062	-.124	-.178	-.164		-.177	-.178	-.176				5
6	-.078	-.119	-.173	-.182		-.183	-.188	-.162				6
7	-.083	-.112	-.149	-.187		-.186	-.195	-.172				7
8	-.098	-.122	-.163	-.197		-.202	-.203	-.206				8
9	-.097	-.131	-.163	-.214		-.211	-.199	-.249				9
10	-.095	-.125		-.198		-.207	-.207	-.301				10
11	-.102	-.120		-.191		-.204						11
12	-.101	-.113		-.169		-.202	-.202	-.302				12
13	-.101	-.106	-.129	-.162		-.202	-.204	-.305				13
14	-.093	-.107	-.125	-.159		-.194	-.205	-.232				14
15	-.106	-.130	-.130	-.024		-.215	-.205	-.287				15
16	-.118	-.041	-.010	.067		-.208	-.168	-.135				16
17	.744	.474	.469	.354								17
18	-.111	-.064	-.026	.039		-.248	-.273	-.344				18
19	-.050	.071	.095	-.036	-.120	-.283	-.294	-.337				19
20	-.007	.100	.110	-.098	-.185	-.243	-.290	-.339				20
21	-.006	.133	.141	-.076	-.267	-.210	-.280	-.334				21
22	-.012	.089	.094	-.098	-.237	-.099	-.175	-.347				22

Table 24 Continued

Pressure coefficients on swept wing

Configuration 46 M= 1.61 R= 3.6 x 10^6

Orif	Station 1	2	3	4	24	5	6	7	8	9	10	Orif
					α= 6		δ= -10.0					
1	.888	.703	.618	.533		.769	.294	.904				1
2	.005	-.146	-.159	-.166		-.174	-.175	-.138				2
3	-.086	-.134	-.149	-.133		-.151	-.156	-.129				3
4	-.050	-.116	-.168	-.172		-.174	-.176	-.168				4
5	-.062	-.127	-.174	-.168		-.177	-.175	-.169				5
6	-.076	-.118	-.172	-.183		-.183	-.180	-.160				6
7	-.088	-.113	-.149	-.188		-.186	-.193	-.171				7
8	-.099	-.121	-.159	-.199		-.198	-.199	-.198				8
9	-.099	-.134	-.162	-.211		-.207	-.200	-.241				9
10	-.099	-.125		-.201		-.203	-.205	-.290				10
11	-.103	-.120		-.191		-.201						11
12	-.103	-.113		-.168		-.196	-.199	-.301				12
13	-.103	-.110	-.132	-.160		-.199	-.203	-.309				13
14	-.095	-.106	-.123	-.154		-.187	-.202	-.235				14
15	-.107	-.131	-.138	-.146		-.211	-.204	-.288				15
16	-.154	-.133	-.129	-.011		-.204	-.170	-.135				16
17	.220	.191	-.114	-.181								17
18	-.156	-.111	-.097	-.243		-.245	-.275	-.347				18
19	-.131	-.086	-.089	-.196	-.224	-.281	-.294	-.339				19
20	-.094	-.069	-.075	-.181	-.188	-.276	-.291	-.345				20
21	-.111	-.064	-.062	-.157	-.201	-.263	-.277	-.335				21
22	-.129	-.080	-.087	-.178	-.195	-.161	-.202	-.350				22
					α= 6		δ= - 5.0					
1	.885	.701	.617	.531		.766	.290	.900				1
2	.000	-.146	-.157	-.166		-.174	-.178	-.135				2
3	-.084	-.134	-.147	-.132		-.155	-.156	-.124				3
4	-.049	-.113	-.170	-.174		-.169	-.177	-.163				4
5	-.061	-.123	-.172	-.166		-.172	-.176	-.166				5
6	-.078	-.117	-.172	-.179		-.181	-.182	-.157				6
7	-.086	-.113	-.149	-.185		-.185	-.191	-.165				7
8	-.096	-.125	-.163	-.195		-.203	-.200	-.195				8
9	-.094	-.133	-.161	-.214		-.213	-.196	-.242				9
10	-.098	-.125		-.200		-.206	-.207	-.289				10
11	-.103	-.121		-.185		-.200						11
12	-.103	-.112		-.163		-.196	-.201	-.299				12
13	-.103	-.105	-.121	-.153		-.194	-.203	-.304				13
14	-.097	-.090	-.108	-.134		-.190	-.203	-.231				14
15	-.091	-.109	-.117	-.114		-.209	-.197	-.279				15
16	-.096	-.078	-.064	-.039		-.196	-.162	-.132				16
17	-.078	-.037	-.056	.017								17
18	-.127	-.157	-.143	-.247		-.237	-.270	-.341				18
19	-.179	-.193	-.210	-.284	-.292	-.271	-.289	-.330				19
20	-.175	-.203	-.207	-.263	-.262	-.266	-.284	-.337				20
21	-.192	-.212	-.205	-.239	-.239	-.254	-.274	-.330				21
22	-.154	-.138	-.173	-.212	-.212	-.182	-.192	-.344				22
					α= 6		δ= 0.0					
1	.892	.707	.630	.542		.771	.319	.904				1
2	.013	-.118	-.117	-.134		-.130	-.128	-.102				2
3	-.067	-.111	-.125	-.101		-.113	-.118	-.088				3
4	-.038	-.095	-.143	-.142		-.133	-.127	-.119				4
5	-.049	-.110	-.152	-.134		-.140	-.131	-.133				5
6	-.066	-.105	-.150	-.155		-.151	-.144	-.126				6
7	-.070	-.101	-.132	-.156		-.157	-.155	-.122				7
8	-.090	-.112	-.143	-.166		-.170	-.153	-.147				8
9	-.085	-.121	-.144	-.177		-.176	-.157	-.169				9
10	-.086	-.111		-.166		-.173	-.164	-.202				10
11	-.090	-.108		-.161		-.170						11
12	-.090	-.097		-.147		-.168	-.158	-.234				12
13	-.088	-.096	-.110	-.140		-.166	-.165	-.224				13
14	-.085	-.092	-.111	-.134		-.160	-.166	-.164				14
15	-.086	-.115	-.120	-.077		-.181	-.159	-.195				15
16	-.062	-.023	.007	.059		-.163	-.124	-.081				16
17	.134	.163	.288	.390								17
18	-.042	-.128	-.135	-.139		-.211	-.235	-.242				18
19	-.135	-.194	-.208	-.265	-.263	-.248	-.253	-.249				19
20	-.148	-.205	-.219	-.242	-.250	-.239	-.252	-.268				20
21	-.185	-.191	-.215	-.217	-.235	-.227	-.247	-.267				21
22	-.112	-.115	-.191	-.202	-.212	-.179	-.190	-.277				22

Table24 Continued

Pressure coefficients on swept wing

Configuration46 M=1.61 R=3.6 x 10^6

Orif	Station 1	2	3	4	24	5	6	7	8	9	10	Orif
					α= 6		δ= 5.0					
1	.884	.701	.622	.533		.765	.297	.900				1
2	.007	-.134	-.142	-.158		-.159	-.161	-.127				2
3	-.079	-.126	-.140	-.128		-.141	-.145	-.115				3
4	-.047	-.110	-.161	-.165		-.159	-.160	-.146				4
5	-.058	-.123	-.167	-.157		-.163	-.157	-.155				5
6	-.074	-.111	-.165	-.177		-.170	-.169	-.150				6
7	-.078	-.106	-.146	-.178		-.177	-.178	-.149				7
8	-.097	-.116	-.155	-.185		-.191	-.181	-.177				8
9	-.092	-.129	-.158	-.202		-.196	-.181	-.212				9
10	-.092	-.120		-.188		-.193	-.191	-.252				10
11	-.097	-.114		-.178		-.191						11
12	-.099	-.106		-.159		-.186	-.185	-.273				12
13	-.099	-.103	-.127	-.155		-.187	-.189	-.267				13
14	-.096	-.101	-.120	-.147		-.181	-.191	-.199				14
15	-.094	-.048	-.019	-.012		-.203	-.180	-.236				15
16	-.010	.064	.056	.065		-.184	-.142	-.107				16
17	.217	.355	.416	.448								17
18	-.038	-.170	-.179	-.187		-.234	-.254	-.282				18
19	-.169	-.248	-.254	-.298	-.279	-.271	-.273	-.290				19
20	-.189	-.262	-.263	-.271	-.272	-.259	-.274	-.301				20
21	-.230	-.245	-.263	-.276	-.268	-.246	-.264	-.296				21
22	-.162	-.106	-.196	-.211	-.234	-.183	-.201	-.307				22
					α= 6		δ= 10.0					
1	.890	.707	.620	.535		.767	.292	.897				1
2	.006	-.136	-.150	-.164		-.164	-.171	-.129				2
3	-.079	-.130	-.144	-.130		-.149	-.152	-.120				3
4	-.048	-.108	-.161	-.166		-.163	-.170	-.156				4
5	-.059	-.122	-.172	-.161		-.169	-.170	-.160				5
6	-.075	-.111	-.168	-.176		-.172	-.177	-.150				6
7	-.084	-.106	-.144	-.183		-.179	-.189	-.161				7
8	-.099	-.119	-.154	-.191		-.194	-.196	-.188				8
9	-.093	-.129	-.161	-.203		-.208	-.191	-.222				9
10	-.093	-.120		-.191		-.204	-.201	-.269				10
11	-.098	-.114		-.184		-.202						11
12	-.099	-.106		-.164		-.198	-.189	-.288				12
13	-.099	-.103	-.124	-.154		-.197	-.200	-.289				13
14	-.092	-.101	-.065	-.095		-.191	-.197	-.218				14
15	-.080	.089	.086	.050		-.212	-.188	-.254				15
16	.067	.130	.117	.051		-.191	-.150	-.120				16
17	.103	.121	.109	.207								17
18	-.055	-.215	-.229	-.221		-.236	-.262	-.302				18
19	-.217	-.300	-.304	-.319	-.306	-.275	-.279	-.307				19
20	-.234	-.314	-.314	-.304	-.299	-.258	-.288	-.320				20
21	-.280	-.298	-.308	-.315	-.290	-.243	-.274	-.314				21
22	-.243	-.149	-.195	-.230	-.250	-.181	-.204	-.324				22
					α= 6		δ= 20.0					
1	.885	.708	.625	.535		.766	.297	.900				1
2	.007	-.141	-.156	-.163		-.168	-.170	-.128				2
3	-.084	-.134	-.148	-.133		-.151	-.153	-.119				3
4	-.047	-.111	-.165	-.165		-.163	-.170	-.161				4
5	-.062	-.123	-.174	-.163		-.170	-.168	-.157				5
6	-.075	-.116	-.171	-.177		-.176	-.176	-.149				6
7	-.084	-.110	-.148	-.184		-.181	-.186	-.157				7
8	-.098	-.120	-.159	-.196		-.197	-.195	-.188				8
9	-.093	-.132	-.158	-.210		-.208	-.191	-.234				9
10	-.092	-.122		-.195		-.202	-.202	-.280				10
11	-.100	-.119		-.189		-.199						11
12	-.102	-.109		-.149		-.194	-.194	-.300				12
13	-.097	-.104	.022	.020		-.192	-.194	-.297				13
14	-.097	.124	.123	.064		-.155	-.197	-.222				14
15	.045	.160	.132	.039		-.156	-.191	-.261				15
16	.149	.191	.146	-.037		-.147	-.149	-.120				16
17	.368	.148	.094	-.062								17
18	-.159	-.317	-.331	-.328		-.197	-.269	-.316				18
19	-.328	-.388	-.387	-.382	-.354	-.233	-.286	-.318				19
20	-.326	-.401	-.374	-.374	-.363	-.231	-.290	-.331				20
21	-.327	-.389	-.332	-.314	-.306	-.226	-.276	-.326				21
22	-.356	-.244	-.263	-.260	-.258	-.131	-.166	-.338				22

Table24 Continued

Pressure coefficients on swept wing

Configuration46 M=1.61 R=3.6 x 10^6

Orif	Station 1	2	3	4	24	5	6	7	8	9	10	Orif
					α= 6		δ= 30.0					
1	.882	.704	.619	.536		.764	.296	.891				1
2	.004	-.145	-.162	-.165		-.168	-.172	-.130				2
3	-.087	-.134	-.149	-.132		-.149	-.152	-.122				3
4	-.049	-.118	-.166	-.170		-.169	-.174	-.162				4
5	-.066	-.125	-.172	-.164		-.174	-.176	-.157				5
6	-.083	-.116	-.173	-.182		-.180	-.179	-.149				6
7	-.086	-.110	-.149	-.185		-.183	-.188	-.159				7
8	-.103	-.120	-.159	-.195		-.194	-.197	-.185				8
9	-.096	-.133	-.162	-.207		-.207	-.196	-.228				9
10	-.096	-.125		-.196		-.201	-.205	-.276				10
11	-.103	-.121		.009		-.095						11
12	-.102	-.110		.057		-.065	-.197	-.303				12
13	-.104	-.091	.132	.064		-.072	-.196	-.304				13
14	-.097	.202	.134	.056		-.091	-.199	-.228				14
15	.086	.200	.159	.043		-.128	-.182	-.268				15
16	.202	.120	.146	-.099		-.141	-.138	-.123				16
17	.573	.325	.099	-.194								17
18	-.190	-.392	-.417	-.413		-.191	-.258	-.324				18
19	-.424	-.445	-.425	-.378	-.383	-.218	-.275	-.321				19
20	-.408	-.452	-.372	-.349	-.354	-.230	-.262	-.333				20
21	-.401	-.424	-.350	-.333	-.331	-.226	-.246	-.330				21
22	-.412	-.296	-.326	-.338	-.290	-.080	-.054	-.345				22
					α= 9		δ= 0.0					
1	.941	.431	.441	.349		.743	.147	1.020				1
2	-.043	-.213	-.227	-.246		-.248	-.265	-.252				2
3	-.134	-.213	-.220	-.220		-.234	-.241	-.246				3
4	-.090	-.204	-.241	-.244		-.246	-.250	-.253				4
5	-.105	-.171	-.248	-.238		-.245	-.246	-.309				5
6	-.117	-.166	-.246	-.250		-.247	-.251	-.326				6
7	-.121	-.153	-.239	-.249		-.247	-.259	-.328				7
8	-.137	-.165	-.247	-.252		-.263	-.259	-.335				8
9	-.135	-.176	-.230	-.262		-.266	-.258	-.352				9
10	-.136	-.164		-.256		-.263	-.260	-.354				10
11	-.140	-.159		-.254		-.260						11
12	-.139	-.150		-.246		-.248	-.252	-.363				12
13	-.141	-.145	-.174	-.248		-.250	-.254	-.370				13
14	-.137	-.142	-.168	-.232		-.248	-.256	-.307				14
15	-.137	-.166	-.168	-.133		-.263	-.247	-.351				15
16	-.084	-.066	-.053	-.040		-.244	-.210	-.194				16
17	.153	.255	.426	.526								17
18	-.112	-.164	-.180	-.241		-.290	-.308	-.384				18
19	-.165	-.219	-.227	-.276	-.289	-.323	-.320	-.380				19
20	-.172	-.222	-.232	-.268	-.273	-.313	-.310	-.380				20
21	-.205	-.204	-.226	-.257	-.297	-.308	-.300	-.371				21
22	-.147	-.082	-.170	-.201	-.247	-.219	-.210	-.367				22
					α= 12		δ= -30.0					
1	.969	.253	.217	.177		.661	.007	.878				1
2	-.088	-.299	-.318	-.336		-.355	-.378	-.450				2
3	-.177	-.285	-.302	-.306		-.331	-.348	-.457				3
4	-.130	-.294	-.312	-.322		-.333	-.344	-.494				4
5	-.142	-.259	-.317	-.320		-.332	-.340	-.505				5
6	-.157	-.219	-.313	-.322		-.329	-.339	-.505				6
7	-.163	-.199	-.315	-.322		-.326	-.341	-.503				7
8	-.173	-.207	-.326	-.326		-.333	-.341	-.502				8
9	-.174	-.217	-.323	-.337		-.336	-.343	-.488				9
10	-.175	-.207		-.327		-.322	-.341	-.466				10
11	-.177	-.202		-.251		-.207						11
12	-.180	-.194		-.126		-.195	-.336	-.481				12
13	-.181	-.193	-.090	-.095		-.204	-.333	-.501				13
14	-.176	-.188	-.025	-.117		-.203	-.322	-.479				14
15	-.179	.056	-.007	-.114		-.222	-.294	-.486				15
16	-.111	.091	.029	-.240		-.234	-.273	-.259				16
17	1.589	1.123	1.024	.884								17
18	-.285	-.099	-.083	-.046		-.244	-.311	-.496				18
19	-.139	-.081	-.120	-.148	-.237	-.262	-.235	-.491				19
20	-.006	.119	.002	-.234	-.312	-.262	-.190	-.476				20
21	.061	.208	.124	-.194	-.292	-.244	-.167	-.454				21
22	.081	.149	.128	-.206	-.282	-.210	-.150	-.413				22

Table24 Continued

Pressure coefficients on swept wing

Configuration46 M=1.61 R=3.6 x 10^6

Orif	Station 1	2	3	4	24	5	6	7	8	9	10	Orif
					α= 12		δ= -20.0					
1	.973	.251	.221	.179		.662	.010	.887				1
2	-.086	-.297	-.317	-.335		-.352	-.375	-.441				2
3	-.175	-.289	-.302	-.307		-.331	-.347	-.446				3
4	-.127	-.294	-.311	-.322		-.330	-.341	-.492				4
5	-.146	-.263	-.315	-.320		-.328	-.338	-.510				5
6	-.161	-.218	-.316	-.320		-.327	-.339	-.505				6
7	-.163	-.205	-.314	-.322		-.326	-.339	-.502				7
8	-.171	-.208	-.326	-.327		-.332	-.340	-.502				8
9	-.174	-.218	-.328	-.336		-.337	-.341	-.488				9
10	-.175	-.206		-.329		-.336	-.340	-.471				10
11	-.181	-.201		-.327		-.333						11
12	-.181	-.195		-.324		-.329	-.334	-.474				12
13	-.182	-.191	-.229	-.322		-.328	-.332	-.497				13
14	-.174	-.185	-.189	-.205		-.318	-.333	-.473				14
15	-.181	-.132	-.103	-.169		-.333	-.329	-.481				15
16	-.206	-.053	-.075	-.165		-.326	-.303	-.251				16
17	.948	.654	.668	.545								17
18	-.234	-.179	-.173	-.226		-.348	-.374	-.491				18
19	-.170	-.065	-.103	-.223	-.268	-.361	-.383	-.490				19
20	-.109	-.010	-.047	-.255	-.277	-.331	-.358	-.483				20
21	-.096	.014	-.013	-.225	-.291	-.304	-.285	-.472				21
22	-.089	-.020	-.031	-.210	-.251	-.207	-.200	-.418				22
					α= 12		δ= -10.0					
1	.970	.253	.220	.181		.664	.019	.893				1
2	-.090	-.293	-.315	-.338		-.347	-.374	-.435				2
3	-.173	-.287	-.299	-.307		-.328	-.343	-.438				3
4	-.131	-.291	-.309	-.318		-.325	-.336	-.487				4
5	-.140	-.260	-.314	-.317		-.329	-.336	-.502				5
6	-.155	-.219	-.310	-.318		-.324	-.334	-.499				6
7	-.159	-.202	-.311	-.320		-.323	-.336	-.495				7
8	-.171	-.208	-.322	-.324		-.330	-.335	-.492				8
9	-.171	-.214	-.318	-.331		-.331	-.335	-.484				9
10	-.174	-.205		-.320		-.328	-.336	-.460				10
11	-.176	-.201		-.322		-.325						11
12	-.177	-.193		-.315		-.324	-.331	-.470				12
13	-.178	-.187	-.227	-.316		-.321	-.331	-.492				13
14	-.173	-.182	-.215	-.308		-.312	-.327	-.470				14
15	-.177	-.204	-.228	-.283		-.327	-.320	-.476				15
16	-.192	-.192	-.191	-.222		-.324	-.290	-.243				16
17	.410	.339	-.006	-.179								17
18	-.213	-.172	-.183	-.418		-.347	-.369	-.487				18
19	-.198	-.163	-.176	-.338	-.345	-.378	-.375	-.486				19
20	-.170	-.153	-.174	-.299	-.291	-.383	-.364	-.482				20
21	-.167	-.155	-.165	-.270	-.307	-.375	-.360	-.466				21
22	-.114	-.106	-.159	-.202	-.241	-.244	-.219	-.419				22
					α= 12		δ= - 5.0					
1	.977	.254	.225	.183		.663	.020	.894				1
2	-.085	-.296	-.314	-.333		-.352	-.373	-.432				2
3	-.173	-.287	-.300	-.302		-.330	-.340	-.433				3
4	-.126	-.294	-.309	-.319		-.329	-.334	-.480				4
5	-.145	-.264	-.311	-.318		-.329	-.333	-.497				5
6	-.158	-.217	-.310	-.318		-.326	-.333	-.495				6
7	-.160	-.202	-.314	-.321		-.324	-.334	-.490				7
8	-.171	-.209	-.321	-.322		-.333	-.334	-.490				8
9	-.171	-.215	-.321	-.331		-.331	-.334	-.478				9
10	-.172	-.204		-.318		-.326	-.333	-.458				10
11	-.176	-.201		-.318		-.325						11
12	-.177	-.191		-.317		-.321	-.328	-.469				12
13	-.179	-.186	-.228	-.312		-.318	-.326	-.497				13
14	-.173	-.177	-.214	-.298		-.313	-.323	-.474				14
15	-.175	-.197	-.215	-.276		-.329	-.316	-.477				15
16	-.130	-.162	-.164	-.169		-.317	-.282	-.248				16
17	-.153	-.092	-.157	-.094								17
18	-.191	-.187	-.210	-.425		-.349	-.360	-.489				18
19	-.199	-.222	-.248	-.375	-.375	-.381	-.370	-.491				19
20	-.203	-.228	-.244	-.323	-.326	-.377	-.358	-.484				20
21	-.203	-.234	-.239	-.304	-.339	-.369	-.349	-.468				21
22	-.129	-.106	-.186	-.193	-.245	-.247	-.218	-.424				22

Table 24 Continued

Pressure coefficients on swept wing

Configuration 46 M = 1.61 R = 3.6 x 10^6

Orif	Station 1	2	3	4	24	5	6	7	8	9	10	Orif
					α = 12		δ = 0.0					
1	.968	.242	.213	.174		.658	.015	.883				1
2	-.087	-.283	-.299	-.322		-.326	-.347	-.375				2
3	-.171	-.283	-.292	-.296		-.307	-.329	-.369				3
4	-.131	-.280	-.303	-.312		-.309	-.318	-.380				4
5	-.142	-.253	-.306	-.304		-.308	-.316	-.417				5
6	-.157	-.217	-.306	-.310		-.309	-.319	-.430				6
7	-.160	-.198	-.305	-.311		-.307	-.320	-.430				7
8	-.175	-.208	-.315	-.310		-.323	-.319	-.431				8
9	-.172	-.212	-.309	-.322		-.322	-.318	-.432				9
10	-.172	-.204		-.311		-.318	-.318	-.418				10
11	-.178	-.198		-.314		-.316						11
12	-.177	-.190		-.313		-.313	-.314	-.427				12
13	-.178	-.186	-.226	-.309		-.309	-.314	-.438				13
14	-.173	-.182	-.218	-.305		-.308	-.316	-.391				14
15	-.178	-.198	-.188	-.233		-.319	-.299	-.416				15
16	-.092	-.104	-.106	-.124		-.298	-.262	-.229				16
17	.194	.361	.564	.643								17
18	-.166	-.205	-.234	-.362		-.340	-.354	-.435				18
19	-.205	-.273	-.290	-.379	-.361	-.364	-.361	-.433				19
20	-.218	-.278	-.300	-.345	-.345	-.370	-.357	-.432				20
21	-.238	-.270	-.296	-.361	-.363	-.369	-.348	-.418				21
22	-.181	-.091	-.166	-.216	-.251	-.262	-.226	-.397				22
					α = 12		δ = 5.0					
1	.969	.243	.206	.167		.661	.004	.887				1
2	-.090	-.297	-.318	-.338		-.347	-.368	-.415				2
3	-.177	-.289	-.303	-.306		-.327	-.341	-.409				3
4	-.136	-.295	-.314	-.321		-.331	-.333	-.425				4
5	-.148	-.263	-.316	-.318		-.327	-.333	-.453				5
6	-.162	-.224	-.314	-.323		-.327	-.333	-.458				6
7	-.166	-.202	-.316	-.322		-.325	-.333	-.454				7
8	-.177	-.211	-.324	-.325		-.338	-.333	-.456				8
9	-.175	-.220	-.323	-.334		-.334	-.334	-.452				9
10	-.176	-.207		-.326		-.333	-.333	-.438				10
11	-.179	-.205		-.324		-.329						11
12	-.179	-.199		-.322		-.325	-.331	-.448				12
13	-.182	-.193	-.234	-.324		-.321	-.331	-.470				13
14	-.177	-.190	-.220	-.318		-.314	-.325	-.433				14
15	-.175	-.118	-.106	-.171		-.330	-.314	-.446				15
16	-.047	-.027	-.080	-.115		-.310	-.272	-.241				16
17	.351	.603	.642	.649								17
18	-.135	-.257	-.275	-.381		-.347	-.362	-.460				18
19	-.234	-.323	-.342	-.414	-.394	-.380	-.371	-.460				19
20	-.276	-.335	-.347	-.384	-.379	-.381	-.365	-.459				20
21	-.319	-.328	-.341	-.367	-.375	-.383	-.363	-.448				21
22	-.214	-.148	-.184	-.197	-.270	-.258	-.230	-.416				22
					α = 12		δ = 10.0					
1	.974	.245	.210	.171		.655	.002	.884				1
2	-.086	-.299	-.318	-.337		-.347	-.375	-.428				2
3	-.175	-.287	-.304	-.305		-.328	-.347	-.428				3
4	-.132	-.298	-.315	-.322		-.329	-.343	-.446				4
5	-.149	-.265	-.313	-.319		-.327	-.340	-.469				5
6	-.160	-.219	-.313	-.321		-.326	-.338	-.472				6
7	-.163	-.203	-.315	-.323		-.325	-.338	-.470				7
8	-.178	-.211	-.325	-.327		-.332	-.337	-.470				8
9	-.175	-.218	-.324	-.333		-.339	-.339	-.465				9
10	-.176	-.205		-.326		-.337	-.338	-.446				10
11	-.178	-.201		-.327		-.332						11
12	-.180	-.195		-.324		-.328	-.334	-.459				12
13	-.181	-.191	-.236	-.323		-.326	-.335	-.478				13
14	-.177	-.189	-.144	-.281		-.318	-.331	-.444				14
15	-.163	-.014	-.064	-.141		-.331	-.319	-.448				15
16	.020	.031	-.050	-.112		-.315	-.277	-.244				16
17	.026	.073	.017	.106								17
18	-.125	-.290	-.302	-.392		-.351	-.369	-.462				18
19	-.268	-.356	-.368	-.422	-.404	-.384	-.375	-.464				19
20	-.309	-.369	-.376	-.363	-.376	-.386	-.373	-.459				20
21	-.348	-.359	-.317	-.312	-.341	-.388	-.371	-.448				21
22	-.296	-.198	-.223	-.206	-.272	-.246	-.229	-.412				22

Table24 Concluded

Pressure coefficients on swept wing

Configuration46 M=1.61 R=3.6 x 10^6

Orif	Station 1	2	3	4	24	5	6	7	8	9	10	Orif
					α= 12		δ= 20.0					
1	.972	.248	.209	.174		.661	.008	.880				1
2	-.088	-.298	-.317	-.333		-.352	-.381	-.437				2
3	-.171	-.289	-.303	-.308		-.326	-.354	-.446				3
4	-.138	-.296	-.314	-.318		-.329	-.346	-.470				4
5	-.148	-.264	-.318	-.320		-.325	-.343	-.488				5
6	-.160	-.220	-.311	-.322		-.326	-.341	-.491				6
7	-.163	-.201	-.313	-.325		-.326	-.343	-.480				7
8	-.178	-.209	-.323	-.326		-.338	-.342	-.480				8
9	-.177	-.218	-.322	-.334		-.341	-.342	-.476				9
10	-.180	-.205		-.330		-.337	-.340	-.460				10
11	-.184	-.200		-.326		-.335						11
12	-.182	-.195		-.205		-.334	-.336	-.472				12
13	-.183	-.188	-.085	-.140		-.329	-.335	-.484				13
14	-.175	.031	-.050	-.138		-.298	-.333	-.456				14
15	.059	.051	-.050	-.151		-.286	-.322	-.464				15
16	.149	.096	-.045	-.218		-.277	-.276	-.241				16
17	.178	.007	-.167	-.308								17
18	-.207	-.374	-.384	-.382		-.323	-.372	-.476				18
19	-.359	-.422	-.337	-.320	-.395	-.358	-.379	-.476				19
20	-.380	-.432	-.311	-.301	-.307	-.353	-.353	-.472				20
21	-.357	-.375	-.295	-.283	-.322	-.265	-.246	-.459				21
22	-.390	-.285	-.282	-.296	-.255	-.194	-.196	-.414				22
					α= 12		δ= 30.0					
1	.974	.253	.220	.183		.667	.021	.899				1
2	-.084	-.294	-.318	-.333		-.350	-.376	-.439				2
3	-.177	-.290	-.304	-.304		-.326	-.343	-.446				3
4	-.130	-.291	-.311	-.317		-.328	-.338	-.480				4
5	-.141	-.259	-.311	-.318		-.325	-.333	-.493				5
6	-.158	-.219	-.314	-.320		-.322	-.333	-.489				6
7	-.162	-.196	-.315	-.318		-.324	-.333	-.482				7
8	-.174	-.212	-.322	-.325		-.328	-.334	-.487				8
9	-.173	-.219	-.323	-.335		-.280	-.334	-.476				9
10	-.173	-.205		-.145		-.192	-.334	-.457				10
11	-.178	-.205		-.117		-.203						11
12	-.180	-.193		-.104		-.212	-.329	-.471				12
13	-.178	.037	-.051	-.122		-.235	-.326	-.493				13
14	-.061	.081	-.038	-.149		-.251	-.314	-.465				14
15	.126	.107	.031	-.133		-.276	-.274	-.465				15
16	.147	.122	-.023	-.226		-.283	-.239	-.239				16
17	.287	.050	-.191	-.390								17
18	-.259	-.427	-.387	-.368		-.318	-.348	-.479				18
19	-.394	-.458	-.350	-.330	-.389	-.334	-.356	-.481				19
20	-.420	-.431	-.335	-.320	-.331	-.342	-.240	-.475				20
21	-.403	-.394	-.329	-.322	-.340	-.253	-.196	-.460				21
22	-.414	-.322	-.315	-.333	-.293	-.197	-.165	-.412				22
					α= 15		δ= 0.0					
1	.998	.103	-.021	-.038		.434	-.177	.630				1
2	-.125	-.344	-.362	-.392		-.399	-.417	-.464				2
3	-.202	-.332	-.354	-.367		-.380	-.398	-.473				3
4	-.164	-.330	-.352	-.367		-.378	-.386	-.496				4
5	-.177	-.324	-.361	-.362		-.375	-.383	-.512				5
6	-.190	-.283	-.355	-.363		-.373	-.384	-.506				6
7	-.191	-.246	-.351	-.361		-.368	-.380	-.502				7
8	-.204	-.243	-.357	-.361		-.377	-.375	-.501				8
9	-.205	-.244	-.361	-.368		-.374	-.375	-.490				9
10	-.208	-.234		-.360		-.364	-.371	-.474				10
11	-.212	-.233		-.354		-.356						11
12	-.210	-.224		-.348		-.353	-.362	-.486				12
13	-.210	-.220	-.283	-.349		-.349	-.363	-.507				13
14	-.208	-.217	-.270	-.343		-.348	-.365	-.483				14
15	-.206	-.234	-.214	-.275		-.360	-.348	-.491				15
16	-.106	-.123	-.190	-.193		-.341	-.322	-.253				16
17	.260	.525	.739	.790								17
18	-.191	-.223	-.264	-.379		-.369	-.389	-.498				18
19	-.238	-.272	-.290	-.380	-.376	-.392	-.379	-.490				19
20	-.216	-.270	-.289	-.358	-.362	-.385	-.369	-.475				20
21	-.246	-.257	-.290	-.319	-.331	-.339	-.358	-.455				21
22	-.173	-.081	-.145	-.218	-.281	-.274	-.256	-.433				22

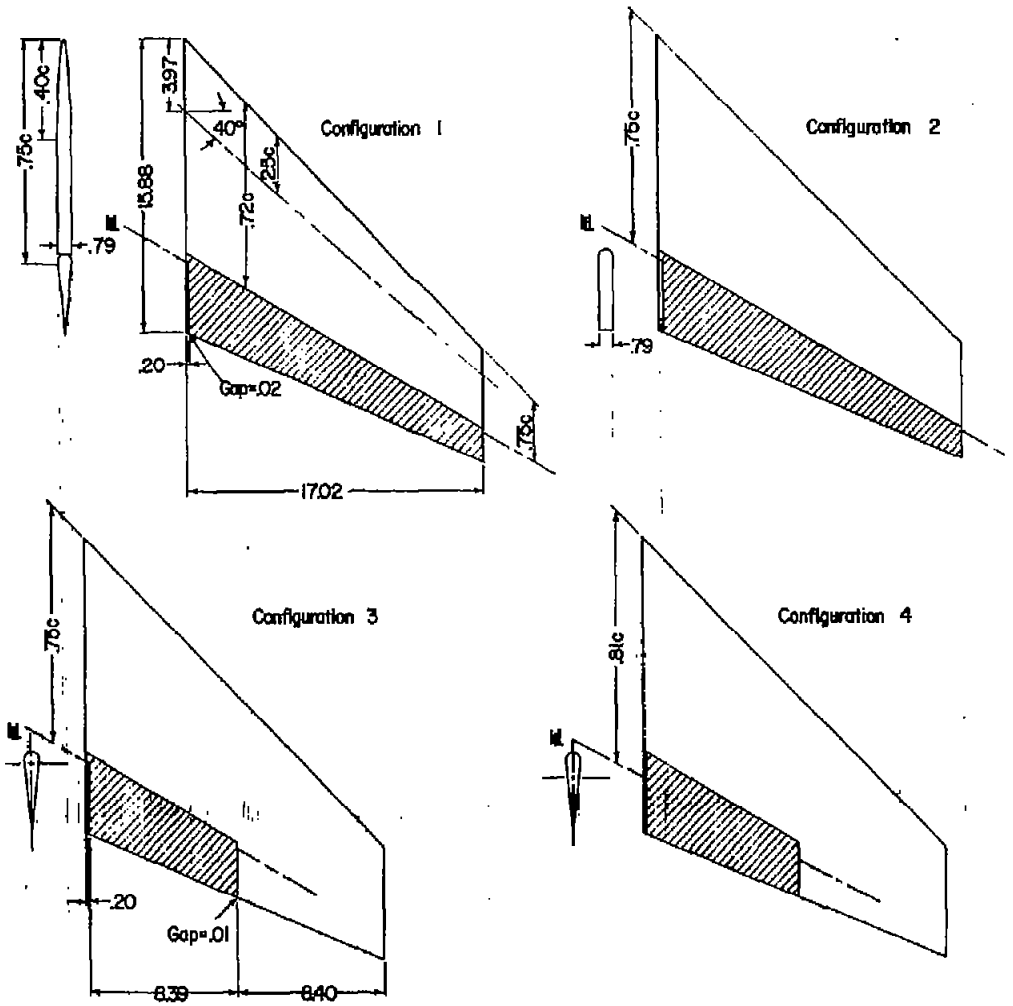

(a) Configurations 1 to 4.

Figure 1.- Sketches of the model configurations tested. (All dimensions are in inches.)

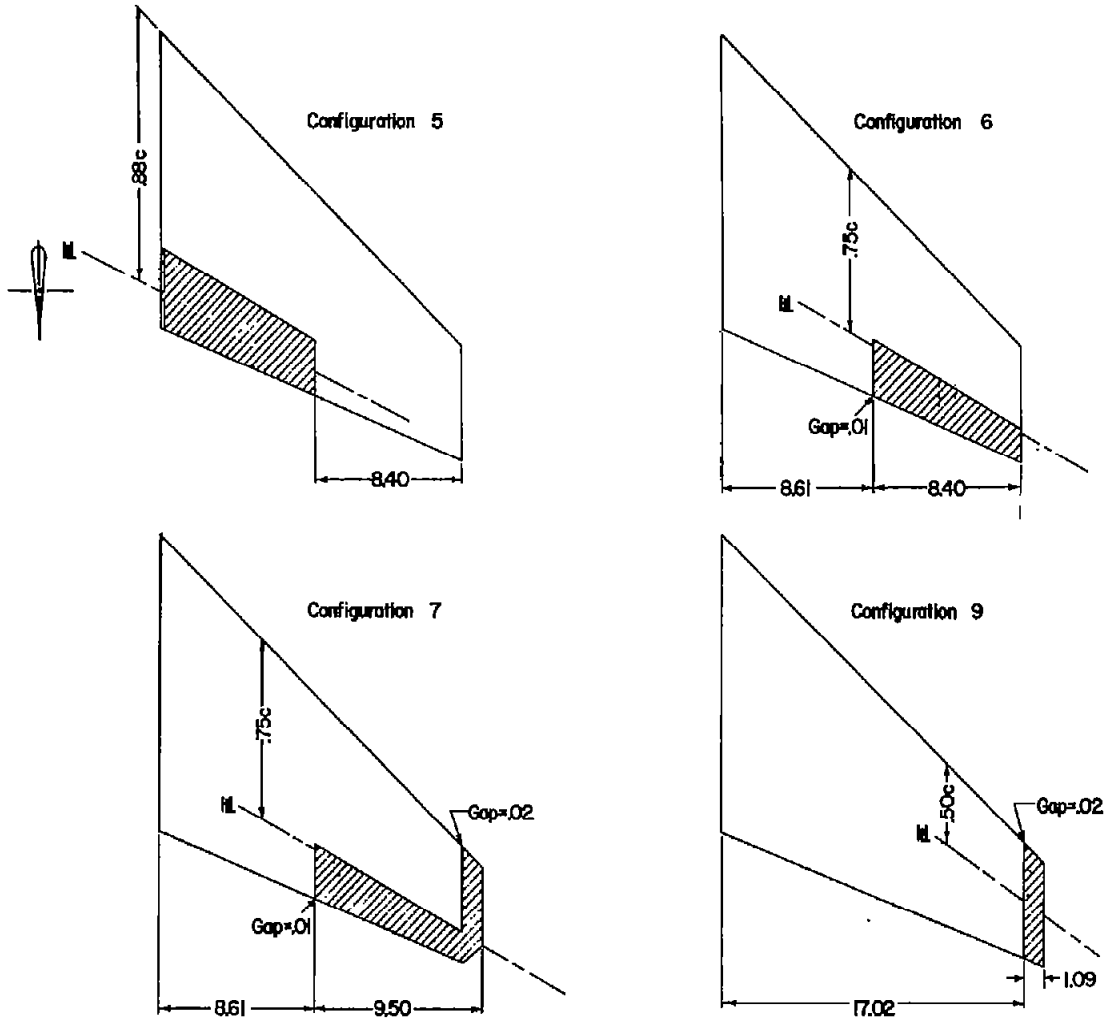

(b) Configurations 5 to 9.

Figure 1.- Continued.

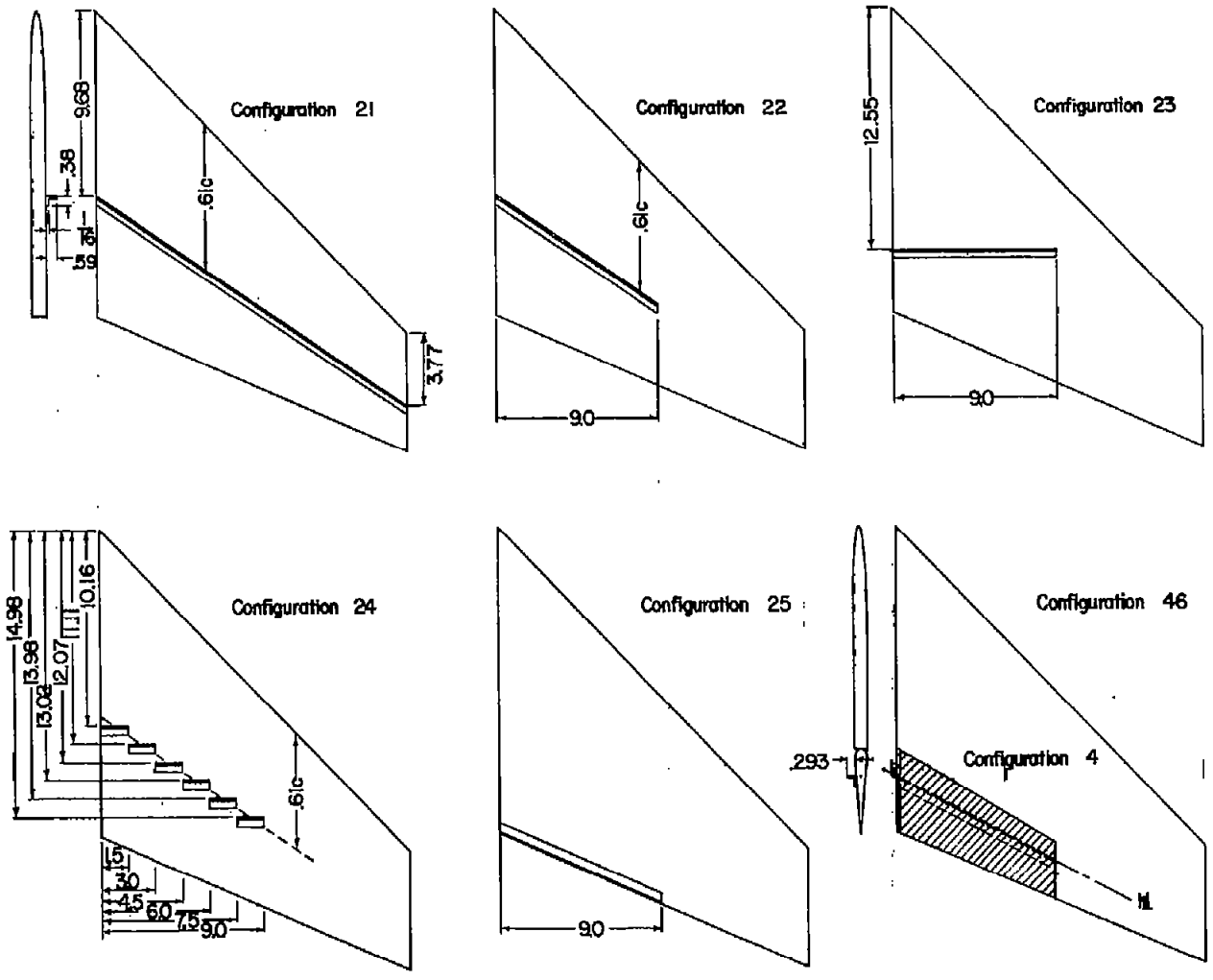

(c) Spoiler configurations.

Figure 1.- Concluded.

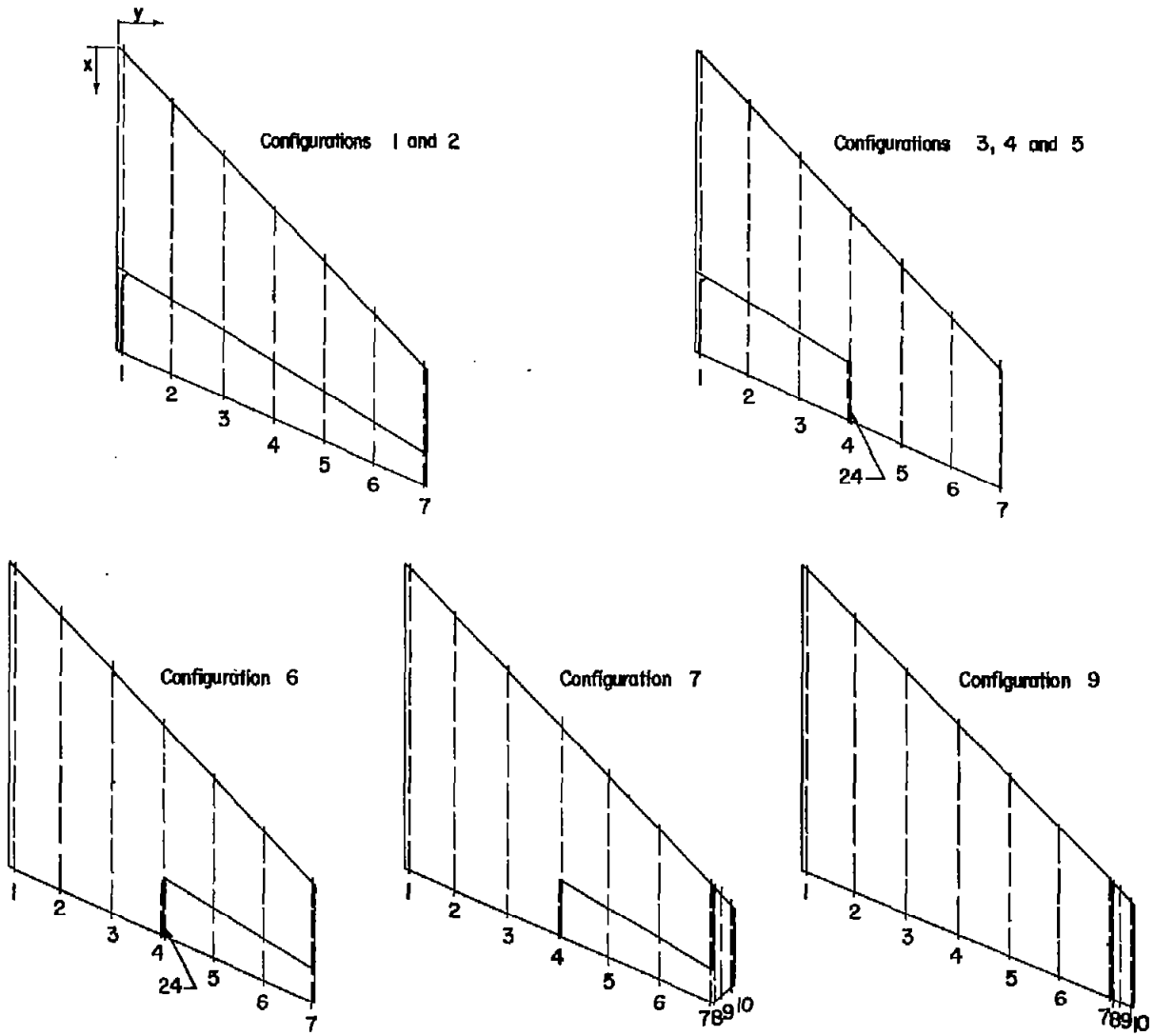

Figure 2.- Locations of the orifice stations.

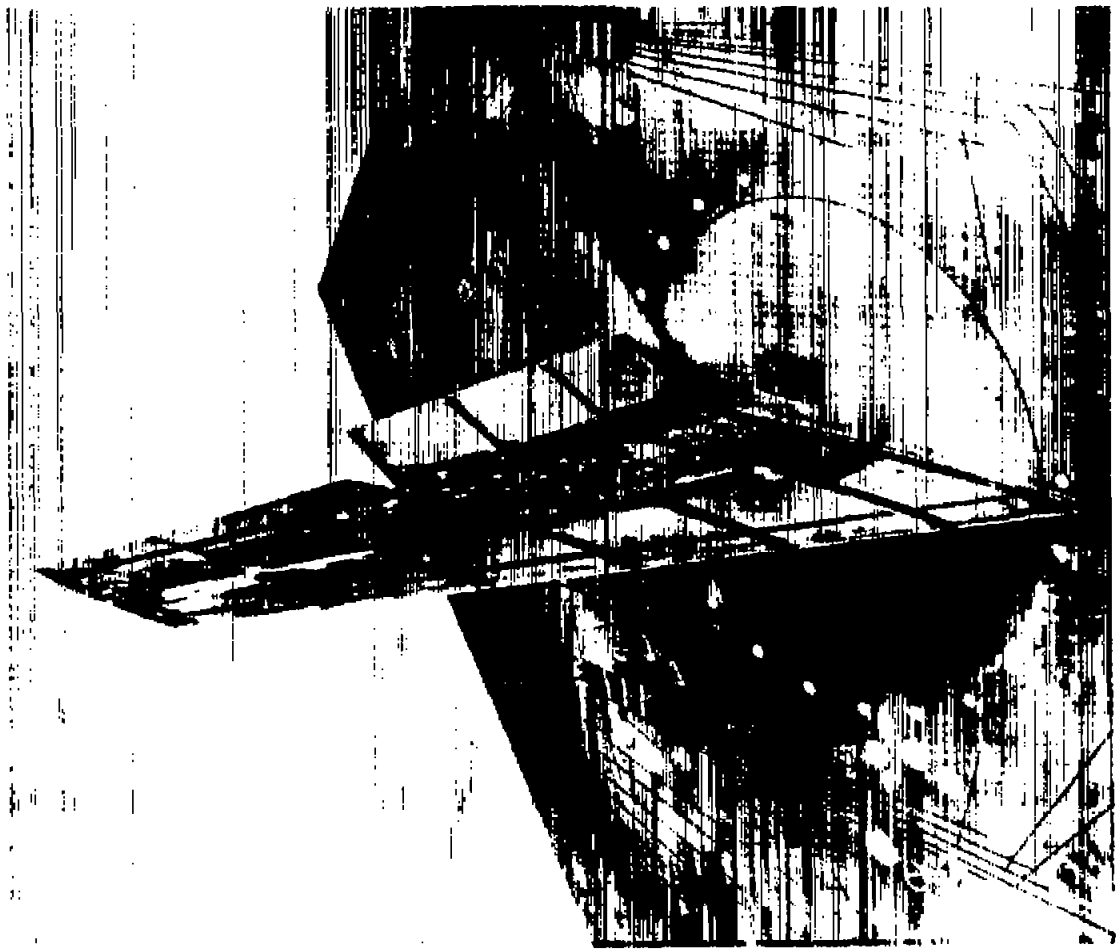

(a) Configuration 3. L-91657

Figure 3.- Photographs of two of the movable control configurations mounted on the bypass plate for testing.

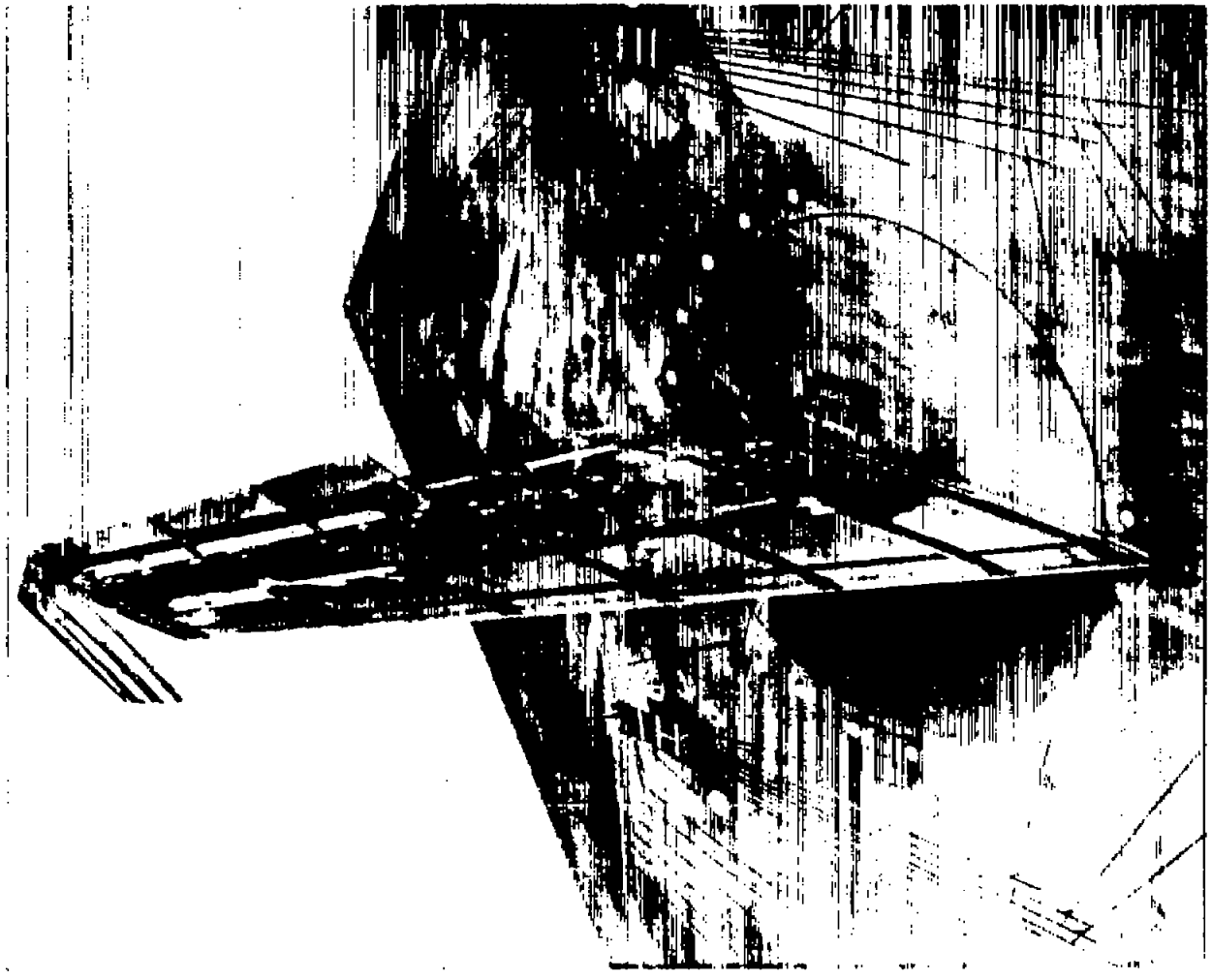

(b) Configuration 7. L-91654

Figure 3.- Concluded.