Library Copy - A.H. 1119
J.O. R7C.107



3 1176 00113 6309

Authority NACA Form 126 Date
Dir., Aeron. Research
NACA
By M.N.S. See
1-23-51

# RESEARCH MEMORANDUM

for the

Air Materiel Command, Army Air Forces

## FREE-SPINNING-TUNNEL TESTS OF A 1/20-SCALE MODEL OF THE NORTHROP N-9M AIRPLANE

By

George F. MacDougall, Jr. and Jacob H. Lichtenstein

Langley Memorial Aeronautical Laboratory
Langley Field, Va.

November 4, 1946

[redacted]

TECHNICAL EDITING WAIVED

NATIONAL ADVISORY COMMITTEE FOR AERONAUTICS

WASHINGTON

LANGLEY MEMORIAL AERONAUTICAL LABORATORY
Langley Field, Va.

NATIONAL ADVISORY COMMITTEE FOR AERONAUTICS

RESEARCH MEMORANDUM

for the

Air Materiel Command, Army Air Forces

# FREE-SPINNING-TUNNEL TESTS OF A 1/20-SCALE MODEL OF THE NORTHROP N-9M AIRPLANE

By George F. MacDougall, Jr. and Jacob H. Lichtenstein

## SUMMARY

Spin tests of a 1/20-scale model of the Northrop N-9M airplane have been performed in the Langley 20-foot free-spinning tunnel. The erect and inverted spin and recovery characteristics were determined for various loading conditions and the effect of deflecting the flaps and of extending the landing gear was investigated. The investigation also included tests to determine the size parachute required for satisfactory spin recovery by parachute action alone. The tests were performed at an equivalent spin altitude of 15,000 feet

A specialized recovery technique consisting of rapid full reversal of the rudder pedals to against the spin combined with turning the wheel against the spin and movement of the stick forward is recommended for all loadings and configurations of the airplane. The results also indicated that a 7-foot-diameter spin-recovery parachute having a drag coefficient of 0.7 attached to the outboard wing tip with a towline of 10 to 30 feet or an 8.8-foot-diameter parachute attached to the fixed portion of the wing between the elevons and the pitch flaps with a 30-foot towline would provide satisfactory recovery from demonstration spins by parachute action alone. It appears possible that the first N-9M airplane may have crashed because of failure to recover from a spin.

## INTRODUCTION

A fatal crash of the first Northrop N-9M airplane, an approximately 1/3-scale flying model of the Northrop XB-35 airplane, occurred during flight tests. There were no reliable witnesses of the accident, but an examination of the wreckage indicated that the

airplane might have crashed because of failure to recover from a spin. The Army Air Forces therefore requested that the NACA investigate the spin-recovery characteristics of the N-9M airplane. A series of tests were therefore performed in the Langley 20-foot free-spinning tunnel to determine the spin and recovery characteristics of a 1/20-scale model of the N-9M airplane. The results of these tests are presented herein.

The airplane represented by the model is a twin-engine, flying-wing airplane equipped with pusher propellers. Controls, designated by Northrop Aircraft, Inc. as "scoop rudders" and "pitch flaps," are installed at the wing tips for directional control. The scoop rudders are installed on the lower surface of the wing just forward of the leading edge of the pitch flaps. The pitch flaps are trailing-edge flaps and are deflected up to offset the lift, rolling moment, and pitching moment contributed by the scoop rudders in the deflected position. Longitudinal and lateral control are obtained with trailing-edge flaps designated by Northrop as "elevons." The elevons serve as both elevators and ailerons and are located just inboard of the directional control devices. Landing flaps are installed along the trailing edge of the wing between the plane of symmetry and the inboard end of the elevons.

The erect and inverted spin and recovery characteristics of the model in the clean configuration (flaps neutral and landing gear retracted) were determined for a loading designated by Northrop as flight test condition number 1. The spin and recovery characteristics with the elevons freely floating, and the recovery characteristics either by neutralization of the rudder controls or by movement of the stick forward were also determined for flight test condition number 1. The effect of changes in mass distribution and center-of-gravity location were investigated for flight test condition number 1 and the spin and recovery characteristics were also determined for a loading designated by Northrop as flight test condition number 3. The effects of deflecting the flaps and of extending the landing gear were determined for flight test condition number 1. Tests were also performed with the model simulating the configuration in which the airplane is believed to have been at the time of the crash for flight test condition number 1. At the request of Northrop Aircraft, Inc., tests were performed with 20-percent and with 35-percent span leading-edge slats installed to determine their effect on the spin and recovery characteristics of the model. Tests were also performed with horizontal area equal to 2 percent of the wing area installed on a boom rearward of the center of the wing. The fin effect of windmilling propellers was ascertained from tests with equivalent propeller fin area installed.

Tests were also performed to determine the size spin-recovery parachute required for satisfactory spin recovery by parachute action alone for two points of towline attachment.

The N-9M airplane, as previously mentioned, is a scale flying model of the XB-35 airplane. The rudder controls on the two airplanes, however, are somewhat different. A comparison of the results of the spin tests of the N-9M and XB-35 (reference 1) models was, therefore, made to ascertain whether the difference in rudder controls was sufficient to cause a difference in the spin and recovery characteristics of the models. In addition, the increments in aerodynamic rolling and yawing moments contributed by the N-9M and XB-35 rudder controls when deflected were measured on the balance in the NACA free-flight tunnel and compared.

## SYMBOLS

| | |
|---|---|
| $b$ | wing span, feet |
| $S$ | wing area, square feet |
| $c$ | wing chord at any station along the span |
| $\bar{c}$ | mean aerodynamic chord, feet |
| $x/\bar{c}$ | ratio of distance of center of gravity rearward of leading edge of mean aerodynamic chord to mean aerodynamic chord |
| $z/\bar{c}$ | ratio of distance between center of gravity and root chord line to mean aerodynamic chord (positive when center of gravity is below root chord line) |
| $m$ | mass of airplane, slugs |
| $I_X$, $I_Y$, $I_Z$ | moments of inertia about X, Y, and Z body axes, respectively, slug-feet$^2$ |
| $\frac{I_X - I_Y}{mb^2}$ | inertia yawing-moment parameter |
| $\frac{I_Y - I_Z}{mb^2}$ | inertia rolling-moment parameter |

$\frac{I_Z - I_X}{mb^2}$ inertia pitching-moment parameter

$\rho$ air density, slug per cubic feet

$\mu$ relative density of airplane $\frac{m}{\rho Sb}$

$\alpha$ angle between root chord line and vertical (approximately equal to absolute value of angle of attack at plane of symmetry), degrees

$\phi$ angle between span axis and horizontal, degrees

$V$ full-scale true rate of descent, feet per second

$\Omega$ full-scale angular velocity about spin axis, revolutions per second

$\sigma$ helix angle, angle between flight path and vertical, degrees (For the tests of this model, the average absolute value of the helix angle was approximately $7^{\circ}$.)

$\beta$ approximate angle of sideslip at center of gravity, degrees (Sideslip is inward when inner wing is down by an amount greater than the helix angle.)

$q$ dynamic pressure, $\frac{1}{2}\rho V^2$, pounds per square foot

$\Delta L$ increment of rolling moment contributed by rudder controls in the deflected position, foot-pounds

$\Delta N$ increment of yawing moment contributed by rudder controls in the deflected position, foot-pounds

$\Delta C_l$ coefficient of incremental rolling moment contributed by rudder controls in the deflected position $\frac{\Delta L}{qbS}$

$\Delta C_n$ coefficient of incremental yawing moment contributed by rudder controls in the deflected position $\frac{\Delta N}{qbS}$

## APPARATUS AND METHODS

### Models

The 1/20-scale model of the Northrop N-9M airplane used in the tests was constructed by Northrop Aircraft, Inc. and was prepared for testing and checked for dimensional accuracy by Langley. The plan form of the pitch flaps was altered by Langley to conform with revised information received from Northrop prior to the start of the tests. The dimensional characteristics of the airplane represented by the model are given in table I. A three-view drawing of the model as tested in the clean condition, and photographs of the model in the clean and in the landing conditions are presented as figures 1, 2, and 3, respectively. Installation of slats and of horizontal area are shown on figures 4 and 5, respectively. The slats were constructed by Langley from information provided by Northrop Aircraft, Inc. The installation of the XB-35 type split rudders and a comparison of the XB-35 and N-9M rudder controls are shown on figure 6.

The model was ballasted by means of lead weights to obtain dynamic similarity to the airplane at an altitude of 15,000 feet ($\rho$ = 0.001496 slug per cubic foot). The weight, center-of-gravity location, and moments of inertia of the airplane were obtained from data furnished by Northrop Aircraft, Inc. A remote-control mechanism was installed in the model to actuate the controls or to open the parachute for recovery tests. Provision was made for removing equivalent properly located ballast weights when the landing gear and flaps were installed so that the mass distribution of the model in the landing condition would represent that of the airplane.

The model parachutes used were of the flat circular type, made of silk, and had a drag coefficient of approximately 0.7 based on the surface area of the canopy when spread out flat. If parachutes with a drag coefficient lower than 0.7 are used on the airplane, the parachute diameter must be correspondingly larger.

Propellers were not simulated on the model. As previously indicated, however, some spin tests were performed with equivalent propeller fin area installed. The installation of the equivalent fin area is shown on figure 7.

### Wind-Tunnel and Testing Techniques

Spin tests.- The spin tests were performed in the Langley 20-foot free-spinning tunnel, the operation of which is generally similar to that described in reference 2 for the 15-foot free-spinning tunnel.

With the controls set in position, the model is launched by hand with rotation into the vertically rising air stream. The model then assumes its spin attitude and is maintained at a specified level by adjusting the airspeed so that the model drag equals its weight. The model is shown spinning in the 20-foot free-spinning tunnel in figure 8. After a number of turns of the established spin have been photographed, a recovery attempt is made by moving one or more controls by means of the remote-control mechanism; if recovery is effected, the model dives or glides into a safety net. The spin data obtained from the tests are then converted to corresponding full-scale values by methods described in reference 2.

In accordance with standard spin-tunnel procedure, tests were performed to determine the spin and recovery characteristics of the model for the normal spinning control configuration (stick full back, wheel neutral, and rudder controls full with the spin) and for various other stick and wheel positions, including neutral, intermediate, and maximum deflections of the stick and wheel for various model loadings and configurations. Recovery was generally attempted by rapid reversal of the rudder controls from full with to full against the spin. As previously mentioned, a few recoveries also attempted in which the rudder controls were only neutralized or in which the stick was moved from full back to full forward. Turns for recovery were measured from the time the controls were moved, or the parachute was opened, to the time the spin rotation ceased. The criterion for a satisfactory recovery from a spin for spin-tunnel models has been adopted as two turns or less, based primarily on the loss of altitude of the corresponding airplane during the recovery and the subsequent dive.

For recovery attempts in which the model struck the safety net before recovery could be effected because of the wandering or oscillatory motion of the model, the number of turns from the time the controls were moved to the time the model struck the safety net was recorded. This number indicated that the model required more turns to recover from the spin than shown, as for example, $> 3$. A $> 3$-turn recovery, however, does not necessarily indicate an improvement when compared to a $> 7$-turn recovery. The symbol $\infty$ is used on the charts to indicate that the model continued spinning indefinitely without any apparent tendency to recovery when controls were moved, or the parachute was opened, for recovery. When the model recovered without control movement when launched in a spinning attitude with the rudder controls set for the spin, the result was recorded as "No spin".

The testing technique for determining the optimum size of, and the towline length for, spin-recovery parachutes is described in detail in reference 3. For the present tests, the model was

launched with rotation into the tunnel with the rudder controls set full with the spin. The rudder controls were held with the spin for recovery attempts. The packed parachute was mounted on the upper surface of the outer wing (left wing in a right spin) in such a manner as to have no effect on the spin until opened. As requested by Northrop Aircraft, Inc., tests were made with the towline attached to the fixed portion of the wing between the elevons and the pitch flaps, and also with the towline attached to the wing tip. The points of towline attachment are shown in figure 9. On the airplane, the parachute should be packed within the wing structure in order to avoid affecting the spin and should be provided with a positive means of ejection in order to insure opening.

Balance tests.- The rolling and yawing moments of the model were measured on the six-component balance in the Langley free-flight tunnel. The free-flight tunnel is described in reference 4 and the balance is described in reference 5.

## PRECISION

Spin tests.- The results of the model spin tests presented herein are believed to be the true values given by the model within the following limits:

| | |
|---|---|
| $\alpha$, degree | $\pm 1$ |
| $\phi$, degree | $\pm 1$ |
| V, percent | $\pm 5$ |
| $\Omega$, percent | $\pm 3$ |
| Turns for recovery | $\pm\frac{1}{4}$ turn when obtained from motion-picture records; $\pm\frac{1}{2}$ turn when obtained by visual estimate |

The preceding limits may have been exceeded for certain spins in which it was difficult to control the model in the tunnel because of the wandering or oscillatory nature of the spin.

Comparison between model and airplane spin results (references 2 and 6) indicates that spin-tunnel results are not always in complete agreement with airplane spin results. In general, the models spun at a somewhat higher angle of attack, at a somewhat higher rate of descent, and at from 5° to 10° more outward sideslip than did the corresponding airplanes. The comparison made in reference 6, for 20 airplanes, showed that 80 percent of the models predicted

satisfactorily the corresponding airplane recovery characteristics and that 10 percent overestimated and 10 percent underestimated the corresponding airplane recovery characteristics.

Because of the impracticability of ballasting the model exactly, and because of inadvertent damage to the model during the tests, the measured weight and mass distribution of the model varied from the true scaled-down values within the following limits:

Weight, percent . . . . . 0 to 5 high
Center-of-gravity location, percent $\bar{c}$ . . . 0 forward to 2 rearward of normal

Moments of inertia:
- $I_X$, percent . . . . . 1 high to 22 high
- $I_Y$, percent . . . . . 1 low to 15 high
- $I_Z$, percent . . . . . 1 high to 17 high

The accuracy of measuring the weight and mass distribution of the model is believed to be within the following limits:

Weight, percent . . . . . ±1
Center-of-gravity location, percent $\bar{c}$ . . . . . ±1
Moments of inertia, percent . . . . . ±5

The controls were set with an accuracy of $\pm 1^{\circ}$.

Balance tests.- The rolling moments were measured with an accuracy of ±3 percent and the yawing moments were measured with an accuracy of ±1.5 percent.

## TEST CONDITIONS

Spin tests.- Numerous airplane conditions were considered in the preparation of the test program for the model and spin tests were performed on the model for conditions in which the airplane is generally expected to operate. In addition, variations in mass distribution and center-of-gravity location from those of flight test condition number 1 were tested in order to allow for the limits of accuracy of the computed full-scale and model values. Tests were also performed with the model simulating the configuration in which the airplane was believed to have been at the time of the crash in order to determine whether the crash may have resulted from the inability of the pilot to recover from a spin because of poor recovery characteristics of the airplane.

The conditions tested on the model are listed on table II. A pilot and approximately 70 gallons of fuel are carried for flight test condition number 1. Flight test condition number 1 was considered to be the basic loading condition and all changes in loading were made from this condition. The mass distribution and center-of-gravity location were independently changed for the tests to determine the effect of variations in mass distribution and center-of-gravity location. Lead weights were added to the model for flight test condition number 3 to simulate the addition of an observer and approximately 30 gallons of additional fuel. All other spin tests were performed with the model ballasted to represent flight test condition number 1. For the landing configuration the main and nose landing gear were installed and the landing flaps were deflected down 50°. The pitch flaps are interconnected with the landing flaps on the airplane in such a manner that when the landing flaps are deflected 50° down, both pitch flaps are deflected 27° up, and accordingly both pitch flaps were deflected up 27° on the model for the landing configuration. For tests to simulate the configuration in which the airplane was believed to have been at the time of the crash, the landing gear was retracted and the landing flaps were deflected 25° down. The pitch flaps were not deflected up for this configuration. The size of the fins required to simulate the fin effect of the propellers was computed by methods given in reference 7 and four fins were installed on each propeller nacelle as shown in figure 7.

Full-scale values of mass characteristics and mass parameters for the loadings tested on the model and for various loading conditions of the airplane are given on table III. The inertia parameters for the airplane loadings and for the loadings tested on the model are plotted on figure 10.

The control deflections for the model were obtained from information furnished by Northrop Aircraft, Inc. The airplane was equipped with a stick and wheel to move the elevons for longitudinal and lateral control, respectively. Movement of the stick moved both elevons either up or down together whereas turning the wheel moved one elevon up and the other elevon down. Although there was no stick, wheel, or rudder pedals in the model, control deflections are generally referred to herein in terms of stick, wheel, and rudder pedal positions. Various terms used for control deflection are defined as follows:

| | |
|---|---|
| Rudder controls with the spin . . . . . | Right rudder pedal forward for spin rotation to the pilot's right |
| Rudder controls against the spin . . . | Left rudder pedal forward for spin rotation to the pilot's right |
| Wheel with the spin . . . . . | Wheel turned to the right for spin rotation to the pilot's right |
| Wheel against the spin . . . . . | Wheel turned to the left for spin rotation to the pilot's right |

The control deflections used in the tests were as follows:

(a) Deflection of the elevons as presented in figure 11: It may be seen that a longitudinal movement of the stick deflects both elevons equally in the same direction (maximum of 24° up and 11° down with the wheel neutral). Turning the wheel moves one elevon up and the other down (maximum of 17° up and 13° down with the stick neutral). Elevon deflections for combined stick and wheel movements are also shown on figure 11.

(b) Elevons permitted to float freely between up and down stops independently of one another: The stops were installed in such a manner as to permit the elevons to float between the maximum up and down deflections obtained from movement of the stick when the wheel was fixed at full right, neutral, and full left. As indicated in figure 11, the right elevon was permitted to float between 36° up and 5° up and the left elevon was permitted to float between 9° up and 22° down for the tests with the wheel full right. Conversely, with the wheel full left, the right elevon was permitted to float between 9° up and 22° down and the left elevon was permitted to float between 36° up and 5° up. With the wheel neutral, both elevons were free to float between 24° up and 11° down.

(c) Deflection of the directional controls: The controls on one wing tip remain neutral when the controls on the other wing tip are deflected. For example, when the right rudder pedal is pushed full forward, the right scoop rudder deflects 69° down and the right pitch flap deflects 26° up whereas the left scoop rudder and pitch flap remain neutral. As previously mentioned, both pitch flaps are deflected up 27° for trim in pitch when the landing flaps are fully deflected. The pitch flap deflections for rudder control are

independent of, and are superimposed on, those obtained from landing flap deflection. For example, when the landing flaps are full down and the right rudder pedal is pushed full forward, the right pitch flap deflects from 27° up to 53° up and the left pitch flap remains at 27° up.

(d) Deflection of the landing flaps - 50° down.

Unless otherwise specifically indicated on the charts and tables, the cockpit was closed, the landing flaps were neutral, the pitch flaps deflected from 0° to 26° up, and the landing gear was retracted for the spin tests.

Balance tests.- The aerodynamic rolling and yawing moments of the complete model in the original configuration with landing gear retracted, landing flaps neutral, elevons neutral, and rudder controls neutral were measured for angles of attack between 20° and 60° at 0° yaw. The rudder controls on the right wing tip were then fully deflected as previously described for the spin tests, and the tests were repeated. These rudder controls were removed and a set of split rudders from the XB-35 model were installed and deflected ±60° on the same wing tip and the rolling and yawing moments were again measured. The increments in rolling and yawing moments contributed by the two types of rudder controls were then obtained from the results of these tests.

## RESULTS AND DISCUSSION

The results of the model spin tests are presented in terms of full-scale values on charts 1 through 13 and on table IV, and the results of the balance tests are presented on figure 12. Results from reference 1 for the XB-35 model are presented on chart 14 for comparative purposes. Although the N-9M model was apparently symmetrical, recoveries from spins to the pilot's left (left spins) were slightly slower than recoveries from spins for corresponding control configurations to the pilot's right (right spins) and the remaining tests were made to the pilot's left in order to obtain slightly conservative results. The results, however, are arbitrarily presented on the charts in terms of spins to the pilot's right.

### Clean Condition

Flight test condition number 1.- The results of the erect spin tests for flight test condition number 1 (loading point number 1 on table III and figure 10) with rudder controls with the spin are presented on chart 1. The spin for the normal control configuration

for spinning (stick full back and wheel neutral) was slightly oscillatory in pitch and roll. Recovery from this spin by reversal of the rudder controls was rapid. Setting the wheel against the spin was favorable. The model would not spin when the stick was forward or neutral. Two types of spin were obtained with the stick back. One spin had a radius too great to permit testing completely but it is believed that recovery from this spin would have been satisfactory. Recovery from the second type of spin was satisfactory. Setting the wheel with the spin was adverse and, in general, the model would not recover.

Tests were also made in which the elevons were allowed to float freely between the maximum up and down deflections obtained from stick movement when the wheel was fixed at full against the spin, neutral, and full with the spin. Recoveries were attempted by reversing the rudder controls. The results of these tests were generally similar to those obtained from corresponding spins with the stick full back and the results are not presented on the chart. Because of lack of detail in the elevon balance, of lack of individual ballasting of the elevons, of centrifugal forces, and of possible scale effects, the results are only rough indications of the results that may be obtained on the airplane with the stick free.

The results of recovery tests made by neutralizing the rudder controls are also presented on chart 1. The results indicate that in general the rudder controls on the airplane should be moved to full against the spin for optimum spin recovery.

Recoveries were also attempted by moving the stick from full back to full forward with the wheel fixed at full against the spin, neutral, and full with the spin and with the rudder controls maintained full with the spin. Chart 1 shows that satisfactory recoveries were obtained by this technique when the wheel was full against the spin or neutral but the model continued spinning when the wheel was with the spin.

Because of the unusual design of the airplane and of the rudder controls, tests were also made in which the model was launched into the tunnel with the rudder controls neutral and against the spin. The results of these tests are presented on chart 2. The model continued spinning with the wheel with the spin even when launched with the rudder controls against the spin thereby confirming the adverse effect of turning the wheel with the spin previously noted when attempting recoveries from rudder-with spins.

Mass distribution and center-of-gravity variations.- The results of tests made with moderate variations in the moments of inertia of

(loading point number 3 on table III and fig. 10) are presented on chart 7. The change in loading caused an adverse effect in that recoveries could not now be obtained by reversal of the rudder controls from spins with the stick full back. An analysis of the results indicates that the adverse effect of flight test condition number 3 loading on recovery characteristics with the stick back can probably be attributed to a forward movement of the center of gravity associated with this loading as indicated on table III.

Inverted spins.- Test results for inverted spins with the model in flight test condition number 1 are presented on chart 8. The order used for presenting the data for inverted spins is different from that used for erect spins. The case for established inverted spins "controls crossed" (right rudder pedal forward and wheel left for a spin to the pilot's right) is presented to the right of the chart and stick back is presented at the bottom. When the controls are crossed in the established inverted spin, the differential deflection of the elevons aids the rolling motion; when controls are together, the differential deflection of the elevons opposes the rolling motion. The angle of wing tilt $\phi$ on the chart is given as up or down relative to the ground.

The results show that spins could be obtained only with the rudder and wheel crossed with the stick neutral or forward, and that the model would not recover from these spins when the rudder controls alone were reversed. It appears, however, that satisfactory recovery could be obtained from these spins by neutralizing the stick and wheel in conjunction with reversal of the rudder controls.

## Landing Configuration

The results of the tests with the model in the landing configuration for flight test condition number 1 are presented on chart 9. An adverse effect on recovery characteristics was noted for the landing configuration in that the model would not now recover from spins obtained with the stick back when the rudder controls were reversed.

Tests were next performed to ascertain whether the adverse effect of the landing configuration was caused by the initial $27^{\circ}$ up deflection of the pitch flaps associated with the landing configuration. For these tests, the pitch flaps were initially set at $0^{\circ}$. The results of these tests were generally similar to those obtained for the landing configuration thereby indicating that the adverse effect was caused by either the landing flaps or the landing gear. On the basis of results of tests of other spin-tunnel models, it appears that the adverse effect on recovery characteristics was caused by the deflection of the landing flaps rather than by the extension of the landing gear.

the model are presented on charts 3 and 4. The changes consisted of alternately increasing the mass distribution along the wings ($I_X$ and $I_Z$ increased 20 percent of $I_X$), decreasing the mass distribution along the longitudinal axis ($I_Y$ and $I_Z$ decreased 12 percent of $I_Y$), and increasing the mass distribution along the longitudinal axis ($I_Y$ and $I_Z$ increased 30 percent of $I_Y$). These loadings are represented by points 4, 5, and 6, respectively, on table III and figure 10. The results indicate that there was no appreciable effect of the foregoing moment-of-inertia changes on the general spin and recovery characteristics of the model.

The results of tests made with the center of gravity forward 5 percent of the mean aerodynamic chord or rearward 3 or 6 percent of the mean aerodynamic chord are presented on charts 5 and 6. These loadings are represented by points 7, 8, and 9, respectively, on table III and figure 10. With the center of gravity forward, the model would not spin when the stick was full forward but would not recover by reversal of the rudder controls when the stick was full back. It appears that movement of the stick full forward in conjunction with movement of the rudder controls against the spin, however, will give satisfactory recovery from spins with the stick full back when the center of gravity is forward. With the center of gravity either 3 or 6 percent of the mean aerodynamic chord rearward of normal, spins were obtained for all control configurations, except when the stick was full back and the wheel was neutral. A condition of spinning equilibrium apparently could not be obtained for center-of-gravity rearward loading when the stick was back and the wheel was neutral; after being launched with initial spinning rotation, the model began oscillating in pitch, the amplitude of the oscillation increased, and the model finally pitched inverted and stopped rotating. The model then went into a dive but continued oscillating in pitch until it hit the safety net. Recoveries from spins with the wheel with the spin were still unsatisfactory when the center of gravity was 3 percent of the mean aerodynamic chord rearward of normal, but recoveries from all control configurations were satisfactory when the center of gravity was 6 percent of the mean aerodynamic chord rearward of normal. The difference in recovery results for various center-of-gravity locations can apparently be explained, in part, by the differences in angles of attack obtained for various center-of-gravity locations and by the balance results, subsequently presented, on the basis of the rolling-moment increment associated with reversal of rudder controls at different angles of attack. For all center-of-gravity locations, recoveries were more rapid when the wheel was against the spin, than when the wheel was with the spin.

Flight test condition number 3.- The results of tests made with the model ballasted to represent flight test condition number 3

## Airplane Configuration at Time of Crash

The results of the tests performed with the model simulating the configuration in which the N-9M airplane is believed to have been at the time of the crash (landing flaps 25° down) are presented on chart 10. These results are generally similar to those for the landing configuration and show that the model did not recover from the spin in the normal control configuration for spinning when the rudder controls were reversed to against the spin. Results of check tests for the clean configuration performed immediately following the tests with the model simulating the crash configuration substantiated the adverse effect of either partial or full landing flap deflection.

The possibility that the first N-9M airplane may have crashed because of failure to recover from a spin is indicated by the results on chart 10. It may be seen that in order to obtain recovery from a spin in the normal control configuration for spinning, the pilot, in conjunction with reversal of the rudder controls, should push the stick forward of neutral and/or turn the wheel against the spin. If the pilot did not follow the previously mentioned recovery technique, it is possible that the airplane may have spun in.

## Equivalent Fin Effect of Propellers

The model was in the clean condition and ballasted to represent flight test condition number 1 for the tests performed to determine the equivalent fin effect of windmilling propellers. The results of these tests are presented on chart 11 and are generally similar to those obtained without the propeller fin area thereby indicating that the fin effect of the propellers was not sufficiently large to appreciably effect the spin and recovery characteristics of the model.

## Slats Installed

The results of tests made with 20-percent and with 35-percent span leading-edge slats installed on the model for flight test condition number 1 are presented on chart 12. The installation of either set of slats was detrimental. Recoveries by reversal of the rudder controls were slow or impossible for all spins obtained. In general, with slats installed, spins could be obtained except with the wheel against the spin and the stick forward.

## Horizontal Area Installed Rearward of Model

The results of tests made with horizontal area equal to 2 percent of the wing area installed on a boom rearward of the center of the model (fig. 5) for flight test condition number 1 are presented on chart 13. The results show that the addition of the horizontal area did not appreciably effect the spin and recovery characteristics of the model.

## Recommended Recovery Technique

It was noted throughout the test program that there was a general trend of recovery characteristics for all conditions tested. For certain control configurations the model would not spin whereas for others it would not recover. On the basis of these results, the following technique for recovery from spins is recommended for all conditions of the airplane:

(a) Erect spins.- Rapidly reverse the rudder pedals to full against the spin, and at the same time move the stick forward and turn the wheel full against the spin; in moving the stick forward, care should be exercised to avoid excessive rates of acceleration in the ensuing dive. If a spin is entered with landing flaps deflected, the flaps should be neutralized and recovery attempted immediately.

(b) Inverted spins.- Rapidly reverse the rudder pedals and neutralize the stick and wheel.

## Spin-Recovery Parachutes

Spin-recovery parachute tests were made with the model in the clean condition and ballasted to represent flight test condition number 1. The towline was attached either to the fixed portion of the wing between the elevons and the pitch flaps or to the wing tip as shown on figure 9. The results of these tests are presented on table IV. It was found that when the towline was attached to the fixed portion of the wing between the elevons and the pitch flaps and was short enough so that the parachute would not foul the propeller, the parachute frequently fluttered in the wake of the wing without opening properly and thus was ineffective in producing recovery. As it was understood that the propellers could be locked on the airplane, it appeared that longer towlines could be used and accordingly various towline lengths were tested for both points of towline attachment.

Comparison of N-9M and XB-35 Model Spin Test Results

As previously mentioned, a comparison of the results of the spin and recovery tests of the N-9M and XB-35 models was made to determine whether the differences in rudder controls would cause a difference in the spin and recovery characteristics of the models. The rudder controls on both models were located along the trailing edge of the wing at the wing tips and were of approximately the same span, but scoop rudders and pitch flaps were used on the N-9M model whereas split rudders were employed on the XB-35 model (fig. 6). The results obtained with a model of the XB-35 airplane (reference 1) in the clean condition, normal loading are presented on chart 14. A comparison of these results with those for the N-9M model on charts 1 and 2 indicates that the spin and recovery characteristics of the two models are not similar. When the rudder controls were with the spin, the XB-35 model would spin only with the wheel with the spin and the stick either neutral or back. When the rudder controls were deflected against the spin, however, the XB-35 model would spin for all stick and wheel positions except wheel full against the spin and stick either neutral or forward. The N-9M model, on the other hand, would spin for almost all stick and wheel positions when the rudder controls were with the spin but would spin for only a few control configurations when the rudder controls were against the spin. Optimum recovery was obtained on the XB-35 model by maintaining the rudder controls with the spin whereas on the N-9M model, optimum recovery was obtained by moving the rudder controls against the spin.

As previously mentioned, tests were performed in the free-flight tunnel to measure the increments in yawing- and rolling-moment coefficients contributed by the two types of rudder controls in an attempt to ascertain the cause of the differences in the spin and recovery characteristics of the N-9M and XB-35 models. The results of these tests are summarized on figure 12. It can be seen that for the angle-of-attack range tested (20° to 60°) there was little difference in the increment of yawing-moment coefficient contributed by the two types of rudder controls. The increments in rolling-moment coefficient contributed by the two types of rudder controls, however, were quite different. Throughout the angle-of-attack range tested, the XB-35 rudder controls contributed an incremental rolling-moment coefficient which was approximately 0.01 greater negatively than that contributed by the N-9M rudder controls. If the rudder controls are considered to be deflected with the spin (to give a prospin yawing moment), it can be seen that the XB-35 rudder controls set up an antispin rolling moment which, for the mass distribution of the XB-35 and N-9M models (reference 8), tends to prevent the spin. Up to an angle of attack of approximately 34°, the N-9M rudder controls also set up an antispin rolling moment but

Satisfactory recoveries by parachute action alone were obtained from spins for the normal control configuration for spinning with a 5-foot-diameter (full scale) parachute on either a 15-foot or a 30-foot (full scale) towline attached to the fixed portion of the wing between the elevons and the pitch flaps. Recoveries from spins with the wheel with the spin, however, were unsatisfactory when a 5-foot-diameter parachute was used and it was necessary to use an 8.8-foot-diameter (full scale) parachute on a 30-foot (full scale) towline in order to obtain satisfactory recoveries from demonstration spins when the wheel was with the spin. Results of airplane spin tests have indicated that the stick or wheel may float with the spin when the airplane is spinning and it is recommended therefore that an 8.8-foot-diameter parachute on a 30-foot towline be used on the airplane when the towline is attached to the fixed portion of the wing between the elevons and the pitch flaps.

When the towline was attached to the wing tip, satisfactory recovery was obtained from spins at the normal control configuration for spinning when a 5-foot-diameter (full scale) parachute was opened on the end of either 10-foot, 15-foot, or 30-foot (full scale) towlines. As was the case when the parachute was attached to the fixed portion of the wing between the elevons and the pitch flaps, however, recoveries from spins with the wheel with the spin were unsatisfactory when a 5-foot-diameter parachute was used. Satisfactory recoveries were obtained from spins when the wheel was with the spin when a 7-foot-diameter (full scale) parachute was attached to the outboard wing tip with either a 10- or a 30-foot (full scale) towline. It thus appears desirable that a 7-foot-diameter parachute be used when the towline is attached to the outboard wing tip.

An examination of the wreckage of the airplane after the crash indicated that a spin-recovery parachute had been opened prior to the crash. This parachute had a diameter of 5.5 feet and was attached to the fixed portion of the wing between the elevons and the pitch flaps with a 10-foot towline. Although this parachute arrangement was not specifically tested on the model, it is believed that it would probably give satisfactory recovery from a spin on the airplane with the wheel neutral and the stick full back if the airplane had sufficient altitude to effect recovery when the parachute was opened. If, however, the wheel were with the spin or the stick were not full back when the parachute was opened, the model tests indicate that a 5.5-foot parachute would not have been large enough to effect recovery from the spin.

this moment is appreciably less than that set up by the XB-35 rudder controls. At angles of attack greater than 34°, however, the N-9M rudder controls set up a prospin rolling moment which tends to maintain the spin. If the rudder controls are considered to be deflected against the spin (to give an antispin yawing moment), figure 12 indicates that the XB-35 rudder controls give an adverse prospin rolling moment whereas the N-9M rudder controls, at angles of attack greater than 34°, set up a favorable antispin rolling moment. The results of the balance tests thus appear to offer an explanation for the differences in the spin and recovery characteristics of the two models.

## Control Forces

The discussion of the results so far has been based on control effectiveness alone without regard to the forces required to move the controls for recovery. For all tests, as previously mentioned, sufficient force was applied to the controls to move them fully and rapidly. Sufficient force must be applied to the airplane controls to move them in a similar manner in order for the airplane and model results to be comparable.

## CONCLUSIONS AND RECOMMENDATIONS

Based on the results of spin tests of a 1/20-scale model of the Northrop N-9M airplane, the following conclusions and recommendations regarding the spin and recovery characteristics of the airplane at a spin altitude of 15,000 feet are made:

1. A slightly oscillatory spin with a moderate rate of descent will be obtained for the normal control configuration for spinning when the airplane is in flight test condition number 1. Recovery from this spin by rapid full reversal of the rudder pedals will probably be satisfactory. Moving the stick full forward or turning the wheel against the spin will expedite recovery whereas turning the wheel with the spin will have an adverse effect on recovery.

2. Changes in moments of inertia of the order of ±20 percent will have no appreciable effect on the spin and recovery characteristics of the airplane.

3. Forward movements of the center of gravity of the order of 5 percent of the mean aerodynamic chord will have an adverse effect on recoveries from spins with the stick full back. The recovery

characteristics will be satisfactory for rearward movements of the center of gravity of the order of 5 percent of the mean aerodynamic chord.

4. To obtain satisfactory recoveries from spins for flight test condition number 3, it will be necessary to move the stick forward.

5. For optimum recovery from erect spins for all configurations and loading conditions of the airplane, rapidly and fully reverse the rudder pedals and at the same time move the stick well forward of neutral and turn the wheel full against the spin.

6. Deflection of the landing flaps will be adverse to spin recovery. The flaps should be neutralized and recovery attempted immediately upon entering a spin with flaps deflected.

7. Recoveries from inverted spins should be attempted by rapidly reversing the rudder pedals and neutralizing the stick and wheel.

8. A 7-foot-diameter spin-recovery parachute having a drag coefficient of 0.7 attached to the outboard wing tip or an 8.8-foot-diameter spin-recovery parachute attached to the fixed portion of the wing between the elevons and the pitch flaps will effect satisfactory recoveries from demonstration spins for flight test condition number 1. Either a 10-foot or a 30-foot towline may be used with the 7-foot parachute but a 30-foot towline should be used with the 8.8-foot parachute.

9. It appears that the first N-9M airplane may have crashed because of failure to recover from a spin.

Langley Memorial Aeronautical Laboratory
National Advisory Committee for Aeronautics
Langley Field, Va.

George F. MacDougall, Jr.
Aeronautical Engineer

Jacob H. Lichtenstein
Aeronautical Engineer

Approved: for Thomas A. Harris
Hartley A. Soulé
Chief of Stability Research Division

[redacted]

## REFERENCES

1. Kamm, Robert W. and Pepoon, Philip W.: Spin-Tunnel Tests of a 1/57.33-Scale Model of the Northrop XB-35 Airplane. NACA MR, Army Air Forces, 1944.

2. Zimmerman, C. H.: Preliminary Tests in the N.A.C.A. Free-Spinning Wind Tunnel. NACA Rep. No. 557, 1936.

3. Seidman, Oscar and Kamm, Robert W.: Antispin-Tail-Parachute Installations. NACA RB, Feb. 1943.

4. Shortal, Joseph A. and Osterhout, Clayton J.: Preliminary Stability and Control Tests in the NACA Free-Flight Wind Tunnel and Correlation with Full-Scale Flight Tests. NACA TN No. 810, 1941.

5. Shortal, Joseph A. and Draper, John W.: Free-Flight-Tunnel Investigation of the Effect of the Fuselage Length and the Aspect Ratio and Size of the Vertical Tail on Lateral Stability and Control. NACA ARR No. 3D17, 1943.

6. Seidman, Oscar and Neihouse, A. I.: Comparison of Free-Spinning Wind-Tunnel Results with Corresponding Full-Scale Spin Results. NACA MR, Dec. 7, 1938.

7. Ribner, Herbert S.: Formulas for Propellers in Yaw and Charts of the Side-Force Derivative. NACA ARR No. 3E19, 1943.

8. Neihouse, A. I.: A Mass-Distribution Criterion for Predicting the Effect of Control Manipulation on the Recovery from a Spin. NACA MR, June 4, 1941.

TABLE I

DIMENSIONAL CHARACTERISTICS OF THE NORTHROP N-9M AIRPLANE

| | |
|---|---|
| Length over all, feet | 17.78 |
| Propellers, type | Pusher |
| Propellers, diameter, feet | 7.00 |
| Propellers, number | 2 |
| Propellers, blades on each | 2 |
| **Wing:** | |
| Span, feet | 60.00 |
| Area, square feet | 490.0 |
| Section, root | NACA-65,3-019 |
| Section, tip | NACA-65,3-018 |
| Twist, tip leading edge down, degrees | 4.0 |
| Dihedral, 25 percent chordline, degrees | 2.0 |
| Aspect ratio | 7.4 |
| Taper ratio | 4.0 |
| Sweepback, 25 percent chordline, degrees | 21.9 |
| Mean aerodynamic chord, inches | 109.8 |
| Leading edge of mean aerodynamic chord rearward of leading edge of root-chord, inches | 69.7 |
| **Elevons:** | |
| Chord rearward of hinge line, feet | 1.57 |
| Span, percent of wing span | 33.6 |
| Area rearward of hinge line, percent of wing area | 6.5 |
| **Pitch flaps:** | |
| Chord, percent of wing chord | 24.2 |
| Span, percent of wing span | 23.6 |
| Area rearward of hinge line, percent of wing area | 3.1 |
| **Scoop rudders:** | |
| Span, percent of wing span | 21.5 |
| **Landing flaps:** | |
| Span, percent of wing span | 35.3 |
| Total area, percent of wing area | 10.1 |

NATIONAL ADVISORY COMMITTEE FOR AERONAUTICS

[redacted]

TABLE II

CONDITIONS OF THE 1/20-SCALE MODEL OF THE NORTHROP N-9M AIRPLANE

INVESTIGATED IN THE 20-FOOT FREE-SPINNING TUNNEL

| No. | Configuration | Loading | Type of spin | Landing gear | Landing flaps | Pitch flap deflection | Slots | Spin recovery parachute attached | Data presented on |
|---|---|---|---|---|---|---|---|---|---|
| 1 | Clean | Flight test condition number 1 | Erect | Retracted | Neutral | 0° to 26° up | None | None | Chart 1 |
| 2 | Clean, rudder controls neutral | ----------do---------- | --do-- | ---do--- | ---do--- | -----do----- | -do- | -do- | Chart 2 |
| 3 | Clean, rudder controls against the spin | ----------do---------- | --do-- | ---do--- | ---do--- | -----do----- | -do- | -do- | Chart 2 |
| 4 | Clean | $I_X$ and $I_Z$ increased 20 percent of $I_Y$ for flight test condition number 1 | --do-- | ---do--- | ---do--- | -----do----- | -do- | -do- | Chart 3 |
| 5 | Clean | $I_X$ and $I_Z$ decreased 12 percent of $I_Y$ for flight test condition number 1 | --do-- | ---do--- | ---do--- | -----do----- | -do- | -do- | Chart 4 |
| 6 | Clean | $I_X$ and $I_Z$ increased 30 percent of $I_Y$ for flight test condition number 1 | --do-- | ---do--- | ---do--- | -----do----- | -do- | -do- | Chart 4 |
| 7 | Clean | Center of gravity 5 percent M.A.C. forward of the normal location for flight test condition number 1 | --do-- | ---do--- | ---do--- | -----do----- | -do- | -do- | Chart 5 |
| 8 | Clean | Center of gravity 3 percent M.A.C. rearward of the normal location for flight test condition number 1 | --do-- | ---do--- | ---do--- | -----do----- | -do- | -do- | Chart 6 |
| 9 | Clean | Center of gravity 6 percent M.A.C. rearward of the normal location for flight test condition number 1 | --do-- | ---do--- | ---do--- | -----do----- | -do- | -do- | Chart 6 |
| 10 | Clean | Flight test condition number 3 | --do-- | ---do--- | ---do--- | -----do----- | -do- | -do- | Chart 7 |
| 11 | Clean | Flight test condition number 1 | Inverted | ---do--- | ---do--- | -----do----- | -do- | -do- | Chart 8 |
| 12 | Landing | ----------do---------- | Erect | Extended | 50° down | 27° up to 53° up | -do- | -do- | Chart 9 |
| 13 | Landing | ----------do---------- | --do-- | ---do--- | ---do--- | 0° to 26° up | -do- | -do- | Chart 9 |
| 14 | At time of crash | ----------do---------- | --do-- | Retracted | 25° down | -----do----- | -do- | -do- | Chart 10 |
| 15 | Equivalent propeller fin area added | ----------do---------- | --do-- | ---do--- | Neutral | -----do----- | -do- | -do- | Chart 11 |
| 16 | 20-percent span slats installed | ----------do---------- | --do-- | ---do--- | ---do--- | -----do----- | Open | -do- | Chart 12 |
| 17 | 35-percent span slats installed | ----------do---------- | --do-- | ---do--- | ---do--- | -----do----- | -do- | -do- | Chart 12 |
| 18 | Horizontal area installed | ----------do---------- | --do-- | ---do--- | ---do--- | -----do----- | None | -do- | Chart 13 |
| 19 | Parachute installed | ----------do---------- | --do-- | ---do--- | ---do--- | -----do----- | -do- | Between elevons and pitch flaps | Table IV |
| 20 | Parachute installed | ----------do---------- | --do-- | ---do--- | ---do--- | -----do----- | -do- | At wing tip | Table IV |

[redacted]

NATIONAL ADVISORY
COMMITTEE FOR AERONAUTICS

TABLE III - MASS CHARACTERISTICS AND INERTIA PARAMETERS FOR VARIOUS LOADINGS POSSIBLE ON THE NORTHROP N-9M AIRPLANE AND FOR THE LOADINGS TESTED ON THE 1/20-SCALE MODEL

[redacted]

[Model values are presented in terms of full-scale values]

| No. | Loading | Weight (pounds) | M Sea level | M 15,000 feet | Center of gravity location $\frac{x}{c}$ | Center of gravity location $\frac{z}{c}$ | Moments of inertia about center of gravity $I_X$ (slug-ft$^2$) | Moments of inertia about center of gravity $I_Y$ (slug-ft$^2$) | Moments of inertia about center of gravity $I_Z$ (slug-ft$^2$) | Inertia parameters $\frac{I_X - I_Y}{mb^2}$ | Inertia parameters $\frac{I_Y - I_Z}{mb^2}$ | Inertia parameters $\frac{I_Z - I_X}{mb^2}$ |
|---|---|---|---|---|---|---|---|---|---|---|---|---|
| | Airplane Values | | | | | | | | | | | |
| 1 | Flight test condition number 1 | 6517 | 2.90 | 4.61 | 0.29 | -0.04 | 19045 | 2288 | 21099 | 230 x 10-4 | -258 x 10-4 | 28 x 10-4 |
| 2 | Flight test condition number 2 | 6717 | 2.99 | 4.75 | 0.27 | -0.04 | 19058 | 2574 | 21373 | 219 | -250 | 31 |
| 3 | Flight test condition number 3 | 6917 | 3.08 | 4.89 | 0.25 | -0.04 | 19051 | 2879 | 21684 | 209 | -243 | 34 |
| | Model Values | | | | | | | | | | | |
| 1 | Flight test condition number 1 | 6526 | 2.91 | 4.62 | 0.29 | -0.04 | 19138 | 2274 | 21298 | 231 | -260 | 29 |
| 3 | Flight test condition number 3 | 6914 | 3.08 | 4.89 | 0.25 | -0.04 | 19131 | 2919 | 21949 | 210 | -246 | 36 |
| 4 | $I_Y$ and $I_Z$ increased 20 percent of $I_X$ for flight test condition number 1 | 6526 | 2.91 | 4.62 | 0.29 | -0.04 | 22951 | 2274 | 25111 | 283 | -312 | 29 |
| 5 | $I_Y$ and $I_Z$ decreased 12 percent of $I_Y$ for flight test condition number 1 | 6526 | 2.91 | 4.62 | 0.29 | -0.04 | 19138 | 1999 | 21023 | 235 | -261 | 26 |
| 6 | $I_Y$ and $I_Z$ increased 30 percent of $I_Y$ for flight test condition number 1 | 6768 | 3.01 | 4.78 | 0.29 | -0.04 | 19132 | 2967 | 21997 | 214 | -251 | 37 |
| 7 | Center of gravity 5 percent of the mean aerodynamic chord forward of the normal location for flight test condition number 1 | 6694 | 2.98 | 4.73 | 0.24 | -0.04 | 19132 | 2679 | 21709 | 221 | -254 | 33 |
| 8 | Center of gravity 3 percent of the mean aerodynamic chord rearward of the normal location for flight test condition number 1 | 6675 | 2.96 | 4.71 | 0.32 | -0.04 | 19132 | 2059 | 21089 | 229 | -255 | 26 |
| 9 | Center of gravity 6 percent of the mean aerodynamic chord rearward of the normal location for flight test condition number 1 | 6538 | 2.91 | 4.62 | 0.35 | -0.04 | 19132 | 1729 | 20758 | 238 | -260 | 22 |

[redacted]

NATIONAL ADVISORY COMMITTEE FOR AERONAUTICS

TABLE IV

SPIN RECOVERY PARACHUTE DATA OBTAINED WITH THE

1/20-SCALE MODEL OF THE NORTHROP N-9M AIRPLANE

[Flight test condition number 1 (loading point number 1 on table III and fig. 10); drag coefficient of parachute is 0.7; rudder controls maintained full with the spin during the recovery attempt; recovery attempted by parachute action alone; right erect spins]

[redacted]

| Parachute diameter, full scale (ft) | Towline length, full scale (ft) | Turns for recovery | | | |
|---|---|---|---|---|---|
| | | Stick full back | | Stick neutral | |
| | | Wheel neutral | Wheel with the spin | Wheel neutral | Wheel with the spin |
| Parachute towline attached to outboard wing between pitch flap and elevon | | | | | |
| 5.0 | 2.5 | $\infty$ $\infty$ | | | |
| 5.0 | 15.0 | 1, $1\frac{1}{4}$, $1\frac{1}{2}$ | $\infty$ $\infty$ | | |
| 5.0 | 30.0 | 1, $1\frac{1}{2}$, $1\frac{1}{2}$ | $\infty$ $\infty$ | >3 | $\infty$, $\infty$ |
| 7.0 | 2.5 | $\frac{3}{4}$, $3\frac{1}{2}$, $\infty$ | $\infty$ $\infty$ | $\frac{3}{4}$, $1\frac{1}{4}$ | $\infty$ $\infty$ |
| 7.0 | 15.0 | $\frac{3}{4}$, $1\frac{1}{2}$ | $\infty$ $\infty$ | $1\frac{1}{4}$, 2 | $\infty$ |
| 7.0 | 30.0 | $\frac{1}{2}$, $\frac{1}{2}$, $\frac{3}{4}$ | $1\frac{1}{2}$, $1\frac{3}{4}$, 2 | $\frac{1}{2}$, $\frac{3}{4}$, $1\frac{1}{2}$ | $\infty$ |
| 8.8 | 2.5 | $\frac{1}{2}$, 3, $\infty$ | [a]3, [a]9 | $\frac{1}{2}$, $1\frac{1}{2}$ | $\infty$ $\infty$ |
| 8.8 | 15.0 | $\frac{1}{2}$, $\frac{3}{4}$ | $1\frac{1}{4}$, $1\frac{1}{2}$, $>2\frac{1}{2}$ | $\frac{1}{4}$, 1 | $1\frac{1}{2}$, $2\frac{1}{4}$, 4 |
| 8.8 | 30.0 | $\frac{1}{2}$, $\frac{1}{2}$, $\frac{1}{2}$ | $1\frac{1}{2}$, $1\frac{1}{2}$ | $\frac{1}{2}$, 1, $1\frac{1}{4}$ | $1\frac{1}{4}$, 2, 2 |
| Parachute towline attached to outboard wing tip | | | | | |
| 5.0 | 10.0 | $\frac{3}{4}$, 1, 1 | $2\frac{1}{2}$, $2\frac{1}{2}$, $3\frac{1}{2}$ | $1\frac{1}{2}$, >3 | $\infty$ |
| 5.0 | 15.0 | $\frac{3}{4}$, $\frac{3}{4}$, $1\frac{1}{4}$ | $\infty$ $\infty$ | [a]$>3\frac{1}{2}$ | $\infty$ $\infty$ |
| 5.0 | 30.0 | $\frac{1}{2}$, 1, $1\frac{1}{4}$ | 2, $2\frac{1}{4}$, [a]>3 | 1, $1\frac{1}{2}$, >2 | $\infty$ $\infty$ |
| 7.0 | 10.0 | $\frac{1}{2}$, $\frac{3}{4}$, $\frac{3}{4}$ | $1\frac{1}{2}$, $1\frac{1}{2}$, $1\frac{1}{2}$ | 1, 1 | 1, $1\frac{3}{4}$ |
| 7.0 | 30.0 | $\frac{1}{2}$, $\frac{1}{2}$ | $1\frac{1}{4}$, $1\frac{1}{2}$, $1\frac{3}{4}$ | $\frac{1}{2}$, 1, 1 | 1, $1\frac{1}{4}$ |

[a]Visual estimate. [redacted]

NATIONAL ADVISORY COMMITTEE FOR AERONAUTICS

CHART 1.- SPIN AND RECOVERY CHARACTERISTICS OF THE $\frac{1}{20}$-SCALE MODEL OF THE NORTHROP M-9M AIRPLANE IN FLIGHT TEST CONDITION NUMBER 1

[Loading point number 1 on table III and figure 10; recovery attempted by rapid full reversal of the rudder controls except as indicated (recovery attempted from, and steady-spin data presented for, rudder-full-with spins); right erect spin]

[redacted]

| | Wheel full left | Wheel one-half left | Wheel neutral | Wheel one-half right | Wheel full right |
|---|---|---|---|---|---|
| | Two types of spin | | | | Two types of spin |
| Stick full back | [a] | | [d] 44/37 \| 3U/4D<br>188 \| 0.21<br>$\frac{1}{2}$, $\frac{1}{2}$<br>[e] $\frac{1}{4}$, [e] $\frac{1}{4}$<br>[c] $\frac{1}{4}$, [c] 1 | | [d] 38 \| 2U/2D; [d] 49/41 \| 1U/2D<br>176 \| 0.31; 163 \| 0.34<br>∞; $2\frac{1}{2}$, $2\frac{1}{2}$<br>[be] $>3\frac{1}{2}$<br>[c] ∞ |
| | 213 \| 0.21<br>[b] 2<br>[c] $\frac{1}{4}$, [c] $\frac{1}{2}$ | | | | |
| Stick neutral | No spin | No spin | Two types of spin<br>[d] 34/21 \| 2U/1D; [d] 27/20 \| 3U/2D<br>220 \| 0.37; 204 \| 0.38<br>2<br>[e] $>2\frac{1}{2}$; ∞ | [d] 33/26 \| 1U/2D<br>201 \| 0.37<br>∞ | [d] 39/32 \| 1U/1D<br>179 \| 0.35<br>∞<br>[e] ∞ |
| Stick one-half forward | | | No spin | | |
| Stick full forward | No spin | | No spin | | [d] 32 \| 2U/1D<br>188 \| 0.39<br>∞<br>[e] ∞ |

[redacted]

[a]Radius of spin too great to permit testing completely.
[b]Visual estimate.
[c]Recovery attempted by movement of stick full forward.
[d]Oscillatory spin; range of values or average value given.
[e]Recovery attempted by neutralization of rudder controls.

Model values converted to corresponding full-scale values.
U inner wing up
D inner wing down

| | |
|---|---|
| $\alpha$ (deg) | $\phi$ (deg) |
| V (fps) | $\Omega$ (rps) |
| Turns for recovery | |

NATIONAL ADVISORY COMMITTEE FOR AERONAUTICS

CHART 2.- SPIN CHARACTERISTICS OF THE $\frac{1}{20}$-SCALE MODEL OF THE NORTHROP N-9M AIRPLANE IN FLIGHT TEST CONDITION NUMBER 1 WITH RUDDER CONTROLS NEUTRAL AND AGAINST THE SPIN

[Loading point number 1 on table III and figure 10; rudder controls as indicated; right erect spins]

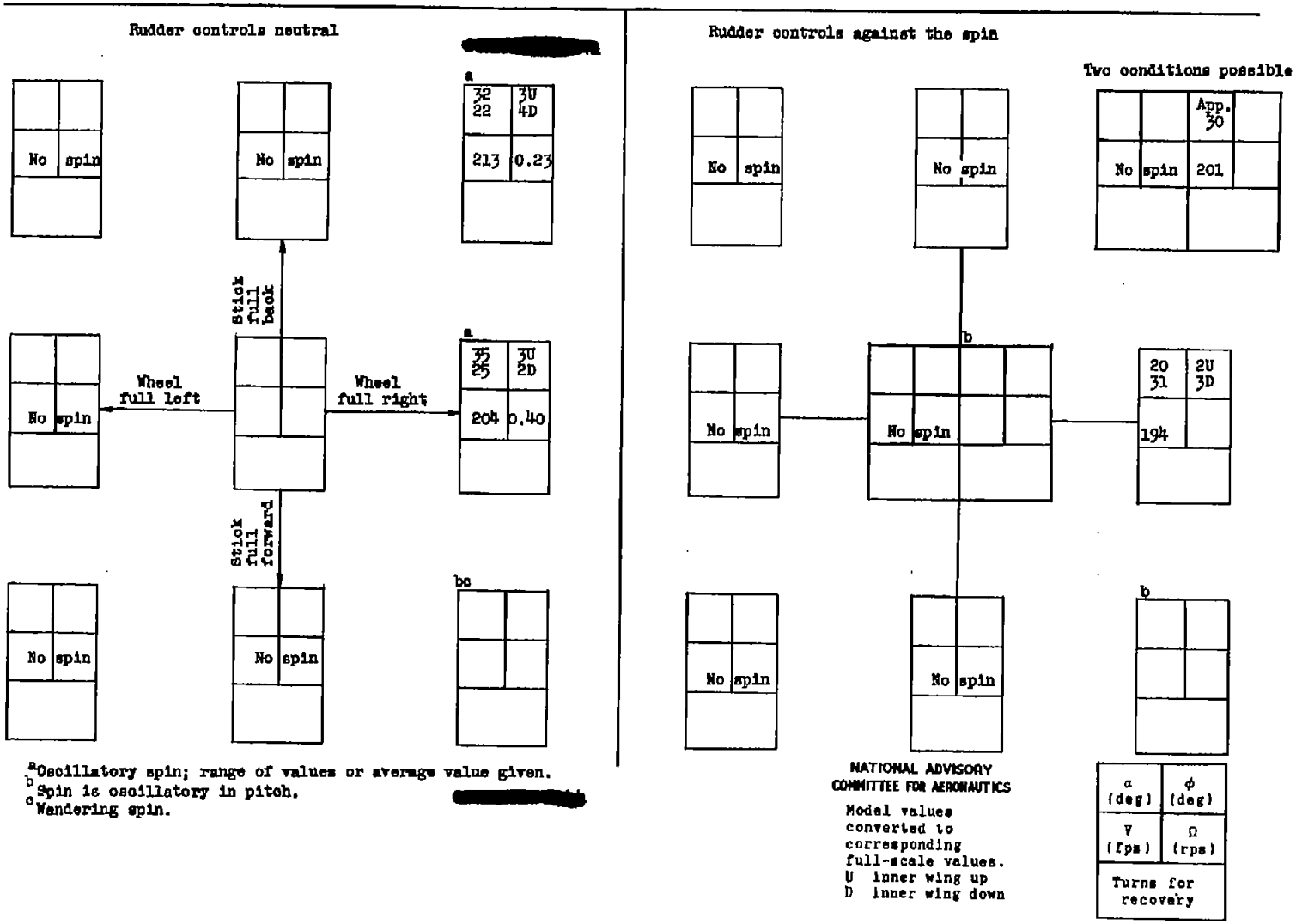


[redacted]

[a]Oscillatory spin; range of values or average value given.
[b]Spin is oscillatory in pitch.
[c]Wandering spin.

NATIONAL ADVISORY COMMITTEE FOR AERONAUTICS

Model values converted to corresponding full-scale values.
U inner wing up
D inner wing down

CHART 3.- SPIN AND RECOVERY CHARACTERISTICS OF THE $\frac{1}{20}$-SCALE MODEL OF THE NORTHROP N-9M AIRPLANE WITH MASS DISTRIBUTION INCREASED ALONG THE WINGS

[Flight test condition number 1 with $I_X$ and $I_Z$ increased 20 percent of $I_X$ (loading point number 4 on table III and figure 10); recovery attempted by rapid full reversal of the rudder controls (recovery attempted from, and steady-spin data presented for, rudder-full-with spins); right erect spins]

[redacted]

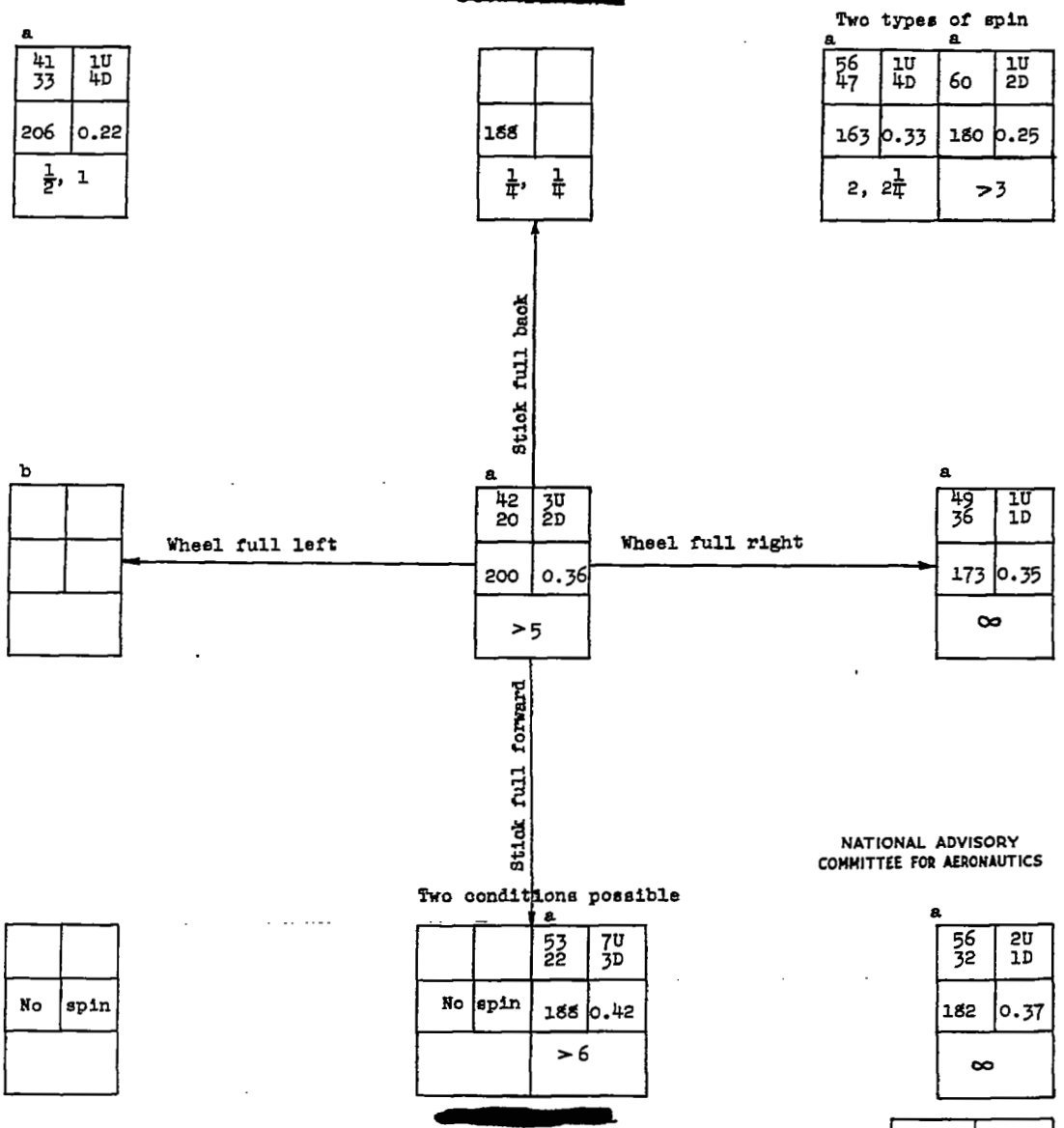


[redacted]

[a]Oscillatory spin; range of values or average value given.
[b]Steep, wandering, and oscillatory spin.

Model values converted to corresponding full-scale values.
U inner wing up
D inner wing down

| | |
|---|---|
| α (deg) | φ (deg) |
| V (fps) | Ω (rps) |
| Turns for recovery | |

CHART 4.- SPIN AND RECOVERY CHARACTERISTICS OF THE $\frac{1}{20}$-SCALE MODEL OF THE NORTHROP N-9M AIRPLANE WITH MASS DISTRIBUTION ALTERNATELY DECREASED AND INCREASED ALONG THE LONGITUDINAL AXIS

[Loading as indicated; recovery attempted by rapid full reversal of the rudder controls (recovery attempted from, and steady-spin data presented for, rudder-full-with spins); right erect spins]

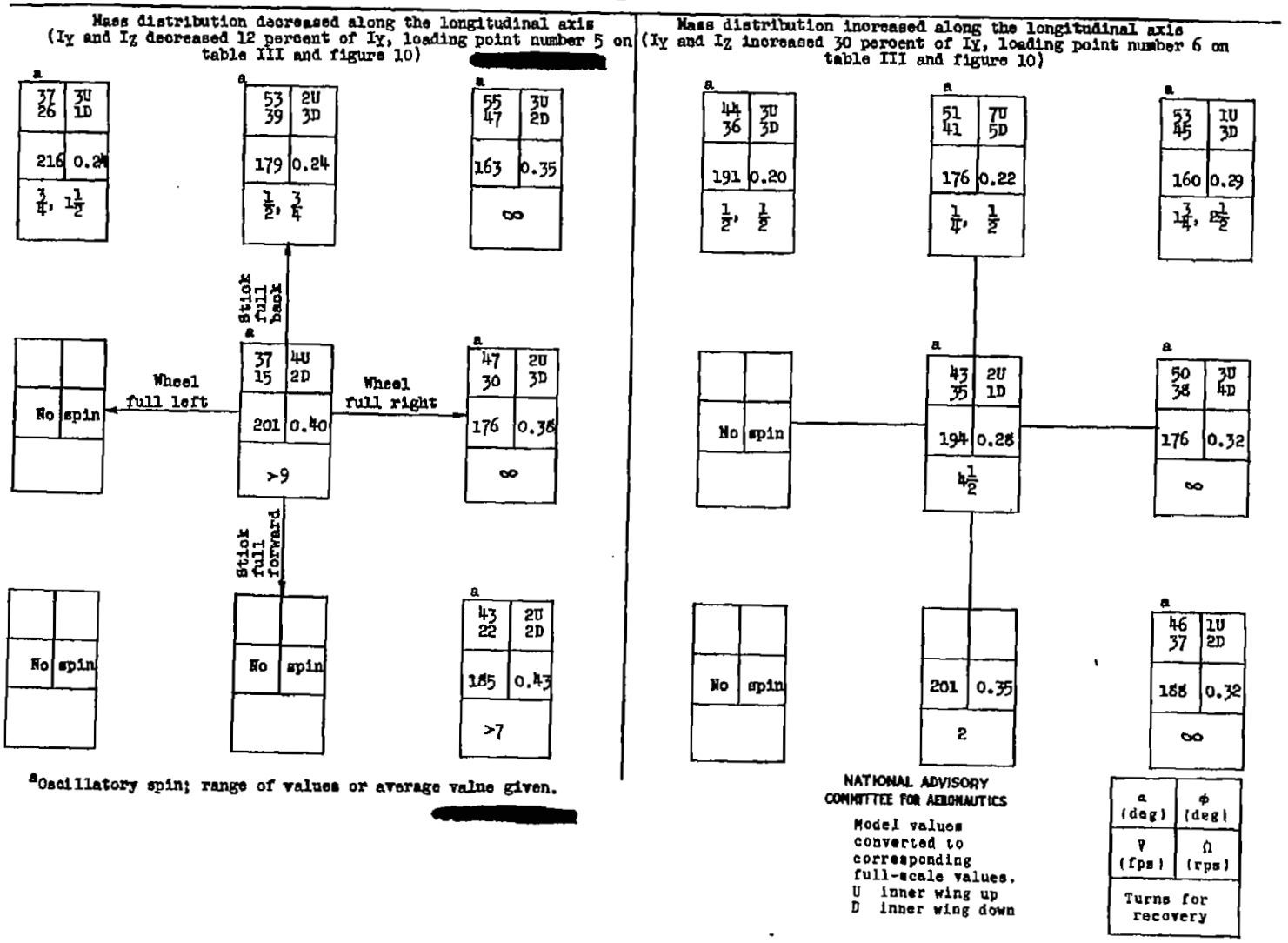


[redacted]

[redacted]

[a]Oscillatory spin; range of values or average value given.

NATIONAL ADVISORY COMMITTEE FOR AERONAUTICS

Model values converted to corresponding full-scale values.
U inner wing up
D inner wing down

CHART 5.- SPIN AND RECOVERY CHARACTERISTICS OF THE $\frac{1}{20}$-SCALE MODEL OF THE NORTHROP N-9M AIRPLANE WITH THE CENTER OF GRAVITY 5 PERCENT OF THE MEAN AERODYNAMIC CHORD FORWARD OF NORMAL

[Loading point number 7 on table III and figure 10; recovery attempted by rapid full reversal of the rudder controls (recovery attempted from, and steady-spin data presented for, rudder-full-with spins); right erect spin]

[redacted]

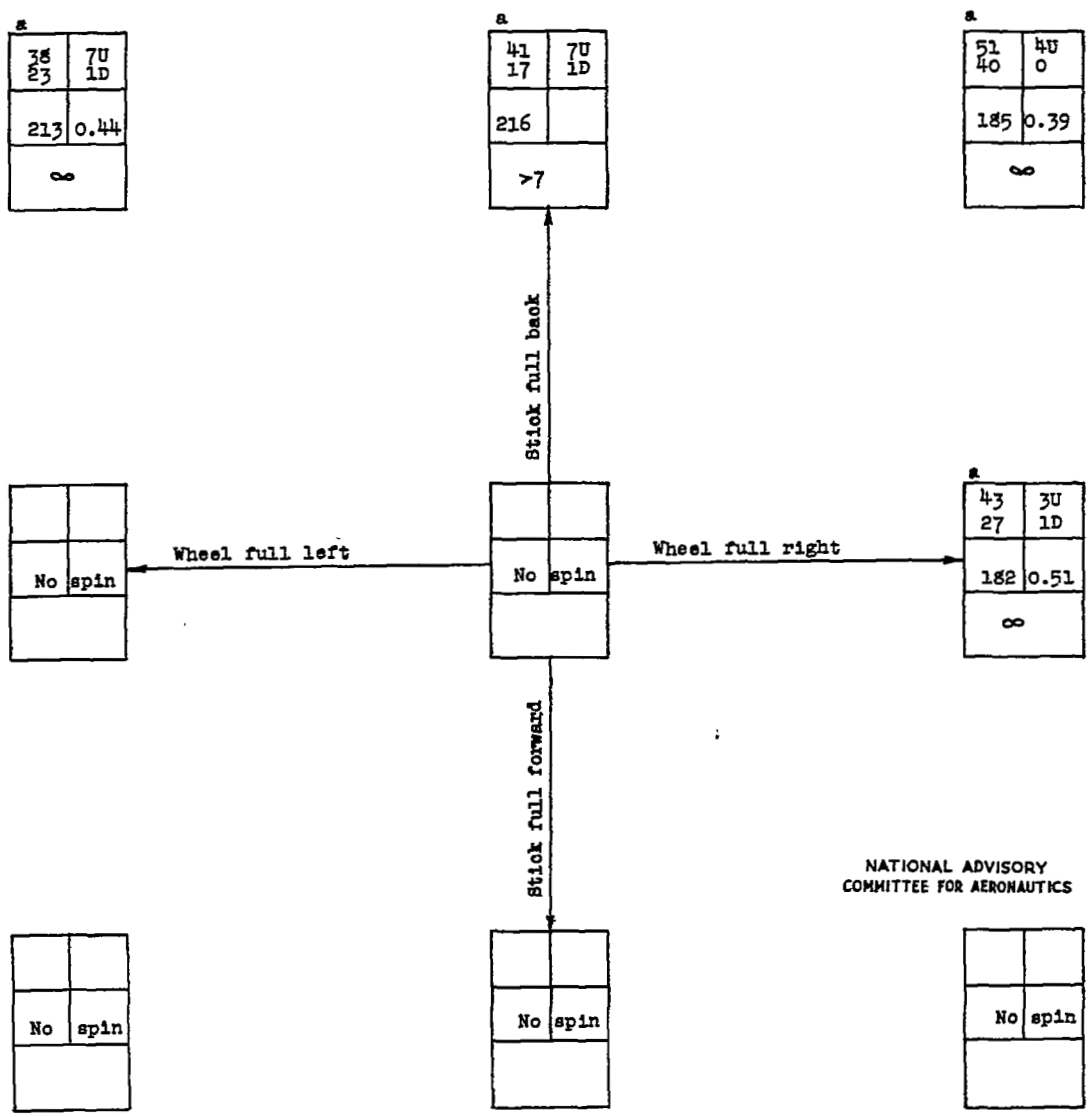


NATIONAL ADVISORY COMMITTEE FOR AERONAUTICS

[redacted]

[a]Oscillatory spin; range of values or average value given.

Model values converted to corresponding full-scale values.
U inner wing up
D inner wing down

| | |
|---|---|
| α (deg) | φ (deg) |
| V (fps) | Ω (rps) |
| Turns for recovery | |

CHART 6.- SPIN AND RECOVERY CHARACTERISTICS OF THE $\frac{1}{20}$-SCALE MODEL OF THE NORTHROP N-9M AIRPLANE WITH THE CENTER OF GRAVITY REARWARD OF NORMAL [redacted]

[Center-of-gravity location as indicated; recovery attempted by rapid full reversal of the rudder controls (recovery attempted from, and steady-spin data presented for, rudder-full-with spins); right erect spins]

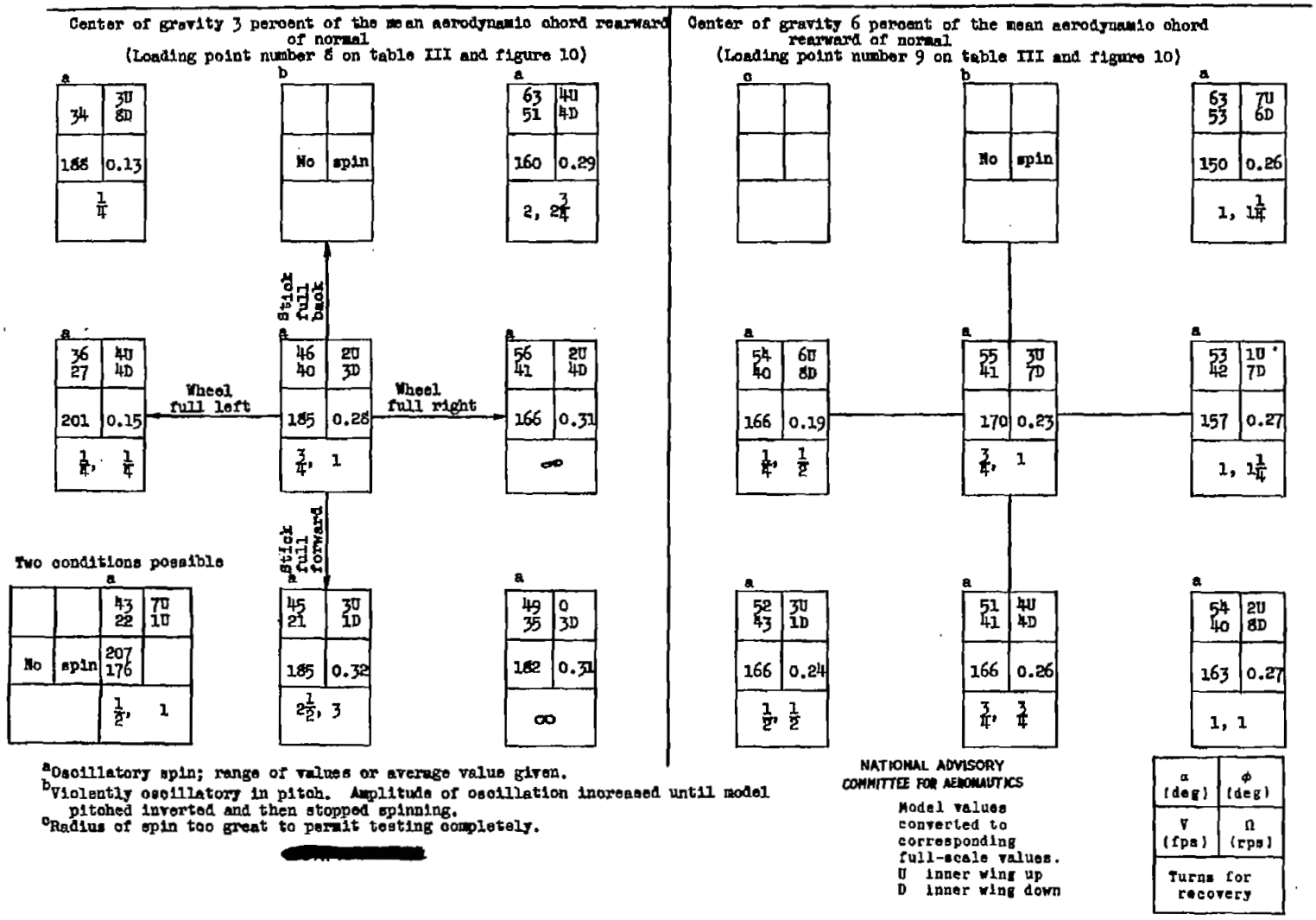


[a]Oscillatory spin; range of values or average value given.
[b]Violently oscillatory in pitch. Amplitude of oscillation increased until model pitched inverted and then stopped spinning.
[c]Radius of spin too great to permit testing completely.

[redacted]

NATIONAL ADVISORY COMMITTEE FOR AERONAUTICS

Model values converted to corresponding full-scale values.
U inner wing up
D inner wing down

CHART 7.- SPIN AND RECOVERY CHARACTERISTICS OF THE $\frac{1}{20}$-SCALE MODEL OF THE NORTHROP N-9M AIRPLANE IN FLIGHT TEST CONDITION NUMBER 3

[Loading point number 3 on table III and figure 10; recovery attempted by rapid full reversal of the rudder controls (recovery attempted from, and steady-spin data presented for, rudder-full-with spins); right erect spins]

[redacted]

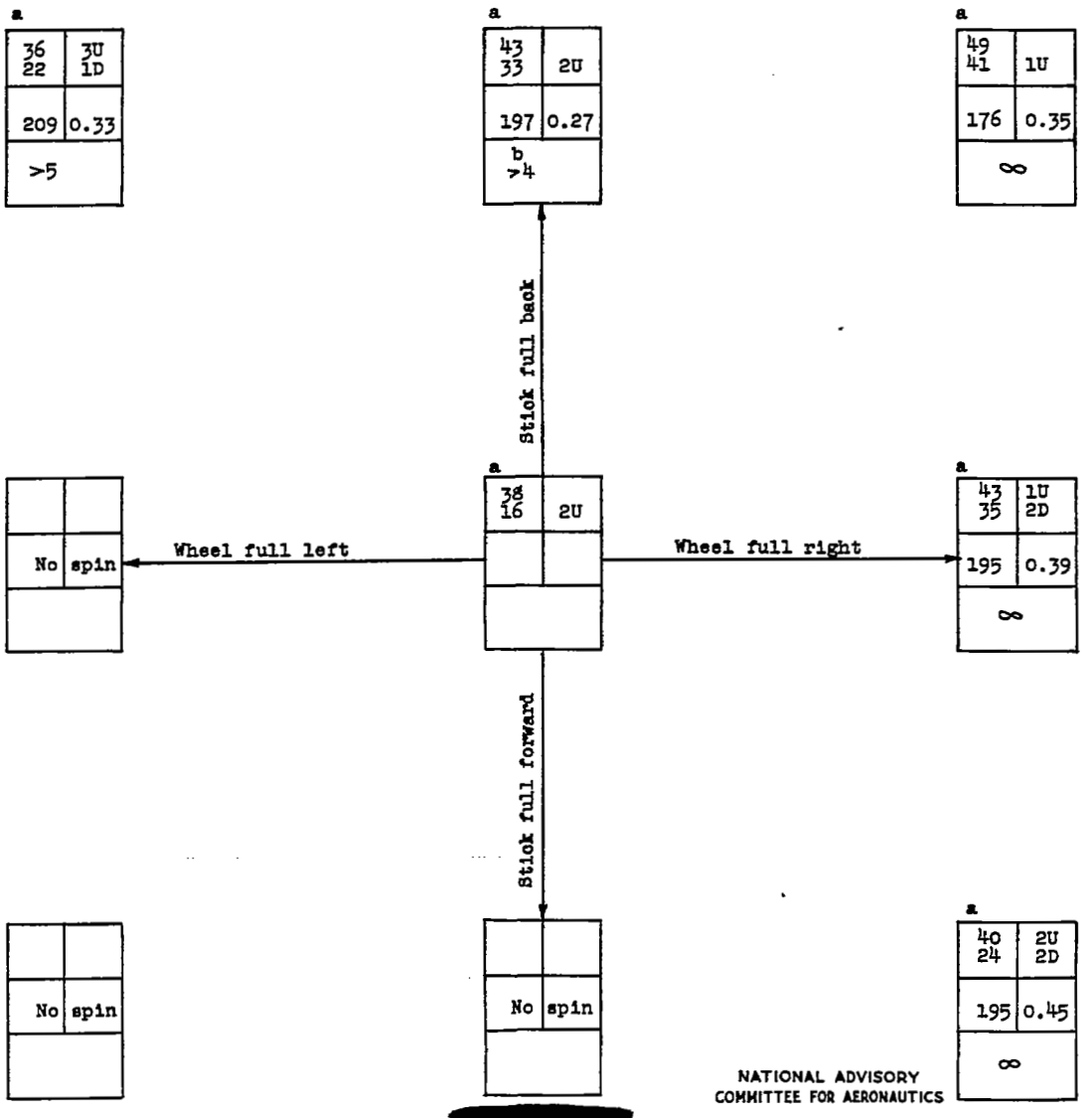


[redacted]

NATIONAL ADVISORY COMMITTEE FOR AERONAUTICS

[a]Oscillatory spin; range of values or average value given.
[b]Visual estimate.

Model values converted to corresponding full-scale values.
U inner wing up
D inner wing down

| | |
|---|---|
| α (deg) | φ (deg) |
| V (fps) | Ω (rps) |
| Turns for recovery | |

CHART 8.- INVERTED SPIN AND RECOVERY CHARACTERISTICS OF THE $\frac{1}{20}$-SCALE MODEL OF THE NORTHROP N-9M AIRPLANE IN FLIGHT TEST CONDITION NUMBER 1

[Loading point number 1 on table III and figure 10; recovery attempted by rapid full reversal of the rudder controls (right pedal forward during steady spin, left pedal forward for recovery); model turning to pilot's right]

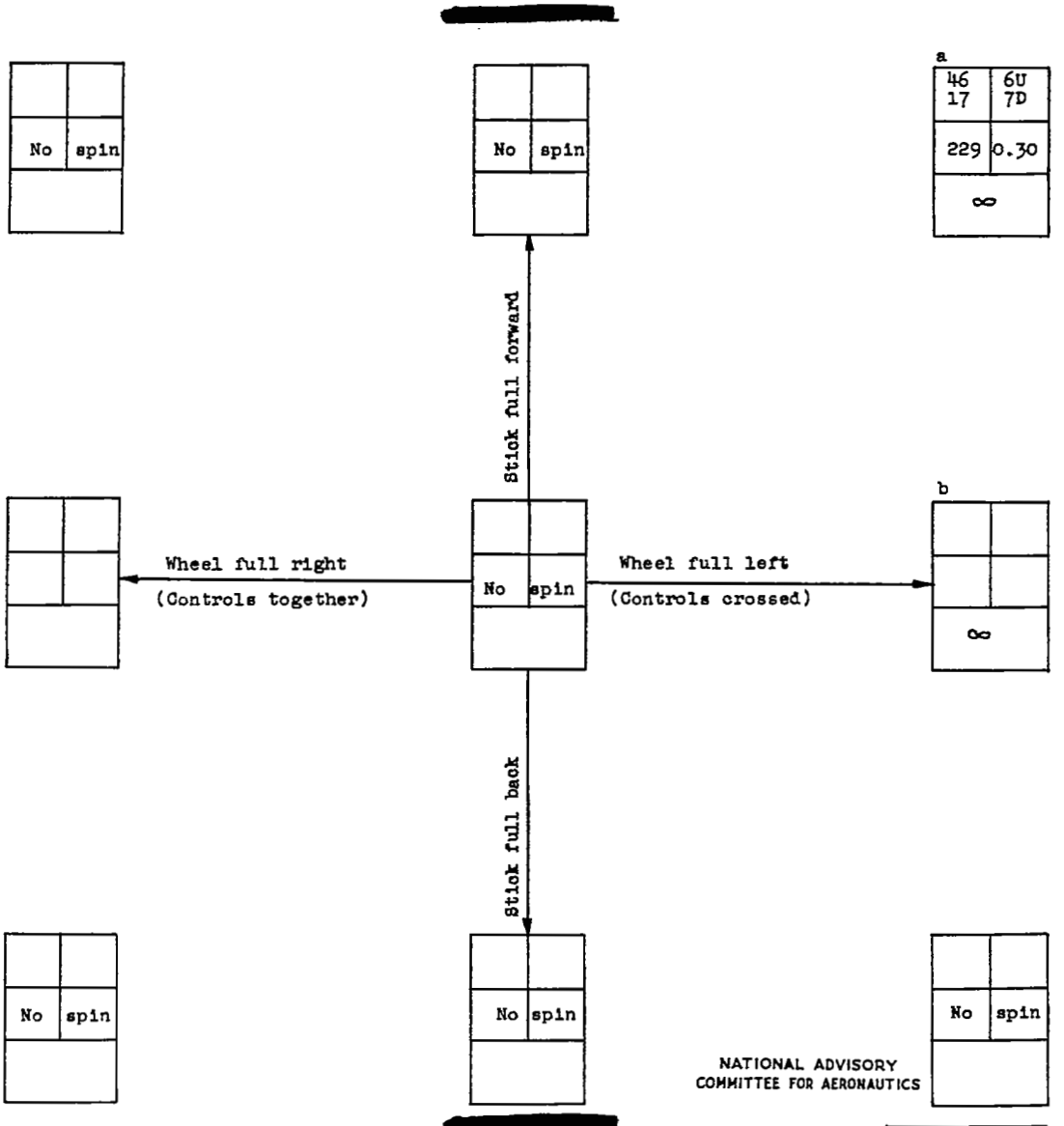


[a]Oscillatory spin; range of values or average value given.
[b]Wandering and oscillatory spin.

Model values converted to corresponding full-scale values.
U inner wing up
D inner wing down

| | |
|---|---|
| α (deg) | φ (deg) |
| V (fps) | Ω (rps) |
| Turns for recovery | |

CHART 9.- SPIN AND RECOVERY CHARACTERISTICS OF THE $\frac{1}{20}$-SCALE MODEL OF THE NORTHROP N-9M AIRPLANE WITH LANDING FLAPS DEFLECTED AND LANDING GEAR EXTENDED

[Flight test condition number 1 (loading point number 1 on table III and figure 10); landing flaps 50° down; landing gear extended; pitch flap deflections as indicated; recovery attempted by rapid full reversal of the rudder controls (recovery attempted from, and steady-spin data presented for, rudder-full-with spins); right erect spins]

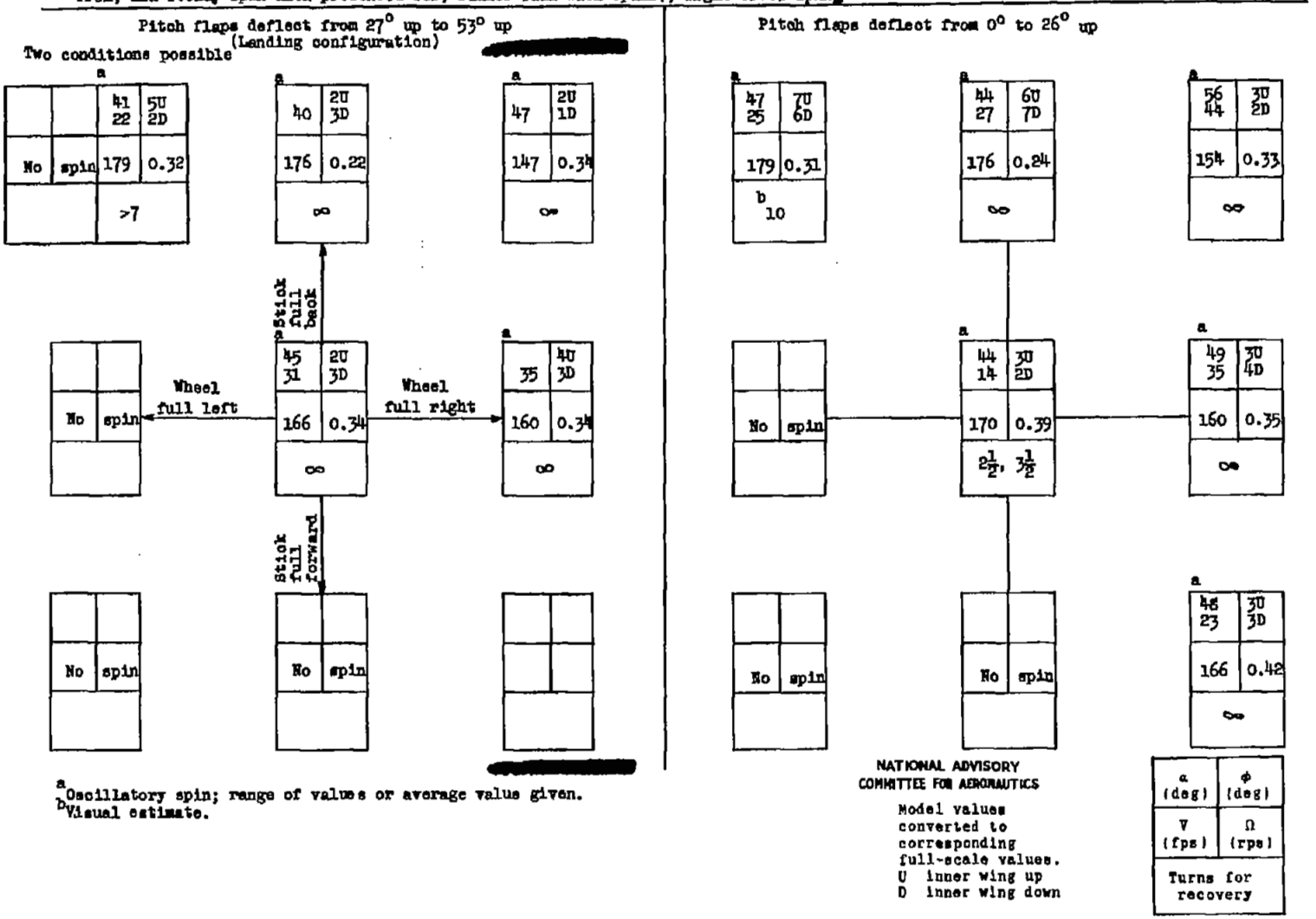


[a]Oscillatory spin; range of values or average value given.
[b]Visual estimate.

NATIONAL ADVISORY COMMITTEE FOR AERONAUTICS

Model values converted to corresponding full-scale values.
U inner wing up
D inner wing down

CHART 10.- SPIN AND RECOVERY CHARACTERISTICS OF THE $\frac{1}{20}$-SCALE MODEL OF THE NORTHROP N-9M AIRPLANE SIMULATING THE CONFIGURATION IN WHICH THE AIRPLANE IS BELIEVED TO HAVE BEEN AT THE TIME OF THE CRASH

[Flight test condition number 1 (loading point number 1 on table III and figure 10); landing flaps 25° down; landing gear retracted; pitch flaps deflect from 0° to 26° up; recovery attempted by rapid full reversal of the rudder controls (recovery attempted from, and steady-spin data presented for, rudder-full-with spins); right erect spins]

[redacted]

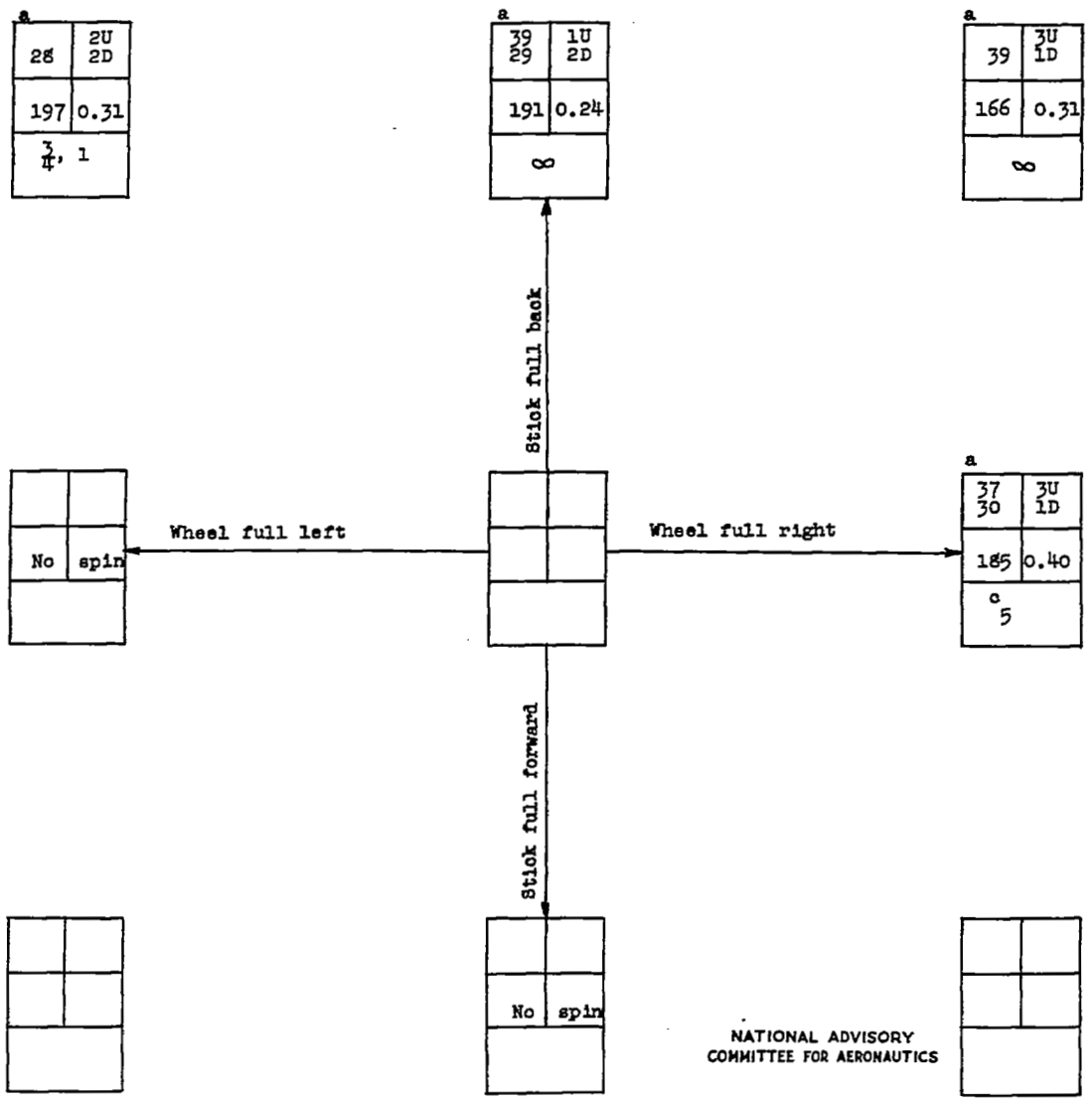


[a]Oscillatory spin; range of values or average value given.
[b]Spin is oscillatory in pitch.
[c]Visual estimate.

[redacted]

Model values converted to corresponding full-scale values.
U inner wing up
D inner wing down

| | |
|---|---|
| $\alpha$ (deg) | $\phi$ (deg) |
| V (fps) | $\Omega$ (rps) |
| Turns for recovery | |

CHART 11.- SPIN AND RECOVERY CHARACTERISTICS OF THE $\frac{1}{30}$-SCALE MODEL OF THE NORTHROP N-9M AIRPLANE WITH EQUIVALENT PROPELLER FIN AREA INSTALLED

[Flight test condition number 1 (loading point number 1 on table III and figure 10); recovery attempted by rapid full reversal of the rudder controls (recovery attempted from, and steady-spin data presented for, rudder-full-with spins); right erect spins]

[redacted]

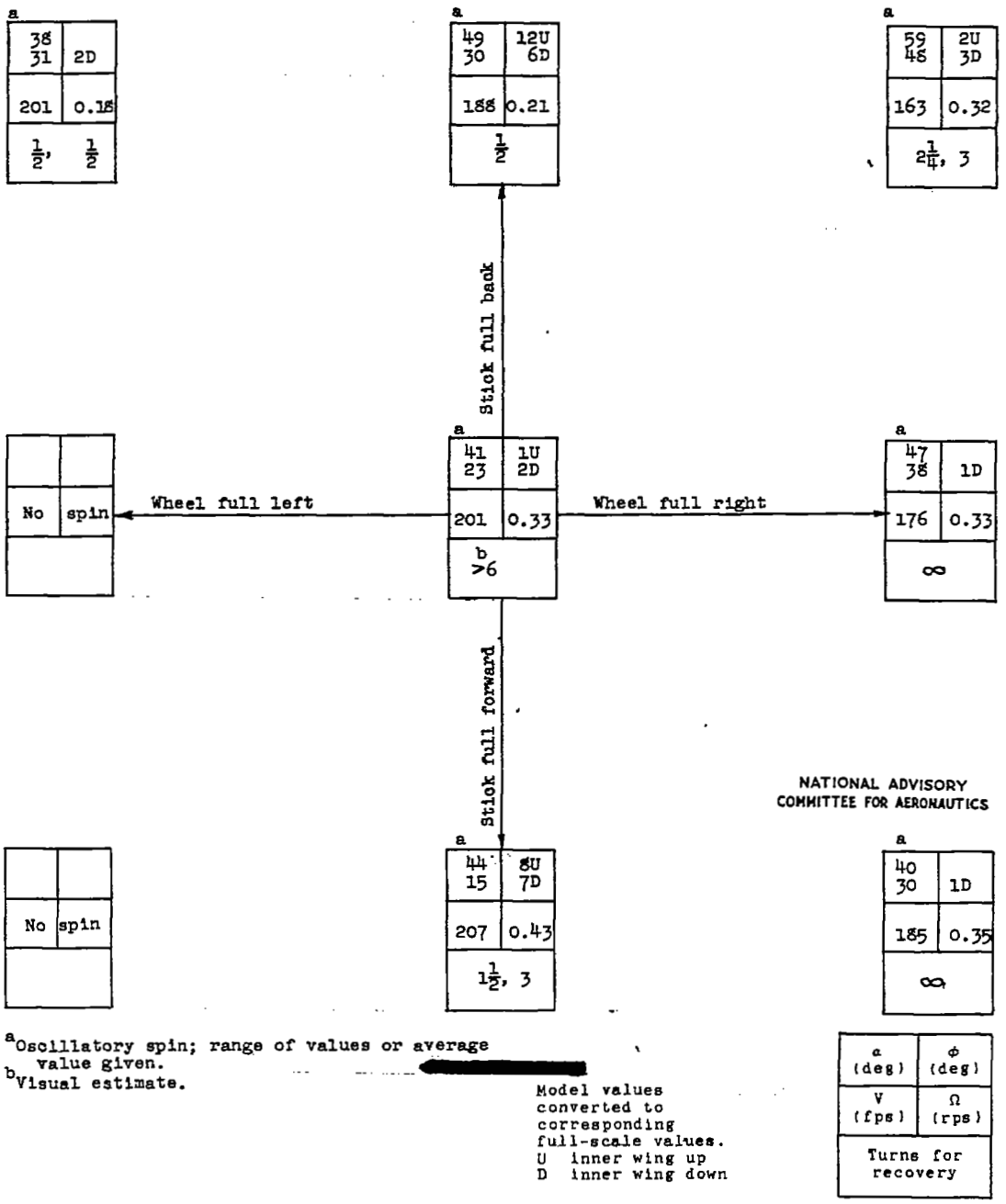


NATIONAL ADVISORY COMMITTEE FOR AERONAUTICS

[a]Oscillatory spin; range of values or average value given.
[b]Visual estimate.

[redacted]

Model values converted to corresponding full-scale values.
U inner wing up
D inner wing down

| | |
|---|---|
| α (deg) | φ (deg) |
| V (fps) | Ω (rps) |
| Turns for recovery | |

CHART 12.- SPIN AND RECOVERY CHARACTERISTICS OF THE $\frac{1}{20}$-SCALE MODEL OF THE NORTHROP N-9M AIRPLANE WITH SLATS INSTALLED

[Flight test condition number 1 (loading point number 1 on table III and figure 10); slat installation as indicated; recovery attempted by rapid full reversal of the rudder controls (recovery attempted from, and steady-spin data presented for, rudder-full-with spins); right erect spins]

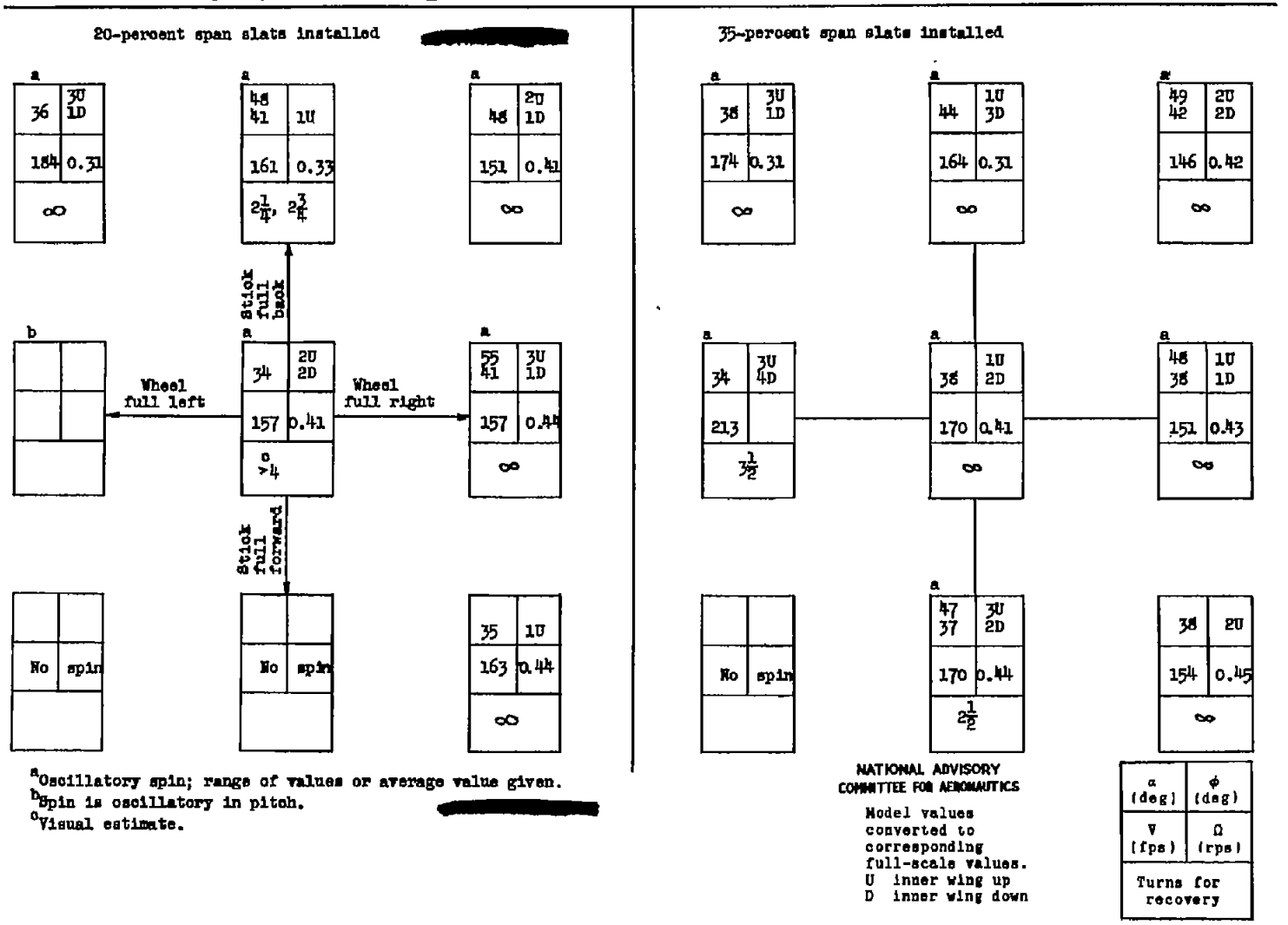


[a]Oscillatory spin; range of values or average value given.
[b]Spin is oscillatory in pitch.
[c]Visual estimate.

[redacted]

NATIONAL ADVISORY COMMITTEE FOR AERONAUTICS

Model values converted to corresponding full-scale values.
U inner wing up
D inner wing down

CHART 13.- SPIN AND RECOVERY CHARACTERISTICS OF THE $\frac{1}{20}$-SCALE MODEL OF THE RTHROp N-9M AIRPLANE WITH HORIZONTAL AREA INSTALLED

[Flight test condition number 1 (loading point number 1 on table III and figure 10); recovery attempted by rapid full reversal of the rudder controls (recovery attempted from, and steady-spin data presented for, rudder-full-with spins); right erect spins]

[redacted]

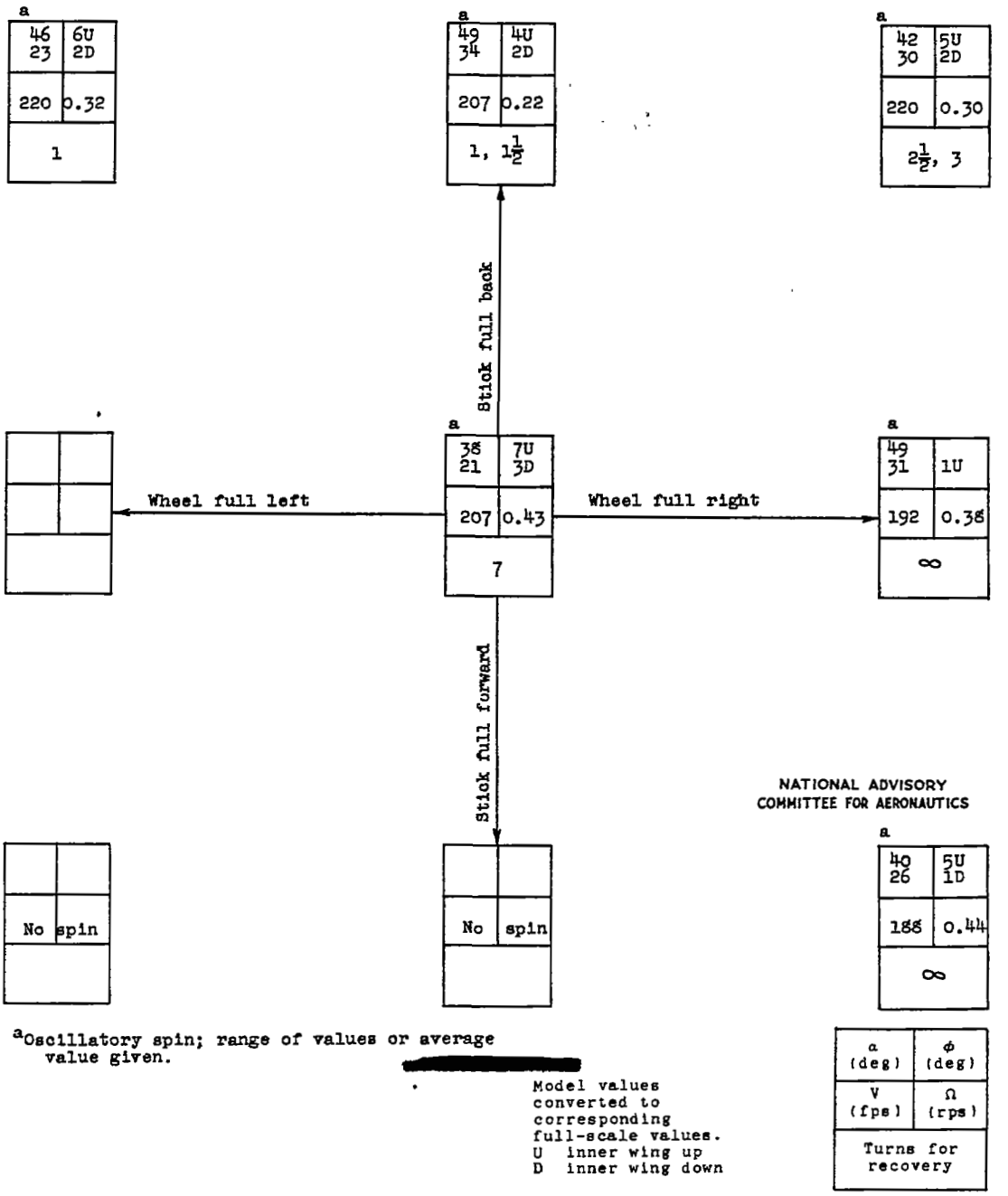


NATIONAL ADVISORY COMMITTEE FOR AERONAUTICS

[a]Oscillatory spin; range of values or average value given.

[redacted]

Model values converted to corresponding full-scale values.
U inner wing up
D inner wing down

| | |
|---|---|
| α (deg) | φ (deg) |
| V (fps) | Ω (rps) |
| Turns for recovery | |

CHART 14.- SPIN AND RECOVERY CHARACTERISTICS OF THE $\frac{1}{57.33}$-SCALE MODEL OF THE NORTHROP XB-35 AIRPLANE IN THE NORMAL LOADING CONDITION

[Landing flaps neutral; landing gear retracted; slots closed; pitch flaps neutral; rudder position as indicated; recovery attempted by rapid full reversal of the rudder controls to against the spin except as indicated (recovery attempted from, and steady-spin data presented for, spins with initial rudder controls setting indicated); right erect spins]

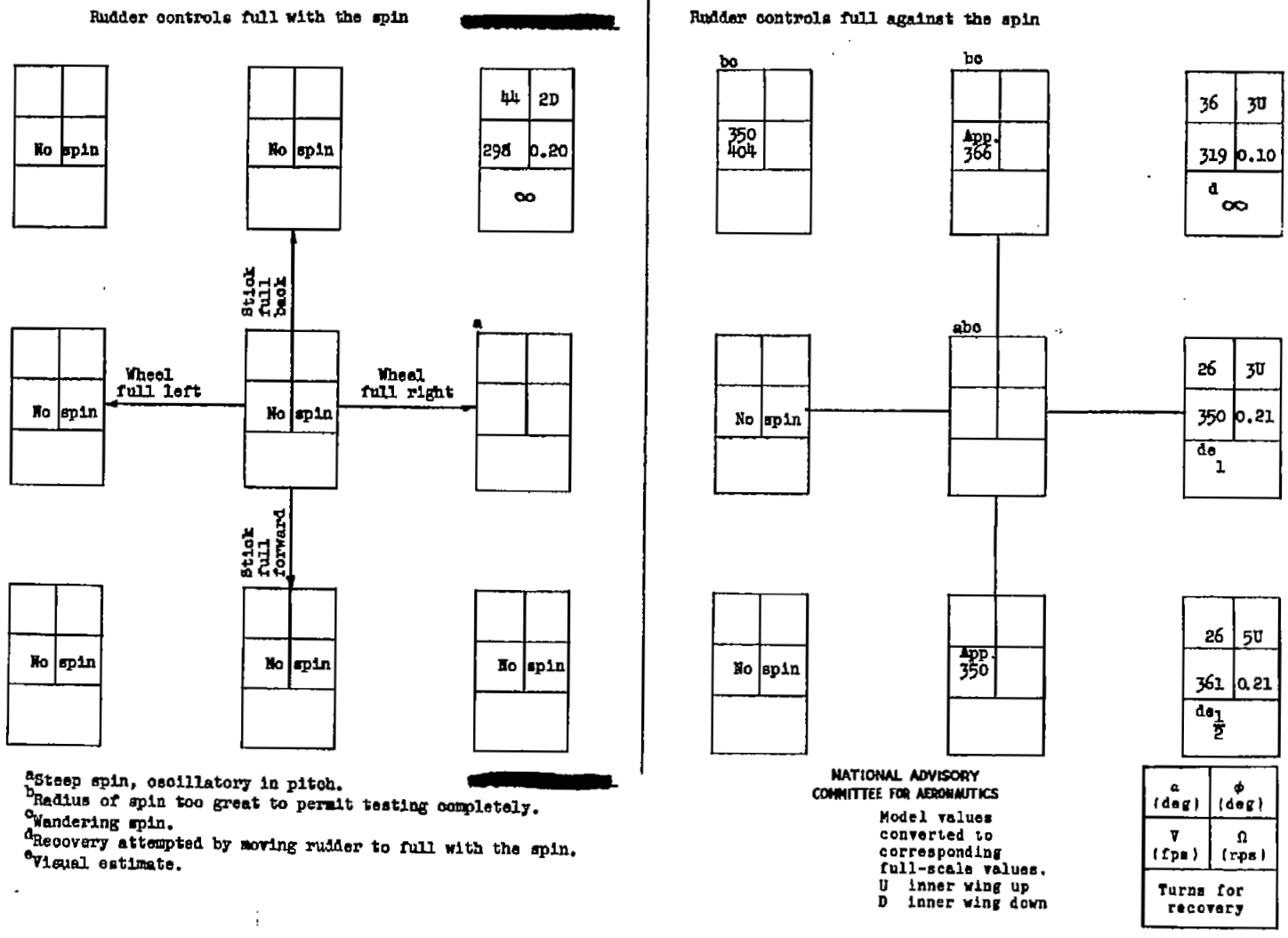


[a]Steep spin, oscillatory in pitch.
[b]Radius of spin too great to permit testing completely.
[c]Wandering spin.
[d]Recovery attempted by moving rudder to full with the spin.
[e]Visual estimate.

[redacted]

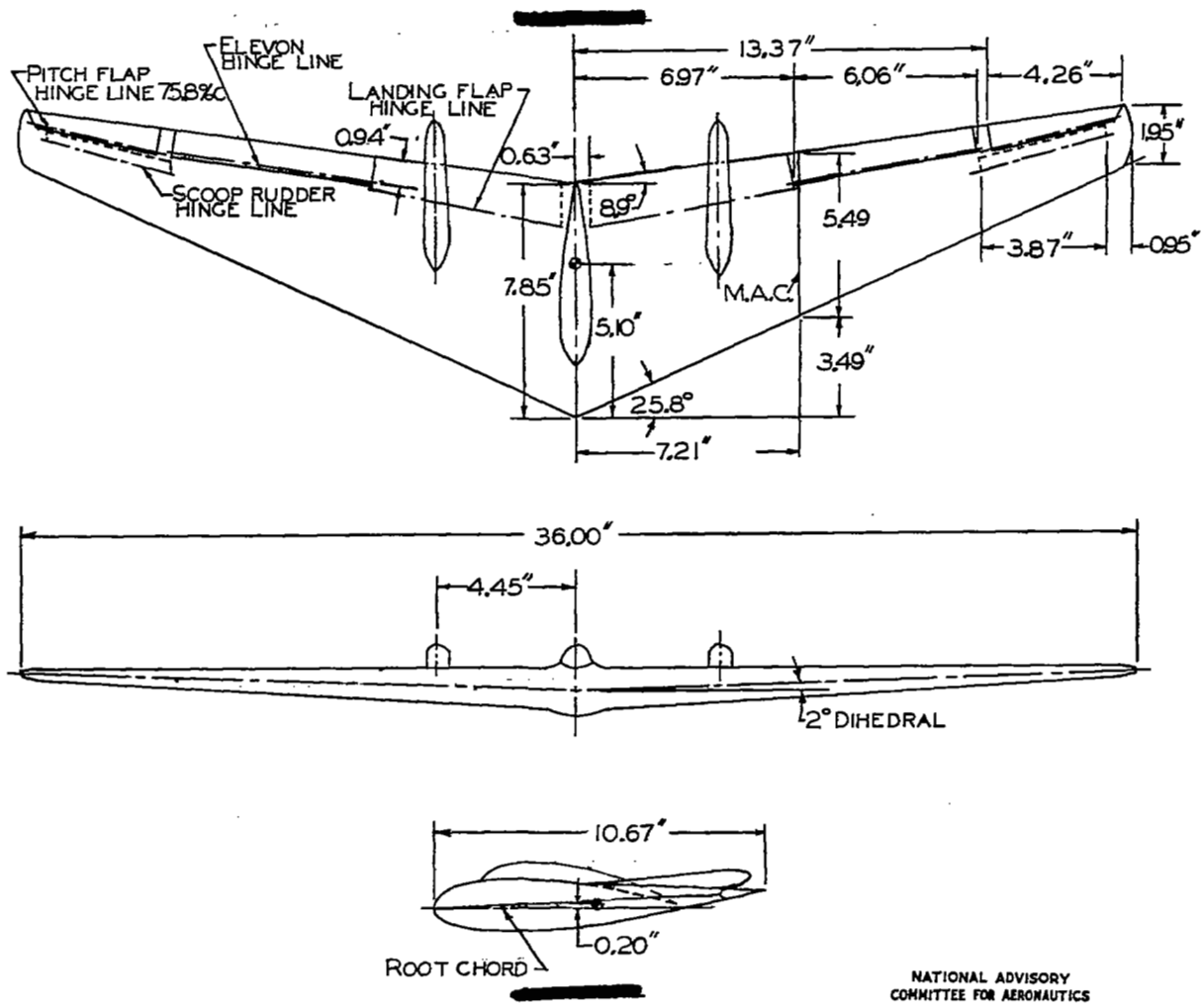


[redacted]

NATIONAL ADVISORY COMMITTEE FOR AERONAUTICS

FIGURE 1.- THREE-VIEW DRAWING OF THE $\frac{1}{20}$-SCALE MODEL OF THE NORTHROP N-9M AIRPLANE AS TESTED IN THE 20-FOOT FREE-SPINNING TUNNEL. CENTER OF GRAVITY SHOWN FOR FLIGHT TEST CONDITION NUMBER 1.

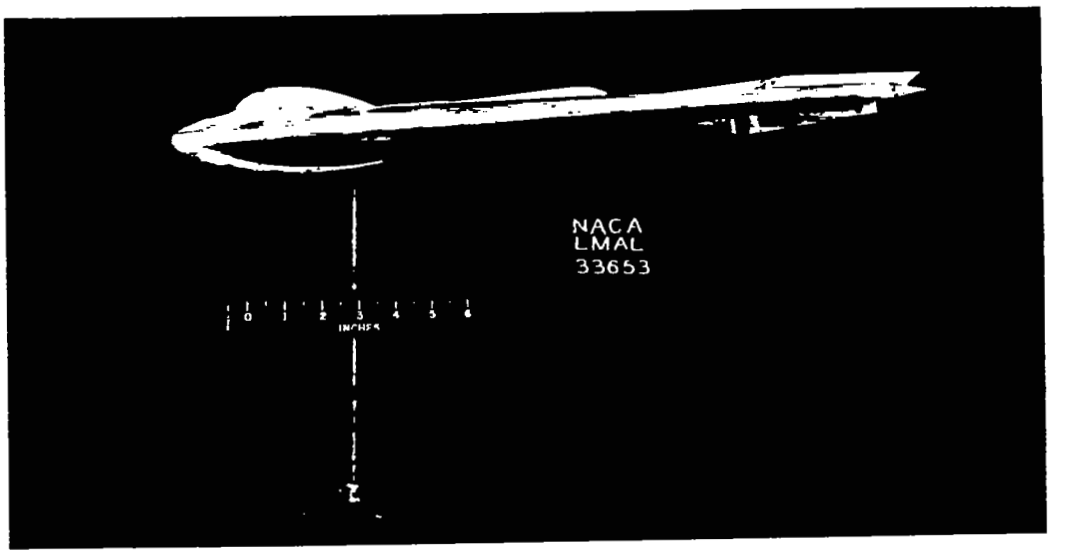


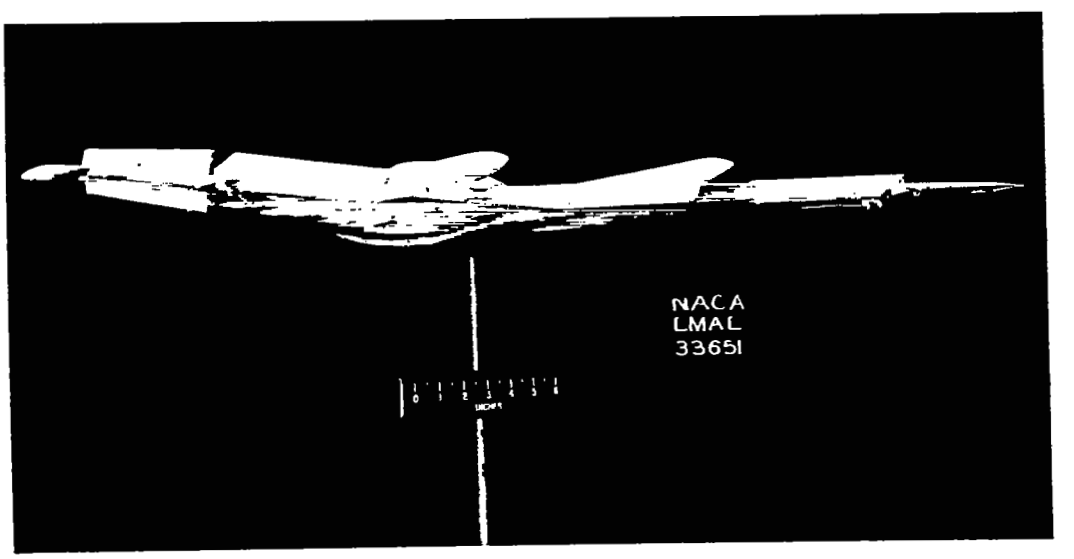


Figure 2.- The $\frac{1}{20}$-scale model of the Northrop N-9M airplane as tested in the 20-foot free-spinning tunnel in the clean condition.

[redacted]

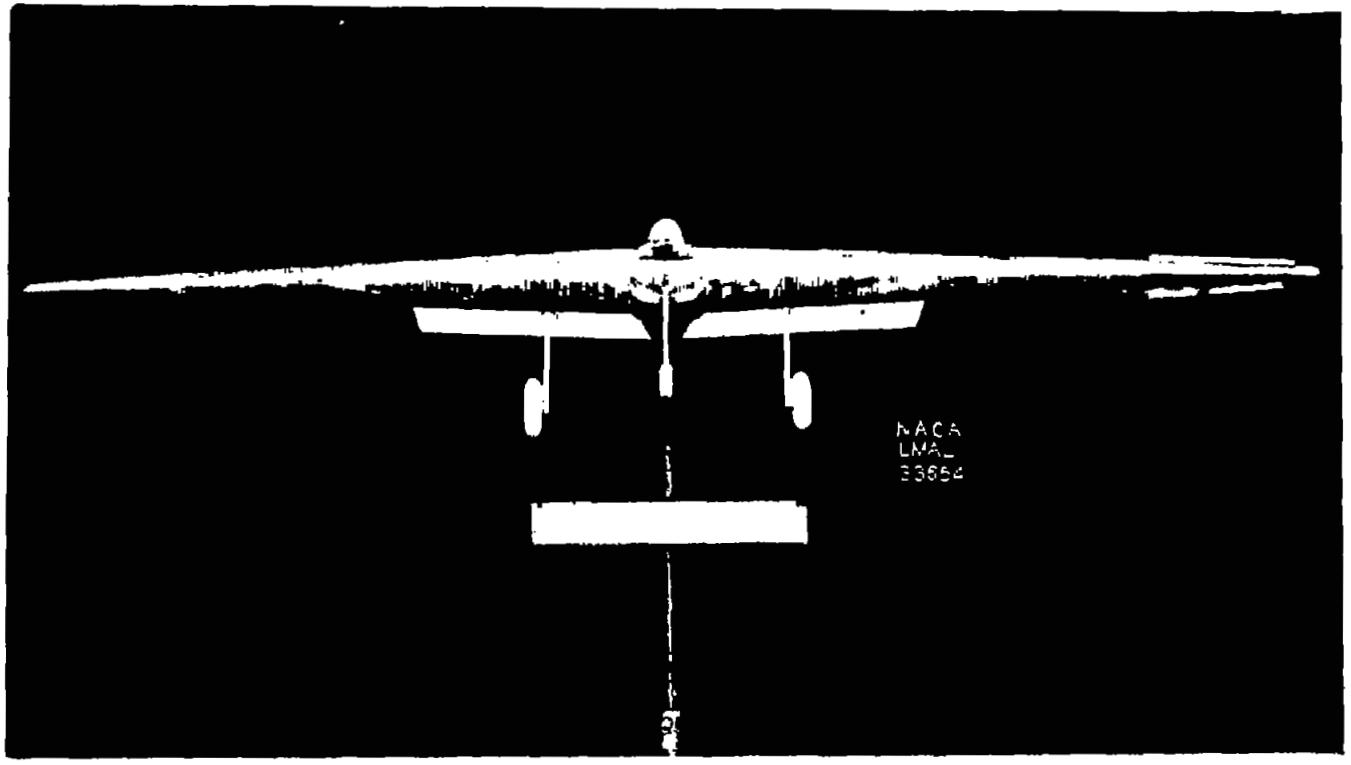


Figure 3.- The $\frac{1}{20}$-scale model of the Northrop N-9M airplane as tested in the 20-foot free-spinning tunnel in the landing condition.

[redacted]

NATIONAL ADVISORY COMMITTEE FOR AERONAUTICS
LANGLEY MEMORIAL AERONAUTICAL LABORATORY - LANGLEY FIELD, VA.

[redacted]

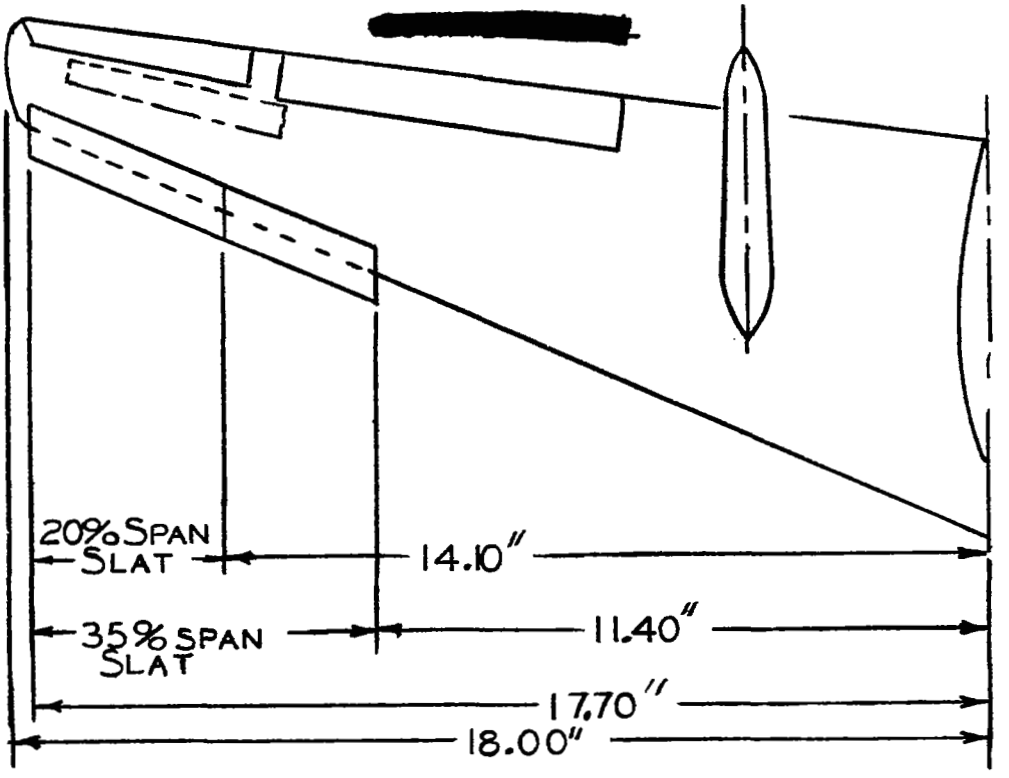


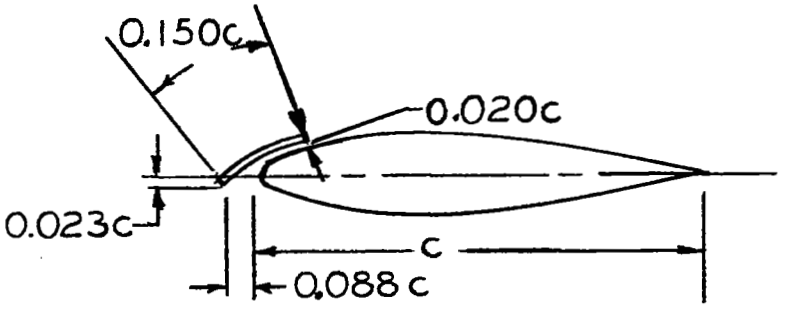


TYPICAL SECTION

NATIONAL ADVISORY COMMITTEE FOR AERONAUTICS

[redacted]

FIGURE 4.-SIMULATED SLATS TESTED ON THE $\frac{1}{20}$-SCALE MODEL OF THE NORTHROP N-9M AIRPLANE.

[redacted]

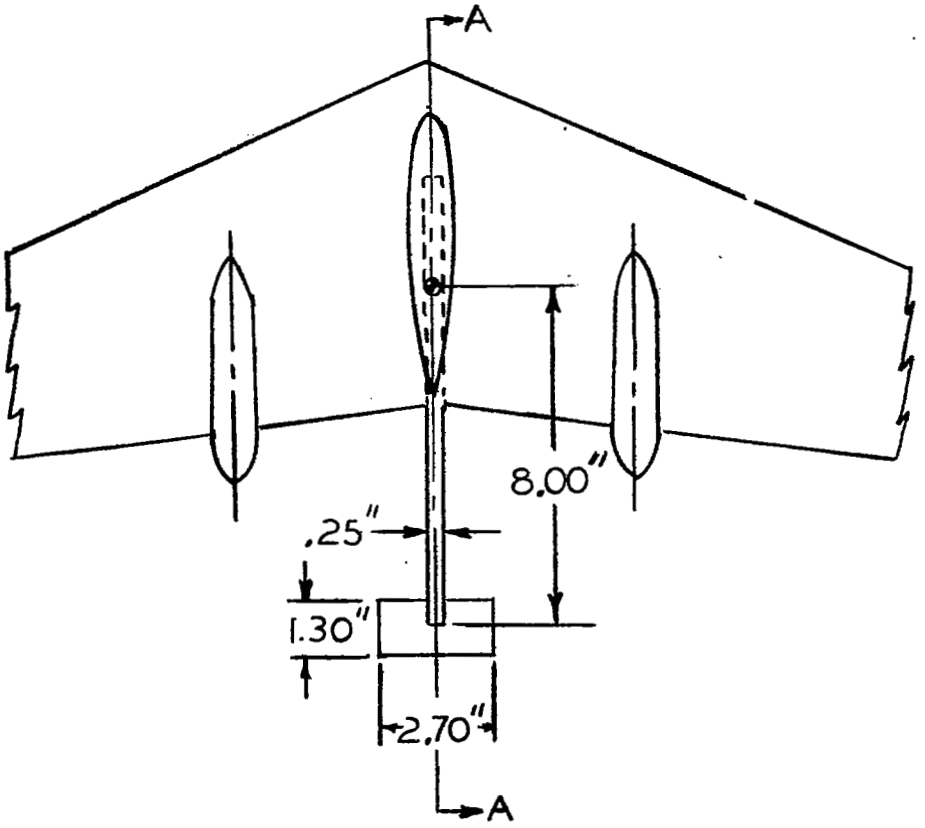


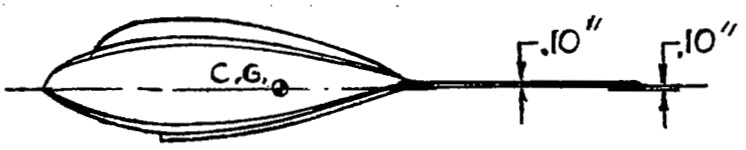


SECTION A-A

NATIONAL ADVISORY
COMMITTEE FOR AERONAUTICS

FIGURE 5.- HORIZONTAL AREA TESTED ON THE $\frac{1}{20}$-SCALE MODEL OF THE NORTHROP N-9M AIRPLANE. [redacted]

CONFIDENTIAL

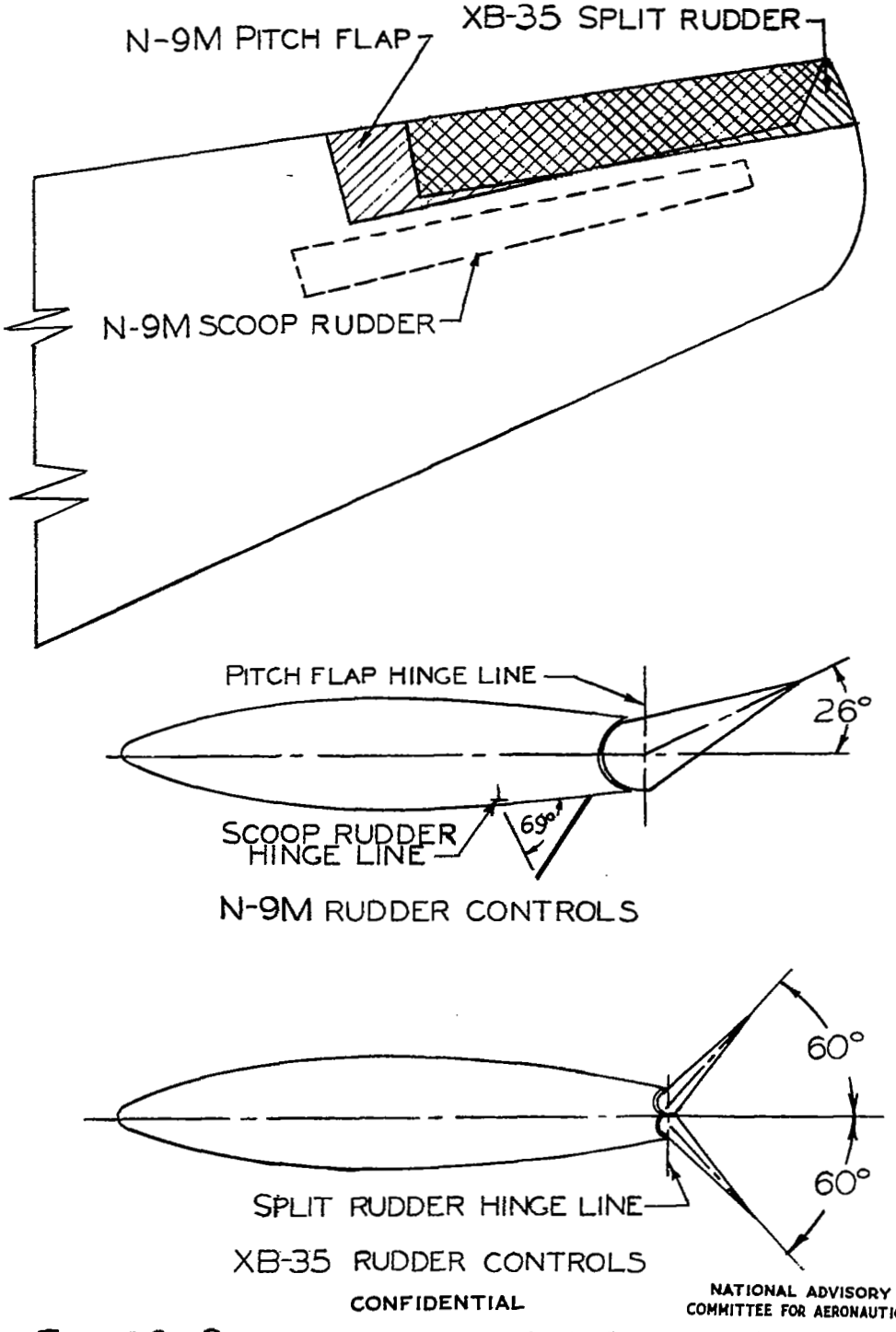


CONFIDENTIAL

NATIONAL ADVISORY COMMITTEE FOR AERONAUTICS

FIGURE 6.-COMPARISON OF THE RUDDER CONTROLS OF THE NORTHROP N-9M AND XB-35 MODELS.

[redacted]

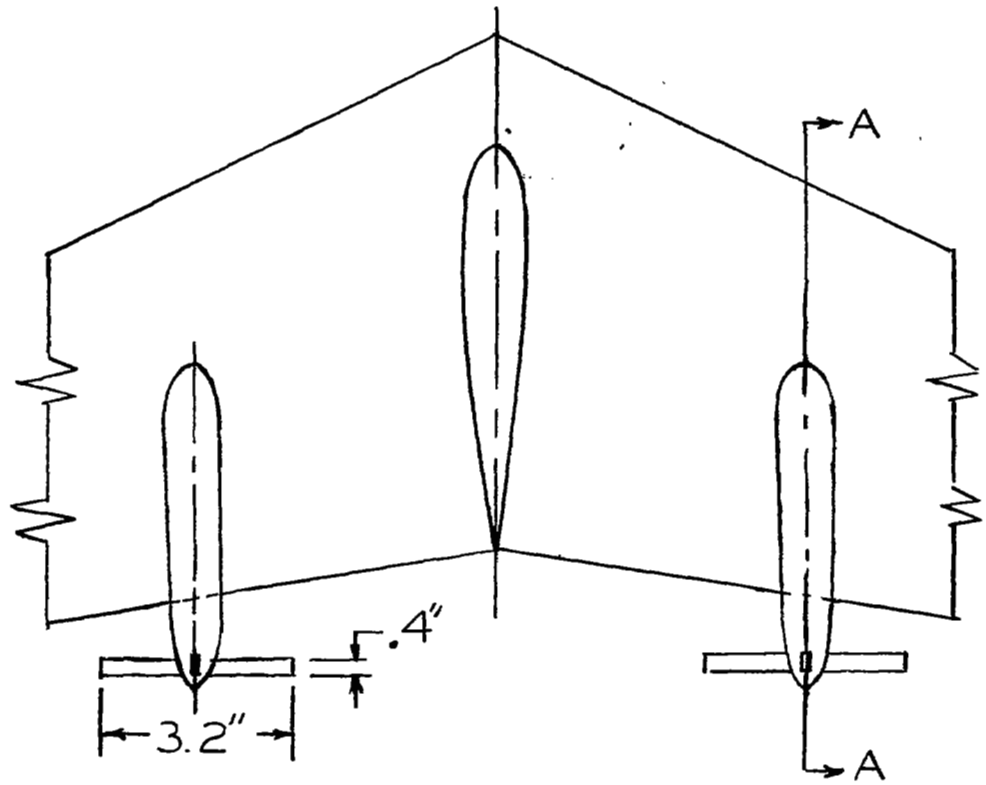


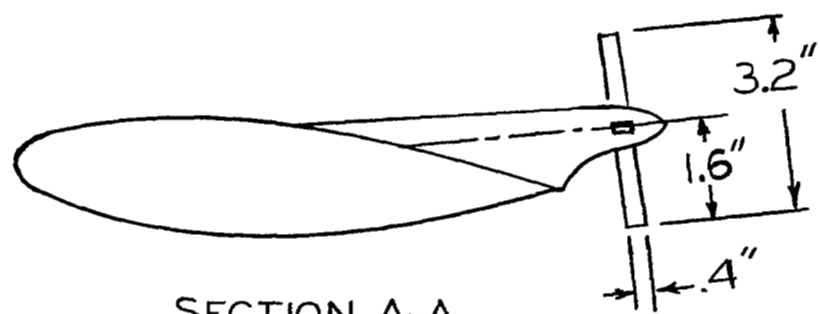


SECTION A-A

[redacted]

FIGURE 7.- EQUIVALENT PROPELLER FIN AREA AS TESTED ON THE $\frac{1}{20}$-SCALE MODEL OF THE NORTHROP N-9M AIRPLANE.

NATIONAL ADVISORY
COMMITTEE FOR AERONAUTICS

[redacted]

Figure 8.- The $\frac{1}{20}$-scale model of the Northrop N-9M airplane spinning in the 20-foot free-spinning tunnel.

[redacted]

NATIONAL ADVISORY COMMITTEE FOR AERONAUTICS
LANGLEY MEMORIAL AERONAUTICAL LABORATORY - LANGLEY FIELD, VA.

[redacted]

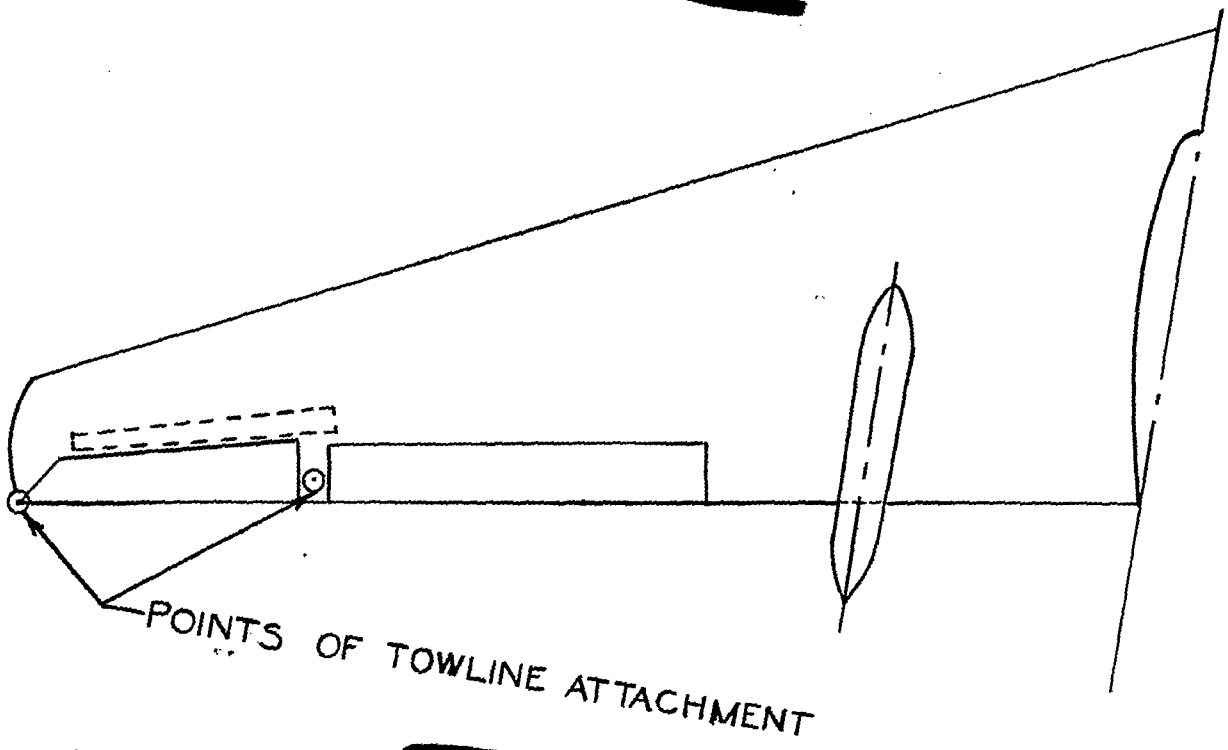


[redacted]

FIGURE 9.- LOCATION OF THE POINTS OF TOWLINE ATTACHMENT FOR THE SPIN-RECOVERY PARACHUTE TESTS ON THE $\frac{1}{20}$ SCALE MODEL OF THE NORTHROP N-9M AIRPLANE.

NATIONAL ADVISORY COMMITTEE FOR AERONAUTICS

185910

[redacted]

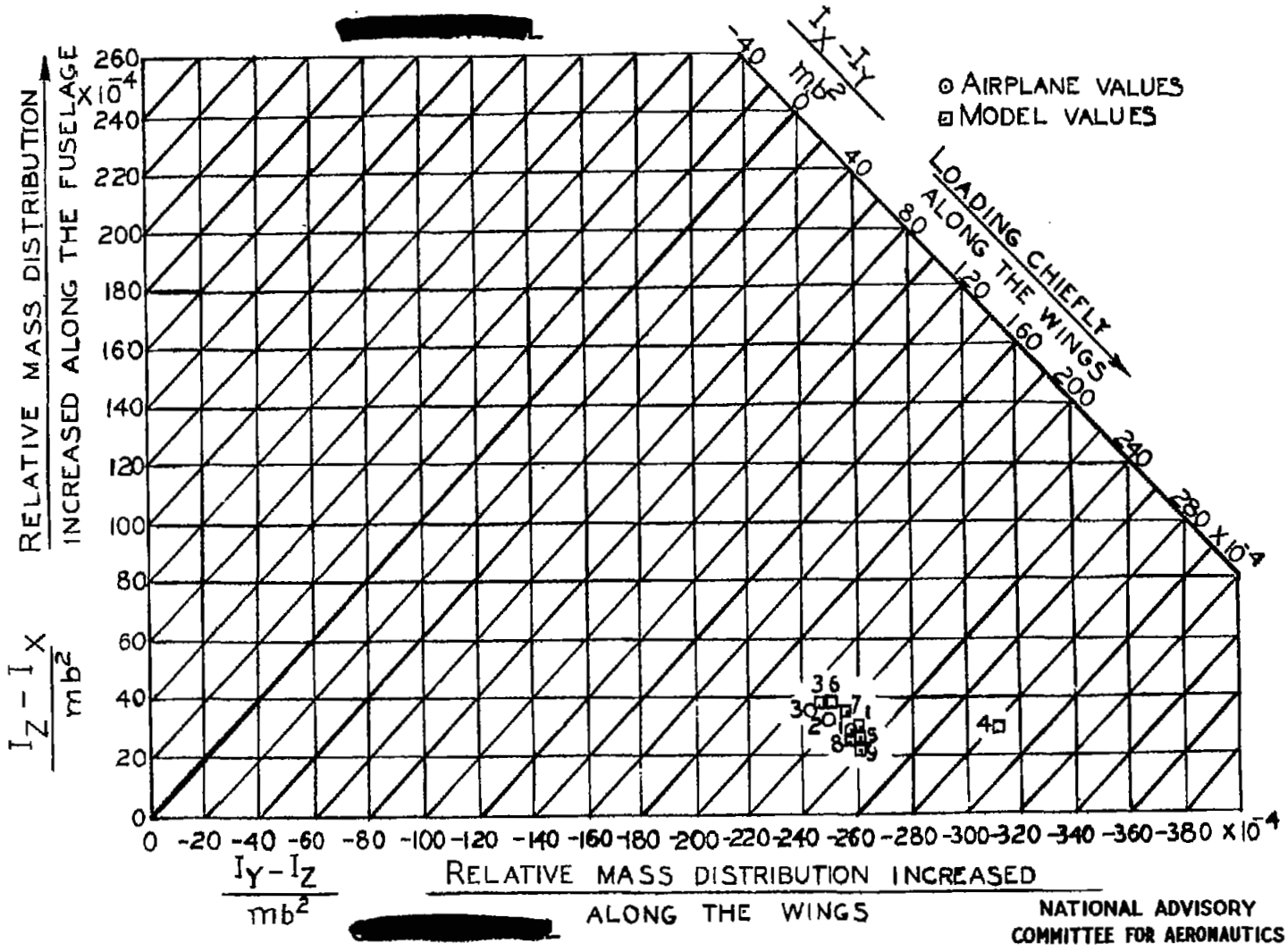


NATIONAL ADVISORY COMMITTEE FOR AERONAUTICS

FIGURE 10.- INERTIA PARAMETERS FOR LOADINGS POSSIBLE ON THE N-9M AIRPLANE AND FOR LOADINGS TESTED ON THE N-9M MODEL (POINTS ARE FOR LOADINGS LISTED ON TABLE III)

[redacted]

[redacted]

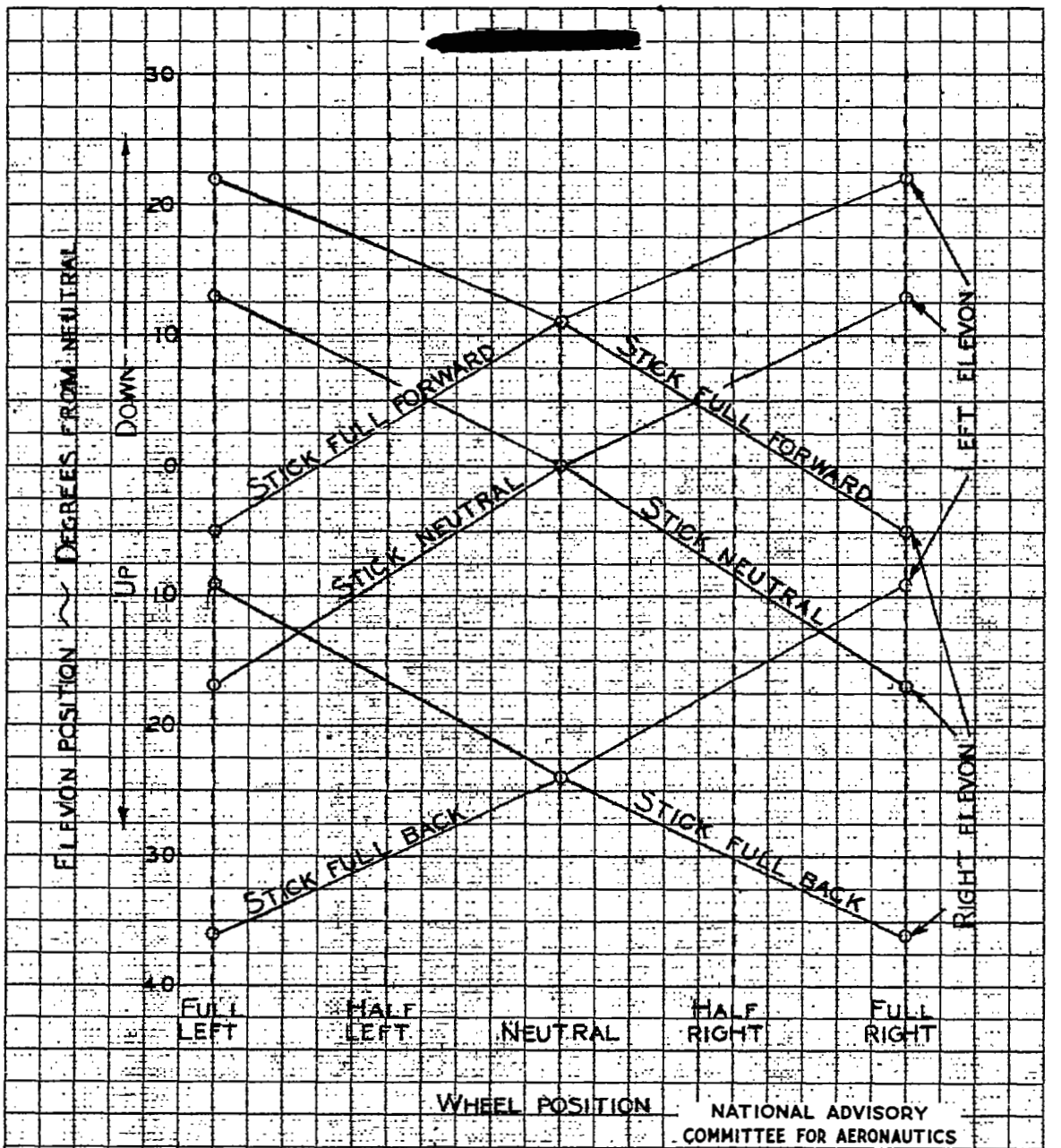


NATIONAL ADVISORY COMMITTEE FOR AERONAUTICS

FIGURE 11.- ELEVON DEFLECTIONS USED ON THE $\frac{1}{20}$-SCALE MODEL OF THE NORTHROP N-9M AIRPLANE FOR VARIOUS COMBINATONS OF STICK AND WHEEL POSITIONS.

[redacted]

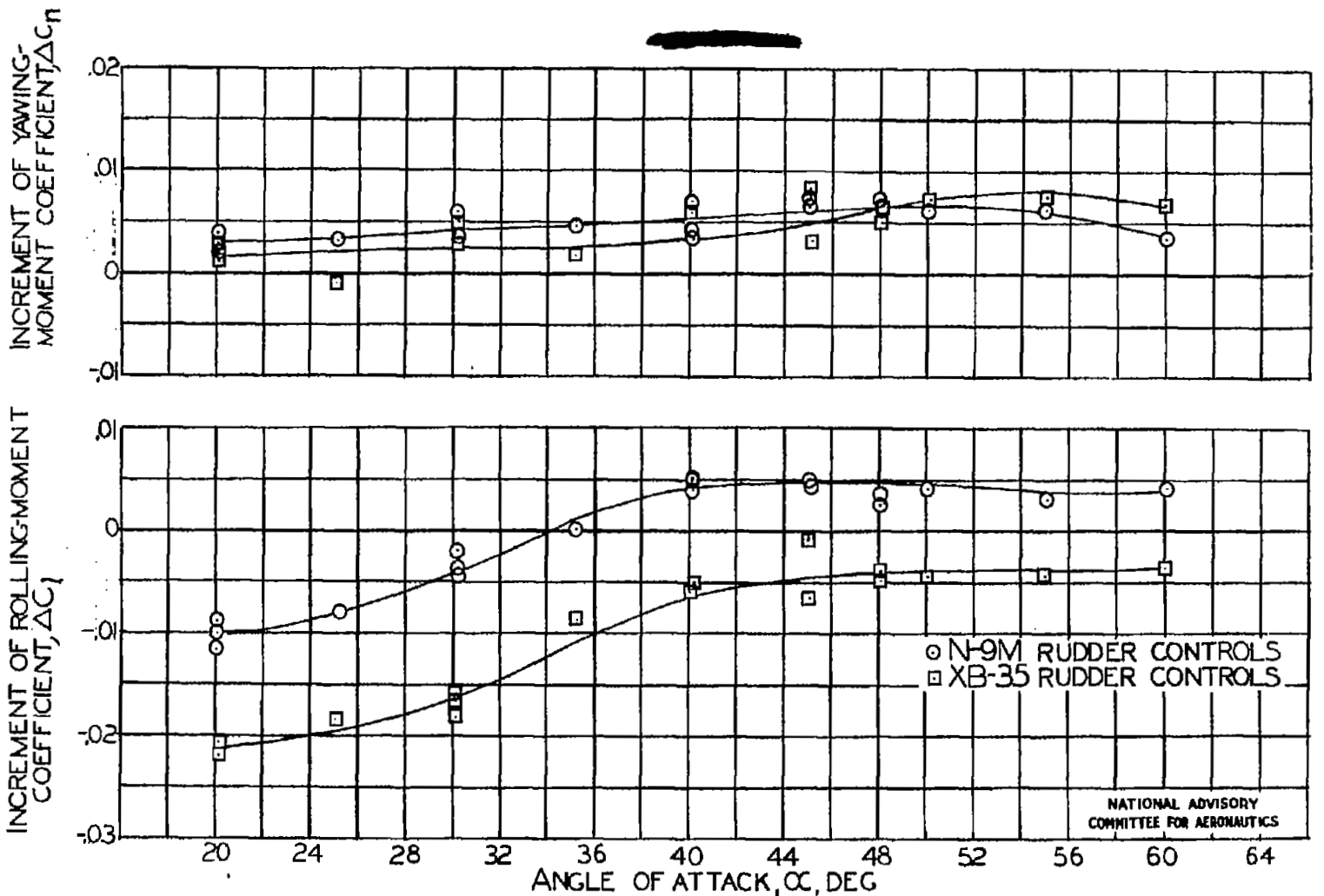


FIGURE 12.- INCREMENTS OF YAWING- AND ROLLING-MOMENT COEFFICIENTS CONTRIBUTED BY THE N-9M AND XB35 RUDDER CONTROLS AS A FUNCTION OF ANGLE OF ATTACK. RUDDER CONTROLS ON RIGHT WINGTIP FULLY DEFLECTED; RUDDER CONTROLS ON LEFT WINGTIP NEUTRAL; Q=4.274.