REPORT No. 11.

(In Seven Parts.)

CARBURETOR DESIGN—A PRELIMINARY STUDY OF THE STATE OF THE ART.

By CHARLES EDWARD LUCKE,
Professor of Mechanical Engineering,

Assisted by FRIEDERICH OTTO WILLHÖFFT,
Assistant Professor of Mechanical Engineering.

COLUMBIA UNIVERSITY, NEW YORK CITY.

CONTENTS OF REPORT No. 11.

PART I.

Page.

Introduction.—Nature of the problem and scope of the present contribution.—The carburetor as a mixture maker.—General review of carburetion.—Processes and the fundamental importance of the proportioning flow principle for fuels that tend to fractionate on vaporization.—Importance of specifications for mixtures and relation of proportionality to other factors 55

PART II.

Carburetor patents of the United States.—Distribution through the official classes and subclasses, and division into, "Proportioning flow carburetors" and other subjects 71

(a) List of all the patents with number, date, inventor's name, and title of the patent for each one of a selected group of official and subclasses, of classes 48 and 123;

(b) Cross reference patents of the official cross reference list for the same group (a);

(c) List of selected patents from other classes and subclasses that contain some carburetors with similar data for each;

(d) Cross reference patents for the group (c).

PART III.

New classification and assignment of carburetors 145

(a) New classification of carburetors of the "proportioning flow" type, on a rational basis of similarities and differences, both of structure and of functional operation 145

(b) Assignment to these new classes and subclasses of all United States patents of the "proportioning flow" type, found in the official lists of Part II, (a), (b), (c), and (d); constituting a new list of all United States patents containing proportioning flow carburetors arranged according to the new classification 156

PART IV.

Structural characteristics and functional operation of each of the new classes and subclasses of proportioning flow carburetors with illustrations of the variations in form for each subclass taken from the patent drawings of typical cases 169

Summary of characteristics of new classes and conclusions on type 440

PART V.

Flow laws for gases and liquids, with special reference to air and gasoline, in passages of the sort found in carburetors as to form and size.—Review of coefficients or test data found in the literature of the subject, without any new experimental determinations, but indicating the need of such:

(a) Formulas for the flow of fluids, based on hydraulic and thermodynamic laws 453

(b) Actual flow rate for gases.—Result of experimental investigations.—Coefficients for formulas given in Part V (a) for gas flow 459

(c) Actual flow rates for liquids 464

PART VI.

Page.

New experimental determinations of the proportioning accuracy of a selected number of typical American commercial carburetors under variations of flow conditions:

(a) New test results on carburetor proportionality 471

(b) Discussion of the literature of carburetor tests 544

PART VII.

Conclusions and recommendations 551

REPORT No. 11.

PART I.

By Charles E. Lucke.

INTRODUCTION—NATURE OF THE PROBLEM AND SCOPE OF THE PRESENT CONTRIBUTION.

Any effort to improve the gasoline engine and to perfect it for use, in aeronautic, marine, and land transportation service, must proceed along a series of more or less parallel coordinate lines of attack, each concerned with some one independent phase of the problem, after a general review has indicated the nature of these subsidiary problems and their relations. Such a general review with special reference to aero engines has already been made and formed the subject matter of the report of last year. In addition to the specific problems of engine design proper, involving arrangement of parts, selection and treatment of materials, and determination of best diemnsions for strength or life on the one hand and large mean effective pressures with high thermal efficiency at high speeds on the other, there is another group concerned with what might be termed the engine auxiliary functions. These latter include ignition, lubrication, cooling, and last, but most important of all, carburetion. It is most important because it is concerned with the making of suitable mixtures, without which the engine can not be a success no matter how perfectly the other phases of the engine problem may be worked out. It bears the same relation to the gasoline engine as steam making does to the steam engine, and the carburetor, with its connections by which the result is attained, is just as important to the former as is the steam boiler and its connections to the latter. This being the case, it is logical and proper that this the second report, and the first one following the general review, should be concerned with the carburetor and the problems of its design. The complexity of the problem of carburetor design, from the scientific engineering standpoint as distinguished from the empiric cut and try one, can hardly be overrated, and the difficulties involved are realized only by those familiar with the question by reason of experience and extended study. It involves not only many unknown facts and relations of the physics of flow of this class of liquids in small passages and of air at variable rates through every conceivable shape of duct and orifice within certain limits of size, but it also requires the crossing of the borderland of knowledge on the physical chemistry of these complex fuels, their vapors, and vapor air mixtures; fuels which are solutions of many and variable constituents, all of them having tendencies under

certain conditions to polymerize. In addition to these difficulties of a physical-chemical sort, there are involved two other groups, the first being the usual one of structural design, and the second that of definition of the object to be attained. With reference to the latter it must be admitted that there is no convincing experimental proof avaliable from engine tests to definitely establish just what sort of mixtures give the best results in engines; whether, for example, they should be constant or variable in proportions of air to fuel, and whether also they should be dry or wet, and if the latter, how much moisture is permissible and in what form. To be sure, opinions and deductions of some value can be based on indirect observations and on certain principles, but works of importance should be based on proved facts and not on opinions or deductions. Pending the establishment of the required physical-chemical data and the specifications of suitability of mixtures from the engine standpoint, both of which must constitute a separate series of investigation, the problem of carburetor design may be approached with some profit from the qualitative side.

Design of any appliance or machine must be undertaken qualitatively before any quantitative work is warranted, the former being concerned with the form and arrangement of the parts and the latter with their dimensions. Qualitative design, the fixing of the nature and form of the several necessary structural elements and their mutual relation or arrangement, must satisfy ten independent sorts of requirements—first, functional, and second, constructional. With reference to the former it is clear that to make the apparatus work there must be provided certain parts suitably arranged and the selection of such forms and arrangements of parts as would seem to promise the sort of action or function desired, is termed invention when the same thing has not been done before in the same way, otherwise it is merely the first phase of qualitative design. The second or constructional requirement for qualitative design imposes a limit on the first, dictated by the tools and processes of the shop. However nice and proper an appliance or machine scheme may be from the functional standpoint, it is obviously of no value if it can not be constructed and of little value if the construction is difficult, so as to involve excessive cost, inaccuracy, or some other element of unsuitability.

Quantitative design, the determination of proper dimensions, for the parts as selected and arranged, must also meet two independent requirements, or rather there are two sets of dimensions that must be separately determined because they have different objects. The first phase of quantitative design must fix those dimensions that are concerned with functional operation and directly supplement the selection of form and relation of structural elements, so that not only will the sort of result desired be attained, but also in just the right degree. The second step in the whole series fixes those dimensions of the parts that insure, with due reference to the materials, suitable strength and stiffness to resist rupture and undue deflection, respectively, under stress, and that insure suitable life to parts subject to destruction by wear or corrosion, for example.

Applying these general principles to the case of carburetor design, the first phases of both the qualitative and the quantitative design

are of controlling importance, both of the second phases dwindling to almost negligible quantities in comparison. For example, the second phase of quantitative design, the fixing of dimensions for strength and life, is almost, if not quite, eliminated by the fact that the parts of carburetors are subjected to no stresses that can not easily be resisted by the thinnest metal that can be cast, and that, so far as life is concerned, there is no corrosion with the brasses and bronzes in use. While there is some wear in those carburetors that have moving parts and some permanent set in springs, it also is true that good carburetors need have neither wearing parts nor springs. Again, the second phase of qualitative design, which imposes shop limitations on form and arrangement, requires no special treatment for carburetors over any other device or small manufactured metal product made mainly or wholly of cast metal with some rough and some accurate machining, involving only light cuts and short operations easily carried out with small tools of standard form with special jigs and fixtures or with special tools.

It appears, therefore, that an investigation of carburetor design must be concerned almost entirely with the first phases of both qualitative and quantitative design, the selection of these schemes of form and arrangement of parts that promise the right sort of functioning and results, and then dimensioning the parts so they will produce the desired kind of result in the required degree. These two steps might well be called qualitative functional design and quantitative functional design, respectively.

There are two good reasons why qualitative functional design should be undertaken before the quantitative—first, because the necessary physical data for the latter have never been determined, only a few isolated facts being available, and second, because the determination of dimensions must necessarily follow a decision on form, or otherwise the more that form alternatives can be reduced to a minimum, the less is the variety and scope of the pertinent physical data required for application to them.

This report is concerned almost exclusively with an analysis of the question of qualitative design, not only because it is logically the first step to undertake but also because its scope is so very wide and the amount of available material requiring review so large as to have taken up all of the time available.

Quantitative design has been approached but not actively attacked; only so much has been done in this direction as to point out the need of thorough investigation by showing the importance and the present lack of exact data.

Qualitative functional design of carburetors must begin with an examination of alternative processes of carburetion, and a selection of one or more such processes as seem promising must be made before any attempt is made to scheme out the form and arrangement of the parts that together shall constitute the carburetor. Carburetion as a process is in the broad sense essentially the same as humidification, the former dealing originally only with the hydrocarbon products of petroleum but now with any liquid fuel including the alcohols, the latter with water, and both with vaporization of the liquid in contact with air, the vapors and the air mixing more or less homogeneously. The thermodynamic laws of such vapor-air mix-

tures as result from carburetion or humidification are pretty firmly established, and the most important of these, with reference to the present object, is that group relating the partial pressures of the vapor and the air in the mixture to the proportions of vapor and air and to the respective molecular weights. In accordance with these relations, a mixture of vapor and air in any desired proportions can be obtained by maintaining an intimate contact between the liquid and the air until such time as saturation results by the building up of the partial pressure of the vapor in the mixture to a value equal to the pressure of saturated vapor corresponding to the temperature. Thus the proportions are determined by the vapor pressure-temperature law of the liquid, by the actual conditions of contact or intimacy between the two, and by the temperature mixture during the time of contact. Of these three factors one is a physical property of a given liquid and the other two represent variables of use, and are subject to control if the apparatus is suitably designed. The vapor-pressure curves of the more common simple liquids have been determined, and for them these principles point directly to a simple and highly effective process of carburetion in definite predetermined proportions, the process being to maintain for sufficient time a close and intimate contact of the air and the liquid, such as may be done by blowing air over, bubbling it through the liquid, spraying the liquid in the air, or stirring and heating the two in a chamber, meanwhile keeping the temperature constant at the value required by the vapor pressure-temperature curve to give the desired proportions.

Such a process of carburization may properly be called evaporative because the proportions are fixed by the evaporative conditions. The liquid vaporizes, and vapor is added to the air until equilibrium is established between the vapor pressure of the liquid, and the partial pressure of the vapor in the mixture in contact with the liquid. This evaporative process of carburization to given proportions is almost ideal where it is feasible, but unfortunately its value is confined entirely to the simple liquids that have definite vapor pressure-temperature relations and the same relations for every part of the liquid. The only liquids that satisfy this condition are those that are single chemical compounds and among the fuels these are benzol and the pure alcohols, the more common fuels such as the impure alcohols or alcohol-water solutions, and all the products of petroleum, including not only the light but the intermediate constituents, do not satisfy the condition for proper evaporative carburization in given proportions by the simple evaporation process. These latter liquids fuels are solutions of many constituents one in the other, each constituent to be sure is a simple hydrocarbon with fixed physical properties, but the solution has variable physical properties. The presence of one substance in solution in another, affects its vapor pressure in a fairly well-known way, but there is no means of predicting what is the resultant of 10 such, each affecting the other. Physical chemistry has not advanced far enough to answer such a question, and it is doubtful if the answer would be of much value even if it could be found in the absence of equally definite, simple, and practical analytical means of identifying and evaluating the separate hydrocarbon constituents of such solutions as the gasolines and kerosenes, which organic chem-

istry so far has failed to discover. From the practical carburetor standpoint enough is known to definitely condemn the simple evaporative proportioning process without such scientific data, because it is clear that those constituents that have the highest vapor pressures will exist in the vapor air mixture in larger proportions to those that have low vapor pressures, than they did originally in the liquid mass, and that, as evaporation proceeds there will be a fractionation that leaves the heavy constituents behind. The mixture proportions in such cases will be fixed as much by the ratio of constituents in the liquid as by the vapor pressure of any one—by the intimacy of air contact or by the temperature—but the ratio of constituents in the liquid varying as it does as evaporation proceeds, the proportions of vapor to air in the mixture can not possibly be controlled automatically by any simple and practical means.

The condemnation of the evaporative means of proportioning as a carburetion process for engine use for all liquid fuels that fractionate at once removes from consideration a very large number of older carburetors designed for and used largely in connection with the manufacture of illuminating or fuel gas for pipe distribution and confines attention to a newer group of carburetors in which the proportions of air to fuel are subject to mechanical control and are quite independent of the constituents of the fuel or their vapor pressures.

Mechanical proportioning is an essential element of any practical carburetion process where complex fuels, like the petroleum distillates, are to be converted into vapor air mixtures in controlled proportions for introduction into an engine cylinder; but, of course, mechanical proportioning does not of itself constitute a carburetion process except under one condition. If the vapor pressure of the fuel, or, rather, of its heaviest constituent, be high enough, then mere introduction of the fuel into the air, especially if both be flowing through passages that produce eddy mixing currents, will result in immediate vaporization and the formation of the desired mixture. All the older gasolines of 76° Baumé and upward had this property, so for them a mechanical proportioner that feeds a measured amount of gasoline into an air stream does in reality constitute a proportioning carburetor. The present-day gasolines, ranging but little above 60° Baumé, and in some cases lower, have some constituents so heavy and with vapor pressures so low as to require either special spraying and stirring elements or heaters to produce a suitable homogeneous mixture, the making of which constitutes carburetion. Nevertheless such proportioning devices are also termed carburetors, even though vaporization is not complete, because they produce mixtures on which engines can be operated, and since the proportions are established by a sort of metering action of the fuel by the flowing air, and not by the vaporizing properties of the fuel, they have been named "proportioning flow carburetors" in this report.

For all gasolines, kerosenes, or other petroleum distillates, and any other complex fuel to be used in engines, proportioning flow carburetion processes must displace the older evaporative processes of the gas industry, so attention must be concentrated on the various ways in which the air flowing toward an engine cylinder may be made to proportionately meter, receive, and become mixed with the amount

of fuel it can support in explosive combustion quite independent of just what degree of vaporization or just what proportions will work best in a given engine on the assumption that these are independent variables.

The pure case of proportionate flow carburetion is that in which the air flow directly, without the medium or interposition of any connecting mechanism, does of itself induce or produce the fuel flow in amount always proportionate to the amount of air, simultaneously mixing the two more or less actively with or without the addition of heat. This process depends upon the laws of flow of air and of liquid fuel, relating rate of flow to pressure drop or flow head, and, in general, it assumes that the suction stroke of an engine piston establishes a vacuum of some degree in every portion of the air entrance passage, which vacuum varies regularly with the quantity of air that will flow under its impelling influence. It also assumes that if from a supply of fuel at a constant hydraulic head a connection be led to a fuel nozzle somewhere in the air passage, the static head with reference to the nozzle being ideally zero, then no fuel will flow unless air is also flowing, because of the common vacuum relation, and fuel flow will increase with air flow as the vacuum increases. For such double flow to be truly proportionate and in constant ratio it is clear that both the liquid and the air flow must follow similar physical laws and that the weight of each must bear the same algebraic relation to the vacuum that is responsible for the flow. In the absence of a pair of air and fuel passages of such form and relative disposition as would have similar flow laws, then some means of automatic correction of the proportions become necessary to restore the desired ratio and to maintain it, no matter how the rate of flow may vary, so as to satisfy the demands of engines operating at variable speed and load.

Between these two basic processes of carburetion—the "evaporative" and the "proportioning flow"—there may be found a series of minor alternatives, or special modifications, some of them standing more or less apart and others lying midway between and involving both to an equal degree. As an example of the latter a truly evaporative carburetor of the tank and wick type may be modified by feeding fuel to the wick by a proportionate-flow device instead of allowing the wick to pick up and feed fuel from the tank by capillarity. Evidently an apparatus of this sort might be classed under either process. If the proportionate-flow feeder were so regulated that no fuel accumulated on the wick or in the wick chamber, then evaporation does not fix the proportion, but the proportionate feeder does, and the device is a proportionate-flow carburetor. On the other hand, if the proportionate-flow feed delivered an excess of fuel over what could be carried off by the air passing the wick, some fuel would accumulate on or about the wick, and the proportions of the delivered mixture would be fixed by the evaporative and not by the proportionate-flow elements, and the device would be an evaporative carburetor. Fortunately, such cases as this are rare, or there would be more confusion than now exists. There is generally no difficulty in interpreting the action of a given apparatus, or, to state it otherwise, there are very few cases where the basis or principle of proportionality depends on the rate of feed, the adjustment or other operating conditions, within the working range.

Another sort of mixed process is that of direct injection of fuel by a pump into the air, the pump being driven by the pulsations of the air pressure in the intake passage or by the engine directly, and the delivery of fuel being made into the air on its way to the cylinder through the intake passages or directly into the cylinder after the air has entered. These are not regarded as proportionate-flow processes, because in general there is no definite proportion maintained; but also because the air-flow rate is not of itself responsible for the quantity of fuel fed. If a constant-speed engine cylinder took the same amount of air every stroke and a pump, driven from the air pulsations or from the engine, delivered the same amount of fuel at the same time, then the fuel and air quantities would clearly be in proportion, fixed by the displacement of the main piston and pump plunger, respectively, with corrections for volumetric efficiency. While this constitutes one series of mechanical proportioning means, the cases are special, as also is the engine-operative condition of constant speed and load, to which they are applicable. All direct-injection engines with or without compressed-air sprays constitute a quite independent class, characterized by mixture making directly in the cylinder and have practically nothing in common with the carburetor class of engines making mixtures externally. Pump deliveries to carbureting chambers in the intake passages, when the pump is driven by the engine, or, in fact, in any way except by the movement of the entering air, are excluded from the proportionate-flow class because the flow is not essentially proportionate. They constitute an additional class between the truly proportionate-flow and the direct-injection classes.

When the air flow actuates an air motor equivalent to an air meter and this motion in turn actuates a fuel pump, then the combination is truly a proportionate-flow carburetion system, operating on a constantly metering volume ratio at all rates of air flow, and in all respects equivalent to the vacuum-controlled flow of the two fluids through two separate passages to a common point of mixing.

With this general review as a basis, the search for possible forms and arrangements of parts making up the carburetor proper to operate under the process of proportioning-flow carburetion may be undertaken, and all the available suggestions for the construction of proportionate-flow carburetors collected and compared. This comparative study of the qualitative design of proportioning-flow carburetors must begin with the collection of examples from any source, which must then be grouped into typical classes on the basis of functional or structural similarity, so that class may be compared with class before any attempt is made to analyze differences of detail within each class.

The best source of information for this purpose is clearly the Patent Office record of inventions, and this has accordingly been made the basis of the study which constitutes the bulk of this report. From the official classification list and the definitions of each official class and subclass a selection was made of those that seemed likely to contain patents on carburetors. To assist in this work of discovering the carburetor patents of the United States the services of a competent patent lawyer were enlisted, and under his direction searchers were set to work in the Patent Office, where, aided by its officials, a list of United States carburetor patents was prepared

and copies collected for study and comparison. The detailed steps by which this list was made and copies of each patent secured are given in Part II, with the patent number, date, title, and inventor's name, arranged according to the official classes, subclasses, and cross references.

Having secured copies of these patents, which numbered, after eliminating duplicates, about 3,400, a surprisingly large number in view of the fact that the art is comparatively a new one, every patent was read and reclassification begun as a basis for the comparative study. The first step in this reclassification divided the patents into the two groups of "proportioning-flow carburetors" and "other subjects," the latter including parts, attachments, complete engines, injectors, and all "evaporative carburetors." This made about an equal division and incidentally brought out the interesting fact that practically all the older carburetor patents are evaporative, while practically all the recent ones are proportioning flow as to broad process, the latter beginning about the year 1900 but not becoming really numerous until about the year 1910. This shows that the proportioning-flow carburetor art is about 17 years old, the official life of a patent, and that, therefore, most modern carburetors fall within the patent life and must be either themselves the subject of an active patent or similar in some respects to the disclosures of one or more such patents.

Following this division of United States carburetor patents into "proportioning-flow" cases and "other subjects" the former group was restudied for the purpose of subdivision into classes according to some rational basis of similarity. This step brought out the fact that the present official classification is not a good one, so deficient in elements of distinction as to make necessary the creation of a new classification before any comparative study could be made at all. This new classification has been worked out and the "proportioning-flow" carburetors assigned to places in it in Part III of this report. The very great labor involved in reading, reclassifying, and comparing these thousands of patents in the limited time available has probably led to some errors, which can only be removed by a subsequent checking, but it is believed that the results reported are correct in the main and mistakes are confined to individual cases. To make this sort of study quite complete and of the utmost practical value, not only to designers but also to patent lawyers interested in soliciting new patents or in litigations over existing ones, the new classification and relisting should first be checked and later extended to include the cases of the leading foreign patent offices. It is hoped that the value of so doing will seem to parties interested great enough to have the required funds made available.

Following the reclassification and relisting of the United States proportioning-flow carburetor patents the general characteristics of each new class and subclass is given and structural variations within each class illustrated by photographic reproduction of the drawings of typical patents, the number of which so reproduced is about 450. This illustrated review of the functional and structural characteristics of proportioning-flow carburetors is the subject matter of Part III of this report, which brings out a most amazing wealth of material as to form and arrangement of parts. Even a brief review of this section of the work will convince the most skeptical that so

far as qualitative design of proportioning-flow carburetors is concerned there is little to be desired, and that whatever may be lacking in carburetors or carburetor design is mainly quantitative in character. An effort is made in this comparative study of functional characteristics of the new classes and subclasses to point out the most promising ones from the standpoint of automatic proportioning at any rate of flow, so as to stimulate inventive and designing effort in this direction. Concentration of thought along the more promising lines should result in greater and more rapid advance and perfection of the needed appliances than the scattering of the same effort over the whole field, which includes some types or classes of very much less promise. Of course it is hardly to be expected that there will be a general acceptance of the guides offered, especially among inventors interested in what have been reported as the less promising groups, as the inventive mind normally resists guidance. However this may be, it is hoped that this, the first systematic effort to bring some order into what has been a most chaotic situation, will bear sufficient fruit to justify the serious painstaking labor that has been expended.

No arrangement of parts intended to act as a proportioning-flow carburetor can be conceived that does not involve some mental assumption of a law of flow for the fuel and for the air, relating rate of flow to pressure drop or vacuum. Therefore in every one of these many hundreds of patents there is indirectly involved some such assumption by the inventor, either consciously or unconsciously. With only a few isolated exceptions, not one of them gives any inkling of what flow law is assumed to hold in his device, although nearly all assert their object to be the production of a device that either holds the proportions constant under all conditions or gives some specific sort of control over proportions. In some cases it is quite clear that there is no understanding of the general principles of fluid flow at all, while in others the principles have clearly served to guide the design which, therefore, is at least qualitatively correct and requires only the application of the numerical values in the flow equations to its dimensions to be quantitatively correct also or which can be made correct experimentally without solving the equations numerically. One pretty common violation of the principles of flow for air is neglect of its critical pressure drop limit, according to which no increase of air flow through an orifice takes place after the pressure drop through it exceeds a given value somewhere about four-tenths of the absolute pressure on the supply side. This becomes a most serious interference with proportionality when it is remembered that it does not apply to the liquid orifice acted upon by a similar pressure drop, so that however regularly the air and fuel may increase together as pressure drop increases from zero there comes a time when the air flow ceases to increase while the fuel goes on. Other violations of a general character include the implied assumption of a constant coefficient of efflux for both fuel and air orifices, which may actually vary 100 per cent, also neglect of the differences between capillary and orifice types of fuel passages and the effect of the pressure drop itself on the law of flow for a given passage.

Without undertaking any new experimental determinations of the flow laws and their coefficients for air and gasoline in passages

of the forms and size appropriate to carburetors, it is important that the known principles and facts on the subject be reviewed for two reasons, first to indicate the extent of the justification for the implied assumption of some sort of flow law in all of these inventions, and second to clear the way for such new experimental determinations as may be necessary for undertaking their quantitative design on a natural basis. This review of existing flow laws and flow data forms the subject matter of Part V of this report and proves beyond question that present knowledge is wholly inadequate, and that new experimental determinations must be made just as soon as possible.

Discussion and argument can never be as convincing as proved facts. On the question of proportionality in engine carburetors, no amount of reasoning as to why one of them should or should not be characterized by constant proportions as flow rate changes, can equal in value an experimental determination. For this reason 10 of the leading American carburetors were secured by loan from their makers with the assistance of the Automobile Chamber of Commerce, and were subject to tests for proportionality of air to fuel over a wide range of flow rates. The methods and apparatus used, together with the results obtained, are given in Part VI, the last section of this report. While, as had been expected no one of them was able to keep the proportions constant, as the rate of flow was varied either by throttle position at a constant engine speed or by engine speed at a constant throttle position, yet the actual or possible approach to constancy for the whole group is wonderfully good, considering the absence of exact flow law data and the fact that practically all are products of cut and try or empiric design, as distinguished from the rational or scientific. In some cases the results are so very good as to lead to the belief that substantial constancy within a few per cent of actual constancy of proportions of air to fuel is within reach and will be generally obtainable in carburetors of considerable variety as to form, as soon as flow law data becomes available to designers. Furthermore, should it appear after a series of engine tests on different mixtures that constancy of proportions is not desirable, but that a certain rate of leaning or enriching is desirable as load or speed varies, there is equal promise that it can be obtained. In short, there is every reason to believe that the period of pure invention where wondering, guessing, and assuming constitute the only guides, a period typical of the youth of any new art, is about to give way to the second and permanent stage of designing where proved facts and authentic data form the basis of practice. Such a situation can be most quickly brought about by making the experimental determinations recommended in the "Conclusions," and giving the results the widest possible publicity.

While proportionality control is the prime consideration in any carburetor, it is not in itself sufficient to make a good carburetor, and while proportionality must be controlled through suitable arrangements of properly formed and dimensioned parts based on established flow laws, there are certain other structural elements necessary to a practical carburetor. Finally there is reason to believe that there must be some elements of carburetor design concerned with adaptability to a given engine or to definite operating

conditions of a given engine or to a given fuel that may not be brought out by confining the study to proportions alone, or to steady flow alone, or even to any particular sort of pulsating flow. These are all matters worthy of careful consideration, but somewhat intangible and elusive in character, certainly at the present time. Partly for this reason and partly because all the time available has been consumed in reaching the point here reported, these matters or the items concerned with them can not be given more than a brief notice, which is included so that they be not forgotten or their importance minimized.

Next to proportionality control in basic importance in mixture making comes mixture quality defined by wetness, superheat and pressure, or in general by its physical condition. Other things being equal, mixtures having higher absolute pressures in the intake passages should develop mean effective pressures that are directly proportional to the absolute pressures, and this is a matter of considerable importance in aero engines or others where least weight per horsepower is a prime factor. Some classes of carburetors present fixed areas of air and mixture passages for the flow, while others increase the area as flow rate increases, and therefore should be capable of developing higher mean effective pressures and more power in a given engine unless some other variable or factor neutralizes this possibility. The importance of this mixture pressure factor in mixture density is recognized in some of the patents which disclose fans or blowers driven from the engine and placed either before the carburetor or between it and the engine. This arrangement seems to have some possibilities worth investigating, because the power to pump the charge is far less than the promise of increased engine output, though of course there must be a decrease of thermal efficiency. Adding to such blowers or fans a barometric type of control of delivery pressure would seem to offer a means of neutralizing the effect of altitude on engine power which with aero engines may be considerable.

Such moving parts as fan rotors in the path of the mixture make excellent mixers or mixture homogenizers, and homogeneity of mixture is a matter of coordinate importance with proportionality and density. While with the small passages suited to small engines, a stream of gaseous fuel or of very light gasoline may be relied upon to automatically mix with the air and produce a reasonably homogeneous mixture by the action of the header and valve pocket eddy currents alone. This is not true with heavy gasolines that can only partially vaporize in air at atmospheric temperature, nor is it true with large engines developing several hundred horsepower in a single unit. The heavier the fuel and the larger the intake passage, the more important becomes the matter of specific mixing or homogenizing means involving either fixed or rotating parts. Any unvaporized liquid fuel must be distributed as uniformly as possible through the air in the form of the finest possible fog, and heavy drops or wall streams of liquid must be eliminated if any good effect of proper proportionality control is to be secured.

As an alternative to such stirrers or fine spray fog distributors of unvaporized fuel through the air, the mixture may be heated to remove the liquid, or a light easily vaporizable fuel may be substi-

tuted for the heavy. At the present time, in the absence of exact data on the effects of any liquid in the mixture as to degree, and relying on the established fact that much liquid not specially treated with reference to fog making and air mixing produces very bad combustion, it is recommended that for aero use at least nothing but the lighter gasolines of 76° Baumé or better be used. Some of this grade of gasoline was obtained for the purpose of proportionality tests from the American Oil Works of Titusville, Pa., and its superior vaporization over the common fuel gasoline of the market is proved by the larger drop in temperature observed and reported in the tests as the mixture formed in the carburetor. While such gasoline brings a higher price than the common heavy grade, the excess is not very much considering the superior vaporizing qualities, and such differences in cost as exist are matters of negligible importance for military aero work on this oil-producing country.

The mixture heating alternative to using sufficiently light grades of gasoline for making homogeneous dry mixtures or to spraying means of distributing unvaporized liquid through wet mixtures is one that requires exact experimental tests to determine its comparative value. It is of importance only with heavy fuels carrying constituents that will not vaporize without more heat than can be derived from atmospheric air. While heaters for such mixtures are now available, it is not possible to say whether it is better for a given engine to use wet mixtures with stirrers or fog distributors or to dry them by heat, starting with heavy fuel; or to do neither, but, on the other hand, substitute light fuel. Of course, in the absence of a limit to supply and cost, the last is clearly the wise course. Any heating of the mixture decreases its density just as does a reduction of pressure, so heating must not be resorted to unless the gain from its use exceeds the value of the power lost, and this gain is almost exclusively a gain in thermal efficiency due to better combustion, with a corresponding improvement in lubrication and interior fouling conditions over wet, cold mixtures. No better proof of the situation is available than the two related established facts (*a*) that maximum power and maximum efficiency are not simultaneously obtainable with any but dry mixtures, and (*b*) that the carbon monoxide and the free oxygen in the exhaust can not both be brought to zero at the same time, except with dry mixtures. If therefore heavy fuels must be used, which does not seem to be the case for aero service, it is necessary to experimentally determine the best degree of wetness for both power and efficiency, and the comparative engine performance with dry mixtures made dry by mixture heaters. These are matters of coordinate importance with proportionality for which similar data are required to establish the allowable or required range from constancy if there is any at all for best all-round engine performance. Taken together the results of such tests should lead to the establishment of specification for mixtures best suited for a given engine with the same sort of precision that is now in general use in the steam and vacuum specifications for steam turbines. Given such mixture specifications and the suitable basic scientific data on carburetor phenomena, the carburetor designer may then follow the same general methods used by the designer of steam boilers or condensers.

As to proportionality itself, it must be assumed, pending experimental proof to the contrary, that engines require mixtures in constant proportions because of the chemical nature of the reaction and the thermodynamic requirement that maximum power and efficiency should result from mixtures leaving no unburned fuel and having the highest calorific power per pound of mixture. While among carburetor and engine men there may be found opinions that under this or that condition the mixture must be rich, it is also true that air measurements are practically unknown among them, and therefore the proportions can not be known. Many such cases investigated have led to the conclusion that the meaning intended is rather that the mixture must be made richer than it was or than at other times and not that it must depart from actual constancy.

There are some subsidiary problems of carburetor design worthy of notice, even though time is not available for their investigation at this time. The first group of these includes the several effects of differences in the inertia of air and gasoline, the engine-operating conditions that bring them into action, and the corrective means to be introduced to meet interferences with proper engine working. No matter how many cylinders there may be nor how high the speed, the flow through the passages of a carburetor and through the intake header between it and the inlet valve ports is not a steady but a pulsating flow. There is throughout the mixture making and supply system a series of more or less irregular pressure and velocity waves, and there must be some reflections, returns, and synchronizing heat phenomena. Practically nothing is known of these conditions except that they exist and that should the pulsations vary in amplitude or periodicity bad effects must follow, because in such a case the difference between the inertia of air and gasoline passing through its carburetor feed passages or passing through the manifold passages beyond the carburetor must cause a lag of flow, positive acceleration producing a fuel lag and negative acceleration an air lag. The natural period of oscillation of the fuel in its float chamber and feed passage may synchronize in beats with the mixture pulsations, producing periodic proportionality changes, and the surging speed fluctuations observed in some engines operating on wide-open throttle with a steady lead may be traced to such sources.

Any sudden change of flow rate in the carburetor, whether produced by a quick throttle movement or by a change of lead torque without a throttle movement, must produce mixture proportionality changes by inertia, which, even though momentary, may yet last long enough to seriously interfere with operation or even stop the engine under lead and thereby condemn as unserviceable an otherwise perfectly good carburetor. A sudden increase of flow rate will tend to produce a lean mixture, because the liquid fuel accelerates more slowly than the air, while a sudden decrease of flow rate produces the reverse action, the mixture enriching and in some cases the liquid flow continuing after air flow has stopped enough to visibly spill fuel. Normally such actions as these are most commonly produced by quick movements of the throttle, by means of which the flow rate may be changed in a fraction of a second from practically zero to a very high maximum of several hundred feet per second. Throttle closure is not so serious as throttle opening,

because mixtures momentarily become rich instead of lean and do ignite even when very rich, because also in extreme cases of sudden complete closure the main fuel jet, which is tending to make the mixture overrich, is thrown completely out of action in many modern designs, a low speed or idling jet being brought into action as an alternate. It is on quick throttling opening, suddenly demanding more power, that greatest difficulty arises, because then the mixture naturally tends to become lean by inertia, and, having so low a flame propagative rate, produces back-fires or completely misses fire in extreme cases, the least evil effect being a lag in acceleration of the engine. This has been met by the introduction of the accelerating cup, many forms and connections of which are illustrated in this report, some used in connection with idling jets and others independent. The accelerating cup, so called, is a small chamber, usually shunt connected to the main fuel passage and between the jet and float chamber, so arranged that it fills on slow, steady running and empties through the main or through a separate nozzle whenever the acceleration conditions tend to make the flow through the regular fuel channels insufficient, the fuel from the cup being added to compensate for the momentary main jet leanness. While the accelerating cup is the present solution of leanness due to inertia developed on accelerating the flow and the idling jet is in one sense the equivalent for a decreased flow, the latter also serves another useful function, that of relieving the main passages of the requirement of maintaining proportionality over the lowest ranges of flow rates, and both are comparatively recent developments in this carburetor field, at least so far as adoption and use are concerned.

It is well to point out here that neither the idling jet nor the accelerating cup must be confused with the lifting tube, which is perhaps a still more recent development forced into use by heavy fuels which resist vaporization and which at low flow rates will not rise with the air in the mixing passages, because the air velocity is not great enough to overcome the gravity of the liquid. The lifting tube is a small passage in parallel with the main one, and either a part of it or quite separate, through which the velocity is always great enough to lift the fuel no matter what the flow rate or throttle position, and at high flow rates the lifting tube may remain in action or go out. In any case the fuel passing up the lifting tube has come from the main and not from a separate fuel nozzle, as is the case with the idling passages.

Liquid inertia versus that of air or vapor also plays a part in the mixture-distributing header or intake manifold between the carburetor and the several inlet-valve ports whenever any unvaporized liquid is present. This liquid will not turn at bends in the same proportionate way as does the gaseous constituents, but the walls will act like separators, tending to collect the liquid in streams, which run along the surfaces where the mixture velocity is least. Therefore header design has become a part of the problem of carburetor design since heavy gasolines began to replace the old and once universally used light ones.

Another group of subsidiary design problems is concerned with the supply of liquid to the metering nozzles and involves the fuel passages, the float chamber, float, and float valve, and their design

with reference to tilting or vibration on the one hand and to clogging of small passages with dirt or gum on the other. While all carburetors are not provided with float chambers, some having overflow chambers especially for stationary large tractor use and a few having diaphragm chambers or pressure feeds without any fixed level auxiliary chamber at all, it is nevertheless a fact that practically all carburetors used in transportation work have constant-level chambers, float-valve controlled, from which the metering fuel nozzle takes its supply. Both the designer of the carburetor and the user of the instrument assume that the passages through which the flow is to take place have a definite area and that the level in the float chamber is at a definite distance below the fuel-nozzle tip. Should the fuel passages become clogged with solid matter, due to a failure to properly filter the fuel or clean out a loaded filter member or with gumming matter that is now found occasionally to collect from the fuel itself, it is clear that all calculations and experimental perfection have suddenly been rendered useless. It is not sufficient to assume that these things will not happen, but every carburetor should be so constructed as to make it easy to clean out any of its passages and without requiring the poking of wires into delicately adjusted fine metering orifices, so that their area is changed and the original proportionality destroyed. For the same reason any fuel valves must be so designed that battering or wearing of the seat or valve is either impossible or immaterial so far as proportionality is concerned.

Perhaps as common and serious a mechanical interference with proportionality as any is the variations in float chamber level normally assumed to be constant but just as often not. It is easily possible for the level to change as much or more than the head producing the fuel flow at low flow rates, and if it does there must follow a variation of proportions of a hundred per cent. Fortunately at the normal working flow rates the possible variation in float chamber level is a negligible fraction of the fuel flow head in most carburetors, but in some of them, those in which the vacuum increases least with flow rate, the effect is more serious, and as there are carburetors that produce the most dense mixtures the matter is one of importance. Aside from leaky float valves, or valves of insufficient size, or valves operated with improper linkage to the floats, or having list motion in the linkage, all of which may be responsible for changes of level that should not be permitted, and all of which are easily removable by good mechanical design once they are recognized, there are some operating conditions that cause trouble of a deeper seated kind more difficult to remove. These are tilting and vibration, both of which are apt to be exaggerated to the limit in aero engines. In any but an annular float chamber having the metering nozzle at the center, tilting changes the hydraulic head on the nozzle and when the flow inducing vacuum is small at the nozzle tip, this change of head by tilting may be an appreciable part of the whole flow head and proportionality destroyed. This would seem to be an argument in favor of the annular over the side-connected float chamber and important in proportion as the vacuum at the fuel nozzle is low, though negligible when it is high, but for high capacity light-weight engines the low vacuum has much in its favor as a

means of securing high density mixtures. However, the matter of float chamber form and position may be settled with reference to tilting there remains the vibration interference. Perfectly good carburetors have been observed to overflow their float chambers and spill as much gasoline as they used when vibrating under the shaking influence of the engine at some particular engine speed which seemed to synchronize with the natural period of oscillation of either the float itself or the free liquid in the chamber. No adequate remedy for this seems to be available nor for the overflow and spilling from an excessively tilted chamber, whether concentric or side attached, but it seems clear that this is a mechanical problem worthy of study, the design of constant level chambers that really maintain the level do not spill, in spite of tilting to any angle met in service even abnormally, and quite independent of any vibration.

REPORT No. 11.

PART II.

By Charles E. Lucke.

CARBURETOR PATENTS OF THE UNITED STATES.

As the most fruitful source of information, copies of all patents on carburetors listed in the United States Patent Office have been collected and later reclassified for comparative study. The location of these patents being a difficult matter, in view of the present official classification, the services of a patent attorney, Mr. A. L. Kent, of New York City, were enlisted, and under his direction the search was conducted, lists for the various subclasses prepared, and copies of each one, after eliminating duplicates, secured.

As a first step the following definition of what was wanted was submitted to Mr. Kent as a guide in his work:

For the purpose of this inquiry a carburetor may be defined as an appliance to be attached to an internal-combustion engine, adapted to receive air and liquid fuel, and to deliver to the engine an explosive mixture.

By this definition all appliances that are not distinctly attachments are excluded, but there is included everything that makes an explosive mixture from liquid fuel and air when attached to the suction or intake port of an internal-combustion engine. More particularly are we concerned, though by no means exclusively, with that group of carburetor appliances in which the suction of the engine through some passage produces a reduction of pressure at a given point and induces a flow of gasoline by reason of that reduced pressure. This class is often described as the jet carburetor, vacuum jet, suction spray, etc. This is the class in common use on present automobiles, motor boats, aeroplanes, tractors, railroad gasoline cars and locomotives, and a considerable number of gasoline stationary engines.

The foregoing was later supplemented by more specific instructions to disregard internal vaporizing devices; that is, those in which the fuel is vaporized in the engine cylinder or in a combustion chamber, including devices in which the fuel liquid is sprayed into the cylinder without being previously mixed with air, and devices in which a pump supplies the fuel liquid unmixed with air to the cylinder or other combusion chamber; and to list devices in which the fuel liquid enters the cylinder or combustion chamber as a vapor, including those in which the liquid is externally vaporized but internally mixed with a part or all of the air, devices in which a pump supplies the liquid to a charge-forming device, and carburetors and parts and attachments for operating with kerosene and other comparatively heavy oils.

With this information, the procedure followed is given by Mr. Kent, as follows:

I first went over with you the definition of subclasses in the two classes of the Patent Office Classification of Patents which at the time contained most of the carburetor patents; that is, class 48, gas, heating, and illuminating; and

class 123, internal-combustion engines; and the following subclasses were selected to be ordered complete, namely:

In class 48: Subclasses 144, 145, 146, 148, 149, 150, 150.1, 150.2, 150.3, 151, 152, 153, 154, 154.1, 155, 155.1, 155.2, 156, 157, 158, 159, 160, 163, 164, 165, 166, 167, 168, 169, and 219.

In class 123: Subclasses 119, 121, 131, and 132.

In order to be sure of getting all the patents in these subclasses, and also copies of patents cross-referenced into these subclasses from other subclasses, I had copies made of the subclass lists in the Publications Division of the Patent Office and then had these lists checked and completed from the bundles of patents in the Patent Office search room; and for each subclass I had the cross-reference patents in the bundles in the search room listed and then had these cross-reference patent lists checked and completed from cross-reference lists in the Classification Division of the Patent Office. The patents in the above subclasses were then ordered from these lists, excepting the cross-reference patents, and a single list of cross-reference patents from the several subclasses was made up, eliminating duplicates, and the patents on such list were also ordered.

These patents, about 3,500 in all, including several hundred of the cross-reference patents which were duplicates of patents belonging to the subclasses and which are omitted from list No. 2 above referred to, were, through the courtesy of the Commissioner of Patents, furnished by the Patent Office without charge after the purpose for which they were wanted by you was explained to the commissioner, and with the understanding that they were to be obtained only for such use.

I also had the following subclasses in class 123 and various other classes searched or examined for the purpose of selecting carburetor patents such as you were interested in:

Class 60: Subclasses 4, 28, 36, and 37 (searched).
Class 67: Various subclasses (examined).
Class 103: Subclasses 67, 78, 79, and 84 (searched).
Class 115: Subclass 13 (searched).
Class 122: Subclass 24 (searched).
Class 123: Subclasses 3, 4, 7 to 18, 20, 21, 22, 25 to 29, 34 to 59, 62 to 69, 71, 73, 75, 76, 78, 79, 82, 92, 97 to 106, 108, 110 to 118, 122 to 130, 133 to 142, 180, and 191 (all except a few searched, and a number of other subclasses looked into).
Class 126: Subclasses 249 and 251 (searched).
Class 158: Subclasses 36 to 73 (searched).
Class 160: All three subclasses (examined).
Class 162: All three subclasses (examined).
Class 230: Subclass 13 (searched).
Class 236: All subclasses (examined).
Class 257: Subclass 52 (searched).
Class 261: All subclasses (searched).

Most of the above subclasses were searched through, each patent being looked at. Some subclasses were only examined, or looked into, sufficiently to decide that they contained no patents of interest. In class 123, patents listed from subclass 29, oil engines, pump supply to air inlet, two cycle, were not ordered or included in lists furnished to you, as they were similar in the carburetors shown to patents ordered from subclass 28, oil engines, pump supply to air inlet, four cycle, which I understood from you were not of interest to you.

Searching the above subclasses resulted in the listing of some 2,500 patents, substantially all from classes 123 and 261. From these lists patents contained in the lists of subclasses ordered complete and their cross-reference patents were stricken off and only those remaining were ordered and listed in the lists which I am furnishing you of the searched subclasses.

As I have already explained to you, class 261, gas and liquid contact apparatus, is a new class which, although established some time ago with three or four subclasses, has just recently anad since the patents in subclasses ordered for you complete were obtained, been revised and expanded to include, in 126 subclasses, carburetors and other gas and liquid contact apparatus selected from various classes in which such apparatus might be found. The official definition of this class is:

"Apparatus especially adapted to produce an intimate contact between gases and liquids to exchange properties or mutually modify conditions.

"NOTE.—This class includes devices generally known as air and gas washers, air moisteners, carburetors, carbonators, jet condensers, coolers, heaters, and the like, operating by direct contact of the two fluids."

At the time the new subclasses in this class were established, a number of subclasses in other classes were abolished, including the following subclasses in class 48, which were listed and ordered for you as above explained, viz, subclasses 145, 146, 148, 149, 150, 150.1, 150.2, 150.3, 151, 152, 153, 154, 154.1, 155, 155.1, 155.2, 156, 157, 158, 159, 163, 164, 165, 166, 167, 168, and 169. Many of the patents from these abolished subclasses of class 48 were transferred to the newly established subclasses of class 261. In searching the subclasses of class 261, a large number of the patents in the subclasses of class 48 ordered complete were found and listed, but have been omitted from the list furnished you of patents found in this class to avoid duplication, as above explained.

I think that you have received a fairly complete set of carburetor patents of the kind in which you were interested, but further examination and search would undoubtedly result in adding a more or less considerable number of patents, although the Patent Office system of cross-referencing patents from one subclass to another makes it quite possible that the number of patents missed may be comparatively small.

Such patents in these lists as were found after examination to be proportioning carburetor cases have been marked with an asterisk [*]. These cases have been reclassified in accordance with the definition of the succeeding sections of this report, Part III, and they furnish material to illustrate the discussion of the characteristics of each of the new classes and subclasses, as reported in Part IV of this report.

The lists of carburetor patents here reported include:

List No. 1.—Patents in the subclasses ordered complete, arranged according to classes and subclasses, and giving number, date, inventor's name, and title of each patent belonging in each of the several subclasses, and the numbers only of patents assigned as cross-reference patents to each subclass.

List No. 2.—Cross-reference patents from list No. 1, with patents belonging in, or regularly assigned to, the subclasses of list No. 1 omitted.

List No. 3.—Selected patents from searched subclasses arranged according to class and subclass, with patents which appear in the previous lists omitted.

List No. 4.—Selected cross-reference patents from the searched subclasses, with patents which appear in either of the three previous lists omitted.

A. List of subclasses of the United States Patent Office Classification of Patents which were ordered complete or searched for carburetor patents, giving the official class and subclass numbers and titles of subclasses ordered complete, and class numbers and titles and subclass numbers of subclasses searched:

1. Subclasses ordered complete.
2. Subclasses searched or examined.

B. Lists of United States patents obtained and examined:

List No. 1.—Patents in the subclasses ordered complete, arranged according to classes and subclasses, and giving number, date, inventor's name, and title of each patent belonging in each of the several subclasses, and the numbers only of patents assigned as cross-reference patents to each subclass.

List No. 2.—Cross-reference patents from list No. 1, with patents belonging in, or regularly assigned to, the subclasses of list No. 1 omitted.

List No. 3.—Selected patents from searched subclasses arranged according to class and subclass, with patents which appear in the previous lists omitted.

List No. 4.—Selected cross-reference patents from the searched subclasses, with patents which appear in either of the three previous lists omitted.

A. List of Subclasses of the United States Patent Office Classification of Patents which were Ordered Complete or Searched for Carburetor Patents, giving the Official Class and Subclass Numbers and Titles of Subclasses ordered complete, and Class Numbers and Titles and Subclass Numbers of Subclasses searched.

1. *Subclasses ordered complete:*
   - Class 48, gas, heating and illuminating—
     - Subclass 144, carburetors.
     - Subclass 145, carburetors, regulating.
     - Subclass 146, carburetors, series.
     - Subclass 148, carburetors, heater.
     - Subclass 149, carburetors, heater, air.
     - Subclass 150, carburetors, oil-feed.
     - Subclass 150.1, carburetors, oil-feed, multiple-supply.
     - Subclass 150.2, carburetors, oil-feed, multiple-jet.
     - Subclass 150.3, carburetors, oil-feed, multiple-jet, progressive.
     - Subclass 151, carburetors, oil-feed, float-valves.
     - Subclass 152, carburetors, oil-feed, pump.
     - Subclass 153, carburetors, oil-feed, rotary.
     - Subclass 154, carburetors, oil-feed, spray.
     - Subclass 154.1, carburetors, oil-feed, suction-controlled valve.
     - Subclass 155, carburetors, atomizers.
     - Subclass 155.1, carburetors, atomizers, constant-level.
     - Subclass 155.2, carburetors, atomizers, constant-level, automatic-dilution.
     - Subclass 156, carburetors, capillary.
     - Subclass 157, carburetors, capillary, spiral-passage.
     - Subclass 158, carburetors, capillary, vertical-screen.
     - Subclass 159, carburetors, capillary, zigzag-passage.
     - Subclass 160, carburetors, gravity.
     - Subclass 163, carburetors, osmotic.
     - Subclass 164, carburetors, pivoted.
     - Subclass 165, carburetors, pivoted, revolving.
     - Subclass 166, carburetors, submerged-blast.
     - Subclass 167, carburetors, submerged-blast, coil.
     - Subclass 168, carburetors, surface.
     - Subclass 169, carburetors, surface, float.
     - Subclass 219, processes, carbureting.
   - Class 123, internal-combustion engines—
     - Subclass 119, charge-forming devices.
     - Subclass 121, charge-forming devices, combined oil and gas.
     - Subclass 131, charge-forming devices, atomizers.
     - Subclass 132, charge-forming devices, atomizers, constant-level.
2. *Subclasses searched or examined:*
   - Class 60, miscellaneous heat-engine plants—
     - Subclasses 4, 28, 36, and 37 (searched).
   - Class 67, illuminating burners.
     - Various subclasses examined.
   - Class 103, pumps—
     - Subclasses 67, 78, 79, and 84 (searched).
   - Class 115, marine propulsion—
     - Subclass 13 (searched).
   - Class 122, liquid heaters and vaporizers—
     - Subclass 24 (searched).
   - Class 123, internal-combustion engines—
     - Subclasses 3, 4, 7 to 18, 20, 21, 22, 25 to 29, 34 to 59, 62 to 69, 71, 73, 75, 76, 78, 79, 82, 92, 97 to 106, 108, 110 to 118, 122 to 130, 133 to 142, 180, and 191 (all except a few searched)—

2. *Subclasses searched or examined*—Continued.
Class 126, stoves and furnaces—
Subclasses 249 and 251 (searched).
Class 158, liquid and gaseous fuel burners—
Subclasses 86 and 73 (searched).
Class 160, steam and vacuum pumps—
All three subclasses examined.
Class 162, injectors and ejectors—
All three subclasses examined.
Class 230, air and gas pumps—
Subclass 13 (searched).
Class 236, dampers, automatic—
All subclasses examined.
Class 257, heat exchange—
Subclass 52 (searched).
Class 261, gas and liquid contact apparatus—
All subclasses searched.

B. Lists of United States Patents Obtained and Examined.

LIST No. 1.

Patents in the Subclasses Ordered Complete, Arranged According to Classes and Subclasses, and Giving Number, Date, Inventor's Name, and Title of Each Patent Belonging in Each of the Several Subclasses, and the Numbers Only of Patents Assigned as Cross-Reference Patents to Each Subclass.

CLASS 123, INTERNAL-COMBUSTION ENGINES.

SUBCLASS 119, CHARGE-FORMING DEVICES.

302,478. July 22, 1884. Gaume. Gas engine.
396,925. Oct. 21, 1884. Hopkins. Gas engine.
345,596. July 13, 1886. Lenoir. Gas engine.
367,937. Aug. 9, 1887. Shaw. Combined gas and oil engine.
407,998. July 30, 1889. Deboutteville & Malandin. Apparatus for carbureting air.
430,235. June 17, 1890. Ritchey. Preparation of gas for gas engines.
517,077. Mar. 27, 1894. Thayer. Gas engine.
566,268. Aug. 18, 1896. Wolf. Gas or petroleum engine or motor.
632,509. Sept. 5, 1899. Ayres. Carbureting device for gas or explosive engines.
638,655. Dec. 5, 1899. Taylor. Coupling gas motors and gas producers.
644,922. Mar. 6, 1900. Johnson & Gillooly. Carbureter.
657,662. Sept. 11, 1900. La Roche. Controlling means for explosive engines.
663,549. Dec. 11, 1900. Mathieu. Carburetor.
673,123. Apr. 30, 1901. Henderson. Carburetor.
*680,115. Aug. 6, 1901. Blomstrom. Vaporizer for internal-combustion engines.
*688,349. Dec. 10, 1901. Scott & Bonney. Vaporizing device for explosive engines.
696,909. Apr. 1, 1902. McCormick & Miller. Carbureting device for explosive engines.
784,699. Mar. 14, 1905. Pederson & Anderson. Feed valve for gasoline engines.
789,321. May 9, 1905. Gerdes. Means for regulating the air feed to gas motors.
*806,434. Dec. 5, 1905. Schebler. Carburetor for hydrocarbon motors.
*806,822. Dec. 12, 1905. Millard. Carburetor.
868,834. Oct. 22, 1907. Bassford. Explosive engine.
881,803. Mar. 10, 1908. Jaubert. Propulsion of submarine boats.
*897,259. Aug. 25, 1908. Winton & Anderson. Method of carbureting air for explosive engines.
924,926. June 15, 1909. Parker. Muffler for mixers.
930,596. Aug. 10, 1909. Hanks. Carburetor jacket or casing.

971,971. Oct. 4, 1910. Cassedy & Purser. Charge-forming device for internal-combustion engines.
978,118. Oct. 18, 1910. Stockton. Gas engine.
1,006,809. Oct. 24, 1911. Ulrich & Rahr. Carburetor for internal-combustion engines.
1,018,447. Feb. 27, 1912. Schenck. Valve mechanism.
1,021,079. Mar. 26, 1912. Stewart. Mixing attachment for carburetors.
1,022,027. Apr. 2, 1912. Hyde & Gage. Hydrocarbon engine.
1,037,953. Sept. 10, 1912. Michener. Internal-combustion engine.
1,051,690. Jan. 28, 1913. Colwell. Internal-combustion engine.
1,075,051. Sept. 9, 1913. Kendall. Controlling device for internal-combustion engines.
1,096,001. May 19, 1914. Freschal & Freschal. Motor fuel-supplying apparatus.
1,098,164. May 26, 1914. Mooney. Auxiliary gas generator for engines.
1,105,592. July 28, 1914. Bassford. Explosive engine.
*1,105,687. Aug. 4, 1914. Ottawa. Carburetor.
*1,112,257. Sept. 29, 1914. Brush. Mixture-supplying apparatus for internal-combustion engines.
1,121,137. Dec. 15, 1914. Schoonmaker. Internal-combustion engine.
1,123,114. Dec. 29, 1914. Diehl. Means for moistening the air used in explosion engines.
1,128,830. Feb. 16, 1915. Wharton. Economizer for internal-combustion engines.
1,138,581. May 4, 1915. Shumaker. Charge-forming device for internal-combustion engines.
1,150,562. Aug. 17, 1915. Vose. Electrically-controlled vaporizer for internal-combustion engines.
1,152,080. Aug. 31, 1915. Denney & Osborn. Air-supplying attachment for carburetors.
1,170,788. Feb. 8, 1916. Walch. Mixing device.

Cross reference patents, class 123, subclass 119.

240,994	497,046	602,820	673,188	855,191	965,632	1,120,828
275,238	505,767	623,190	692,071	857,980	1,013,955	1,158,179
286,030	552,312	623,861	745,055	868,281	1,030,388	
370,258	563,548	627,359	747,190	883,240	1,038,300	
376,638	564,155	632,888	775,859	895,222	1,054,205	
385,121	564,769	633,014	790,325	913,121	1,066,391	
421,474	592,794	657,140	806,125	926,756	1,099,445	
450,091	593,034	660,482	812,860	946,737	1,109,192	

SUBCLASS 121, CHARGE FORMING DEVICES, COMBINED OIL AND GAS.

*574,183. Dec. 29, 1896. Underwood. Mixer for gas engines.
*658,594. Sept. 25, 1900. Shartle & Miller. Gas engine.
*679,053. July 23, 1901. Johnston. Vaporizer for explosive engines.
*792,894. June 20, 1905. Green. Oil or gasoline attachment for gas engines.
974,255. Nov. 1, 1910. Galusha. Power plant.
1,112,188. Sept. 29, 1914. Atwood. Compound induction valve for internal-combustion engines.

Cross-reference patents, class 123, subclass 121.

550,675	555,373	585,115	613,757	645,044	753,510	1,021,079
403,367	555,717	587,627	632,859	679,389	909,558	

SUBCLASS 181, CHARGE FORM DEVICES, ATOMIZERS.

*695,060. Mar. 11, 1902. Krastin. Vaporizer for hydrocarbon engines.
855,191. May 28, 1907. Low. Hydrocarbon motor.
*856,638. June 11, 1907. Higgins, jr., Carburetor.
857,566. June 18, 1907. Franchetti. Atomizing spray nozzle.
*858,586. July 2, 1907. Duryea. Means for supplying explosive vapors for operating rock drills.

883,981. Apr. 7, 1908. Shanck. Gas generator for explosive engines.
886,513. May 5, 1908. Johnston. Fuel spray for internal-combustion motors.
924,044. June 8, 1909. Durr. Apparatus for injecting fuel into internal-combustion motors.
960,057. May 31, 1910. Turnbull, jr. Means for feeding fluid fuel.
*1,003,019. Sept. 12, 1911. Webb. Gas engine.
1,027,054. May 21, 1912. Leflaive. Atomizer for fluid-fuel motors.
1,028,713. June 4, 1912. Grinewezki. Carbureter for internal-combustion motors.
1,069,341. Aug. 5, 1913. Lemp. Pulverizer for oil engines.
1,094,075. Apr. 21, 1914. Kiser. Fuel atomizer.
1,112,877. Oct. 6, 1914. Wigelius. Fuel injector.
1,112,878. Oct. 6, 1914. Wigelius. Fuel injector.
1,117,845. Nov. 17, 1914. Hesselman. Vaporizer for internal-combustion engines.
1,122,770. Dec. 29, 1914. Lake. Fuel injector for internal-combustion engines.
1,130,229. Mar. 2, 1915. Wigelius. Fuel sprayer.
1,135,418. Apr. 13, 1915. Wigelius. Gas motors.
1,142,623. June 8, 1915. Regenbogen. Fuel injector.
1,149,322. Aug. 10, 1915. Baker. Method of and apparatus for feeding liquid fuel to internal-combustion engines.
1,155,266. Sept. 28, 1915. Pasel. Fuel-injecting device.
1,157,273. Oct. 19, 1915. Windeler. Fuel injector.
1,157,305. Oct. 19, 1915. Frost. Pulverizer for oil engines.
1,157,315. Oct. 19, 1915. Lemp. Fuel injector.
1,163,059. Dec. 7, 1915. Bell. Carbureting device.
1,164,064. Dec. 14, 1915. Brown. Fuel injector.
1,171,787. Feb. 15, 1916. Harris. Atomizer for internal-combustion engines.
1,184,779. May 30, 1916. Shaw. Aerating fuel pump for explosive motors.
1,182,120. May 9, 1916. Verhey. Internal-combustion engine.
1,189,338. July 4, 1916. Askew. Internal-combustion engine.

Cross-reference patents, class 123, subclass 131.

153,952	500,477	609,831	745,573	876,287	930,483	1,096,585
225,778	504,723	612,258	765,880	904,455	943,684	1,099,995
228,547	507,989	617,530	800,996	904,503	948,977	1,101,271
238,757	542,410	637,299	807,835	904,855	966,581	1,121,137
302,045	552,718	659,911	816,549	908,112	982,825	1,142,440
309,835	562,307	690,436	863,516	918,607	989,026	1,143,258
350,200	574,614	703,769	867,605	922,145	1,021,079	1,150,562
350,769	582,073	706.494	872,419	922,383	1,060,053	1,161,095
386,029	583,982	730,084	873,392	924,926	1,083,111	

SUBCLASS 132, CHARGE FORMING DEVICES, ATOMIZERS, CONSTANT LEVEL.

*595,552. Dec. 14, 1897. Banki & Csonka. Gasoline motor.
*628,568. Apr. 25, 1899. Secor. Explosive engine.
*633,274. Sept. 19, 1899. Riotte. Vaporizer for gas engines.
*657,739. Sept. 11, 1900. Kiltz. Vaporizer for petroleum engines.
*658,267. Sept. 18, 1900. Kennedy. Gasoline engine fuel-oil feeder.
*671,743. Apr. 9, 1901. White. Mixing and vaporizing device for explosive engines.
678,077. July 9, 1901. Webb. Fuel-supply controller for hydrocarbon engines.
*681,382. Aug. 27, 1901. Westman. Feed cup for explosive engines.
*711,902. Oct. 21, 1902. Leppo. Carburetor for explosive engines.
765,880. July 26, 1904. Chamberlin. Means for feeding the induction ports or fuel inlets of internal-combustion engines.
*790,879. May 23, 1905. Mingst. Carburetor for hydrocarbon engines.
*801,539. Oct. 10, 1905. Moreland. Carburetting apparatus and feed therefor for internal-combustion engines.
*805,979. Nov. 28, 1905. Menges. Carburetor.
*817,941. Apr. 17, 1906. Stute. Carburetor.
842,261. Jan. 29, 1907. Smith. Means for controlling the supply of vapor to internal-combustion engines.

* 887,370. May 12, 1908. Winton & Anderson. Carburetor.
* 896,559. Aug. 18, 1908. Longuemare. Air-inlet regulator for carburetors.
* 898,920. Sept. 15, 1908. Pierson. Carburetor.
903,479. Nov. 10, 1908. Kemp. Safety carbureting plant.
* 906,980. Dec. 15, 1908. Winton & Anderson. Carburetor.
933,888. Sept. 14, 1909. Charter. Float-controlled oil-supply device for gas engines.
1,047,595. Dec. 17, 1912. Twigg. Speed-regulating carburetor.
1,072,402. Sept. 2, 1913. Peregrine. Gas generator for explosive engines.
* 1,106,802. Aug. 11, 1914. Goldberg. Carburetor.
1,166,560. Jan. 4, 1916. Tice. Carburetor.

Cross-reference patents, class 123, subclass 132.

477,295	664,200	747,264	823,742	855,582	931,389	1,117,641
542,043	677,283	771,492	832,183	865,522	948,612	1,117,642
549,939	686,092	791,501	832,532	872,836	952,826	
554,699	686,101	796,712	839,707	886,527	958,897	
557,496	690,610	806,434	844,900	897,259	961,152	
605,815	696,146	806,460	846,471	907,953	975,706	
622,891	733,625	810,435	849,538	920,231	1,025,814	
627,857	740,571	822,172	851,759	928,939	1,063,866	

CLASS 48, GAS, HEATING AND ILLUMINATION.

SUBCLASS 144, CARBURETORS.

49,526. Aug. 22, 1865. Irwin. Improved apparatus for carbureting air.
55,949. June 26, 1866. ———. Improved apparatus for carbureting air.
80,918. Aug. 11, 1868. Coons. Improved carburetor.
94,360. Aug. 31, 1869. Tirrill. Carburetor.
103,836. June 7, 1870. Boyle. Improvement in pneumatic gas machines.
105,561. July 19, 1870. Foster & Ganster. Improvement in gas apparatus for railroads, etc.
107,263. Sept. 13, 1870. Hyde. Improvement in blowpipes.
115,798. June 6, 1871. Whitney. Improvement in apparatus for carbureting gas and air.
130,004. July 30, 1872. Averell. Improvement in carburetors.
134,240. Dec. 24, 1872. Averell. Improvement in carburetors.
137,307. Apr. 1, 1873. Kromschroeder. Improvement in carburetors.
151,896. June 9, 1874. McFaddin. Improvement in apparatus for carbureting air and gas.
153,872. Aug. 4, 1874. Wheeler. Improvement in carbureting apparatus.
169,658. Nov. 9, 1875. Randolph. Improvement in apparatus for lighting railway cars.
181,544. Aug. 29, 1876. Tirrill. Improvement in carburetors.
257,247. May 2, 1882. Shaler. Carburetor.
268,878. Dec. 12, 1882. Tessie du Motay & Ster. Process and apparatus for distributing liquid fuel in cities.
342,445. May 25, 1886. Lawrence. Carburetors.
478,549. July 12, 1892. Bailey. Fuel-gas apparatus.
494,442. Mar. 28, 1893. Ruthven. Carbureting apparatus.
527,789. Oct. 23, 1894. Heckert & Rowland. Process and apparatus for making gas.
560,388. May 19, 1896. Barker. Apparatus for carbureting air.
650,367. May 29, 1900. Bouchaud-Praceiq. Apparatus for carbureting air and transporting liquids.
687,756. Dec. 3, 1901. Kemp. Carburetor.
698,273. Feb. 11, 1902. Jervis. Carburetor.
716,452. Dec. 23, 1902. Mainwaring. Carburetor.
760,296. May 17, 1904. Anderson & Erickson. Gasoline gas-making machine.
818,397. Apr. 17, 1906. Tresenreuter. Carburetor.
895,717. Aug. 11, 1908. Boltenstern. Gas machine.
908,402. Dec. 29, 1908. Fox. High-pressure lighting and heating apparatus.
923,377. June 1, 1909. Schmidt. Carburetor.
933,064. Sept. 7, 1909. Dennie. Carbureted-air apparatus.
940,916. Nov. 23, 1909. Alldredge. Supply tank and carburetor for gas plants.

*1,008,155. Nov. 7, 1911. Iber. Attachment for internal-combustion engines.
1,023,397. Apr. 16, 1912. Rogers. Attachment for carburetors.
1,076,401. Oct. 21, 1913. Armstrong. Gas generator.
*1,098,783. June 2, 1914. Daimler. Carburetor.
*1,105,003. July 28, 1914. Secor. Carburetor.
*1,123,876. Jan. 5, 1915. Hiddleson. Carburetor.
1,152,298. Ag. 31, 1915. Cornelius. Charge-forming device.
1,161,243. Nov. 23, 1915. Oliver. Gravity valve.
*1,179,664. Apr. 18, 1916. Shakespeare & Schmidt. Carburetors.
9,037 Re. Jan. 6, 1880. Randolph. Apparatus for lighting railway cars.

Cross-reference patents, class 48, subclass 144.

156,172	284,373	554,207	951,590	1,024,501	1,082,865	1,111,620
168,910	489,762	932,478	995,882	1,043,691		

SUBCLASS 145, CARBURETORS, REGULATING.

24,199. May 31, 1859. Covel. Carburetors.
27,190. Feb. 14, 1860. Laubach. Vapor burner.
34,557. Mar. 4, 1862. Bassett. Carburetor.
38,357. Apr. 28, 1863. Gwynn. Carburetor.
42,469. Apr. 26, 1864. Griffin. Improved apparatus for vaporizing hydrocarbon liquids for illuminating.
64,776. May 14, 1867. Laubach. Improved apparatus for carbureting gas.
65,705. June 11, 1867. Stevens. Improved apparatus for treating air and hydrocarbon vapor for illuminating gas.
66,067. June 25, 1867. Bassett. Apparatus for carbureting and regulating the flow of gas.
66,545. July 9, 1867. Wood. Apparatus for carbureting air and regulating its flow.
67,216. July 30, 1867. Ransom. Carbureting apparatus.
67,576. Aug. 6, 1867. Pease. Improved apparatus for carbureting air.
67,840. Aug. 20, 1867. Beacher. Improved valve for gas generators.
71,514. Nov. 26, 1867. MacDougall. Portable gas apparatus and carburetor.
72,825. Dec. 31, 1867. Earseman & Gray. Carbureting coal gas.
83,147. Oct. 20, 1868. Frank. Improved machine for carbureting air.
103,994. June 7, 1870. Dailey. Carburetor.
104,642. ———.
115,182. May 23, 1871. Edmonds. Improvement in apparatus for carbureting.
125,194. Apr. 2, 1872. Holton. Improvement in carburetors.
141,886. Aug. 19, 1873. Olney. Gas apparatus for railway cars.
149,111. Mar. 1, 1874. Fish. Apparatus for carbureting gas and air.
150,827. May 12, 1874. Cayce. Improvement in carburetors.
153,533. July 28, 1874. Cohen. Carbureting gas machine.
164,825. June 22, 1875. Fish. Apparatus for carbureting and purifying gas and air.
170,097. Nov. 16, 1875. McKissock. Improvement in carburetors.
170,788. Dec. 7, 1875. Vasquez. Improvement in gas-generating apparatus.
204,974. June 18, 1878. Hyams. Apparatus for carbureting air.
224,576. Feb. 17, 1880. Boeklen. Illumination of railroad cars.
226,122. Mar. 30, 1880. Smyers. Carbureting apparatus.
238,818. Mar. 15, 1881. Walmsley. Carburetor.
311,858. Feb. 3, 1885. Strong. Gas machine.
353,499. Nov. 30, 1886. Plass. Apparatus for lighting and heating railway cars, etc.
385,485. July 3, 1888. Stubbers. Carburetor.
554,630. Feb. 11, 1896. Vestal & Ray. Gas generator.
563,799. July 14, 1896. Porter. Carburetor.
596,658. Jan. 4, 1898. Feil. Apparatus for producing uniform mixtures of air and inflammable vapor.
622,489. Apr. 4, 1899. Kelly. Carburetor.
623,321. Apr. 18, 1899. Lara. Carburetor.
639,965. Dec. 26, 1899. Doze. Carburetor.
673,542. May 7, 1901. Johnson. Apparatus for making gas.
759,539. May 10, 1904. Merrege. Carburetor.

763,965. July 5, 1904. Colbath. Carburetor.
767,485. Aug. 16, 1904. Merrege. Carburetor.
768,732. Aug. 30, 1904. Bruce. Carburetor.
793,776. July 4, 1905. Fallin. Carburetor.
828,284. Aug. 7, 1906. Glasscoe. Carburetor.
841,779. Jan. 22, 1907. Hinman & Wellman. Gas apparatus.
842,846. Jan. 29, 1907. Carburetor air apparatus.
843,554. Feb. 5, 1907. Schrader. Carburetor.
848,963. Apr. 2, 1907. Busenbenz. Gas-manufacturing apparatus.
852,685. May 7, 1907. Speer. Carbureting apparatus.
854,604. May 21, 1907. Reichenbach. Carburetor.
860,334. July 16, 1907. Schell. Carburetor.
883,171. Mar. 31, 1908. Colbath. Carburetor.
941,398. Nov. 30, 1909. Warmsley. Carburetor.
944,482. Dec. 28, 1909. Elliott. Carburetor.
947,639. Jan. 25, 1910. Hill & Westwood. Carburetor.
947,717. Jan. 25, 1910. Mieville. Apparatus for the production of carbureted air.
949,140. Feb. 15, 1910. Becker. Automatic carbureting machine.
953,606. Mar. 29, 1910. Grandjean. Carbureting apparatus.
959,350. May 24, 1910. Johnson. Carbureting apparatus.
959,745. May 31, 1910. Hulse. Regulator for gas-lighting systems.
976,781. Nov. 22, 1910. Busch. Apparatus for producing carbureted air.
1,022,451. Apr. 9, 1912. Whitacre. Carburetor.
1,024,501(?). Apr. 30, 1912. Dixon. Lighting apparatus.
1,064,278. June 10, 1913. Wortman. Carbureting apparatus.
1,080,471. Dec. 2, 1913. Olsen. Air-gas apparatus.
1,082,070. Dec. 23, 1913. Cox. Air-gas apparatus.
1,089,471. Mar. 10, 1914. Hunt & Peloubet. Carbuetor.
1,109,085. Sept. 1, 1914. Schmidt. Carbureting apparatus.
1,116,325. Nov. 3, 1914. Ponarouse. Carburetor.
Re. 2357. Sept. 18, 1866. Bassett.
Re. 5465. ———.

Cross-reference patents, class 48, subclass 145.

35,144	57,940	97,748	440,486	672,507	951,590	1,027,456
43,264	59,991	102,784	500,772	688,408	962,860	1,050,322
49,934	68,666	103,036	581,780	725,148	975,038	1,070,394
50,076	81,282	151,892	596,321	760,296	976,885	1,108,081
50,987	82,244	221,680	607,888	818,796	979,761	
52,876	82,786	224,592	607,889	839,540	982,490	
53,504	84,332	262,991	618,108	855,094	1,017,572	
57,164	84,941	395,616	658,020	950,825	1,027,340	

SUBCLASS 146, CARBURETORS, SERIES.

47,258. Apr. 11, 1865. Simmons & Irwin. Improved apparatus for carbureting air.
54,132. Apr. 24, 1866. Drake. Improvement in apparatus for carbureting air.
82,359. Sept. 22, 1868. Slatter. Improved carburetor.
92,317. July 6, 1869. Kelley. Improved gas generator.
112,111. Feb. 28, 1871. Bell. Improvement in apparatus for carbureting air.
113,317. Apr. 4, 1871. Lutewitte. Improvement in apparatus for carbureting air and gas.
120,590. Nov. 7, 1871. Lowden. Improvement in portable gas apparatus.
193,407. July 24, 1877. Hill. Apparatus for manufacturing illuminating gas.
211,194. Jan. 7, 1879. Tackeberry. Apparatus for carbureting air.
221,942. Nov. 25, 1879. Savage. Improvement in vapor-gas apparatus.
307,182. Oct. 28, 1884. Mayer. Apparatus for manufacturing gas.
324,177. Aug. 11, 1885. Singer. Carburetor.
356,477. Jan. 25, 1887. Johnston. Process and apparatus for manufacturing heating gas.
370,936. Oct. 4, 1887. Drake. Carbureting apparatus.
405,747. June 25, 1889. Snyder & Stephenson. Apparatus for carbureting air or gas.
457,808. Aug. 18, 1891. Vanorman. Carburetor.

484,721. Oct. 18, 1892. Parris. Carbureting apparatus.
501,778. July 18, 1893. Fontaine. Apparatus for carbureting air.
518,582. Apr. 24, 1894. Bidelman. Apparatus for the manufacture of gas.
654,686. July 31, 1900. Steele. Carburetor.
659,476. Oct. 9, 1900. Hodder. Carburetor.
673,365. Apr. 30, 1901. Hopkins. Carburetor.
647,812. May 31, 1901. McCormick. Carburetor.
690,681. Jan. 7, 1902. Van Der Made. Apparatus for carbureting air.
692,255. Feb. 4, 1902. Doolan. Carburetor.
702,637. June 17, 1902. Deringer. Carburetor.
707,897. Aug. 26, 1902. Betzel. Carburetor.
714,117. Nov. 18, 1902. Steele. Gas-making apparatus.
716,227. Dec. 16, 1902. Harvey. Carburetor.
785,011. July 28, 1903. Avery & Smith. Apparatus for carbureting air.
774,435. Nov. 8, 1904. Marshall. Apparatus for carbureting air.
836,795. Nov. 27, 1906. Wright. Carburetor.
844,995. Feb. 17, 1907. Colbath. Carburetor.
1,014,133. Jan. 9, 1912. Ducker. Carburetor.
1,075,598. Oct. 14, 1913. Myers. Carburetor for household and other uses.
1,170,510. Feb. 8, 1916. Carpenter. Gas scrubber.
1,171,183. Feb. 8, 1916. Duckham. Vertical retort.
*1,177,538. Mar. 28, 1916. Roberts. Carburetor.
Re. 3,924. Apr. 19, 1870. Kelly. Gas generator.
Re. 4,890. May 7, 1872. Bell. Improvement in apparatus for carbureting air.
Re. 11,430. July 10, 1894. Vanorman. Carburetor.

Cross-reference patents, class 48, subclass 146.

217,800	356,476	488,489	576,499	780,355	942,863	962,860

Subclass 148, carburetors, heater.

50,251. Oct. 3, 1865. Irwin. Improved apparatus for carbureting air.
55,395. June 5, 1866. Tirrill. Improved gas apparatus.
63,215. Mar. 26, 1867. Clarke. Improved apparatus for carbureting air, etc.
63,511. Apr. 2, 1867. Hall. Improved apparatus for carbureting gas and air.
66,777. July 16, 1867. Barker & Gilbert. Improved apparatus for carbureting air and gas.
93,267. Aug. 3, 1869. Barker & Gilbert. Improved apparatus for carbureting air.
93,268. Aug. 3, 1869. Barker & Gilbert. Improved apparatus for carbureting air.
94,982. Sept. 21, 1869. Spang & Scheaf. Improved gas machine.
117,998. Aug. 15, 1871. Edgerton. Improvement in methods and apparatus for separating certain hydrocarbon vapors from illuminating gases.
127,031. May 21, 1872. Dayton. Improvement in apparatus for carbureting air.
174,851. Mar. 14, 1876. Porter & Grimes. Improvement in carburetors.
175,827. Apr. 11, 1876. Deeds. Improvement in air-gas machines.
176,955. May 2, 1876. Haymaker. Improvement in carbureting gas apparatus.
176,349. Feb. 26, 1876. Porter & Grimes. Carburetors.
180,638. Aug. 1, 1876. Randall & Boomer. Improvement in apparatus for automatically regulating the temperature of carburetors.
184,049. Nov. 7, 1876. Ofeldt. Improvement in automatic heat regulators for gas machines.
211,808. Jan. 14, 1879. Pierce. Improvement in thermostats for carburetors.
221,680. Nov. 18, 1879. Jones. Improvement in air-carbureting apparatus for railroad cars.
288,622. Nov. 20, 1883. Copeland. Carburetor.
360,533. Apr. 5, 1887. Langdon. Apparatus for making gas.
411,809. Oct. 1, 1889. Hamlin. Gas enricher.
422,322. Feb. 25, 1890. Strouse. Carburetor.
427,197. May 6, 1890. Shannon. Carburetor.
500,772. July 4, 1893. Marcus. Carbureting apparatus.
522,418. July 3, 1894. Iles. Carburetor.
566,418. Aug. 25, 1896. Schrader. Carburetor.

613,167. October 25, 1898. Martenette. Carburetor.
*638,529. Dec. 5, 1899. Vanduzen. Vaporizer for explosive engines.
643,306. Feb. 13, 1900. Rey. Carburetor.
658,020. Sept. 18, 1900. Rey. Carburetor.
661,660. Nov. 13, 1900. Griebel. Carburetor.
*665,496. Jan. 8, 1901. Worth. Carburetor.
*694,110. Feb. 25, 1902. Sanson. Carburetor for explosive engines.
*696,231. Mar. 25, 1902. Fillet. Carbureting device for explosion engines.
*705,021. July 22, 1902. Bennett & Moorwood. Carburetor.
720,336. Feb. 10, 1903. Ede. Vaporizer for gasoline engines.
*733,625. July 14, 1903. Clement. Carburetor for motor bicycles.
*746,119. Dec. 8, 1903. Longuemare et al. Carburetor for explosive motors.
749,768. Jan. 19, 1904. Wilson. Apparatus for producing carbureted air.
*762,707. June 14, 1904. Grove. Carburetor for internal-combustion engines.
772,678. Oct. 18, 1904. Roebuck & McMillan. Carburetor.
*778,988. Jan. 3, 1905. Merritt. Carburetor.
*781,936. Feb. 7, 1905. Cook. Carburetor for hydrocarbon engines.
784,599. Mar. 14, 1905. Studabaker. Carburetor.
*799,232. Sept. 12, 1905. Gossé. Carburetor.
*800,777. Oct. 3, 1905. Westmacott. Carburetor and vaporizer for explosion engines.
842,170. Jan. 29, 1907. Bryant & Watling. Carburetor.
846,680. Mar. 12, 1907. Mason & Sinclair. Gas machine.
857,064. June 18, 1907. Holgate. Carbureting lamp.
894,389. July 28, 1908. Louis. Carburetor for explosion engines.
904,203. Nov. 17, 1908. Hertzberg & Low. Fuel heater for explosive engines.
906,548. Dec. 15, 1908. McCarthy. Carburetor.
909,896. Jan. 19, 1909. Hertzberg & Low. Electric vaporizer for internal-combustion engines.
920,721. May 4, 1909. Bradley. Grass burner for railway tracks.
*954,905. Apr. 12, 1910. Wolf. Carburetor.
957,786. May 10, 1910. Low, Wohl & Hertzberg. Vaporizing device.
962,860. June 28, 1910. Sanders. Carburetor.
*964,657. July 19, 1910. Lamb. Vaporizer for hydrocarbon engines.
990,249. Apr. 25, 1911. Garcia & Hertzberg. Starting vaporizer for explosive engines.
1,011,641. Dec. 12, 1911. Paterson. Carburetor.
*1,013,988. Jan. 9, 1912. Blom. Carburetor.
*1,014,945. Jan. 16, 1912. Brockhurst. Means for feeding and mixing fluids.
*1,043,842. Nov. 5, 1912. Musgrave. Carburetors for gas engines.
*1,061,626. May 13, 1913. Mowbray. Carburetor.
*1,065,640. June 24, 1913. Thompson. Fuel-vaporizing device.
*1,065,948. July 1, 1913. Lion. Carburetor.
*1,072,875. Sept. 9, 1913. Sammons. Carburetor mechanism.
1,091,784. Mar. 31, 1914. Weber. Carburetor.
1,095,555. May 5, 1914. Crone. Mixing unit for fluids.
*1,099,086. June 2, 1914. Hamilton. Carburetor.
1,102,309. July 7, 1914. Whiting. Heater for gaseous fuel.
1,102,478. July 7, 1914. Crowder. Gaseous-fuel heater.
1,107,489. Aug. 18, 1914. Bunn & Robinson. Carburetor.
1,107,967. Aug. 18, 1914. Knaak. Heater for internal-combustion engines.
1,109,025. Sept. 1, 1914. Taylor. Fuel heater.
1,114,200. Oct. 20, 1914. Stewart. Throttle for carburetors.
1,117,414. Nov. 17, 1914. Manning. Fuel heater.
*1,118,126. Nov. 24, 1914. Harroun. Carburetor.
1,120,352. Dec. 8, 1914. Wolf. Carburetor.
*1,122,703. Dec. 29, 1914. Dull. Carburetor.
1,128,998. Feb. 16, 1915. Mulvaney. Heater for gaseous fuel.
1,129,794. Feb. 23, 1915. Cummings. Carburetor.
*1,130,502. Mar. 2, 1915. Francisco. Carburetor.
*1,133,452. Mar. 30, 1915. Babbitt & Beaumont. Carburetor.
*1,133,527. Mar. 30, 1915. Bennett. Carburetor.
1,134,366. Apr. 6, 1915. Barnes. Carburetor.
1,136,675. Apr. 20, 1915. Hutchinson. Carburetor.
1,137,219. Apr. 27, 1915. Leake. Heater and attachment for motors.
1,140,064. May 18, 1915. Rakestraw. Carburetor.
1,141,570. June 1, 1915. McCornack. Carburetor.

1,142,824. June 15, 1915. Lund. Carburetor attachment.
1,148,247. July 27, 1915. Moore. Carburetor.
1,150,115. Aug. 17, 1915. Heinze. Carburetor.
1,150,619. Aug. 17, 1915. Percival & Patterson. Kerosene carburetor.
1,155,726. Oct. 5, 1915. Harroun. Carburetor.
1,156,836. Oct. 12, 1915. Diener. Carburetor.
1,158,494. Nov. 2, 1915. Harroun. Carburetor.
*1,159,933. Nov. 9, 1915. Grove. Carburetor.
1,160,585. Nov. 16, 1915. Edison. Fuel-supplying means.
*1,166,173. Dec. 28, 1915. Blays. Carburetor.
*1,167,457. Jan. 11, 1916. Wickersham. Carburetor.
*1,169,340. Jan. 25, 1916. Meara. Carburetor.
1,169,573. Jan. 25, 1916. Schultz. Vaporizer.
*1,172,397. Feb. 22, 1916. Schulz. Carburetor.
1,173,469. Feb. 29, 1916. White. Carburetor.
*1,176,816. Mar. 28, 1916. Hampton de Fontaine. Kerosene carburetor.
*1,177,940. Apr. 4, 1916. Ford. Carburetor.
*1,178,530. Apr. 11, 1916. Lytle, Klawiter, Kritch. Carburetor.
*1,182,714. May 9, 1916. Schmidt. Carburetor.
1,189,797. July 4, 1916. Deppé. Heater and mixer for internal-combustion engines.
1,187,375. June 13, 1916. O'Connor. Carburetor.

Cross-reference patents, class 48, subclass 148.

9,967	162,848	356,950	622,489	777,908	1,016,741	1,124,724
12,535	163,323	360,240	629,581	837,984	1,017,750	1,126,218
13,010	167,170	367,936	639,336	842,846	1,023,402	1,143,092
57,788	168,048	376,248	640,695	843,554	1,036,812	1,149,291
57,812	168,290	377,607	659,987	890,970	1,046,344	1,152,134
62,856	206,196	405,747	671,042	892,726	1,049,417	1,160,837
64,382	206,402	427,225	678,365	894,656	1,056,760	1,160,897
80,404	213,351	435,856	674,812	949,140	1,079,338	1,163,223
80,918	221,942	464,779	680,961	957,731	1,079,947	1,168,782
90,445	307,132	563,541	688,408	959,745	1,095,402	Re. 1,819
94,898	308,796	564,429	692,255	978,602	1,105,371	Re. 6,865
97,748	309,467	568,672	714,117	976,885	1,106,935	Re. 10,858
109,568	320,460	590,893	715,398	979,409	1,117,354	
127,031	348,917	620,586	716,227	994,574	1,119,479	
141,968	353,499	622,008	737,738	1,004,329	1,124,706	

SUBCLASS 149, CARBURETORS, HEATER, AIR.

26,070. Nov. 8, 1859. Kitchen. Apparatus for heating hydrocarbon liquids.
47,257. Apr. 11, 1865. Irwin. Improved process for carbureting air.
53,482. Mar. 27, 1866. Pond & Richardson. Improved gas apparatus.
57,639. Aug. 28, 1866. Rowley, Sloane et al. Improved apparatus for carbureting air.
66,622. July 9, 1867. Pedrick. Improvement in carbureting air.
76,880. Apr. 21, 1868. Barker. Improvement in apparatus for carbureting air.
79,667. July 7, 1868. Marshall. Improved air carburetor.
96,073. Oct. 26, 1869. Barbarin Improved machine for carbureting atmospheric air.
97,288. Nov. 30, 1869. Dunderdale. Improved apparatus for carbureting air.
110,946. Jan. 10, 1871. Works & Daniels. Improvement in apparatus and processes for generating and burning vapor fuel.
140,105. June 17, 1873. Wilkinson. Improvement in carburetors.
155,974. Oct. 13, 1874. Rand. Improvement in carburetors.
167,170. Aug. 31, 1875. Harrington. Improvement in carburetors.
187,415. Feb. 13, 1877. Rand. Improvement in apparatus for carbureting air.
198,150. Dec. 11, 1877. Porter. Improvement in plastic jacket and condenser for carburetors.
220,685. Oct. 14, 1879. Weart. Improvement in carbureting apparatus.
311,498. Feb. 8, 1885. James. Apparatus for generating gas.
403,839. May 21, 1889. Harvey. Furnace and apparatus for producing and burning gaseous vapors.
*531,779. Jan. 1, 1895. Cook. Carburetor.

633,320. Sept. 19, 1899. Inman. Carburetor.
672,854. Apr. 23, 1901. Goldsmith. Carburetor.
*685,993. Nov. 5, 1901. Le Blom. Carburetor for explosive engines.
689,460. Dec. 24, 1901. Clark & Cothran. Carburetor.
*741,810. Oct. 20, 1903. Mohler. Constant-level liquid-hydrocarbon vaporizer for oil engines.
768,801. Aug. 30, 1904. Hooker. Carburetor.
831,374. Sept. 18, 1906. Perrier. Apparatus for the production of carbureted air.
906,276. Dec. 8, 1908. Peregrine. Apparatus for carbureting air.
*1,017,572. Feb. 13, 1912. Lund. Attachment for carburetors.
1,065,819. June 24, 1913. Lion. Device for carbureting air.
1,066,295. July 1, 1913. Lion. Device for carbureting air.
1,091,521. Mar. 31, 1914. Lund. Temperature controller for carburetors.
1,113,892. Oct. 13, 1914. Feller. Carburetor.
1,132,199. Mar. 16, 1915. McKeen. Air heater for carburetors.
1,139,081. May 11, 1915. Stone. Fuel economizer for internal-combustion engines.
1,141,450. June 1, 1915. Erickson. Device for supplying heated air to carburetors.
*1,145,476. July 6, 1915. Fulton. Carburetor.
Re. 2,455. Jan. 15, 1867. Pond & Richardson. Improved gas apparatus.

Cross-reference patents, class 48, subclass 149.

52,087	175,827	435,856	723,487	1,004,829	1,070,449	1,132,420
90,436	221,942	478,549	742,920	1,011,641	1,072,875	1,158,494
100,080	254,243	505,700	911,967	1,013,988	1,107,967	
127,031	309,467	500,893	921,934	1,046,344	1,109,025	
162,848	370,936	673,365	951,501	1,064,106	1,120,128	
166,602	427,225	714,117	961,481	1,064,866	1,125,339	

SUBCLASS 150, CARBURETORS, OIL FEED.

58,422. Oct. 2, 1866. Hutchinson. Improved automatic feed for carburetors.
68,231. Aug. 27, 1867. Peacock. Improved carbureting apparatus.
81,590. Sept. 1, 1868. Brin. Approved apparatus for carbureting air and applying the same.
97,748. Dec. 7, 1869. Springer. Improved gas machine.
108,005. Oct. 4, 1869. Chapin. Improvement in apparatus for carbureting air and gas.
111,175. Jan. 24, 1871. Chapin. Improvement in apparatus for carbureting air.
190,714. May 15, 1877. Enggren. Improvement in gas carburetors.
198,353. Dec. 18, 1877. Chollar. Improvement in automatic feed regulators for carburetors.
212,502. Feb. 18, 1879. Reed. Improvement in feed regulators for carburetors.
230,744. Aug. 3, 1880. Chace. Gas governor and regulator for carburetors.
253,718. Feb. 14, 1882. Jackson. Oil-distributing mechanism for carburetors.
443,214. Dec. 23, 1890. Addicks. Heater for hydrocarbon liquids.
568,944. Oct. 6, 1896. Griffen. Device for charging hydrocarbon-gas generators.
679,018. July 23, 1901. Fischer. Oil feed for carburetors.
772,791. Oct. 18, 1904. Dow. Carburetor.
*792,670. June 20, 1905. Shain. Vaporizer or carburetor for gas engines.
810,087. Jan. 16, 1906. Sanders. Carburetor.
817,592. Apr. 10, 1906. Shiess. Carburetor.
820,554. May 15, 1906. Colbath. Carburetor.
834,029. Oct. 23, 1906. Smith. Carburetor.
835,745. Nov. 13, 1906. Bouchaud-Praceiq. Automatic apparatus for carbureting air and other gases.
855,407. May 28, 1907. Loewenstein. Carburetor.
866,587. Sept. 17, 1907. Johnson. Gas machine.
876,678. Jan. 14, 1908. Andres. Carburetor.
*894,225. July 28, 1908. O'Neill. Explosive engine.

912,468. Feb. 16, 1909. Grandjean. Oil feed for carbureting apparatus.
913,857. Mar. 2, 1909. Steward. Carburetor.
929,135. July 27, 1909. Osgrig. Carburetor.
934,366. Sept. 14, 1909. Steel. Means for supplying oil to carburetors.
951,779. Mar. 8, 1910. French. Carburetor.
975,156. Nov. 8, 1910. Pléplu. Carburetor.
984,032. Feb. 14, 1911. Seager. Carburetor.
1,063,081. May 27, 1913. Thiem. Apparatus for the production of air gas.
*1,110,131. Sept. 8, 1914. Green. Automatic regulator of carburetors.
*1,133,872. Mar. 30, 1915. Maness. Gas-engine attachment.
*1,137,135. Apr. 27, 1915. Hart. Carburetor.
*1,163,398. Dec. 7, 1915. Corbett. Carburetor.
Re. 6,070. Jan. 24, 1871. Chapin. Improvement in carburetors.

Cross-reference patents, class 48, subclass 150.

93,267	320,460	763,074	783,790	923,377	944,482	979,761
114,358	333,508	775,859	794,938	932,478	948,744	1,002,791
135,806	589,094	777,390	818,207	949,140	962,860	1,046,653
169,034	592,579	782,788	818,397	953,606	964,165	1,089,471
211,194	753,790	782,980	823,382	940,916	976,781	1,137,219
219,158						

SUBCLASS 150.1, CARBURETORS, OIL FEED, MULTIPLE SUPPLY.

683,125. Sept. 24, 1901. Laurent & Clerget. Vaporizing device for explosive engines.
*684,662. Oct. 15, 1901. Ahara. Feeder for explosive engines.
*756,879. Apr. 12, 1904. McCadden. Carburetor for internal-combustion engines.
*771,492. Oct. 4, 1904. Parmenter. Carburetor for explosive engines.
798,150. Aug. 29, 1905. Wolgamott. Carburetor for gas engines.
*811,618. Feb. 6, 1906. Claudel. Carburetor for hydrocarbon engines.
*871,288. Nov. 19, 1907. Merwin. Gas-saturating device.
*877,890. Jan. 28, 1908. Gerber & Welland. Vaporizer.
*907,953. Dec. 29, 1908. Baverey. Carburetor for explosion motors.
923,093. May 25, 1909. Wegner. Gasoline engine.
943,684. Dec. 21, 1909. Johnston. Vaporizer for internal-combustion engines.
977,066. Nov. 29, 1910. Blow. Carburetor.
982,826. Jan. 31, 1911. Johnston. Mixing valve for internal-combustion engines.
983,994. Feb. 14, 1911. Harrington. Carburetor.
*1,003,351. Sept. 12, 1911. Fulton. Carburetor.
*1,013,759. Jan. 2, 1912. Freidag. Internal-combustion engine.
*1,021,326. Mar. 26, 1912. Mowbray. Hydrocarbon vaporizer for internal-combustion engines.
1,029,740. June 18, 1912. Beck. Carbureting apparatus for explosive engines.
1,033,780. Sept. 17, 1912. Moore & Browne. Engine.
1,043,080. Nov. 5, 1912. Duis. Moisture-supplying device for carbureted air.
1,048,620. Dec. 31, 1912. Williams. Carburetor.
*1 055,084. Mar. 4, 1913. Rumely. Carburetor.
*1,062,333. May 20, 1913. Higgins. Carburetor.
*1,069,399. Aug. 5, 1913. Eckre. Carburetor.
*1,077,910. Nov. 4, 1913. Higgins. Carburetor.
*1,084,151. Jan. 13, 1914. Ireland. Carburetor.
*1,085,239. Jan. 27, 1914. Bischop. Bifuel carburetor.
*1,095,384. May 5, 1914. Collett. Carburetor.
*1,095,622. May 5, 1914. Bruun. Carburetor.
*1,099,277. June 9, 1914. Baverey. Carburetor.
*1,099,547. June 9, 1914. Gentle. Carburetor.
*1,101,147. June 23, 1914. Sawyer. Admission valve.
*1,102,722. July 7, 1914. Cobb. Carburetor.
*1,104,762. July 28, 1914. Ahlberg. Carburetor.
*1,108,181. Aug. 25, 1914. Kane. Carburetor.
*1,111,224. Sept. 22, 1914. Hamilton. Carburetor.
*1,112,641. Oct. 6, 1914. Moeller. Fluid mixing and regulating device.

1,120,602. Dec. 8, 1914. Corser. Carburetor.
*1,121,651. Dec. 22, 1914. Mohler & Fry. Carbureting apparatus.
*1,124,724. Jan. 12, 1915. Gentle. Carburetor.
*1,132,580. Mar. 23, 1915. Hazen. Carburetor.
*1,137,135. Apr. 27, 1915. Hart. Carburetor.
*1,138,829. May 11, 1915. Ahlberg. Carburetor.
*1,141,258. June 1, 1915. Noyes. Liquid feeder for burners, etc.
*1,142,793. June 15, 1915. Baker. Carburetor.
*1,143,961. June 22, 1915. Haynes. Carburetor.
*1,145,990. July 15, 1915. Higgins. Carburetor.
*1,150,202. Aug. 17, 1915. Johnston & Longenecker. Carburetor.
*1,150,224. Aug. 17, 1915. Podlesak. Internal-combustion engines.
*1,152,134. Aug. 31, 1915. Webb. Carburetor.
*1,153,436. Sept. 14, 1915. McCray. Carburetor.
*1,154,630. Sept. 28, 1915. Higgins. Carburetor.
*1,155,407. Oct. 5, 1915. Dougan. Carburetor.
*1,157,116. Oct. 19, 1915. Maing & Pellegrini. Carburetor.
*1,160,239. Nov. 16, 1915. Bates. Carburetor.
*1,163,398. Dec. 7, 1915. Corbett. Carburetor.
*1,166,734. Jan. 4, 1916. Anderson. Carburetor.
*1,166,967. Jan. 4, 1916. Burger. Fuel-feed mechanism for internal-combustion engines.
*1,168,788. Jan. 18, 1916. Bucker. Carburetor.
*1,171,200. Feb. 8, 1916. Holley. Carburetor.
*1,172,263. Feb. 22, 1916. Fontaine. Carburetor for kerosene and the like.
*1,176,600. Mar. 21, 1916. Radloff. Carburetor.
*1,177,538. Mar. 28, 1916. Roberts. Carburetor.
*1,179,278. Apr. 11, 1916. Carithers. Carburetor.
*1,183,221. May 16, 1916. Miller & Adamson. Carburetor.
*1,183,293. May 16, 1916. Gilles. Carburetor.

Cross-reference patents, class 48, subclass 150.1.

439,813	672,500	812,860	944,811	983,307	1,098,164	1,140,064
575,720	698,895	817,721	961,152	995,530	1,109,025	1,148,893
581,930	706,050	830,144	964,409	1,018,983	1,110,482	1,156,836
593,911	726,671	852,272	976,237	1,022,027	1,111,897	Re. 12,322
625,887	778,988	867,797	979,667	1,065,948	1,116,192	
632,859	801,390	878,706	979,787	1,072,875	1,128,998	
668,953	807,391	906,783	980,946	1,077,414	1,133,527	

SUBCLASS 150.2, CARBURETORS, OIL FEED, MULTIPLE JET.

498,673. May 30, 1893. Mulvey. Apparatus for carbureting air.
*616,974. Jan. 3, 1899. Riotte. Gas engine.
716,573. Dec. 23, 1902. Nelk. Carburetor for explosive engines.
*726,986. May 5, 1903. Peteler. Carburetor for gas engine.
*751,292. Feb. 2, 1904. Johanson. Mixer for gasoline engines.
*792,878. June 20, 1905. Brasier. Carburetor.
*823,485. June 12, 1906. Steinbrenner & Mayer. Carburetor for explosive engines.
*867,859. Oct. 8, 1907. Weinat & Bogey. Carburetor.
*871,134. Nov. 19, 1907. Monnier & Morin. Carburetor.
*891,322. June 23, 1908. Brennan. Carburetor for explosive engines.
*894,656. July 28, 1908. Johnston. Carburetor for internal-combustion engines.
*952,547. Mar. 22, 1910. Schwartz. Carburetor.
*973,602. Oct. 25, 1910. Williams. Carburetor.
*977,813. Dec. 6, 1910. Marrder. Carburetor.
*979,008. Dec. 27, 1910. Willet. Carburetor.
985,256. Feb. 28, 1911. Friedenwald. Carburetor.
*986,700. Mar. 14, 1911. Fogel. Carburetor.
*995,074. June 13, 1911. McCarthy. Priming attachment for carburetors.
*995,919. June 20, 1911. Smith. Carburetor.
*997,929. July 11, 1911. Meyer. Carburetor.
*1,117,283. Nov. 17, 1914. Barker. Carburetor.

*1,118,805. Nov. 24, 1914. Reichenbach. Carburetor.
*1,143,092. June 15, 1915. Unckles. Carburetor.
*1,143,779. June 22, 1915. Pembroke. Carburetor.
*1,147,644. July 20, 1915. Reichenbach. Carbureting device.
*1,151,989. Aug. 31, 1915. Balassa. Carburetor.
*1,158,435. Nov. 2, 1915. Bourne. Carburetor.
*1,160,837. Nov. 16, 1915. Burnham. Carburetor.
*1,167,217. Jan. 4, 1916. Reichenbach. Carburetor.
*1,176,267. Mar. 21, 1916. Baverey. Carburetor.
*1,179,701. Apr. 18, 1916. Costa. Carburetor.
*1,180,152. Apr. 18, 1916. Howes. Carburetor.
*1,184,695. May 23, 1916. Costa. Carburetor.
*1,186,797. June 13, 1916. Kingston. Carburetor.

Cross-reference patents, class 48, subclass 150.2.

504,723	696,146	842,261	938,894	1,118,126	1,165,656	1,169,573
568,017	741,810	852,272	1,106,253	1,134,366	1,168,782	

SUBCLASS 150.3, CARBURETORS, OIL FEED, MULTIPLE JET, PROGRESSIVE.

*664,134. Dec. 18, 1900. Dougill. Internal-combustion engine.
*674,034. May 14, 1901. Krastin. Speed governor for explosive engines.
*755,074. Mar. 22, 1904. Sturtevant. Double carburetors for explosive engines.
*759,624. May 10, 1904. MacMulkin. Vaporizer for hydrocarbon engines.
*818,853. Apr. 24, 1906. Renault. Carburetor.
*832,183. Oct. 2, 1906. Duryea & Remington. Carburetor.
*832,184. Oct. 2, 1906. Duryea & Remington. Carburetor.
*851,759. Apr. 30, 1907. Kunkel. Carburetor.
*858,437. July 2, 1907. Brooke. Carburetor.
*871,320. Nov. 19, 1907. Bollée. Carburetor.
*871,741. Nov. 19, 1907. Sturtevant. Double carburetor for explosive engines.
*879,380. Feb. 18, 1908. Greuter. Multiple carburetor.
*881,416. Mar. 10, 1908. Krebs. Carburetor.
*881,800. Mar. 10, 1908. Horstman. Carburetor for internal-combustion engines.
*891,219. June 16, 1908. Menns. Carburetor.
*892,499. July 7, 1908. Broderick. Carburetor.
*895,709. Aug. 11, 1908. Abernethy. Carburetor for hydrocarbon engines.
*898,494. Sept. 15, 1908. Mooers. Carburetor.
*898,495. Sept. 15, 1908. Mooers. Carburetor.
*900,604. Oct. 6, 1908. Small. Carburetor.
*901,345. Oct. 20, 1908. Howell. Carburetor.
*907,757. Dec. 29, 1908. Duryea. Carburetor.
*910,018. Jan. 19, 1909. Prestwich. Carburetor for internal-combustion engines.
*920,979. May 11, 1909. Morehouse. Carburetor.
*927,211. July 6, 1909. Bennett. Carburetor.
*928,121. July 13, 1909. Goldberg. Carburetor.
*932,465. Aug. 31, 1909. Haas. Carburetor.
*941,424. Nov. 30, 1909. Leonard. Carburetor.
*948,612. Feb. 8, 1910. Krause. Carburetor for combustion engines.
*954,785. Apr. 12, 1910. Craven. Carburetor.
*958,476. May 17, 1910. Cook. Carburetor.
*961,481. June 14, 1910. Carter. Carburetor.
*970,558. Sept. 20, 1910. Ryan. Carburetor.
*973,262. Oct. 18, 1910. Daniel. Carburetor.
*976,258. Nov. 22, 1910. Gallagher. Carburetor.
*977,044. Nov. 29, 1910. Rebourg. Carburetor.
*979,700. Dec. 27, 1910. Proehl. Carburetor.
*982,297. Jan. 24, 1911. Perce. Carburetor.
*982,428. Jan. 24, 1911. Huggins & Parker. Carburetor.
*989,307. Apr. 11, 1911. Simmons. Carburetor.
*989,515. Apr. 11, 1911. Sprung & Rose. Carburetor.
*993,770. May 30, 1911. Fritz. Carburetor.

*998,128. July 18, 1911. Scaife. Carburetor.
*1,001,950. Aug. 29, 1911. Hart. Carburetor.
*1,002,699. Sept. 5, 1911. Jouffret & Renée. Carburetor.
*1,002,700. Sept. 5, 1911. Jouffret & Renée. Carburetor.
*1,006,130. Oct. 17, 1911. Riotte. Vaporizer.
*1,006,387. Oct. 17, 1911. Kreis. Carburetor.
*1,006,411. Oct. 17, 1911. Scott. Carburetor.
*1,010,051. Nov. 28, 1911. Hoffman. Carburetor.
*1,010,066. Nov. 28, 1911. Newcomb. Carburetor.
*1,010,116. Nov. 28, 1911. Carter. Carburetor.
*1,011,694. Dec. 12, 1911. Winton. Carburetor.
*1,011,696. Dec. 12, 1911. Winton. Carburetor.
*1,011,960. Dec. 19, 1911. Ionides. Carburetor.
*1,014,551. Jan. 9, 1912. Winton. Carburetor.
*1,016,108. Jan. 30, 1912. Steinbrenner. Carburetor.
*1,018,262. Feb. 20, 1912. Neal. Carburetor for internal-combustion engines.
*1,021,547. Mar. 26, 1912. Motsinger. Carburetor.
*1,022,702. Apr. 9, 1912. Rothe. Carburetor.
1,022,708. Apr. 9, 1912. Rothe. Carburetor.
*1,037,993. Sept. 10, 1912. Romans. Carburetor.
*1,038,040. Sept. 10, 1912. Weiss. Carburetor.
*1,040,414. Oct. 8, 1912. Rettig. Carburetor.
*1,040,619. Oct. 8, 1912. Carter. Carburetor.
*1,041,481. Oct. 15, 1912. Kaley. Carburetor.
*1,046,014. Dec. 3, 1912. Ratcliff. Carburetor.
*1,046,434. Dec. 10, 1912. Bolée. Carburetor.
*1,048,518. Dec. 31, 1912. Fritz. Priming device for carburetors.
*1,049,705. Jan. 7, 1913. Greuter. Carburetor.
*1,051,041. Jan. 21, 1913. White. Carburetor.
*1,061,835. May 13, 1913. Gobbi. Carburetor.
*1,063,148. May 27, 1913. Anderson. Carburetor.
*1,065,912. June 24, 1913. Binon. Carburetor.
*1,065,977. July 1, 1913. Smith. Carburetor.
*1,069,817. Aug. 12, 1913. Schultz. Carburetor.
*1,072,783. Sept. 9, 1913. Kaltenbach. Carburetor.
*1073,179. Sept. 16, 1913. Sprung. Carburetor.
*1,074,574. Sept. 30, 1913. Riotte. Carburetor.
*1,074,575. Sept. 30, 1913. Riotte. Carburetor.
*1,074,577. Sept. 30, 1913. Smith. Carburetor.
*1,078,349. Nov. 11, 1913. Hawzhurst & Nicolai. Carbureting device.
*1,078,582. Nov. 11, 1913. Jaugey. Carburetor.
1,079,634. Nov. 25, 1913. Burchartz. Carburetor.
*1,080,118. Dec. 2, 1913. Monosmith. Carburetor.
*1,080,815. Dec. 9, 1913. Everest. Carberetor for internal-combustion engines.
*1,088,091. Feb. 24, 1914. Raymond. Carburetor.
*1,089,089. Mar. 3, 1914. Stamps. Carburetor.
*1,089,105. Mar. 3, 1914. Bessom & Anderson. Carburetor.
*1,089,372. Mar. 3, 1914. Baverey. Carburetor for internal-combustion engines.
*1,089,524. Mar. 10, 1914. Barrett & Wilson. Carburetor.
*1,090,047. Mar. 10, 1914. Goudard & Mennesson. Carburetor.
*1,090,208. Mar. 17, 1914. Heitger. Carburetor.
*1,093,343. Apr. 14, 1914. McAndrews. Carburetor.
*1,094,674. Apr. 28, 1914. Miller & Adamson. Carburetor.
*1,099,293. June 9, 1914. Goldberg & Tillotson. Carburetor.
1,099,828. June 9, 1914. Tatom. Carburetor.
*1,100,679. June 16, 1914. McGuire. Carburetor.
*1,101,869. June 30, 1914. McGuire. Carburetor.
*1,103,930. July 21, 1914. Bennett. Carburetor.
*1,104,560. July 21, 1914. Shoobridge & Gunstone. Carburetor.
1,106,192. Aug. 4, 1914. Crouan. Carburetor.
*1,108,245. Aug. 25, 1914. Schebler. Carburetor.
*1,109,974. Sept. 8, 1914. Fagard. Carburetor for internal-combustion engines.
*1,112,374. Sept. 29, 1914. Livingston. Carburetor.
*1-,113,221. Oct. 13, 1914. Krause Carburetor.

*1,113,551. Oct. 13, 1914. Greuter. Carburetor.
1,115,632. Nov. 3, 1914. Weiss. Device for regulating supplemental supply of fuel mixtures and air to internal-combustion engines.
*1,116,023. Nov. 3, 1914. Crawford. Carburetor.
*1,119,076. Dec. 1, 1914. Frey. Carburetor.
*1,120,183. Dec. 8, 1914. Duff. Carburetor.
*1,120,184. Dec. 8, 1914. Duff. Carburetor.
*1,120,185. Dec. 8, 1914. Duff. Carburetor.
*1,122,571. Dec. 29, 1914. Binks. Carburetor.
*1,123,469. Jan. 5, 1915. Bennett. Carburetor.
*1,124,697. Jan. 12, 1915. Carter. Needle-valve operating mechanism for carburetors.
*1,125,069. Jan. 19, 1915. Coulter. Carburetor.
*1,125,368. Jan. 19, 1915. Monosmith. Carburetor.
*1,128,773. Feb. 16, 1915. Goldberg. Carburetor.
*1,130,350. Mar. 2, 1915. Thompson. Carburetor.
*1,130,474. Mar. 2, 1915. Brush. Carburetor.
*1,130,490. Mar. 2, 1915. Delaunay-Belleville. Carburetor.
*1,130,700. Mar. 9, 1915. Bennett. Carburetor.
*1,130,950. Mar. 9, 1915. Williams. Carburetor.
*1,133,904. Mar. 30, 1915. Wyman. Carburetor.
*1,134,942. Apr. 6, 1915. Bessom & Anderson. Carburetor.
*1,135,211. Apr. 13, 1915. Schiedeknecht. Carburetor.
*1,143,986. June 22, 1915. Muir. Carburetor.
*1,144,206. June 22, 1915. Juhász. Carburetor.
*1,145,824. July 6, 1915. Udale. Carburetor.
*1,146,150. July 13, 1915. Gardner. Visible carburetor.
*1,147,337. July 20, 1915. Muir. Carburetor.
*1,147,940. July 27, 1915. Griffin. Carburetor.
*1,148,378. July 27, 1915. Grapin. Carburetor.
*1,148,485. July 27, 1915. Gallagher. Carburetor.
*1,149,291. Aug. 10, 1915. Richard. Carburetor.
*1,151,778. Aug. 31, 1915. Funderburk. Carburetor.
*1,152,031. Aug. 31, 1915. Lobdell. Carburetor.
*1,152,173. Aug. 31, 1915. Haugele. Carburetor.
*1,153,487. Sept. 14, 1915. Greiner. Carburetor.
*1,155,457. Oct. 5, 1915. Wetterhahn. Carburetor.
*1,156,084. Oct. 12, 1915. Kimmell. Carburetor.
*1,157,146. Oct. 19, 1915. Carrel. Pressure carburetor.
*1,158,589. Nov. 2, 1915. Thurot. Carburetor.
*1,159,167. Nov. 2, 1915. Breeze. Carburetor.
*1,159,851. Nov. 9, 1915. McCurdy. Carburetor.
*1,162,041. Nov. 30, 1915. Cunningham. Carburetor.
*1,162,308. Nov. 30, 1915. Pond. Carburetor.
*1,162,680. Nov. 30, 1915. Buick. Carburetor.
*1,163,223. Dec. 7, 1915. Deppé. Carburetor.
*1,164,661. Dec. 21, 1915. Muir. Carburetor.
*1,126,159. Jan. 26, 1915. Dressel. Floatless carburretor.
*1,166,308. Dec. 28, 1915. Arquembourg. Carburetor.
*1,168,513. Jan. 18, 1916. Kingston. Carburetor.
*1,169,616. Jan. 25, 1916. Carter. Carburetor.
*1,170,348. Feb. 1, 1916. Schüttler. Starting and idle-running device for jet carburetors.
*1,170,416. Feb. 1, 1916. Claudel. Carburetor.
*1,170,417. Feb. 1, 1916. Claudel. Carburetor.
*1,171,074. Feb. 8, 1916. Stroud. Carburetor.
*1,172,031. Feb. 15, 1916. Morand. Carburetor.
*1,172,701. Feb. 22, 1916. Gardner. Carburetor.
*1,173,246. Feb. 29, 1916. Boettcher. Carburetor.
*1,175,536. Mar. 14, 1916. Longuemare. Carburetor.
*1,176,516. Mar. 21, 1916. Boyce. Carburetor.
*1,176,627. Mar. 21, 1916. Ver Planck. Carburetor.
*1,176,651. Mar. 21, 1916. Chatain. Carburetor.
*1,177,624. Apr. 4, 1916. Hill. Carburetor.
*1,178,832. Apr. 11, 1916. Augustine. Fluid-mixing device.
*1,179,881. Apr. 11, 1916. Sunderman. Carburetor.

*1,180,483. Apr. 25, 1916. Fogolin. Carburetor.
*1,180,518. Apr. 25, 1916. Malstrom & Andersen. Carburetor.
*1,180,976. Apr. 25, 1916. Cloudsley. Carburetor.
*1,181,128. May 2, 1916. Fritz. Automatic priming device for carburetors.
*1,183,019. May 16, 1916. McGuire. Carburetor.
*1,183,081. May 16, 1916. Krueger. Carburetor.
*1,183,183. May 16, 1916. Funderburk. Combined dash adjustment and primer for carburetors.
*1,183,222. May 16, 1916. Miller. Carburetor.
*1,183,294. May 16, 1916. Gilles. Carburetor.
*1,183,587. May 16, 1916. Parkin. Carburetor.
*1,183,673. May 16, 1916. Robertson. Carburetor.
*1,184,267. May 23, 1916. Smith. Carburetor.
*1,184,923. May 30, 1916. Carter. Carburetor.
*1,185,016. May 30, 1916. Spiller. Carburetor.
*1,185,492. May 30, 1916. Finch. Carburetor.
*1,190,573. July 11, 1916. Nedoma. Carburetor.
*Re. 12,611. Feb. 19, 1907. Sturtevant. Double carburetor for explosive engines.
*Re. 13,580. June 24, 1913. Fritz. Priming device for carburetors.
*1,186,371. June 6, 1916. Baverey. Carburetor.
*1,187,463. June 13, 1916. Merriam. Carburetor.
*1,188,390. June 27, 1916. Baverey. Carburetor.
*Re. 14,045. Jan. 11, 1916. Heftler. Carburetor.

Cross-reference patents, class 48, subclass 150.3.

710,841	961,423	1,055,352	1,098,164	1,116,673	1,120,763	1,158,494
842,261	991,152	1,069,502	1,107,849	1,119,078	1,145,138	1,177,318
844,894	1,038,921	1,096,482	1,115,951			

SUBCLASS 151, CARBURETORS, OIL FEED, FLOAT VALVES.

45,729. Jan. 3, 1865. McDougall. Improved apparatus for carbureting gases.
55,324. June 5, 1866. McDougall. Improved apparatus for carbureting air.
57,551. Aug. 28, 1866. Myer. Improved apparatus for generating illuminating gas.
59,142. Oct. 23, 1866. Smith. Feeder for carburetors.
80,268. July 28, 1868. Boon & Perry. Improved apparatus for carbureting gas and air.
107,853. Oct. 4, 1868. Bartlett. Improvement in gas carburetors.
127,039. May 21, 1872. Fish. Improvement in carburetors.
131,815. Oct. 1, 1872. Drake. Improvement in apparatus for carbureting air and gas.
140,998. July 22, 1873. Fischer. Improvement in carburetors.
154,475. Aug. 25, 1874. Grimes. Improvement in gas-carbureting machines.
156,142. Oct. 20, 1874. Dillon. Improvement in gas machines for carbureting air.
156,463. Nov. 3, 1874. Marks. Improvement in carburetors.
158,184 Dec. 29, 1874. Porter. Improvement in apparatus for carbureting air and gas.
160,690. Mar. 2, 1875. Lockwood. Improvement in carburetors.
162,848. May 4, 1875. Ofeldt. Improvement in gas apparatus for carbureting air.
164,360. June 15, 1875. Bean. Improvement in carburetors.
166,476. Aug. 10, 1875. Porter. Improvement in gas carburetors.
168,043. Sept. 21, 1876. Porter & Grimes. Improvement in air and gas carburetors.
176,156. Apr. 18, 1876. Wiggin. Improvement in carburetors.
176,156. Apr. 18, 1876. Wiggin. Improvement in carburetors.
177,104. May 9, 1876. Deeds. Improvement in carburetors.
186,302. Jan. 16, 1877. Boomer & Randall. Improvement in gas and air carburetors.
189,645. Apr. 17, 1877. Palmer. Improvement in carburetors.
193,282. July 17, 1877. Drake. Improvement in carburetors.
193,911. Aug. 7, 1877. Bangs. Improvement in carburetors.
198,657. Dec. 25, 1877. Merritt. Improvement in regulated valves for carburetors.

199,055. Jan. 8, 1878. Gray. Improvement in feed regulators for carburetors.
199,781. Jan. 29, 1878. Bradley. Improvement in carburetors.
199,928. Feb. 5, 1878. Nelon. Improvement in carbureting apparatus.
206,196. July 23, 1878. Porter. Carburetor.
207,886. Sept. 10, 1878. Miner. Improvement in carburetors.
213,351. Mar. 18, 1879. Roth. Improvement in carburetors.
222,822. Dec. 23, 1879. Howard. Improvement in gas carburetors.
226,875. Apr. 27, 1880. Palmer. Gas carburetor.
233,978. Nov. 2, 1880. Burrows. Carbureting apparatus.
248,750. Oct. 25, 1881. Hughes. Gas carburetor.
280,746. July 3, 1881. Jackson. Metrical carburetor.
288,868. Nov. 20, 1883. Sanderson. Carburetor.
291,676. Jan. 8, 1884. Burrows. Apparatus for carbureting air.
301,790. July 8, 1884. Bagger. Carburetor.
303,927. Aug. 19, 1884. Froh. Carburetor.
308,886. Dec. 9, 1884. English. Apparatus for carbureting air or gases.
312,289. Feb. 17, 1885. Palmer. Air or gas carburetor.
317,636. May 12, 1885. Symons. Gas carburetor.
336,378. Feb. 16, 1886. Bennett. Automatic gas generator.
340,221. Apr. 20, 1886. Lawrence. Carburetor.
353,311. Nov. 30, 1886. Keller. Carburetor.
390,037. Sept. 25, 1888. Ruckle & Wolters. Carburetor.
395,152. Dec. 25, 1888. Lawrence. Carburetor.
403,877. May 14, 1889. Rogers & Wharry. Carburetor for gas engines.
427,225. May 6, 1890. Cooper. Carburetor.
528,882. Nov. 6, 1894. Keller. Carburetor.
575,901. Jan. 26, 1897. McKnight. Gasolene-gas machine.
583,126. May 25, 1897. Ryder. Carburetor.
583,818. June 1, 1897. Redmon. Carburetor.
586,923. July 20, 1897. Aldrich. Apparatus for manufacturing gas.
587,867. Aug. 10, 1897. Shaver. Carburetor.
595,658. Dec. 14, 1897. Seitz. Carburetor.
603,431. May 3, 1898. Pinckney. Carburetor.
607,888. July 26, 1898. Smith. Carburetor.
607,889. July 26, 1898. Smith. Carburetor.
618,108. Jan. 24, 1899. Lamb. Carburetor.
623,725. Apr. 25, 1899. Lange. Carburetor.
626,193. May 30, 1899. Small. Carburetor.
629,246. July 18, 1899. Grau. Carburetor.
639,336. Dec. 19, 1899. Anson. Carburetor.
640,695. Jan. 2, 1900. Parrott. Carburetor.
646,320. Mar. 27, 1900. Selzer. Carburetor.
657,770. Sept. 11, 1900. Hedrick. Carburetor.
663,683. Dec. 11, 1900. Royal. Carburetor.
685,787. Nov. 5, 1901. Myers. Carburetor.
688,776. Dec. 10, 1901. Greenamyer. Carburetor.
688,931. Dec. 17, 1901. Carter & Zierlein. Carburetor.
690,303. Dec. 31, 1901. Legge. Carburetor.
697,507. Apr. 15, 1902. Electrical condenser.
701,890. June 10, 1902. Keller. Carburetor.
706,454. Aug. 5, 1902. Robinson. Carburetor.
706,600. Aug. 12, 1902. Rush. Carburetor.
707,467. Aug. 19, 1902. Walther. Carburetor.
727,161. May 5, 1903. Leckband. Apparatus for carbureting air.
746,173. Dec. 8, 1903. Sayre. Carburetor.
754,774. Mar. 15, 1904. Jas. Carburetor.
828,334. Aug. 14, 1906. Peterson. Carburetor.
832,380. Oct. 2, 1906. Morrison. Carburetor.
844,996. Feb. 19, 1907. Colbath. Carburetor.
871,480. Nov. 19, 1907. Cornish. Carburetor.
885,832. Apr. 28, 1908. Breiding. Carburetor.
886,403. May 5, 1908. Puddington. Carburetor.
931,386. Aug. 17, 1909. Colbath. Carburetor.
954,258. Apr. 5, 1910. Colbath. Automatic valve for carburetors, etc.
Re. 6,865. Jan. 18, 1876. Porter & Grimes. Improvement in air and gas carburetors.

Cross-reference patents, class 48, subclass 151.

50,076	148,602	211,306	350,382	604,948	829,375	989,848
57,788	151,392	234,955	493,165	654,686	844,995	989,980
57,812	166,427	236,159	509,174	720,485	853,196	1,009,121
63,667	174,851	238,757	522,574	742,920	860,334	1,070,894
85,104	176,349	245,443	559,341	763,965	870,052	
103,036	180,061	246,601	568,672	780,673	883,171	
109,568	183,884	262,991	575,901	781,701	886,526	
125,194	198,731	280,747	583,126	783,648	900,731	
135,020	204,974	308,877	593,284	796,557	951,501	

SUBCLASS 152, CARBURETOR, OIL FEED, PUMPS.

169,843. Nov. 9, 1875. Rand. Improvement in carbureting apparatus.
439,579. Sept. 15, 1891. Hargreaves et al. Carburetor.
576,499. Feb. 2, 1897. Ransom. Gas apparatus.
622,003. Mar. 28, 1899. Kemp. Carburetor.
625,294. May 16, 1899. Egan. Carburetor.
646,780. Apr. 3, 1900. Wood. Carburetor.
665,568. Jan. 8, 1901. Kemp. Gas-generating apparatus.
670,599. Mar. 26, 1901. Tenney. Carburetor.
689,004. Dec. 17, 1901. Kemp. Carburetor.
692,518. Feb. 4, 1902. Jacks. Carburetor.
712,803. Nov. 4, 1902. Johnson. Carburetor.
731,137. June 16, 1903. Speer. Carbureting apparatus.
743,439. Nov. 10, 1903. Bower. Carburetor feed.
745,489. Dec. 1, 1903. Goslee. Carburetor.
762,477. June 14, 1904. Garde. Apparatus for carbureting air.
780,855. Jan. 17, 1905. Kelley. Carburetor.
927,558. July 13, 1904. Laux. Carburetor.
*1,119,479. Dec. 1, 1914. Veeder. Carburetor.
*1,149,323. Aug. 10, 1915. Baker & Swan. Apparatus for feeding fuel to oil engines.
*1,153,077. Sept. 7, 1915. Nippel. Carburetor.
1,164,093. Dec. 14, 1915. Houghton & Hall. Carburetor.

Cross-reference patents, class 48, subclass 152.

596,658	673,542	735,011	831,374	959,350	1,043,083	1,150,115
620,595	714,414	767,485	841,779	1,022,451	1,080,471	1,166,595
625,084						

SUBCLASS 153, CARBURETORS, OIL FEED, ROTARY.

49,448. Aug. 15, 1865. Simonds. Improved apparatus for carbureting air.
57,940. Sept. 11, 1866. McAvoy. Improved apparatus for carbureting air.
65,296. May 28, 1867. Stevens. Improved apparatus for carbureting air.
68,666. Sept. 10, 1867. Stevens. Improved combination apparatus for carbureting air.
82,244. Sept. 15, 1868. Plass. Improved apparatus for carbureting air.
85,972. Jan. 19, 1869. Steiner. Improved gas generator.
87,556. Mar. 9, 1869. Foster & Ganster. Improved gas apparatus.
97,122. Nov. 23, 1869. Root & Custer. Improved portable gas apparatus and carburetor.
102,784. May 10, 1870. Doty. Improvement in gas generators.
127,366. May 28, 1872. Pierson. Improvement in carburetors.
133,057. Dec. 17, 1872. Terry. Improvement in carburetors.
138,409. Apr. 29, 1873. Judd & Doty. Improvement in apparatus for carbureting air.
140,711. July 8, 1873. Judd & Pierson. Improvement in carbureting apparatus.
153,876. Aug. 4, 1874. Wilson et al. Improvement in carbureting apparatus.
155,297. Sept. 22, 1874. Denny & Pierson. Improvement in air carburetors.
168,290. Sept. 28, 1875. Schüssler. Improvement in hydrocarbon-gas apparatus.

189,490. Apr. 10, 1877. Paquette. Improvement in carburetors.
193,034. July 10, 1877. Pierson. Improvement in carbureting machines.
206,402. July 30, 1878. Paquelin. Improvement in carbureting apparatus.
*249,363. Nov. 8, 1881. Jackson. Metrical carburetor.
275,268. Apr. 3, 1883. Ransom. Apparatus for carbureting gas.
280,747. July 3, 1883. Jackson. Metrical regulator for distributing hydrocarbon liquid to gas or air.
303,877. Dec. 9, 1884. Copeland. Automatic hydrocarbon-feeding apparatus for carburetors.
309,466. Dec. 16, 1884. Jackson. Bucket for measuring wheels of carburetors.
368,660. Aug. 23, 1887. English & Stubbers. Gas machine.
429,271. June 3, 1890. Hambleton. Apparatus for measuring and carbureting air or gas.
540,536. June 4, 1895. Coleman. Gasoline-gas machine.
564,429. July 21, 1896. Kemp. Air-gas machine.
632,377. Sept. 5, 1899. Stanley. Carburetor.
683,751. Oct. 1, 1901. Guy. Carburetor.
691,955. Jan. 28, 1902. Martenette. Carburetor.
692,860. Feb. 11, 1902. Kemp. Carburetor.
738,604. Sept. 8, 1903. Carrissimo et al. Carbureting apparatus.
795,233. July 18, 1905. Poole. Carbureting machine.
796,719. Aug. 8, 1905. Guy. Oil feed for carburetors.
1,137,536. Apr. 27, 1915. Schmidt. Carbureting apparatus.
Re. 10,358. July 17, 1883. Paquelin. Carbureting apparatus.

Cross-reference patents, class 48, subclass 153.

56,116 59,474 308,796 733,444 743,085 750,311 1,109,085

SUBCLASS 154, CARBURETORS, OIL FEED, SPRAY.

46,976. Mar. 21, 1865. Simonds. Improved apparatus for carbureting air.
48,891. June 27, 1865. Haihsworth. Improved apparatus for carbureting air.
61,033. Jan. 8, 1867. Williams. Improved method of carbureting gas.
274,176. Mar. 20, 1883. Copeland. Carburetor.
316,033. Apr. 21, 1885. Hayes. Apparatus for carbureting and odorizing natural gas.
348,917. Sept. 7, 1886. Kniese. Carburetor to be used in the manufacture of water gas.
404,428. June 4, 1889. Paine. Oil burner.
432,270. July 15, 1890. Hargreaves et al. Carburetor.
534,861. Feb. 26, 1895. Cornish. Carburetor.
550,776. Dec. 3, 1895. Bourgeois. Carburetor.
635,894. Oct. 31, 1899. Kemp. Carburetor.
655,172. July 31, 1900. Olds & Hough. Carburetor.
660,778. Oct. 30, 1900. Lambert. Mixer and vaporizer for gas engines.
662,024. Nov. 20, 1900. Rey. Carburetor.
662,514. Nov. 27, 1900. Wünsche. Carburetor.
709,647. Sept. 23, 1902. Rosenberry. Carburetor.
714,414. Nov. 28, 1902. Tenney. Carburetor.
742,774. Oct. 27, 1903. Chamberlain. Mixer for hydrocarbon engines.
742,920. Nov. 3, 1903. Smith. Carburetor for explosion engines.
754,178. Mar. 8, 1904. Weber. Carburetor.
840,708. Jan. 8, 1907. Parrott. Carburetor.
843,692. Feb. 12, 1907. Norton. Device for generating gas from crude oil.
852,780. May 7, 1907. Ellis. Automatic gasoline-gas machine.
881,431. Mar. 10, 1908. Meyers & Hickey. Apparatus for carbureting air.
906,940. Dec. 15, 1908. Schmitt & Neumann. Gas machine.
*1,115,951. Nov. 3, 1914. Martin. Carburetor.
*1,119,076. Dec. 1, 1914. Frey. Carburetor.
*1,120,128. Dec. 8, 1914. Browne. Carburetor.
*1,120,573. Dec. 8, 1914. Webber. Carburetor.
*1,190,540. July 11, 1916. Gettelman. Carburetor.
Re. 2,785. Oct. 22, 1867. Stuart. Improvement in carbureting gases.

Cross-reference patents, class 48, subclass 154.

83,748	189,645	247,390	405,747	646,780	760,247	1,116,325
148,579	199,781	251,673	427,197	673,542	852,685	
176,156	203,505	288,622	459,579	688,931	931,386	
176,395	206,402	288,868	564,429	712,803	957,731	

SUBCLASS 154.1, CARBURETORS, OIL FEED, SUCTION-CONTROLLED VALVE.

*423,214. Mar. 11, 1890. Butler. Hydrocarbon motor.
*498,447. May 30, 1893. Rolfson. Carburetor.
*500,401. June 27, 1893. Lehmann. Mixing valve for petroleum or other motors.
*509,828. Nov. 20, 1893. Rolfson. Carburetor.
*515,050. Feb. 20, 1894. Hoyt. Carbureting apparatus for gas or vapor engines.
*556,069. Mar. 10, 1896. Sintz. Carburetor.
*567,253. Sept. 8, 1896. Pratt. Vaporizer and mixer for gasoline engines.
*578,683. Mar. 9, 1897. Tregurtha. Vaporizer.
*609,557. Aug. 23, 1898. Phelps. Vaporizer for hydrocarbon oils.
*611,341. Sept. 27, 1898. Starr & Cogswell. Mixer and vaporizer for explosive engines.
*633,800. Sept. 26, 1899. Casgrain. Carburetor for explosive engines.
*649,191. May 8, 1900. Alderson. Carbureting and gas-mixing apparatus.
*670,921. Mar. 26, 1901. Olds. Carburetor.
*679,387. July 30, 1901. Mathieu. Carbureting apparatus for explosion motors.
*680,572. Aug. 13, 1901. Dyer. Vaporizer for explosive engines.
*680,961. Aug. 20, 1901. Buffum. Carburetor for explosive engines.
*688,367. Dec. 10, 1901. Tregurtha. Vaporizer for gasoline engines.
*690,112. Dec. 31, 1901. Kull. Carburetor or mixing valve for explosive engines.
*694,708. Mar. 4, 1902. White. Vaporizer for explosive engines.
*703,987. July 1, 1902. Lizotte. Vaporizer for explosive engines.
*705,995. July 29, 1902. Graves. Carburetor for explosive engines.
*714,982. Dec. 2, 1902. Widmayer et al. Generator or mixing valve.
*715,398. Dec. 9, 1902. Longuemare. Carburetor for explosive engines.
*717,000. Dec. 30, 1902. Henroid. Internal-combustion engine or motor.
*722,357. Mar. 10, 1903. Davis. Carburetor for gas engines.
*724,328. Mar. 31, 1903. Pivert. Mixing valve for explosion engines.
*727,476. May 5, 1903. Starr & Cogswell. Mixer for explosive gasoline engines.
*729,254. May 26, 1903. Bates. Carbureting device for explosive engines.
*730,608. June 9, 1903. Brush. Carbureting device for internal-combustion engines.
*731,218. June 16, 1903. Perkins. Vaporizer for internal-combustion engines.
*732,016. June 23, 1903. Uhlin. Explosive-engine governor.
*741,224. Oct. 13, 1903. Clark. Carburetor for explosive engines.
*741,959. Oct. 20, 1903. Emery. Vaporizer for hydrocarbon engines.
*746,833. Dec. 15, 1903. Hennegin. Fuel regulator for gasoline motors.
*747,235. Dec. 15, 1903. Saris. Carburetor for liquid-fuel engines.
*760,673. May 24, 1904. White & Duryea. Vaporizer for explosive engines.
*761,392. May 31, 1904. Olds. Carburetor for explosive engines.
*791,192. May 30, 1905. Haynes. Carburetor for explosion engines.
*806,079. Nov. 29, 1905. Gavelek. Carburetor for hydrocarbon engines.
*807,479. Dec. 19, 1905. Mason. Carburetor.
*816,477. Mar. 27, 1906. Kellog. Carburetor.
*820,408. May 15, 1906. Carlius. Vaporizing device for internal-combustion engines.
*826,581. July 24, 1906. Briest. Carburetor.
*826,787. July 24, 1906. Kemp. Carburetor.
*839,707. Dec. 25, 1906. Biehen. Carburetor.
*842,429. Jan. 29, 1907. Schuyler. Carburetor for explosion engines.
*848,425. Mar. 26, 1907. Anderson. Carburetor for gasoline engines.
*850,223. Apr. 17, 1907. Hallett. Carburetor.
*863,516. Aug. 13, 1907. Downing. Carburetor.
*866,490. Sept. 17, 1907. Lewis. Carburetor.
*871,730. Nov. 19, 1907. McHardy. Carburetor.

*876,210. Jan. 7, 1908. Miller. Carburetor.
*886,545. May 5, 1908. Schebler. Carburetor.
*888,263. May 19, 1908. Rader. Carburetor.
*890,099. June 9, 1908. Richardson. Carburetor.
*892,155. June 30, 1908. Hodges. Carburetor.
*896,388. Aug. 18, 1908. Johnston. Carburetor.
*903,206. Nov. 10, 1908. Lauson. Mixing valve.
*904,659. Nov. 24, 1908. Thompson. Carburetor.
*909,490. Jan. 12, 1909. Westaway. Carburetor.
*911,967. Feb. 9, 1909. Fox. Carburetor.
*912,998. Feb. 23, 1909. Eckert. Carburetor.
*912,999. Feb. 23, 1909. Eckert. Carburetor.
*913,313. Feb. 23, 1909. Slaughter. Carburetor for explosive motors.
*915,684. Mar. 16, 1909. Leinau. Carburetor.
*917,125. Apr. 6, 1909. Pierce. Carburetor.
*918,607. Apr. 20, 1909. Sturges. Carburetor.
*922,374. May 18, 1909. Wright. Mixer and vaporizer.
*926,848. July 6, 1909. Carlson. Carburetor.
*930,443. Aug. 10, 1909. Vaughan & McKensie. Carburetor.
*936,064. Oct. 5, 1909. Westaway. Carburetor.
*938,894. Nov. 2, 1909. Rapp. Carburetor.
*939,856. Nov. 9, 1909. Papanti. Carburetor.
*941,406 Nov 30, 1909. Cooper. Carburetor.
*944,811. Dec. 28, 1909. Nageborn. Internal-combustion engine.
*946,632. Jan. 18, 1910. Bassford. Carburetor.
*948,977. Feb. 8, 1910. Kingsbury. Carburetor.
*950,423. Feb. 22, 1910. Anderson & Mot. Carburetor.
*951,002. Mar. 1, 1910. Grott. Carburetor.
*952,326. Mar. 18, 1910. Hagar. Carburetor.
*955,222. Apr. 10, 1910. Stocker. Carburetor.
955,358. Apr. 19, 1910. Park. Carburetor.
*955,956. Apr. 26, 1910. Ennis. Carburetor.
*962,649. June 28, 1910. Miller. Carburetor.
*963,804. July 12, 1910. Peterson. Carburetor.
*964,409. July 12, 1910. Eckert. Carburetor.
*964,381. July 19, 1910. Wynn. Carburetor.
*966,381. Aug. 9, 1910. Brooke. Carburetor.
*971,038. Sept. 27, 1910. Gulick. Carburetor.
*971,862. Oct. 4, 1910. Schebler. Carburetor.
*973,832. Oct. 25, 1910. Rothe. Carburetor.
*974,033. Oct. 25, 1910. Daniel. Carburetor.
976,881. Nov. 29, 1910. Ivor. Carburetor.
*976,911. Nov. 29, 1910. Petersen & Pettit. Carburetor.
*978,076. Dec. 6, 1910. Tilden. Carburetor.
*978,787. Dec. 13, 1910. Smith. Carburetor.
*978,947. Dec. 20, 1910. Shaw. Carburetor.
*979,409. Dec 27, 1910. Barker. Carburetor.
*979,555. Dec. 27, 1910. Peterson. Carburetor.
*981,353. Jan. 17, 1911. Halladay. Carburetor.
*984,109. Feb. 14, 1911. Sailer. Carburetor.
*984,874. Feb. 21, 1911. Winton. Carburetor.
986,572. Mar. 14, 1911. Ivor. Carburetor.
*988,502. Apr. 4, 1911. Petre. Carburetor.
*988,659. Apr. 4, 1911. Phinney. Carburetor.
*993,096. May 23, 1911. Noyes. Gas and liquid mixer.
*993,210. May 23, 1911. Weiss. Carburetor.
*994,191. June 6, 1911. Peterson. Carburetor.
*994,195. June 6, 1911. Prescott. Carburetor.
*994,886. June 13, 1911. Swanberg. Generator valve for gasoline engine.
*995,623. June 20, 1911. Miller. Carburetor.
*997,417. July 11, 1911. Rothe. Carburetor.
*998,993. July 25, 1911. Skinner. Carbureting apparatus.
*999,033. July 25, 1911. Hubbard. Motive-fluid-supply valve.
*999,686. Aug. 1, 1911. Westaway. Carburetor.
*1,000,398. Aug. 15, 1911. Gentle. Carburetor.
*1,001,847. Aug. 29, 1911. Hobbs. Carburetor.
*1,003,101. Sept. 12, 1911. Gumz. Carburetor.

*1,004,091. Sept. 26, 1911. Shain. Carburetor for gas engines.
*1,007,659. Oct. 31, 1911. Rice. Carburetor.
*1,009,252. Nov. 21, 1911. Mallo. Carburetor.
*1,010,003. Nov. 28, 1911. Schulz. Carburetor.
*1,010,184. Nov. 28, 1911. Stewart. Carburetor.
*1,010,185. Nov. 28, 1911. Schulz. Carburetor.
*1,014,319. Jan. 9, 1912. Miller. Carburetor.
*1,014,682. Jan. 16, 1912. Weld. Carburetor.
*1,016,169. Jan. 30, 1912. Nagel. Carburetor.
1,019,800. Mar. 12, 1912. Kennedy. Carburetor.
*1,020,270. Mar. 12, 1912. Dunn. Carburetor.
*1,025,816. May 7, 1912. Lofthouse & Booty. Carburetor.
1,027,769. May 28, 1912. Roby. Carburetor.
*1,029,606. June 16, 1912. Guthrie. Valve mechanism for carburetors.
*1,029,897. June 18, 1912. Stewart. Carburetor.
*1,030,348. June 25, 1912. Stamps. Carburetor.
*1,032,307. July 9, 1912. Stewart. Carburetor.
*1,032,547. July 16, 1912. Howarth. Carburetor.
*1,033,130. July 23, 1912. Underwood & Hill. Carburetor.
*1,036,536. Aug. 27, 1912. Atkins. Carburetor or mixer for internal-combustion engines.
*1,040,528. Oct. 8, 1912. Dock. Carburetor.
*1,042,017. Oct. 28, 1912. Long. Carburetor.
*1,044,314. Nov. 12, 1912. Watson. Carburetor.
*1,046,111. Dec. 3, 1912. Schultz. Carburetor.
*1,046,141. Dec. 3, 1912. Becker. Gas-mixing valve for explosive engines.
*1,048,088. Dec. 24, 1912. Lavender. Carbureting device.
*1,048,954. Dec. 31, 1912. George. Carburetor.
*1,049,318. Dec. 31, 1912. Westaway. Carburetor.
*1,049,417. Jan. 7, 1913. Stewart. Carburetor.
*1,049,887. Jan. 7, 1913. Marsh. Carburetor.
*1,050,059. Jan. 7, 1913. Gould. Carburetor.
*1,051,440. Jan. 28, 1913. Ostler. Carburetor.
*1,059,501. Apr. 22, 1913. Stewart. Carburetor.
*1,060,545. Apr. 29, 1913. Gentle. Carburetor.
*1,061,582. May 13, 1913. Clement. Carburetor.
*1,063,030. May 27, 1913. Heidelmann. Carburetor.
*1,064,867. June 17, 1913. Stewart. Carburetor.
*1,066,080. July 1, 1913. Cole. Carburetor.
*1,067,351. July 15, 1913. Lavigne. Carburetor.
*1,067,623. July 15, 1913. Schulz. Carburetor.
*1,069,389. Aug. 5, 1913. Conklin. Carburetor.
*1,071,003. Aug. 19, 1913. Drayton & Woodroffe. Carburetor.
1,074,575. Sept. 30, 1913. Riotte. Carburetor.
*1,077,256. Nov. 4, 1913. Brush. Carburetor.
*1,078,413. Nov. 11, 1913. Cahill. Carburetor.
*1,078,590. Nov. 11, 1913. Muir. Carburetor.
*1,078,591. Nov. 11, 1913. Muir. Carburetor.
*1,078,592. Nov. 11, 1913. Muir. Carburetor.
*1,079,947. Dec. 2, 1913. Morris. Carburetor.
*1,080,696. Dec. 9, 1913. Hugelet. Carburetor.
*1,081,222. Dec. 9, 1913. Dürr. Carburetor.
*1,084,693. Jan. 20, 1914. Cahill. Carburetor.
*1,084,954. Jan. 20, 1914. Nice. Carburetor.
*1,085,194. Jan. 27, 1914. Russian & Noble. Carburetor.
*1,086,359. Feb. 10, 1914. Faries. Carburetor for gas and gasoline engines.
*1,087,187. Feb. 17, 1914. Schultz. Carburetor.
*1,087,218. Feb. 17, 1914. Dalton & Conklin. Carburetor.
1,089,231. Feb. 24, 1914. Lawrence. Carburetor for internal-combustion engines.
*1,092,079. Mar. 31, 1914. Reeder. Carburetor.
*1,095,402. May 5, 1914. Jordan. Carburetor.
*1,097,787. May 26, 1914. Brewer & Jones. Carburetor.
*1,103,864. July 14, 1914. Brown. Carburetor.
*1,104,494. July 21, 1914. Hamill. Carburetor.
*1,111,179. Sept. 22, 1914. Pratt. Carburetor.
*1,112,641. Oct. 6, 1914. Moeller. Fluid mixing and regulating device.
*1,114,222. Oct. 20, 1914. Brigham. Carburetor.

*1,115,951. Nov. 8, 1914. Martin. Carburetor.
*1,120,128. Dec. 8, 1914. Browne. Carburetor.
*1,120,397. Dec. 8, 1914. Martin. Carburetor.
*1,120,578. Dec. 8, 1914. Webber. Carburetor.
*1,123,048. Dec. 29, 1914. Washburn. Carburetor.
*1,124,911. Jan. 12, 1915. Johnston. Valve for gas engine.
*1,125,525. Jan. 19, 1915. Rathcock. Carburetor.
*1,126,159. Jan. 26, 1915. Dressel. Floatless carburetor.
*1,126,249. Jan. 26, 1915. Mitchell. Carburetor.
*1,126,690. Jan., 1915. Beucus. Carburetor.
*1,130,228. Mar. 2, 1915. Whiting. Vaporizer for internal-combustion engines.
*1,132,934. Mar. 23, 1915. Heitger. Carburetor.
*1,135,270. Apr. 13, 1915. Duryea. Carburetor.
*1,135,689. Apr. 13, 1915. Harroun. Carburetor.
*1,137,727. May 4, 1915. Abernethy. Carburetor for internal-combustion engines.
*1,137,728. May 4, 1915. Abernethy. Carburetor for vaporizer for explosive engines.
*1,138,204. May 4, 1915. Folberth. Carburetor.
*1,139,914. May 18, 1915. Smillie. Carburetor.
*1,140,525. May 25, 1915, Motsinger. Proportioning device especially designed for carburetors.
*1,141,085. May 25, 1915. Kent. Carburetor.
*1,145,172. July 6, 1915. Speed. Carburetor.
*1,145,854. July 6, 1915. Winkley & Hart. Carburetor for hydrocarbon motors.
*1,145,871. July 6, 1915. Smith. Carburetor.
*1,146,181. July 13, 1915. Lippold. Carburetor.
*1,147,672. July 20, 1915. Bell. Carburetor.
*1,149,908. Aug. 10, 1915. Goudard & Mennesson. Carburetor.
*1,156,823. Oct. 12, 1915. Schebler. Carburetor.
*1,158,324. Oct. 26, 1915. Smith. Carburetor.
*1,158,359. Oct. 26, 1915. Abell. Carburetor.
*1,159,005. Nov. 2. 1915. Funderburk. Carburetor.
*1,159,029. Nov. 2, 1915. Hodges. Carburetor.
*1,159,049. Nov. 2, 1915. Kirby. Carburetor.
*1,161,374. Nov. 23, 1915. Bjorklund. Carburetor.
*1,165,359. Dec. 21, 1915. Motsinger. Carburetor.
*1,167,426. Jan. 11, 1916. Park. Carburetor.
*1,168,782. Jan. 18, 1916. Bucker. Carburetor.
*1,169,574. Jan. 25, 1916. Schultz. Carburetor.
*1,171,679. Feb. 15, 1916. Vellguth. Carburetor.
*1,171,716. Feb. 15, 1916. Haas. Carburetor.
*1,172,258. Feb. 22, 1916. Coulombe. Carbureting mechanism for gas engines.
*1,172,595. Feb. 22, 1916. Heath & Taylor. Carburetor.
*1,178,064. Apr. 4, 1916. Fahrney. Carburetor.
*1,178,478. Apr. 4, 1916. Sunderman. Carburetor.
*1,178,866. Apr. 11, 1916. Meier. Carburetor.
*1,179,568. Apr. 18, 1916. Schortt. Carburetor.
*1,179,913. Apr. 18, 1916. Hamill. Carburetor.
*1,181,856. May 2, 1916. Tjompson & Arkenberg. Carburetor.
*1,183,538. May 16, 1916. Collett. Carburetor.
*1,184,696. May 23, 1916. Costa. Carburetor.
*1,192,106. July 15, 1916. Pembroke. Carburetor.
1,187,996. June 20, 1916. Kapp. Carburetor.
*Re. 13,908 (orig. 783,902). Apr. 20, 1915. Shipman. Carburetor.

Cross-reference patents, class 48, subclass 154.1.

938,894	1,022,826	1,065,503	1,116,673	1,130,950	1,147,337	1,166,178
975,696	1,023,470	1,074,575	1,119,076	1,131,157	1,148,247	1,167,217
976,237	1,038,050	1,082,007	1,119,078	1,133,904	1,155,407	1,168,783
976,409	1,042,004	1,086,226	1,130,350	1,138,829	1,156,836	1,173,762
995,919	1,052,051	1,101,736	1,130,474	1,140,000	1,162,680	Re. 13,580
1,020,198	1,061,995	1,108,245	1,130,502	1,143,779	1,164,661	

SUBCLASS 155, CARBURETORS, ATOMIZERS.

49,984. Sept. 2, 1865. Terry. Improved apparatus for carbureting air.
53,481. Mar. 27, 1866. Pond & Richardson. Improved apparatus for carbureting air.
63,326. Mar. 26, 1867. Stephenson. Improved apparatus for carbureting gas and air.
66,009. June 25, 1867. Bassett. Carburetor.
146,458. Jan. 13, 1874. Jüngling. Improvement in carburetor.
146,493. Jan. 13, 1874. Vasquez. Improvement in carburetors.
228,547. June 8, 1880. Maxim. Gas apparatus.
238,757. Mar. 15, 1881. Brainard. Carburetor.
272,848. Feb. 27, 1883. Billings. Apparatus for manufacturing gas.
320,460. June 23, 1885. Copeland. Carburetor.
367,936. Aug. 9, 1887. Shaw. Hydrocarbon and gas-impulse feeder for gas engines.
423,898. Mar. 25, 1890. Bradley. Air carburetor.
464,779. Dec. 8, 1891. Reichholm & Machlet. Apparatus for and method of making fuel gas.
483,003. Sept. 20, 1892. Mendenhall. Apparatus for carbureting air.
485,877. Nov. 8, 1892. Noteman. Apparatus for making gas.
498,678. May 30, 1893. Mulvey. Apparatus for carbureting air.
509,174. Nov. 21, 1893. Lawrence. Apparatus for carbureting gas.
576,108. Feb. 2, 1897. Gibson. Carburetor.
*581,930. May 4, 1897. Alderson. Gas mixer.
*593,911. Nov. 16, 1897. Snow. Vaporizing carburetor and air governor for gas engine.
652,631. June 26, 1900. Pender. Carburetor.
*654,894. July 31, 1900. Hasbrouch. Regulator for gasoline or other like engines.
*657,740. Sept. 11, 1900. Kiltz. Carburetor for gas engines.
*666,623. Jan. 22, 1901. Gebhart. Hydrocarbon vaporizer and mixer for explosion engines.
677,852. July 9, 1901. Brown & Donnelly. Carburetor.
678,194. July 9, 1901. Pickles. Carburetor.
702,378. June 10, 1902. Roemisch & Orre. Carburetor.
*705,314. July 22, 1902. Blake. Carburetor.
*706,050. Aug. 5, 1902. Hardy. Mixing valve for gas or gasoline engines.
713,983. Nov. 18, 1902. Heath. Carburetor for explosive engines.
*721,238. Feb. 24, 1903. Rousseau. Vapor feeder and throttle for gas engines.
*725,741. Apr. 21, 1903. Miller. Fuel-feed regulator for explosive engines.
*726,191. Apr. 21, 1903. Readle. Vaporizing valve for explosive engines.
736,157. Aug. 11, 1903. Sams. Atomizing and carbureting device.
758,789. May 3, 1904. Sining carburetor.
*761,192. May 31, 1904. Bean. Mixing and vaporizing device for motors.
*770,559. Sept. 20, 1904. Clay. Carburetor for explosive engines.
*793,498. June 27, 1905. Ash. Carburetor for hydrocarbon engines.
797,615. Aug. 22, 1905. Schmitt. Carburetor.
*807,144. Dec. 12, 1905. Walker. Carburetor.
*817,721. Apr. 10, 1906. Lewis. Carburetor.
*827,094. July 31, 1906. Grant. Carburetor.
828,274. Aug. 7, 1906. Cornish. Carburetor.
828,940. Aug. 21, 1906. Lanard. Carburetor.
*836,764. Nov. 27, 1906. Heath. Carburetor.
846,395. Mar. 5, 1907. Busenbenz. Gas-manufacturing apparatus.
*856,638. June 11, 1907. Higgins. Carburetor.
857,180. June 18, 1907. Way. Carburetor.
861,758. July 30, 1907. McCanna. Carburetor.
864,037. Aug. 20, 1907. Selley. Carburetor.
*867,604. Oct. 8, 1907. Rothe. Carburetor.
878,297. Feb. 4, 1908. Levavasseur. Carburetor.
*878,824. Feb. 11, 1908. Newbrough. Carburetor for explosive engines.
885,230. Apr. 21, 1908. Von Dulong. Apparatus for the production of gases from hydrocarbon.
890,970. June 16, 1908. Dörr. Carbureting apparatus for explosive engines.
896,422. Aug. 18, 1908. Sylva. Carbureting and oil-separating apparatus.
*905,012. Nov. 24, 1908. Spranger. Carburetor.

907,123. Dec. 22, 1908. Broderick. Carburetor.
*939,481. Nov. 9, 1909. Dickson. Carburetor.
940,652. Nov. 16, 1909. Nye. Carburetor.
*962,140. June 21, 1910. Hall & Dicks. Carburetor.
*968,215. Aug. 23, 1910. Westaway. Carburetor.
*973,937. Oct. 25, 1910. Haines. Carburetor.
*974,076. Oct. 25, 1910. Kingston. Carburetor.
985,500. Feb. 28, 1911. Baujard. Carburetor.
*1,041,662. Oct. 15, 1912. Noyes. Vacuum fuel feeder and carburetor.
*1,081,900. Dec. 16, 1913. Fagerberg. Engine primer.
1,104,222. July 21, 1914. Rimmer et al. Carburetor.
1,118,897. Nov. 24, 1914. Dougherty. Means for carbureting air.
*1,127,120. Feb. 2, 1915. Veeder. Carburetor.
*1,141,258. June 1, 1915. Noyes. Liquid feeder for burners, etc.
*1,155,232. Sept. 28, 1915. Hagar. Carburetor.
1,155,829. Oct. 5, 1915. McAdam. Carburetor.
*1,163,749. Dec. 14, 1915. Gallagher. Carburetor.
*1,184,873. May 30, 1916. Raymond. Carburetor.
1,187,826. June 20, 1916. France. Carburetor nozzle.
1,188,754. June 27, 1916. Geer et al. Fuel-oil atomizer.
*Re. 13,111 (orig. 886,638). May 3, 1910. Higgins. Carburetor.

Cross-reference patents, class 48, subclass. 155.

182,025	696,281	773,543	848,963	961,481	995,623	1,106,192
212,502	746,119	778,988	871,480	976,781	1,001,847	1,116,325
623,321	750,764	793,776	881,431	977,813	1,037,838	1,141,258
643,306	762,707	846,680	921,934	979,908	1,074,625	1,157,146

SUBCLASS 155.1, CARBURETORS, ATOMIZERS, CONSTANT LEVEL.

*634,242. Oct. 3, 1899. Lambert. Mixing device for gasoline engines.
*635,166. Oct. 17, 1899. Hay. Vaporizer for gas engines.
*644,566. Mar. 6, 1900. Aslakson. Internal-combustion engine.
*649,324. May 8, 1900. Longuemare. Carburetor for explosive engines.
*681,382. Aug. 27, 1901. Westman. Feed cup for explosive engines.
*682,596. Sept. 17, 1901. Aldrich. Carbureting device for explosive engines.
*690,989. Jan. 14, 1902. Olds. Liquid-fuel feed for explosive engines.
*693,773. Feb. 18, 1902. Bardwell. Carburetor for explosive engines.
697,555. Apr. 15, 1902. Settergren. Mixer or vaporizer for hydrocarbon engines.
*699,309. May 6, 1902. Hamilton. Carbureting device for internal-combustion motors.
*699,504. May 6, 1902. Duryea. Carburetor for explosive engines.
*702,469. June 17, 1902. Parkin. Carburetor for explosive engines.
*711,005. Oct. 14, 1902. Schebler. Carburetor.
*714,597. Nov. 25, 1902. Mors. Carburetor for explosive motors.
*719,486. Feb. 3, 1903. Messinger. Carburetor for internal-combustion engines.
*719,536. Feb. 3, 1903. Tuttle. Vaporizer or carburetor for explosive engines.
*724,648. Apr. 7, 1903. Zimmerman. Vaporizer for gas engines.
*727,972. May 12, 1903. Kingston. Carburetor for gasoline engines.
*729,467. May 26, 1903. White. Explosion engine.
*730,649. June 9, 1903. Hedstrom. Carburetor for explosive engines.
*734,348. July 28, 1903. Gill. Carburetor for explosive engines.
*737,463. Aug. 25, 1903. Pearson. Vaporizer for explosive engines.
*741,962. Oct. 20, 1903. Grouvelle & Arquembourg. Regulator for carburetors for explosive engines.
*745,063. Nov. 24, 1903. Jenness. Carburetor for gasoline engines.
*746,449. Dec. 8, 1903. Brennan. Carburetor for gas engines.
*756,908. Apr. 12, 1904. Swain. Carburetor for gas engines.
*759,001. May 8, 1904. Mohler. Carburetor for hydrocarbon engines.
*759,396. May 10, 1904. Rutenber. Carburetor for hydrocarbon engines.
*767,716. Aug. 16, 1904. Ritchie. Carburetor.
*771,096. Sept. 27, 1904. Richard. Carburetor for explosion engines.
*771,985. Oct. 11, 1904. Kingston. Carburetor for gasoline engines.

*772,979. Oct. 25, 1904. Vaurs. Carburetor for hydrocarbon engines.
*775,553. Nov. 22, 1904. Burton & Seibel. Carburetor for hydrocarbon engines.
*776,406. Nov. 29, 1904. Lamb. Vaporizer for hydrocarbon engines.
*780,949. Jan. 24, 1905. Huber. Carburetor for hydrocarbon engines.
*789,537. May 9, 1905. Grouvelle & Arquembourg. Atomizing carburetor for explosive engines.
*789,749. May 16, 1905. Maxwell. Carburetor for gas engines.
*791,801. June 6, 1905. Leinau. Carburetor for hydrocarbon engines.
*791,810. June 6, 1905. Orr. Carburetor.
*794,502. July 11, 1905. Hennebutte. Carburetor.
*794,927. July 18, 1905. Cushman. Carburetor.
*794,951. July 18, 1905. Shaaf & Lacy. Carburetor.
*795,357. July 25, 1905. Maxwell. Carburetor.
*797,972. Aug. 22, 1905. Moreland. Vaporizer for explosive engines.
*802,038. Oct. 17, 1905. Hagar. Carburetor for hydrocarbon engines.
*804,025. Nov. 7, 1905. Minton. Carburetor for gas engines.
*813,683. Feb. 27, 1906. Adams. Carburetor.
*815,712. Mar. 20, 1906. Johnston. Carburetor for explosive engines.
* 816,846. Apr. 3, 1906. Charron & Girardot. Carburetor for petroleum motors.
* 817,641. Apr. 10, 1906. Harris. Carburetor.
* 817,903. Apr. 17, 1906. Comstock. Carburetor.
* 821,081. May 22, 1906. Brennan. Carburetor.
* 823,608. June 19, 1906. Malezieux. Carburetor for explosive engines.
* 825,499. July 10, 1906. Sturtevant. Carburetor for gas engines.
* 825,754. July 10, 1906. Pearson. Vaporizer for hydrocarbon engines.
* 826,531. July 24, 1906. Briest. Carburetor.
* 828,228. Aug. 7, 1906. Menns. Carburetor.
* 829,345. Aug. 21, 1906. Menns. Carburetor.
* 842,052. Jan. 22, 1907. Anderson. Carburetor.
* 846,903. Mar. 12, 1907. Bradbeer. Carburetor.
* 851,285. Apr. 23, 1907. Freeman. Carburetor for an explosive engine.
* 853,428. May 14, 1907. Trebert. Carburetor.
* 854,246. May 21, 1907. Smith. Carburetor.
* 855,179. May 28, 1907. Jenness. Carburetor.
* 859,719. July 9, 1907. Anderson. Carburetor.
* 862,083. July 30, 1907. Longennecker. Carburetor.
* 863,739. Aug. 20, 1907. Maxwell. Carburetor.
* 864,111. Aug. 20, 1907. Sickles. Carburetor.
* 865,522. Sept. 10, 1907. Park. Carburetor.
* 873,392. Dec. 10, 1907. Stoker. Carburetor.
* 876,800. Jan. 14, 1908. Gundelach. Carburetor.
* 878,770. Feb. 11, 1908. Cahill. Carburetor.
* 881,279. Mar. 10, 1908. Allen. Carburetor for internal-combustion engines.
* 883,740. Apr. 7, 1908. Poppe. Spray carburetor.
* 886,526. May 5, 1908. Marr. Carburetor.
* 886,527. May 5, 1908. Marr. Carburetor.
* 889,487. June 2, 1908. Schneble. Carburetor for internal-combustion engines.
* 889,558. June 2, 1908. Thomas. Carburetor.
* 890,273. June 9, 1908. Maak & Munzert. Carburetor.
* 893,685. July 31, 1908. Willard. Carburetor.
* 898,361. Sept. 8, 1908. Heitger. Carburetor.
* 900,098. Oct. 6, 1908. Heitger. Carburetor.
* 907,279. Dec. 22, 1908. Perry. Carburetor
* 907,881. Dec. 29, 1908. Reineking. Carburetor.
* 908,764. Jan. 5, 1909. Fosnot. Carburetor for explosive engines.
* 910,326. Jan. 19, 1909. Stevenson. Carburetor.
* 911,153. Feb. 2, 1909. Otis. Carburetor.
* 911,349. Feb. 2, 1909. Weiland. Carburetor.
* 913,354. Feb. 23, 1909. Breese. Carburetor.
* 915,647. Mar. 16, 1909. Young. Carburetor.
* 920,231. May 4, 1909. White. Carburetor for internal-combustion engines.
* 924,673. June 15, 1909. Knickerboxer. Carburetor.
* 926,039. June 22, 1909. Warren. Carburetor.
* 928,828. July 20, 1909. Winton. Carburetor.
* 930,724. Aug. 10, 1909. Boore. Carburetor.

*932,360. Aug. 24, 1909. Watt. Carburetor.
*935,833. Oct. 5, 1909. Bassford. Carburetor.
*936,118. Oct. 5, 1909. Glover. Carburetor.
*936,337. Oct. 12, 1909. Maybach. Carburetor.
*937,536. Oct. 19, 1909. Knight. Carburetor.
*945,167. Jan. 10, 1910. Holley. Carburetor.
*947,712. Jan. 25, 1910. Hendricks. Carburetor.
*950,278. Feb. 22, 1910. Basey. Carburetor.
*954,488. Apr. 12, 1910. Wolf. Carburetor.
*954,630. Apr. 12, 1910. Howarth. Carburetor.
*955,292. Apr. 10, 1910. Sickles. Carburetor.
*957,976. May 17, 1910. Lucas. Atomizer and the like.
*958,128. May 17, 1910. Howarth. Carburetor.
*958,897. May 24, 1910. Snedeker. Carburetor.
*960,601. June 7, 1910. Stewart. Carburetor.
*960,697. June 7, 1910. Plein. Carburetor.
*963,187. July 5, 1910. Tuerk. Carburetor.
*967,407. Aug. 16, 1910. Mayer. Carburetor for explosive engines.
*973,855. Oct. 25, 1910. Cannon. Carburetor.
*976,822. Nov. 22, 1910. Walters. Carburetor.
*976,844. Nov. 22, 1910. Christofferson et al. Carburetor.
*976,409. Nov. 22, 1910. Stickler. Vaporizer or carburetor.
*976,692. Nov. 22, 1910. Reichenbach. Carburetor.
*976,813. Nov. 22, 1910. Kreis. Carburetor.
*977,831. Dec. 6, 1910. Page. Carburetor.
*980,668. Jan. 8, 1911. Paull. Carburetor.
*983,247. Jan. 31, 1911. Miller. Carburetor.
*983,541. Feb. 7, 1911. Dawson. Carburetor.
*983,836. Feb. 7, 1911. Plein. Carburetor.
*985,431. Feb. 28, 1911. McHardy & Potter. Carburetor.
*985,999. Mar. 7, 1911. Harris. Carburetor.
*988,638. Apr. 4, 1911. Harris. Carburetor.
*988,800. Apr. 4, 1911. McHardy & Potter. Carburetor.
993,065. May 23, 1911. Herschberger. Carburetor.
*993,097. May 23, 1911. Noyes. Anterior-throttles carburetor.
*998,457. July 18, 1911. Bingham. Carburetor.
*1,000,451. Aug. 15, 1911. Stevenson. Carburetor.
*1,000,518. Aug. 15, 1911. Harris. Carburetor.
1,002,458. Sept. 5, 1911. Sekowsky. Carburetor.
*1,002,646. Sept. 5, 1911. Conrad. Carburetor.
*1,005,491. Oct. 10, 1911. Wiland. Carburetor.
*1,006,088. Oct. 17, 1911. Hippisley. Carburetor.
*1,007,729. Nov. 7, 1911. Poppe. Carburetor for internal-combustion engines.
*1,011,565. Dec. 12, 1911. Brock. Carburetor.
*1,012,781. Dec. 26, 1911. Winters. Carburetor.
*1,013,708. Jan. 2, 1912. Weiland. Carburetor.
*1,014,188. Jan. 9, 1912. Voorhees. Carburetor.
*1,016,251. Feb. 6, 1912. Dayton. Carburetor.
1,017,186. Feb. 13, 1912. Stewart. Carburetor.
*1,019,209. Mar. 5, 1912. Welsh. Carburetor.
*1,020,198. Mar. 12, 1912. Hamill. Carburetor for internal-combustion engines.
*1,020,931. Mar. 19, 1912. Smith. Carburetor.
*1,023,470. Apr. 16, 1912. Hill & Underwood. Carburetor.
*1,026,491. May 14, 1912. Browning. Carburetor.
*1,027,459. May 28, 1912. Barnard. Carburetor.
*1,028,723. June 4, 1912. Hezinger. Carburetor.
*1,029,796. June 18, 1912. Dawson. Apparatus for producing an explosive or combustible mixture of liquid fuel and air.
*1,031,147. July 2, 1912. Plumm. Spray carburetor.
*1,033,886. July 30, 1912. Gentle. Carburetor.
*1,036,801. Aug. 20, 1912. Miller. Carburetor.
*1,037,883. Sept. 3, 1912. Noyes. Automatic regulation for carburetors.
*1,037,884. Sept. 3, 1912. Raymond. Carburetor.
*1,038,804. Sept. 12, 1912. Warren. Carburetor.
*1,038,921. Sept. 17, 1912. Martin. Carburetor.
*1,042,077. Oct. 22, 1912. Brown. Carburetor.

*1,042,606. Oct. 29, 1912. Roth. Carburetor.
*1,042,528. Oct. 29, 1912. Brown. Carburetor.
*1,043,077. Nov. 5, 1912. Dock. Carburetor.
*1,044,754. Nov. 19, 1912. Coulter. Carburetor.
*1,045,251. Nov. 26, 1912. Bourne. Carburetor.
*1,045,613. Nov. 26, 1912. Roth. Carburetor.
*1,049,088. Dec. 31, 1912. Barstow & Bradford. Carburetor for internal-combustion engines.
*1,052,051. Feb. 4, 1913. Grimes. Carburetor.
*1,052,397. Feb. 4, 1913. Wingfield. Carburetor for petrol motors.
*1,053,136. Feb. 11, 1913. Daellenbach. Carburetor.
*1,055,042. Mar. 4, 1913. Higgins. Carburetor.
*1,057,506. Apr. 1, 1913. Stevens. Carburetor for internal-combustion engines.
*1,061,995. May 20, 1913. Erickson. Carburetor.
*1,064,627. June 10, 1913. Ensign. Vaporizer.
*1,064,628. June 10, 1913. Ensign. Carburetor.
1,064,866. June 17, 1913. Stewart. Throttle for carburetors.
*1,065,067. June 17, 1913. Naczek. Carburetor.
*1,065,462. June 24, 1913. Miller. Carburetor.
*1,065,503. June 24, 1913. Byrom. Carburetor.
*1,066,608. July 8, 1913. Harris. Carburetor.
*1,067,449. July 15, 1913. Steward. Carburetor.
*1,072,376. Sept. 2, 1913. Alden. Carburetor.
*1,072,492. Sept. 9, 1913. Pierson. Carburetor.
*1,072,565. Sept. 9, 1913. Bräutigam. Carburetor.
*1,074,625. Oct. 7, 1913. Johnson et al. Carburetor.
*1,081,203. Dec. 9, 1913. Bull. Carburetor.
1,081,258. Dec. 9, 1913. Ulrich & Rahr. Carburetor.
*1,082,466. Dec. 23, 1913. Lucas. Carburetor for internal-combustion engines.
*1,085,003. Jan. 20, 1914. Austin. Carburetor.
*1,086,226. Feb. 3, 1914. Sassano. Carburetor.
*1,086,594. Feb. 10, 1914. Goldberg. Carburetor.
*1,088,181. Feb. 24, 1914. Raymond. Carburetor.
*1,088,664. Feb. 24, 1914. Lamb. Vaporizer for internal-combustion engines.
*1,088,974. Mar. 3, 1914. Drysdale. Carburetor.
*1,090,209. Mar. 17, 1914. Heitger. Carburetor.
*1,091,426. Mar. 24, 1914. Davis. Carburetor.
*1,092,953. Apr. 14, 1914. Sanborn. Carburetor.
*1,095,101. Apr. 28, 1914. Gardner. Carburetor.
*1,095,510. May 5, 1914. Miller. Carburetor.
*1,096,482. May 12, 1914. Winton. Carburetor.
*1,096,626. May 12, 1914. Heftler. Carburetor.
*1,097,165. May 19, 1914. Bucherer. Spray carburetor.
*1,097,401. May 19, 1914. Donndorf. Jet carburetor.
*1,101,736. June 30, 1914. Gillet. Carburetor.
*1,103,178. July 14, 1914. Eiker. Carburetor.
*1,103,802. July 14, 1914. Meissner. Carburetor.
*1,103,864. July 14, 1914. Howarth. Carburetor.
*1,105,200. July 28, 1914. Brown. Carburetor.
*1,106,258. Aug. 4, 1914. Tucker & Wilding. Carburetor.
*1,107,698. Aug. 18, 1914. Norton. Carburetor.
*1,107,713. Aug. 18, 1914. Shakespeare & Schmidt. Carburetor.
*1,108,727. Aug. 25, 1914. Ensign. Vaporizer.
*1,111,768. Sept. 29, 1914. Rogers. Carburetor.
*1,113,221. Oct. 13, 1914. Krause. Carburetor.
*1,113,583. Oct. 13, 1914. Barrett. Carburetor.
*1,116,023. Nov. 3, 1914. Crawford. Carburetor.
*1,116,581. Nov. 10, 1914. Foulds. Carburetor.
*1,116,986. Nov. 10, 1914. Bull. Carburetor for internal-combustion engines.
*1,118,459. Nov. 24, 1914. Winkler. Self-leveling carburetor.
*1,118,917. Dec. 1, 1914. Bucker. Carburetor.
*1,118,919. Dec. 1, 1914. Canda. Carburetor.
*1,119,181. Dec. 1, 1914. Leduc. Carburetor.
*1,119,821. Dec. 8, 1914. Gilliland & Sharpneck. Carburetor.
*1,120,763. Dec. 15, 1914. Thomas. Carburetor.
*1,120,845. Dec. 15, 1914. Parkin. Carburetor.
*1,121,630. Dec. 22, 1914. Holley. Carburetor.

*1,123,027. Dec. 29, 1914. Simonson. Carburetor.
*1,123,955. Jan. 5, 1915. Tice. Carburetor.
*1,124,949. Jan. 12, 1915. Raymond. Carburetor.
*1,125,338. Jan. 19, 1915. Keizer. Carburetor.
*1,125,339. Jan. 19, 1915. Keizer. Carburetor.
*1,125,340. Jan. 19, 1915. Keizer. Carburetor.
*1,126,127. Jan. 26, 1915. Swan. Carburetor.
1,127,286. Feb. 2, 1915. Russell. Carburetor.
*1,129,103. Feb. 23, 1915. Keller. Carburetor for explosive engines.
*1,129,129. Feb. 23, 1915. Shakespeare & Schmidt. Carburetor.
*1,130,981. Mar. 9, 1915. Kingston. Carburetor.
*1,131,312. Mar. 9, 1915. Beamer & Duffy. Carburetor.
*1,132,314. Mar. 16, 1915. Etker. Carburetor.
*1,133,754. Mar. 30, 1915. Shortt. Carburetor.
*1,134,021. Mar. 30, 1915. Sohon. Carburetor.
*1,134,365. Apr. 6, 1915. Barnes. Carburetor.
*1,135,046. Apr. 13, 1915. Ottaway. Carburetor.
*1,135,315. Apr. 13, 1915. Odell. Carburetor.
*1,135,544. Apr. 13, 1915. Norton. Carburetor.
*1,135,729. Apr. 13, 1915. Schoof. Carburetor.
*1,137,238. Apr. 27, 1915. Sherman. Carburetor.
*1,137,307. Apr. 27, 1915. Edens. Carburetor.
*1,139,851. May 18, 1915. Dayton. Carburetor.
*1,140,071. May 18, 1915. Rothe. Carburetor.
*1,140,232. May 18, 1915. Allen. Carburetor.
*1,140,721. May 25, 1915. Stamps. Carburetor.
*1,140,722. May 25, 1915. Stamps. Carburetor.
*1,142,763. June 8, 1915. Perry. Carburetor.
*1,143,227. June 15, 1915. Prescott. Carburetor.
*1,143,511. June 15, 1915. Cox. Carburetor.
*1,148,333. July 27, 1915. Payne. Carburetor.
*1,148,898. Aug. 3, 1915. Henley. Carburetor.
*1,149,035. Aug. 3, 1915. Doué. Carburetor.
*1,149,743. Aug. 10, 1915. Epgland. Thermostatic control for the valve of a carburetor.
*1,150,782. Aug. 17, 1915. Lucas. Carburetor for internal-combustion engines.
*1,151,159. Aug. 24, 1915. Brown. Carburetor.
*1,151,286. Aug. 24, 1915. Rowell. Carburetor.
*1,153,891. Sept. 21, 1915. Breath. Carburetor.
*1,151,578. Aug. 31, 1915. Entz. Carburetor.
*1,153,999. Sept. 21, 1915. Carpenter. Carburetor.
*1,157,363. Oct. 19, 1915. Blomquist. Carburetor.
*1,157,507. Oct. 19, 1915. Cerný. Carburetor.
*1,157,541. Oct. 19, 1915. Huskisson. Carburetor.
*1,160,662. Nov. 16, 1915. Slaby. Carburetor.
*1,161,437. Nov. 23, 1915. Beamer & Duffy. Carburetor.
*1,162,111. Nov. 30, 1915. Simpson. Carburetor.
*1,162,576. Nov. 30, 1915. Daimler & Slaby. Throttle valve for carburetors.
*1,163,581. Dec. 7, 1915. Alley. Carburetor.
*1,163,749. Dec. 14, 1915. Gl. Gallagher. Carburetor.
*1,165,087. Dec. 21, 1915. Fulton. Carburetor.
*1,165,224. Dec. 21, 1915. Cadett. Carburetor.
*1,169,483. Jan. 25, 1916. Henley. Carburetor.
*1,171,285. Feb. 8, 1916. Olsen. Carburetor.
*1,173,378. Feb. 29, 1916. Payton. Carburetor.
*1,173,762. Feb. 29, 1916. Arquembourg. Carburetor.
*1,174,529. Mar. 7, 1916. Sykes. Carburetor.
*1,177,395. Mar. 28, 1916. Dickie. Carburetor.
*1,178,127. Apr. 4, 1916. Bricken. Carburetor.
*1,178,296. Apr. 4, 1916. Cahill. Carburetor.
*1,179,663. Apr. 18, 1916. Shakespeare & Schmid. Carburetor.
*1,180,939. Apr. 25, 1916. Ostenberg. Carburetor.
*1,181,514. May 2, 1916. Eynon. Carburetor.
*1,183,125. May 16, 1916. Shakespeare & Schmid. Carburetor.
*1,184,541. May 23, 1916. Kustel. Carburetor.
*1,184,873. May 30, 1916. Raymond. Carburetor.
*1,184,888. May 30, 1916. Stevens. Carburetor.

*1,184,889. May 30, 1916. Stevens. Carburetor.
*1,185,574. May 30, 1916. Allen. Carburetor.
1,186,976. June 13, 1916. Dingrey. Carburetor.
1,186,588. June 13, 1916. Lemon. Carburetor.
1,187,945. June 20, 1916. Briggle. Carburetor.
*1,190,715. July 11, 1916. Bottome. Carburetor.
*1,192,213. July 25, 1916. Lamb. Carburetor.

Cross-reference patents, class 48, subclass 155.1.

62,856	741,810	807,479	907,123	954,905	964,657	968,215
726,986	747,285	862,574	909,490	959,066	966,381	971,862
738,625	760,673	891,322	915,684			
973,877	1,005,300	1,038,699	1,078,473	1,120,128	1,151,989	1,166,734
978,076	1,006,411	1,040,414	1,078,582	1,124,697	1,152,178	1,167,457
979,700	1,007,659	1,040,619	1,084,028	1,131,371	1,153,486	1,169,340
984,082	1,008,155	1,041,099	1,089,089	1,134,866	1,153,487	1,169,592
984,109	1,011,960	1,043,342	1,097,039	1,141,570	1,155,457	1,170,416
985,670	1,018,164	1,046,141	1,099,086	1,144,206	1,157,116	1,171,074
986,572	1,018,776	1,048,518	1,105,003	1,145,476	1,159,423	1,176,267
995,976	1,029,897	1,062,688	1,106,226	1,148,485	1,163,223	
1,001,950	1,033,443	1,065,948	1,106,985	1,149,908	1,165,914	
1,001,969	1,038,262	1,078,179	1,110,453	1,150,115	1,166,595	

SUBCLASS 155.2, CARBURETORS, ATOMIZERS, CONSTANT LEVEL, AUTOMATIC DILUTION.

*656,197. Aug. 21, 1900. Lumière. Carburetor for petroleum or other engines.
*654,841. Jan. 1, 1901. Duryea. Mixer for explosive engines.
*667,910. Feb. 12, 1901. Hatcher & Packard. Mixer and vaporizer for explosive engines.
*713,146. Nov. 11, 1902. Power. Vaporizing carburetor.
*744,257. Nov. 17, 1903. Sturtevant. Carburetor for explosion engines.
*774,079. Nov. 1, 1904. Jager. Vaporizing carburetor for internal-combustion engines.
*783,902. Feb. 28, 1905. Shipman. Carburetor for explosive engines.
*785,558. Mar. 21, 1905. Krebs. Oil engine.
*785,622. Mar. 21, 1905. Longuemare. Carburetor for hydrocarbon engines.
*790,173. May 16, 1905. Blehn. Carburetor for explosive engines.
*791,447. June 6, 1905. Breath. Atomizer for internal-combustion engines.
*792,628. June 20, 1905. Sturtevant. Carburetor for gas engines.
*796,723. Aug. 8, 1905. Hewitt. Carburetor.
*799,791. Sept. 19, 1905. Hitchcock. Vaporizer for hydrocarbon engines.
*800,647. Oct. 3, 1905. Hatcher. Carburetor.
*802,216. Oct. 17, 1905. Johnston. Carburetor for hydrocarbon engines.
*806,830. Dec. 12, 1905. Packard. Mixer and vaporizer for hydrocarbon engines.
*810,792. Jan. 23, 1906. McIntosh. Carburetor.
*813,653. Feb. 27, 1906. Law. Carburetor.
*820,583. May 15, 1906. Longuemare. Carburetor for hydrocarbon engines.
*822,681. June 5, 1906. Middleton. Carburetor for gasoline engines.
*831,547. Sept. 25, 1906. Dunlop. Carburetor for explosive engines.
*831,882. Sept. 25, 1906. Coffin. Carburetor for hydrocarbon engines.
*835,564. Nov. 13, 1906. Shain. Vaporizer or carburetor.
*835,880. Nov. 13, 1906. Clément. Carburetor.
*838,085. Dec. 11, 1906. Cook. Carburetor for explosive engines.
*840,204. Jan. 1, 1907. Franquist. Carburetor.
*844,894. Feb. 19, 1907. Renault. Carburetor.
*848,170. Mar. 26, 1907. Hedstrom. Carburetor.
*850,339. Apr. 16, 1907. Bowers. Carburetor for gasoline engines.
*855,170. May 28, 1907. Gray. Carburetor.
*855,574. June 4, 1907. Henabray. Carburetor.
*856,958. June 11, 1907. Huber. Carburetor for hydrocarbon engines.
*857,275. June 18, 1907. Gaither. Carburetor.
860,522. July 16, 1907. Brown. Carburetor.
*860,848. July 28, 1907. Bowers. Carburetor.
*860,908. July 23, 1907. Enrico. Carburetor for oil engines.
*861,438. July 30, 1907. Cushman. Carburetor.
*864,687. Aug. 27, 1907. Radcliffe. Vaporizer.

*865,539. Sept. 10, 1907. Stewart. Carburetor.
*868,251. Oct. 15, 1907. Bollée. Carburetor.
*868,265. Oct. 15, 1907. Hartford. Carburetor for internal-combustion engines.
*869,675. Oct. 29, 1907. Winton. Gasoline carburetor.
*870,052. Nov. 5, 1907. Schebler. Carburetor.
*875,716. Jan. 7, 1908. Longuemare. Carburetor for explosive engines.
*876,287. Jan. 7, 1908. Williams. Carburetor.
877,136. Jan. 21, 1908. Stewart. Carburetor.
*878,411. Feb. 4, 1908. Winton. Carburetor for internal-combustion engines.
*882,023. Mar. 17, 1908. Shain. Vaporizer or carburetor for gas engines.
*886,265. Apr. 28, 1908. Speed. Rapid-fire carburetor.
*886,760. May 5, 1908. Brush. Carbureting mechanism for internal-combustion engines.
*888,487. May 26, 1908. Greuter. Carburetor.
*888,965. May 26, 1908. Delaunay-Belleville. Automatic carburetor for explosive motors.
*890,494. June 9, 1908. Byron. Carburetor.
*896,559. Aug. 18, 1908. Longuemare. Air inlet for carburetor.
*899,109. Sept. 22, 1908. Heitger. Carburetor.
*900,731. Oct. 13, 1908. Heitger. Carburetor.
*910,379. Jan. 19, 1909. Hedstrom. Carburetor.
*911,105. Feb. 3, 1909. Abel. Carburetor.
*911,692. Feb. 9, 1909. Andrew. Carburetor.
*912,083. Feb. 9, 1909. Daley. Carburetor for internal-combustion engines.
*916,103. Mar. 23, 1909. Cartwright. Carburetor for explosive engines.
916,214. Mar. 23, 1909. Stewart. Controller for carburetors.
*920,642. May 4, 1909. Pfänder. Automatically governed carburetor.
*921,410. May 11, 1909. Kaley. Carburetor.
*924,200. June 8, 1909. Stewart. Carburetor.
*925,978. June 22, 1909. Winton & Anderson. Carburetor.
*926,533. June 29, 1909. Winton & Anderson. Carburetor.
*926,598. June 29, 1909. Perry. Carburetor.
*927,529. July 14, 1909. Harrington. Carburetor.
*928,042. July 13, 1909. Goldberg. Carburetor.
*929,260. July 27, 1909. Stevens. Carburetor.
*929,327. July 27, 1909. Rinke. Carburetor.
*932,860. Aug. 31, 1909. Grouvelle & Arquembourg. Carburetor for internal-combustion engines.
*938,894. Nov. 2, 1909. Rapp. Carburetor.
*942,977. Dec. 14, 1909. Simonson. Carburetor.
*943,197. Dec. 14, 1909. Miller. Carburetor.
*943,242. Dec. 14, 1909. Fergusson & Sheppy. Carburetor.
*944,048. Dec. 21, 1909. Price. Carburetor.
*956,882. May 3, 1910. Bright. Carburetor.
*960,080. May 31, 1910. Fay & Ellsworth. Carburetor.
960,084. May 31, 1910. Friedenwald & ———. Auxiliary air valve for charge-forming devices.
*961,590. June 14, 1910. England. Valve for carburetors and other apparatus.
*968,597. Aug. 30, 1910. Parkin. Carburetor.
*970,916. Sept. 20, 1910. Gerken. Carburetor for gas engines.
*971,689. Oct. 4, 1910. Schebler. Carburetor.
*973,056. Oct. 18, 1910. Mader. Carburetor valve.
*973,755. Oct. 25, 1910. Carter. Carburetor.
*973,877. Oct. 25, 1910. Pierce. Carburetor.
*976,558. Nov. 22, 1910. Dayton. Air-controlling mechanism for carburetors.
*977,377. Nov. 29, 1910. Donnelly et al. Triple auxiliary air valve for carburetors.
*981,156. Jan. 10, 1911. Barker. Carburetor.
*984,276. Feb. 14, 1911. Kelly. Carburetor.
*985,670. Feb. 28, 1911. Grouvelle et al. Carburetor.
*989,697. Apr. 18, 1911. Cutler. Carburetor.
*992,260. May 16, 1911. Rush. Vaporizer and separator.
*995,919. June 20, 1911. Smith. Carburetor.
*995,976. June 20, 1911. Maud. Carburetor.
*996,897. July 4, 1911. Swarts. Carburetor.
*996,981. July 4, 1911. Folberth. Carburetor.
*997,169. July 4, 1911. Winton & Anderson. Carburetor.

*997,283. July 4, 1911. Bowers. Carburetor.
*1,000,054. Aug. 8, 1911. Ulrich. Carburetor.
*1,001,969. Aug. 29, 1911. Maynard. Carburetor.
*1,003,994. Sept. 29, 1911. Dennis. Carburetor.
1,004,031. Sept. 29, 1911. Iver. Force-feed carburetor.
*1,005,300. Oct. 10, 1911. Pierce. Carburetor.
*1,006,083. Oct. 17, 1911. Ter Weer. Carburetor.
*1,006,663. Oct. 24, 1911. Kugler. Carburetor.
*1,010,714. Dec. 5, 1911. Zisch. Carburetor.
*1,013,082. Dec. 26, 1911. Symmonds. Carburetor.
*1,018,126. Feb. 20, 1912. Nageborn. Carburetor.
*1,018,164. Feb. 20, 1912. Chapin. Carburetor.
*1,018,766. Feb. 27, 1912. Kerr. Carburetor.
*1,018,776. Feb. 27, 1913. Plein. Carburetor.
*1,019,128. Mar. 5, 1912. Bulock. Carburetor.
*1,019,160. Mar. 5, 1912. Ivor. Carburetor.
*1,020,059. Mar. 12, 1912. Schulz. Carburetor.
*1,022,826. Apr. 2, 1912. Namur. Carburetor.
*1,035,937. Aug. 20, 1912. Anderson. Carburetor.
*1,038,050. Sept. 10, 1912. Wills. Carburetor.
*1,038,262. Sept. 10, 1912. Anstice. Carburetor.
*1,038,699. Sept. 17, 1912. Wilkinson. Carburetor.
*1,041,099. Oct. 15, 1912. Kerns. Carburetor.
*1,041,480. Oct. 15, 1912. Kaley. Carburetor.
*1,042,004. Oct. 22, 1912. Ivor. Carburetor.
*1,042,982. Oct. 29, 1912. Sliger. Carburetor.
*1,043,692. Nov. 5, 1912. Grath. Carburetor.
*1,044,245. Nov. 12, 1912. Reedy. Carburetor.
*1,044,569. Nov. 18, 1912. Perrin. Carburetor.
*1,044,576. Nov. 19, 1912. Russell. Carburetor.
*1,044,594. Nov. 19, 1912. Stroud. Carburetor.
*1,046,344. Dec. 3, 1912. Stewart. Carburetor.
*1,052,897. Feb. 11, 1913. Dayton. Carburetor.
*1,052,917. Feb. 11, 1913. Heitger. Carburetor.
*1,053,145. Feb. 18, 1913. Ball. Carburetor.
*1,055,352. Mar. 11, 1913. Pembroke. Carburetor.
*1,059,368. Apr. 22, 1913. Johnson. Carburetor.
*1,062,278. May 20, 1913. Conklin. Carburetors.
*1,062,688. May 27, 1913. Bastian. Carburetors.
*1,064,446. June 10, 1913. Comstock. Carburetor.
*1,067,502. July 15, 1913. Browne. Carburetor.
*1,069,671. Aug. 12, 1913. Brush. Carburetor.
*1,071,858. Sept. 2, 1913. Ball. Carburetor.
*1,073,478. Sept. 16, 1913. Claudel. Carburetor.
*1,073,695. Sept. 23, 1913. Marr. Carburetor.
*1,076,827. Oct. 28, 1913. Haynes. Carburetor.
*1,078,169. Nov. 11, 1913. Schreiber. Carburetor.
*1,080,166. Dec. 2, 1913. Pribil. Carburetor.
*1,080,645. Dec. 9, 1913. Mayer. Carburetor.
*1,086,287. Feb. 3, 1914. Gehrmann. Carburetor.
*1,089,423. Mar. 10, 1914. Mayer. Carburetor.
*1,090,556. Mar. 17, 1914. Mégevit & Picker. Carburetor for internal-combustion engines.
*1,092,282. Apr. 7, 1914. Mixsell. Carburetor.
*1,093,627. Apr. 21, 1914. Johnson. Carburetor.
*1,093,901. Apr. 21, 1914. Wyman. Carburetor.
*1,095,212. May 5, 1914. Johnson. Carburetor.
*1,095,326. May 5, 1914. Huff. Carburetor.
*1,096,569. May 12, 1914. Sharpneck. Carburetor.
*1,099,714. June 9, 1914. Munden. Carburetor.
*1,104,975. July 28, 1914. Felske. Carburetor.
*1,105,184. July 28, 1914. Hanemann. Carburetor.
*1,106,145. Aug. 4, 1914. Hazelton. Carburetor.
*1,106,226. Aug. 4, 1914. Lamb. Carburetor.
*1,106,802. Aug. 11, 1914. Goldberg. Carburetor.
*1,107,693. Aug. 18, 1914. Molina. Carburetor.
*1,107,849. Aug. 18, 1914. Schoen. Carburetor.

*1,109,356. Sept. 1, 1914. Mycue. Carburetor.
*1,110,041. Sept. 8, 1914. Christian. Carburetor.
1,110,482. Sept. 15, 1914. Collier. Carburetor.
*1,113,533. Oct. 13,1914. Barrett. Carburetor.
*1,115,543. Nov. 8, 1914. Huguelet. Carburetor.
*1,116,673. Nov. 10, 1914. De Clairmont. Air-valve control for carburetors.
*1,119,078. Dec. 1, 1914. Goldberg. Carburetor.
*1,119,757. Dec. 1, 1914. Kings. Carburetor.
*1,120,308. Dec. 8, 1914. Georgenson. Carburetor.
*1,122,572. Dec. 29, 1914. Blackert. Carburetor.
*1,124,918. Jan. 12, 1915. Krause. Carburetor.
*1,126,218. Jan. 26, 1915. Howe. Carburetor.
*1,127,992. Feb. 9, 1915. Hartshorn. Carbureto..
*1,129,864. Mar. 2, 1915. Haas. Carburetor.
*1,131,584. Mar. 9, 1915. Wildy. Spray carburetor.
*1,134,581. Apr. 6, 1915. Heitger. Carburetor.
*1,134,532. Apr. 6, 1915. Heitger. Carburetor.
*1,141,086. May 25, 1915. Kent. Carburetor.
*1,145,138. July 6, 1915. Goldberg. Carburetor.
*1,148,461. July 27, 1915. Russell. Carburetor.
*1,156,149. Oct. 12, 1915. Kingston. Carburetor.
*1,159,428. Nov. 9, 1915. Schulte. Carburetor.
*1,166,595. Jan. 4, 1916. Johnson. Carburetor.
*1,167,320. Jan. 4, 1916. Thomas. Carburetor.
*1,171,401. Feb. 8, 1916. Purcell. Carburetor.
*1,172,388. Feb. 22, 1916. Prescott. Carburetor.
*1,172,432. Feb. 22, 1916. Clark. Carburetor.
*1,176,729. Mar. 21, 1916. Flechter. Carburetor.
*1,177,318. Mar. 28, 1916. Goldberg. Carburetor.
*1,179,386. Apr. 18, 1916. Anderson. Carburetor.
*1,180,379. Apr. 25, 1916. Dayton. Carburetor.
*1,180,389. Apr. 25, 1916. Friend. Carburetor.
*1,183,137. May 16, 1916. Swarts. Carburetor.
1,186,166. June 6, 1916. Bennett. Carburetor.
1,186,584. June 13, 1916. Kingston. Carburetor. (Withdrawn.)
*1,185,273. May 30, 1916. Atherton. Carburetor.
*Re. 13,784 (orig. 1,067,502). Aug. 4, 1914. Browne. Carburetor.
*Re. 13,837 (orig. 1,042,982). Dec. 1, 1914. Sliger. Carburetor.

Cross-reference patents, class 48, subclass 155.2.

951,002	981,853	1,006,130	1,017,750	1,030,343	1,042,017	1,059,501
955,956	982,297	1,009,121	1,020,270	1,033,443	1,044,314	1,061,995
973,855	983,836	1,010,185	1,022,702	1,036,301	1,046,111	1,064,867
976,344	985,122	1,010,003	1,022,703	1,036,536	1,046,141	1,065,331
976,881	993,065	1,011,641	1,023,470	1,037,834	1,049,887	
979,555	1,001,847	1,011,960	1,027,768	1,040,528	1,051,440	
1,066,508	1,078,591	1,085,194	1,112,641	1,130,502	1,138,204	1,149,323
1,067,628	1,078,592	1,085,239	1,114,222	1,132,934	1,139,914	1,152,184
1,069,389	1,079,338	1,086,226	1,122,703	1,134,942	1,140,525	1,155,829
1,073,727	1,080,696	1,087,187	1,120,573	1,135,270	1,141,796	1,156,823
1,076,309	1,081,258	1,087,218	1,120,763	1,135,689	1,143,092	1,157,541
1,077,256	1,084,023	1,095,402	1,125,525	1,136,368	1,145,172	1,158,435
1,078,413	1,084,693	1,097,787	1,126,249	1,137,135	1,147,672	
1,078,590	1,084,954	1,103,864	1,128,773	1,137,727	1,149,291	

SUBCLASS 156, CARBURETORS, CAPILLARY.

59,474. Nov. 6, 1866. Stevens. Improved apparatus for carbureting air.
60,670. Jan. 1, 1867. Bassett. Improved capillary material for filling gas and air carburetors.
64,361. Apr. 30, 1867. Porter. Improved apparatus for carbureting gas and air.
66,066. June 25, 1867. Bassett. Improvement in gas carburetors.
81,974. Sept. 8, 1868. Bassett. Apparatus for the manufacturing of heating and illuminating gas.

83,748. Nov. 3, 1868. Williams. Improvement in charging gases with vapors of hydrocarbon liquids.
94,898. Sept. 14, 1869. La Fronge. Improved apparatus for carbureting air.
96,842. Nov. 16, 1869. Shaler. Improved apparatus for carbureting air.
103,432. Oct. 18, 1870. Bartholf. Improvement in apparatus for carbureting air and gases.
109,148. Nov. 8, 1870. Spang. Improvement in apparatus for carbureting air.
113,968. Apr. 25, 1871. Beers. Improvement in apparatus for carbureting air.
116,563. July 4, 1871. Coons. Improvement in carburetors for gas and air.
142,545. Sept. 2, 1871. Lockwood. Improvement in charburetors.
148,579. Mar. 17, 1874. Sloper. Improvement in apparatus for carbureting air and gas.
156,513. Nov. 3, 1874. Venner & Judy. Improvement in gas carburetors.
158,802. Jan. 19, 1875. Martin. Improvement in gas carbureting machines.
166,602. Aug. 10, 1875. Gearing. Improvement in carbureting apparatus.
168,797. Oct. 11, 1875. Snow. Improvement in carburetors.
169,034. Oct. 19, 1875. Pollard. Improvement in carburetors.
169,872. Nov. 9, 1875. Werni. Improvement in carbureting apparatus.
180,061. July 18, 1876. Pollard. Improvement in carburetors.
181,727. Aug. 29, 1876. Schmidt. Improvement in carburetors.
185,957. Jan. 2, 1877. Peacock & Bradley. Improvement in carburetors.
198,731. Dec. 25, 1877. Merritt. Improvement in carburetors.
203,505. May 7, 1878. Sloper. Improvement in carburetors.
203,702. May 14, 1878. Buell. Improvement in apparatus for carbureting air and gas.
207,983. Sept. 10, 1878. Reid. Improvement in carbureting apparatus.
209,076. Oct. 15, 1878. Reznor. Improvement in air carburetors.
209,351. Oct. 29, 1878. Merritt. Improvement in purifier and regulator for carburetors.
210,019. Nov. 19, 1878. Dougherty. Improvement in carburetors.
211,744. Jan. 28, 1879. Keller. Improvement in carburetors.
213,931. Apr. 1, 1879. Pew. Improvement in carbureting apparatus for air and gas.
219,705. Sept. 16, 1879. Fleming. Improvement in carburetors.
220,001. Sept. 23, 1879. Train. Improvement in gas carburetors.
221,948. Nov. 25, 1879. Wayland. Carburetor.
234,955. Nov. 30, 1880. Burrows. Carbureting apparatus.
236,159. Jan. 4, 1881. Howe & Miner. Apparatus for carbureting air.
241,419. May 10, 1881. Reynolds. Apparatus for obtaining an illuminating and heating gas.
246,601. Sept. 6, 1881. Copeland. Carbureting apparatus.
247,390. Sept. 30, 1881. Morey. Carburetor.
251,416. Dec. 27, 1881. Crowell. Carbureting apparatus.
253,202. Feb. 7, 1882. Haberstick. Carburetor.
256,741. Apr. 18, 1882. Reynolds. Gas-generating apparatus.
261,852. Aug. 1, 1882. Ives. Means for producing the oxyhydrogen blowpipe flame.
292,622. Jan. 29, 1884. Billings. Apparatus for producing gas.
304,507. Sept. 2, 1884. Dillenbeck. Gas machine.
397,631. Feb. 12, 1889. Carsley. Vaporizer.
398,225. Feb. 19, 1889. Bury & Bidelman. Carburetor.
420,591. Feb. 4, 1890. Dawson. Carburetor.
450,091. Apr. 7, 1891. Woolley. Vaporizer for gas engines.
476,709. June 7, 1892. Weaver. Carburetor and purifier.
486,442. Nov. 22, 1892. Enos. Carburetor.
493,992. Mar. 21, 1893. Fontaine. Apparatus for carbureting air.
566,415. Aug. 25, 1896. Schroeder. Carburetor.
590,640. Sept. 28, 1897. Byrne. Carburetor.
620,586. Mar. 7, 1899. Henderson. Carburetor.
650,276. May 22, 1900. Robinson. Carburetor.
660,125. Oct. 23, 1900. Schimdt. Carburetor.
663,699. Dec. 11, 1900. Latham. Carburetor.
669,317. Mar. 5, 1901. Brown. Carburetor.
709,866. Sept. 30, 1902. Bouchaud-Praceiq. Carburetor.
716,716. Dec. 23, 1902. Jenney. Gas generator.
720,485. Feb. 10, 1903. Robinson. Carburetor.
721,268. Feb. 24, 1903. Wolff. Carburetor.

763,074. June 21, 1904. Ruthven. Carburetor.
765,108. July 12, 1904. Soeder. Carburetor.
772,551. Oct. 18, 1904. Akeson. Carburetor.
774,486. Nov. 8, 1904. Marshall. Carburetor.
775,859. Nov. 22, 1904. Russell. Means for carbureting air.
782,619. Feb. 14, 1905. Mossig. Portable carburetor.
794,988. July 18, 1905. Houlon. Carburetor.
818,397. Apr. 17, 1906. Tresenreuter. Carburetor.
825,336. July 10, 1906. McCormick. Carburetor.
839,540. Dec. 25, 1906. Berg. Blowpipe apparatus.
843,028. Feb. 5, 1907. Mueller. Carburetor.
847,362. Mar. 19, 1907. Paris. Apparatus for manufacture of gas.
853,196. May 7, 1907. Akeson & Anderson. Carburetor.
856,654. June 11, 1907. McCormick & Miller. Carburetor.
860,334. July 16, 1907. Schell. Carburetor.
885,265. Apr. 21, 1908. Loewenstein. Carburetor.
888,190. May 19, 1908. Odell. Carburetor for hydrocarbon engines.
910,207. Jan. 19, 1909. Keep. Carburetor.
913,456. Feb. 23, 1909. Bertrand & Goubillon. Carburetor.
934,367. Sept. 14, 1909. Steel. Carburetor.
942,503. Dec. 7, 1909. Jacobs. Carburetor for hydrocarbon engines.
979,761. Dec. 27, 1910. Haywood. Carburetor.
985,122. Feb. 28, 1911. Ashmusen. Carburetor.
985,515. Feb. 28, 1911. Dorman. Carburetor.
1,025,553. May 7, 1912. Williams. Carburetor.
1,033,443. July 23, 1912. Morris & Merritt. Carburetor.
1,062,180. May 20, 1913. Meyers. Carburetor.
1,073,727. Sept. 23, 1913. Atwood. Carburetor.
1,076,309. Oct. 21, 1913. Patterson & Percival. Carburetor.
1,082,865. Dec. 30, 1913. Goodyear. Carburetor.
1,089,501. Mar. 10, 1914. Ruthven. Carburetor.
1,096,750. May 12, 1914. Pond. Carburetor.
1,097,039. May 19, 1914. Miller. Carburetor.
1,105,371. July 28, 1914. Omer. Carburetor.
1,146,625. July 13, 1915. Sanders. Carburetor.
1,152,915. Sept. 7, 1915. Huszár. Carburetor.
1,167,290. Jan. 4, 1915. Glover. Carburetor.
*1,190,124. July 4, 1916. Lukacsevics & Terrill. Carburetor.
*1,190,125. July 4, 1916. Lukacsevics. Carburetor.
*1,191,156. July 18, 1916. Ciglia & Pelletier. Suction intensifying carburetor.
*1,191,522. July 18, 1916. Lamb. Carburetor.
1,191,097. July 11, 1916. Spiers. Carburetor.
Re. 6,004 (orig. 142,545). Aug. 11, 1874. Lockwood. Carburetor.

Cross-reference patents, class 48, subclass 156.

57,639	138,715	210,717	427,197	688,931	846,679	1,004,661
65,296	143,534	222,822	429,426	697,807	852,780	1,009,121
66,068	150,827	242,379	488,454	706,482	854,604	1,024,501
67,216	167,150	249,160	522,418	712,803	860,334	1,060,545
73,900	169,423	288,868	538,791	768,063	886,403	1,069,068
81,590	Re. 6,878	308,693	541,441	772,678	913,857	1,075,598
87,556	176,156	312,512	548,689	788,427	933,064	1,076,401
89,536	176,395	336,574	596,658	793,776	951,779	1,104,560
Re. 3,779	191,789	340,221	598,893	810,087	964,165	1,105,160
110,005	192,399	378,647	628,222	813,796	973,240	1,173,469
115,182	193,911	403,377	635,456	817,592	982,490	
133,957	204,413	423,393	662,922	844,996	989,980	

SUBCLASS 157, CARBURETORS, CAPILLARY, SPIRAL PASSAGE.

15,829. Sept. 30, 1856. Varney. Hydrocarbon-vapor lamp.
20,534. June 15, 1858. Absterdam. Apparatus for manufacturing gas.
46,771. Mar. 14, 1865 Bassett. Improved apparatus for carbureting air.
84,021. Nov. 10, 1868. Thompson. Improved gas machine.
91,588. June 22, 1869. Alsop. Improved apparatus for manufacturing illuminating gas.

123,539. Feb. 6, 1872. Wilkinson. Improvement in carburetors.
126,189. Apr. 30, 1872. Cross. Improvement in carburetors.
149,766. Apr. 14, 1874. Palmer. Improvement in carburetors.
160,410. Mar. 2, 1875. Ferguson. Improvement in carburetors or hydrocarbon diffusers.
163,528. May 18, 1875. Reed. Improvement in gas carburetors.
172,074. Jan. 11, 1876. Barbarin & Roberts. Improvement in carburetors.
184,220. Nov. 7, 1876. De St. Aubin. Improvement in carburetors.
224,592. Feb. 17, 1880. Heywood & Boeklen. Carbureting apparatus.
238,020. Feb. 22, 1881. Anthony & Frost. Apparatus for producing illuminating gas or vapor.
238,886. Mar. 1, 1881. Guthrie. Carburetor.
261,011. July 11, 1882. Matthews & Holt. Gas machine.
286,865. Oct. 16, 1883. Taylor. Gas machine.
341,739. May 11, 1886. Fagan. Hydrocarbon-vapor stove.
375,055. Dec. 20, 1887. Dudley. Carburetor.
385,934. July 10, 1888. Ives. Caturator for the production of vapor blowpipe flames.
675,566. June 4, 1901. Lawrence. Carburetor.
699,965. May 13, 1902. Mangin. Carburetor.
780,673. Jan. 24, 1905. Lawrence. Carburetor.
798,418. Aug. 29, 1905. Johnson. Carburetor.
839,116. Dec. 25, 1906. Compton. Carburetor.
990,159. Apr. 18, 1911. Olsen. Carburetor.
Re. 3,124 (orig. 46,771). Sept. 15, 1863. Bassett. Improvement in apparatus for carbureting air or gases.

Cross-reference patents, class 48, subclass 157.

55,324	170,097	385,934	746,178	767,485	883,171	1,025,553
115,988	193,232	501,778	759,539	798,150	969,941	Re. 4,476
156,142	224,576					

SUBCLASS 158, CARBURETORS, CAPILLARY, VERTICAL SCREEN.

46,432. Feb. 14, 1865. Buckland. Improved apparatus for carbureting air.
48,706. July 11, 1865. Birchard. Improved apparatus for carbureting air.
49,705. Sept. 5, 1865. Boynton. Improved gaslight multiplier.
53,798. Apr. 10, 1866. Fairbanks. Improved apparatus for carbureting air.
55,778. June 19, 1866. Messenger. Improved apparatus for carbureting air, gas, etc.
57,686. Sept. 4, 1866. Divine. Improved apparatus for carbureting air.
57,729. Sept. 4, 1866. Johnston. Improved apparatus for carbureting gas.
57,812. Sept. 4, 1866. Worrall. Improved apparatus for carbureting gas.
58,209. Sept. 28, 1866. Boynton. Improved apparatus for carbureting gas.
58,861. Oct. 16, 1866. McGreary. Improved apparatus for carbureting air.
60,857. Jan. 1, 1867. Burridge. Improved apparatus for charging gas or air with hydrocarbon vapor.
61,309. Jan. 22, 1867. Boynton. Improved apparatus for carbureting gas and air.
69,621. Oct. 8, 1867. Boynton. Improved gaslight multiplier.
70,512. Nov. 5, 1867. Boynton. Improvement in carbureting gases and air.
78,185. May 26, 1868. Childs. Improved gas apparatus.
81,238. Aug. 18, 1868. Woodward. Improvement in apparatus for carbureting.
90,445. May 25, 1869. Groat. Improved gas machine.
100,274. Mar. 1, 1870. Dunderdale. Improved carburetor.
107,262. Sept. 13, 1870. Hyde. Improvement in apparatus for carbureting air and gas.
112,026. Feb. 21, 1871. Fisher. Improvement in apparatus for carbureting and generating gas.
127,409. June 4, 1872. Fisher. Improvement in carburetors.
128,356. June 25, 1872. Braun. Improvement in carburetors.
129,566. July 16, 1872. Hyde. Improvement in carburetors.
135,806. Feb. 11, 1873. Holmes. Improvement in carbureting apparatus.
147,244. Feb. 10, 1874. Davey & Griswold. Improvement in carburetors.

148,602. Mar. 17, 1874. Fisher & Darby. Improvement in carbureting apparatus.
156,820. Nov. 10, 1874. Reed. Improvement in gas carburetors.
164,423. June 15, 1875. Caldwell. Improvement in machines for manufacturing vapor gas.
172,144. Jan. 11, 1876. Meredith. Improvement in carburetors.
176,425. Apr. 25, 1876. Caldwell. Improvement in gas carburetors.
193,561. July 24, 1877. Sirê. Improvement in apparatus for carbureting gas.
205,201. June 25, 1878. Morehouse. Improvement in carburetors.
209,505. Oct. 29, 1878. Otten & Kluber. Improvement in apparatus for carbureting illuminating gas.
216,191. June 3, 1879. Keller. Improvement in gas carburetors.
219,590. Sept. 16, 1879. Morehouse. Improvement in carburetors.
220,695. Oct. 21, 1879. Bean. Improvement in carburetors.
223,490. Jan. 13, 1880. De Witt. Carburetors.
226,820. Apr. 20, 1880. Ferguson. Gas carburetor.
237,752. Feb. 15, 1881. Keller. Gas carburetor.
259,921. June 20, 1882. Reznor. Air carburetor.
268,910. Dec. 12, 1882. Lacy. Carburetor.
278,529. May 29, 1883. Frost. Apparatus for producing illuminating gas or vapor.
286,515. Oct. 9, 1883. Weston. Apparatus for increasing the illuminating power of gas.
300,757. June 24, 1884. Bois. Gas apparatus.
312,186. Feb. 10, 1885. Butler. Apparatus for carbureting air and gas.
354,574. Dec. 21, 1886. O'Connor. Carburetor.
359,585. Mar. 15, 1887. Weil. Carburetor.
366,664. July 19, 1887. Hickel. Gas carburetor.
382,819. May 15, 1888. Marks. Carburetor.
431,059. July 1, 1890. Keller. Carburetor.
440,486. Nov. 11, 1890. Love. Carburetor.
457,484. Aug. 11, 1891. Stringfellow. Apparatus for the manufacture of gas.
473,498. Apr. 26, 1892. Cruttenden. Carburetor.
499,635. June 13, 1893. Keller. Carburetor.
501,154. July 11, 1893. McCrory & Houze. Carburetor.
515,287. Feb. 20, 1894. Cabrié-Gardien. Carburetor.
522,574. July 3, 1894. Burrows. Carburetor.
522,968. July 17, 1894. Clarke & Griffen. Apparatus for carbureting air.
550,317. Nov. 26, 1895. Callahan. Carburetor.
589,094. Aug. 31, 1897. Ormerod. Carburetor.
590,893. Sept. 28, 1897. Ladd. Method of and apparatus for manufacturing gas.
620,496. Feb. 28, 1899. Ravenêz. Carburetor.
626,176. May 30, 1899. Logan. Carburetor.
633,287. Sept. 19, 1899. Lewis & Bailey. Carburetor.
661,697. Nov. 13, 1900. Jeffery. Carburetor.
666,483. Jan. 22, 1901. Wilkinson. Carburetor.
678,493. July 16, 1901. Jackson. Carburetor.
680,941. Aug. 20, 1901. Sargent. Carburetor.
699,357. May 6, 1902. Wilkinson et al. Carburetor.
717,444. Dec. 30, 1902. Nagel. Carburetor.
725,148. Apr. 14, 1903. Ruthven. Carburetor.
726,671. Apr. 28, 1903. Gemmer. Vaporizer for explosive engines.
750,311. Jan. 26, 1904. Severance. Carburetor.
765,351. July 19, 1904. Avery & Smith. Carburetor.
773,632. Nov. 1, 1904. Severance. Carburetor.
777,220. Dec. 13, 1904. Patee. Carburetor for explosive engines.
778,686. Dec. 27, 1904. Loewenstein. Carburetor.
783,648. Feb. 28, 1905. Severance et al. Carburetor.
796,557. Aug. 8, 1905. Bockoven. Carburetor.
801,044. Oct. 3, 1905. Parsons. Carburetor for hydrocarbon engines.
820,036. May 8, 1906. Burch. Carburetor.
827,648. July 31, 1906. Lawrence. Carburetor.
832,547. Oct. 2, 1906. Hooper. Carburetor.
848,112. Feb. 5, 1907. Severance. Carburetor.
863,154. Aug. 13, 1907. Cox. Carburetor.

887,017. May 5, 1908. Puddington. Carburetor.
982,490. Jan. 24, 1911. Haywood. Carburetor.
1,011,244. Dec. 12, 1911. Puddington. Carburetor.
1,046,653. Dec. 10, 1912. Ruthven. Carburetor.
1,063,900. June 3, 1913. Whitacre. Carburetor.
1,065,381. June 17, 1913. Rubesky. Carburetor.
1,070,514. Aug. 19, 1913. Myers. Carburetor.
1,093,718. Apr. 21, 1914. Myers. Carburetor.
1,104,427. July 21, 1914. Kendall. Apparatus for carbureting air.
1,116,861. Nov. 10, 1914. Wilson. Carburetor.
1,157,588. Oct. 19, 1915. Rubesky. Carburetor.
Re. 2,375 (48,705). Oct. 16, 1866. Boynton. Improvement in apparatus for carbureting gas.
Re. 2,376 (58,209). Oct. 16, 1866. Boynton. Improved apparatus for carbureting gas.

Cross-reference patents, class 48, subclass 158.

31,720	115,798	177,909	207,886	451,036	692,518	951,779
35,984	128,321	190,673	226,875	509,174	734,772	979,761
45,729	132,132	191,881	252,307	528,882	779,006	994,085
46,770	133,118	192,825	278,281	563,790	832,830	1,039,471
48,391	140,998	193,934	303,927	595,658	843,554	
54,182	163,535	197,944	336,572	623,725	857,130	
107,743	177,191	206,999	424,654	626,193	855,407	

SUBCLASS 159, CARBURETORS, CAPILLARY, ZIGZAG PASSAGE.

26,458. Dec. 13, 1859. Bronson. Hydrocarbon-vapor apparatus.
49,596. Aug. 22, 1865. Mille. Improved apparatus for carbureting air.
56,503. July 17, 1866. Wright. Improved apparatus for carbureting gas.
60,417. Dec. 11, 1866. Pickering. Improved apparatus for charging air with gasoline.
83,730. Nov. 3, 1868. Richard. Improved apparatus for carbureting air.
84,814. Dec. 8, 1868. Foster & Ganster. Improved apparatus for illuminating railroad cars, steamers, etc.
92,635. July 13, 1869. Nichols. Improved carburetor for air and gas.
106,389. Aug. 16, 1870. Millward. Improvement in carbureting apparatus.
114,588. May 2, 1871. Simonds. Gas machine.
126,024. Apr. 23, 1872. Coleman. Improvement in gas carburetors.
131,157. Sept. 10, 1872. Fell. Improvement in carbureting illuminating gas.
143,426. Oct. 7, 1873. Sloper. Improvement in portable gas machines.
145,248. Dec. 2, 1873. Simmons. Improvement in carburetors.
151,625. June 2, 1874. Ruthven. Improvement in carburetors.
167,592. Sept. 7, 1875. Westcott. Improvement in carburetors.
181,666. Aug. 29, 1876. Geisenberger. Improvement in carburetors.
203,371. May 7, 1878. Reed. Improvement in carburetors.
203,458. May 7, 1878. Hughes. Improvement in carburetors.
214,711. Apr. 22, 1879. Ruthven. Improvement in carburetors and regulators.
229,346. June 29, 1880. Westinghouse. Carburetor.
231,635. Aug. 24, 1880. West. Apparatus for carbureting air or gases for illuminating purposes.
281,108. July 10, 1883. Mills. Carburetor.
312,836. Feb. 24, 1885. Frost. Carburetor.
315,747. Apr. 14, 1885. Detwiler. Gas generator.
328,359. Oct. 13, 1885. Stubbers. Automatic gas machine.
341,299. May 4, 1886. Wolford. Carburetor.
356,337. Jan. 18, 1887. Stanour. Carburetor.
359,646. Mar. 22, 1887. Sumerwell. Carburetor.
366,168. July 5, 1887. Huber. Gas-generating machine.
427,487. May 6, 1890. Tibbets. Carburetor.
683,401. Sept. 24, 1901. Houze. Carburetor.
710,380. Sept. 30, 1902. Marks. Carburetor for explosive engines.
712,169. Oct. 28, 1902. Wright. Carburetor.
730,627. June 9, 1903. Esser. Carburetor.
756,381. Apr. 5, 1904. Lawrence. Carburetor.
773,679. Nov. 1, 1904. Sale & Hoag. Carburetor.

783,790. Feb. 28, 1905. Kline. Gas-enriching machine.
817,218. Apr. 10, 1906. Brown. Carburetor.
818,207. Apr. 17, 1906. Verret & Palmer. Carburetor.
838,719. Dec. 18, 1906. Kelley. Carburetor.
964,165. July 12, 1910. Kelley. Carburetor.
975,635. Nov. 15, 1910. Potthast. Carburetor.
1,050,322. Jan. 14, 1913. Woodworth. Carburetor.
1,075,396. Oct. 14, 1913. Boatwright. Oil burner.
1,106,070. Aug. 4, 1914. Andres. Carburetor.
1,164,215. Dec. 14, 1915. Rodrigues & Schmitt. Carburetor.

Cross-reference patents, class 48, subclass 159.

131,815	221,680	353,499	725,148	773,682	820,036	959,350
154,475	291,676	395,152	763,965	780,355	820,554	944,482
164,360	327,981	423,367	765,351	783,648	863,154	1,070,514
168,048	336,378	540,536	787,782	807,131	885,832	1,075,598
Re. 6,865						

SUBCLASS 160, CARBURETORS, GRAVITY.

50,250. Oct. 3, 1865. Irwin. Improved apparatus for carbureting air.
51,841. Jan. 2, 1866. Loveless. Improved apparatus for carbureting air.
52,946. Feb. 27, 1866. Chamberlin. Improved apparatus for carbureting gas for illuminating.
55,950. June 26, 1866. Brown. Improved apparatus for carbureting air.
66,071. June 25, 1867. Bassett. Improvement in the manufacture of illuminating gas.
83,026. Oct. 13, 1868. Bassett. Improvement in gas generators.
177,909. May. 26, 1876. Williams. Improvement in gas-making apparatus.
397,255. Feb. 5, 1889. Stubbers. Gasoline apparatus for illuminating and heating purposes.
421,834. Feb. 18, 1890. Hollingsworth. Apparatus for vaporizing liquid hydrocarbon and supplying the vapors to burners.
448,652. Mar. 24, 1891. Hollingsworth. Vapor stove.
451,050. Apr. 28, 1891. Hollingsworth. Starter for vapor stoves.
454,014. June 9, 1891. Marsh. Vapor stove.
456,510. July 21, 1891. Davis. Apparatus for vaporizing and feeding hydrocarbon.
470,756. Mar. 15, 1892. Hollingsworth. Vapor stove.
471,289. Mar. 22, 1892. Hollingsworth. Vapor stove.
479,315. July 19, 1892. Stockstrom. Vapor stove.
480,281. Aug. 9, 1892. Ruppel. Vapor stove.
483,031. Sept. 20, 1892. Flick. Vapor stove.
489,477. Jan. 10, 1893. Hollingsworth. Vapor stove.
490,085. Jan. 17, 1893. Romoser. Vapor stove.
490,655. Jan. 31, 1893. Hollingsworth. Vapor stove.
490,656. Jan. 31, 1893. Hollingsworth. Vapor stove.
493,186. Mar. 7, 1893. Sayers. Gasoline-burner attachment.
525,331. Sept. 4, 1894. Campany. Vapor burner.
525,350. Sept. 4, 1894. Lindemann. Vapor-burning apparatus.
528,795. Nov. 6, 1894. Palmer & Munro. Gasoline stove.
541,530. June 25, 1895. Goergen. New-process vapor burner.
555,436. Feb. 25, 1896. Davis. Evaporator burner or stove.
555,450. Feb. 25, 1896. Johnson. Vapor stove.
570,482. Nov. 3, 1896. Hutchins. Gasoline stove.
608,388. Aug. 2, 1898. Brown. Gasoline stove.
640,832. Jan. 9, 1900. Thayer. Carburetor.
720,968. Feb. 17, 1903. Rife & Carper. Carburetor.
739,144. Sept. 15, 1903. Blackford. Gasoline burner.
834,614. Oct. 30, 1906. Gray. Carburetor.
944,070. Dec. 21, 1909. Best. Hydrocarbon burner.
952,412. Mar. 15, 1910. Blackford. Gasoline burner.

Cross-reference patents, class 48, subclass 160.

47,257	187,415	490,415	807,131

SUBCLASS 163, CARBURETORS, OSMOTIC.

236,433. Jan. 11, 1881. Hoard. Carburetor.
291,128. Jan. 1, 1884. Baker. Carburetor.
533,275. Jan. 29, 1895. Collet & Merichenski. Carburetor.
625,084. May 16, 1899. Brown & Dixon. Carburetor.
671,052. Apr. 2, 1901. Kurz. Carburetor.

SUBCLASS 164, CARBURETORS, PIVOTED.

66,068. June 25, 1867. Bassett. Improvement in carbureting gases.
78,600. June 2, 1868. Malcolm. Improved apparatus for generating gas.
169,423. Nov. 2, 1875. Covel. Process and apparatus for enriching gas or air with a definite and regulated percentage of hydrocarbon vapor.
188,667. Mar. 20, 1877. Pierce & Smiley. Carburetor.
191,789. June 12, 1877. Winn. Improvement in gas and air carburetors.
192,899. June 26, 1877. Winn. Improvement in gas and air carburetors.
204,413. May 28, 1878. Dusenberry & Winn. Improvement in gas and air carburetors.
294,863. Mar. 11, 1884. Gairing & Lehmann. Carburetor.
Re. 6,878. Jan. 25, 1876. Covel. Improvement in processes and apparatus for manufacturing illuminating gas.

SUBCLASS 165, CARBURETORS, PIVOTED, REVOLVING.

12,535. Mar. 13, 1855. Cuningham. Benzole vapor apparatus.
13,010. June 5, 1855. McDougall. Hydrocarbon-vapor apparatus.
35,144. May 6, 1862. Drake. Improved apparatus for carbureting air.
43,264. June 21, 1864. Simonds. Improved apparatus for carbonizing air for illuminating purposes.
44,060. Sept. 6, 1864. Archer. Improvement in apparatus for carbureting air.
44,560. Oct. 4, 1864. Simonds. Improved apparatus for carbonizing air for illuminating purposes.
50,076. Sept. 19, 1865. McAvoy. Improved apparatus for carbureting air.
50,103. Sept. 26, 1865. Drennan. Improved apparatus for carbureting air.
50,675. Oct. 31, 1865. Bassett. Improved apparatus for carbureting air.
50,905. Nov. 14, 1865. Chase. Improved apparatus for carbureting air.
50,987. Nov. 14, 1865. Chase. Improved apparatus for carbureting air.
51,946. Jan. 9, 1866. Hutchinson & McAvoy. Improved apparatus for carbureting air.
52,087. Jan. 9, 1866. Spence. Improved apparatus for carbureting air.
53,504. Mar. 27, 1866. Thompson. Improved apparatus for carbureting air.
57,164. Aug. 14, 1866. McAvoy. Improved apparatus for carbureting air.
57,442. Aug. 21, 1866. McDonald. Improved apparatus for carbureting air.
57,543. Aug. 28, 1866. Mihan. Improved apparatus for carbureting air.
57,788. Sept. 4, 1866. Spence. Improved apparatus for carbureting air.
61,789. Feb. 5, 1867. Hutchinson & McAvoy. Improved apparatus for carbureting air.
61,887. Feb. 5, 1867. Spence. Improved gas apparatus.
63,667. Apr. 9, 1867. Stevens. Improved machine for carbureting air to produce inflammable gas.
64,382. Apr. 30, 1867. Thompson. Improved gas generator and carburetor.
76,114. Mar. 31, 1868. Stratton. Improved apparatus for carbureting air.
76,182. Mar. 31, 1868. Ganster. Improved apparatus for generating illuminating gas.
78,870. June 16, 1868. Ganster. Improvement in the manufacture of illuminating gas.
81,232. Aug. 18, 1868. Van der Weyde. Improved apparatus for the manufacture of illuminating gas.
81,736. Sept. 1, 1868. Bassett. Improved process and materials for carbureting gases.
82,786. Oct. 6, 1868. Bancroft. Improved gas machine.
84,941. Dec. 15, 1868. Foster & Ganster. Improved portable gas apparatus.
85,104. Dec. 22, 1868. Lawler & Gibson. Improved gas machine.
87,299. Feb. 23, 1869. Schwippel. Improved machine for making gas from volatile oils.
90,259. May 18, 1869. Hare. Improved gas machine.

97,284. Nov. 30, 1869. Dunderdale. Improved apparatus for producing illuminating gas.
100,080. Feb. 22, 1870. Snodgrass. Improved portable gas generator.
103,036. May 17, 1870. Fogarty. Improved gas generator.
104,126. June 14, 1870. Douglas. Improved hydrocarbon vapor machine for illuminating purposes.
108,937. Nov. 1, 1870. Richard. Improvement in gas apparatus.
109,568. Nov. 22, 1870. Van Houten. Improvement in gas machine.
120,824. Nov. 14, 1871. McMillen. Improvement in gas machines.
132,025. Oct. 8, 1872. Rigod. Improvement in carburetors.
185,020. Jan. 21, 1878. Van Houten. Improvement in machines for carbureting air.
151,392. May 26, 1874. Horning. Improvement in carburetors.
165,564. July 13, 1875. Gray & Lusby. Improvement in air carburetors.
166,427. Aug. 3, 1875. Stombs. Improvement in automatic rotary carburetors.
167,811. Sept. 14, 1875. Westcott. Improvement in carburetors.
169,105. Oct. 26, 1875. Hyams. Improvement in carburetors.
182,593. Sept. 26, 1876. Pierce. Improvement in carburetors.
187,667. Feb. 20, 1877. Paquette. Improvement in carburetors.
196,946. Nov. 6, 1877. Stratton. Improvement in carburetors.
198,270. Dec. 18, 1877. Bossert. Improvement in carburetors.
216,879. June 24, 1879. Moffatt. Improvement in air-carbureting apparatus.
223,582. Jan. 13, 1880. Dewitt. Carburetor.
226,581. Apr. 13, 1880. Wright. Carburetor.
244,387. July 19, 1881. Hoard & Wiggin. Apparatus for carbureting gas or air.
249,163. Nov. 8, 1881. De Witt. Rotary carburetor.
251,329. Dec. 20, 1881. Winn. Carburetor cylinder for air-gas machines.
262,651. Aug. 15, 1882. De Witt. Carburetor.
262,991. Aug. 22, 1882. Smith et al. Carburetor.
264,406. Sept. 12, 1882. Frail. Carbureting apparatus.
272,002. Feb. 6, 1883. Vigreux. Apparatus for producing currents of pure or carbureted air.
321,959. July 14, 1885. Frail. Gas machine.
329,664. Nov. 3, 1885. McNett. Carburetor.
350,882. Oct. 5, 1885. Merritt. Carburetor.
356,071. Jan. 11, 1887. Hyams. Apparatus for treatment of natural gas.
356,950. Feb. 1, 1887. McNett. Carburetor.
360,240. Mar. 29, 1887. Ordonez y Ponce. Gas generator.
395,616. Jan. 1, 1889. Dykes. Carburetor.
531,780. Jan. 1, 1895. Cook. Carburetor.
539,773. May 21, 1895. Lawrence. Carburetor.
593,284. Nov. 9, 1897. Spacke. Carbureter.
596,321. Dec. 28, 1897. Bulley. Gas-generating machine.
604,948. May 31, 1898. Van Vriesland. Carburetor.
618,002. Jan. 17, 1899. Bradley. Carburetor.
631,002. Aug. 15, 1899. Van Vriesland. Carburetor.
649,865. May 15, 1900. Herhagen & Van Gink. Carburetor.
672,507. Apr. 23, 1901. Johnson. Carburetor.
688,408. Dec. 10, 1901. Göhler. Carburetor.
696,187. Mar. 22, 1902. Page & Wood. Oil atomizer and mixer for vapor engines.
711,429. Oct. 14, 1902. Leckband. Carburetor.
748,085. Nov. 8, 1903. Kahle. Carbureting apparatus.
779,906. Jan. 10, 1905. Burch. Carburetor.
801,606. Oct. 10, 1905. Picard. Carbureted-air machine.
866,115. Sept. 17, 1907. Dock. Vaporizer.
885,905. Apr. 28, 1908. Averell. Carburetor.
901,237. Oct. 13, 1908. Graumüller. Carburetor.
934,981. Sept. 21, 1909. Munger. Carburetor.
942,181. Dec. 7, 1909. McGuire & Hammick. Carburetor.
969,941. Sept. 13, 1910. Cox. Carburetor.
1,009,629. Nov. 21, 1911. Bardill. Carburetor.
1,144,477. June 29, 1913. Kellogg. Carburetor.
1,156,716. Oct. 12, 1915. Shores. Carburetor.

Re. 1,819 (9,967). Aug. 30, 1853. Drake. Benzol-vapor apparatus.
Re. 2,069 (45,456). Sept. 5, 1864. McAvoy & Hutchinson. Improved apparatus for carbureting air.

Cross-reference patents, class 48, subclass 165.

56,116	82,244	153,876	692,860	840,708	1,123,876	1,137,535
57,940	138,409	189,400	754,774	1,064,273	1,137,238	

SUBCLASS 166, CARBURETORS, SUBMERGED BLAST.

43,948. Aug. 23, 1864. McAvoy. Improvement in apparatus for carbureting air.
45,206. Nov. 22, 1864. McAvoy. Improved apparatus for carbureting air.
45,568. Dec. 20, 1864. Stevens. Improved apparatus for vaporizing and aerating volatile hydrocarbon.
46,280. Feb. 7, 1865. Terry. Improved apparatus for carbureting air.
47,272. Apr. 18, 1865. Bassett. Improved apparatus for carbureting air.
47,679. May 9, 1865. Dunscomb. Improved apparatus for carbureting air.
51,128. Nov. 28, 1865. Bickford. Improved apparatus for carbureting air.
52,876. Feb. 27, 1866. Myer. Improved machine for charging air with hydrocarbon vapors.
53,843. Apr. 10, 1866. Loveless. Improved apparatus for carbureting air.
57,738. Sept. 4, 1866. Lipps. Improved barrel for petroleum, etc.
58,471. Oct. 2, 1866. Patterson. Improved apparatus for carbureting air, etc.
58,727. Oct. 9, 1866. Hutchinson. Improved apparatus for generating steam.
59,446. Nov. 6, 1866. Pease. Improvement in carburetors.
62,363. Feb. 26, 1867. Rand. Improvement in the manufacture of illuminating gas.
62,364. Feb. 26, 1867. Rand. Improvement in apparatus for carbureting air.
66,041. June 25, 1867. Rand. Improved method of making illuminating gas.
66,749. July 16, 1867. Springer & McDonald. Improved apparatus for carbureting air.
67,971. Aug. 20, 1867. Fraser. Improved carbureting apparatus.
74,182. Feb. 4, 1868. Prichard. Improvement in gas machines.
75,468. Mar. 10, 1868. Sangster. Improvement in machines for carbureting air.
75,469. Mar. 10, 1868. Sangster. Improved machine for carbureting air.
79,048. June 28, 1868. Appleby. Improved carburetor.
79,290. June 28, 1868. Willoughby. Improved carburetor.
80,404. July 28, 1868. Graham. Improved gas machine.
83,344. Oct. 20, 1868. Wain. Improved gas machine.
83,419. Oct. 27, 1868. Stebbins. Improved portable gas apparatus.
84,283. Nov. 24, 1868. Kitchen. Improved portable gas apparatus.
90,012. May 11, 1869. Mix. Improved carburetor.
95,412. Oct. 5, 1869. Barbarin. Improved apparatus for carbureting air and gas.
96,074. Oct. 26, 1869. Barbarin. Improved apparatus for carbureting air.
97,285. Nov. 30, 1869. Eberts & Fanning. Improved gas machine for carbureting air.
98,462. Jan. 4, 1870. Ball. Improved gas machine.
128,199. June 18, 1872. Gearing. Improvement in apparatus for the manufacture of gas from oils.
146,082. Dec. 30, 1873. Lyman. Improvement in carburetors.
150,449. May 5, 1874. Wheeler. Improvement in gas machines or carburetors.
155,096. Sept. 15, 1874. McHenry. Improvement in carburetors.
155,155. Sept. 22, 1874. Harrington. Improvement in carburetors.
157,781. Dec. 15, 1874. Bean. Improvement in carbureters for gas and air.
157,861. Dec. 15, 1874. Needles. Improvement in air-carbureting gas machines.
164,558. June 15, 1875. Henderson. Improvement in carburetors.
165,050. June 29, 1875. Allen. Improvement in carburetors.
165,862. July 20, 1875. Pierce. Improvement in carburetors.
166,508. Aug. 10, 1875. Daschbach. Improvement in carburetors.
173,933. Feb. 22, 1876. Forbes. Improvement in carburetors.
174,054. Feb. 29, 1876. Allen. Improvement in carburetors.

180,359. July 25, 1876. McMillen & Minor. Improvement in carburetors.
181,926. Sept. 5, 1876. Edgar. Improvement in carburetors.
193,007. July 10, 1877. Lamb. Apparatus for carbureting air.
194,733. Aug. 28, 1877. Shepard. Improvement in carburetors.
199,246. Jan. 15, 1878. Wolle & Munyon. Improvement in apparatus for carbureting air.
203,579. May 14, 1878. Battey. Improvement in carburetors.
261,507. July 18, 1882. Wittamer. Apparatus for the manufacture of illuminating gas.
273,852. Mar. 13, 1883. Judd. Gas machine.
280,201. June 26, 1883. Martin. Apparatus for the manufacture of air gas.
298,058. May 6, 1884. Beebe. Carburetor.
302,450. July 22, 1884. Valentine. Apparatus for carbureting and firing furnaces.
307,042. Oct. 21, 1884. Herzog. Process of and apparatus for obtaining illuminating gas.
327,981. Oct. 13, 1885. Andrus. Carburetor.
339,177. Apr. 6, 1886. Herlehy & McGinnis. Natural-gas carburetor.
362,234. May 3, 1887. Stauber. Gas machine.
376,248. Jan. 10, 1888. Lothammer. Carburetor.
377,607. Feb. 7, 1888. Foster. Carburetor.
382,585. May 8, 1888. Benz. Carburetor.
414,370. Nov. 5, 1889. Blackmore. Tinner's soldering apparatus.
415,978. Nov. 26, 1889. Regan. Carburetor for gas engines.
437,454. Sept. 30, 1890. Ranney. Carburetor.
474,838. May 17, 1892. Lambert. Carburetor.
484,949. Oct. 25, 1892. Clingman. Carburetor.
488,881. Dec. 27, 1892. Falley. Carburetor.
490,972. Jan. 31, 1893. Love. Apparatus for carbureting gas or air.
493,165. Mar. 7, 1893. Irgens. Apparatus for carbureting air.
504,137. Aug. 29, 1893. Savill. Carburetor.
505,700. Sept. 26, 1893. Cornish. Process of and apparatus for carbureting air.
511,950. Jan. 2, 1894. Hibbs. Process of and apparatus for carbureting air.
527,085. Oct. 9, 1894. Sprague & Guthrie. Carburetor.
527,639. Oct. 16, 1894. Westcott. Carburetor.
544,945. Aug. 20, 1895. Aldrich. Apparatus for carbureting air.
559,341. Apr. 28, 1896. Parr & Avery. Carburetor.
568,672. Sept. 29, 1896. Garred. Machine for generating gas.
569,198. Oct. 13, 1896. Henlein. Incandescent oil lighting.
569,460. Oct. 13, 1896. Ingraham. Carburetor.
572,837. Dec. 8, 1896. Staede. Carburetor.
575,595. Jan. 19, 1897. Cornish. Carburetor.
578,347. Mar. 9, 1897. Mitchell. Gas-generating machine.
588,200. Aug. 17, 1897. Van Syke. Blowpipe.
592,579. Oct. 26, 1897. Balkam. Carburetor.
593,682. Nov. 16, 1897. Oliver. Gas machine.
598,393. Feb. 1, 1898. Sams. Gas generator.
600,221. Mar. 8, 1898. Grey. Apparatus for making gas.
607,417. July 19, 1898. Bailey. Process of and apparatus for treating crude oil in manufacturing gas and lubricating oil.
610,159. Aug. 30, 1898. Speer. Carburetor.
615,098. Nov. 29, 1898. McIntyre. Internal separator.
619,281. Feb. 14, 1899. Cornish. Carburetor.
620,595. Mar. 7, 1899. Lippitt. Carburetor.
620,646. Mar. 7, 1899. Filley. Carburetor.
628,639. July 11, 1899. Steele. Carburetor.
639,481. Dec. 19, 1899. Wopert. Carburetor.
643,206. Feb. 13, 1900. Russell. Carburetor.
645,485. Mar. 13, 1900. McAllister. Carburetor.
654,378. July 24, 1900. Barckdall. Carburetor.
656,409. Aug. 21, 1900. Laraway & Houser. Carburetor.
659,987. Oct. 16, 1900. Ray. Carburetor for explosive engines.
662,304. Nov. 20, 1900. Reenstierna. Carburetor.
664,457. Dec. 25, 1900. Bennett. Carburetor.
671,042. Apr. 2, 1901. Barckdall & Woodward. Carburetor.

673,798. May 7, 1901. Kempshall. Carburetor.
673,799. May 7, 1901. Reenstierna. Carburetor.
676,054. June 11, 1901. Thomas. Carburetor.
677,305. June 25, 1901. Arnold. Carburetor.
679,019. July 23, 1901. Fischer. Carburetor.
688,814. Dec. 17, 1901. Andreson. Carburetor.
698,953. Apr. 29, 1902. Honts. Carburetor.
704,034. July 8, 1902. Head & Dovey. Carburetor.
707,973. Aug. 26, 1902. Leckband. Carburetor.
710,646. Oct. 7, 1902. Williams. Carburetor.
718,361. Jan. 13, 1903. Leckband. Apparatus for carbureting air.
723,487. Mar. 24, 1903. Richards. Carbureting device for explosive engines.
725,366. Apr. 14, 1903. Renstrom. Acetylene-gas generator.
749,315. Jan. 12, 1904. Mooers. Carbureting device for explosive engines.
750,433. Jan. 26, 1904. Cornish. Carburetor.
755,167. Mar. 22, 1904. Philipps. Carburetor.
757,935. Apr. 19, 1904. Lockhart. Carburetor.
777,908. Dec. 20, 1904. Lothammer. Carburetor.
781,701. Feb. 7, 1905. Walther. Carburetor.
782,788. Feb. 14, 1905. Mohr. Carburetor.
793,786. July 4, 1905. Helmle. Carburetor.
805,138. Nov. 21, 1905. Herrick & Lohrman. Carburetor.
812,753. Feb. 13, 1906. Kouns. Carburetor for hydrocarbon engines.
817,218. Apr. 10, 1906. Brown. Carburetor.
823,882. June 12, 1906. Akeson. Carburetor.
826,936. July 24, 1906. Hinds. Carburetor.
829,375. Aug. 21, 1906. Garvey. Air carburetor.
840,115. Jan. 1, 1907. Dawson. Gas generator.
862,196. Aug. 6, 1907. Peregrine. Carburetor.
913,733. Mar. 2, 1909. Kenworthy. Gas generator.
920,511. May 4, 1909. Wood. Carburetor.
932,478. Aug. 31, 1909. Laux. Carburetor.
932,871. Aug. 31, 1909. Kenworthy. Carburetor.
938,011. Oct. 26, 1909. Miéville. Carburetor.
947,357. Jan. 25, 1910. Steward. Carburetor.
950,825. Mar. 1, 1910. Pill. Carbureting apparatus.
951,501. Mar. 8, 1910. Hancock & Arnold. Gas generator.
956,048. Apr. 26, 1910. Dawson. Carbureting apparatus.
965,867. Aug. 2, 1910. Bustard. Carburetor.
988,398. Apr. 4, 1911. Stein. Carburetor.
989,848. Apr. 18, 1911. Kemp. Carburetor.
989,980. Apr. 18, 1911. Kemp. Carburetor.
994,574. June 6, 1911. Cox. Carburetor.
995,882. June 20, 1911. Lowry. Hydrocarbon lighting system.
1,002,791. Sept. 5, 1911. Voigt. Carburetor.
1,004,329. Sept. 26, 1911. Winter. Carbureting apparatus.
1,009,121. Nov. 21, 1911. Weiwoda. Carburetor.
1,027,340. May 21, 1912. Johnston. Carburetor.
1,027,456. May 28, 1912. Wood. Carburetor.
1,043,691. Nov. 5, 1912. Grandjean. Carburetor.
1,057,254. Mar. 25, 1913. McAndrews. Carburetor.
1,058,407. Apr. 8, 1913. Candlish. Carburetor.
1,069,068. July 29, 1913. Kemp. Carbureter.
1,069,885. Aug. 5, 1913. Johnson. Carburetor.
1,070,394. Aug. 19, 1913. Booth. Carburetor.
1,103,789. July 14, 1914. Macey. Carburetor.
1,105,160. July 28, 1914. Sanders. Carburetor.
1,109,777. Sept. 8, 1914. Müller. Carburetor.
1,156,924. Oct. 19, 1915. Nichols. Carburetor.
Re. 3,892 (95,412). Mar. 22, 1870. Barbarin. Improvement in apparatus for carbureting air and gas.
Re. 6,376 (67,971). Apr. 13, 1875. Fraser. Improvement in carbureting apparatus.
Re. 6,431 (51,128). May 18, 1875. Bickford. Improvement in apparatus for carbureting air.
Re. 13,498. Dec. 17, 1912. Bustard. Carburetor.
1,191,097. July 11, 1916. Spiers. Carbuetor.

Cross-reference patents, class 48, subclass 166.

8,433	107,853	188,667	512,270	646,320	706,454	906,548
32,222	110,946	221,942	515,440	654,636	707,467	912,468
38,357	116,563	233,978	518,582	657,770	707,897	929,135
42,469	117,998	306,485	522,418	658,020	716,227	931,386
55,395	125,194	307,132	Re. 11,430	659,476	745,489	941,393
57,551	127,031	311,493	554,630	663,683	749,768	953,606
63,511	130,164	324,177	566,413	673,365	762,477	940,916
66,545	138,160	356,477	566,415	674,812	772,551	947,639
66,777	142,545	360,944	576,499	679,018	784,599	951,590
67,216	150,827	370,936	586,923	688,776	817,218	1,005,491
76,535	151,557	403,839	603,431	689,460	828,334	1,014,133
78,600	156,463	411,809	607,888	690,303	836,795	1,044,594
80,268	164,825	422,322	607,889	690,681	844,995	1,062,278
82,359	167,170	435,856	613,167	692,255	853,196	1,065,819
96,073	175,827	457,803	625,294	697,807	860,522	1,091,784
97,283	176,955	484,721	629,246	702,637	871,480	1,095,510
105,190	178,973	493,992	639,336	705,021	887,017	1,107,489

SUBCLASS 167, CARBURETORS, SUBMERGED BLAST, COIL.

50,029. Sept. 29, 1865. Pond & Richardson. Improved apparatus for carbureting air.
114,316. May 2, 1871. Marks. Improvement in carburetors for air and gas.
200,568. Feb. 19, 1878. Reed. Improvement in carburetors.
290,491. Dec. 18, 1883. Snell. Means for facilitating the passage of oil through pipes and making illuminating gas.
308,796. Dec. 2, 1884. Ransom. Gas machine.
314,412. Mar. 24, 1885. Allender. Hydrocarbon-gas machine.
451,218. Apr. 28, 1891. Bradley. Grass burner for railway tracks
502,781. Aug. 8, 1893. Smith. Carburetor.
615,100. Nov. 29, 1898. Parrott. Carburetor.
632,376. Sept. 5, 1899. Stanley. Carburetor.
762,271. June 14, 1904. Bennett & Moorwood. Carburetor for motor cars.
773,322. Oct. 25, 1904. Hinman. Carburetor.
848,933. Apr. 2, 1907. Thiem. Carburetor.
865,060. Sept. 3, 1907. Rockwell. Carburetor.
895,273. Aug. 4, 1908. Keitel. Carbureting apparatus.

Cross-reference patents, class 48, subclass 167.

53,481	168,290	275,268	622,489	640,695	795,283	1,002,791
67,576	272,848	596,536				

SUBCLASS 168, CARBURETORS, SURFACE.

24,200. May 31, 1859. Covel. Hydrocarbon-vapor apparatus.
27,470. Mar. 18, 1860. Pease. Hydrocarbon-vapor apparatus.
46,802. Feb. 7, 1865. McAvoy. Improved apparatus for carbureting air.
47,256. Apr. 11, 1865. Irwin. Improved apparatus for carbureting air.
47,550. May 2, 1865. Hurd. Improved apparatus for carbureting air.
53,979. Apr. 17, 1866. Hogan. Improved apparatus for carbureting gas.
58,559. Oct. 2, 1866. Stevens. Improved apparatus for carbureting air.
61,004. Jan. 8, 1867. Gilbert et al. Improvement in apparatus for carbureting air.
61,656. Jan. 20, 1867. Douglas & Walton. Improved apparatus for carbureting air.
64,156. Apr. 23, 1867. Simonds. Improved apparatus for carbureting air.
69,037. Sept. 17, 1867. Spence. Improved hydrocarbon-vapor machine.
70,809. Nov. 12, 1867. Cozzens & Jones. Improved apparatus for carbureting air.
89,665. May 5, 1869. H. Johnson. Improved apparatus for carbureting air or gas.
91,213. June 15, 1869. Covel. Improved carburetor.
93,288. Aug. 3, 1869. Dyer. Improved gas carburetor.

96,364. Nov. 2, 1869. Tiffany. Improved apparatus for carbureting and applying air for lighting and heating.
99,274. Jan. 25, 1870. Spence & Towsley. Improved apparatus for carbureting air.
105,378. July 12, 1870. Simonds. Improvement in carbureting apparatus.
105,994. Aug. 2, 1870. Spence. Improvement in apparatus for carbureting air.
114,709. May 9, 1871. Rex. Improvement in apparatus for carbureting air.
114,787. May 16, 1871. Fitts. Improvement in apparatus for carbureting air.
125,085. Mar. 26, 1872. Reznor. Improved apparatus for carbureting air.
151,153. May 19, 1874. Palmer. Improvement in carburetors.
160,799. Mar. 16, 1875. Vougt. Improvement in apparatus for the production of gas from hydrocarbon liquid.
174,073. Feb. 29, 1876. Gray. Improvement in carburetors.
183,884. Oct. 31, 1876. Bangs. Improvement in gas carburetors.
219,158. Sept. 2, 1879. Jackson. Improvement in carburetors.
234,055. Nov. 2, 1880. Ormsby. Carbureting apparatus.
234,108. Nov. 2, 1880. Ruthven. Carbureting apparatus.
238,141. Feb. 22, 1881. McKensie & Mason. Carburetor.
245,443. Aug. 9, 1881. Callahan. Carburetor.
288,952. Nov. 20, 1883. Müller. Combined gas engine and carbureting apparatus.
302,442. July 22, 1884. Strong. Carburetor.
333,508. Jan. 5, 1886. English. Carburetor.
347,668. Aug. 17, 1886. Tibbets. Apparatus for carburetor gas.
409,570. Aug. 20, 1889. Elder. Carburetor.
433,336. July 29, 1890. Fiesse. Apparatus for oxygenating and carbureting air.
545,048. Aug. 27, 1895. Brunner. Carburetor.
545,125. Aug. 27, 1895. Grist. Vaporizer for gas motors.
614,400. Nov. 15, 1898. Lee et al. Composition, process of, and apparatus for making gas.
670,433. Mar. 28, 1901. Powers. Carburetor.
671,375. Apr. 2, 1901. Gallaher. Carburetor.
677,767. July 2, 1901. Jeffery. Hydrocarbon spraying device for gasoline engines.
682,905. Sept. 17, 1901. Bland. Vaporizer for explosive engines.
*683,110. Sept. 24, 1901. Felbaum. Mixing and vaporizing device for explosive engines.
693,462. Feb. 18, 1902. Titus. Combined carburetor and gasoline regulator.
727,635. May 12, 1903. Jeffery. Carburetor.
742,452. Oct. 27, 1903. De Laitte. Carburetor.
758,902. May 3, 1904. Dickinson. Vaporizer for explosive engines.
774,798. Nov. 15, 1904. Thompson. Carburetor.
*775,614. Nov. 22, 1904. Swain. Carburetor for explosive engines.
777,390. Dec. 13, 1904. O'Shea. Carburetor.
790,025. May 16, 1906. Bennett. Air carburetor.
792,158. June 13, 1905. Olds. Vaporizing device for explosive engines.
*837,984. Dec. 11, 1906. Vail. Vaporizer for internal-combustion engines.
853,915. May 14, 1907. Bowles et al. Apparatus for extracting gas from gasoline.
*857,111. June 18, 1907. Rice. Vaporizer for gas engines.
872,505. Dec. 3, 1907. Gore. Carburetor.
*886,283. Apr. 28, 1908. Wayrynen. Carburetor.
915,132. Mar. 16, 1909. Warstler. Carburetor.
916,463. Mar. 30, 1909. Looby. Carburetor.
*917,264. Apr. 6, 1909. De Thay. Carburetor.
951,923. Mar. 15, 1910. Van Buren. Carburetor.
957,781. May 10, 1910. Brady. Carburetor.
961,423. June 14, 1910. Sturtevant. Carburetor.
975,033. Nov. 8, 1910. Hockman. Carburetor.
979,907. Dec. 27, 1910. White. Carburetor.
1,108,081. Aug. 18, 1914. Oliver. Carbureting apparatus.
*1,110,453. Sept. 15, 1914. Monosmith. Carburetor.
1,136,997. Apr. 27, 1915. Bennett. Carburetor.
*1,141,796. June 1, 1915. Hertzog. Carburetor.
1,146,441. July 13, 1915. Oliver. Carbureting apparatus.

*1,183,864. May 23, 1916. Gardner. Carburetor.
Re. 2,893 (27,470). Mar. 10, 1868. Pease. Hydrocarbon vapor apparatus.
Re. 3,225 (46,302). Dec. 8, 1868. Mix. Improved apparatus for carbureting air.
Re. 6,754 (91,213). Nov. 23, 1875. Austin. Improvement in automatic feed and absorption carburetors.

Cross-reference patents, class 48, subclass 168.

24,199	79,667	162,843	226,122	587,867	772,530	990,159
47,986	83,147	163,323	238,818	620,496	876,678	1,050,322
50,250	84,234	176,349	248,750	620,586	885,230	1,109,035
52,946	103,994	184,049	261,861	622,008	964,657	1,123,469
55,950	104,642	189,727	308,886	672,854	951,501	1,125,368
63,215	111,175	190,714	311,858	701,890	973,882	1,157,363
64,776	127,039	193,407	312,289	706,600	976,322	
65,705	Re. 5,465	194,121	353,311	720,336	976,781	
66,067	149,111	199,928	379,129	738,604	976,885	
66,071	153,538	203,458	390,037	737,738	989,697	
70,014	Re. 6,070	211,194	427,225	742,920	989,848	
72,825	160,690	213,351	500,772	749,768	990,848	

SUBCLASS 169, CARBURETORS, SURFACE, FLOAT.

28,549. June 5, 1860. Ashcroft. Apparatus for naphthalizing gases.
44,883. Nov. 1, 1864. Odiorne. Improved apparatus for carbureting air.
59,473. Nov. 6, 1866. Stevens. Improved apparatus for carbureting air.
59,991. Nov. 27, 1866. Frank. Improved apparatus for carbureting air.
61,918. Feb. 12, 1867. Pierce. Improved apparatus for carbureting gas.
66,937. July 23, 1867. Pierce. Improved apparatus for carbureting gas.
69,483. Oct. 1, 1867. Richardson & Pond. Improvement in generating gas from hydrocarbon liquids.
71,665. Dec. 3, 1867. Thompson & Hall. Improved carbureting apparatus.
73,073. Jan. 7, 1868. Bierce. Improved apparatus for carbureting.
83,239. Oct. 20, 1868. Bassett. Improved apparatus for the manufacture of illuminating gas.
84,332. Nov. 24, 1868. Wood. Improved apparatus for carbureting air.
87,192. Feb. 23, 1869. Paine. Improved apparatus for charging air with hydrocarbon vapors.
104,716. June 28, 1870. Dupas & Barbarin. Improvement in apparatus for carbureting air.
105,190. July 12, 1870. Galagher. Improvement in gas machines.
113,147. Mar. 28, 1871. Dupas & Barbarin. Improvement in carbureting machines.
115,684. June 6, 1871. Bloomfield. Improvement in the manufacture of pneumatic gas.
118,302. Aug. 22, 1871. Tirrill. Improvement in apparatus for carbureting air and gas.
131,210. Sept. 10, 1872. Butler. Improvement in carbureting attachments for gas burners.
131,369. Sept. 17, 1872. Ofeldt. Improvement in carburetors.
131,943. Oct. 8, 1872. Dayton. Improvement in carburetors for air and gas.
136,228. Feb. 28, 1873. Elston. Improvement in carburetors.
141,968. Aug. 19, 1873. Van Houten. Improvement in apparatus for carbureting air.
143,523. Oct. 7, 1873. McMillan. Improvement in carburetors.
144,858. Nov. 23, 1873. Musgrave. Improvement in carburetors.
146,313. Jan. 13, 1874. Carr. Improvement in carburetors.
147,256. Feb. 10, 1874. Gray. Improvement in carburetors.
162,523. Apr. 27, 1875. Bickford. Improvement in carburetors.
162,543. Apr. 27, 1875. Foster. Improvement in carbureting gas machines.
171,751. Jan. 4, 1876. Wiggin. Improvement in carburetors.
178,973. Jan. 20, 1876. Stewart. Improvement in carburetors.
182,345. Sept. 19, 1876. Bickford. Improvement in carouretors.
190,419. May 8, 1877. Clingman. Improvement in floats for carburetors.
196,304. Oct. 23, 1877. Meredith. Improvement in carburetors.

211,176. Jan. 7, 1879. Ofeldt. Improvement in carburetors.
223,768. Jan. 20, 1880. Sanders. Carbureting apparatus.
225,485. Mar. 9, 1880. Strong. Apparatus for enriching and economizing coal gas.
227,853. May 18, 1880. Soule. Carburetor.
230,656. Aug. 3, 1880. Radkey. Carburetor.
244,434. July 19, 1881. Clingman. Carburetor.
251,678. Dec. 27, 1881. Barry. Carburetor.
254,243. Feb. 28, 1882. Small. Carburetor.
306,331. Oct. 7, 1884. Gardner et al. Gas machine.
306,485. Oct. 14, 1884. Hartfeldt. Gas generator.
309,467. Dec. 16, 1884. James. Apparatus for enriching coal gas.
355,594. Jan. 4, 1887. Daimler. Apparatus for impregnating air with hydrocarbon vapor.
362,197. May 3, 1887. Bennett. Carbureting apparatus.
370,149. Sept. 20, 1887. Leede. Carburetor.
371,034. Oct. 4, 1887. Collins. Carburetor.
423,257. Mar. 11, 1890. Huber. Carburetor.
433,495. Aug. 5, 1890. Smith. Carburetor.
475,972. May 31, 1892. Badlam. Carburetor.
528,377. Oct. 30, 1894. Moncur. Carburetor.
543,611. July 30, 1895. Clingman. Carburetor.
546,815. Sept. 24, 1895. Hain. Carburetor.
557,086. Mar. 24, 1895. Schroeder. Gas enricher.
562,214. June 16, 1896. Burrows. Vapor-gas apparatus.
596,560. Jan. 4, 1898. Welch. Process of and apparatus for generating gas.
608,531. Aug. 2, 1898. Stephenson. Carburetor.
622,808. Apr. 11, 1899. Kemp. Carburetor.
629,581. July 25, 1899. Martenette. Carburetor.
638,557. Dec. 5, 1899. Cary. Carburetor.
642,187. Jan. 30, 1900. Welch. Carbureting apparatus.
643,897. Feb. 13, 1900. Broichgans. Carburetor.
649,435. May 15, 1900. Carter & Zierlein. Carburetor.
653,534. July 10, 1900. Shearer. Carburetor.
656,495. Aug. 21, 1900. Anderson. Carburetor.
659,438. Oct. 9, 1900. Egan. Carburetor.
665,743. Jan. 8, 1901. Kern. Carburetor.
669,157. Mar. 5, 1901. Carter & Zierlein. Carburetor.
708,826. Sept. 9, 1902. Paul & Gundlack. Carburetor.
712,150. Oct. 28, 1902. Parrett. Carburetor.
733,498. July 14, 1903. Maurer. Carburetor.
742,533. Oct. 27, 1903. Walther. Carburetor.
744,877. Nov. 24, 1903. Parrott. Carburetor.
773,231. Oct. 25, 1904. Smith. Carburetor.
776,542. Dec. 6, 1904. Paul. Carburetor.
782,980. Feb. 21, 1905. Moehn. Carbureting apparatus.
816,267. Mar. 27, 1906. Steel. Carbureting apparatus.
819,074. May 1, 1906. Monroe. Gas-generating machine.
887,230. May 12, 1908. Rife. Carburetor.
951,590. Mar. 8, 1910. Brown. Carburetor.
1,049,273. Dec. 31, 1912. Ruthven. Carburetor.
1,055,891. Mar. 11, 1913. Doudney. Carbureting apparatus.
1,064,102. June 10, 1913. Smith & Keiver. Carburetor.
1,141,276. June 1, 1915. Smith. Carburetor.
1,155,184. Sept. 28, 1915. Winger. Carburetor.
Re. 1,024 (28,549). Aug. 14, 1860. Ashcroft. Improvement in apparatus for naphthalizing gases.
Re. 2,253 (44,883). May 22, 1866. Odlorne. Improved apparatus for carbureting air.

Cross-reference patents, class 48, subclass 169.

149,060	317,197	661,660	886,403	947,689	950,825	1,113,892
267,933	317,686	797,615	940,916			

SUBCLASS 219, PROCESSES, CARBURETING.

38,017. Mar. 24, 1863. Simonds & Warner. Improvement in treating gas for illumination.
50,385. Oct. 10, 1865. Pond. Improvement in the manufacture of illuminating gas.
50,491. Oct. 17, 1865. Pond. Improved apparatus for carbureting air.
55,359. June 5, 1866. Pond & Richardson. Improvement in generating and supplying illuminating gas.
66,070. June 25, 1867. Bassett. Improvement in the manufacture of illuminating gas.
67,796. Aug. 13, 1867. Pedrick. Improved process for treating petroleum.
100,534. Mar. 8, 1870. Lawrence. Improvement in carbureting air.
107,268. Sept. 13, 1870. Kidder. Improvement in carbureting apparatus.
110,427. Dec. 27, 1870. Boynton. Improvement in the methods of producing illuminating gas.
228,357. June 1, 1880. Jackson. Process of carbureting gas and air.
377,735. Feb. 14, 1888. Bidelman. Process of carbureting air.
420,797. Feb. 4, 1890. Hollingsworth. Process of vaporizing liquid hydrocarbons and supplying the vapor to burners.
425,877. Apr. 15, 1890. Hanford. Process of carbureting air or gas.
467,266. Jan. 19, 1892. Stringfellow. Process of manufacturing gas.
483,489. Sept. 27, 1892. Bidelman. Manufacture of gas.
487,617. Dec. 6, 1892. Griffes & Clarke. Process of carbureting air.
499,483. June 13, 1893. Tatham. Method of making gas.
579,415. Mar. 23, 1897. Van Norman. Manufacture of carbureted-air gas.
584,349. June 15, 1897. Griffen. Process of carbureting gas.
645,425. Mar. 13, 1900. McAllister. Process of carbureting.
656,484. Aug. 21, 1900. Shearer. Process of carbureting air or gas.
678,978. July 23, 1901. North. Process of making carbureted air.
721,957. Mar. 3, 1903. Kuenzel. Process of producing combustible fluid.
749,767. Jan. 19, 1904. Wilson. Process of producing carbureted air.
855,094. May 28, 1907. Busenbenz. Gas-manufacture process.
865,624. Sept. 10, 1907. Ziegler. Process for the manufacture of illuminating and heating gas.
885,095. Apr. 21, 1908. Solomon. Method of producing gas from alcohol.
978,853. Dec. 20, 1910. Cutter. Method of and apparatus for making gas.
1,019,430. Mar. 5, 1912. Dawson. Method of carbureting air.
1,042,567. Oct. 29, 1912. Kuenzel. Process for producing combustible gas.
1,183,939. May 23, 1916. Whittelsey. Vaporizing process.

Cross-reference patents, class 48, subclass 219.

2,357	94,360	119,663	268,878	464,779	590,893	614,400
66,069	110,946	163,323	349,211	511,950	596,560	1,109,777
69,483	114,744	169,423	356,477	527,789	607,417	1,150,782
72,118	117,998	206,196				

LIST No. 2.

CROSS-REFERENCE PATENTS FROM LIST No. 1, WITH PATENTS BELONGING IN, OR REGULARLY ASSIGNED TO, THE SUBCLASSES OF LIST No. 1 OMITTED.

8,433. Oct. 14, 1851. Warner. Lamp for burning vapor of benzol, etc.
9,967. Aug. 30, 1853. Drake. Benzol vapor apparatus.
31,720. Mar. 19, 1861. Kendall. Apparatus for naphthalizing gas.
32,222. Apr. 30, 1861. Gwynne. Apparatus for naphthalizing gas.
35,984. July 29, 1862. Bassett. Improvement in apparatus for carbureting gas.
46,770. Mar. 14, 1865. Bassett. Improvement of burners for carbureted air.
47,986. May 30, 1865. Salisbury. Improved apparatus for the manufacture of gas.
56,116. July 3, 1866. Stevens. Improvement in treating gas for illumination and other purposes.
62,856. Mar. 12, 1867. Kidd. Carburetor.

70,014. Oct. 22, 1867. Pease. Improved carburetor for locomotive headlights.
72,118. Dec. 10, 1867. Terry. Improvement in manufacturing illuminating gas.
73,900. Jan. 28, 1868. Jenkins. Improved carbureted-air lamp.
76,535. Apr. 7, 1868. Sloan. Improved apparatus for generating gas.
84,234. Nov. 17, 1868. Verstraet. Improvement in hydrocarbon burners.
89,536. Apr. 27, 1869. Wood. Improvement in lamps.
90,436. May 25, 1869. Dunderdale. Improvement in carburetors.
107,743. Sept. 27, 1870. Whitney. Improvement in gas-carbonizing attachments for lights.
110,005. Dec. 13, 1870. Brown. Improvement in gaslights.
114,358. May 2, 1871. Simonds. Improvement in gas machines.
114,744. May 16, 1871. Ambuhl. Improvement in apparatus for carbureting hydrogen gas.
115,988. June 13, 1871. Sloper. Improvement in apparatus for carbureting air.
119,663. Oct. 3, 1871. Springer. Improvement in gas machines.
128,321. June 25, 1872. Myer. Improvement in apparatus for the manufacture of illuminating gas.
130,164. Aug. 6, 1872. Symes. Improvement in apparatus for the manufacture of gas.
132,132. Oct. 15, 1872. Ball. Improvement in carbureting gas lamps.
133,118. Nov. 19, 1872. Post. Improvement in carbureting lamps.
138,160. Apr. 22, 1873. Irland. Improvement in gas generators.
138,715. May 6, 1873. Tilden. Improvement in gas machine.
143,534. Oct, 7, 1873. Shaler. Improvement in carburetors.
149,060. Mar. 31, 1874. Ramsdell. Improvement in the manufacture of wood gas.
151,557. June 2, 1874. Bingham. Improvement in the manufacture of hydrogen gas.
153,952. Aug. 11, 1874. Hawes. Improvement in gas-carbureting machines.
156,172. Oct. 20, 1874. Olney. Improvement in processes and apparatus for the manufacture of illuminating gas.
163,323. May 18, 1875. Martin. Improvement in the manufacture of gas.
163,535. May 18, 1875. Shaler. Improvement in carburetors.
167,150. Aug. 31, 1875. Ball. Vapor burner.
168,910. Oct. 19, 1875. Marks. Improvement in carburetors.
177,191. May 9, 1875. Ball. Improvement in lamps.
189,727. Apr. 17, 1877. Greenough. Apparatus for producing illuminating gas.
190,673. May 15, 1877. Dopp. Improvement in hydrocarbon liquid attachments for gas burners.
191,381. May 29, 1877. Spengler. Improvement in oil-gas burners.
192,825. July 10, 1877. Hangliter. Improvement in apparatus for carbureting air.
194,121. Aug. 14, 1877. Austin. Improvement in lamps for burning naphtha gas.
197,944. Dec. 11, 1877. Palmer. Improvement in carbureting lamps.
206,999. Aug. 13, 1878. Ball. Improvement in carbureting lamps.
210,717. Dec. 10, 1878. Sloane. Improvement in carburetors for cars.
213,351. Mar. 18, 1879. Roth. Improvement in carburetors.
225,778. Mar. 23, 1880. Wittig & Hees. Gas engine.
228,547. June 8, 1880. Maxim. Gas apparatus.
238,757. Mar. 15, 1881. Brainard. Carburetor.
240,994. May 3, 1881. Gaume. Gas engine.
242,379. May 31, 1881. Dhaler. Carburetor.
249,160. Nov. 8, 1881. Crocker. Cooking apparatus.
252,307. Jan. 17, 1882. Fagan. Device for burning air and hydrocarbon vapors.
261,861. Aug. 1, 1882. Litchfield & Henshaw. Burning and carbureting air.
267,933. Nov. 21, 1882. Ramsdell. Apparatus for manufacturing wood gas.
275,238. Apr. 3, 1883. Marcus. Vaporizer.
278,281. May 28, 1883. Shaler. Carburetor.
284,373. Sept. 4, 1883. Brough. Carburetor.
286,030. Oct. 2, 1883. Marcus. Gas engine.
302,045. July 15, 1884. Spiel. Gas engine.

308,693. Dec. 2, 1884. Paquelin et al. Veterinary cauterizer.
309,885. Dec. 30, 1884. Etève & De Braam. Carbureted-air engine.
312,512. Feb. 17, 1885. Roy. Cauterizing apparatus.
317,197. May 5, 1885. Ramsdell. Apparatus for manufacturing gas from wood.
336,572. Feb. 23, 1886. Leede. Automatic carbureting lamp.
336,574. Feb. 23, 1886. Leede. Automatic carbureting lamp.
349,211. Sept. 14, 1886. Cottrell. Method of and apparatus for carbureting and mixing gas.
350,200. Oct. 5, 1886. Humee. Hydrocarbon vapor engine.
350,382. Oct. 5, 1886. Merritt. Carburetor.
*350,769. Oct. 12, 1886. Ragot & Smyers. Petroleum and gas motor.
356,476. Jan. 25, 1887. Johnston. Process of and apparatus for manufacturing illuminating gas.
360,944. Apr. 12, 1887. Averell. Process of and apparatus for generating illuminating gas.
370,253. Sept. 30, 1887. Holt & Crossley. Gas motor engine.
376,638. Jan. 17, 1888. Daimler. Engine-driven vehicle.
378,647. Feb. 28, 1888. Bennett. Carbureting lamp.
379,129. Mar. 6, 1888. Sanders. Car motor.
385,121. June 26, 1888. King & Brown. Carburetor.
386,029. July 10, 1888. Priestman. Motor engine operated by the combustion of liquid hydrocarbon.
403,367. May 14, 1889. Parker. Gas or gasoline engine.
421,474. Feb. 15, 1890. Beckfield & Schmid. Gas engine.
423,367. Mar. 11, 1890. Young. Carbureting street lamp.
423,393. Mar. 11, 1890. Roy. Cauterizing apparatus.
424,654. Apr. 1, 1890. McClelland et al. Vapor stove.
429,426. June 3, 1890. Dawson. Carbureting apparatus.
435,856. Sept. 2, 1890. Parker. Carburetor.
*439,813. Nov. 4, 1890. Diederichs. Vapor engine.
451,036. Apr. 28, 1891. Frost. Carburetor and attachment for lamps connected therewith.
*477,295. June 21, 1892. Charter. Gas engine.
488,454. Dec. 20, 1892. Roy. Thermocauter.
489,762. Jan. 10, 1893. Ruthven. Gas cooking apparatus.
490,415. Jan. 24, 1893. Reid et al. Lamp.
497,048. July 16, 1888. Durand. Carbureted-air engine.
500,477. June 27, 1893. Drysdale. Valve for hydrocarbon engines.
*504,728. Sept. 12, 1893. Gray. Hydrocarbon engine.
505,767. Sept. 26, 1893. Irgene. Gas or petroleum engine.
507,989. Nov. 7, 1893. Brünler. Petroleum motor.
512,270. Jan. 9, 1894. Blakeley. Apparatus for manufacturing gas.
515,440. Feb. 27, 1894. McGarrier. Carburetor.
538,791. May 7, 1895. Reichardt. Carburetor for thermocauters.
541,441. June 16, 1895. Lee. Thermocauter.
*542,043. July 2, 1895. Charter. Governor for gas engines.
542,410. July 9, 1895. Griffin. Liquid-hydrocarbon motor.
548,689. Oct. 29, 1895. Wirsching. Thermocauter.
*549,939. Nov. 19, 1895. Seck. Marine hydrocarbon motor.
*550,675. Dec. 3, 1895. Colborne. Gas or vapor engine.
552,812. Dec. 31, 1895. Battey. Motor for bicycles.
552,718. Jan. 7, 1896. Priestman. Hydrocarbon engine.
554,207. Feb. 4, 1896. Woodard. Vapor stove.
554,699. Feb. 18, 1896. Johnson. Gas generator or vaporizer.
*555,717. Mar. 3, 1896. Weinman et al. Gas engine.
555,378. Feb. 25, 1896. Henroid-Schweizer. Petroleum motor.
*557,496. Mar. 31, 1896. Duryea. Engine or motor.
562,307. June 16, 1896. Lamos. Gas engine.
*563,541. July 7, 1896. Allman. Vaporizer for oil engines.
563,548. July 7, 1896. Bodell. Gas or oil engine.
564,155. July 14, 1896. Millet. Velocipede.
564,769. July 29, 1896. Swain. Gas or oil engine.
568,017. Sept. 22, 1896. Cundall. Oil and gas motor engine.
574,614. Jan. 5, 1897. Lamos. Gas-engine attachment.
575,720. Jan. 26, 1897. Ledent. Gas engine.
582,073. May 4, 1897. Mead. Gas or oil engine.

583,982. June 8, 1897. Davis. Gasoline and gas engine.
*585,115. June 22, 1897. Miller. Gas engine.
*587,627. Aug. 3, 1897. Williams. Gas engine.
592,794. Nov. 2, 1897. Lanchester. Gas or oil motor engine.
593,084. Nov. 2, 1897. Spacke. Gas engine.
596,536. Jan. 4, 1898. Park. Combined gasoline blowpipe and burner.
602,820. Apr. 28, 1898. Beck. Gas engine.
*605,815. June 14, 1898. Duryea. Gas engine.
609,081. Aug. 30, 1898. Parker. Carburetor.
612,258. Oct. 11, 1898. Mead. Gas or oil engine.
*613,757. Nov. 8, 1898. Carnell. Gas engine.
617,530. Jan. 10, 1899. Howard. Direct conversion of energy of fuel and an expansion medium into power.
620,496. Feb. 28, 1899. Ravenez. Carburetor.
*622,891. Apr. 11, 1899. Graef. Gas engine.
623,190. Apr. 18, 1899. Stoddard. Explosive engine.
623,361. Apr. 18, 1899. Frew. Oscillating gas or steam engine.
*625,887. May 30, 1899. Lair. Engine.
627,359. June 20, 1899. Steele. Automobile vehicle.
*627,857. June 27, 1899. Knox. Gas engine.
628,222. July 4, 1899. Hewitt. Vapor blowpipe.
*632,859. Sept. 12, 1899. Walrath. Explosive engine.
632,888. Sept. 12, 1899. Ayres. Gas engine.
633,014. Sept. 12, 1899. Lawson. Motor vehicle.
635,456. Oct. 24, 1899. Wood & Eddy. Gasoline lamp.
637,299. Nov. 21, 1899. Strong. Oil-vaporizing device for gas engines.
*645,044. Mar. 6, 1900. Otto. Gas engine.
*657,140. Sept. 4, 1900. Starr & Cogswell. Explosive gas engine.
659,911. Oct. 16, 1900. Barnard. Gas engine.
*660,482. Oct. 23, 1900. Bates. Rotary explosive engine.
662,922. Dec. 4, 1900. Dudley. Branding iron.
*664,200. Dec. 18, 1900. White. Gasoline engine.
668,952. Feb. 26, 1901. Carson. Desulphurizing coppe matte.
672,500. Apr. 23, 1901. Van Duzen. Vaporizing device for crude-oil explosive engines.
673,188. Apr. 30, 1901. Miller. Governing device for explosive engines.
*677,288. June 25, 1901. Secor. Oil-feed device for explosive motors.
679,018. July 23, 1901. Fischer. Oil feed for carburetors.
679,389. July 30, 1901. McCall. Governor for explosive engines.
*686,092. Nov. 5, 1901. Lear. Vaporizer for gasoline engines.
*686,101. Nov. 5, 1901. Maybach. Regulation device for explosion motors.
690,486. Jan. 7, 1902. Tomlinson. Apparatus for the vaporization, combustion, and utilization of hydrocarbon oils.
*690,610. Jan. 7, 1902. Richardson. Hydrocarbon engine.
692,071. Jan. 28, 1902. Pugh. Explosive engine.
692,860. Feb. 11, 1902. Kemp. Carburetor.
*696,146. Mar. 25, 1902. Riotte. Mixing or spraying device.
698,895. Apr. 29, 1902. Beck. Continuous-combustion turbine.
*703,769. July 1, 1902. De Long. Motor vehicle.
706,482. Aug. 5, 1902. Wirsching. Thermocauter.
*706,494. Aug. 5, 1902. Minogue. Motive-power engine.
*710,841. Oct. 7, 1902. Brush. Mixing valve for gas or gasoline engines.
*726,986. May 5, 1903. Peteler. Carburetor for gas engines.
*730,084. June 2, 1903. Boulfuss. Gas or vapor engine.
733,444. July 14, 1903. Washburne. Carburetor.
734,772. July 28, 1903. Strowger. Carbureting lamp.
737,788. Sept. 1, 1903. Hitchcock. Vapor generator.
*740,571. Oct. 6, 1903. Joranson. Gas engine.
745,055. Nov. 24, 1903. Harris. Explosive engine.
745,578. Dec. 1, 1903. Dean. Apparatus for supplying explosive engines with explosive mixtures.
747,190. Dec. 15, 1903. Krauss. Motor wheel for bicycles or other vehicles.
*747,264. Dec. 15, 1903. Sturtevant. Carburetor for explosion engines.
750,764. Jan. 26, 1904. Harmany. Carburetor.
753,510. Mar. 1, 1904. Murdock. Gas engine.
758,790. May 3, 1904. Snell. Carburetor.

760,247. May 17, 1904. Ranney. Carburetor.
767,782. Aug. 16, 1904. Bromley. Centralizing operating mechanism for valves.
768,068. Aug. 23, 1904. Maton. Carbureting lamp.
*772,530. Oct. 18, 1904. McGee. Carburetor for gasoline engines.
773,543. Nov. 1, 1904. Chace. Oil burner.
788,427. Apr. 25, 1905. Reichenbach. Self-carbureting lamp.
790,325. May 23, 1905. Stelle. Explosive engine.
*791,501. June 6, 1905. Richard. Gas or explosion engine.
*796,712. Aug. 8, 1905. Fergusson & Sheppy. Carburetor for hydrocarbon engines.
800,996. Oct. 3, 1905. Drummond. Internal-combustion engines.
801,390. Oct. 10, 1905. Low. Hydrocarbon motor.
*806,125. Dec. 5, 1905. Farwell. Rotary explosive engine.
806,460. Dec. 5, 1905. Bucklin. Spraying device.
807,131. Dec. 12, 1905. Sale. Carburetor.
807,391. Dec. 12, 1905. Low. Hydrocarbon motor.
807,885. Dec. 19, 1905. Lyon. Crude-oil engine.
*810,435. Jan. 23, 1906. Reynolds. Rotary explosive engine.
812,860. Feb. 20, 1906. Low. Hydrocarbon motor.
813,796. Feb. 27, 1906. Holgate. Carburetor.
816,549. Mar. 27, 1906. Heckert. Gas engine.
*822,172. May 29, 1906. Welcome. Internal-combustion engine.
*823,742. June 19, 1906. Schmidt. Carburetor-control mechanism for motor vehicles.
830,744. Sept. 4, 1906. Frantz. Explosive engine.
*832,532. Oct. 2, 1906. Carlson & Shimpf. Carburetor.
*846,471. Mar. 12, 1907. Hobart. Feed governor for oil engines.
846,679. Mar. 12, 1907. Mason & Sinclair. Carburetor.
*849,538. Apr. 9, 1907. Gaeth. Carburetor.
852,272. Apr. 30, 1907. Hennig. Governing means for internal-combustion engines.
*855,532. June 4, 1907. Miller. Speed-controlling mechanism for explosive motors.
*862,574. July 2, 1907. Dalkranian. Carburetor.
867,605. Oct. 8, 1907. Rothe. Fuel-valve controller for hydrocarbon engines.
867,797. Oct. 6, 1907. Coleman. Engine starter.
868,281. Oct. 15, 1907. Low. Hydrocarbon motor.
*872,336. Dec. 3, 1907. Gibbs. Internal-combustion engine.
872,419. Dec. 3, 1907. Herbst. Charge-forming device for internal-combustion engines.
878,706. Feb. 11, 1908. Anderson. Carburetor.
888,240. Mar. 31, 1908. Sabathé. Internal-combustion engine.
891,822. June 23, 1908. Brennan. Carburetor for explosive engines.
892,726. July 7, 1908. Holgate. Carburetor.
*894,656. July 28, 1908. Johnston. Carburetor for internal-combustion engines.
895,222. Aug. 4, 1908. Winton & Anderson. Multiple-cylinder two-cycle explosion engine.
904,455. Nov. 17, 1908. De Roos. Vaporizing device for internal-combustion engine.
*904,508. Nov. 24, 1908. Carlin. Carburetor.
*904,855. Nov. 24, 1908. Enrico. Carburetor for internal-combustion engines.
906,783. Dec. 15, 1908. Du Brie. Apparatus for supplying fuel to gas engines.
*908,112. Dec. 29, 1908. Longnecker. Internal-combustion engine.
909,558. Jan. 12, 1909. Daellenbach. Internal-combustion engine.
913,121. Feb. 23, 1909. Frayer. Valve control.
921,934. May 18, 1909. Willard. Apparatus for producing gas from liquid hydrocarbons.
*922,145. May 18, 1909. Howarth. Carburetor.
*922,383. May 18, 1909. Brons. Hydrocarbon engine.
926,756. July 6, 1909. Low. Means for supplying air to hydrocarbon motors.
*928,939. July 27, 1909. Charter. Charge-forming device for gas engines.
*930,483. Aug. 10, 1909. Kershaw. Carburetor and like device for mixing gas or vapor and air.
*931,389. Aug. 17, 1909. Crook. Internal-combustion engine.
942,863. Dec. 7, 1909. McIntire. Apparatus for treating gas.

946,737. Jan. 18, 1910. Riotte. Pressure-regulated gas valve for engines.
948,744. Feb. 8, 1910. Shearer. Carburetor.
*959,066. May 24, 1910. Ottaway. Carburetor.
*961,152. June 14, 1910. Morse. Internal-combustion engine.
966,581. Aug. 9, 1910. McCarty. Device for alternating atomizer pressures.
973,240. Oct. 18, 1910. Torchebeuf & Lanneau. Carbureting lamp.
*973,602. Oct. 25, 1910. Williams. Carburetor.
*975,696. Nov. 15, 1910. Koontz. Carburetor.
*975,796. Nov. 15, 1910. Radcliffe. Internal-combustion engine.
*976,237. Nov. 22, 1910. Westmacott. Carburetor and vaporizer for internal-combustion engines.
976,885. Nov. 29, 1910. Kemp. Carbureting apparatus.
*977,813. Dec. 6, 1910. Marrder. Carburetor.
979,667. Dec. 27, 1916. Harpster. Vaporizer for internal-combustion engines.
979,787. Dec. 27, 1910. Noyes. Mixer for gases and liquids.
*979,908. Dec. 27, 1910. Willet. Carburetor.
980,946. Jan. 10, 1911. Heermans. Internal-combustion engine.
982,825. Jan. 31, 1911. Johnston. Mixing valve for hydrocarbon engines.
*983,307. Feb. 7, 1911. Perkins. Internal-combustion engine.
994,985. June 13, 1911. Deprez & Richir. Carburetor.
1,004,661. Oct. 3, 1911. Knapp. Purifying apparatus for acetylene gas.
*1,013,955. Jan. 9, 1912. Roberts. Carburetor.
*1,017,750. Feb. 20, 1912. Hanchett. Mixer for gaseous fuel.
1,023,402. Apr. 16, 1912. Whiting. Mixer for gaseous fuel.
1,025,814. May 7, 1912. Lemp. Fuel-supply system for explosive engines.
1,030,388. June 25, 1912. Cross. Motive-fluid mixer for internal-combustion engines.
1,036,812. Aug. 27, 1912. Edmonson. Separator and volatilizer.
1,038,300. Sept. 10, 1912. Crone. Combined vaporizer and priming pump.
1,054,205. Feb. 25, 1913. Illmer & Kunze. Internal-combustion engine.
1,056,760. Mar. 18, 1913. Watt. Gas mixer and heater for explosive engines.
*1,060,053. Apr. 29, 1913. Winkler. Carburetor.
1,064,106. June 10, 1913. Stewart. Auxiliary air supply means for internal-combustion engines.
1,066,391. July 1, 1913. Von Eicken. Producer of inert gases.
*1,069,502. Aug. 5, 1913. Wadsworth. Priming device for internal-combustion engines.
1,070,449. Aug. 19, 1913. Green et al. Air-admission regulator.
1,077,414. Nov. 4, 1913. Marsh. Cooling device for an engine.
*1,079,338. Nov. 25, 1913. Hazelton. Gaseous-fuel mixer.
1,082,007. Dec. 23, 1913. Brush. Gas-mixture producer.
1,083,111. Dec. 30, 1913. MacConaghy. Explosion motor.
*1,084,028. Jan. 13, 1914. Pierce. Carburetor.
1,096,585. May 12, 1914. Yost & Jahnke. Divided-spray injection engine.
1,099,445. June 9, 1914. Jaubert. Method of running internal-combustion engines.
*1,099,995. June 16, 1914. Page & Seldon. Carburetor.
1,101,271. June 23, 1914. Gentzen. Method of introducing fuel into internal-combustion engines.
1,106,935. Aug. 11, 1914. Freer. Vaporizer and carburetor.
*1,109,192. Sept. 1, 1914. Wright. Internal-combustion engine.
1,111,620. Sept. 22, 1914. Sheedy. Auxiliary air inlet and primer for internal-combustion engines.
*1,111,897. Sept. 29, 1914. Harrold. Mixing valve for explosive engines.
*1,116,192. Nov. 3, 1914. Winton. Vaporizing device.
1,117,354. Nov. 17, 1914. Erickson. Gasifying device for liquid fuel.
*1,117,641. Nov. 17, 1914. Cottle. Internal-combustion engine.
*1,117,642. Nov. 17, 1914. Cottle. Internal-combustion engine.
1,120,828. Dec. 15, 1914. Lowry. Fuel-supply system and starter for explosion engines.
1,124,706. Jan. 12, 1915. Conwell & Little. Heater for gaseous fuel.
*1,125,525. Jan. 19, 1915. Hathcock. Carburetor.
*1,131,157. Mar. 9, 1915. Percival & Patterson. Kerosene-gas generator.
*1,131,371. Mar. 9, 1915. Hatfield. Fuel-mixing device for internal-combustion engines.
1,132,420. Mar. 16, 1915. Andereau. Heater for gaseous fluids.

*1,136,368. Apr. 20, 1915. Riker. Regulating means for internal-combustion engines.
1,142,440. June 8, 1915. Kramer. Fuel pulverizer for internal-combustion engines.
*1,143,092. June 15, 1915. Unckles. Carburetor.
1,143,258. June 15, 1915. Dunham. Inspirator for internal-combustion engines.
*1,143,779. June 22, 1915. Pembroke. Carburetor.
*1,151,989. Aug. 31, 1915. Balassa. Carburetor.
1,158,179. Oct. 26, 1915. Clerk. Internal-combustion engine working with coke-oven and other gases.
*1,158,435. Nov. 2, 1915. Bourne. Carburetor.
*1,160,837. Nov. 16, 1915. Burnham. Carburetor.
1,160,897. Nov. 16, 1915. Holloway. Means for treating kerosene or the like for use in hydrocarbon engines.
1,161,095. Nov. 23, 1915. Westinghouse. Internal-combustion engine.
1,165,656. Dec. 28, 1915. Entz. Carburetor heater.
1,165,914. Dec. 28, 1915. Shaw. Fire-prevention means for internal-combustion engines.
*1,167,217. Jan. 4, 1916. Reichenbach. Carburetor.
*1,176,267. Mar. 21, 1916. Baverey. Carburetor.
Re. 4,476 (115,983). July 18, 1871. Sloper. Improvement in apparatus for carbureting air.
Re. 12,832. Mar. 28, 1905. Jacob. ———.

LIST NO. 3.

SELECTED PATENTS FROM SEARCHED SUBCLASSES ARRANGED ACCORDING TO CLASS AND SUBCLASS, WITH PATENTS WHICH APPEAR IN THE PREVIOUS LISTS OMITTED.

CLASS 123, INTERNAL-COMBUSTION ENGINES.

SUBCLASS 3, GENERATING PLANTS.

326,430. Sept. 15, 1885. James. Apparatus for manufacture, using and furnishing motive power by aid of air and hydrocarbon oils.
649,713. May 15, 1900. Woodward & Barckdall. Explosive engine.

SUBCLASS 4, INTERNAL COMBUSTION AND FLUID PRESSURE.

620,431. Feb. 28, 1899. Eisenhuth. Explosive engine for vehicles.
625,416. May 23, 1899. Revel. Carbureted air or other fluid pressure engine.
647,583. Apr. 17, 1900. Scott. Explosion engine.
651,780. June 12, 1900. Dawson. Interal-combustion motor.
729,652. June 2, 1903. Osborne. Motor.
790,344. May 23, 1905. Clark. Valve-gear mechanism.
832,592. Oct. 9, 1906. Bush. Motor.

SUBCLASS 7, HAMMERS.

*1,033,503. July 23, 1912. White & Duryea. Internal-combustion power hammer.
*1,033,505. July 23, 1912. White & Duryea. Power device.

SUBCLASS 8, ROTARY.

795,889. Aug. 1, 1905. Billinghurst. Internal-combustion turbine.
1,006,417. Oct. 17, 1911. Sullivan. Rotary compound explosive engine.

SUBCLASS 9, ROTARY IMPACT.

853,124. May 7, 1907. Schann. Turbine.
877,194. Jan. 21, 1908. Holzwarth. Gas turbine.
1,063,666. June 3, 1913. Duryea & White. Internal-combustion tool.
1,187,293. June 13, 1916. Faurot. Turbine.

SUBCLASS 10, ROTARY REACTION.

364,866. June 14, 1887. Seigneuret. Reaction wheel.

SUBCLASS 13, ROTARY ROTATING ABUTMENT.

868,678. Oct. 22, 1907. MacKasie. Rotary engine.
883,363. Mar. 31, 1908. Walker. Rotary explosive engine.
1,177,380. Mar. 28, 1916. Carpenter. Rotary explosive engine.

SUBCLASS 15, ROTARY, SWINGING ABUTMENT.

833,107. Oct. 9, 1906. Akerberg. Rotary engine.
930,601. Aug. 10, 1909. Kasparek. Rotary internal-combustion motor.

SUBCLASS 16, ROTARY, SLIDING PISTON.

260,513. July 14, 1882. Wigmore. Gas motor engine.
709,080. Sept. 16, 1902. McCahon. Combination air and vapor motor.

SUBCLASS 18, OSCILLATING PISTON.

1,080,272. Dec. 2, 1913. Fletcher. Engine.

SUBCLASS 20, STEAM CONVERTIBLE.

1,162,423. Nov. 30, 1915. Wentworth. Internal-combustion engine.

SUBCLASS 22, INTERNAL COMBUSTION AND AIR.

30,701. Nov. 20, 1860. Wilcox. Air engine.
Re. 1,942. Apr. 25, 1865. Wilcox. Improvement in hot-air engine.

SUBCLASS 25, WATER AND HYDROCARBON.

49,346. Aug. 8, 1865. Hugon. Improvement in gas engines.
591,346. Oct. 19, 1897. Mayhew. Gas engine.
597,860. Jan. 25, 1898. Rolfe. Explosion engine.
*819,239. May 1, 1906. Marks. Mixing and combining device for gas engines.
861,411. July 30, 1907. Weiss. Internal-combustion engine.
*917,283. Apr. 6, 1909. Frost. Internal-combustion engine.
1,008,825. Nov. 14, 1911. Holroyd. Apparatus for generating products of combustion.
*1,077,881. Nov. 4, 1913. Higgins. Process of mixing fuel for carburetors.
*1,148,166. July 17, 1915. Harrington. Explosion engine and method of operating the same.

SUBCLASS 28, OIL ENGINE, PUMP SUPPLY TO AIR INLET, FOUR-CYCLE.

349,369. Sept. 21, 1886. Spiel. Petroleum and gas engine.
349,464. Sept. 21, 1886. Spiel. Gas engine.
393,127. Nov. 20, 1888. Spiel. Petroleum engine.
426,337. Apr. 22, 1890. Sintz. Gas engine.
502,255. July 25, 1893. Hoyt. Gas engine.
527,635. Oct. 16, 1894. Voll. Gas engine.
*532,814. Jan. 8, 1895. Charter. Gas engine.
543,818. July 30, 1895. Weeks. Gas engine.
570,500. Nov. 3, 1896. Prouty. Gasoline and vapor engine.
574,610. Jan. 5, 1897. Joranson. Gas engine.
584,960. June 22, 1897. Quast. Explosive engine.
584,961. June 22, 1897. Quast. Gas engine.
597,326. Jan. 11, 1898. Quast. Gas engine.
607,878. July 26, 1898. Quast. Gas engine.
612,756. Oct. 18, 1898. Ostenberg. Gas engine.
624,975. May 16, 1899. Quast. Gas engine.
626,275. June 6, 1899. Froelich. Speed regulator for explosive engines.
665,714. Jan. 8, 1901. Zimmerman. Speed regulator for explosive engines.

672,615. Apr. 23, 1901. Doorenbos. Gas or gasoline engine.
694,948. Mar. 11, 1902. Davis. Explosive engine.
718,511. Jan. 13, 1903. Ostenberg. Explosion engine.
858,022. June 25, 1907. Podlesak. Fuel feeding device for internal-combustion motors.

SUBCLASS 34, OIL ENGINES, EXTERNAL VAPORIZING.

289,691. Dec. 4, 1883. Nash. Gas engine.
289,692. Dec. 4, 1883. Nash. Gas engine.
295,784. Mar. 25, 1884. Maxim. Gas engine.
331,079. Nov. 24, 1885. Nash. Explosive-vapor engine.
331,210. Nov. 24, 1885. Nash. Explosive-vapor engine.
334,041. Jan. 12, 1886. Nash. Method of operating explosive-vapor engines.
376,212. Jan. 10, 1888. Shanck. Gas engine.
378,328. Feb. 21, 1888. List & Kosakoff. Petroleum motor.
425,116. Apr. 8, 1890. Valentine & Grigg. Gas engine.
544,586. Aug. 13, 1895. Mead. Gas or oil engine.
583,399. May 25, 1897. Lewis. Gas or vapor engine.
*598,986. Feb. 15, 1898. Gere. Combustible-vapor engine.
615,766. Dec. 13, 1898. Vansickle. Gas engine.
648,914. May 8, 1900. Bertheau. Vaporizer for petroleum motors.
649,122. May 8, 1900. Allen. Rotary engine.
683,080. Sept. 24, 1901. Stewart. Gas engine.
701,140. May 27, 1902. Briggs. Hydrocarbon-oil engine.
736,807. Aug. 18, 1903. Wilkinson. Internal-combustion engine.
756,834. Apr. 12, 1904. Denison. Vaporizer for explosive engines.
770,872. Sept. 27, 1904. Söhnlein. Explosive engine.
805,774. Nov. 28, 1905. Blaisdell. Internal-combustion engine.
873,840. Dec. 17, 1907. Clift. Internal-combustion engine.
881,189. Mar. 10, 1908. Losch & Gerber. Explosive engine.
894,568. July 28, 1908. Avery. Gas engine.
899,186. Sept. 22, 1908. Rabsilber. Internal-combustion engine.
909,897. Jan. 19, 1909. Hertzberg. External electrical vaporizer for combustion engines.
909,900. Jan. 19, 1909. Hertzberg et al. Electrically heated starting vaporizer for internal-combustion engines.
961,581. June 14, 1910. Bowen. Explosive engine.
971,682. Oct. 4, 1910. Low. Economizer.
974,087. Oct. 25, 1910. Low. Charge-forming arrangement for use in internal-combustion engines and turbines.
975,008. Nov. 8, 1910. White. Method of operating gas engines and apparatus therefor.
977,847. Dec. 6, 1910. Wright. Internal-combustion engine.
1,003,795. Sept. 19, 1911. Rabsilber. Internal-combustion engine.
1,006,244. Oct. 17, 1911. Low & Hertzberg. Explosive engine.
1,026,871. May 21, 1912. Lake. Internal-combustion engine.
*1,060,053. Apr. 29, 1913. Winkler. Carburetor.
*1,128,958. Feb. 16, 1915. Duryea. Internal-combustion engine.
1,135,083. Apr. 13, 1915. Waite. Internal-combustion engine.
1,138,824. May 11, 1915. Wills. Internal-combustion engine.
1,152,003. Aug. 31, 1915. Butler. Gas producer for explosive engines.

SUBCLASS 35, OIL ENGINES, EXTERNAL VAPORIZING.

377,866. Feb. 14, 1888. Spiel. Petroleum engine.
399,569. Mar. 12, 1889. Schiltz. Petroleum engine.
412,228. Oct. 8, 1889. Altmann & Kuppermann. Petroleum motor.
425,909. Apr. 15, 1890. Roots. Petroleum engine.
428,764. May 27, 1890. Taverner. Engine or motor operated by explosive mixtures.
*437,507. Sept. 30, 1890. Otto. Petroleum or oil motor engine.
*440,485. Nov. 11, 1890. Lindley & Browett. Liquid hydrocarbon motor engine.
453,446. June 2, 1891. Lindner. Hydrocarbon engine.
482,201. Sept. 6, 1892. Schumm. Oil motor engine.

511,651. Dec. 26, 1893. Roots. Petroleum or liquid hydrocarbon engine.
518,151. Apr. 10, 1894. Knight. Vaporizer for hydrocarbon motors.
524,945. Aug. 21, 1894. Knight. Hydrocarbon motor.
544,879. Aug. 20, 1895. Best. Gas engine and generator.
549,677. Nov. 12, 1895. Mayer. Vapor engine.
552,686. Jan. 7, 1896. Carter. Petroleum-oil engine.
*565,033. Aug. 4, 1896. Robinson. Gas or oil engine.
*566,125. Aug. 18, 1896. Barker. Vaporizer for oil engines.
*578,034. Mar. 2, 1897. Bomborn. Vaporizer for petroleum engines.
582,271. May 11, 1897. Dawson. Oil or gas engine.
589,108. Aug. 31, 1897. Wordsworth. Motor worked by hydrocarbon or other gases.
600,107. Mar. 1, 1898. Wiseman & Holroyd. Hydrocarbon motor.
600,974. Mar. 22, 1898. Wiseman & Holroyd. Hydrocarbon motor.
633,319. Sept. 19, 1899. Inman. Carburetor.
668,773. Feb. 26, 1901. Hanson. Vaporizer for explosive engines.
*700,295. May 20, 1902. Bertheau. Four-stroke petroleum motor.
*725,191. Apr. 14, 1903. Allsop. Petroleum engine.
*728,873. May 26, 1903. Cundall. Oil engine.
733,417. July 14, 1903. Nicholson. Internal-cumbustion engine.
750,451. Jan. 26, 1904. Grant. Vaporizer for gas engine.
773,245. Oct. 25, 1904. Cappell. Colling motors.
*860,630. July 23, 1907. Brady. Valve gear for internal-combustion engines.
*951,353. Mar. 8, 1910. Weller. Gas engine.
1,135,082. Apr. 13, 1915. Waite. Internal-combustion engine.
1,135,083. Apr. 13, 1915. Waite. Internal-combustion engine.
1,157,287. Bellem & Bregeras. Internal-combustion engine.
Re. 11,633. Oct. 12, 1897. Gas engine and generator.

SUBCLASS 52, MULTIPLE CYLINDER.

*1,128,717. Feb. 16, 1915. Ottaway. Carburetor.
1,159,985. Nov. 9, 1915. Orlopp. Fuel connection for internal-combustion engines.

SUBCLASS 73, TWO-CYCLE, REAR-COMPRESSION CRANK CASE.

*1,096,819. May 19, 1914. Ahlberg. Internal-combustion engine.
*1,102,025. June 30, 1914. Ellis. Fuel injector for explosion engines.
*1,139,364. May 11, 1915. Obergfell. Internal-combustion engine.

SUBCLASS 76, FOUR-CYCLE SCAVENGING.

1,146,864. July 20, 1915. Gibson. Internal-combustion engine.

SUBCLASS 98, SPEED REGULATORS, MANUALLY CONTROLLED.

*775,103. Nov. 15, 1904. Duryea. Internal-combustion engine.
*872,138. Nov. 26, 1907. Mayer. Valve gear.
962,248. June 21, 1910. Rockwell. Mechanism for feeding fuel.
*998,355. July 18, 1911. Lee. Carburetor for internal-combustion engines.
1,020,379. Mar. 12, 1912. Weiwoda. Throttle valve for carburetors.
*1,029,685. June 18, 1912. Huff. Controlling mechanism for motor vehicles.

SUBCLASS 99, SPEED REGULATORS, COMBINED TYPES.

368,444. Aug. 16, 1887. Baldwin. Gas engine.
1,138,831. May 11, 1915. Baker et al. Internal-combustion engine.
*1,153,364. Sept. 14, 1915. Warner. Internal-combustion engine.
1,186,037. June 6, 1916. Purdy. Control system for internal-combustion engines.

SUBCLASS 100, SPEED REGULATORS, CHARGE VOLUME PROPORTION VARYING.

408,683. Aug. 13, 1889. Baldwin. Gas engine.
*862,574. Aug. 6, 1907. Messinger. Carburetor.
*985,703. Feb. 28, 1911. Podlesak. Internal-combustion engine.

*1,014,328. Jan. 9, 1912. Podlesak. Mixture-producing and speed-governing device for gas engines.
*1,064,514. June 10, 1913. Mees. Method of regulating and controlling the valve motion in explosive motors.

SUBCLASS 101, SPEED REGULATORS, CHARGE VARYING AND OMITTING.

*754,001. Mar. 8, 1904. Mutel. Regulating device for engines.

SUBCLASS 102, SPEED REGULATORS, ELECTRICAL.

*727,565. May 12, 1903. Apple. Electric governor for gas engines.
1,089,478. Mar. 10, 1914. Kasley. Explosion motor.

SUBCLASS 103, SPEED REGULATORS, PNEUMATIC.

*626,120. May 30, 1899. Winton. Explosive engine.
663,183. Dec. 4, 1900. Millot. Speed governor for explosive engines.
762,965. June 21, 1904. Washburne. Feed mechanism for explosive engines.
782,244. Feb. 14, 1905. Haydon. Governor for explosion engines.
1,142,219. June 8, 1915. Ziegler. Governing and throttling device for internal-combustion engines.

SUBCLASS 104, SPEED REGULATORS, SUPPLY PUMP, REGULATING.

906,022. Dec. 8, 1908. Hesselmann. Fuel pump ofr reversible internal-combustion engine.
1,017,591. Feb. 13, 1912. Rigby. Method of governing internal-combustion engines.
1,067,424. July 15, 1913. Hamke. Fuel pump for internal-combustion engines.
1,166,230. Dec. 28, 1915. Lemp. Fuel pump.

SUBCLASS 106, CHARGE PROPORTION VARYING.

1,075,685. Oct. 14, 1913. Elkin. Carburetor.
1,083,433. Jan. 6, 1914. Crist. Explosion motor.
1,089,462. Mar. 10, 1914. Crist. Explosion motor.
1,107,103. Aug. 11, 1914. Peaslee. Carburetor.
*1,144,549. June 29, 1915. Kane. Carbureting internal-combustion engines.

SUBCLASS 108, THROTTLING.

*882,170. Mar. 17, 1908. Schmidt. Carburetor.
*889,082. May 26, 1908. McClintock. Combined carburetor and governor for internal-combustion engines.
*1,105,142. July 28, 1914. Jager. Internal-combustion engine.
1,130,103. Mar. 2, 1915. Plumm. Throttle valve for carburetors.
*1,149,597. Aug. 10, 1915. Riker. Regulating means for internal-combustion engines.

SUBCLASS 112, SUPPLY-VALVE REGULATING.

*599,876. Feb. 22, 1898. White. Gas-engine attachment.

SUBCLASS 117, AUTOMATICALLY CONTROLLED IGNITING DEVICES.

1,163,692. Dec. 14, 1915. Royce. Controlling device for the electrical ignition systems of internal-combustion engines.

SUBCLASS 122, CHARGE-FORMING DEVICES, HEATING.

276,075. Apr. 17, 1883. Quick. Tramway locomotive.
400,850. Apr. 2, 1889. Humes. Hydrocarbureted air engine.
407,961. July 30, 1889. McNett. Combined gas engine and carburetor.
*573,762. Dec. 22, 1896. Charter. Gas engine.
*657,788. Sept. 11, 1900. Jessen. Carburetor for explosive engine.
*673,901. May 14, 1901. Eckhard. Mixer and vaporizer for gas engines.

*676,285. June 11, 1901. Van Duzen. Spraying and vaporizing device for crude-oil explosive engines.
*759,001. May 3, 1904. Mohler. Carburetor for hydrocarbon engines.
766,530. Aug. 2, 1904. Salisbury. Apparatus for generation of gas.
776,982. Dec. 6, 1904. Anderson. Carbureting apparatus for explosive engines.
854,096. May 21, 1907. Levering. Gas engine.
862,877. Aug. 6, 1907. Bacon. Explosive engine.
900,083. Oct. 6, 1908. ———. Gas engine.
916,999. Apr. 6, 1909. Chambers. Air heater for gasoline engines.
920,167. May 4, 1909. McIntyre. Internal-combustion engine.
946,239. Jan. 11, 1910. Low et al. Internal-combustion engine.
967,117. Aug. 9, 1910. Durand. Means for cooling the cylinders of internal-combustion engines.
968,002. Aug. 23, 1910. Utz. Induction conduit for explosion engines.
971,034. Sept. 27, 1910. Fuller. Air intake for carburetors.
972,547. Oct. 11, 1910. Law. Gas engine.
986,357. Mar. 7, 1911. Bullert. Hot-air intake.
990,741. Apr. 25, 1911. Jacobs. Fuel feeding means for explosive engines.
*994,658. June 6, 1911. Reichenbach. Carbureting system.
998,124. July 18, 1911. Scripps. Intake manifold.
1,032,937. July 16, 1912. Pierce. Carburetor heater.
1,035,614. Aug. 13, 1912. Low et al. Vaporizing device for explosive engines.
1,048,576. Dec. 31, 1912. Page. Heating device for carburetors.
1,050,625. Jan. 14, 1913. Dortch. Internal-combustion engine.
*1,067,906. July 22, 1913. Esnault et al. Device for heating the carburetors of combustion engines and more particularly for flying-machine engines.
1,078,919. Nov. 18, 1913. Hall. Internal-combustion engine.
1,083,673. Jan. 6, 1914. Ellis. Internal-combustion engine.
1,098,756. Apr. 21, 1914. Beasley. Device for heating charges for explosive engines.
1,099,271. June 9, 1914. Sykora. Internal-combustion engine.
1,099,842. June 9, 1914. Cobb. Manifold construction for explosive engines.
1,099,862. June 9, 1914. Schroder. Method of operating internal-combustion engines and preheating device therefor.
1,101,865. June 23, 1914. Weaver. Fuel heater for internal-combustion engines.
*1,101,913. June 30, 1914. Fay. Internal-combustion engine.
*1,103,451. July 14, 1914. Thorney. Combustion engine.
*1,105,017. July 28, 1914. Bassford. Explosive engine.
1,106,452. Aug. 11, 1914. Ittner. Gasoline vaporizer.
*1,106,881. Aug. 11, 1914. Marnyama. Internal-combustion engine.
1,109,628. Sept. 1, 1914. Hallett. Rotary valve for explosive engines.
1,110,724. Sept. 15, 1914. Stewart. Carbureting means for use with heavy fuels.
1,112,589. Oct. 6, 1914. Ashmusen. Internal-combustion engine.
1,124,157. Jan. 5, 1915. Low. Internal-combustion engine using liquid fuel.
1,124,916. Jan. 12, 1915. Knudson. Manifold for internal-combustion engines.
1,125,446. Jan. 19, 1915. Beasley. Device for heating charges for explosive engines.
1,131,016. Mar. 9, 1915. Thornton et al. Air-heating device for explosive engines.
1,133,712. Mar. 30, 1915. Doyle. Cooling system.
*1,133,845. Mar. 30, 1915. Farnsworth. Explosive engine.
1,134,667. Apr. 6, 1915. Brooke. Internal-combustion engine.
1,135,074. Apr. 13, 1915. Taylor et al. Explosion engine.
1,135,113. Apr. 13, 1915. Hitchcock. Vapor heater for internal-combustion engines.
*1,137,057. Apr. 27, 1915. Halliday. Heavy-oil carbureting system for internal-combustion engines.
1,142,090. June 8, 1915. Griesbach. Vaporizer for internal-combustion engines.
1,149,710. Aug. 10, 1915. Beck. Heavy-oil carburetor for explosive engines.
1,151,503. Aug. 24, 1915. Wilesmith. Apparatus for heating the combustible charges of internal-combustion engines.
1,152,744. Sept. 7, 1915. McNutt. Revaporizer for internal-combustion engines.
1,159,446. Nov. 9, 1915. Watts. Carburetor.

1,160,192. Nov. 16, 1915. Nelson. Carburetor warmer.
1,168,111. Jan. 11, 1915. Pope. Fuel-heating apparatus for internal-combustion engines.
1,170,337. Feb. 1, 1916. Robinson et al. Air heater for carburetors.
*1,171,145. Feb. 8, 1915. Lachs. Carburetor.
1,178,276. Apr. 4, 1916. Straubel. Fuel-heating device for internal-combustion engines.
*1,178,972. Apr. 11, 1916. Tracy. Charge-forming device for internal-combustion engines.
1,180,176. Apr. 18, 1916. Moreton. Carbureting apparatus.
1,190,129. July 4, 1916. DuBois. Carburetor heater.
*1,190,592. July 11, 1916. Roraback. Manifold for gas engines.

SUBCLASS 123, CHARGE-FORMING DEVICES, GOVERNOR-CONTROLLED.

371,849. Oct. 18, 1887. Lister et al. Petroleum motor.
397,517. Feb. 12, 1889. Priestman. Method of working hydrocarbureted air engines.
509,462. Nov. 28, 1893. Caps. Carburetor for gas engines.
*552,263. Dec. 31, 1895. Roth. Generator for gas engines.
580,387. Apr. 13, 1897. Ellis. Explosive engine.
*583,503. June 1, 1897. Raymond. Gas engine.
*596,809. Jan. 4, 1898. Guyer. Gas engine.
*614,114. Nov. 15, 1898. Lefebre. Oil or similar motor.
638,440. Dec. 5, 1899. Brillie. Combined distributor and regulator for explosive engines.
*659,095. Oct. 2, 1900. Olsen. Gasoline engine.
*671,714. Apr. 9, 1901. Wolfe. Governing device for gasoline engines.
686,554. Nov. 12, 1901. Stearns. Speed regulator for explosive engines.
*709,126. Sept. 16, 1902. Vanduzen. Vaporizing device for explosive engines.
722,671. Mar. 17, 1903. Burger. Gas engine.
*722,672. Mar. 17, 1903. Burger. Valve for gas engines.
*729,377. May 26, 1903. Meister et al. Combined governor and gas and air mixer for explosive engines.
731,999. June 23, 1903. Hagan. Carburetor and governor for hydrocarbon engines.
*734,421. July 21, 1903. Krebs. Fuel governor for oil engines.
*735,483. Aug. 4, 1903. Hydrocarbon mixer and regulator for engines.
*779,490. Jan. 10, 1905. McKaig. Mixing apparatus for explosion or gasoline engines.
*782,471. Feb. 14, 1905. Sterne et al. Internal-combustion engine.
*788,748. May 2, 1905. Bauer. Gas and oil engine.
*794,192. July 11, 1905. Seal. Internal-combustion engine.
806,512. Dec. 5, 1905. Abraham. Carburetor for hydrocarbon engines.
863,916. Aug. 20, 1907. Gronvelle et al. Speed regulator for internal-combustion engines.
*876,519. Jan. 14, 1908. Brothers. Charge forming device for internal combustion engines.
*885,598. Apr. 21, 1908. Frost. Internal-combustion engine.
904,960. Nov. 24, 1908. Hukle. Carburetor and mixer.
*935,218. Apr. 19, 1910. Smith. Carburetor.
970,429. Sept. 13, 1910. Davis. Carburetor for internal-combustion engines.
1,075,635. Oct. 14, 1913. Elkin. Carburetor.
*1,076,268. Oct. 21, 1913. Carpenter. Carburetor regulating mechanism.
*1,128,508. Jan. 5, 1915. Farrell. Carburetor.
1,133,679. Mar. 30, 1915. Taylor. Governor for internal-combustion engine.
*1,151,156. Aug. 24, 1915. Bingaman. Carburetor.
*1,154,530. Sept. 21, 1915. Merriam et al. Carburetor.
*1,155,094. Sept. 28, 1915. Podlesak. Mixture-reducing device and speed governor.
1,170,199. Feb. 1, 1916. Ver Planck. Governing mechanism for internal-combustion engines.

SUBCLASS 124, CHARGE-FORMING DEVICES, AUTOMATIC DILUTION.

642,871. Feb. 6, 1900. New. Heavy oil engine.
*751,434. Feb. 2, 1904. Napier et al. Carburetor for petrol motors.
823,185. June 12, 1906. Miller. Air valve for gas engines.

*831,832. Sept. 25, 1906. Coffin. Carburetor for hydrocarbon engines.
*838,085. Dec. 11, 1906. Cook. Carburetor for explosive engines.
*844,894. Feb. 19, 1907. Renault. Carburetor.
871,861. Nov. 19, 1907. Reineking. Air intake regulator for carburetors.
878,077. Feb. 4, 1908. Longuemare.
891,936. June 30, 1908. Jordanet et al. Carburetor.
894,286. July 28, 1908. Reineking. Air intake and regulator for carburetors.
906,039. Dec. 8, 1908. Le Plain. Automatic double air inlet for carburetors.
939,549. Nov. 9, 1909. Reineking. Reed air-intake regulator for carburetors.
943,996. Dec. 21, 1909. Reineking. Reed air-intake regulator for carburetors.
*997,282. July 4, 1911. Bowers. Carburetor.
1,050,200. Jan. 14, 1913. Aubery. Auxiliary air inlet device for internal-combustion engines.
1,086,112. Feb. 3, 1914. Winkler. Mixture regulator.
1,088,302. Feb. 24, 1914. Scudder. Automatic air valve for gas manifolds.
1,117,676. Nov. 17, 1914. Johnson. Automatic carburetor air supply regulator.
1,117,993. Nov. 24, 1914. Frazier. Automatic valve.
1,142,194. June 8, 1915. Morgan. Auxiliary valve for internal-combustion engines.
1,142,779. June 8, 1915. Umbarger. Gas-saving appliance.
*1,143,230. June 15, 1915. Root. Air-controlled device for gas engines.
1,168,309. Jan. 18, 1916. Keiffer. Auxiliary valve for internal-combustion engines.
1,171,457. Feb. 15, 1916. Oldham. Air controller for explosive engines.
*1,189,786. July 4, 1916. Byrnes. Thermostatic-control device for explosive engines.

SUBCLASS 125, CHARGE-FORMING DEVICES, OIL INTERRUPTING.

370,242. Sept. 20, 1887. Charter. Gas engine.

SUBCLASS 126, CHARGE-FORMING DEVICES, MOVABLE CARRIER.

550,410. Nov. 26, 1895. Hardina. Gas generator.
712,42. Nov. 4, 1902. Jeffery. Carburetor for explosive engines.
1,184,779. May 30, 1916. Shaw. Aerating fuel pump for explosive motors.

SUBCLASS 127, CHARGE-FORMING DEVICES, MULTIPLE OIL SUPPLY.

*1,105,016. July 28, 1914. Bassford. Explosive engine.
*1,110,438. Sept. 15, 1914. Gore. Internal-combustion engine.
1,115,967. Nov. 3, 1914. Papenbrok. Attachment for explosive engines.
1,121,135. Dec. 15, 1914. Schmid. Internal-combustion engine.
1,180,169. Apr. 18, 1916. Marhenke. Fuel-injecting device for internal-combustion engines.

SUBCLASS 128, CHARGE-FORMING DEVICES, CONSTANT OIL SUPPLY.

665,665. Jan. 8, 1901. Solomon. Gas engine.
670,945. Apr. 2, 1901. Ash. Vaporizing device for gas engines.
731,001. June 16, 1903. Williams. Explosive engine.
1,189,388. July 4, 1916. Askew. Internal-combustion engine.

SUBCLASS 129, CHARGE-FORMING DEVICES, VALVE-CONTROLLED OIL.

*418,029. Dec. 24, 1889. Korting. Automatic valve and ignitor for gas engines.
*598,832. Feb. 8, 1898. Winton. Explosive engine.
*748,990. Jan. 5, 1904. Segner. Feed regulator for gasoline engines.
*795,273. July 25, 1905. Essner. Carburetor.
*868,392. Oct. 15, 1907. Allsop. Petroleum engine.
*877,753. Jan. 28, 1908. Ash. Gas engine.
*887,422. May 12, 1908. Power. Mixing valve for internal-combustion engines.

SUBCLASS 130, CHARGE-FORMING DEVICES, VALVE-CONTROLLED OIL, POSITIVELY-OPERATED.

*517,344. Mar. 27, 1894. Lambert. Carburetor.
731,547. June 23, 1903. Corne et al. Carburetor for explosion motors.
827,303. July 31, 1906. Goodspeed. Valve gear for internal-combustion engines.
1,159,178. Nov. 2, 1915. Cook. Injector.

SUBCLASS 133, CHARGE-FORMING DEVICES, OIL-EVAPORATING.

89,448. Aug. 4, 1863. Kratze. Improvements in gas engines.
331,078. Nov. 24, 1885. Nash. Explosive-vapor engine.
335,462. Feb. 2, 1886. Lenoir. Gas engine.
480,535. Aug. 9, 1892. Weatherhogg. Petroleum or similar engine.
577,189. Feb. 16, 1897. Lewis. Vapor engine.
606,504. June 28, 1898. Bonton. Explosive engine.
*635,298. Oct. 24, 1899. Canda. Carburetor.
784,076. Mar. 14, 1905. Hiltscher. Carburetor for gas engines.
785,808. Mar. 28, 1905. Keating. Carburetor for hydrocarbon engines.
*844,900. Feb. 19, 1907. Smith. Carburetor.
*858,046. June 25, 1907. Westerndorp. Vaporizer for explosive engines.
868,246. Oct. 15, 1907. Bates. Generating oil gas for explosive engines.
879,659. Feb. 18, 1908. Low. Hydrocarbon motor.
934,599. Sept. 21, 1909. Flint. Apparatus for vaporizing hydrocarbon oils.
1,110,807. Sept. 15, 1914. Lucke. Vaporizer for internal-combustion engines.
1,111,140. Sept. 22, 1914. Deering. Gas-generating system.
1,156,780. Oct. 12, 1915. Honnold. Combined fuel and cooling system for vehicle engines.

SUBCLASS 134, CHARGE-FORMING DEVICES, OIL-EVAPORATING, SUBMERGED AIR SUPPLY.

499,597. June 13, 1893. Salomon. Carburetor.
642,562. Jan. 30, 1900. Probert. Vaporizer for gas engines.

SUBCLASS 135, CHARGE-FORMING DEVICES, EXTENDED OIL FILM.

406,540. July 9, 1889. Schlitz. Hydrocarbon engine.
651,017. June 5, 1900. Marne. Carburetor.
685,504. Oct. 29, 1901. Bole et al. Carburetor.
*947,633. Jan. 25, 1910. Brady. Internal-combustion engine.
1,185,224. May 30, 1916. Manley. Internal-combustion engine.

SUBCLASS 136, CHARGE-FORMING DEVICES, OIL-FEEDING.

200,970. Mar. 5, 1878. Brady. Improvement in gas engines.
496,751. May 2, 1893. Schumm. Apparatus for supplying oil or other liquids under pressure.
509,830. Nov. 28, 1893. Seck. Hydrocarbon motor.
645,458. Mar. 13, 1900. ———. Oil-distributing means for oil engines.
652,470. June 26, 1900. Cascaden et al. Explosive engines.
686,287. Nov. 12, 1901. Grenter. Feed mechanism for gasoline or like engines.
*709,428. Sept. 16, 1902. Warring. Hydrocarbon feeder for explosive engines.
752,181. Feb. 16, 1904. Ronan. Raw liquid fuel measurer for explosive engines.
817,671. Apr. 10, 1906. Rosseau et al. Oil engine.
*849,048. Apr. 2, 1907. Cable. Fuel feed for hydrocarbon engines.
890,522. June 9, 1908. MacKaskie. Charge-supplying means for internal-combustion engines.
933,325. Sept. 7, 1909. McCartey. Fuel feeder for internal-combustion engine.
973,880. Oct. 25, 1910. Rammen. Auxiliary liquid hydrocarbon tank for internal-combustion engine.
997,136. July 4, 1911. Johnston. Device for supplying oil to internal-combustion engine.
1,002,626. Sept. 5, 1911. Baltezor. Internal-combustion engine.
1,011,931. Dec. 19, 1911. Farquharson. Force-feed carburetor.
1,036,424. Aug. 20, 1912. Bellem et al. Pump feeding mechanism for internal-combustion engines.
1,049,815. Jan. 7, 1913. Day et al. Starting mechanism for internal-combustion engines.
1,095,763. May 5, 1914. Winton. Fuel-supply system for automobiles.
*1,106,115. Aug. 4, 1914. Schneider. Charge-forming device for internal-combustion engines.
1,112,975. Oct. 6, 1914. Bush. Oil-distributing mechanism.
1,154,994. Sept. 28, 1915. Lasche. Fuel-supply system for engines.
1,189,096. June 27, 1916. Grunwald. Pumping apparatus.

SUBCLASS 137, CHARGE-FORMING DEVICES, OIL FEEDING, RECIPROCATING.

650,266. May 22, 1900. McDuff. Feed for explosion engines.
664,981. Jan. 1, 1901. Thornton et al. Oil-feeding device for explosion engines.
722,431. Mar. 10, 1903. Packard. Hydrocarbon motor.
880,502. Mar. 3, 1908. Boyler. Carburetor for explosion engines.

SUBCLASS 138, CHARGE-FORMING DEVICES, OIL FEEDING, ROTARY.

580,444. Apr. 13, 1897. Baker. Gas engine.
626,840. June 13, 1899. MacCallum. Apparatus for injecting fuel into combustion chambers of internal-combustion engines.
770,731. Sept. 27, 1904. Anderson. Feed valve for explosive engines.
1,177,216. Mar. 28, 1916. Summers. Carburetor.
1,180,334. Apr. 25, 1916. Summers. Carburetor.
1,188,572. June 27, 1916. Summers. Carburetor.

SUBCLASS 139, CHARGE-FORMING DEVICES, PUMPS.

774,034. Nov. 1, 1904. Brillie. Fuel-feeding mechanism for internal-combustion motors.
1,011,931. Dec. 19, 1911. Farquharson. Force-feed carburetor.

SUBCLASS 140, CHARGE-FORMING DEVICES, GOVERNOR CONTROL.

970,429. Sept. 13, 1910. Davis. Carburetor for internal-combustion engines.

SUBCLASS 141, CHARGE-FORMING DEVICES, MIXING DEVICES.

650,736. May 29, 1900. Sutton. Explosive engine.
* 755,093. Mar. 22, 1904. Wright. Vaporizer for hydrocarbon engines.
* 868,707. Oct. 22, 1907. Schneider. Carburetor.
948,402. Feb. 8, 1910. Preston. Vaporizing and mixing device.
* 970,251. Sept. 13, 1910. Martha. Internal-combustion engine.
1,012,380. Dec. 19, 1911. Loose. Mixer for internal-combustion engines.
1,031,758. July 9, 1912. Westaway. Mixer for internal-combustion engines or the like.
1,051,369. Jan. 21, 1913. Heath. Charge-mixing device for gas engines.
1,103,931. July 21, 1914. Bennett. Intake manifold.

SUBCLASS 142, CHARGE-FORMING DEVICES, SAFETY DEVICES.

434,695. Aug. 19, 1890. Barrett et al. Gas or vapor engine attachment.
928,710. July 20, 1909. Svagell. Carburetor.

SUBCLASS 180, COMBUSTIBLE MIXTURE SUPPLY STARTING DEVICES.

882,597. Mar. 24, 1908. Walker. Starting device for internal-combustion engines.
892,544. July 7, 1908. Odenbrett. Engine starter.
920,515. May 4, 1909. Nagora. Starting device for explosive engines.
921,995. May 18, 1909. Jackson. Auxiliary starting device for automobiles.
960,690. June 7, 1910. Pagelsen. Starting device for explosive engines.
969,815. Sept. 13, 1910. Walker. Starting device for internal-combustion engines.
983,168. Jan. 31, 1911. Sackrider. Starter for internal-combustion engines.
985,011. Feb. 21, 1911. Daniels et al. Gas-engine starter.
990,135. Apr. 18, 1911. Hunt. Engine starter.
1,000,595. Aug. 15, 1911. Gibbon. Starting device for internal-combustion engines.
*1,014,988. Jan. 16, 1912. Hinkley. Carburetor.
*1,039,229. Sept. 24, 1912. Walker. Carburetor.
1,051,122. Jan. 21, 1913. Krayer. Means for supplying explosive mixture to explosive engines.
1,161,536. May 13, 1913. Fuhrer. Gasoline engine starter.
1,080,773. Dec. 9, 1913. Myers. Engine starter.
1,081,534. Dec. 16, 1913. Priming attachment for explosive engines.
1,088,792. Mar. 3, 1914. Perkins. Explosive engine priming mechanism.
1,100,091. June 16, 1914. Pennington. Engine starter.

1,102,091. June 30, 1914. Shockley et al. Starting mechanism for internal-combustion engines.
1,102,475. July 7, 1914. Cochran. Means for creating and supplying explosive mixture to explosive engines.
1,117,141. Nov. 10, 1914. Smith. Explosive mixture heater and diluter.
1,157,868. Oct. 26, 1915. Higgins. Carburetor.
1,164,357. Dec. 14, 1915. Kaufmann. Primer.

CLASS 261, GAS AND LIQUID CONTACT APPARATUS.

SUBCLASS 10, WITH HEATING OR COOLING, INTERCHANGING.

853,653. May 14, 1907. Stewart. Gasifier.

SUBCLASS 12, WITH HEATING OR COOLING, HEATING.

660,954. Oct. 30, 1900. Hayes. Fuel vaporizer and mixer for explosive engines and other uses.
672,500. Apr. 23, 1901. Van Duzen. Vaporizing device for crude oil explosive engines.
*733,695. July 14, 1903. Charron & Gerardot. Pulverizing carburetor for petroleum motors.
*817,051. Apr. 3, 1906. Dorman. Carburetor for explosive motors and engines.
909,897. Jan. 19, 1909. Hertzberg. External electrical vaporizer for combustion engines.

SUBCLASS 13, WITH HEATING OR COOLING, HEATING, GAS.

*668,953. Feb. 26, 1901. Dawson. Vaporizing device for explosive engines.
*Re. 12,322. Feb. 28, 1905. Dawson. Vaporizing device for explosive engines.

SUBCLASS 15, WITH HEATING OR COOLING, HEATING, LIQUID.

*804,589. Nov. 14, 1905. Enrico. Carburetor for explosion motors.

SUBCLASS 26, FLUID DISTRIBUTION, PUMPING, AUTOMATIC CONTROL.

270,927. Jan. 23, 1883. Brayton. Regulating the supply of oil to vapor engines.

SUBCLASS 38, FLUID DISTRIBUTION, VALVED.

*993,516. May 30, 1911. Gentle. Carburetor.
996,018. June 20, 1911. Heine. Carburetor and relief valve for explosive engines.

SUBCLASS 41, FLUID DISTRIBUTION, VALVED, MULTIPLE JET, PROGRESSIVE.

*818,858. Apr. 24, 1906. Renault. Carburetor.

SUBCLASS 44, FLUID DISTRIBUTION, VALVED, MULTIPLE VALVES, CONNECTED.

*751,913. Feb. 9, 1904. Haynes and Apperson. Carbureting device for explosive engines.

SUBCLASS 50, FLUID DISTRIBUTION, VALVED, MULTIPLE VALVES, CONNECTED, LIQUID INLET, WITH GAS INLET.

*687,840. Dec. 3, 1901. Krasten: Fuel-mixing and charge-controlling apparatus for hydrocarbon explosive engines.
*970,251. Sept. 13, 1910. Martha. Internal-combustion engine.
*1,114,222. Oct. 20, 1914. Bingham. Carburetor.

SUBCLASS 51, FLUID DISTRIBUTION, VALVED, MULTIPLE VALVES, CONNECTED, LIQUID INLET, WITH GAS OUTLET.

*627,372. June 20, 1899. Winton. Fuel feeder or regulator for explosive engines.
*635,298. Oct. 24, 1899. Canda. Carburetor.
686,287. Nov. 12, 1901. Greuter. Feed mechanism for gasoline or like engines.
*868,707. Oct. 22, 1907. Schneider. Carburetor.
*906,671. Dec. 15, 1908. Abernethy. Carburetor for explosive engines.

SUBCLASS 54, FLUID DISTRIBUTION, VALVED, MULTIPLE VALVES, GAS BY-PASS.

891,986. June 30, 1908. Jordanet et al. Carburetor.

SUBCLASS 59, FLUID DISTRIBUTION, VALVED, MULTIPLE VALVES, LIQUID INLET, WITH GAS INLET.

675,424. June 4, 1901. Sturtevant. Carburetor for explosive engines.

SUBCLASS 62, FLUID DISTRIBUTION, VALVED, CONTACT SPACE.

*811,897. Jan. 30, 1906. Hibbard. Vaporizer.

SUBCLASS 65, FLUID DISTRIBUTION, VALVED, GAS OUTLET.

731,001. June 16, 1903. Williams. Explosive engine.

SUBCLASS 67, FLUID DISTRIBUTION, VALVED, LIQUID INLET, PLURAL

*692,444. Feb. 4, 1902. Harris. Carburetor for explosive engines.

SUBCLASS 68, FLUID DISTRIBUTION, VALVED, LIQUID INLET, PLURAL, FLOAT AND MANUAL.

*844,900. Feb. 19, 1907. Smith. Carburetor.

SUBCLASS 81, CONTACT DEVICES, RECIPROCATING.

862,856. Aug. 6, 1907. Tygard. Vibrative liquid atomizer and mixer.

SUBCLASS 84, CONTACT DEVICES, ROTATING, IMPELLER.

610,040. Aug. 30, 1898. Ford. Carburetor.
1,114,764. Oct. 27, 1914. Hopkins. Fluid-fuel feeder.

SUBCLASS 104, CONTACT DEVICES, POROUS SHEETS, SURFACE CONTACT, CAPILLARY FEED.

89,448. Aug. 4, 1868. Kratze. Improvement in gas engines.

SUBCLASS 105, CONTACT DEVICES, POROUS SHEET, GAS FLOW, CONTROL.

986,605. Mar. 14, 1911. Svagel & Padfield. Carburetor for gas and gasoline engines.

CLASS 60, MISCELLANEOUS HEAT-ENGINE PLANTS.

SUBCLASS 4, ROTARY ENGINE.

1,185,982. June 6, 1916. Casro. Fluid mixer and power generator for rotary engine.

SUBCLASS 36, COMBUSTION PRODUCTS INJECTED.

1,024,079. Apr. 23, 1912. Jennings. Internal-combustion generator.

LIST NO. 4.

SELECTED CROSS-REFERENCE PATENTS FROM THE SEARCHED SUBCLASSES, WITH PATENTS WHICH APPEAR IN EITHER OF THE THREE PREVIOUS LISTS OMITTED.

3,597. May 25, 1844. Perry. Gas engine.
4,800. Oct. 7, 1846. Perry. Gas engine.
168,623. Oct. 11, 1875. Daimler. Air and gas engine.
195,585. Sept. 25, 1877. Dreckmann. Gas engines.
258,884. June 6, 1882. Burritt. Gas motor engine.
260,513. July 4, 1882. Wigmore. Gas motor engine.
301,009. June 24, 1884. Rachholz. Gas engine.
322,062. July 14, 1885. Nash. Combined fuel converter and gas engine.

331,080. Nov. 24, 1885. Nash. Method of operating gas engine.
333,838. Jan. 5, 1886. Delamare et al. Gas engine.
339,225. Apr. 6, 1886. Sintz. Gas engine.
340,453. Apr. 20, 1886. Nash. Gas engine.
347,469. Aug. 17, 1886. Clark. Gas engine.
347,656. Aug. 17, 1886. Smith. Gas engine.
383,775. May 29, 1888. Sintz. Gas engine.
402,549. Apr. 30, 1889. Wilcox. Gas or air engine.
414,173. Oct. 29, 1889. Stevens. Combined gas and compressed air engine.
415,446. Nov. 19, 1889. Charter. Hydrocarbon or gas engine.
*417,924. Dec. 24, 1889. Korting. Method of automatic ignition in gas engines.
421,473. Feb. 18, 1890. Baker. Gas engine.
424,000. Mar. 25, 1890. Hibbard. Rotary gas engine.
*433,806. Aug. 5, 1890. Otto. Motor engine worked by oil vapor.
*433,807. Aug. 5, 1890. Otto. Motor engine worked by oil vapor.
436,986. Sept. 23, 1890. Eisenhuth. Explosive engine.
439,200. Oct. 28, 1890. Shanck. Gas engine.
439,702. Nov. 4, 1890. Stuart. Petroleum engine or motor.
*448,386. Mar. 17, 1891. Vanduzen. Gas or gasoline engine.
451,621. May 5, 1891. Lewis. Gas engine.
455,888. July 7, 1891. Charter. Gas engine.
*456,284. July 21, 1891. Coffield et al. Gas engine.
460,070. Sept. 22, 1891. Hobbs. Rotary gas engine.
*482,202. Sept. 6, 1892. Schumm. Gas or oil motor engine.
498,700. May 30, 1893. Walls. Gas engine.
506,817. Oct. 17, 1893. Hobbs. Gas engine.
511,535. Dec. 26, 1893. Lewis. Gas engine.
511,855. Jan. 2, 1894. Mann. Electrohydrocarbon engine.
522,712. July 10, 1894. Hirsch. Gas engine.
*523,511. July 24, 1894. Campell. Oil engine.
525,651. Sept. 4, 1894. Grant. Gas engine.
*525,857. Sept. 11, 1894. McGeorge. Gas engine.
532,099. Jan. 8, 1895. Robinson. Gas or vapor and air mixing and spraying device.
*532,100. Jan. 8, 1895. Robinson. Vaporizing and ignition device.
532,412. Jan. 8, 1895. Bilbault. Gas or petroleum engine.
*534,354. Feb. 19, 1895. Weber. Gas engine.
536,029. Mar. 19, 1895. Gill. Gas engine.
537,253. Apr. 9, 1895. Van Zandt. Gas engine.
*537,370. Apr. 9, 1895. Walls. Gas engine.
*539,710. May 21, 1895. Sintz. Gas engine.
541,778. June 25, 1895. Mead. Gas engine.
543,094. July 23, 1895. Hopkins. Motor for bicycles.
*548,922. Oct. 29, 1895. Norman. Gas and oil engine.
550,163. Nov. 19, 1895. Durand. Compressed-air motor.
550,266. Nov. 26, 1895. Froelich. Gas engine.
*550,451. Nov. 26, 1895. Lanson et al. Gas engine.
*550,785. Dec. 3, 1895. Friend. Hydrocarbon motor.
555,873. Feb. 25, 1896. Henriod-Schweizer. Petroleum motor.
560,149. May 12, 1896. Rober. Vapor engine.
562,230. June 16, 1896. Mex. Petroleum motor.
563,249. July 7, 1896. Baker. Gas engine.
564,576. July 21, 1896. Altham. Oil engine.
564,577. July 21, 1896. Altham. Oil engine.
565,786. Aug. 11, 1896. Olds et al. Gas or vapor engine.
569,530. Oct. 13, 1896. Winter. Gas engine.
571,534. Nov. 17, 1896. Lewis. Gas engine.
*574,183. Dec. 29, 1896. Underwood. Mixer for gas engines.
574,535. Jan. 5, 1897. Grohmann. Gas engine.
579,554. Mar. 23, 1897. Blum. Gas motor.
582,108. May 4, 1897. Winton. Explosive engine.
*584,666. June 15, 1897. Bollée. Motor vehicle.
*588,466. Aug. 17, 1897. Pace. Combustion engine.
*595,043. Dec. 7, 1897. Chase. Gas engine.
*595,552. Dec. 14, 1897. Banki et al. Gasoline motor.
*596,809. Jan. 4, 1898. Guyer. Gas engine.

597,389. Jan. 18, 1898. Bullis. Gasoline engine.
598,025. Jan. 25, 1898. Simark. Gas engine.
599,235. Feb. 15, 1898. Hider. Explosive engine.
*599,375. Feb. 22, 1898. White. Gas engine.
*599,376. Feb. 22, 1898. White. Gas-engine attachment.
*600,147. Mar. 8, 1898. Halvorson. Explosive engine.
602,556. Apr. 19, 1898. Dayle. Gas or gasoline engine.
603,318. May 3, 1898. Clover. Oil gas motor.
*603,986. May 10, 1898. Henriod. Explosive engine.
*608,968. Aug. 8, 1898. Morava. Gas or oil motor for bicycles.
*610,460. Sept. 6, 1898. Petrot. Self-propelling carriage.
615,978. Dec. 13, 1898. Fielding. Internal-combustion motor.
617,022. Jan. 3, 1899. Irgens et al. Means for converting heat into motoric force.
618,972. Feb. 7, 1899. Alsop. Gas engines.
*619,776. Feb. 21, 1899. Murray. Gas engine.
620,602. Mar. 7, 1899. Maxim. Explosive engine.
622,798. Nov. 11, 1899. Fagerstrom. Regulating device for petroleum motor.
623,567. Apr. 25, 1899. Secor. Speed regulator for explosive engines.
*624,594. May 9, 1899. Wilkinson. Motive-power mechanism.
*626,121. May 30, 1899. Winton. Speed regulator for explosive engine.
*627,219. June 20, 1899. Woolf. Air and gas engine.
*627,359. June 20, 1899. Steele. Automobile vehicle.
632,474. Sept. 5, 1899. Sangster. Motor-driven vehicle.
*632,917. Sept. 12, 1899. Dallenbach. Explosive engine.
*635,218. Oct. 17, 1899. Winton. Oil valve for gasoline engine.
*636,048. Oct. 31, 1899. Korsmeyer. Gasoline or gas engine.
638,331. Dec. 5, 1899. Grant. Motor vehicle.
*640,394. Jan. 2, 1900. Lewis. Gas engine.
*640,674. Jan. 2, 1900. Lewis. Explosive engine.
640,890. Jan. 9, 1900. Eisenburth. Air and gas engine.
641,727. Jan. 23, 1900. Robertson et al. Gasoline engine.
652,544. June 26, 1900. Miller. Gas engine.
*658,127. Sept. 18, 1900. Simmonds. Gas or gasoline engine.
*658,367. Sept. 25, 1900. Haynes et al. Explosive engine.
660,129. Oct. 23, 1900. Standish. Rotary explosive motor.
662,169. Nov. 20, 1900. Gender. Engine operated by fluid under pressure.
667,908. Feb. 12, 1901. Hatcher. Speed regulator for explosive engine.
*670,803. Mar. 26, 1901. McMahon. Gas engine.
673,109. Apr. 30, 1901. Brouder. Gas engine.
673,110. Apr. 30, 1901. Bronder. Motor vehicle.
681,287. Aug. 27, 1901. Worth. Speed regulator for explosive engines.
*682,606. Sept. 12, 1901. Duryea. Explosive engine for motor vehicle.
*682,682. Sept. 17, 1901. Hafelfinger. Motor bicycle.
*684,011. Oct. 8, 1901. Valentynowicz. Explosive engine.
685,722. Oct. 29, 1901. Marrder. Rotary explosive engine.
*690,481. Jan. 7, 1902. Sweet. Explosive engine.
702,374. June 10, 1902. McCall. Air superheater or carburetor.
703,511. July 1, 1902. Wood. Oil vapor engine.
706,711. Aug. 12, 1902. Andres. Multiple-cylinder explosive engine.
707,793. Aug. 26, 1902. McKaig. Gasoline engine.
714,353. Nov. 25, 1902. Anderson et al. Combination hot-air and gas engine.
723,844. Mar. 31, 1903. Dingman. Gas engine.
724,763. Apr. 7, 1903. Wallmann. Means for vaporizing water.
729,984. June 2, 1903. Wallmann. Compound internal-combustion engine.
737,069. Aug. 25, 1903. Brown. Engine worked by oil vapor or gas.
741,824. Oct. 20, 1903. Pehrsson. Gasoline engine.
742,799. Oct. 27, 1903. Ostergren. Internal-combustion engine.
*746,701. Dec. 15, 1903. Hibbard. Explosive engine.
748,509. Dec. 29, 1903. Klocksiem. Valve gear for hydrocarbon traction engines.
757,632. Apr. 19, 1904. Palmer. Explosive engine.
759,011. May 3, 1904. Pfister. Gas generator for explosive engine.
*760,333. May 17, 1904. Hardenbrook et al. Valve gear for explosive engine.
763,039. June 21, 1904. Bates. Oil-gas generator.
763,773. June 28, 1904. Marlitt. Rotary explosive motor.
*765,814. July 26, 1904. Chamberlin. Explosive engine.

772,181. Oct. 11, 1904. Clandel. Apparatus for the manufacture of gas.
775,243. Nov. 15, 1904. Losch. Explosive engine.
776,800. Dec. 6, 1904. Rochow. Explosive engine.
776,982. Dec. 6, 1904. Anderson. Carbureting apparatus for explosive engines.
*778,154. Dec. 20, 1904. Sweeder. Gas engine.
787,254. Apr. 11, 1905. Young. Rotary carburetor.
795,422. July 25, 1905. Thomson. Means for preventing pounding in internal-combustion engine.
796,686. Aug. 8, 1905. Westendorp. Explosion engine.
801,927. Oct. 17, 1905. Smith. Fuel-mixing device for gas engines.
*806,189. Dec. 5, 1905. Hayes. Device for vaporizing liquids.
*806,760. Dec. 5, 1905. Van de Putte. Injecting and mixing device for hydrocarbon motors.
809,451. Jan. 9, 1906. Kyle et al. Double-acting explosive engine.
*812,371. Feb. 13, 1906. Secor. Speed regulator for explosive engine.
*816,109. Mar. 27, 1906. Lutz. Explosive engine.
823,039. June 12, 1906. Ells. Valve gear for explosive engine.
*825,531. July 10, 1906. Franquist. Controller for motor vehicles.
828,352. Aug. 14, 1906. Trinkler. Internal-combustion engine for liquid combustible.
*835,773. Nov. 13, 1906. Brady. Internal-combustion engine.
*846,434. Mar. 5, 1907. Underwood. Internal-combustion engine.
848,607. Mar. 26, 1907. Thomson. Oil or gas engine.
848,891. Apr. 2, 1907. Ford. Speed controller and regulator for explosive engines.
849,578. Apr. 9, 1907. Shadall. Motor for rock drills and similar tools.
*856,760. June 11, 1907. Bense. Combustion engine.
857,730. June 25, 1907. Goodspeed. Internal-combustion engine.
*861,378. July 30. 1907. Mayer. Speed-regulating device for automobiles.
862,377. Aug. 6, 1907. Bacon. Explosive engine.
*866,002. Sept. 17, 1907. Dallenbach. Internal-combustion engine.
868,608. Oct. 15, 1907. Low, et al. Hydrocarbon motor.
*874,822. Dec. 24, 1907. Baird. Carburetor.
876,003. Jan. 7, 1908. Lawless. Internal-combustion engine.
877,730. Jan. 28, 1908. Palmer. Explosive engine.
878,932. Feb. 11, 1908. Brady. Vaporizing device for internal-combustion engines.
*879,884. Feb. 25, 1908. McClintock. Crude-oil engine.
880,704. Mar. 3, 1908. Wood. Gas engine.
*882,170. Mar. 17, 1908. Schmidt. Carburetor.
882,939. Mar. 24, 1908. Fricke, et al. Mixing valve for explosive engine.
886,519. May 5, 1908. Knickerbocker. Internal-combustion engine.
*886,760. May 5, 1908. Brush. Carbureting mechanism for internal-combustion engines.
*889,032. May 26. 1908. McClintock. Combined carburetor and governor for internal-combustion engine.
889,260. June 2, 1908. Poolesak, et al. Fuel-feeding device for internal-combustion hydrocarbon motors.
889, 528. June 2, 1908. Jeffery. Speed-controlling mechanism for automobile.
*891,064. June 16, 1908. Heathcock, et al. Engine governor.
*892,501. July 7, 1908. Cogswell. Internal-combustion engine.
898,230. Sept. 8, 1908. Lake. Gas engine.
903,902. Nov. 17, 1908. Simmons. Combustion engine.
904,267. Nov. 17, 1908. Korting, et al. Explosion petroleum engine.
907,879. Dec. 29, 1908. Reeves, et al. Balanced proportioning valve for explosive engine.
909,917. Jan. 19, 1909. Low. Electrically operated starting vaporizer for combustion engines.
922,009. May 18, 1909. Marquardt. Gasoline engine.
924,483. June 8, 1909. Manuel. Fuel feeder.
925,793. June 22, 1909. Atkins. Internal-combustion motor.
933,709. Sept. 7, 1909. Illy. Mixing attachment for internal-combustion engines.
933,907. Sept. 14, 1909. Illy. Combustion pressure generator, mixer, and engine.
942,070. Dec. 7, 1909. Higgins. Internal-combustion motor.
944,867. Dec. 28, 1909. Hunter. Carburetor.
946,780. Jan. 18, 1910. Johnston. Internal-combustion engine.

952,430. Mar. 15, 1910. Higgins. Method of operating oil engines.
961,059. June 7, 1910. Abbott. Gas engine.
964,410. July 12, 1910. Fox. Heater for carburetor.
970,937. Sept. 20, 1910. Merrett, et al. Internal-combustion engine.
979,667. Dec. 27, 1910. Harpster. Vaporizer for internal-combustion engine.
989,026. Apr. 11, 1911. Murphy. Fuel injector for internal-combustion engines.
*991,029. May 2, 1911. Scott. Internal-combustion engine.
*994,687. June 6, 1911. Nageborn. Carburetor.
*1,017,750. July 18, 1911. Scripps. Intake manifold.
1,018,372. Feb. 20, 1912. Hanchett. Mixer for gaseous fuel.
*1,022,808. Apr. 9, 1912. Troutt. Internal-combustion engine.
1,024,808. Apr. 23, 1912. Willoughby. Aeroplane-engine controlling mechanism.
*1,026,425. May 14, 1912. Barthel. Carburetor.
1,031,245. July 21, 1912. Chapin. Internal-combustion engine.
1,050,779. Jan. 14, 1913. Miller. Internal-combustion engine.
*1,054,728. Mar. 4, 1913. White et al. Power device.
1,058,591. Apr. 8, 1913. Jackson. Method and apparatus for operating petroleum explosive engines.
1,059,967. Apr. 29, 1913. Babbitt. Steam-supplied carburetor.
1,066,768. July 8, 1913. Vogt. Internal-combustion engine.
1,066,936. July 8, 1913. McKenzie. Means for supplying liquid fuel to internal-combustion engines.
*1,068,195. July 22, 1913. White et al. Power service.
1,068,880. July 29, 1913. Westaway. Vaporizing valve.
1,070,139. Aug. 12, 1913. Kessler. Explosive engine.
1,079,578. Nov. 25, 1913. Peterson. Internal-combustion engine.
1,079,950. Dec. 2, 1913. Norton. Vaporizing attachment.
1,081,228. Dec. 9, 1913. Fuchs. Fuel gasifier for internal-combustion engine.
1,085,425. Jan. 27, 1914. Hobe et al. Electrical primer.
1,086,634. Feb. 10, 1914. Wright. Hydrocarbon engine.
1,088,854. Mar. 3, 1914. Wadsworth. Fuel-feed system for engines with starter.
1,093,553. Apr. 14, 1914. Eberle. Process of supplying fuels which ignite with difficulty to internal-combustion engine.
1,096,056. May 12, 1914. Ray. Valve for explosive engines.
1,102,912. July 7, 1914. Harrington. Internal-combustion motor.
1,104,968. July 28, 1914. Crothers. Internal-combustion engine.
1,105,047. July 28, 1914. Thomson. Oil engine.
1,107,103. Aug. 11, 1914. Peaslee. Carburetor.
*1,107,636. Aug. 18, 1914. Westenderp. Hydrocarbon engine.
1,111,335. Sept. 22, 1914. Walden. Fuel-oil delivery system for motor vehicles.
1,112,124. Sept. 29, 1914. Dunton. Fluid-pressure means for forcing fuel into internal-combustion engines.
1,121,850. Dec. 22, 1914. Knesera. Internal-combustion engine.
*1,128,717. Feb. 16, 1915. Ottoway. Carburetor.
*1,130,915. Mar. 9, 1915. Mansbridge and Nash. Vaporizing attachment.
1,134,684. Apr. 6, 1915. Kramer. Internal-combustion engine.
*1,144,549. June 29, 1915. Kane. Carburetor for internal-combustion engines.
1,146,435. July 13, 1915. McVickar. Internal-combustion engine.
1,147,193. July 20, 1915. Sheppard. Primer.
1,149,296. Aug. 10, 1915. Scott & Sherman. Charge-forming device for explosive engines.
1,149,321. Aug. 10, 1915. Baker. Method of and apparatus for delivering liquid fuel to oil engines.
*1,149,597. Aug. 10, 1915. Riker. Regulating means for internal-combustion engines.
1,159,985. Nov. 9, 1915. Oriopp. Fuel connection for internal-combustion engines.
1,163,758. Dec. 14, 1915. Kahlenberg. Gas engine.
1,166,230. Dec. 28, 1915. Lemp. Fuel pump.
1,168,421. Jan. 18, 1916. Riker. Controlling means for internal-combustion engine.
1,173,105. Feb. 22, 1916. Internal-combustion engine.
Re. 10,951. July 31, 1888. Delamarre-Debouttevell. Gas engine.
*Re. 11,775. Sept. 26, 1899. Pace. Combustion engine.

REPORT NO. 11.

PART III.

NEW CLASSIFICATION AND ASSIGNMENT OF CARBURETORS.

By Charles E. Lucke.

(A) NEW CLASSIFICATION OF CARBURETORS OF THE PROPORTIONING-FLOW TYPE ON A RATIONAL BASIS OF SIMILARITIES AND DIFFERENCES, BOTH OF STRUCTURAL AND FUNCTIONAL OPERATIONS.

Those cases appearing in the four official lists of carburetor patents that upon examination are found to be proportioning-flow carburetors are marked with an asterisk [*], and these are rearranged here according to the new basis of classification, which provides 15 classes and 61 subclasses. The distinction between one class and another is indicated in Table I, which serves as a general guide to the following list of definitions of the new general classes and the several subclasses under each. In general the distinction between the classes is based on the constancy or variability of the area of the fuel and air flow passages, with reference to flow rate. Any such passage that does not automatically vary with flow rate is regarded as fixed, even though a manual adjustment is provided; in this case the area is adjustably fixed. It is necessary for the condition of variable area that the passage be provided with a regulating valve which graduates the area with reference to flow, and such a valve acting as, or connected to, a throttle, is regarded as automatic, as well as when independent of the throttle and actuated automatically by the flow itself.

Table I.—*Guide to new classification of proportioning-flow carburetors.*

Class.	Subclasses.	Fuel inlet.	Air inlet.
1	1.1, 1.2, 1.3, 1.4	Fixed, with periodic stop valve	Fixed.
2		Fixed from pump	Fixed, with air-motor driving pump.
3	3.1, 3.2, 3.3, 3.4, 3.5	Single, fixed	Single, fixed.
4	4.1	do	Multiple, fixed.
5	5.1, 5.2, 5.3	Multiple, fixed	Single, fixed.
6	6.1, 6.2, 6.3, 6.4, 6.5, 6.6	do	Multiple, fixed.
7	7.1, 7.2, 7.3, 7.4, 7.5	Single, fixed	Single, variable with regulating valve.
8	8.1, 8.2, 8.3, 8.4, 8.5, 8.6	do	Multiple, variable with regulating valve.
9	9.1, 9.2, 9.3, 9.4, 9.5	Multiple, fixed	Single, variable with regulating valve.
10	10.1, 10.2, 10.3, 10.4, 10.5, 10.6, 10.7, 10.8.	do	Multiple, variable with regulating valve.
11	11.1, 11.2, 11.3, 11.4	Single, variable with regulating valve.	Single, fixed.
		do	Multiple, fixed.
		Multiple, variable with regulating valve.	Single, fixed.
		do	Multiple, fixed.

TABLE I.—*Guide to new classification of proportioning-flow carburetors*—Contd.

Class.	Subclasses.	Fuel inlet.	Air inlet.
12.....	12.1, 12.2, 12.3, 12.4, 12.5, 12.6, 12.7.	Single, variable with regulating valve.	Single, variable with regulating valve.
13.....	13.1, 13.2, 13.3, 13.4, 13.5, 13.6.	.....do.....	Multiple, variable with regulating valve.
14.....	14.1, 14.2.....	Single, variable with regulating valve. Multiple, variable with regulating valve.	Single, variable with regulating valve. Multiple, variable with regulating valve.
15.....	15.1, 15.2.....	Variable thermostatically..	Variable thermostatically, barometrically.

PROPORTIONING FLOW CARBURETORS—NEW CLASSES AND SUBCLASSES.

NEW CLASS 1.—CARBURETORS, PROPORTIONING FLOW, FIXED AIR AND FUEL INLETS, PERIODIC FUEL VALVE.

Includes all cases of a single fuel inlet with a fuel valve opened each suction stroke without graduation of movement; single or double air inlet with a similarly operated valve or no air valve at all. Both the air and the fuel passages are of constant area when open. Normally designed for pressure supplies of fuel and for slow speed engines, more particularly those of the hit-and-miss governed stationary type, but not to the exclusion of others. Fixed area does not exclude manually adjusted air or fuel openings or the valves to make such adjustments because they do not change flow area with flow rate.

New subclass 1.1—Mechanically operated fuel valve, single air inlet.—The engine valve gear operates the fuel valve with, or without, an air inlet valve, in synchronism with the engine inlet valve, by direct mechanical movement or indirectly as, for example, by making electrical contacts to energize a solenoid.

New subclass 1.2—Single air inlet with automatic valve, fuel inlet in seat.—Single air inlet fitted with an automatic valve closed by gravity or a spring, and opened by the air flow or vacuum of disk, swing or other type, lifting substantially the same amount and exposing the fuel inlet completely, each time it lifts. The vacuum beyond the air valve has little or no influence on the fuel flow.

New subclass 1.3—Single air inlet automatic valve, fuel inlet beyond.—The lifting resistance of the automatic valve results in a vacuum beyond it, which directly influences fuel flow.

New subclass 1.4—Double air inlet, primary and secondary.—Air enters at two points, the primary directly sweeping the point of fuel inlet and exerting its velocity head influence on fuel flow, the secondary entering elsewhere and normally through a manually adjustable opening.

New class 2—Carburetors proportioning flow, metering fuel pump, air motor driven.—All types of air motor operated by the air that is being drawn into the engine by its piston suction, driving directly a fuel pump, when the air motor and the fuel pump are equivalent to two volume meters, the former driving the latter. Excluding fuel pumps operated by pressure pulsations of the air as not essentially related to the volume of air passing, and also all engine-driven fuel pumps with air fans or compressors as not essentially proportioning.

New class 3—Carburetors, proportioning flow, aspirating, single fixed fuel and air inlets.—All cases of fuel and air inlets not provided with graduating valves, but allowing manual adjustments, where the fuel enters only because of a depression of air pressure caused by the air flow as a result of the air velocity head, or of the entrance resistance or both. Single inlet for air includes a series of holes as equivalent to a slot when all the air flows and acts in the same way. Fuel inlets are single even when branched or of several orifices, if all are located in the same vacuum and act together. In all cases "aspirating" implies that the fuel is taken from a cup normally, but not always of constant level type, open to the atmosphere, the level in which is below that of the fuel inlet. The arrangement is always such that there is no fuel flow until the flow of air causes a lowering of pressure at the fuel outlet.

New subclass 3.1—Fuel inlet at air throat.—Air passages more or less regularly tapering toward a minimum area section or throat and later expanding, of which the venturi tube is the type form, and often called in the less perfect forms, "choke" or "strangle" tubes, with the fuel inlet at or near the throat. Such passages may be curved as well as straight. Normally the reduction of pressure inducing fuel flow is wholly due to air velocity head, and not at all to entrance resistance, but not exclusively so.

New subclass 3.2—Air guides or baffles.—After or during entrance, the air is guided so as to sweep the point of fuel entrance to produce an air velocity head vacuum effect on fuel flow, positively or negatively, if such positive action tends otherwise to become too vigorous.

New subclass 3.3—Rotating fuel spreader, air driven.—Movement of the air causes an air motor, usually constructed like a fan to rotate, and the fuel is discharged directly on the vanes or on a separate plate driven by them. The rotation may aid in fuel discharge by centrifugal action, but the fuel flow is primarily due to the vacuum at the outlet, otherwise the case would come under class 2.

New subclass 3.4—Variable jet and throat relation.—Air passages normally tapered to form a throat and the fuel inlet located at the end of a nozzle. Either air throat or fuel nozzle may be fixed in position while the other moves under the influence of the air flow, but without changing the flow area of either the air or the fuel passage. The effect is to change the velocity head at the fuel outlet with flow, usually automatically, from what it would be if the fuel outlet remained at a fixed point with reference to the throat.

New subclass 3.5—Variable float chamber pressure.—Fuel is taken from a closed cup or chamber, fitted with a valve, float, or diaphragm controlled for level, but the pressure on the chamber, instead of being constant atmospheric or otherwise, is varied, sometimes increased to induce a greater fuel flow, and sometimes decreased to retard an excess fuel flow. In some cases a small air flow through this chamber is used to secure the pressure control desired, but this is not considered as air flow in the ordinary sense because the quantity is negligible.

New class 4—Carburetors, proportioning flow aspirating, single fuel, multiple air inlets, both fixed.—Two or more air inlets, all fixed or adjustably fixed in area, which can be grouped in two ways. The first grouping is into primary and secondary, the former in-

cluding all air that sweeps the fuel inlet and adds by its velocity head some vacuum to induce fuel flow to the entrance resistance of both primary and secondary air; secondary air being that which enters beyond or by-passes the fuel inlet, and, therefore, has little or no aspirating effect on the fuel by its velocity head. Cases of this sort are classed here. The second grouping is into plain and mixed flow air passages, each with its own inlet, and such cases are classed under subclass 4.1.

New subclass 4.1—Mixed flow.—Part of the air, usually a small amount, enters the fuel passage, relieving the vacuum otherwise acting on the fuel at that point and thereby affecting its flow. Beyond the point of air entrance into the fuel passage both this air and the fuel move together to the fuel inlet constituting mixed flow. This mixed-flow air entrance may be active through the whole range of the carburetor-flow rates or only during the high-flow rate periods—i. e., continuous or intermittent.

New class 5—Carburetors, proportioning flow, aspirating, multiple fuel, single air inlets, both fixed.—Fuel inlets are multiple when they are differently situated for fuel flow at different heights above the level of the constant level chamber in regions of equal vacuum, or at the same heights in regions of different vacuum, or both, regardless of the number of actual orifices. Being fixed, they are without valves for graduating or regulating flow, though stop valves may be present, or manually adjusted valves or periodic opening valves, as in class 1. All the fuel inlets need not work continuously; some may act intermittently at some particular flow rate.

New subclass 5.1—Main fuel inlet, with supplementary high-speed jet.—One or more of the fuel inlets act throughout the whole range of air flow or mixing-chamber vacuum, while another one or set of fuel inlets will come into action when the vacuum is high, due to high rates of air flow, and is therefore intermittent.

New subclass 5.2—Main fuel inlet, with supplementary idling jet.—The supplementary jet acts only when the throttle is closed and is out of action when the throttle is wide open or the air-flow rate high. The main fuel inlet acts throughout the entire range of air-flow rates except perhaps on closed throttle, when it may go out of action, being replaced by the idling jet.

New subclass 5.3—Fuel standpipes.—A tube with holes at different heights above the level in the constant level chamber serves as the fuel inlet, or there may be separate tubes with outlets placed correspondingly. Increase of vacuum in the mixing chamber, due to increased air flow, causes the fuel to rise to successively new and high orifices, the fuel flow increasing correspondingly.

New class 6—Carburetors, proportioning flow, aspirating, multiple fuel and multiple air inlets, both fixed.—More than one fuel inlet, differently situated for flow, and more than one air inlet also different in position or action, the several inlets acting continuously, or intermittently by succession or alternation.

New subclass 6.1—Double carburetor, progressive, by throttle.—Two complete carburetors each with its own fixed fuel and air inlets, one working throughout the whole range, the other being brought into action by the throttle as it approaches full open position.

New subclass 6.2—Multiple carburetor, progressive, by throttle.—More than two complete carburetors, each with its own fixed fuel and air inlets, one always in action and the others brought in successively as the throttle is opened.

New subclass 6.3—Double carburetor, progressive, by vacuum.—Two complete carburetors, as in class 6.1, but the second brought into action by the vacuum acting on a piston, disk, or diaphragm, when the air flow in the first becomes high enough to result in a vacuum in excess of a predetermined value.

New subclass 6.4—Multiple carburetor, progressive, by vacuum.—More than two complete carburetors, each with its own fixed air and fuel inlets, one always in action and the others brought in successively by the vacuum.

New subclass 6.5—Mixed flow.—Part of the air enters one or more of the fuel passages thereby affecting the fuel flow. This mixed flow action may be continuous or intermittent and may affect all the fuel inlets or only one. When intermittent, the mixed flow may act on one of the main fuel jets to modify its flow at high rates, or at low rates due to closed throttle may act as a jet, or both. Two fuel inlets, side by side, are multiple when one discharges fuel only while the other discharges fuel and air, even though the jets are in the same vacuum because this vacuum does not act equally in producing fuel flow in both.

New subclass 6.6—Fuel standpipe.—Multiple orifices in a standpipe at different levels, or multiple passages with outlets at different levels coming successively into action as the vacuum increases, receiving primary air from one or one set of air inlets, secondary air entering beyond from others.

New class 7—Carburetors, proportioning flow, aspirating, single fixed inlet and single air inlet with regulating valve.—A fixed fuel inlet is associated with one air inlet provided with a valve for graduating the air-inlet area as flow changes, so that for any given flow rate the vacuum acting on the fuel inlet and inducing fuel flow is not the same as it would be with a fixed air inlet. The vacuum is, therefore, not merely the result of a given rate of air flow, but depends just as much, or more, on the air-inlet area as regulated by the air valve. This air valve may be actuated in any way or be of any form, each type combination constituting a subclass. There may be more than one fuel inlet, but if all are so located as to work similarly as to fuel flow versus air vacuum they must be regarded as a multibranched single inlet, even if supplied with different fuels, so far as proportioning is concerned.

New subclass 7.1—Fuel inlet between throttle-controlled air valve and throttle.—As the throttle or mixture outlet valve is moved the air-inlet valve moves with it, thereby controlling to some extent the vacuum between them which acts on the fuel flow. The connection may be by simple linkage or by special cams to secure any desired relative change in the areas of the air inlet and the throttle outlet.

New subclass 7.2—Fuel inlet at or before air valve which acts as a throttle.—Placing the fuel inlet in the air entrance, fuel flow is induced entirely, or substantially so, by the velocity head of the air, and this velocity head is regulated by the air valve. In such cases no separate throttle is necessary; the air valve itself may be regarded as the throttle and called such instead of air valve.

New subclass 7.3—Fuel inlet between automatic air valve and throttle.—Air enters through an automatic air valve of any form, opened by the vacuum against a spring or gravity closing load, and the vacuum which acts on the fuel inlet is controlled by the size form and loading of this automatic valve. The automatic air-inlet valve may close the air entrance completely or there may be some fixed air inlets nearby. If the air from such fixed air inlet moves with the air from the automatic valve, the effect is substantially the same as if all the air entered through the automatic valve, which still is the controlling element in the fuel-flow vacuum. When part of the air enters through a fixed and part through an automatic valved inlet, one acting as primary and the other as secondary air, the case falls under subclass 8.2.

New subclass 7.4—Fuel inlet swept by air entering through automatic air valve.—This subclass differs from the last in the position of the fuel inlet with relation to the air inlet. Here the fuel inlet is so located as to be directly swept by the entering air, fuel flow being largely dependent on the air-velocity head. Normally the automatic air valves of this subclass are but lightly loaded or the lead does not increase fast enough with flow, and there is insufficient air-entrance resistance to alone produce the vacuum required to draw enough fuel. The automatic valve need not completely close the air inlet; there may be fixed air inlets nearby; but no combination that could be regarded as divisible into primary and secondary air is permissible in the subclass.

New subclass 7.5—Variable float chamber pressure.—Fuel is taken from a closed chamber fitted with a level control valve, but the pressure in the chamber is varied by connection to the carburetor interior to control the flow of fuel from the single fixed inlet, in addition to such control as might be available with the variable air inlet. A small air flow through the float chamber used solely to secure the desired pressure on the surface of the fuel is not regarded as air flow in the general sense.

New class 8—Carburetors, proportioning flow, aspirating, single fixed fuel inlet, multiple air inlets, valved for regulation.—The air enters at more than one point, the entrance locations being such that their aid does not act the same in inducing fuel flow. The difference may be that corresponding to primary versus secondary air or main versus mixed-flow air. At least one of the air inlets has a regulating valve operated automatically or by the throttle, and the others may be fixed or themselves fitted with regulating valves.

New subclass 8.1—Two air inlets, fixed primary, throttle controlled secondary regulating air valve.—A fixed air passage carries a fixed fuel jet and beyond it secondary air is admitted through a port controlled directly by the throttle itself or by a separate valve linked to the throttle. The secondary air may enter at all throttle positions or be cut off when throttle is nearly closed.

New subclass 8.2—Two air inlets, fixed primary, automatic secondary regulating air valve.—To the mixture formed from the fixed fuel and primary air inlets secondary air is added through an automatic valve, which opens when the vacuum exceeds its closing load. The automatic valve need not completely close the secondary air inlet. There may be fixed inlets near by, but it does control the final

vacuum and total amount after it opens. Similarly the primary air may leave more than one orifice.

New subclass 8.3—Two air inlets, both with regulating valves, one automatic, the other throttle controlled.—Primary air may enter through the automatic and the secondary air through the throttle controlled valve or vice versa. As in other cases, the regulating air valve need not completely close the air inlet it controls, and may be of multiorifice form.

New subclass 8.4—Two air inlets, both with automatic-regulating valves.—Both primary and secondary air enter through automatic valves, which may be entirely separate and similar or different in form, size, or loading, or there may be one ordinary automatic valve, with a linkage connection controlling another valve entirely different. In all cases it is the vacuum that controls not only the whole air but the relative amounts of primary and secondary, either directly or indirectly automatically and independent of the throttle.

New subclass 8.5—Two air inlets, both with throttle-controlled regulating valves.—There may be three valves, two for air inlet and a third acting as throttle, or only two, the two air inlets moving together and acting as throttle; but in both cases the primary and secondary air are controlled in ratio as well as total quantity by mechanically operated valves acting as throttle or connected to it.

New subclass 8.6—Mixed flow.—Part of the air enters the fuel passage, affecting the fuel flow and emerging with the fuel from the fuel inlet either continuously or intermittently. The other air stream, or main air, may enter in any of the ways appropriate to the class, through one or more inlets with regulating valves. Normally the mixed-flow air inlet has no valve except as a liquid seal may act as a stop valve, but a regulating valve may be added.

New class 9—Carburetors, proportioning flow, aspirating, multiple fixed fuel inlets, single air inlet with regulating valve.—A series of fuel inlets without regulating valves are so disposed as to be acted upon differently by the air which enters through a single valve regulating the air-inlet area. The fuel inlets may be located in the same position or vacuum region and arranged to be brought into action successively as the air-inlet area increases, or they may be arranged at different levels in the same chamber, to be brought into action as the vacuum causes the level to rise, or they may be located in different places in the chamber where the vacuum is different.

New subclass 9.1—Fuel inlets act progressively with opening of single automatic air-inlet regulating valve.—Air enters through a port controlled by an automatic valve, spring or gravity loaded, usually the former, and opened by the vacuum. As the effective size of the air inlet increases, the fuel inlets are brought into action successively as the air sweeps past an increasing number. Fuel flow is induced primarily by the air-velocity head past each fuel inlet in turn, though not exclusively so, and the fuel inlets are located at or before the air inlet.

New subclass 9.2—Fuel inlets act progressively with opening of single throttle-controlled air-inlet regulating valve, or air valve acting as throttle.—Instead of moving automatically, as in the last subclass, the air valve is here controlled by the throttle or is itself the throttle, otherwise there is no difference.

New subclass 9.3—Fuel standpipe.—Single tubes with holes, or a series of tubes with outlets, successively higher, arranged in a chamber supplied with air from an air inlet having a regulating valve, either automatic or throttle controlled.

New subclass 9.4—Two fuel inlets, one main and one idling.—A main fixed fuel inlet is disposed between the automatic valved air inlet and the throttle, with a supplementary fuel inlet located so as to be brought into action when the throttle is closed, or nearly so. Two fuel inlets may be similarly arranged for the main and supplemental low speed or idling action, associated with an air-inlet regulating valve, throttle controlled, or acting as throttle, in which case one or both of the fuel inlets may be at or in front of the air.

New subclass 9.5—Tilting fuel chamber, radially disposed fuel inlets.—Either the float chamber itself or a supplemental chamber connected with it, in which the fuel level is under control, lies wholly within the air passage, and arranged to be tilted or partially rotated so as to bring into action successively a series of fuel inlets disposed about its axis. The tilting is accomplished by a connection with the throttle, and the chamber itself may act as air-regulating valve, or as both throttle and air valve.

New class 10—Carburetors, proportioning flow, aspirating, multiple fixed fuel inlets with air inlets, valved for regulation.—Multiple, applied as ter, to fuel inlets implies that the several inlets shall be at least in part subjected to different fuel flow conditions, and either regularly, intermittently, or successively have imposed upon them more or less different conditions; mere multiplicity of orifices is not intended. The term multiple applied to air inlets has a similar significance, the several air inlets either act differently at the same time, or act in succession or alternately. At least one of the air inlets has a regulating inlet valve, controlled by the throttle or acting as throttle, or automatic, and all the inlets may be similarly valved.

New subclass 10.1—Main fuel inlet, with supplementary high-speed jet.—Two fuel inlets, both fixed, one the main or low-speed jet, acting constantly, and the other a supplementary or high-speed jet, brought into action at high-flow rates by the vacuum, by the opening of a secondary automatic air valve. Normally the main jet is located in a fixed air inlet and there is an automatic secondary air valve, through other air-inlet arrangements are included, provided one at least has a regulating valve.

New subclass 10.2—Main fuel inlet, with supplementary idling jet.—Two fuel inlets, both fixed, one the main or high-speed jet acting constantly except perhaps at low rates or closed throttle, the other a supplementary idling jet brought into action by the throttle in its closed or nearly closed position and normally replacing the main jets for low-flow rates. In all cases there is more than one air inlet and at least one of them has an automatic regulating valve; the normal case is that of one fixed primary or main air and an automatic secondary.

New subclass 10.3—Multiple carburetor, progressive, by throttle, with individual automatic air-inlet regulating valves.—Two or more fixed fuel inlets, each located in a separate air passage, supplied through an automatic air-inlet valve, brought into action in succession by the throttle. The automatic air-inlet valves may or may not

completely close the air inlets, but even if there are near by fixed air inlets, the automatic valves control the air flow and the vacuum at the fuel outlet when they open. There may be a secondary air inlet for each jet or a common one for all or none at all.

New subclass 10.4.—Multiple carburetor, progressive, by vacuum, with individual automatic air-inlet regulating valves.—This subclass is similar to the last, except that the progressive acting of the several similar members is controlled by an automatic valve, vacuum moved, at their outlets.

New subclass 10.5—Fuel standpipe.—Fuel rises with increase of vacuum successively higher outlets in a single standpipe or in separate tubes, located in a fixed primary air passage, secondary air entering through an automatic valve in a separate air-inlet passage.

New subclass 10.6—Mixed flow.—Part of the air enters one or more of the fuel passages affecting the fuel flow in it and making it a mixed flow passage, either steadily or intermittently, the fuel likewise flowing from its several inlets either steadily or intermittently. When the action of the air into a mixed flow passage, or that of the fuel through an inlet, is intermittent, this may be due to throttle position or to vacuum or both.

New class 11—Carburetors, proportioning flow, aspirating, single or multiple fuel inlets with regulating valves, single or multiple fixed air inlet.—Fixed air inlets are associated with fuel inlets provided with fuel-regulating valves in any number, from one fixed air and one regulated variable fuel upward. The fuel-regulating valve may be actuated by a throttle connection or by the vacuum or by the air flow directly.

New subclass 11.1—Single fuel-inlet valve, throttle controlled.—To a fixed air passage the single fuel inlet is connected in any of the ways already classified for fixed fuel inlets, but here the fuel inlet is provided with a regulating valve connected to and moving with the throttle, so that fuel flow no longer varies primarily as a result of a change in the air vacuum, but also directly as a result of the area made available for its flow by the fuel-regulating valve. A secondary fixed air passage may be present.

New subclass 11.2—Single fuel inlet, independently controlled by air flow or vacuum.—One fuel inlet with a graduating valve directly actuated by the vacuum or by the air flow acting by impact on a moving member or lifting a flow valve, without affecting the air inlet area up to the point of fuel inlet. There may be a fixed secondary air passage.

New subclass 11.3—Mixed flow.—One or more fuel inlets, at least one with a fuel regulating valve actuated in any way. Two or more air inlets, at least one of which enters the fuel passage affecting its flow and making it from that point on a mixed flow passage.

New class 12—Carburetors, proportioning flow, aspirating, single fuel and air inlets, both with regulating valves.—Regulating valves are provided to control the areas of both the single air and fuel inlets, so proportionality becomes as much a matter of the relative areas of two variable inlets as of the vacuum at the fuel inlet that results from the air flow.

New subclass 12.1—Valved fuel inlet beyond air inlet valve acting as throttle, fuel valve controlled by air valve.—A direct connection

between the fuel and the air inlet valve controls the total quantity of air and fuel and the ratio by inlet areas alone. The fuel inlet is in a region where the vacuum is that due to the air flow through the restricted valved inlet.

New subclass 12.2—Valved fuel inlet between air inlet valve and throttle, both fuel and air valves controlled by the throttle.—By using a throttle in addition to an air valve the vaccum between them is under control, and by it the fuel flow also, independent of such fuel flow control as results directly from the fuel regulating valve linked to both throttle and air valve.

New subclass 12.3—Valved fuel inlet, at or in front of air valve acting as throttle, fuel valve controlled by air valve.—Locating the fuel inlet at, or in front of the air valve opening relieves it of the vacuum beyond, and the fuel flow is normally though not exclusively the result of air velocity head at the entrance, the fuel area being graduated to correct excesses or deficiencies of fuel flow otherwise present.

New subclass 12.4—Valved fuel inlet between automatic air inlet valve and throttle, fuel valve controlled by throttle.—Air entrance through an automatic valve results in a limited variation of vacuum at the point of fuel inlet affecting fuel flow, which is also subject to the variations of fuel inlet area resulting from the control of the fuel valve by the throttle. The automatic air inlet valve may or may not close the inlet completely, but it controls the air flow and vacuum even if some fixed air inlets are located nearby.

New subclass 12.5—Valved fuel inlet between automatic air-inlet valve and throttle, fuel valve controlled by automatic air valve.—As in the last case the fuel inlet is subjected to the entrance resistance of the air passing the automatic valve and the fuel flow is the result, partly of this and partly of the change in the fuel inlet area as regulated by the fuel valve which is here actuated by automatic valve. Normally both air and fuel are primarily controlled in quantity and proportion by the two relative and connected valved openings rather than by any material vacuum change, though not exclusively. The automatic air valve need not completely close the air inlet.

New subclass 12.6—Valved fuel inlet, between air inlet valve and throttle, fuel valve vontrolled independently by vacuum or air flow.—The air inlet valve may be either sort, automatic or mechanically connected to throttle, but the fuel valve is controlled independently of the air valve or throttle, by the vacuum directly, or by flow valves beyond it, or by air impact on moving members.

New subclass 12.7—Variable float chamber pressure.—In addition to the use of a fuel inlet with a regulating valve associated with an air inlet similarly provided with a regulating valve, fuel flow is subjected to the further control of the pressure in a closed float chamber which is varied by a connection to the vacuum chamber of the carburetor. Any air that flows through the float chamber as part of the means of pressure control on the fuel surface is disregarded.

New class 13—Carburetors, proportioning flow, aspirating, single fuel and multiple air inlets, both with regulating valves.—Normally, two air inlets, one primary and the other secondary, are associated with a single fuel inlet having a regulating valve, but there may be more air inlets.

New subclass 13.1—Valved fuel inlet, fixed primary air, fixed or valved secondary air inlet, throttle control of fuel-inlet valve and of secondary air valve.—The changes in vacuum at the fuel inlet supplied with primary air from the fixed air inlet, even as modified by a fixed or throttle-controlled secondary air, are not relied upon to control fuel flow, but a fuel-regulating valve actuated by the throttle is added.

New subclass 13.2—Valved fuel inlet, valved primary and secondary air inlets, throttle control of both air inlets and fuel-inlet valve.—Variation of two air-inlet areas and the fuel-inlet area with the throttle subjects both air and fuel flow to the control of mechanically related inlet and throttle outlet areas, and the vacuum at the fuel outlet still remains as a factor.

New subclass 13.3—Valved fuel inlet, fixed primary and throttle-controlled secondary air inlets, fuel valve controlled by the vacuum or air flow independently.—Fuel-inlet area is dependent upon the vacuum or air-flow conditions independent of the throttle or of the throttle-controlled secondary air.

New subclass 13.4—Valved fuel inlet, fixed primary and automatic valved secondary air inlets, fuel valve controlled by the throttle.—Fuel-inlet area is dependent upon the mixture-outlet area by the throttle connection and is independent of the air-inlet areas, the vacuum at the fuel inlet being, however, directly dependent on the air inlets.

New subclass 13.5—Valved fuel inlet, fixed primary and automatic valved secondary air inlets, fuel valve controlled by the automatic secondary air valve.—The throttle is independent. Fuel-inlet area is related to the movement or entrance area of the automatic secondary valve.

New subclass 13.6—Valved fuel inlet, valved primary and secondary air, both automatic, fuel valve controlled by one or both automatic air-inlet valves.—The two air-inlet automatic valves may be independent or consist of two ports controlled by one valve, and the inlets need not be completely closed by the automatic valves so long as they control the flow and the resulting vacuum.

New class 14—Carburetors, proportioning flow, aspirating, multiple fuel and air inlets, both with regulating valves.—Two or more fuel inlets each differently situated or different in action are associated with two or more fuel inlets each acting differently with respect to flow, and at least one of the fuel and one of the air inlets is provided with a regulating valve, though all may be so equipped.

New subclass 14.1—Two fuel inlets, one fixed main and one valved supplementary high-speed jet, two air inlets, one fixed primary and one valved secondary.—A two-jet type of carburetor, the second or high-speed jet coming into action with the opening of the secondary air valve automatically or brought in by the vacuum due to high-flow rates. However brought in, the high-speed jet is provided with a regulating valve.

New subclass 14.2—Multiple carburetors, progressive by throttle or vacuum.—Two or more complete carburetors, each with its own fuel and air inlet, both with regulating valves, and brought successively into action by either the throttle or the vacuum. There may be a common secondary air inlet at their outlets, throttle controlled or automatic.

New class 15—Carburetors, proportioning flow, aspirating, thermostatic or barometric control.—Density corrections for air or fuel, and for viscosity of fuel to compensate for changes in temperature of either, or changes in absolute pressure of the former, by actuating their inlet valves or by restoring the original value of the variable.

New subclass 15.1—Thermostatic controls.—Automatic means of keeping a constant temperature of air or fuel or both or of actuating the regulating valves to compensate for temperature changes.

New subclass 15.2—Barometric controls.—Automatic means of keeping the absolute pressure of the air supply constant or of actuating the air-inlet valves to compensate for variations.

(B) Assignment to the new classes and subclasses of all United States patents for "proportioning-flow" type carburetors found in the official lists of Part II (A), (B), (C) and (D), constituting a new list of all United States patents containing proportioning-flow carburetors arranged according to the new classification.

United States patents.

Patent No.	Present official—	
	Class.	Subclass.
New class 1, carburetors, proportioning-flow fixed air and fuel inlets, periodic fuel valve:		
517,344	123	130
531,779	48	149
532,314	123	28
534,354	C. R. 2	.....
556,069	48	154.1
565,033	123	35
566,125	123	35
578,034	123	35
581,930	48	155
584,606	C. R. 2	.....
587,627	C. R.	.....
598,832	123	129
599,375	C. R. 2	.....
599,376	123	112
608,968	C. R. 2	.....
611,341	48	134.1
614,114	123	123
627,359	C. R. 2	.....
632,859	C. R.	.....
635,298	261	51
	123	133
630,048	C. R. 2	.....
649,191	48	154.1
657,140	C. R.	.....
658,127	C. R. 2	.....
658,367	C. R. 2	.....
668,953	261	13
670,921	48	154.1
680,115	123	119
682,682	C. R. 2	.....
688,367	48	154.1
692,444	261	67
696,231	48	148
703,937	48	154.1
705,314	48	155
706,021	48	148
722,672	123	123
706,050	48	155
714,982	48	154.1
724,328	48	154.1
726,191	123	35
727,476	48	154.1
729,254	48	154.1
730,606	48	154.1
741,959	48	154.1

Patent No.	Present official—	
	Class.	Subclass.
New class 1, carburetors, proportioning-flow fixed air and fuel inlets, periodic fuel valve—Continued.		
747,235	48	154.1
748,990	123	129
756,879	48	150.1
760,333	C. R. 2	.....
760,673	48	154.1
761,192	48	155
761,392	48	154.1
778,154	C. R. 2	.....
778,988	48	148
791,192	48	154.1
793,498	48	155
794,192	123	123
806,079	48	154.1
811,397	261	62
817,051	261	12
820,408	48	154.1
826,787	48	154.1
842,429	48	154.1
850,223	48	154.1
860,630	123	35
863,516	C. R.	.....
866,002	C. R. 2	.....
868,265	48	155.2
871,288	48	150.1
878,824	48	155
890,099	48	154.1
891,322	48	150.2
911,967	48	154.1
915,684	48	154.1
930,483	C. R.	.....
944,811	48	154.1
955,222	48	154.1
973,882	48	154.1
974,033	48	154.1
975,696	C. R.	.....
976,409	48	155.1
978,076	48	154.1
994,886	48	154.1
979,409	48	154.1
999,083	48	154.1
999,687	C. R.	.....
1,004,091	48	154.1
1,007,659	48	154.1
1,009,252	48	154.1
1,021,326	48	154.1

United States patents—Continued.

Patent No.	Present official— Class.	Subclass.
New class 1, carburetors, proportioning-flow fixed air and fuel inlets, periodic fuel valve—Continued.		
1,029,606	48	154.1
1,044,314	48	154.1
1,049,318	48	154.1
1,063,866	C. R.	
1,111,179	48	154.1
1,120,397	48	154.1
1,124,911	48	154.1
1,128,968	48	154.1
1,130,228	48	154.1
1,137,728	48	154.1
1,145,854	48	154.1
1,146,181	48	154.1
1,151,156	123	123
1,172,258	48	154.1
New class 1.1, mechanically-operated fuel valve, single air inlet:		
433,806	C. R. 2	
433,807	C. R.	
437,507	123	35
456,264	C. R. 2	
482,202	C. R. 2	
526,857	C. R. 2	
537,870	C. R. 2	
550,451	C. R. 2	
573,762	123	122
574,183	123	121
585,115	C. R.	
596,809	123 123	122 123
527,887	C. R.	
653,594	123	121
659,095	123	123
679,053	123	121
690,481	C. R. 2	
728,873	123	35
740,571	C. R.	
751,292	48	150.2
788,748	123	123
792,894	123	121
806,822	123	119
846,434	C. R. 2	
857,111	48	168
858,046	123	133
883,598	123	123
924,483	C. R. 2	
951,353	123	35
New class 1.2, single air inlet with automatic valve, fuel inlet in seat:		
417,924	C. R. 2	
418,029	123	129
523,511	C. R. 2	
532,100	C. R. 2	
539,710	C. R. 2	
555,717	C. R.	
563,541	C. R.	
593,043	C. R. 2	
593,911	48	155
598,986	123	34
600,147	C. R. 2	
603,986	C. R. 2	
627,219	C. R. 2	
635,166	48	155.1
645,044	C. R.	
683,110	48	168
690,112	48	154.1
700,295	123	35
719,536	48	155.1
722,357	48	154.1
729,377	123	123
731,218	48	154.1
755,093	123	141
782,471	123	123
806,139	C. R. 2	
New class 1.2, single air inlet with automatic valve, fuel inlet in seat—Continued.		
817,721	48	155
819,239	123	25
856,760	C. R. 2	
866,490	48	154.1
868,392	123	129
874,822	C. R. 2	
877,753	123	129
894,555	48	150.2
913,313	48	154.1
922,374	48	154.1
922,383	C. R.	
948,977	48	154.1
955,218	123	123
970,251	123 261	141 50
973,056	48	155.2
978,787	48	154.1
995,919	48 48	150.2 155.2
1,046,141	48	154.1
1,048,518	48	150.3
Re. 13,530		
1,067,351	48	154.1
1,086,359	48	154.1
1,098,622	48	150.1
1,101,147	48	150.1
1,156,836	48	148
New class 1.3, single air inlet automatic valve, fuel inlet beyond:		
448,386	C. R. 2	
498,447	48	154.1
500,401	48	154.1
509,328	48	154.1
515,050	48	154.1
552,263	123	123
567,253	48	154.1
578,683	48	154.1
583,466	123	122
593,911	C. R.	
609,557	48	154.1
616,974	48	150.2
632,917	C. R. 2	
633,800	48	154.1
638,529	48	148
668,496	48	148
671,743	123	132
619,776	C. R. 2	
676,285	123	122
680,572	48	154.1
680,961	C. R.	
681,287	C. R. 2	
694,708	48	154.1
709,126	123	123
709,428	123	136
710,841	C. R.	
746,701	C. R. 2	
756,908	48	151.1
799,791	48	155.2
806,125	C. R.	
835,564	48	155.2
837,984	48	168
863,516	48	154.1
882,023	48	155.2
892,501	C. R. 2	
904,508	C. R.	
912,993	48	154.1
912,999	48	154.1
930,443	48	154.1
938,894	48	154.1
952,547	48	150.2
963,804	48	154.1
964,409	C. R.	
964,831	48	154.1
988,659	48	154.1
1,022,803	C. R. 2	

United States patents—Continued.

Patent No.	Present official— Class.	Subclass.
New class 1.3, single air inlet automatic valve, fuel inlet beyond—Continued.		
1,061,582	48	154.1
1,063,630	48	154.1
1,066,080	48	154.1
1,111,897	C. R.	
1,137,727	48	154.1
New class 1.4, double air inlet, primary and secondary:		
610,460	C. R. 2	
679,387	48	154.1
715,398	48	154.1
717,000	48	154.1
726,191	48	155
726,671	C. R.	
741,224	48	154.1
800,777	48	148
888,263	48	154.1
896,388	48	154.1
903,206	48	154.1
938,894	48	155.2
939,856	48	154.1
951,002	48	154.1
1,178,530	48	148
1,181,514	48	155.1
New class 2, carburetors, proportioning flow, metering fuel pump, air motor driven:		
249,363	48	153
791,801	48	155.1
957,976	48	155.1
1,048,033	48	154.1
1,119,479	48	152
1,137,120	48	155
1,137,238	48	155.1
1,149,323	48	152
1,150,115	48	148
1,153,077	48	152
New class 3, carburetors, proportioning flow, aspirating, single fixed fuel and air inlets:		
439,313	C. R.	
477,295	C. R.	
542,043	C. R.	
550,675	C. R.	
613,757	C. R.	
627,857	C. R.	
633,274	123	132
634,242	48	155.1
640,394	C. R. 2	
640,674	C. R. 2	
644,566	48	155.1
650,736	123	141
658,267	123	132
670,803	C. R. 2	
671,714	123	123
682,596	48	155.1
682,606	C. R. 2	
685,993	48	149
690,610	C. R.	
690,989	48	155.1
694,110	48	148
696,146	C. R.	
702,469	48	155.1
703,769	C. R.	
705,995	48	154.1
706,494	C. R.	
711,005	48	155.1
721,238	48	155
724,648	48	155.1
729,467	48	155.1
730,084	C. R.	
737,848	48	155.1
772,530	C. R.	
781,936	48	148
790,379	123	132
New class 3, carburetors, proportioning flow, aspirating, single fixed fuel and air inlets—Continued.		
804,589	261	15
812,371	C. R. 2	
816,109	C. R. 2	
822,172	C. R.	
846,903	48	155.1
849,048	123	136
854,246	48	155.1
855,179	48	155.1
867,604	48	155
872,336	C. R.	
891,064	C. R. 2	
915,647	48	155.1
917,283	123	25
936,387	48	155.1
939,481	48	155
975,796	C. R.	
1,006,033	48	155.2
1,008,155	48	144
1,013,759	48	150.1
1,026,491	48	155.1
1,081,900	48	155
1,084,151	48	150.1
1,103,451	123	122
1,105,017	123	122
1,109,025	C. R.	
1,110,438	123	127
1,118,459	48	155.1
1,160,602	48	155.1
1,166,907	48	150.1
1,171,200	48	150.1
1,178,972	123	122
1,179,664	48	144
New class 3.1, fuel inlet at air throat:		
350,769	C. R.	
657,739	123	132
657,740	48	155
693,773	48	155.1
733,695	201	12
765,814	C. R. 2	
789,527	48	155.1
858,586	123	131
887,370	123	132
890,273	48	155.1
897,259	123	119
906,980	123	132
928,939	C. R.	
954,905	48	148
984,032	C. R.	
1,014,958	123	180
1,026,425	C. R. 2	
1,033,505	123	7
1,038,699	C. R.	
1,052,897	48	155.2
1,054,728	C. R. 2	
1,063,066	123	7
1,068,195	C. R. 2	
1,081,258	C. R.	
1,101,913	123	122
1,102,025	123	73
1,107,636	C. R. 2	
1,117,641	C. R.	
1,117,642	C. R.	
1,130,981	48	155.1
1,148,166	123	25
1,153,364	123	09
1,190,714	48	219
New class 3.2, air guides or baffles:		
660,482	C. R.	
699,504	48	155.1
737,463	48	155.1
791,501	C. R.	
797,972	48	155.1

United States patents—Continued.

Patent No.	Present official— Class.	Subclass.
New class 3.2, air guides or baffles—Continued.		
817,641	48	155.1
817,941	123	132
825,754	48	155.1
844,900	123	133
	261	68
882,083	48	155.1
886,283	48	168
903,112	C. R.	----------
931,389	C. R.	----------
1,072,376	48	155.1
1,109,192	C. R.	----------
1,134,021	48	155.1
1,141,570	48	148
New class 3.3, rotating fuel spreader, air driven:		
868,707	123	141
	261	51
1,092,953	48	155.1
1,178,127	48	155.1
New class 3.4, variable jet and throat relation:		
656,197	48	155.2
1,086,226	48	155.1
1,149,903	48	154.1
New class 3.5, variable float chamber pressure:		
656,101	C. R.	----------
741,962	48	155.2
954,433	48	155.1
960,601	48	*155.1
961,152	C. R.	----------
992,260	48	155.2
998,457	48	155.1
1,002,646	48	155.1
1,064,627	48	155.1
1,064,628	48	155.1
1,074,625	48	155.1
1,108,727	48	155.1
1,166,734	48	150.1
New class 4, carburetors, proportioning flow aspirating, single fuel, multiple air inlets, both fixed:		
504,723	C. R.	----------
549,939	C. R.	----------
557,496	C. R.	----------
605,815	C. R.	----------
664,200	C. R.	----------
699,309	48	155.1
726,936	48	150.2
754,001	123	101
72,979	48	155.1
775,103	123	98
84[illegible],170	48	155.2
871,134	48	150.2
878,770	48	155.1
991,029	C. R. 2	----------
994,653	123	122
995,976	48	155.2
1,003,351	48	150.1
1,006,088	48	155.1
1,019,209	48	155.1
1,031,147	48	155
1,042,079	48	155
1,072,875	48	148
1,116,986	48	155.1
1,134,365	48	155.1
1,159,167	48	150.3
1,169,483	48	156
1,174,529	48	155.1
New class 4.1, mixed flow:		
681,382	48	155.1
	123	132
684,662	48	150.1
686,092	C. R.	----------
719,486	48	155.1
New class 4.1, mixed flow—Continued.		
801,539	123	132
898,920	123	132
1,065,912	48	150.3
1,121,630	48	155.1
1,130,490	48	150.3
1,149,035	48	155.1
1,183,293	48	150.1
New class 5.1, main fuel inlet, with supplementary high-speed jet:		
1,079,634	48	150.3
New class 5.2, main fuel inlet, with supplementary idling jet:		
995,074	48	150.2
1,183,294	48	150.3
New class 5.3, fuel standpipes:		
1,093,343	48	150.3
1,148,378	48	150.3
New class 6, carburetors, proportioning flow, aspirating, multiple fuel and multiple air inlets, both fixed:		
811,613	48	150.1
861,378	C. R. 2	----------
1,013,983	48	148
1,097,165	48	155.1
1,102,722	48	150.1
1,125,368	48	150.3
New class 6.1, double carburetor, progressive by throttle:		
898,494	48	150.3
898,495	48	150.3
907,757	48	150.3
1,002,699	48	150.3
1,011,694	48	150.3
1,069,502	C. R.	----------
1,096,482	48	155.1
1,122,571	48	150.3
New class 6.2, multiple carburetor, progressive by throttle:		
759,624	48	150.3
832,184	48	150.3
879,380	48	150.3
910,013	48	150.3
943,612	48	150.3
1,018,262	48	150.3
1,021,547	48	150.3
1,144,206	48	150.3
1,158,589	48	150.3
1,162,041	48	150.3
982,428	48	150.3
New class 6.3, double carburetor, progressive by vacuum:		
851,759	48	150.3
872,138	123	98
1,176,627	48	150.3
1,176,651	48	150.3
New class 6.4, multiple carburetor, progressive by vacuum:		
664,134	48	150.3
871,320	48	150.3
1,049,705	48	150.3
1,072,733	48	150.3
1,113,221	48	150.3
	48	155.1
1,146,150	48	150.3
1,180,976	48	150.3
1,185,016	48	150.3
New class 6.5, mixed flow:		
907,958	48	150.1
988,123	48	150.3

United States patents—Continued.

Patent No.	Present official— Class.	Subclass.
New class 6.5, mixed flow—Continued.		
1,002,700	48	150.3
1,013,708	48	155.1
1,051,041	48	150.3
1,063,148	48	150.3
1,089,372	48	150.3
1,090,047	48	150.3
1,096,626	48	150.3
Re. 14,045	48	155.1
1,099,277	48	150.1
1,109,974	48	150.3
1,112,374	48	150.3
1,116,023	48	150.3
	48	155.1
1,143,986	48	150.3
1,144,206	C. R.	.....
1,153,436	48	150.1
1,170,348	48	150.3
1,170,416	48	150.3
1,170,417	48	150.3
1,175,536	48	150.3
1,176,267	48	150.2
1,177,624	48	150.3
1,183,019	48	150.3
1,183,864	48	168
1,183,678	48	150.3
New class 6.6, fuel standpipe:		
927,211	48	150.3
New class 7, carburetors, proportioning flow, aspirating, single fixed inlet and single air inlet with regulating valve:		
864,111	48	155.1
865,539	48	155.2
876,800	48	155.1
911,692	48	155.2
935,833	48	155.1
936,118	48	155.1
967,407	48	155.1
1,037,833	48	155
1,062,688	48	155.2
1,101,736	48	155.1
New class 7.1, fuel inlet between throttle-controlled air valve and throttle:		
771,492	48	150.1
789,749	48	155.1
794,927	48	155.1
810,435	C. R.	.....
823,485	48	150.2
853,428	48	155.1
856,638	123	131
	48	155
861,438	48	155.2
863,739	48	155.1
867,859	48	150.2
893,685	48	155.1
896,559	123	132
932,465	48	150.3
973,602	48	150.2
976,813	48	155.1
977,831	48	155.1
1,006,387	48	150.3
1,043,077	48	155
1,044,754	48	155.1
1,054,084	48	150.1
1,062,333	48	150.1
1,077,881	123	25
1,077,910	48	150.1
1,095,101	48	155.1
1,105,008	48	144
1,118,917	48	155.1
1,124,724	48	150.1
1,135,729	48	155.1
1,139,851	48	155
1,145,990	48	150.1
1,150,202	48	150.1
New class 7.1, fuel inlet between throttle-controlled air valve and throttle—Continued.		
1,150,224	48	150.1
1,151,159	48	155.1
1,151,286	48	155.1
1,163,581	48	155.1
New class 7.2, fuel inlet at or before air valve, which acts as a throttle:		
627,372	261	51
804,025	48	155.1
815,712	48	155.1
816,848	48	155.1
832,183	48	150.3
863,251	48	155.2
1,014,188	48	155.1
1,037,834	48	155.1
1,038,804	48	155
1,045,613	48	155
1,067,449	48	155.1
1,080,118	48	150.3
1,088,974	48	155.1
1,108,181	48	150.1
1,116,581	48	155.1
1,117,233	48	150.2
1,131,312	48	155.1
1,143,227	48	155.1
1,144,549	123	106
1,161,437	48	155.1
1,165,224	48	155.1
1,171,074	48	150.3
1,172,338	48	155.2
New class 7.3, fuel inlet between automatic air valve and throttle:		
622,891	C. R.	.....
657,738	123	122
666,623	48	155
673,901	123	122
658,349	123	119
759,396	48	155.1
774,079	48	155.2
785,622	48	155.2
792,628	48	155.2
794,502	48	155.1
796,723	48	155.2
806,434	123	119
820,583	48	155.2
822,681	48	155.2
829,345	48	155.1
831,547	48	155.2
852,675	48	155.2
886,760	48	155.2
896,559	48	155.2
911,105	48	155.2
921,410	48	155.2
929,327	48	155.2
947,712	48	155.1
962,140	48	155
966,381	48	154.1
983,307	C. R.	.....
986,700	48	150.2
993,097	48	155.1
996,897	48	155.2
1,018,126	48	155.2
1,027,768	48	154.1
1,038,699	48	155.2
1,039,229	123	180
1,041,099	48	155.2
1,080,168	48	155.2
1,085,239	48	150.1
1,106,258	48	156.1
1,124,918	48	155.2
1,116,673	C. R.	.....
1,129,864	48	155.2
1,132,580	48	150.1

United States patents—Continued.

Patent No.	Present official— Class.	Subclass.
New class 7.3, fuel inlet between automatic air valve and throttle—Continued.		
1,133,845	123	122
1,141,796	48	168
1,160,837	48	150.2
1,178,866	48	154.1
1,190,540	48	154
New class 7.4, fuel inlet swept by air entering through air valve:		
783,902	48	154.1
	48	155.2
791,447	48	155.2
799,232	48	148
800,647	48	155.2
855,574	48	155.2
859,719	48	155.1
875,716	48	155.2
878,411	48	155.2
904,659	48	154.1
910,379	48	155.2
916,103	48	155.2
924,200	48	155.2
925,973	48	155.2
926,533	48	155.2
928,828	48	155.1
943,197	48	155.2
950,278	48	155.1
960,697	48	155.1
963,187	48	155.1
976,344	48	155.1
973,877	48	155.2
996,919	C. R.	
997,169	48	155.2
1,000,398	48	154.1
1,005,300	48	155.2
1,020,931	48	155.1
1,023,470	48	155.1
1,033,503	123	7
1,042,982	48	155.2
1,052,051	48	155.1
1,084,028	C. R.	
1,088,181	48	155.1
1,093,901	48	155.2
1,095,384	48	150.1
1,110,041	48	155.2
1,124,949	48	155.1
1,131,584	48	155.2
1,140,000	C. R.	
1,148,247	48	148
1,157,541	48	155.1
1,180,152	48	150.2
1,180,389	48	155.2
1,180,939	48	155.1
1,184,873	48	155
	48	155.1
New class 7.5, variable float chamber pressure:		
877,890	48	150.1
993,096	48	154.1
1,103,802	48	155.1
1,167,457	48	148
New class 8, carburetors, proportioning flow, aspirating, single fixed fuel inlet, multiple air inlets, valved for regulating:		
751,434	123	127
828,228	48	155.1
844,899	123	124
911,349	48	155.1
920,642	48	155.2
929,260	48	155.2
944,043	48	155.2
970,916	48	155.2
983,836	48	155.1
985,670	48	155.2
997,232	123	124
998,355	123	98
New class 8, carburetors, proportioning flow, aspirating, single fixed fuel inlet, multiple air inlets, valved for regulating—Continued.		
1,000,054	48	155.2
1,001,969	48	155.2
1,005,300	C. R.	
1,019,128	48	155.2
1,020,059	48	155.2
1,029,685	123	98
1,062,688	C. R.	
1,073,473	48	155.2
1,082,466	48	155.1
1,089,105	48	150.3
1,096,819	123	73
1,099,086	48	148
1,104,453	48	168
1,104,782	48	150.1
1,105,637	123	119
1,119,757	48	155.2
1,122,703	48	148
1,123,027	48	155.1
1,123,955	48	155.1
1,127,992	48	155.2
1,128,717	123	52
1,129,103	48	155.1
1,134,942	48	150.3
1,135,046	48	155.1
1,137,307	48	155.1
1,150,782	48	155 1
1,151,989	48	150.2
1,173,378	48	155.1
1,173,395	48	155.1
New class 8.1, two air inlets, fixed primary, throttles controlled secondary, regulating air valve:		
730,649	48	155.1
733,525	48	148
757,716	48	155.1
775,553	48	155.1
794,851	48	155.1
825,531	C. R. 2	
832,532	C. R.	
840,204	48	155.2
842,052	48	155.1
851,283	48	155.1
856,527	48	155.1
889,558	48	155.1
908,764	48	155.1
924,673	48	155.1
954,530	48	155.1
959,066	C. R.	
985,703	123	100
1,011,565	48	155.1
1,060,053	123	34
1,064,514	123	100
1,081,203	48	155.1
1,097,401	48	155.1
1,119,181	48	155.1
1,123,027	48	155.1
1,143,333	48	155.1
1,143,898	48	155.1
1,149,597	123	108
1,154,530	48	150.1
1,184,858	48	155.1
1,184,859	48	155.1
1,185,273	48	155.2
Class 8.2, two air inlets, fixed primary, automatic secondary regulating air valve:		
649,324	48	155.1
664,841	48	155.2
713,146	48	155.2
734,421	123	123
741,810	48	149
759,001	123	122
	48	155.1
785,558	48	155.2

United States patents—Continued.

Patent No.	Present official— Class.	Subclass.
Class 8.2, two air inlets, fixed primary, automatic secondary regulating air valve—Continued.		
792,878	48	150.2
796,712	C. R.	
802,216	48	155.2
810,792	48	155.2
823,742	C. R.	
831,832	123	124
	48	155.2
835,880	48	155.2
850,339	48	155.2
856,958	48	155.2
857,275	48	155.2
860,848	48	155.2
864,687	48	155.2
882,170	123	108
886,526	48	155.1
888,487	48	155.2
888,965	48	155.2
898,361	48	155.1
899,109	48	155.2
900,098	48	155.1
900,731	48	155.2
907,279	48	155.1
912,083	48	155.2
913,354	48	155.1
926,598	48	155.2
927,529	48	155.2
928,042	48	155.2
932,360	48	155.2
932,860	48	155.2
942,977	48	155.2
943,242	48	155.2
945,167	48	155.1
968,597	48	155.2
974,076	48	155
976,568	48	155.2
976,692	48	155.1
977,377	48	155.2
979,908	48	150.2
981,156	48	155.2
984,276	48	155.2
997,233	48	155.2
997,929	48	150.2
1,003,994	48	155.2
1,006,663	48	155.2
1,013,082	48	155.2
1,016,251	48	155.1
1,017,750	C. R. 2	
1,018,776	48	155.2
1,035,937	48	155.2
1,038,262	48	155.2
1,041,480	48	155.2
1,043,342	48	148
1,043,692	48	155.2
1,044,569	48	155.2
1,044,576	48	155.2
1,044,594	48	155.2
1,046,244	48	155.2
1,053,145	48	155.2
1,059,368	48	155.2
1,061,626	48	148
1,062,273	48	155.2
1,064,445	48	155.2
1,065,640	48	148
1,065,948	48	148
1,067,502	48	155.2
Re. 13,784		
1,067,906	123	122
1,069,399	48	150.1
1,069,671	48	155.2
1,071,858	48	155.2
1,073,695	48	155.2
1,076,827	48	155.2
1,078,169	48	155.2
1,078,766	48	155.2
1,079,338	C. R.	
Class 8.2, two air inlets, fixed primary, automatic secondary regulating air valve—Continued.		
1,080,645	48	155.2
1,086,287	48	155.2
1,089,423	48	155.2
1,090,556	48	155.2
1,092,282	48	155.2
1,093,627	48	155.2
1,095,212	48	155.2
1,095,326	48	155.2
1,099,714	48	155.2
1,104,975	48	155.2
1,105,142	123	108
1,106,115	123	136
1,106,145	48	155.2
1,106,881	123	122
1,107,693	48	155.2
1,109,356	48	155.2
1,112,257	123	119
1,115,543	48	155.2
1,118,919	48	155.1
1,120,303	48	155.2
1,130,915	C. R. 2	
1,131,371	C. R.	
1,133,452	48	148
1,135,315	48	155.1
1,136,368	C. R.	
1,137,057	123	122
1,137,135	48	150
	48	150.1
1,139,364	123	78
1,140,064	48	148
1,141,066	48	155.2
1,142,793	48	150.1
1,143,092	48	150.2
1,143,961	48	150.1
1,145,138	48	155.2
1,148,461	48	155.2
1,150,619	48	148
1,155,232	48	155
1,156,149	48	155.2
1,158,435	48	150.2
1,160,239	48	150.1
1,162,576	48	155.1
1,166,595	48	155.2
1,167,320	48	155.2
1,171,145	123	122
1,172,263	48	150.1
1,172,432	48	155.2
1,176,729	48	155.2
1,180,379	48	155.2
1,184,695	48	150.2
New class 8.3, two air inlets, both with regulating valves, one automatic, the other throttle-controlled:		
1,060,545	48	154.1
New class 8.4, two air inlets, both with automatic regulating valves:		
667,910	48	155.2
762,707	48	148
790,173	48	155.2
806,830	48	155.2
890,494	48	155.2
960,080	48	155.2
989,697	48	155.2
1,136,675	48	148
1,141,258	48	150.1
	48	156
1,159,933	48	148
1,183,137	48	155.2
New class 8.5, two air inlets, both with throttle-controlled regulating valves:		
714,597	48	155.1
776,406	48	155.1

United States patents—Continued.

Patent No.	Present official— Class.	Subclass.
New class 8.5, two air inlets, both with throttle-controlled regulating valves—Continued.		
846,471	C. R.	
856,638		
871,730	48	154.1
905,012	48	155
964,657	48	148
976,322	48	155.1
985,431	48	155.1
988,900	48	155.1
993,516	261	38
1,014,328	123	100
1,072,565	48	155.1
New class 8.6, mixed flow:		
423,214	48	154.1
595,552	123	132
802,038	48	155.1
952,326	48	154.1
1,061,835	48	150.3
1,095,510	48	155.1
New class 9, carburetors, proportioning flow, aspirating, multiple fixed fuel inlets, single air inlet with regulating valve:		
1,177,538	48	150.1
New class 9.1, fuel inlets act progressively with opening of single automatic air-inlet regulating valve:		
1,006,130	48	150.3
1,011,960	48	150.3
1,074,574	48	150.3
1,074,575	48	150.3
1,119,076	48 48	154 150.3
1,130,474	48	150.3
1,130,950	48	150.3
1,173,246	48	150.3
1,185,492	48	150.3
New class 9.2, fuel inlets act progressively with opening of single throttle controlled air-inlet regulating valve, or air valve acting as throttle:		
858,437	48	150.3
881,279	48	155.1
881,800	48	150.3
989,515	48	150.3
1,010,051	48	150.3
1,073,179	48	150.3
1,089,524	48	150.3
1,094,674	48	150.3
1,142,763	48	155.1
1,159,851	48	150.3
1,162,308	48	150.3
1,183,221	48	150.1
1,183,222	48	150.3
New class 9.3, fuel standpipes:		
1,130,700	48	150.3
1,147,337	48	150.3
New class 9.4, two fuel inlets, one main and one idling:		
825,499	48	155.1
1,016,108	48	150.3
1,147,940	48	150.3
New class 9.5, tilting fuel chamber, radially disposed fuel inlets:		
989,307	48	150.3
1,065,977	48	150.3
1,074,577	48	150.3
1,100,879	48	150.3
1,101,869	48	150.3
1,184,267	48	150.3

Patent No.	Present official— Class.	Subclass.
New class 10, carburetors, proportioning flow, aspirating, multiple fixed fuel inlets with air inlets, valved for regulation:		
979,700	48	150.3
1,014,551	48	150.3
1,099,547	48	150.3
1,163,393	48 48	150.1 150
1,166,112	48	150.3
New class 10.1, main fuel inlet, with supplementary high-speed jet:		
923,121	48	150.3
958,476	48	150.3
978,558	48	150.3
993,770	48	150.3
1,022,703	48	150.3
1,041,481	48	150.3
1,046,434	48	150.3
1,078,349	48	150.3
1,089,089	48	150.3
1,090,208	48	150.3
1,090,209	48	155.1
1,099,293	48	150.3
1,107,849	48	155.2
1,119,078	48	155.2
1,120,763	48	155.1
1,128,778	48	150.3
1,134,531	48	155.2
1,134,532	48	155.2
1,159,423	48	155.2
1,163,223	48	150.3
1,177,318	48	155.2
1,178,473	48	154.1
1,180,518	48	150.3
New class 10.2, main fuel inlet, with supplementary idling jet:		
1,055,352	48	155.2
1,104,560	48	150.3
1,153,487	48	150.3
1,166,308	48	150.3
1,181,128	48	150.3
New class 10.3, multiple carburetor, progressive, by throttle, with individual automatic inlet, regulating valves:		
871,741	48	150.3
881,416	48	150.3
891,219	48	150.3
900,604	48	150.3
1,001,950	88	150.3
1,068,091	48	150.3
1,113,551	48	150.3
1,152,031	48	150.3
1,172,701	48	150.3
1,179,278	48	150.1
1,180,483	48	150.3
1,183,081	48	150.3
New class 10.4, multiple carburetor, progressive, by vacuum, with individual automatic air inlet regulating valves:		
1,040,414	48	150.3
1,108,245	48	150.3
New class 10.5, fuel standpipe:		
961,481	48	150.3
1,010,116	48	150.3
1,133,527	48	148
New class 10.6, mixed flow:		
973,755	48	155.2
1,040,619	48	150.3

United States patents—Continued.

Patent No.	Present official— Class.	Subclass.
New class 10.6, mixed flow—Continued.		
1,103,903	48	150.3
1,123,469	48	150.3
1,168,513	48	158.3
1,169,616	48	150.3
New class 11.1, single fuel inlet valve, throttle controlled:		
583,508	123	123
727,972	48	155.1
746,449	48	155.1
771,985	48	155.1
873,392	48	155.1
917,264	48	168
984,109	48	154.1
1,055,042	48	155.1
1,097,039	C. R.	.....
1,120,183	48	150.3
1,124,607	48	150.3
1,126,690	48	154.1
1,153,999	48	155.1
New class 11.2, single fuel inlet, independently controlled by air flow or vacuum:		
725,741	48	155
746,119	48	148
946,632	48	154.1
973,262	48	150.3
1,065,503	48	155.1
1,085,194	48	154.1
1,092,079	48	154.1
1,111,763	48	155.1
1,138,829	48	150.1
1,155,407	48	150.1
New class 11.3, mixed flow:		
771,006	48	155.1
New class 12, carburetors, proportioning flow, aspirating, single fuel and air inlets, both with regulating valves:		
548,922	C. R. 2	.....
839,707	C. R.	.....
876,210	48	154.1
973,855	48	155.1
1,007,669	C. R.	.....
1,032,547	48	154.1
1,045,251	48	155
1,061,995	48	155.1
1,123,876	48	144
1,155,457	C. R.	.....
1,169,574	48	154.1
New class, 12.1, valved fuel inlet beyond air-inlet valve, acting as throttle, fuel valve controlled by air valve:		
623,568	123	132
624,594	C. R. 2	.....
654,894	48	155
674,034	48	150.3
677,283	C. R.	.....
695,060	123	131
711,902	123	132
727,565	123	102
745,063	48	155.1
751,913	261	44
775,614	48	168
779,490	123	123
791,810	48	155.1
795,273	123	129
807,144	48	155
807,479	C. R.	.....
816,477	48	154.1
818,853	261	41
836,764	48	155
879,884	C. R. 2	.....
889,032	123	108
894,225	48	150
New class 12.1, valved fuel inlet beyond air-inlet valve, acting as throttle, fuel valve controlled by air valve—Continued.		
909,490	48	154.1
911,143	48	155.1
920,979	48	150.3
926,039	48	155.1
936,064	48	154.1
958,128	48	155.1
968,215	48	155
976,911	48	154.1
977,813	48	150.2
980,668	48	155.1
983,999	48	155.1
988,638	48	155.1
999,686	48	154.1
1,000,518	48	155.1
1,003,019	123	131
1,013,955	C. R.	.....
1,014,945	48	148
1,028,723	48	155.1
1,084,693	C. R.	.....
1,086,694	48	155.1
1,099,996	C. R.	.....
1,107,713	48	155.1
1,107,698	48	155.1
1,121,651	48	150.1
1,145,824	48	150.3
1,157,363	48	155.1
1,171,235	48	155.1
1,172,595	48	154.1
1,183,125	48	155.1
1,184,541	48	155.1
1,190,124	48	156
New class 12.2, valved fuel inlet between air-inlet valve and throttle, both fuel and air valves controlled by the throttle:		
780,949	48	155.1
795,357	48	156.1
805,979	123	132
813,683	48	155.1
821,061	48	155.1
827,094	48	155
848,425	48	154.1
865,522	48	155.1
883,740	48	156.1
907,881	48	155.1
910,326	48	155.1
922,145	C. R.	.....
937,536	48	155.1
956,882	48	155.2
958,897	48	155.1
973,937	48	155
983,247	48	155.1
983,541	48	155.1
993,210	48	154.1
1,000,451	48	155.1
1,005,491	48	155.1
1,007,729	48	155.1
1,011,606	48	150.3
1,012,781	48	155.1
1,018,164	C. R.	.....
1,021,198	48	155.1
1,027,459	48	156.1
1,033,886	48	155
1,042,528	48	155
1,042,606	48	155
1,052,397	48	155.1
1,065,067	48	155.1
1,072,492	48	155.1
1,076,268	123	123
1,080,815	48	150.3
1,085,003	48	155.1
1,106,200	48	155.1

United States patents—Continued.

Patent No.	Present official— Class.	Subclass.
New class 12.2, valved fuel inlet between air-inlet valve and throttle, both fuel and air valves controlled by the throttle—Continued.		
1,120,845	48	155.1
1,125,069	48	150.3
1,129,129	48	155.1
1,135,544	48	155.1
1,143,511	48	155.1
1,153,891	48	155.1
1,155,094	123	123
1,175,516	48	148
1,178,296	48	155.1
1,183,587	48	150.3
1,185,574	48	155.1
New class 12.3, valved fuel inlet at or in front of air valve, acting as throttle, fuel valve controlled by air valve:		
626,120	123	103
626,121	C. R. 2	.....
635,218	C. R. 2	.....
648,001	C. R. 2	.....
746,833	48	154.1
855,582	C. R.	.....
862,574	123	100
873,392	C. R.	.....
887,422	123	129
904,855	C. R.	.....
930,742	48	155.1
977,044	48	150.3
1,038,921	48	155.1
1,053,136	48	155.1
1,140,232	48	155.1
1,151,578	48	155.1
1,152,173	48	150.3
1,184,923	48	150.3
1,190,573	48	150.3
New class 12.4, valved fuel inlet between automatic air-inlet valve and throttle, fuel valve controlled by throttle:		
747,264	C. R.	.....
756,074	48	150.3
Re. 12,611		
792,670	48	150
823,608	48	155.1
835,773	C. R. 2	.....
920,231	48	155.1
947,633	123	35
961,590	48	155.2
1,010,714	48	155.2
1,018,164	48	155.2
1,019,160	48	155.2
1,042,982	48	155.2
Re. 13,837		
1,044,245	48	155.2
1,066,608	48	155.2
1,103,178	48	155.1
1,112,641	48	150.1
	48	154.1
1,126,127	48	155.1
1,132,314	48	155.1
1,155,457	48	150.3
1,176,816	48	148
1,181,356	48	154.1
1,190,125	48	156
New class 12.5, valve fuel inlet between automatic air-inlet valve and throttle, fuel valve controlled by automatic air valve:		
687,840	261	50
735,483	123	123
770,559	48	155
807,479	48	154.1
818,853	48	150.3
826,531	48	154.1
	48	155.1

Patent No.	Present official— Class.	Subclass.
New class 12.5, valve fuel inlet between automatic air-inlet valve and throttle, fuel valve controlled by automatic air valve—Continued.		
839,707	48	154.1
876,287	48	155.2
892,155	48	154.1
895,709	48	150.3
901,345	48	150.3
906,671	261	57
926,848	48	154.1
941,406	48	154.1
941,424	48	150.3
954,735	48	150.3
971,038	48	154.1
973,947	48	154.1
982,297	48	150.3
984,874	48	154.1
988,502	48	154.1
994,195	48	154.1
995,623	48	154.1
996,981	48	154.1
997,417	48	154.1
998,993	48	154.1
1,001,847	48	154.1
1,003,101	48	154.3
1,006,411	48	154.1
1,010,003	48	154.1
1,014,319	48	154.1
1,016,169	48	154.1
1,020,270	48	154.1
1,032,307	48	154.1
1,033,130	48	154.1
1,040,528	48	154.1
1,042,017	48	154.1
1,046,111	48	154.1
1,049,417	48	154.1
1,049,887	48	154.1
1,050,059	48	154.1
1,059,501	48	154.1
1,064,887	48	154.1
1,078,413	48	154.1
1,078,592	48	154.1
1,084,693	48	154.1
1,088,231	48	154.1
1,097,787	48	154.1
1,103,864	48	155.1
	48	154.1
1,104,494	48	154.1
1,115,951	48	154
	48	154.2
1,116,673	48	155.1
1,119,821	48	155.1
1,120,128	48	154.1
	48	154
1,123,048	48	154.1
1,125,525	48	154.1
1,126,249	48	154.1
1,130,350	48	150.3
1,133,754	48	155.1
1,135,211	48	150.3
1,138,204	48	154.1
1,139,914	48	154.1
1,140,525	C. R.	.....
1,141,085	48	154.1
1,143,779	48	150.2
1,145,172	48	154.1
1,145,871	48	154.1
1,147,644	48	150.2
1,149,291	48	150.3
1,159,005	48	154.1
1,159,029	48	154.1
1,159,049	48	154.1
1,161,374	48	154.1
1,162,680	48	150.3
1,166,173	48	148
1,167,426	48	154.2
1,168,752	48	154.1

United States patents—Continued.

Patent No.	Present official— Class.	Subclass.
New class 12.5, valve fuel inlet between automatic air-inlet valve and throttle, fuel valve controlled by automatic air valve—Continued.		
1,168,783	48	154.1
1,171,679	48	154.1
1,171,716	48	154.1
1,172,397	48	148
1,176,600	48	150.1
1,178,832	48	150.3
1,179,568	48	154.1
1,179,913	48	154.1
1,182,714	48	148
1,183,183	48	150.3
1,190,715	48	155.1
New class 12.6, valved fuel inlet between air-inlet valve and throttle, fuel valve controlled independently by vacuum or air flow:		
838,085	123 / 48	124 / 155.2
918,607	48	154.1
1,048,954	48	154.1
1,087,218	48	154.1
1,091,426	48	155.1
1,126,159	48	154.1
1,133,904	48	150.3
1,137,727	C. R.	.....
1,148,247	C. R.	.....
New class 12.7, variable float chamber pressure:		
1,010,068	48	150.3
1,010,184	48	154.1
1,025,816	48	154.1
1,029,897	48	154.1
New class 13, carburetors, proportioning flow, aspirating, single fuel and multiple air inlets, both with regulating valves:		
813,653	48	155.2
817,903	48	155.1
849,538	C. R.	.....
876,579	123	123
889,487	48	155.1
1,061,440	48	154.1
1,078,582	48	150.3
1,087,218	C. R.	.....
1,118,805	48	150.2
1,132,934	48	154.1
1,154,530	123	123
1,158,324	48	154.1
1,178,064	48	154.1
1,191,156	48	156
New class 13.1, valved fuel inlet, fixed primary air, fixed or valved secondary air inlet, throttle control of fuel inlet valve and of secondary air valve:		
886,365	48	155.2
892,499	48	150.3
950,423	48	154.1
955,292	48	155.1
976,258	48	150.3
1,029,706	48	155
1,036,301	48	155
1,065,462	48	155.1
1,088,064	48	155.1
1,116,192	C. R.	.....
1,125,339	48	155.1
1,126,340	48	155
1,140,721	48	155.1
1,148,485	48	150.3
1,156,084	48	150.3
1,163,749	48	155
1,191,522	48	156
1,192,213	48	155.1
New class 13.2, valved fuel inlet, valved primary and secondary air inlets, throttle control of both air inlets and fuel inlet valve:		
860,908	48	155.2
1,134,366	48	148
1,162,111	48	155.1
1,179,663	48	155.1
New class 13.3, valved fuel inlet, fixed primary and throttle-controlled secondary air inlets, fuel valve controlled by the vacuum or air flow independently:		
1,079,947	48	154.1
1,081,222	48	154.1
1,125,238	48	155.1
1,131,157	C. R.	.....
New class 13.4, valved fuel inlet, fixed primary and automatic valved secondary air inlets, fuel valve controlled by the throttle:		
744,257	48	155.2
870,052	48	155.2
971,689	48	155.2
971,862	48	154.1
1,042,004	48	155.2
1,052,917	48	155.2
1,057,506	48	155.1
1,096,569	48	155.2
1,106,226	48	155.2
1,106,802	123	132
1,118,533	48	155.2
1,122,572	48	155.2
1,126,218	48	155.2
1,140,071	48	155.1
1,140,722	48	155.1
1,152,134	48	150.1
1,171,401	48	155.2
1,173,762	48	155.1
New class 13.5, valved fuel inlet, fixed primary and automatic valved secondary air inlets, fuel valve controlled by the automatic secondary air valve:		
844,894	48	155.2
855,170	48	155.2
876,287	C. R.	.....
886,545	48	154.1
920,731	C. R.	.....
962,649	48	154
976,237	C. R.	.....
979,555	48	154.1
981,863	48	154.1
994,191	48	154.1
1,010,185	48	154.1
1,014,082	48	154.1
1,022,702	48	150.3
1,030,343	48	154.1
1,038,050	48	155.2
1,042,017	C. R.	.....
1,046,111	C. R.	.....
1,067,623	48	154.1
1,069,389	48	154.1
1,069,817	48	150.3
1,071,003	48	154.1
1,077,256	48	154.1
1,078,413	C. R.	.....
1,078,590	48	154.1
1,078,591	48	154.1
1,080,696	48	154.1
1,095,402	48	154.1
1,106,226	C. R.	.....
1,111,224	48	150.1
1,114,222	48	154.1
1,118,126	48	148
1,120,573	48	154

United States patents—Continued.

Patent No.	Present official— Class.	Subclass.
New class 13.5, valved fuel inlet, fixed primary and automatic valved secondary air inlets, fuel valve controlled by the automatic secondary air valve—Continued.		
1,120,573	48	154.1
1,130,502	48	148
1,135,689	48	154.1
1,140,525	48	154.1
1,156,726	48	148
1,156,823	48	154.1
1,158,359	48	154.1
1,158,494	48	148
1,165,359	48	154.1
1,167,217	48	150.2
1,179,701	48	150.2
1,183,538	48	154.1
1,184,696	48	154.1
New class 13.6, valved fuel inlet, valved primary and secondary air, both automatic, fuel valve controlled by one or both automatic air inlet valves:		
917,126	48	154.1
1,022,326	48	155.2
1,036,536	48	155.1
1,084,954	48	154.1
1,087,187	48	154.1
1,105,134	48	155.2
1,125,525	C. R.	----------
New class 14, carburetors, proportioning flow, aspirating, multiple fuel and air inlets, both with regulating valves:		
1,123,508	122	123
1,163,749	48	155.1
New class 14.1, two fuel inlets, one fixed main and one valved supplementary high-speed jet, two air inlets, one fixed primary and one valved secondary:		
1,038,040	48	150.3
1,164,661	48	150.3
1,172,031	48	150.3
1,179,286	48	155.2
1,179,381	48	150.3
New class 14.2, multiple carburetors, progressive by throttle or vacuum:		
1,046,014	48	150.3
1,120,184	48	150.3
1,120,185	48	150.3
1,157,116	48	150.1
New class 15.1, thermostatic controls:		
1,017,572	48	149
1,091,521	48	149
1,105,016	123	127
1,110,131	48	150
1,133,872	----	----------
1,135,270	48	154.1
1,137,219	48	148
1,142,824	48	148
1,143,230	123	124
1,145,476	48	149
1,149,743	48	155.1
1,165,087	48	155.1
1,189,786	123	124
New class 15.2, barometric controls:		
1,049,038	48	155.1
1,098,783	48	144

REPORT NO. 11.

PART IV.

STRUCTURAL CHARACTERISTICS AND FUNCTIONAL OPERATION OF EACH OF THE NEW CLASSES AND SUB-CLASSES OF PROPORTIONING-FLOW CARBURETORS.

By Charles E. Lucke.

GENERAL.

Carburetors, as devices or appliances for making a suitable explosive mixture of air with a volatile liquid fuel, were not created with any definite class idea of the mixture requirements of the engine or of the mixture-making characteristics of the various physical principles of functional operation and the mechanical limitations on the execution of each. At the time when oil refining began to produce the light petroleum distillates, now so generically classed as gasoline, in any quantity internal-combustion engines were in operation, using manufactured illuminating gas and natural gas as fuel. Something was known of these engines through the familiarity of use, and the means of making explosive mixtures of such gases and air as the working fluid for their operation were understood. Most of these engines were small; all were stationary and operated at constant speed; and practically all, if not quite so, were governed by hit-and-miss appliances, according to which the quantity of fuel and air per suction stroke is constant when any is taken at all, and no graduation of the charge per stroke with load. Under such circumstances the mixer and proportioner could be of the simplest conceivable sort—no more than two holes, one through which the gas could flow and the other for the air, with a manual adjustment for the size or area of one or both to secure the desired working proportions. Usually the gas supply came to the engine under pressure—whatever pressure existed in the mains of the city or in the natural-gas distributing pipes—so it is natural that a periodic operating valve should be added to the gas connection so gas would not flow out except during engine suction, the gas valve being opened during the suction stroke, either automatically by the suction or mechanically from the valve gear by a direct connection to the main inlet valve motion. Adjustment of proportionality of gas to air and its maintenance under such conditions of use is no more difficult than for steady, continuous flow, and two openings, the relative area of which is manually adjustable, will quite accurately fix the proportions, whether a periodic fuel stop valve be added or not. The proportions will be maintained so long as the gas pressure does not change, a condition met by the addition of a gas-pressure governor to the system.

This situation is most significant, because it explains not only the origin of one large class of early engine carburetors, but also the trend of development from this group of carburetors must necessarily have been strongly influenced by the nature of the start. This influence of the early carburetor, designed to replace the gas mixer and proportioner of early hit-and-miss gas engine to make it a corresponding gasoline engine, has been doubly strong on the rest of the art because such engines are still in use and others have appeared for which the same sort of carburetor or "gasoline mixer" is equally adapted. Such, for example, is the case with the small single cylinder two-cycle boat engine, where a constant charge per stroke is taken and the speed is normally constant and simplicity and cheapness in all parts are more important than high efficiency or light weight per horsepower.

Assuming a grade of gasoline such that the amount that air could support in combustion would immediately vaporize when mixed with it, a grade easily obtained in the early oil refining days, then feeding and proportioning such a fuel to its air involves no different problem than had already been solved for gaseous fuel. Therefore, there appeared quite early this class of carburetors, now often called "mixers," which involved at first a supply of gasoline under pressure maintained by an elevated tank, a fuel valve periodically opening with the engine suction valve to stop the fuel flow between suctions, a manually adjusted restricting valve in the gasoline line, always open for securing the desired proportions, and arranged so that the gasoline could run into the air in any way at all when it did flow. The variations in structural form that this simple arrangement can take are somewhat surprising as revealed by the cases under class 1 and its subclasses, from which practically all later schemes and modern practice in gasoline proportioning flow carburetors may be said to have been developed.

Of course, a pressure supply of such a volatile fuel involves elements of risk, both of explosion and fire, as well as trouble in operation when valve leakage between strokes becomes appreciable, which need only to be recognized to inaugurate modifications. These changes are found to follow two lines; first, the use of a pump directly, and second, the indirect use of a pump to a small auxiliary fuel chamber from which the fuel is taken by the aspirating action of the vacuum that results from the flow of air through restricted inlet passages. The suction stroke of the engine induces a flow of air through the air passages to the cylinder and may be made to actuate an air motor driving a fuel pump to constitute a proportioning flow carburetor, as described in the cases of class 2. Proportionality is to be secured with this kind of apparatus by the relation between the fuel volume displacement of the pump and the air volume passing through and actuating the air motor. The pump may draw fuel directly from a main tank at a lower level than the engine, or from a small auxiliary tank or chamber kept supplied by a second feed pump, or the pressure supply may be retained. From such a small auxiliary tank or chamber, maintained automatically at a constant level by float valves, diaphragm valves, or overflow pipes, and supplied from a low level main tank by a feed pump or from a pressure supply, the fuel may be caused to flow into the air by the

vacuum developed in the latter by its flow, the fuel inlet to the air being above the fuel level in the constant level chamber.

This is a reasonably logical step and may be carried out with the same manually adjusted, but otherwise fixed and constantly open, air and fuel inlets used previously with pressure-fuel supplies, modeled on the gas mixer for hit-and-miss gas engines, but omitting the periodic fuel valve as not needed because of the aspiration principle. In this way the aspirating proportioning-flow carburetors with single fixed inlets were started, and their various forms are illustrated by the cases of class 3 and its subclasses. These are still in use and improvements in them are still appearing. For engines that take a substantially constant charge per stroke or that are attended by operators capable of modifying the adjustment when the charge per stroke must be materially changed, they are good enough, otherwise they are not satisfactory. They are now divisible into two groups with reference to the constant-level chamber and its fuel supply, which division does not affect their proportionality characteristics at all, the stationary-engine group almost universally, but not quite, uses an overflow cup, supplied by a constant displacement engine-driven pump from an underground tank, while the transportation engine, when it uses this sort of carburetor at all, is provided with a pressure supply of fuel to a float chamber; this is the case with marine engines, but some tractors, especially those with the hit-and-miss control, still use the pump and overflow cup.

If the gasoline engine requiring a graduation of supply per suction stroke and taking a charge for every such stroke, graduated in quantity to both its load at constant speed and to its speed at any load, had not been developed, there would never have been any real carburetor problem. The wide variations in number and size of cylinder, with their corresponding changes in suction pulsations added to the variations of flow rate due to both load and speed, make the problem a real and difficult one. Without the present-day necessity of constant mixtures, not only for stationary engines requiring close speed regulation at all loads, to be secured only by throttle governors imposing widely varying flow rates on their carburetors, but also for transportation engines of the marine, railroad, automobile, tractor, and aero classes, requiring wide variations in both speed and torque, with correspondingly wide variations in carburetor-flow rates without changing the mixture proportions, the carburetor would undoubtedly have remained a chamber with two fixed or adjustably fixed holes, one for fuel and one for air. Such a thing as a carburetor is quite useless for variable flow service even with a fuel of constant physical properties used at a constant altitude or barometric pressure and under constant air and fuel temperatures. Eliminating these last factors, there still remains a problem of very considerable magnitude and great difficulty, the design of variable flow-proportioning carburetors, and no better illustration of this difficulty can be found than the complexity and large number of the patents on the subject, on the one hand, coupled with the still present operator's difficulties with the commercial products of the present day, on the other.

All the cases from class 4 to class 14, inclusive, are concerned with various means of establishing and maintaining the proportionality

in variable-flow carburetors without any effort at automatic control or correction for densities or fuel viscosities, to which subject but little attention has as yet been paid, as is indicated by the few cases of class 15. The effort to solve the problem of the proportioning-flow carburetor used with varying-flow rates is more or less logically analyzed by the new class groupings with their various subclasses, all of them starting with the now well-known assumption of fact, that no single fixed fuel inlet and single fixed air inlet will suffice, the ratio of fuel to air increasing regularly or irregularly with increase in flow rate in such a structure.

To correct this tendency toward an increasing percentage of fuel in the mixture with increasing flow rates, structural modification of the two simple fixed inlets is necessary, and these modifications are divisible into two groups. It is clear that once the mixture has become overrich after an increase in flow rate, the original proportion can be restored, first, by reducing the vacuum at the fuel outlet through an increase of the air inlet by a graduating valve or a movement to a point of less velocity, or by reducing the pressure on the fuel surface in the constant level cup, or in general the net fuel-flow head, and, second, by reducing the area of the fuel inlet by a graduating valve. These two ways of compensation are typical of the two broad group divisions—first, compensation by control of fuel-flow head; second, compensation by control of fuel-flow area. Of course, both may be utilized at the same time, and in any one carburetor many of the several different means of accomplishing both are found operating simultaneously. It should be noted that the primary or basic way of controlling fuel-flow head is by the air vacuum at the fuel inlet without operating on the surface pressure of the fuel in its constant level chamber, and this control of vacuum at the fuel inlet to the carburetor is a matter of air-inlet valve area, number and location of inlets, though subject to some control by variations in internal position of fuel inlet or direction of the air flowing past it. The fundamental basis of all proportionality control in carburetors is, therefore, one of structural arrangement of fuel and air inlets, in number, location, and relative area adjustment, corresponding to change of flow rates. This idea is incorporated in the new classification where the several classes are distinguished one from another by the number of fuel or air inlets and by the presence or absence in them of a regulating valve to adjust the flow area of either to the flow rates. Subclasses include either important groups of special cases of the general class or cases of some additional means of fuel-pressure control above that afforded by the air-inlet arrangements of the general class. For example, classes 3 to 10, inclusive, all have fixed, nonvarying fuel-inlet areas in any number associated in classes 3 and 6, inclusive, with any number of fixed air inlets, and in classes 7 to 10, inclusive, with variable air inlets in any number, the air-inlet graduating valve being actuated in different ways in the several subclasses. Similarly, classes 11 to 14, inclusive, are all cases of variable fuel-inlet areas, where fuel graduating valves are used and actuated in the several subclasses in each of the typical ways. These several classes of variable fuel inlets are associated in class 11 with fixed air inlets in any number, and in classes 12 to 14, inclusive, with variable air inlets, having graduating valves.

Within any one class characterized by a specified number of air and fuel inlets, fixed or variable, the subclasses will indicate additional or special means of fuel-pressure variation with flow as, for example, float-chamber pressure control, which may be used with any combination or kind of inlets; likewise, mixed flow or the admission of a small amount of air to the fuel passage to break the vacuum to the necessary extent, the air and fuel flowing together mixed. Again, in each of the several classes of multiple fixed fuel inlets there may be a subclass for the special form of the fuel standpipe in which successive holes or outlets are brought into action as the vacuum increases somewhat equivalent to a varying fuel-inlet area, though only as head increases and as a result of it. Finally, in the several classes of multiple fuel there may appear subclasses representing two or more complete carburetors, each of another simpler class all the same, and brought into action successively to limit the flow variation in any one set of passages and thereby limit the necessity for the other sorts of compensation that are necessary with wider variations of flow in one; 10 such carburetor units in one multiple carburetor would limit the flow variations in each member to one-tenth as much as in a single similar one for a given total range of flow rates.

With this introduction on the general problem and plan of investigation of the efforts of inventors to solve it, as disclosed in the patent art, the several new classes and subclasses will be examined separately.

Class 1, carburetors, proportioning flow, fixed air and fuel inlets, periodic fuel valve.—This is the early developed class of carburetors designed to convert a gas engine into a gasoline engine by an almost identical device, smaller in proportion to the relative volumes of gasoline to gas for the same amount of air, and primarily intended for hit-and-miss stationary engines requiring no graduation of flow, and for pressure supplies of fuel, that require a shut-off valve to stop the flow between suction strokes. When this stop valve is open, the flow effect is that of a fixed fuel passage. This fuel valve, with or without a corresponding air valve, may be actuated in any one of several ways to be noted, primarily adapted to reasonably low-speed engines, and normally to a single cylinder, or to one such carburetor per cylinder.

One early case of a fuel valve actuated by an air-flow impact disk, movement of which does not affect the area of the air-flow passage, is shown on page 175 (581,930, May 4, 1897, Alderson), which illustrates the idea of alternative use in a similar way, of gas and gasoline, because a gas inlet is also provided with its own valve to be opened by the vacuum directly because it is large enough. This case also illustrates a different means of fixing and adjusting the fuel inlet area by limiting the lift of the fuel valve, the shoulder of which strikes the end of an adjustable sleeve. In this case the fuel is discharged into a freely open portion of the air inlet where the vacuum is negligible and the gooseneck fuel-supply pipe rising above the fuel valve indicates the intention to use a pressure supply of fuel under at least this much head. An air-flow disk located at the throat of a double-tapered air passage with another such disk on the same stem at the large diameter point immediately above it,

to produce the double effect of a prompt lift of the fuel valve formed at the end of the stem, and to spatter the fuel so it may mix with the air in the irregular passage, is the construction illustrated on page 176 (584,666, June 15, 1897, Bollee). Not only is this case interesting because of the construction but also because the patent is for a "motor vehicle," and is one of the early constructions of this, at the time, very new art. While the fuel valve is located in front of the air-inlet valve and is, therefore, subjected to none of the vacuum due to air-entrance resistance, it is nevertheless, by reason of the air-passage taper, subjected to the vacuum of the air velocity head, and the case is one of the very early examples of the use of velocity-head vacuum to influence fuel flow.

As showing the use of a pressure supply of fuel, the case on page 177 (611,341, Sept. 27, 1898, Starr & Cogswell) is interesting, because the elevated chamber is shown feeding the tubular fuel valve, the seat of which is lifted off by the entrance air valve beyond. As the fuel flows down it meets the air rising, but evidently complete vaporization was not regarded as assured, because a drainpipe is provided joining the cup overflow.

Location of a fuel valve on the supply side of an automatic air check valve is also illustrated on page 177 (688,367, Dec. 10, 1901, Tregurtha), which also shows a broad enlargement below the fuel inlet, over which the measured amount of fuel is intended to be evaporated by the air, a thing that could not be done at all with present-day gasoline. A contrary fuel flow arrangement with the same location of fuel valve on the supply side of the air check is shown on page 177. Here the fuel flows down with the air toward the cylinder. (703,937, July 1, 1902, Lizotte.) Use of a piston type of air valve to actuate the fuel valve is shown on page 178 (705,021, July 22, 1902, Bennett & Morewood) to avoid the difficulty of simultaneously making tight an air check and a rigidly attached fuel valve. A similar purpose is served by the spring of 703,937, July 1, 1902, Lizotte. Actuation of the fuel valve by the vacuum directly is shown on pages 177 and 178 (705,314, July 22, 1902, Blake), the diapraghm C rising with the vacuum and opening the fuel valve. This case also illustrates the use of primary and secondary air through two separate air inlets.

An illustration of a form especially adapted to the hit-and-miss engine is given on pages 178 and 179 (722,672, Mar. 17, 1903, Burger), where a governor controlled pawl carried on a sleeve about the air valve stem opens or does not open the fuel valve.

Direct attachment of the fuel valve to the main engine inlet is shown on page 179. (724,328, Mar. 31, 1903, Pivert.) Another case of air impact disk actuating the fuel valve is shown on page 179 (747,235, Dec. 15, 1903, Saris) in connection with two other interesting features, one, the constant level float chamber, the level in which is above the fuel valve, making the valve necessary, and the other, the hollow stem of the fuel valve, which accumulates fuel between suction strokes, discharging the accumulation with whatever comes past the regular needle valve. This is a sort of forerunner of the now common accelerating cup of modern carburetors that accumulates fuel during periods of low engine demand, discharging it quickly on a sudden increase in demand due to the opening of the throttle at a time when the mixture would otherwise tend to become lean by reason of the greater inertia of the fuel over the air.

(No Model.)

G. ALDERSON.

GAS MIXER.

No. 581,930 Patented May 4, 1897.

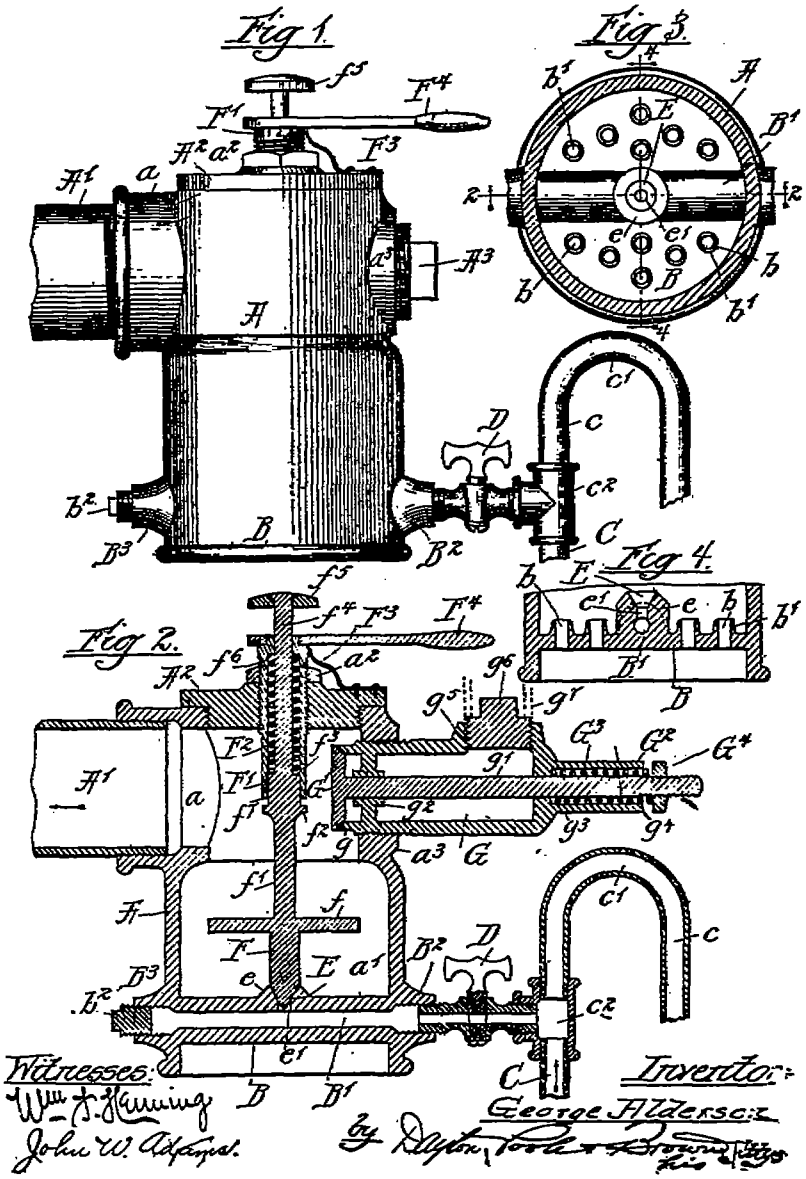

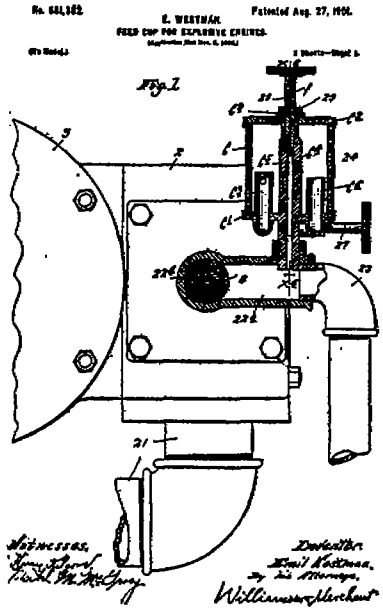
E. WESTMAN
Patented Aug. 27, 1896.
Witnesses.
Inventor.
Williams & Merchant

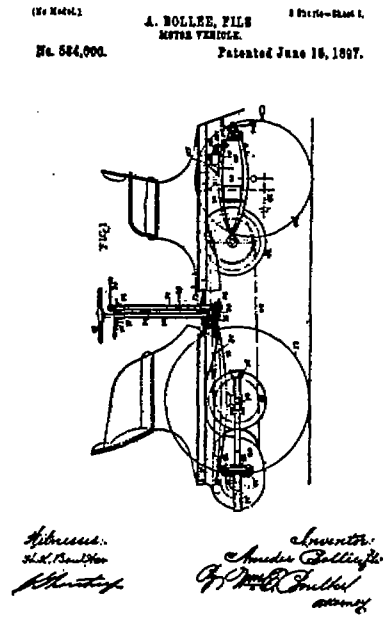
A. BOLLEE, FILS
MOTOR VEHICLE.
No. 584,000.
Patented June 15, 1897.
Witnesses.
Inventor.
Attorney

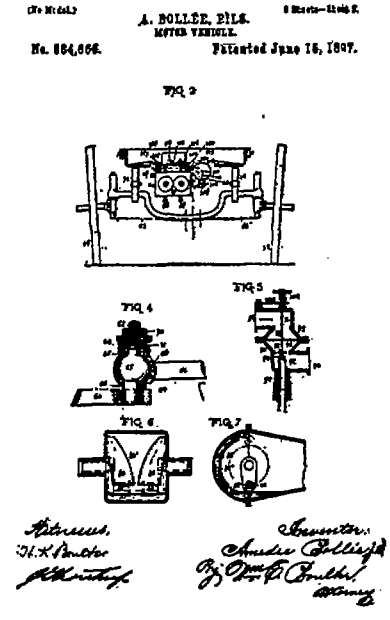
A. BOLLEE, FILS.
MOTOR VEHICLE.
No. 584,006.
Patented June 15, 1897.
FIG. 2
FIG. 4
FIG. 5
FIG. 6
FIG. 7
Witnesses.
Inventor.
Attorney

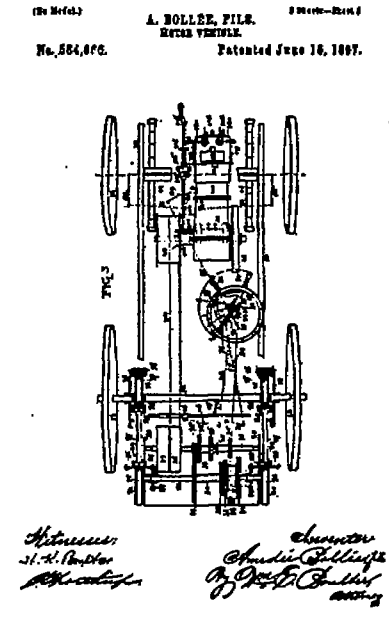
A. BOLLEE, FILS.
MOTOR VEHICLE.
No. 584,006.
Patented June 15, 1897.
FIG. 3
Witnesses.
Inventor.
Attorney

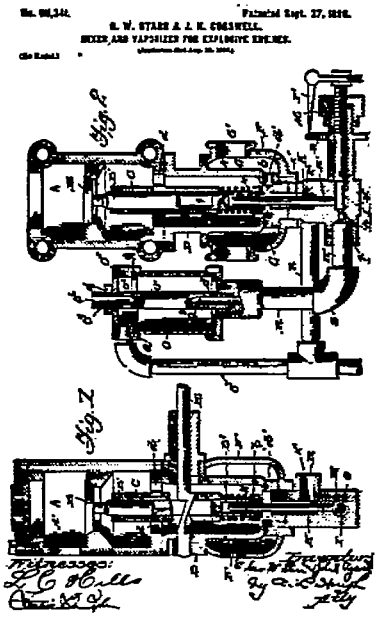
Fig. 2
Fig. 1

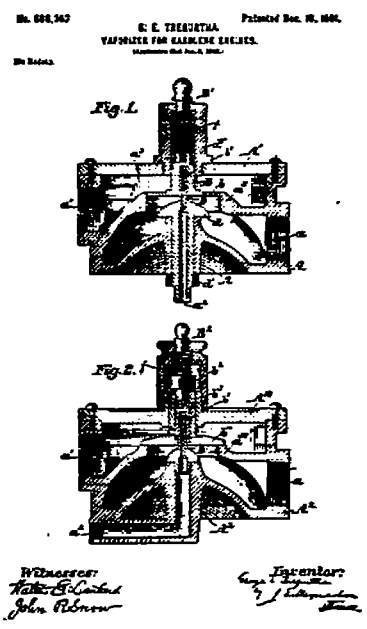
Fig. 1
Fig. 2

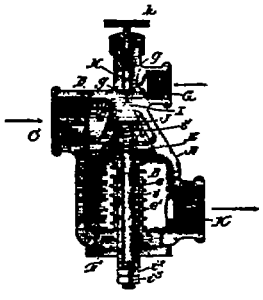

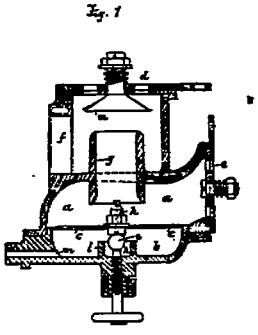
Fig. 1

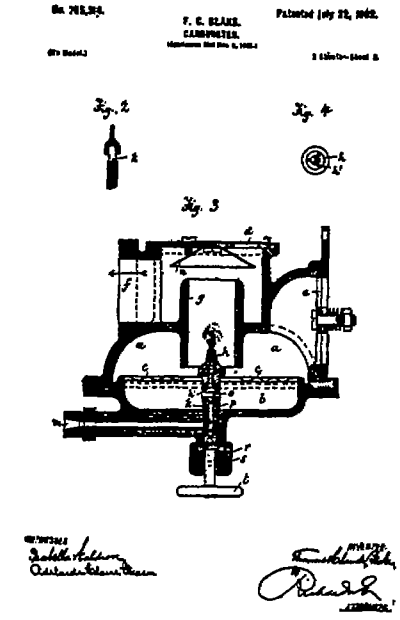
F. C. BLAKE.
CARBURETER.
Patented July 22, 1902.
Fig. 2
Fig. 4
Fig. 3

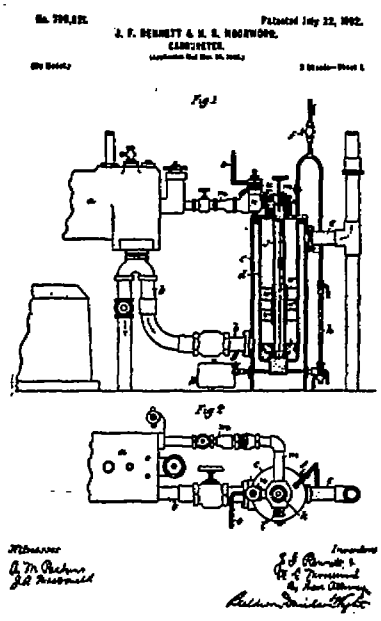
Patented July 22, 1902.
J. F. BENNETT & H. S. HOGEWOOD.
CARBURETER.
Fig 1
Fig 2

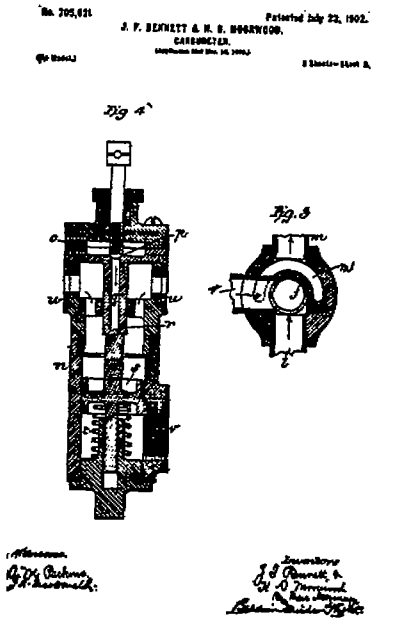
Patented July 22, 1902.
J. F. BENNETT & H. S. HOGEWOOD.
CARBURETER.
Fig 4
Fig. 3

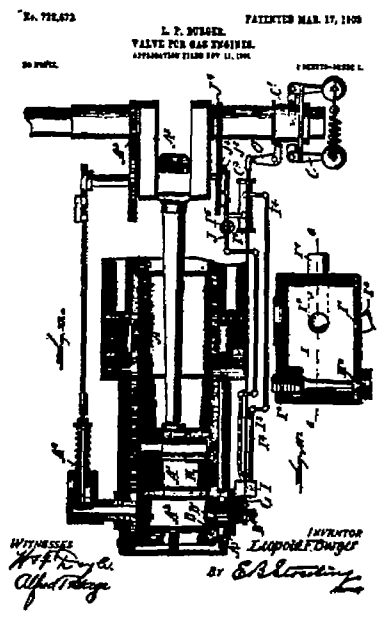
PATENTED MAR. 17, 1903
L. P. DURGER.
VALVE FOR GAS ENGINES.
INVENTOR
WITNESSES

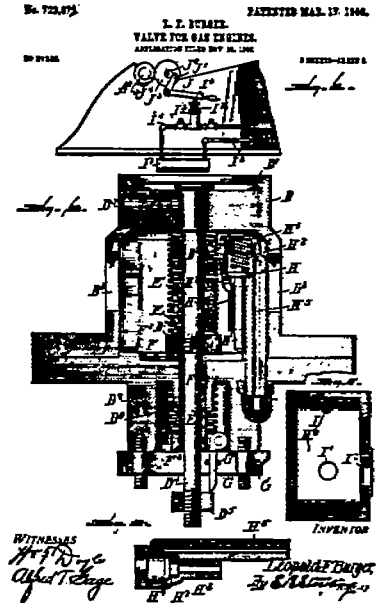
PATENTED MAR. 17, 1903.
VALVE FOR GAS ENGINES.
INVENTOR
WITNESSES

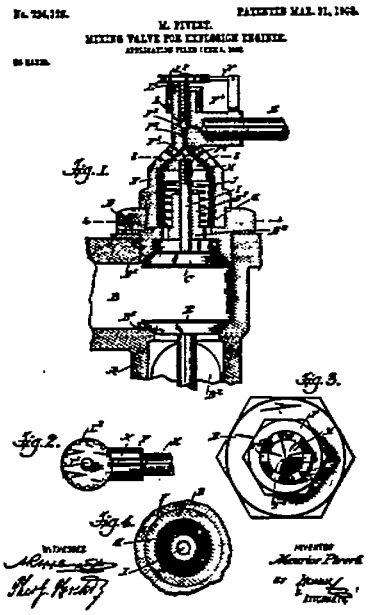
PATENTED MAR. 31, 1903.
M. PIVERT.
MIXING VALVE FOR EXPLOSION ENGINE.
Fig. 1.
Fig. 2.
Fig. 3.
Fig. 4.

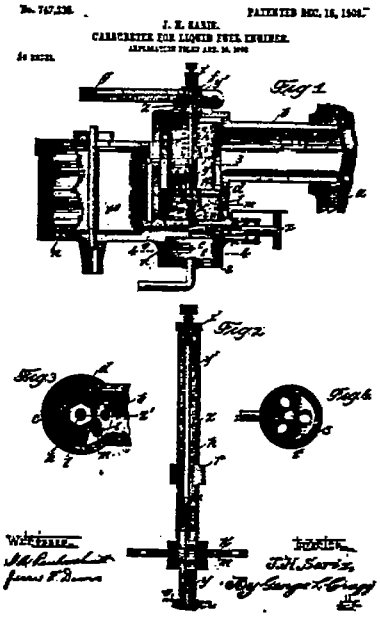
PATENTED DEC. 16, 1902.
J. E. HAHN.
CARBURETER FOR LIQUID FUEL ENGINES.
Fig. 1.
Fig. 2.
Fig. 3.
Fig. 4.

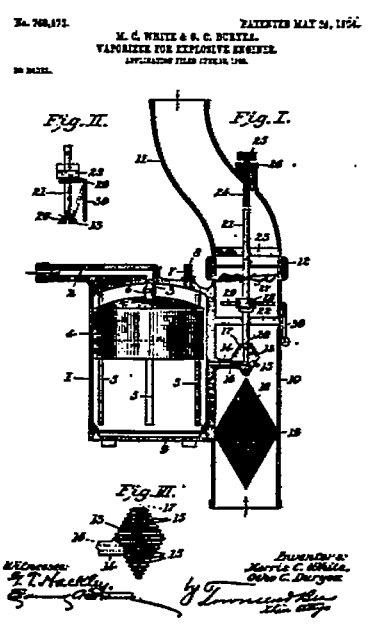
PATENTED MAY 24, 1904.
M. C. WHITE & G. C. DURYEA.
VAPORIZER FOR EXPLOSIVE ENGINES.
Fig. II.
Fig. I.
Fig. III.

The use of a fan type of air motor as an air impact device to lift the fuel valve is illustrated on page 179 (760,673, May 24, 1904, White & Duryea), the fan or motor also serving as a mixer. Adjustment of proportions in those cases so far illustrated has been provided by a needle valve before the fuel inlet valve or by limiting the lift of the inlet valve, but the same result may be obtained by adjusting the air as shown on page 181. (761,392, May 31, 1904, Olds.) Here the use of pressure supply of fuel is clearly indicated by the tank level, and the air inlet is provided with an area adjusting slide to control the amount of air that shall enter each stroke with the fixed amount of fuel. The same idea of control by the air, but by an interesting form of air damper, the iris, is shown on page 181. (793,498, June 27, 1905, Ash.)

Direct vacuum actuation of the fuel valve, independent of the air flow except as it may be the cause of the vacuum, is shown on page 181 (820,408, May 15, 1906, Garllus), where the vacuum acting on one side of the disk and atmosphere on the other, lifts it and the fuel valve. A pivoted or swing type of air-flow disk to actuate the fuel valve is shown on page 181 (850,223, Apr. 16, 1907, Hallett), a form that should be very sensitive to air movements and sure to open fully each time. A form in which the check valve that actuates the fuel valve does so by an indirect connection is shown on page 182 (999,033, July 25, 1911, Hubbard), where a lever permits relative lifts about in proportion to the two valve diameters, which is not possible with direct axial connection, except by making the period of opening of the air valve greater than that of the fuel valve. A ball used as the fuel valve and lifted by the vacuum directly is shown on page 182 (1,004,091, Sept. 26, 1911, Shain), and a similar use of direct vacuum on a flat-faced valve is shown on page 182 (1,120,397, Dec. 8, 1914, Martin). An interesting case of indirect fuel introduction is shown on page 182 (1,044,314, Nov. 12, 1912, Watson), where the fuel is discharged into a side pocket with an air passage by passing the spring-loaded inlet valve. This passage would tend to lift the fuel promptly above that valve, better than if it were delivered to a low-velocity main air stream, especially if the check valve is heavily loaded. That this old and simple class of device is still a subject of invention is illustrated by the case on page 183 (1,151,156, Aug. 24, 1915, Bingaman), where a simple air-flow disk causes a fuel valve to lift in front of the air, or in this case, the mixture-inlet valve, here used as the entrance to the closed crank case of a small two-cycle engine.

Subclass 1.1—Fuel valve operated by engine valve gear.—Probably the oldest of the class of fuel valves directly operated from the valve gear, independent of the air or mixture valves, and under the control of a hit-and-miss governor, is that on page 184 (433,806, Aug. 5, 1890, Otto), which case is of peculiar interest, in view of the pioneer work of this now famous inventor, Otto, a contemporary and rival of the equally famous Körting. One other case will serve to illustrate this subclass as it is of such limited value in its bearing on the general problem, that on pages 184 and 185 (574,183, Dec. 29, 1896, Underwood), where by the one cam-actuated arm, the main inlet valve is lifted, and at the time a gas, and a gasoline fuel valve as well.

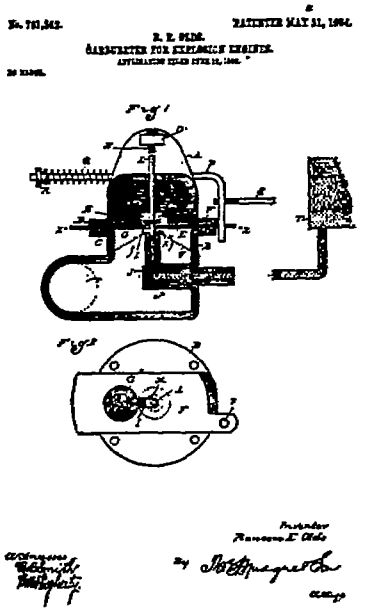
No. 701,342.
PATENTED MAY 31, 1902.
R. E. OLDS.
CARBURETER FOR EXPLOSIVE ENGINES.
Fig. 1
Fig. 2
Inventor
Ransom E. Olds
Witnesses

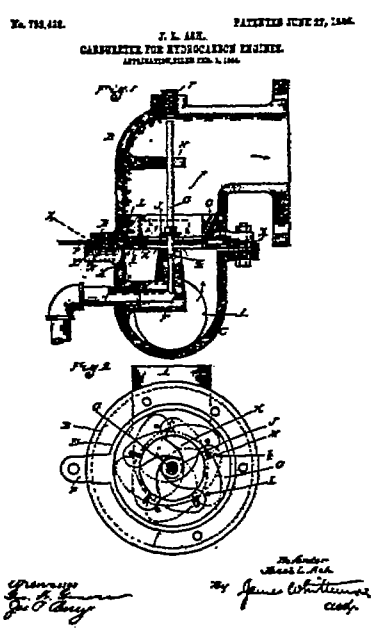
No. 702,432.
PATENTED JUNE 27, 1902.
J. L. ARE.
CARBURETER FOR HYDROCARBON ENGINES.
Fig. 1
Fig. 2
Inventor
Witnesses

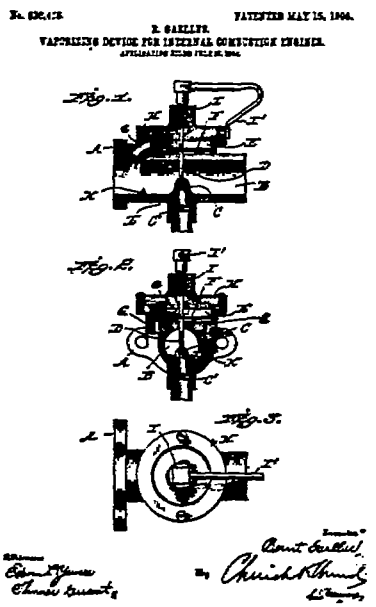
PATENTED MAY 15, 1906.
R. GAILLIE.
VAPORIZING DEVICE FOR INTERNAL COMBUSTION ENGINES.
Fig. 1.
Fig. 2.
Fig. 3.
Inventor
Witnesses

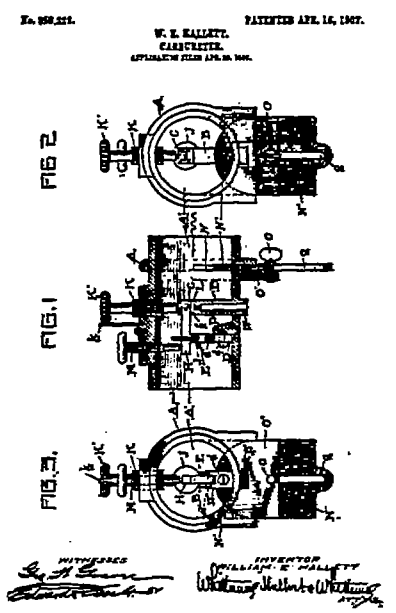
PATENTED APR. 16, 1907.
W. E. HALLETT.
CARBURETER.
FIG 2
FIG. 1
FIG. 3.
WITNESSES
INVENTOR
WILLIAM E. HALLETT

E. HUBBARD.

999,083. Patented July 26, 1911.

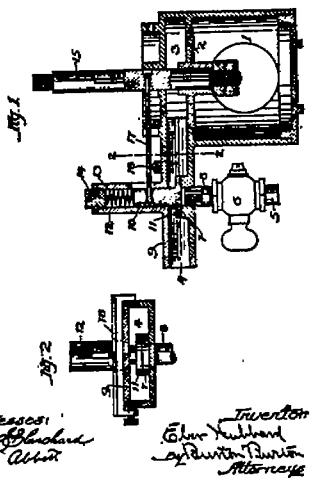

C. D. SMITH.

1,004,091. Patented Sept. 26, 1911.

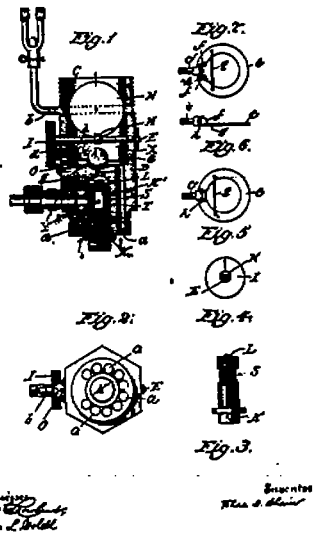

T. A. MARTIN.

1,190,397. Patented Dec. 5, 1914.

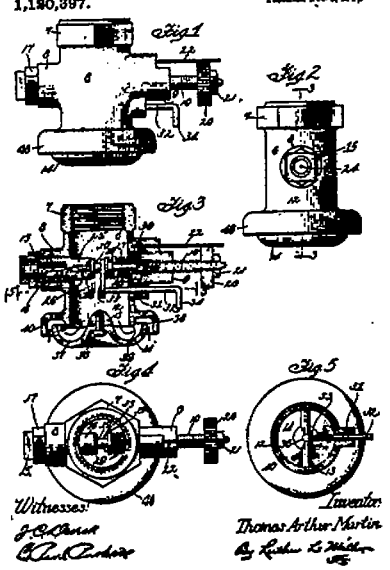

F. C. WATSON.

1,044,814. Patented Nov. 12, 1912.

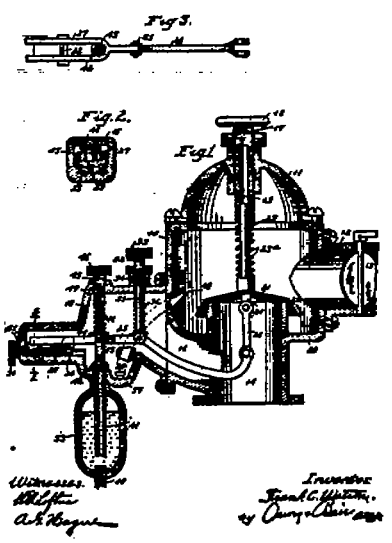

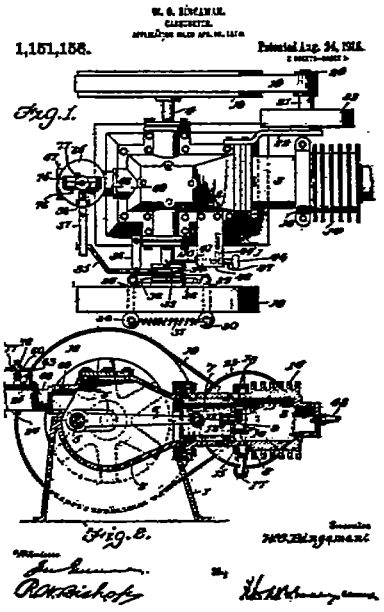
1,151,158.
Fig. 1.
Fig. 2.

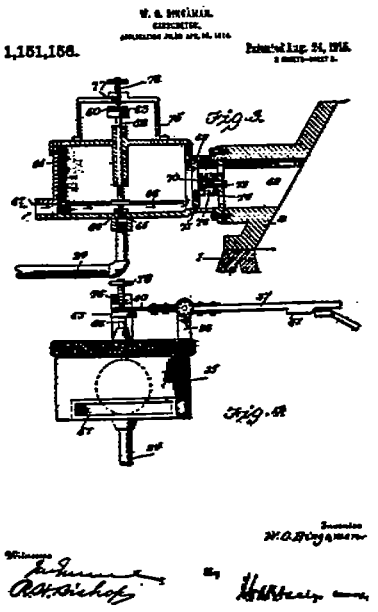
1,151,158.
Fig. 3.
Fig. 4.

(No Model.) 3 Sheets—Sheet 2.

N. A. OTTO.

MOTOR ENGINE WORKED BY OIL VAPOR.

No. 433,806. Patented Aug. 5, 1890.

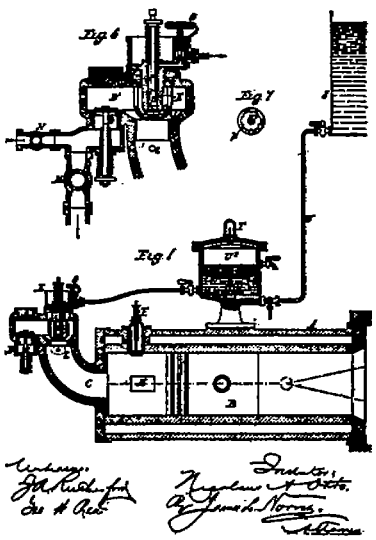

(No Model.) 3 Sheets—Sheet 3.

N. A. OTTO.

MOTOR ENGINE WORKED BY OIL VAPOR.

No. 433,806. Patented Aug. 5, 1890.

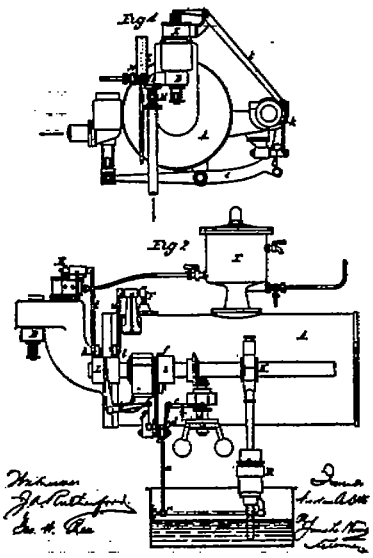

(No Model.) 3 Sheets—Sheet 2.

N. A. OTTO.

MOTOR ENGINE WORKED BY OIL VAPOR.

No. 433,806. Patented Aug. 5, 1890.

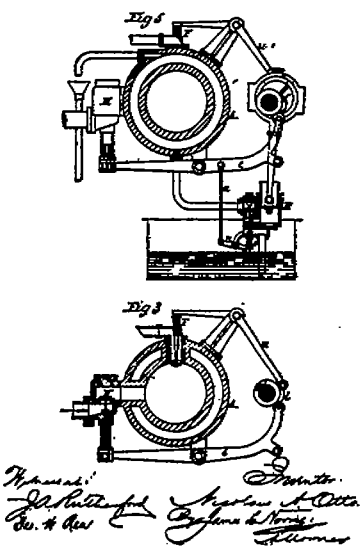

(No Model.) 8 Sheets—Sheet 1.

F. M. UNDERWOOD.

MIXER FOR GAS ENGINES.

No. 574,183. Patented Dec. 29, 1896.

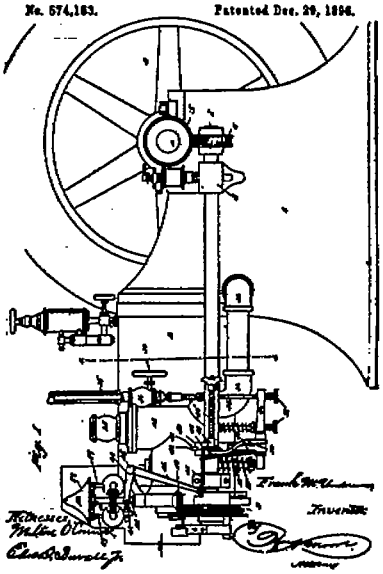

(No Model.) 3 Sheets—Sheet 1.

F. M. UNDERWOOD.

MIXER FOR GAS ENGINES.

No. 574,183. Patented Dec. 29, 1896.

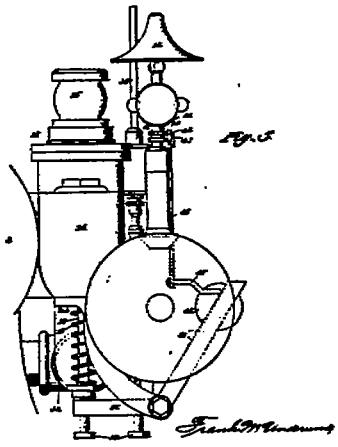

Witnesses
Milton O'Connell
Edwd. D. Duvall Jr.

Inventor
F. M. Underwood
By Dyrenforth
Atty.

(No Model.) 3 Sheets—Sheet 2.

F. M. UNDERWOOD.

MIXER FOR GAS ENGINES.

No. 574,183. Patented Dec. 29, 1896.

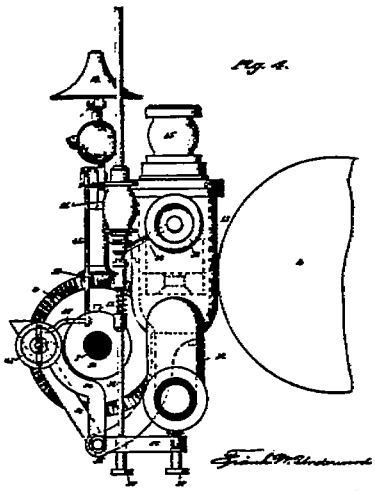

Witnesses
Milton O'Connell
Edwd. D. Duvall Jr.

Inventor
F. M. Underwood
By Dyrenforth
Atty.

(No Model.) 3 Sheets—Sheet 3.

F. M. UNDERWOOD.

MIXER FOR GAS ENGINES.

No. 574,183. Patented Dec. 29, 1896.

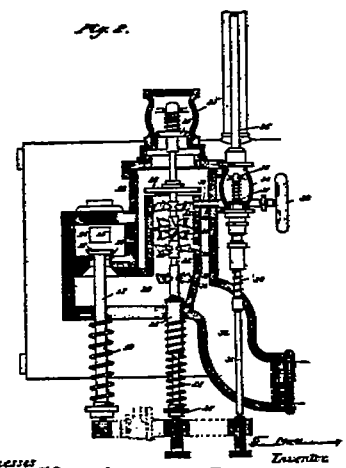

Witnesses
Milton O'Connell
Edwd. D. Duvall Jr.

Inventor
F. M. Underwood
By Dyrenforth
Atty.

(No Model.) 3 Sheets—Sheet 3.

F. M. UNDERWOOD.

MIXER FOR GAS ENGINES.

No. 574,183. Patented Dec. 29, 1896.

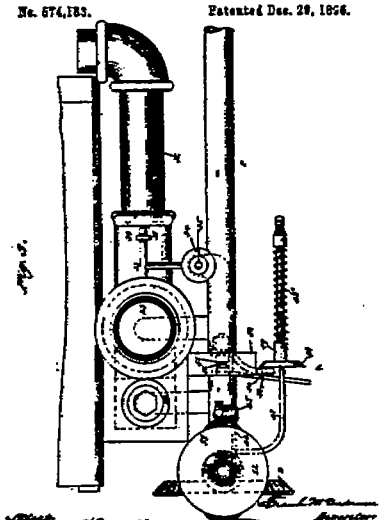

Witnesses
Milton O'Connell
Edwd. D. Duvall Jr.

Inventor
F. M. Underwood
By Dyrenforth
Atty.

Subclass 1.2—Fuel inlet in seat of automatic air inlet valve.—The idea of this arrangement in this class is to insure an adequate air velocity past the fuel inlet when it opens to carry the fuel and prevent it dropping back, but there may be some difficulty in making a broad seat of a conical air check valve close tightly an appropriately small fuel inlet, and even as much so with flat seats. The earliest case of this subclass, perhaps also the earliest of the whole general class, and one that attained commercial success is that on page 189 (417,924, Dec. 24, 1889, Körting), in which the descent of the piston opens the air and fuel valves together, the fuel discharging into the seat of the air valve for vigorous spraying. This inventor, Körting, with Otto, may be said to have inaugurated the commercially successful business of building gasoline engines in their two rival German establishments, still in existence and still successful. Association with a fuel inlet located in the seat of the air valve, of a heated chamber, to permit the same proportioning structure to operate on a heavy or nonvolatile fuel, and thus to convert a gasoline into an oil engine, to use common terms, is illustrated on page 189. (523,511, July 24, 1894, Campbell.) Here the fuel and air descend together and strike a hot elbow where the oil separates out, becomes heated, and being swept by the air, is vaporized. This case may be said to have practically inaugurated the construction of that class of oil engine in which the mixture is made externally to, and not in the cylinder, by first proportioning fuel and air, and then heating the mixture on its way to the cylinder. Another early form of this arrangement is shown on page 189 (635,166, Oct. 17, 1899, Hay), which also provides exhaust heat for the fuel and mixture entrance chamber. A complete ring of fuel inlet holes is shown in the form on page 190. (690,112, Dec. 31, 1901, Kull.) Manual adjustment of the fuel needle valve simultaneously with the lift limit of the air check valve, is provided on page 190 (722,357, Mar. 10, 1903, Davis), which, if connected to an outlet throttle, would become a pair of graduating valves of quite different characteristics. A flat seat air check valve is shown on pages 190 and 191 (894,656, July 28, 1908, Johnston), with an odd sort of mixer, and a plug form of throttle. An annular form with the fuel valve in the center of piston type of air check is illustrated on page 191. (922, May 18, 1909, Wright.) The fuel is admitted through the interior of a hollow air check with a hollow stem on page 191. (948,977, Feb. 8, 1910, Kingsbury.) A case of flat seat annular air check valve is shown on page 192 (995,919, June 20, 1911, Smith), in connection with a fuel float chamber, where the fuel inlet is a type of device originally designed and normally used for pressure supplies of fuel.

A gravity swing check with a fuel inlet in its stem is illusted on page 192 (1,048,518, Dec. 31, 1912, Fritz), intended to be used with aspirating fuel flow as a separate idling jet to be attached to any form of carburetor and to come into action when the throttle is closed. This is an excellent illustration of the way in which old forms of devices or appliances may find new uses or be revived in new combinations. Three separate fuel inlets in the air check-valve seat, one for gasoline, one for kerosene, and a third for water, are illustrated

on pages 192 and 193 (1,156,836, Oct. 12, 1915, Diener), in connection with an exhaust heated vaporizer, for an engine to be started on gasoline, and when heated operated on kerosene, the water being added to control preignitions.

Subclass 1.3—Fuel inlet located beyond automatic air inlet.—One early case (500,401, June 27, 1893, Lehman), shown on page 194, attaches the fuel valve to a spring-closed poppet air-inlet valve by a yoke with a flexible element, the fuel inlet being located so that it is acted upon by the vacuum which opens the air valve, so the fuel valve must be affected correspondingly. This is in contrast to the last subclass where the air velocity over its valve seat, and not the vacuum beyond the seat, acts on the fuel inlet. The form shown on page 194 (515,059, Feb. 20, 1894, Hoyt) illustrates the use of a slide valve for the fuel, actuated by the automatic air valve. The location of the tank clearly indicates a pressure fuel supply. A swing air check that strikes a separate spring-closed fuel valve is shown on page 194 (567,253, Sept. 8, 1896, Pratt), and another swing check striking a gravity and pressure closed fuel valve on page 195 (609,557, Aug. 23, 1898, Phelps). That the point of mixture of fuel and air may be controlled independently of the valve locations is illustrated on page 195 (616,974, Jan. 3, 1899, Riotte), where, although the fuel valve is formed on the end of the air-valve stem, the fuel meets the air at a distant point, emerging in four streams at a contraction to promote mixing. An independent fuel check acted on by the vacuum developed beyond the automatic air valve is shown on page 195 (617,743, Apr. 9, 1901, White) in connection with a constant-level chamber having an outlet below the level but sealed by a ball. Another case of a heater associated with proportioning fuel and air inlets is that on pages 195 and 196 (619,776, Feb. 21, 1899, Murray), in which the air valve by a long extension of its stem opens a distant oil valve, oil and air entering a heated annular pot at separate points, with the idea of promoting vaporization of the oil and mixing of its vapor with the air after the proportions have been established by the same means commonly used for gasoline and air. Another independent fuel check valve of swing type similarly located with reference to the air check but above the level in an overflow chamber, so the fuel is aspirated, is shown on page 196 (694,708, Mar. 4, 1902, White). A lever connection between the automatic air valve and a fuel valve located beyond it is shown on page 196 (1,066,080, July 1, 1913, Cole) with a hand-adjusted needle valve. This is particularly interesting because of its general similarity to another later class. If the fuel valve were given a longer taper and the air valve were situated in a long tapered seat the flow areas of the two could easily be kept in any desired ratio and proportionality be established with but little vacuum change. Such cases are fairly numerous in the later classes where the fuel is provided with a graduating valve controlled by an automatic air valve, main or secondary.

Subclass 1.4, double air inlet, one air inlet by-passes fuel inlet.—This class is the forerunner of the very large class of primary and secondary air inlets with its various combinations of valves and interconnections. Apparently the idea, at least at first, was that of

spraying and mixing rather than that of a compensating arrangement to correct for the tendency to become excessively rich in fixed single air and fuel inlets, by admitting a secondary or diluting air stream. In a patent granted for a "self-propelling carriage," a fuel valve actuated by an air valve, makes what may be termed a primary mixture, to which additional or secondary air may be admitted for a manual adjustment of proportions, as shown on page 197. (610,460, Sept. 6, 1898, Pretot.) One early form, that on page 197 (679,387, July 30, 1901, Mathieu), has a pair of air-impact disks by which the fuel valve is actuated, air from one inlet strikes the top disk and opens the fuel valve, the fuel being spread over the disk and sprayed down from its edge in front of the second air stream. This may be compared with the form on page 197 (715,398, Dec. 9, 1902, Longuemare), which is really intended to act in the compensating way, the secondary air being admitted beyond the impact hood equivalent to a disk, so that the fuel valve is lifted for a shorter period and fuel admitted less, the more the secondary air. Secondary air acts, therefore, to limit the fuel lift somewhat, but not quite as would a mechanical stop, and its effect on proportioning is similar to that of a fuel needle valve. In the form, page 198 (896,388, Aug. 18, 1908, Johnston), part of the air passes directly up the center tube, exerting a velocity action at the fuel outlet and impinging on the fuel valve lifting disk, while the rest of the air enters around the edge of the automatic inlet valve, and has no influence in lifting the fuel valve at all, but a mechanical stop to limit the lift is also used. The fuel-air ratio is directly adjustable manually by the air by-pass, or by the fuel needle, in the form page 198. (903,206, Nov. 10, 1908, Lawson.) A still closer approach to the automatic compensating action of automatic secondary air is shown on page 198 (939,856, Nov. 9, 1909, Papanti), where the secondary air enters by an automatic valve. This, by the removal of the fuel valve and attachment to a constant level cup, would become one of the very large class of so-called automatic compensating cases of subclass 8.2. Indicating that carburetors of this class are still being brought forward is the case on page 198 (1,181,514, May 2, 1916, Eynon), in which the fuel valve purpose is not clear, because the flow is purely aspirating, but the perforated box surrounding the fuel outlet is intended to assist in spraying and mixing.

Class 2, carburetors, proportioning flow, metering fuel pump, air-motor driven.—For many years before the advent of the gasoline engine and the need in connection with it of suitably small, cheap, and accurately proportioning carburetors that would not leave heavy fractions as unusable residues the art of gas making had been pretty considerably developed, and in connection with it a very large number of evaporative carburetors. Some of these had fuel-feed valves more or less relating the control of fuel flow to that of air flow, but the great majority, substantially all of them, maintained a body of liquid either in bulk or spread over solid, porous, or fibrous surfaces, from which evaporation took place, the proportions being established by the evaporative conditions rather than by the conditions of feed and flow. From this, however, has come in a more or less logical

(No Model.) E. KORTING.
METHOD OF AUTOMATIC IGNITION IN GAS ENGINES.
No. 417,924. Patented Dec. 24, 1889.

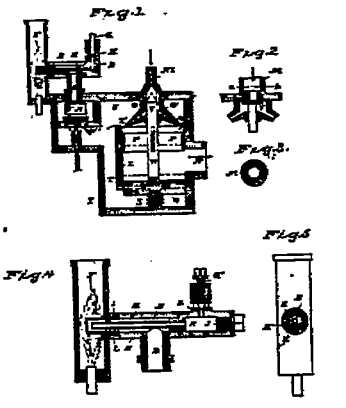

(No Model.) 2 Sheets—Sheet 1. H. CAMPBELL.
GAS ENGINE.
No. 523,511. Patented July 24, 1894.

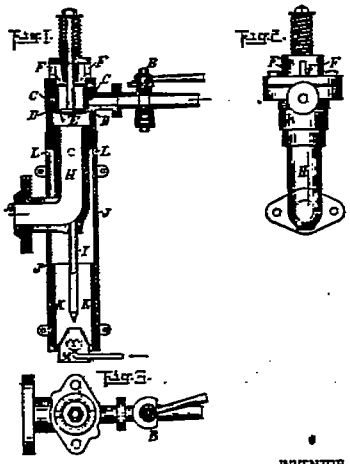

(No Model.) 2 Sheets—Sheet 2. H. CAMPBELL.
GAS ENGINE.
No. 523,511. Patented July 24, 1894.

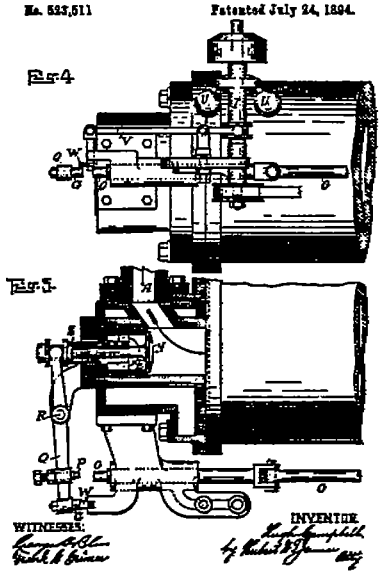

No. 535,715. Patented Sept. 17, 1895.
W. HAY.
VAPORIZER FOR GAS ENGINES.
(No Model.)

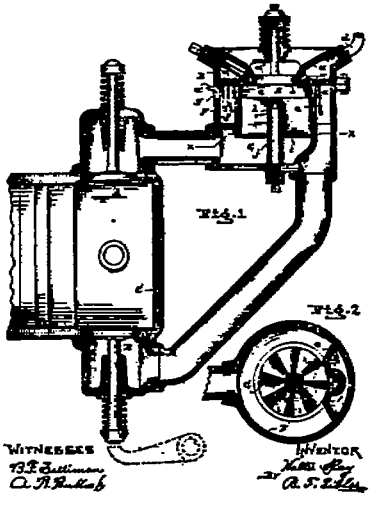

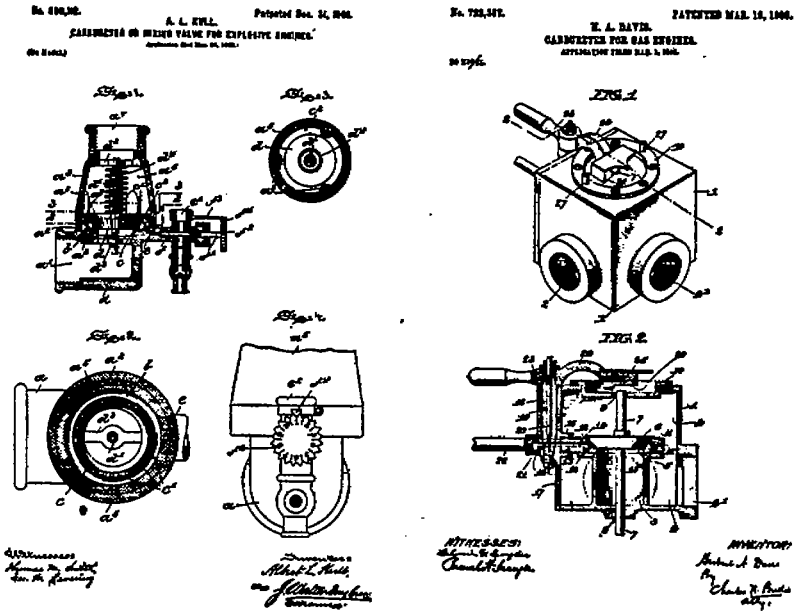
A. L. HILL.
CARBURETER OR MIXING VALVE FOR EXPLOSIVE ENGINES.
E. A. DAVIS.
CARBURETER FOR GAS ENGINES.
PATENTED MAR. 10, 1903.
FIG. 1
FIG. 2
WITNESSES:
INVENTOR:

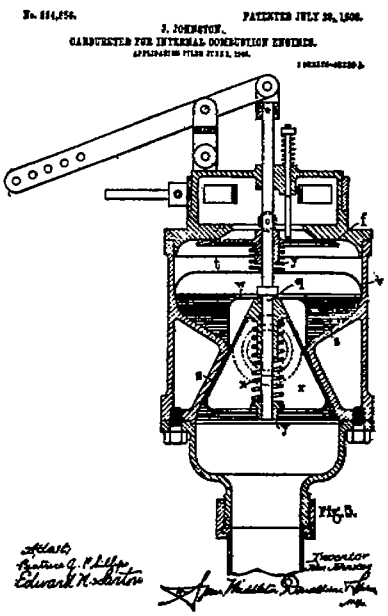
PATENTED JULY 30, 1901.
J. JOHNSTON.
CARBURETER FOR INTERNAL COMBUSTION ENGINES.
FIG. 3.
Inventor

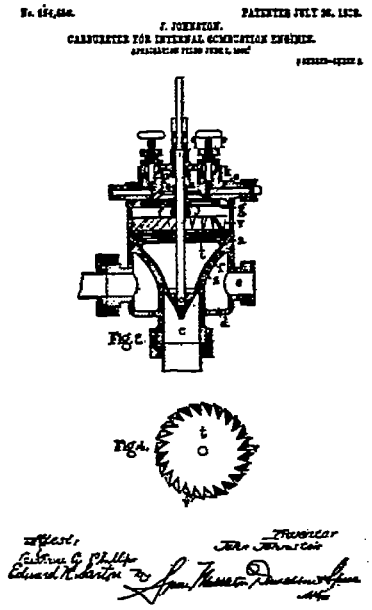
J. JOHNSTON.
CARBURETER FOR INTERNAL COMBUSTION ENGINES.
Fig. 1.
Fig. 4.

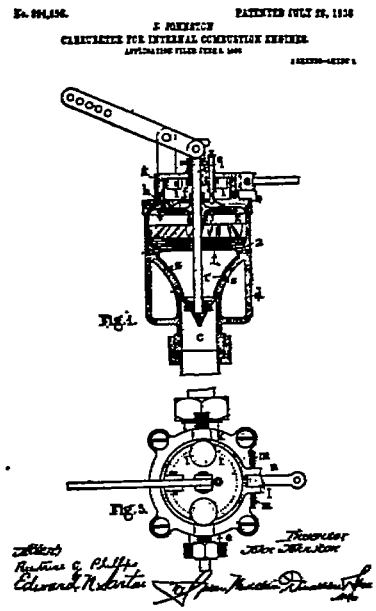
J. JOHNSTON.
CARBURETER FOR INTERNAL COMBUSTION ENGINES.
Fig. 1.
Fig. 3.

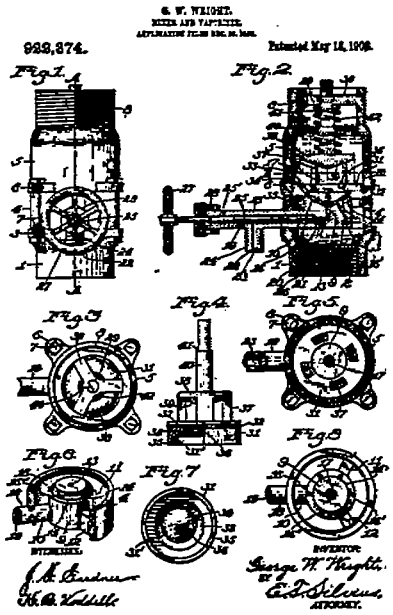
G. W. WRIGHT.
MIXER AND VAPORIZER.
923,374.
Patented May 18, 1909.
Fig. 1.
Fig. 2.
Fig. 3
Fig. 4.
Fig. 5.
Fig. 6.
Fig. 7
Fig. 8
INVENTOR
George W. Wright.
ATTORNEY.

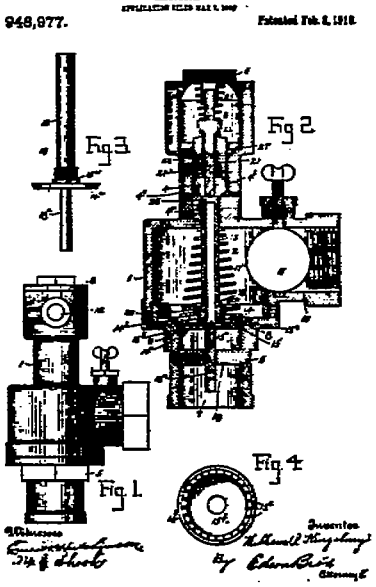
W. E. KINGSBURY.
CARBURETER.
948,977.
Patented Feb. 8, 1910.
Fig 3
Fig 2
Fig 1.
Fig 4
Witnesses
Inventor

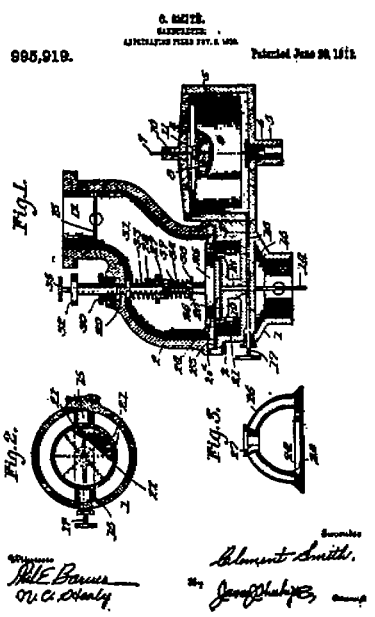
G. SMITH.
CARBURETOR.
995,919.
Patented June 20, 1911.
Fig. 1.
Fig. 2.
Fig. 3.

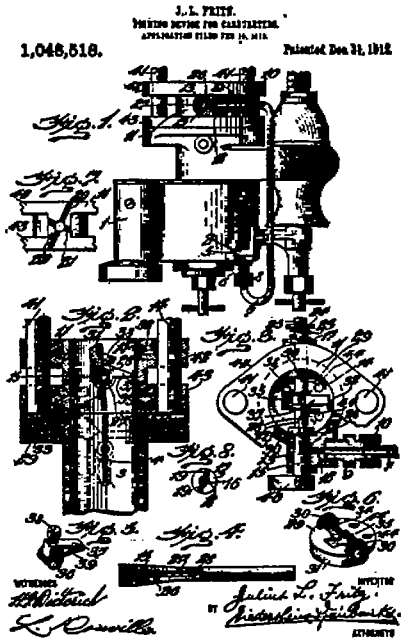
J. L. FRITZ.
1,046,516.
Patented Dec. 31, 1912.
Fig. 1.
Fig. 2.
Fig. 3.
Fig. 4.
Fig. 5.
Fig. 6.
Fig. 7.
Fig. 8.

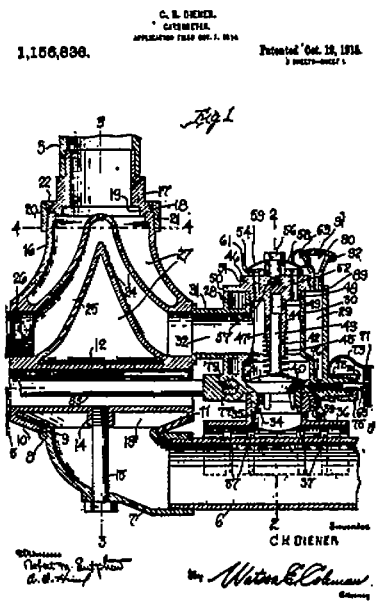
C. H. DIENER.
CARBURETOR.
1,156,836.
Patented Oct. 12, 1915.
Fig. 1
C. H. DIENER

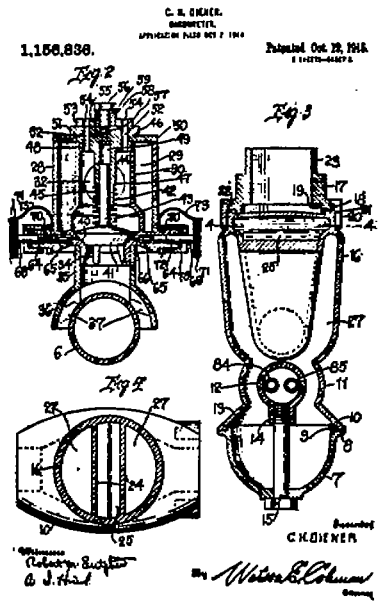
C. H. DIENER.
CARBURETOR.
1,156,836.
Patented Oct. 12, 1915.
Fig. 2
Fig. 3
Fig. 4
C. H. DIENER

C. H. DIENER.
CARBURETER.
APPLICATION FILED OCT 7 1914

1,156,836. Patented Oct. 12, 1915.
2 SHEETS—SHEET 2

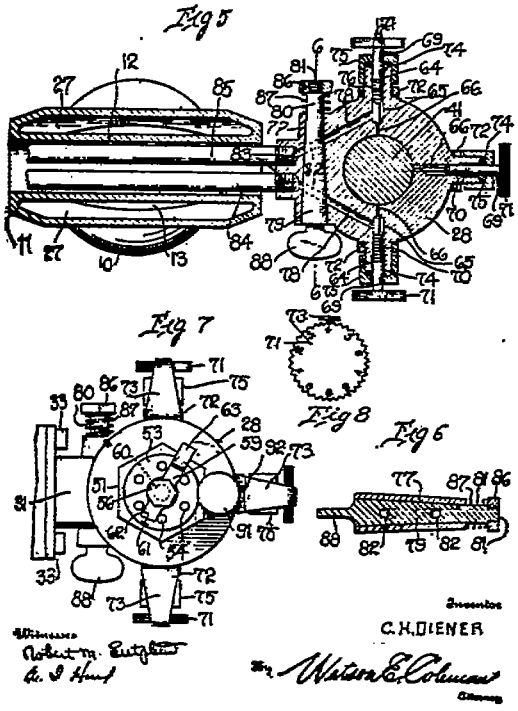

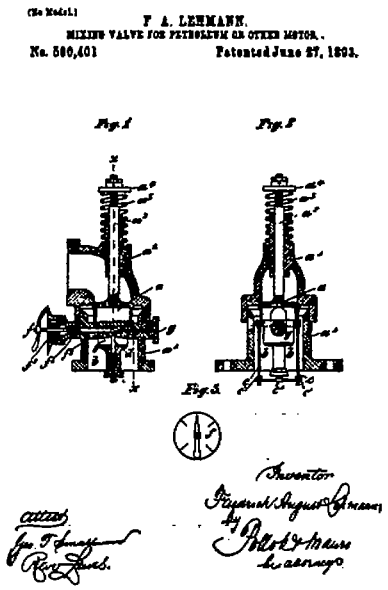
(No Model.)
F. A. LEHMANN.
MIXING VALVE FOR PETROLEUM OR OTHER MOTOR.
No. 500,401
Patented June 27, 1893.
Fig. 1
Fig. 2
Fig. 3
Inventor
Witnesses

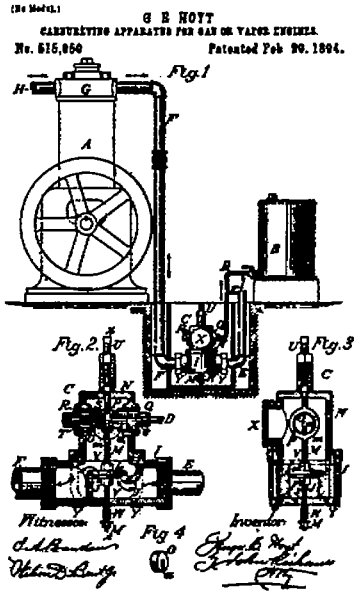
(No Model.)
G. E. HOYT
CARBURETING APPARATUS FOR GAS OR VAPOR ENGINES.
No. 515,050
Patented Feb. 20, 1894.
Fig. 1
Fig. 2
Fig. 3
Fig. 4
Witnesses
Inventor

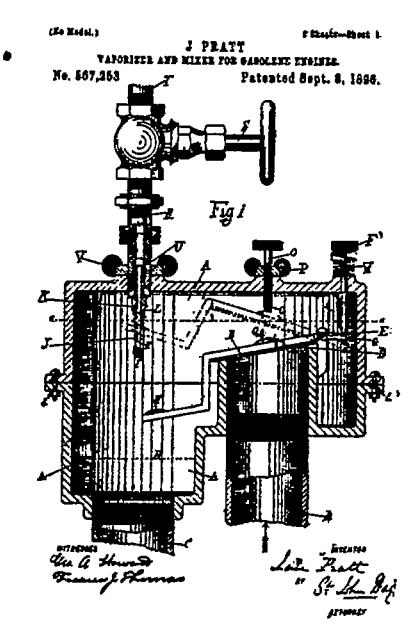
(No Model.)
J. PRATT
VAPORIZER AND MIXER FOR GASOLENE ENGINES.
No. 567,253
Patented Sept. 8, 1896.
Fig 1
Witnesses
Inventor
Attorney

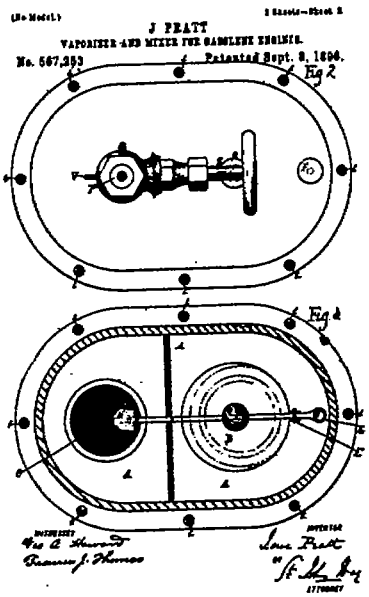
(No Model.)
J. PRATT
VAPORIZER AND MIXER FOR GASOLENE ENGINES.
No. 567,253
Patented Sept. 8, 1896.
Fig 2
Fig 3
Witnesses
Inventor
Attorney

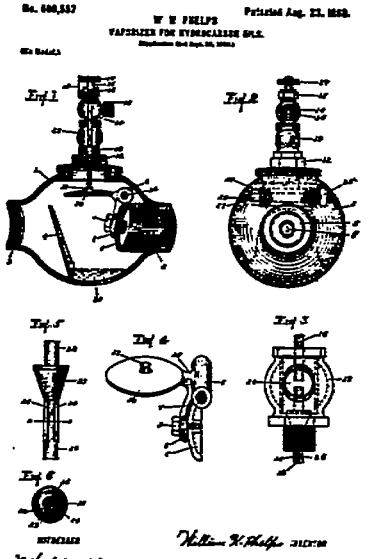
W. H. PHELPS
VAPORIZER FOR HYDROCARBON GAS.
Fig. 1
Fig. 2
Fig. 3
Fig. 4
Fig. 5
Fig. 6
Witnesses
Inventor

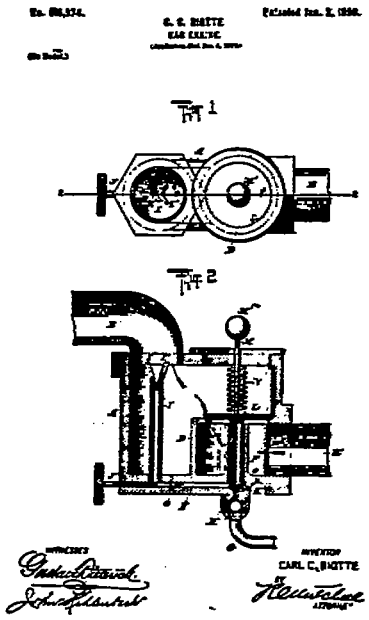
G. C. BRITTE
GAS ENGINE
Fig. 1
Fig. 2
Witnesses
Inventor
CARL C. BRITTE

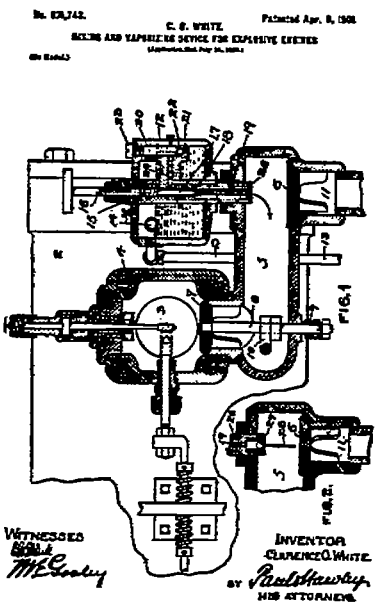
C. G. WHITE
SCUM AND VAPORIZING DEVICE FOR EXPLOSIVE ENGINES
FIG. 1
FIG. 2
Witnesses
Inventor
CLARENCE G. WHITE
BY Paul Hawley
HIS ATTORNEYS

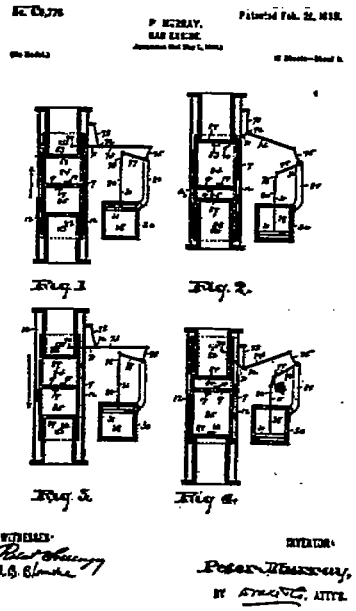
P. MURRAY.
GAS ENGINE
Fig. 1
Fig. 2
Fig. 3
Fig. 4
Witnesses
Inventor
BY ATTY.

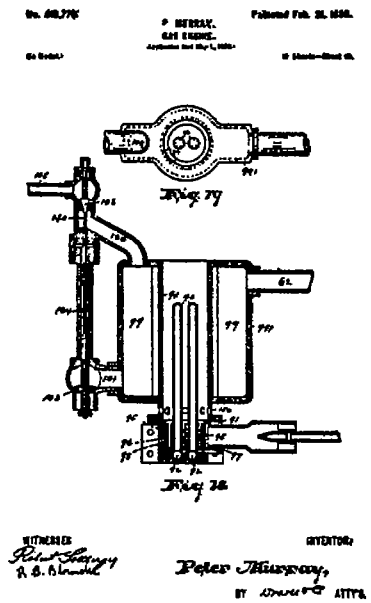
Fig. 27
Fig. 28
Peter Murray,
BY ATTY.

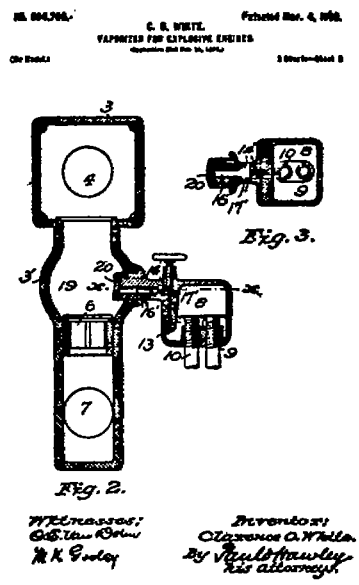
Fig. 3.
Fig. 2.
Witnesses:
Inventor:
Clarence O. White.
By Attorney.

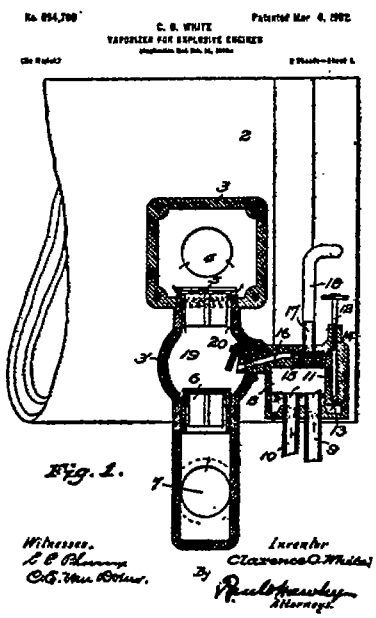
Fig. 1.
Witnesses.
Inventor
Clarence O. White
By
Attorney.

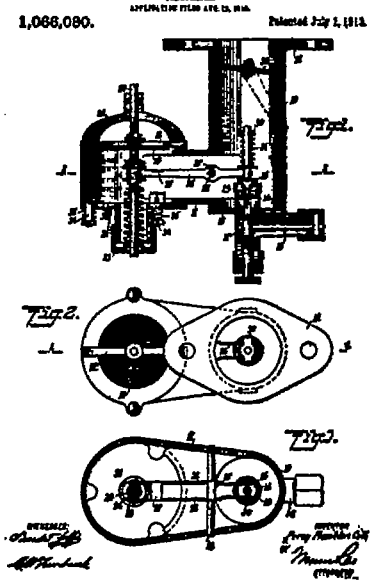
1,066,080.
Fig. 1.
Fig. 2.
Fig. 3.

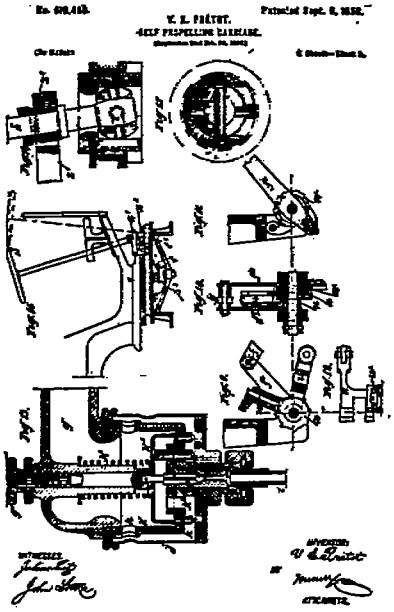

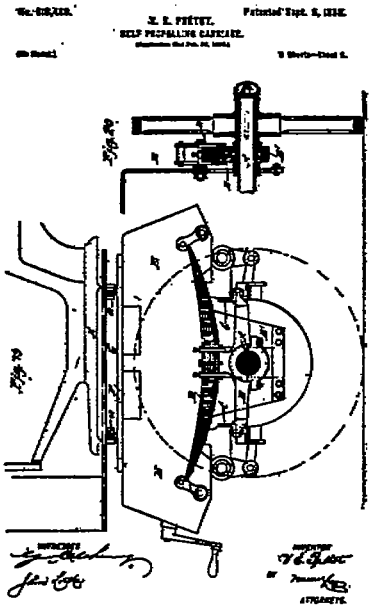

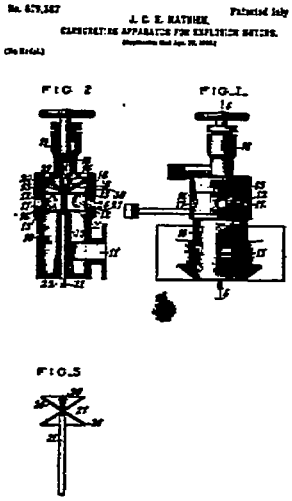
FIG. 2
FIG. 1
FIG. 3

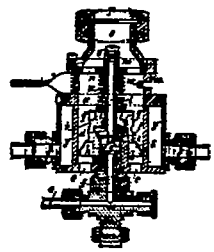

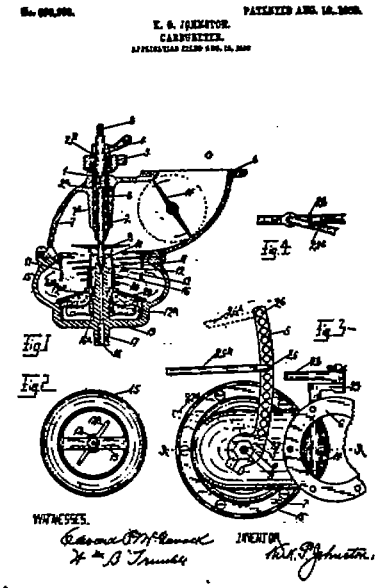
E. G. JOHNSTON.
CARBURETER.
Fig. 1
Fig. 2
Fig. 3
Fig. 4
WITNESSES.
INVENTOR.

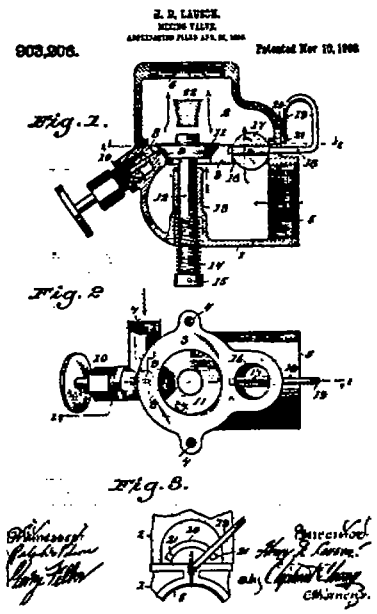
E. D. LAUSCH.
MIXING VALVE.
903,906.
Patented Nov. 10, 1908.
Fig. 1.
Fig. 2
Fig. 3.

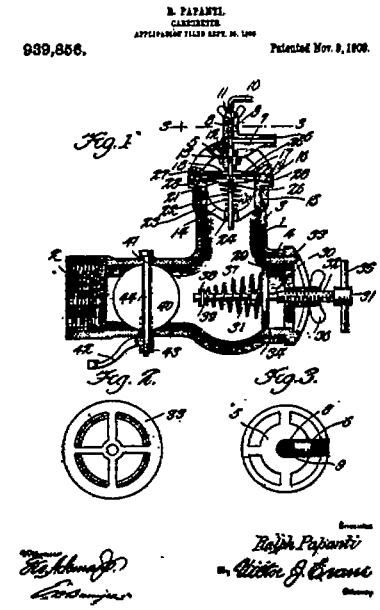
R. PAPANTI.
CARBURETER.
939,856.
Patented Nov. 9, 1909.
Fig. 1
Fig. 2.
Fig. 3.
Ralph Papanti
Victor J. Evans

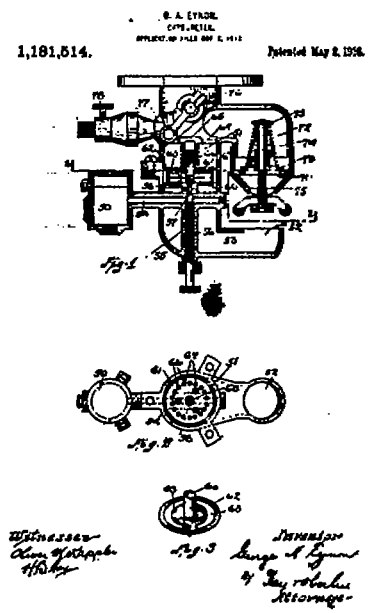
1,181,514.
Patented May 2, 1916.
Fig. 1
Fig. 2
Fig. 3

sequence the first of the proportioning-flow carburetors of the air-driven, fuel-volume meter type, shown on page 201. (249,363, Nov. 8, 1881, Jackson.) An ordinary gas meter acts as an air motor to drive a fuel meter consisting of a rotating plate with pockets on its face, the pockets filling as they pass a fuel chamber and emptying as they pass a port leading into the metered air stream. All the fuel is thus measured and proportioned to the air flowing with it as volumetrically proportioned mixture. The first case of this class designed directly for engine use where the bulk and cost of the old standard form of bellows gas meter would be prohibitive is that on page 201. (791,801, June 6, 1905, Leinau.) This has some of the characteristics of the aspirating jet type of structure. The float chamber, with its fuel passage and fuel outlet above the chamber level, are the same as would operate in the ordinary aspirating manner, except that the jet is located fairly high and in a region of low air velocity, as also is the air passage. There are added two new elements—first, a small centrifugal fuel pump in the fuel passage, and, second, an axial-flow fan-blade form of air motor in the path of the entering air, driving the pump. There is a suggestion, in view of the more or less frequent use of such fanlike motors as stirrers and mixers, that this is the primary idea here, though reliance is placed on the pump action to eject the fuel. The case is interesting rather for its suggestiveness than for its direct value, because the floow-speed pressure characteristic of the pump and air motor of these forms are not such as well maintain proportionality. Another form involving the same elements, but in which the centrifugal pump fuel passages discharge radially directly into the air instead of through a jet nozzle, as in the previous case, is shown on page 202. (957,976, May 17, 1910, Lucas.) A more directly proportioning arrangement based on volumetric displacements is that on page 202 (1,048,083, Dec. 24, 1912, Lavender), in which a rotary volume meter of the form common in the measurement of water is used as air motor and drives a pair of plunger fuel pumps. If the slip of these two displacers were exactly the same, and if there were no density variation in the air to cause variations in the weight of air, even when its volume is correctly proportioned to the fuel, this arrangement would seem to offer good prospects, at least as good as most of the direct-jet aspirators, as a proportioner. Of course there will be some unfavorable inertia lag elements to interfere with prompt acceleration of a variable-speed engine, and once it is operating at high speed the inertia of the moving parts of the proportioner will continue fuel delivery after the throttle is closed. Furthermore, the size of the apparatus must necessarily be large, as the speed of a gasoline pump can not be high, but the arrangement is truly one of the proportional-flow class.

A similar rotary meter type of air motor driving a gear form of fuel pump by friction disks to secure a suitable ratio for adjustment of proportions is shown on pages 202 and 203. (1,119,479, Dec. 1, 1914, Veeder.) There is also added a diaphragm form of fuel needle control to adjust the inlet automatically with change of speed, so as to keep the pump delivery pressure nearly constant. A late form of the centrifugal fuel pump driven by an air motor of the turbine class is shown on page 203 (1,137,238, Apr. 27, 1915, Sherman), the rotor

being mounted on ball bearings directly above the float chamber and the pump consisting primarily of a curved disk concave upward with an orifice restricted entrance. Still a different form involving an impulse form of air motor is shown on page 203 (1,149,323, Aug. 10, 1915, Baker & Swan), where an automatic intake valve of the swing-check type is employed as an air-entrance nozzle to direct the air to the motor vanes at approximately constant velocity as the intake gate varies. A gear type of fuel pump delivers the air to the throat of an air-delivery venturi tube for spraying where, of course, there will be a depression of pressure, helping to induce fuel flow. Some air at high speed by-passes the spraying tube through swing checks, tending to keep the delivery velocity through the spraying throat approximately constant.

Class 3, carburetors, proportioning flow, aspirating, single-fixed fuel and air inlets.—Nothing simpler than this structural arrangement for a proportioning flow carburetor could well be conceived, so it is quite natural to find many efforts to devise arrangements which by reason of their details or dimensions might be made to work satisfactorily enough for at least some sorts and sizes of engines. One of the early cases, page 204 (622,274, Sept. 19, 1899, Riotte), has a constant level chamber of the overflow type and a fuel passage branching beyond the needle valve to four orifices for mixing purposes, the whole chamber being doubled for direct bolting to the two intake ports of a two-cylinder stationary engine. A different form of constant-level cup of overflow type is shown on page 204 (658,267, Sept. 18, 1900, Kennedy), constructed somewhat like a plumbing trap, and still another form on page 205 (682,596, Sept. 17, 1901, Aldrich), which has in addition a plug form of fuel adjusting valve. Location of the fuel nozzle in the center of a float type of constant-level chamber to keep the fuel head constant in spite of the titling that is a necessary part of transportation service is shown on pages 205 and 206 (685,993, Nov. 5, 1901, Le Blon), in which the nozzle is axially situated in a straight portion of a cylindrical air passage, air and fuel flowing in the same direction, the air passage being provided with a manually adjusted restricted inlet. Cross flow is illustrated on page 206 (724,648, Apr. 7, 1903, Zimmermann), the fuel needle valve stem crossing a straight air passage at right angles and being carried in a cage that restricts air flow. Another such crossing fuel valve stem is shown on page 206 (729,647, May 26, 1903, White), arranged, however, in a bend, so the air passes the fuel inlet at an angle and, by reason of the obstructions, with many eddy currents. Location of a fuel heater between the fuel-measuring nozzle and the point of mixture with the air at which the fuel flow-inducing vacuum originates is illustrated on page 206. (804,589, Nov. 14, 1905, Enrico.) This fuel nozzle, of the multiple-outlet form, discharges over a series of heated tubes, where its fuel is to be vaporized in its own atmosphere. Of course the heating develops some expansion, which has a similar influence to flow resistance, and if the heat were variable there would be a variation of proportions due to it alone, independent of other influences. A curious form of fuel passage, made crooked for the purpose of resisting excessive increases of fuel flow, is shown on page 207. (846,903, Mar. 12, 1907, Bradbeer.) On page 207 (936,337, Oct. 12, 1904, Maybach) is

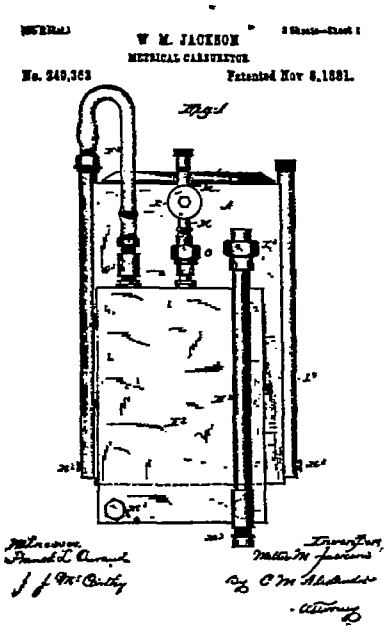
W. M. JACKSON
METRICAL CARBURETOR.
No. 249,363.
Patented Nov. 8, 1881.
Fig. 1

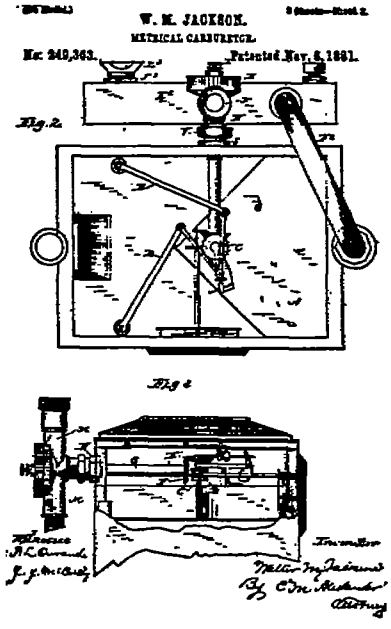
W. M. JACKSON.
METRICAL CARBURETOR.
No. 249,363.
Patented Nov. 8, 1881.
Fig. 2
Fig. 3

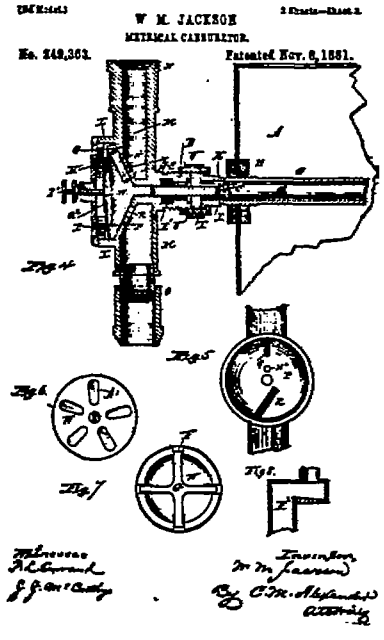
W. M. JACKSON
METRICAL CARBURETOR.
No. 249,363.
Patented Nov. 8, 1881.
Fig. 4
Fig. 5
Fig. 6
Fig. 7
Fig. 8

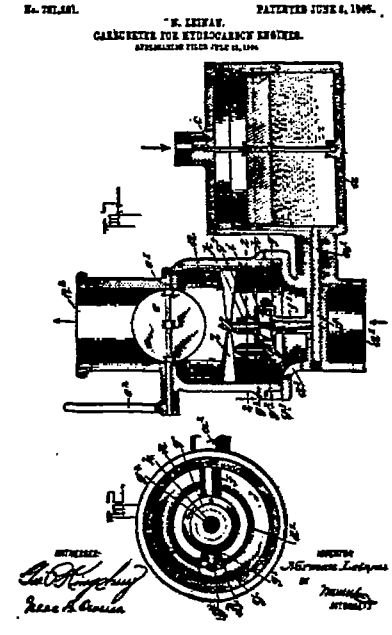
CARBURETER FOR HYDROCARBON ENGINES.

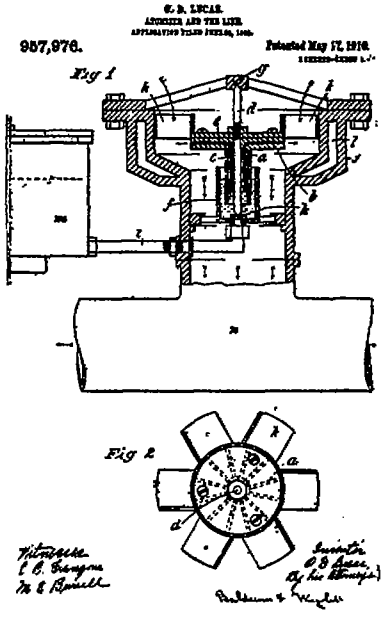
957,976.
Fig 1
Fig 2

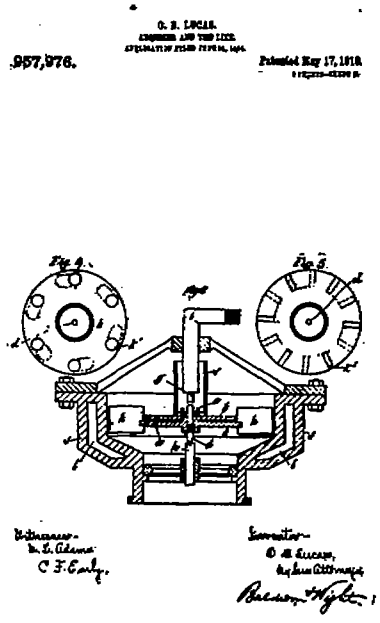
957,976.

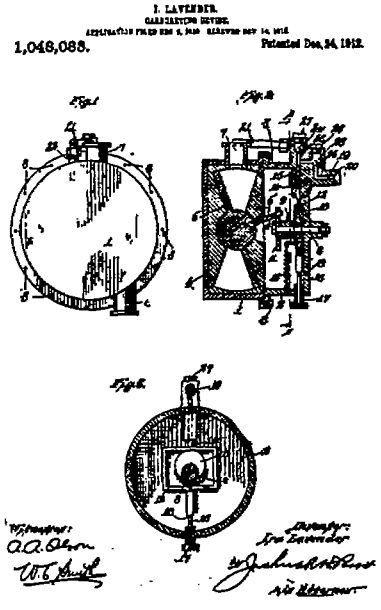
1,046,083.
Patented Dec. 24, 1912.

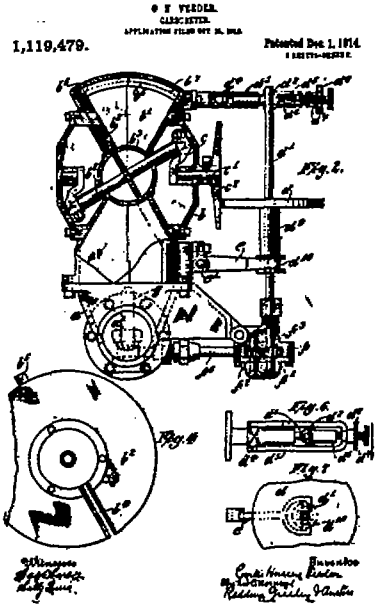
1,119,479.
Patented Dec. 1, 1914.

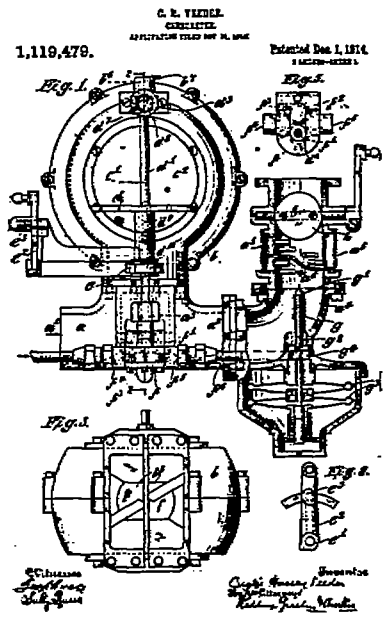
1,119,479.
Fig. 1.
Fig. 2.
Fig. 3.
Fig. 4.

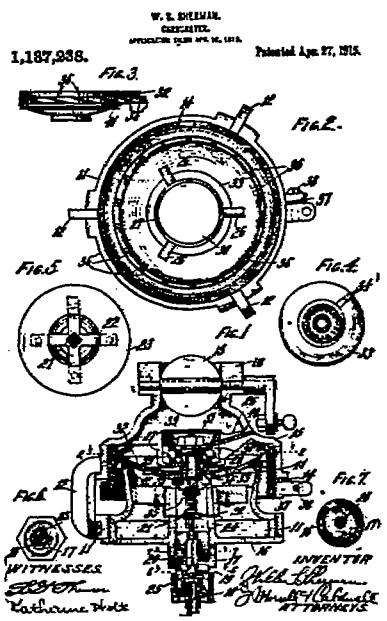
1,187,238.
Fig. 3.
Fig. 2.
Fig. 5.
Fig. 4.
Fig. 1.
Fig. 6.
Fig. 7.
WITNESSES.
INVENTOR
ATTORNEYS.

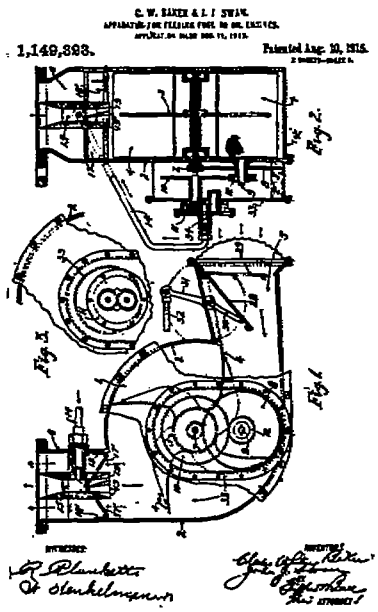
1,149,323.
Fig. 2.
Fig. 3.
Fig. 1.

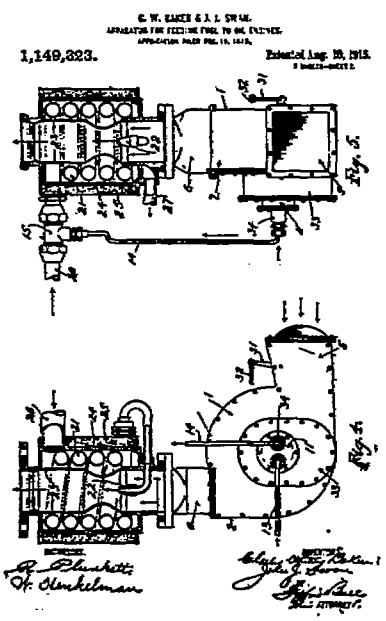
1,149,323.
Fig. 5.
Fig. 4.

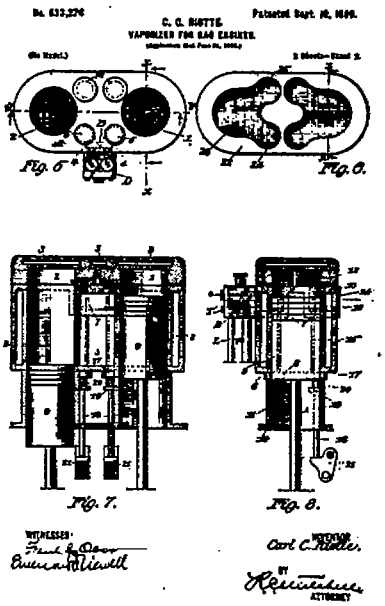
C. C. BOTTE.
VAPORIZER FOR GAS ENGINES.
Patented Sept. 18, 1900.
Fig. 5.
Fig. 6.
Fig. 7.
Fig. 8.
WITNESSES:
INVENTOR
Carl C. Botte.
BY
ATTORNEY.

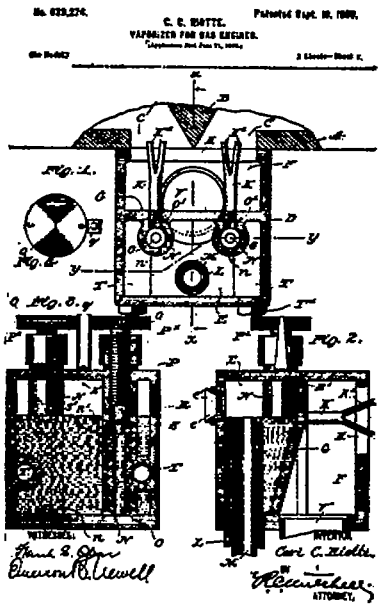
C. C. BOTTE.
VAPORIZER FOR GAS ENGINES.
Patented Sept. 18, 1900.
Fig. 1.
Fig. 2.
Fig. 3.
Fig. 4.
Fig. 5.
Fig. 2.
WITNESSES:
INVENTOR
Carl C. Botte.
BY
ATTORNEY.

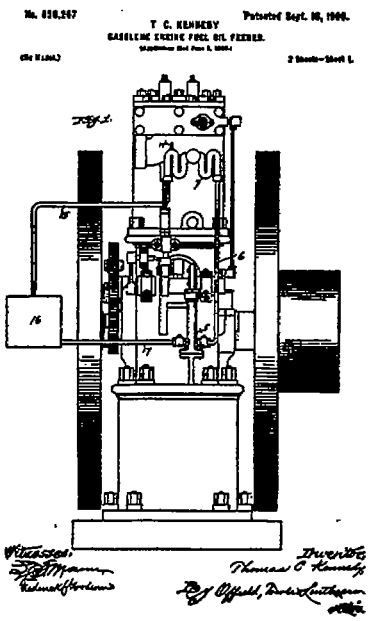
T. C. KENNEDY
GASOLENE ENGINE FUEL OIL FEEDER.
Patented Sept. 18, 1900.
2 Sheets-Sheet 1.
Fig. 1.
16
Witnesses:
Inventor,
Thomas C. Kennedy
By Offield, Towle & Linthicum
Attys.

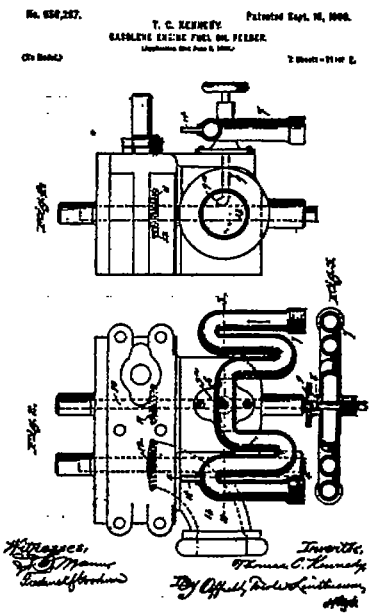
T. C. KENNEDY
GASOLENE ENGINE FUEL OIL FEEDER.
Patented Sept. 18, 1900.
Fig. 3.
Fig. 4.
Fig. 2.
Witnesses:
Inventor,
Thomas C. Kennedy
By Offield, Towle & Linthicum
Attys.

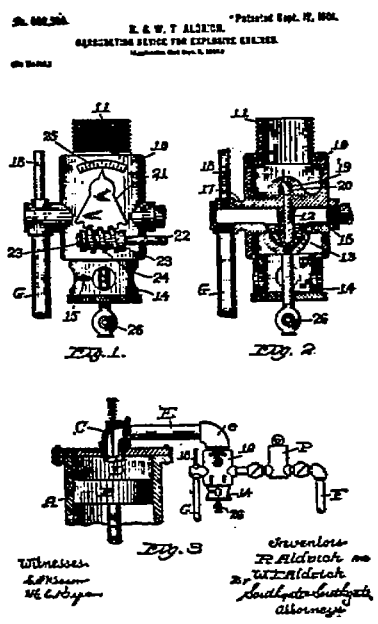
Fig. 1.
Fig. 2
Fig. 3
Witnesses
Inventors
attorneys

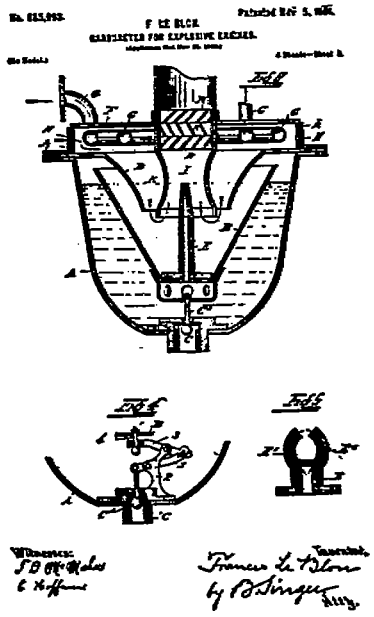
Fig 4
Fig 5
Fig 6
Witnesses
Inventor
Atty.

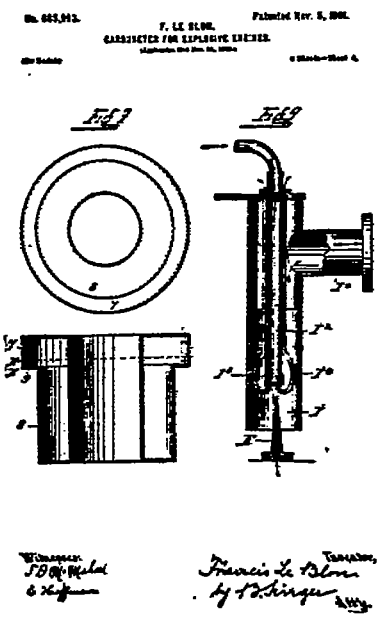
Fig 7
Fig 8
Witnesses
Inventor
Atty.

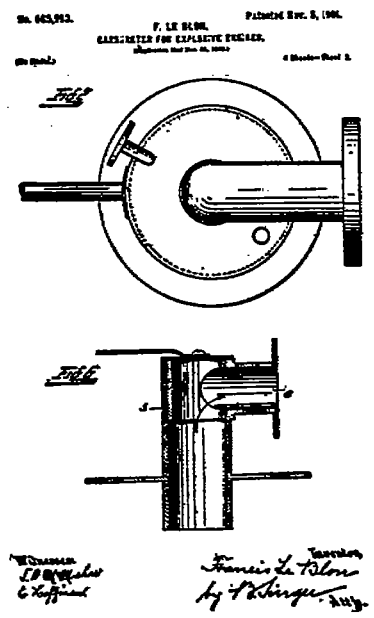
Fig 9
Fig 10
Witnesses
Inventor
Atty.

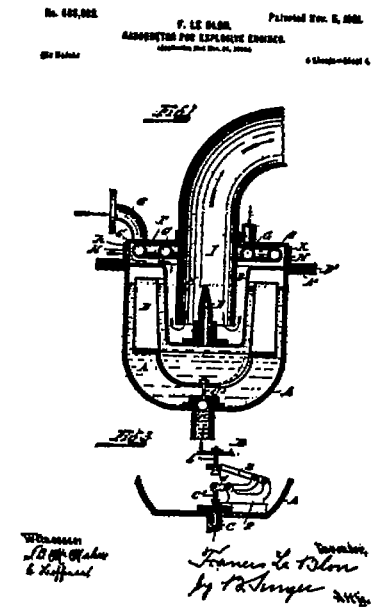

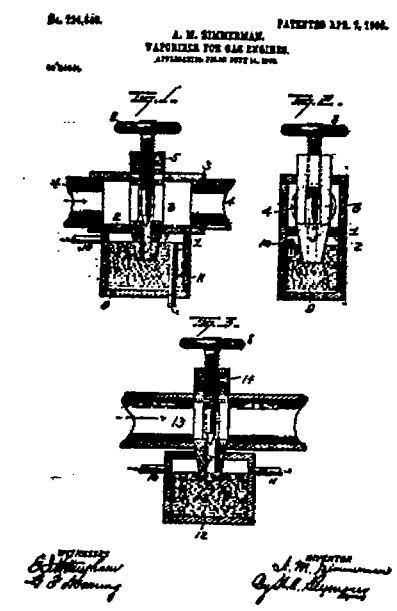

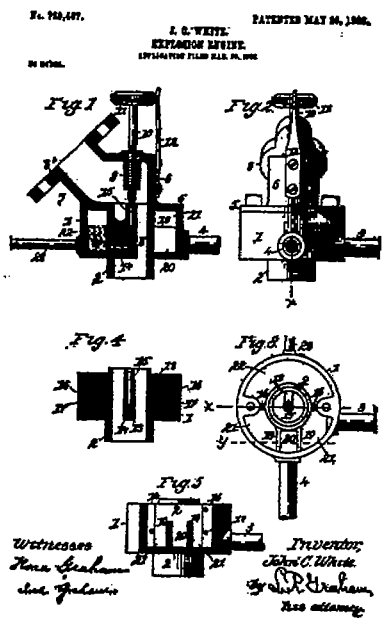

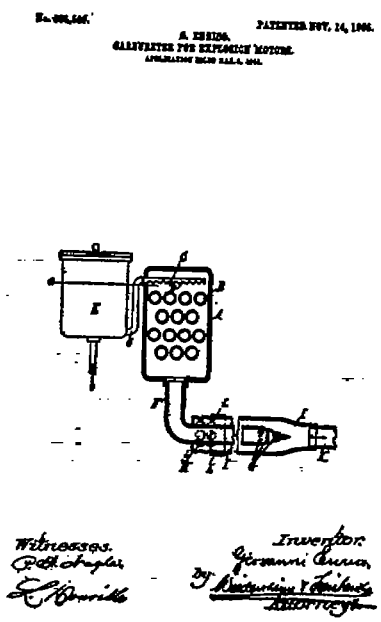

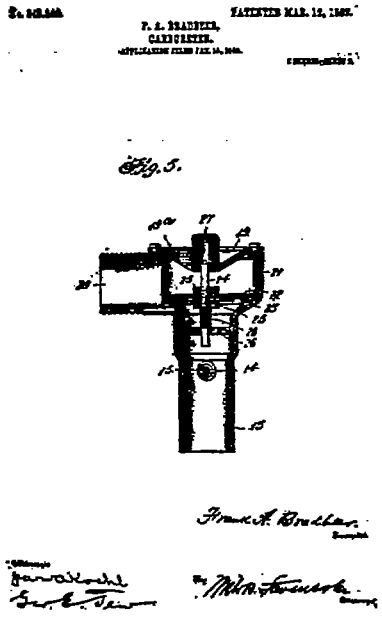
PATENTED MAR. 12, 1907.
F. A. BRADLEY.
CARBURETER.
Fig. 5.

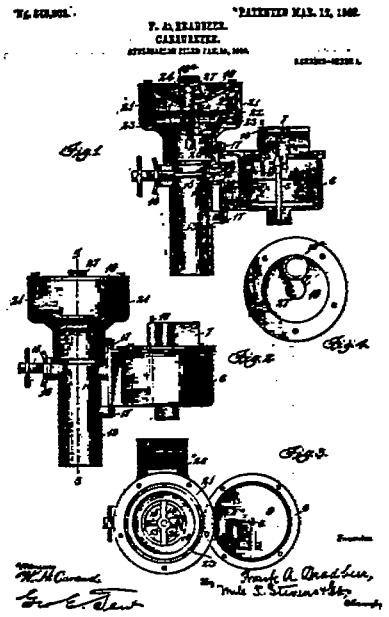
PATENTED MAR. 12, 1907.
F. A. BRADLEY.
CARBURETER.
Fig. 1
Fig. 2
Fig. 3
Fig. 4

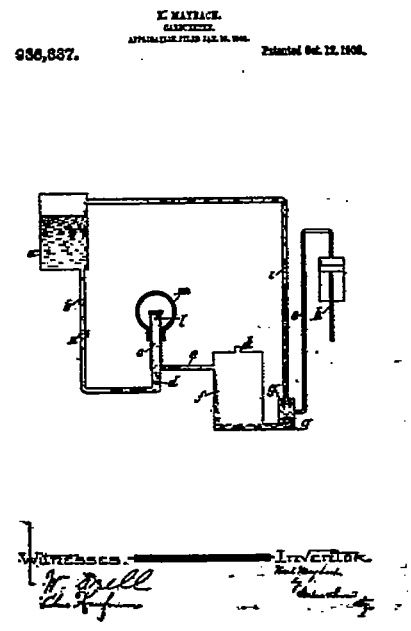
E. MATRACK.
CARBURETER.
936,637.
Patented Oct. 12, 1909.
WITNESSES.
INVENTOR.

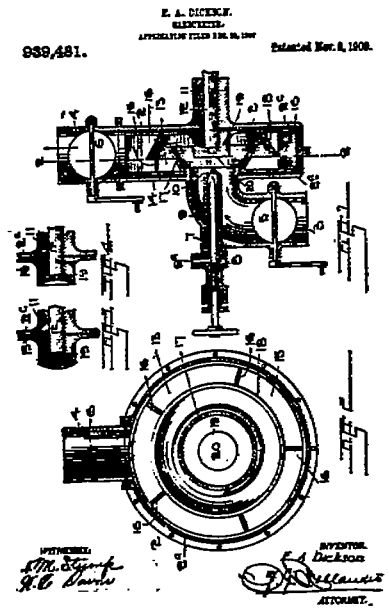
E. A. DICKSON.
CARBURETER.
939,481.
Patented Nov. 8, 1909.
WITNESSES.
INVENTOR.
ATTORNEY.

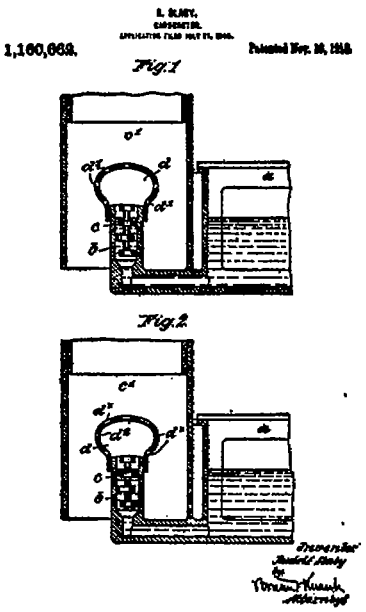
1,160,063.
Fig. 1
Fig. 2

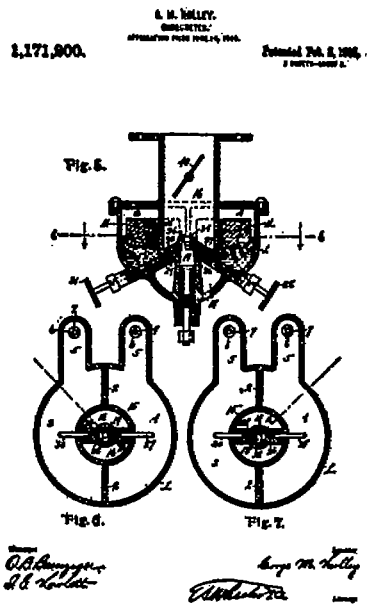
1,171,900.
Fig. 5.
Fig. 6.
Fig. 7.

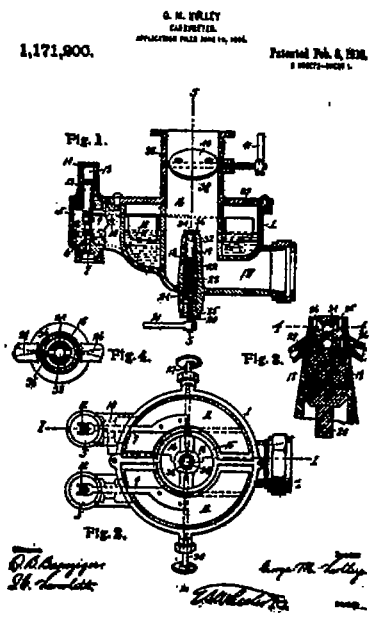
1,171,900.
Fig. 1.
Fig. 4.
Fig. 3.
Fig. 2.

another scheme for modifying fuel exit by causing a continuous circulation of fuel through the fuel nozzle in the direction of the fuel exit, the overflow chamber being incorporated in the nozzle, so there is always some velocity head of fuel, contributing to the fuel flow, in addition to the air-flow vacuum.

In all the cases so far the vacuum at the fuel inlet is due mainly or exclusively to an entrance resistance and flow resistance up to the fuel nozzle and not to any particular velocity head conditions, due to contractions of passage or to bends and baffles. On page 207 (939,481, Nov. 9, 1909, Dickson) the fuel nozzle is located in a curved elbow and the air will tend to crowd away from the jet more in proportion as its velocity is higher, so that the vacuum due to air velocity, independent of entrance resistance, will not increase at the fuel inlet as fast as the air flow itself does. This is a sort of corrector for the tendency toward excess recliners or increased flow. An indication of the recent, though as yet feeble, tendency to study the flow laws of passages of different forms and to develop flow passages that have suitable flow laws that contribute to proportionality is the peculiar fuel passage and nozzle on page 208. (1,160,662, Nov. 16, 1915, Slaby.) The perforated rose head may be so formed as to give quite a range of control of liquid flow vacuum at the top of the vertical tube, by location and size of the holes, and the baffles in the fuel passage may likewise serve as a means of control of the fuel flow law with reference to the effective vacuum, of course, each within suitable limits. Two fuels, each with its own float chamber and adjustably fixed fuel passage, discharge alternately to the same fuel nozzle by the turning of a central switch valve in the form on page 208 (1,171,200, Feb. 8, 1916, Holley) intended for engines starting on gasoline and later operated when hot on kerosene.

Subclass 3.1—Fuel inlet at air throat.—Contraction of the air passage walls in the manner used in injectors and compressed air spray nozzles but applied to aspirating flow is illustrated on page 211. (350,769, Oct. 12, 1886, Ragot & Smyers.) As here applied it delivers the mixture in whatever proportions the form and dimensions make possible to a heated pot for vaporization, so that the engine may operate as an oil engine on heavy fuel. This is another one of that class of oil engines developed from the gasoline engine by the addition to the latter of a mixture heater. Placing the fuel inlet at a restriction in the air passage or air throat or choke tube makes fuel flow primarily dependent on the air velocity head rather than entrance restriction, as illustrated on pages 211 and 212 (693773, Feb. 18, 1902, Bardwell), an axial parallel flow arrangement, and on page 212 (789,537, May 8, 1905, Growville & Arguembourg) a cross-flow arrangement, but without a fuel valve stem crossing the air passage. Such a throat arrangement of curved form where the fuel valves do cross is shown on page 212 (906,980, Dec. 15, 1908, Winton & Anderson), in which the air tends to beat against the fuel inlet, restricting its flow as the air velocity increases more than if the flow were parallel or than for plain cross flow, thereby tending to correct their fuel flow excesses at high rates. As the fuel inlet is submerged a pool will form, which on a sudden increase of air flow will be picked up and carried along aiding acceleration, so this is one form of

accelerating cup. A rather good form of air passage, practically a venturi tube, by reason of the small angle of the discharge cone, and having parallel axial flow, as shown on page 213 (954,905, Apr. 12, 1910, Wolf), which is also provided with a heating jacket between the float chamber and throat to promote vaporization. Heaters located like this will affect the densities of the fuel and air, and the viscosity of the former, and therefore change their proportionality accordingly. To secure an initial flow inducing vacuum of a given fixed minimum value, from which the vacuum may begin to rise instead of starting with zero with reference to flow rate, a light gravity loaded check valve striking a stop is used on page 213. (1,038,699, Sept. 12, 1912, Wilkinson.) This is of special service at low-rate flow or on idling, but in no other way does it change the proportionality characteristics of the other arrangements from what they would be with a fixed air inlet of area equal to that available with the air check valve open. Adaptation of the contracted throat means of developing a localized vacuum to induce fuel flow to the closed crank case form of two-cycle engine is illustrated on pages 213 and 214 (1,117,641, Nov. 17, 1914, Cottle), where the fuel inlet is at the throat and the upstream wide end of the conical air passage is connected to the top of the float chamber. In this way the fact that the air is under a pressure greater than atmosphere makes no difference in the flow proportionality. It is a good illustration of the fact that float chamber surface pressure equalization with the air supply passage adapts practically any carburetor to the use of compressed air, even though it were designed for pure aspiration from the free atmosphere. The curved air throat with cross fuel discharge and accelerating cup is illustrated again on page 214 (1,130,981, Mar. 9, 1915, Kingston), but with an additional element, a low speed lifting tube for wet mixture. Around the steam of the fuel adjusting valve a loose sleeve is placed, passing through the dividing wall, and through which the fuel and air will be lifted at low-flow rates by the head equivalent to the check ball. The lifting will be assured at rates so low as would fail to lift the fuel in an ordinary passage if, as is the case with most of the present day gasoline, it resists prompt vaporization. An interesting form of lifting tube passing directly through the center of a damper throttle is illustrated on page 214 (1,190,714, July 11, 1916, Bottome), here applied to a simple venturi throat carburetor of noncompensating form, but evidently applicable to others.

Subclass 3.2—Air guides or baffles.—The object of such baffles or air guides is to correct the tendency for fuel to increase faster than or just to mix the two. Arrangement of the air passage in the form of a return bend with a small tube projection in each leg permits the air velocity head to act positively at one and negatively on the other, and connection of one above and the other below the fuel surface in the closed constant-level chamber gives practically twice the flow-inducing pressure difference that is normally used. This is illustrated on page 215. (660,482, Oct. 23, 1900, Bates.) Mixing is the object of the helical baffle on page 216. (737,463, Aug. 25, 1903, Pearson.) Formation of a spraying passage in the main air passage by baffles is illustrated on page 216. (791,501, June 6, 1905, Richard.) Flow correction, the former action, will undoubtedly take place in the form,

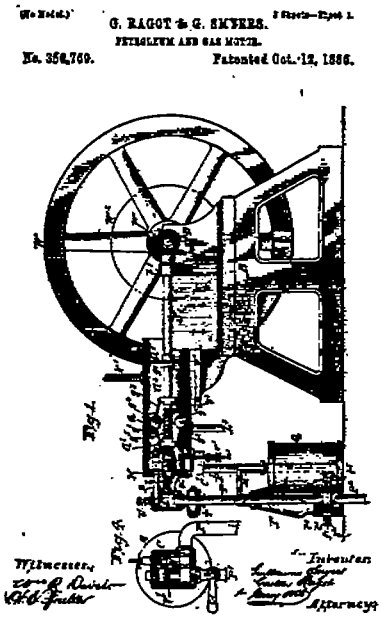
G. RAGOT & G. SMYERS.
PETROLEUM AND GAS MOTOR.
No. 350,769.
Patented Oct. 12, 1886.
Fig. 1.
Fig. 4.
Witnesses,
Inventors
Attorneys

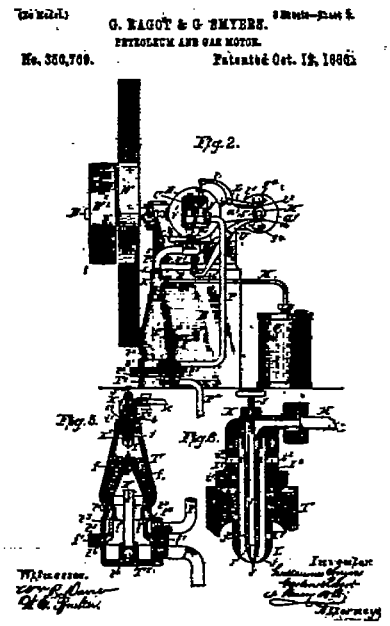
G. RAGOT & G. SMYERS.
PETROLEUM AND GAS MOTOR.
No. 350,769.
Patented Oct. 12, 1886.
Fig. 2.
Fig. 5.
Fig. 6.
Witnesses.
Inventors
Attorneys

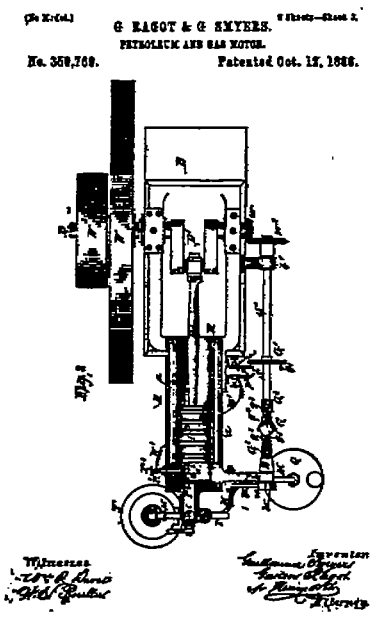
G. RAGOT & G. SMYERS.
PETROLEUM AND GAS MOTOR.
No. 350,769.
Patented Oct. 12, 1886.
Fig. 3
Witnesses
Inventors
Attorneys

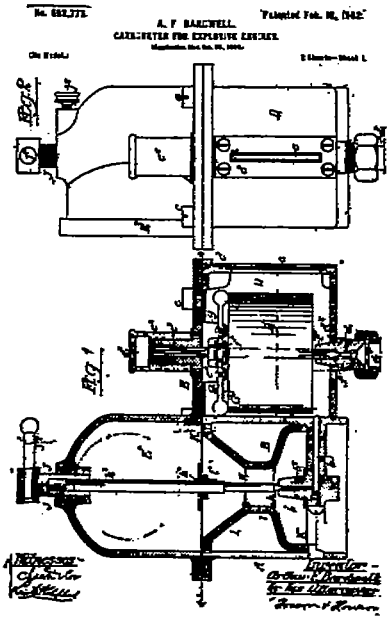
A. F. BARNWELL.
CARBURETER FOR EXPLOSIVE ENGINES.
Fig. 1
Fig. 2
Witnesses
Inventor

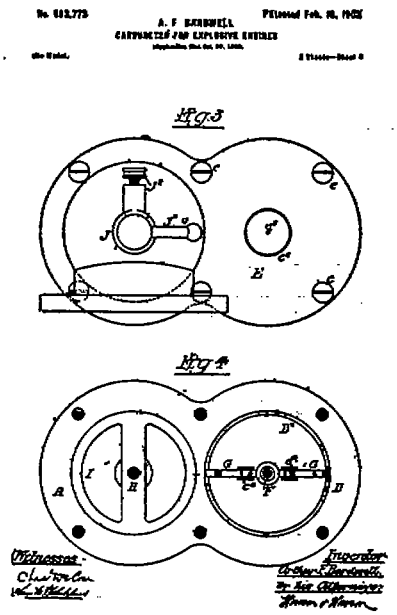
Fig. 3
Fig. 4
Witnesses
Inventor

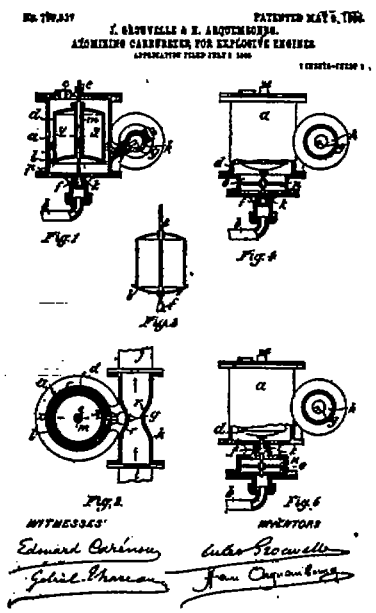
Fig. 1
Fig. 4
Fig. 5
Fig. 2
Fig. 6
WITNESSES
INVENTORS

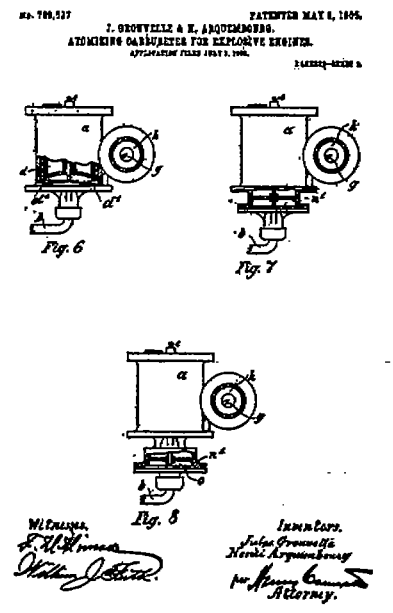
Fig. 6
Fig. 7
Fig. 8
Witnesses
Inventors
Attorney.

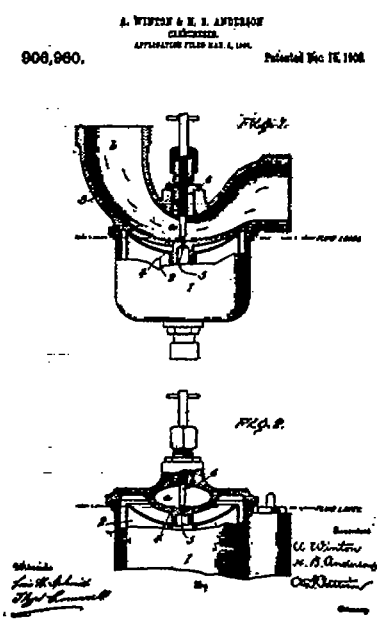
906,960.
Fig. 1.
Fig. 2.

A. M. WOLF.

1,064,488. Patented Jun. 10, 1913.

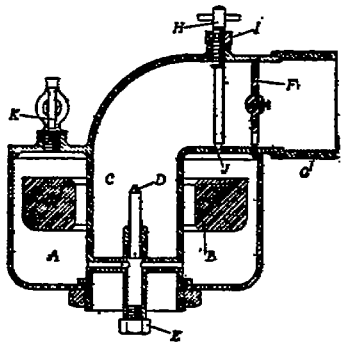

WITNESSES: INVENTOR.

J. WILKINS.

1,088,699. Patented Sept. 17, 1913.

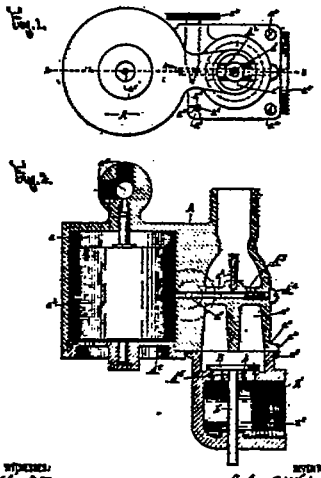

WITNESSES: INVENTOR. BY ATTORNEYS.

A. P. SOTTLE.

1,117,641. Patented Nov. 17, 1914.

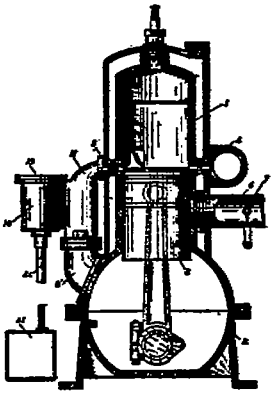

Fig. I.

Arthur P. Sottle

A. P. SOTTLE.

1,117,641. Patented Nov. 17, 1914.

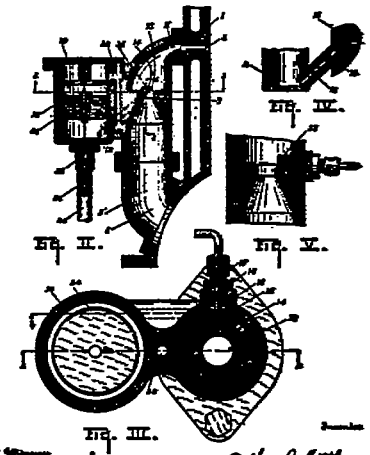

Fig. III.

Arthur P. Sottle

A. P. COTTLE.
INTERNAL COMBUSTION ENGINE.
APPLICATION FILED MAY 20, 1914.

1,117,641. Patented Nov. 17, 1914.

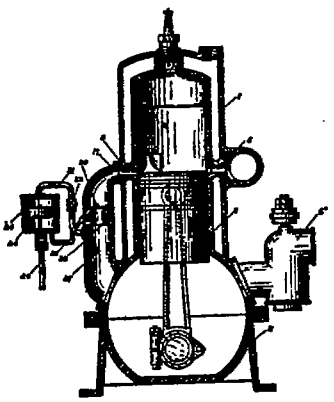

FIG. VI.

Witnesses
M. F. Chapman
L. G. Gerhardt

Inventor
Arthur P. Cottle
By Chappell & Earl
Attorneys

G. KINGSTON.
CARBURETER.
APPLICATION FILED SEP. 16, 1913.

1,130,981. Patented Mar. 9, 1915.

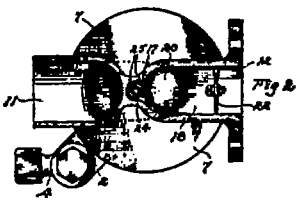

Fig. 2.

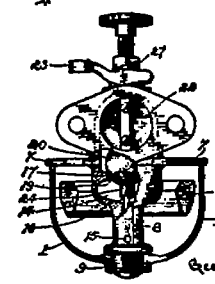

Fig. 3

Witnesses
A. G. Dow
A. E. McKenna

Inventor
George Kingston
By Robert Ritter
Attorney

G. KINGSTON.
CARBURETER.
APPLICATION FILED SEP. 16, 1913.

1,130,981. Patented Mar. 9, 1915.

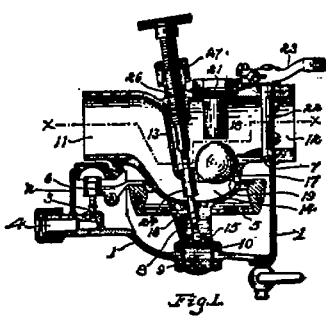

Fig. 1.

Witnesses
A. G. Dow
A. E. McKenna

Inventor
George Kingston
By Robert Ritter
Attorney

T. R. BETTCHER.
METHOD OF AND APPARATUS FOR CARBURETING.
APPLICATION FILED JULY 3, 1913.

1,190,714. Patented July 11, 1916.

Fig. 2.

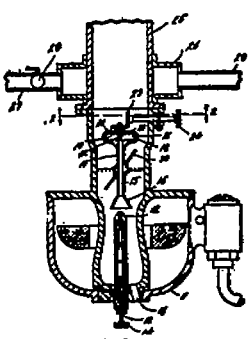

Fig. 3.

Witnesses
Emil Ulk
Joseph Geiger

Inventor
Turner R. Bettcher
By Albert G. Davis
Attorney

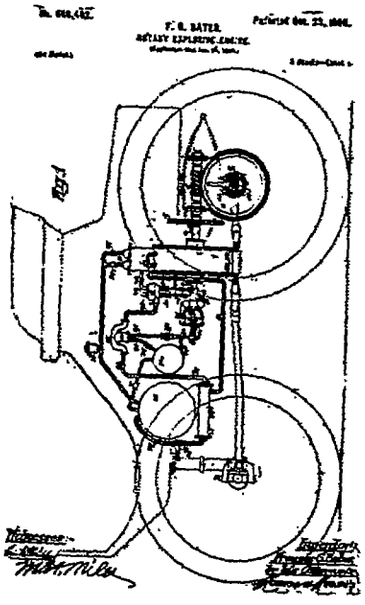

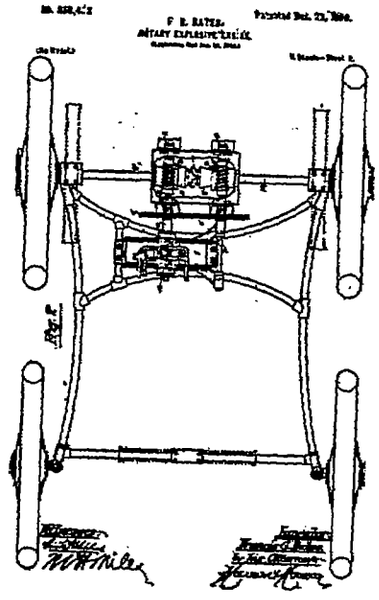

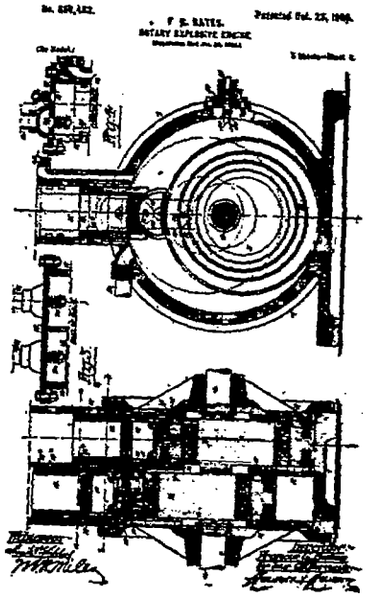

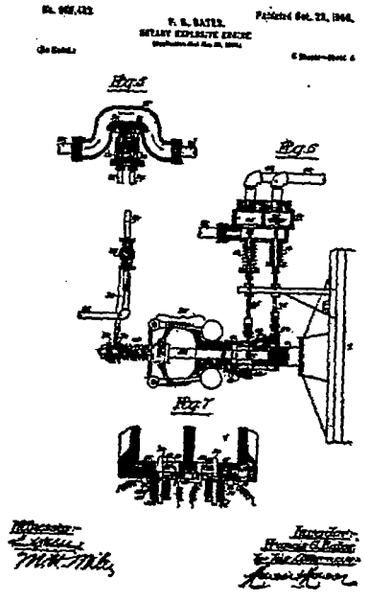

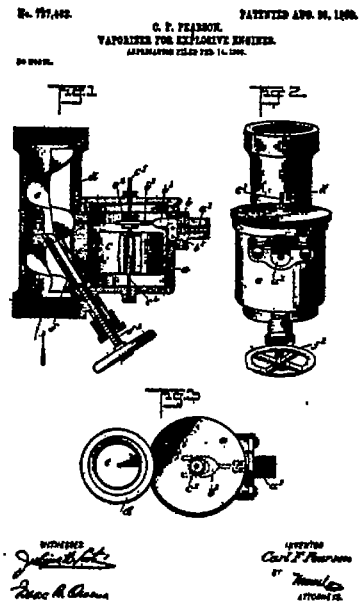
C. P. PEARSON.
VAPORIZER FOR EXPLOSIVE ENGINES.
Fig 1
Fig 2
Fig 3

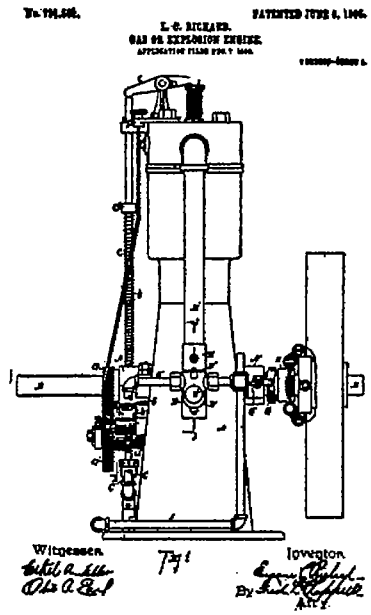
L. G. RICHARD.
GAS OR EXPLOSION ENGINE.
Witnesses.
Fig 1
Inventor.
By
Att'y.

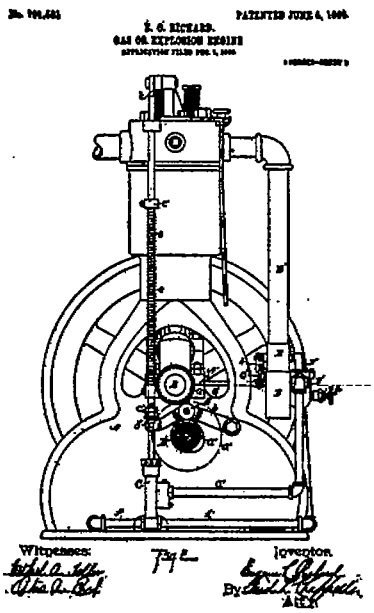
L. G. RICHARD.
GAS OR EXPLOSION ENGINE
Witnesses:
Fig 2
Inventor.
By
Att'y.

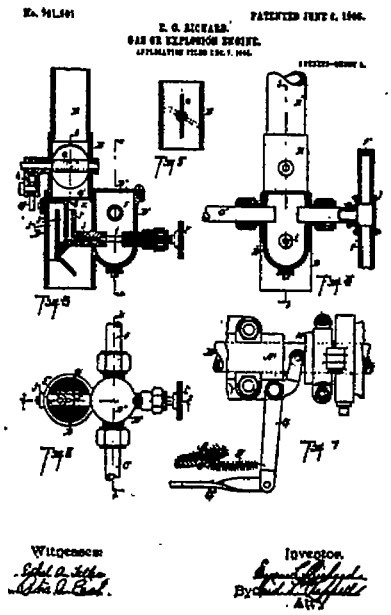
L. G. RICHARD.
GAS OR EXPLOSION ENGINE.
Fig 5
Fig 6
Fig 4
Fig 8
Fig 7
Witnesses:
Inventor.
By
Att'y.

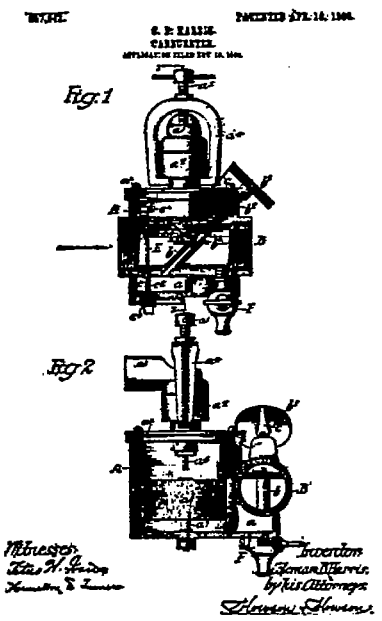
Fig. 1
Fig. 2
Witnesses
Inventor
by his Attorneys

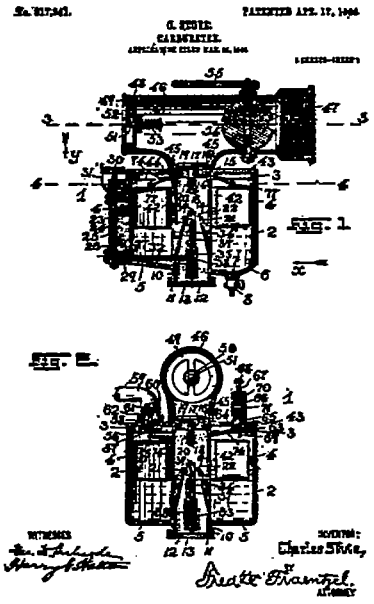
Witnesses
Inventor:
Charles Stute,
Attorney

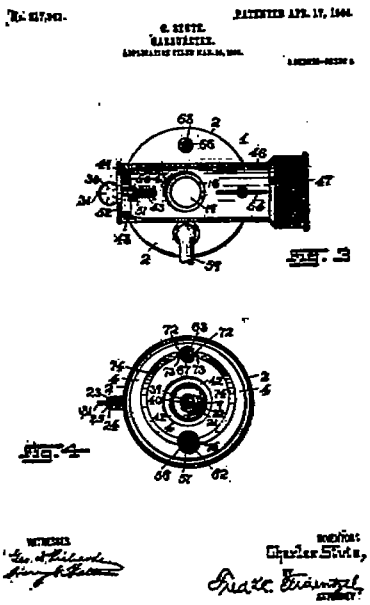
Witnesses
Inventor:
Charles Stute,
Attorney

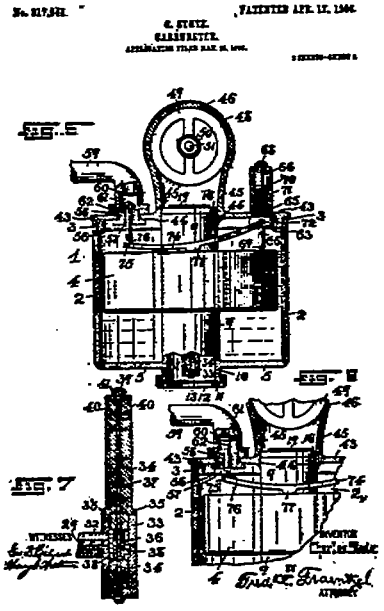
Inventor
Attorney

No. 862,083. PATENTED JULY 30, 1907.

C. I. LONGENECKER.

VAPORIZER FOR EXPLOSIVE-ENGINES.

APPLICATION FILED JAN. 19, 1907.

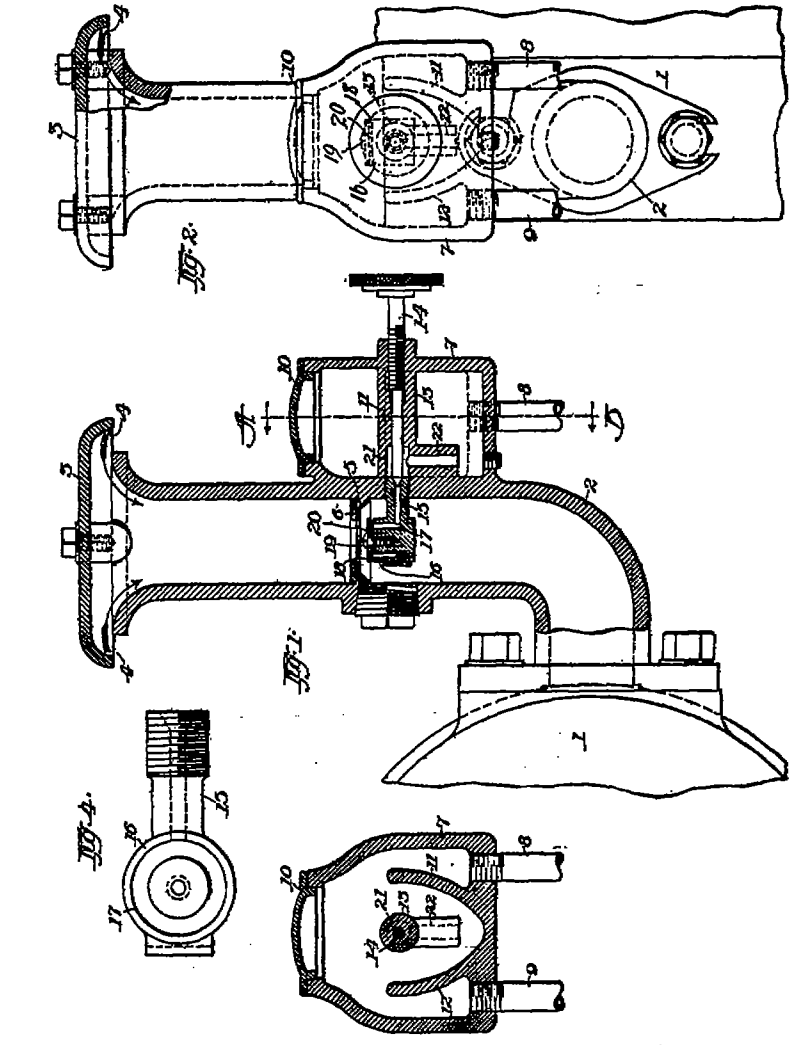

Witnesses:
J. M. Daggett.
F. W. Hoffmeister.

Inventor
Charles I. Longenecker
By E. W. Burgess
Attorney

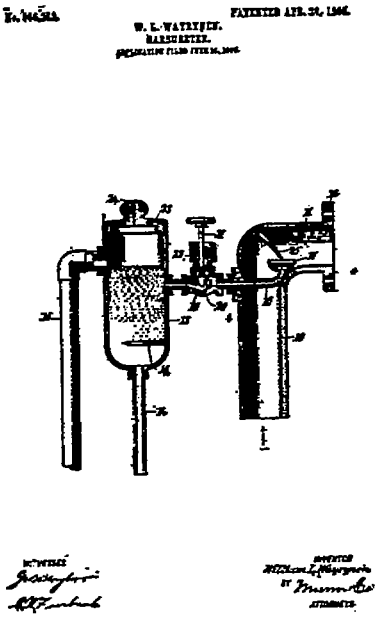
W. L. WATKINS.
CARBURETER.
PATENTED APR. 30, 1912.

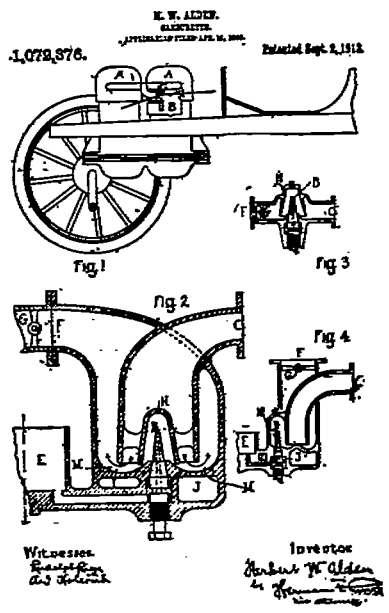
H. W. ALDEN.
CARBURETER.
1,072,876.
Patented Sept. 9, 1913.
Fig. 1
Fig. 2
Fig. 3
Fig. 4
Witnesses.
Inventor.

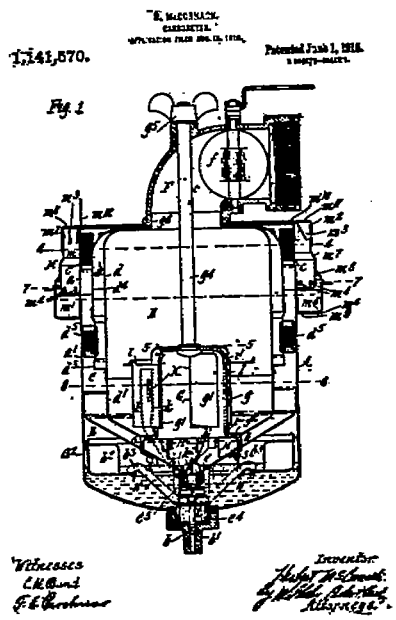
E. McCONNACK.
CARBURETER.
1,141,870.
Patented June 1, 1915.
Fig. 1
Witnesses
Inventor
Attorneys.

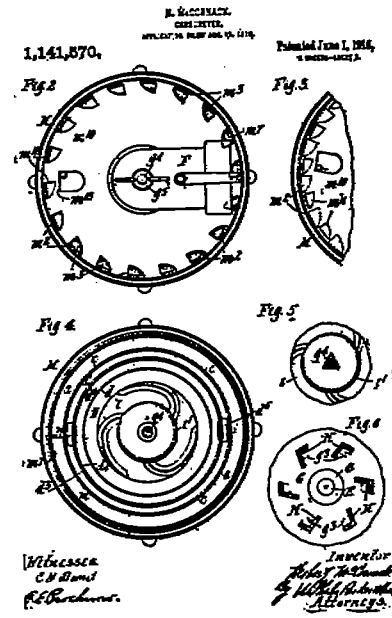
E. McCONNACK.
CARBURETER.
1,141,870.
Patented June 1, 1915.
Fig. 2
Fig. 3
Fig. 4
Fig. 5
Fig. 6
Witnesses
Inventor
Attorneys.

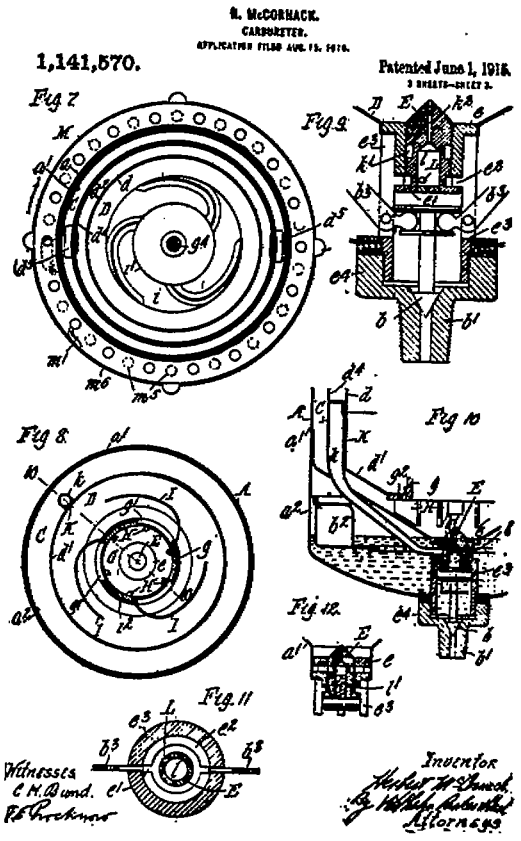
R. McCORMACK.
CARBURETER.
1,141,570.
Patented June 1, 1915.
Fig. 7
Fig. 8
Fig. 9
Fig. 10
Fig. 11
Fig. 12
Witnesses
C. H. Bond.
P. E. Prickner
Inventor
Robert McCormack
By Wilkie, Schwartz
Attorneys

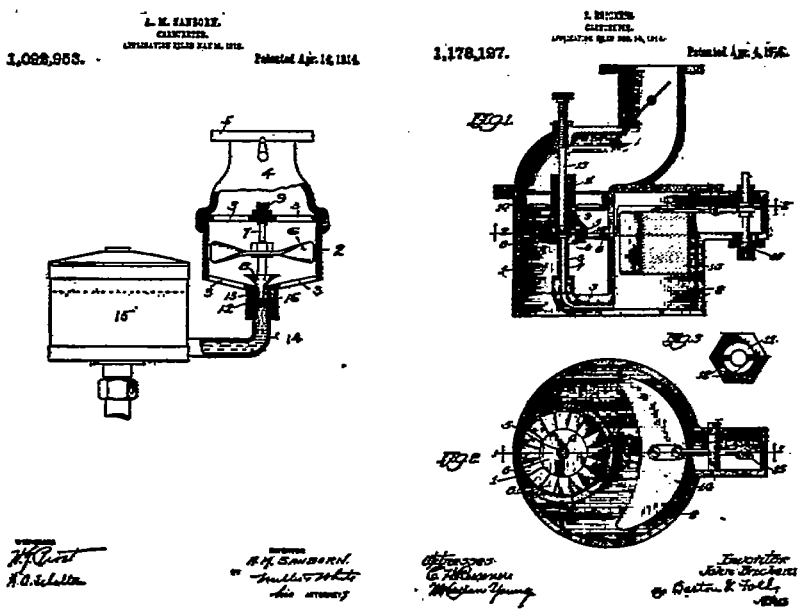
1,092,953.
Patented Apr. 14, 1914.
1,178,197.
Fig. 1
Fig. 2
Fig. 3

page 217 (817,641, Apr. 10, 1906, Harris), because the hanging wall will prevent any increased velocity head action at the final inlet, so fuel flow will increase with air only as a result of air entrance resistance without air velocity head assistance. Quite the contrary is the object on page 217 (817,941, Apr. 17, 1906, Stute), where the air is guided directly over the fuel inlet, contributing the maximum air velocity head effect on fuel flow added to the entrance resistance.

A circular-slot form of fuel inlet is shown on page 218 (862,083, July 30, 1907, Longenecker), so arranged behind an annular air baffle as to receive a similar additive effect of air entrance resistance and velocity head. Combination of a spraying arrangement of baffle with the accelerating-cup idea is illustrated on page 219. (886,283, Apr. 28, 1908, Wayrynen.) At low-flow rates the cup remains nearly full with the air sweeping off a surface film, but a sudden increase of air flow will sweep it clear of contents, adding this volume momentarily to the fuel that flows steadily at the new higher rates due to the greater vacuum. A complete shrouding of the fuel inlet with opposed axial flow to reduce to a minimum the velocity head effect, though not eliminating it, because there is some such action at the base of the shroud, is shown on page 219. (1,072,376, Sept. 2, 1913, Alden.) Location of the fuel inlet in the center of an air vortex produced by inward flow of air between radially curved vanes in the air passage is shown on pages 219 and 220. (1,141,570, June 1, 1915, McCormack.)

Subclass 3.3—Rotating fuel spreader, air driven.—While normally such attachments are arranged solely as mixers, they may in some cases exert a fuel-flow influence, producing to a partial degree the action of class 2. Such is the case, for example, with the form, page 221 (1,092,953, Apr. 14, 1914, Sanborn), but not so with the form on page 221 (1,178,127, Apr. 4, 1916, Bricken). In the former the fuel is subjected to a lifting action beyond its submerged measuring restriction, which reduces the degree of submergence and increases the flow, but in the latter form no fuel is subjected to the rotating influence until it has dropped free of the passages where its flow might be affected.

Subclass 3.4, variable jet and throat relation.—This is one of the most promising means of correcting for the tendency toward richness on increasing flow rates and is illustrated in one form on page 225 (1,086,226, Feb. 3, 1914, Sassano), where the fuel inlet while fixed is acted upon by the vacuum at a hole in a tube surrounding the nozzle. This tube rises with increased flow by reason of the baffles in the tapered passage, thereby raising the hole to a higher point where the vacuum is less at a given air-flow rate than at a low point. Therefore the flow rate for fuel will not increase as fast as if its inlet were acted on by the vacuum at a fixed point in the venturi. The action is corrective as to proportionality in a qualitative sense and can be made so to a proper degree by suitably curving the tapering walls. The effect is the same as if the fuel inlet were moved to that portion of the venturi, as would by the vacuum in it, produce the correct constant proportioning flow. In a different way the same effect is secured by moving an approximation to a venturi past a fixed fuel nozzle in the form, page 225 (656,197, Aug. 21, 1900, Lumiere), a case about 14 years older.

Subclass 3.5, variable float chamber pressure.—Moving the position of the fuel inlet with respect to the throat of a tapered air passage is equivalent to adjusting the fuel-flow head to that value that would give the correct constantly proportionate flow, by operating at the point of fuel exit from the fuel passage, but it is evident that a similar corrective pressure control could be exerted at the entrance end of the fuel passage, which is the float chamber, and such is the subject matter of this subclass, the first case in which is that illustrated on page 226 (686,101, Nov. 5, 1901, Maybach), serviceable only for constant speed engines. Combination of the Venturi tube air throat, having a right-angled fuel nozzle, with the float chamber surface pressure means of compensation, is illustrated on page 226 (741,962, Oct. 20, 1903, Grouvelle & Arquembourg). By means of two calibrated holes above the fuel, one to the atmosphere and the other to the Venturi throat, the float-chamber pressure can be kept at a regularly increasing value below atmosphere as the flow rate increases. Another case of different form is that on page 226. (954,488, Apr. 12, 1910, Wolf.) Here the float chamber is brought into communication with the mixing chamber by a valve, and air entrance to the float chamber by another valve. Adjustment of these two valves will permit of the establishment of any effective head on the fuel from zero when the latter valve is shut off and the former open up to the maximum when the former is shut off and the latter open. Opening both gives an intermediate effect. Such an adjustment, however, is similar to an adjustment of an air or a fuel valve by hand, and there is no assurance that the variations in float chamber pressure with a fixed valve setting will be just what is needed to compensate for fuel flow excesses. One attempt in this direction is that on pages 226 and 227 (1,002,646, Sept. 5, 1911, Conrad), where holes at the entrance and exit of the air venturi communicate with the float chamber with a view to making its pressure automatically, the mean between them, or the vacuum half that in the mixing chamber. In this way the fuel flow is definitely corrected to a fixed degree, but there is no assurance that this is the right degree nor that the correction should be always the same fraction. Another effort to secure a definite degree of float chamber pressure change from atmosphere but in the excess direction is that on page 227 (1,064,627, June 10, 1913, Ensign), where the pressure in the float chamber is the velocity head of the air in an entrance passage, brought to bear by pitot tube and pipe connection. In addition, the air enters in a vortex, at the center of which is the fuel inlet, so placed with reference to a dome baffle as to be in a region of low vacuum, the dome also acting as throttle. Neglecting the vacuum at the fuel nozzle the effect should be the same on the fuel flow as if a fuel nozzle of the same shape were located in the same place as the Pitot tube, but pointing in the opposite direction and fed from a constant level chamber open to the atmosphere.

Adjustment of float chamber pressure to a definite degree is accomplished, pages 227 and 228 (1,074,625, Oct. 7, 1913, Johnson, Glaser & Lloyd), by connecting it with one point of a Venturi tube while the fuel inlet is located at another point. This case is of interest also because it illustrates a diaphragm-controlled fuel-level valve.

Class 4, carburetors, proportioning flow, aspirating single fuel, multiple air inlets, both fixed.—Most of the carburetors of this class have only two air inlets, and these arranged as primary and secondary, but the effectiveness of this arrangement over a single air inlet depends entirely on the details. When the two air streams enter through fixed inlets that are similar and similarly placed, the second is of no more value than a change in adjustment of either a single air or a single fuel inlet. In such a case there can be no fuel flow compensation or correction of proportions to restore a changing proportion to constancy, because the ratio of primary to secondary air will be constant and the total no different with respect to fuel than if it all entered at one point, however much the mixing may be improved. To accomplish compensation the secondary air should increase faster than the primary in ordinary arrangements to compensate for the fuel that naturally tends to increase too fast, and this requires that the resistance to entrance of the secondary be increasingly smaller than that of the primary as the total flow increases. Both kinds of arrangements are illustrated, page 229 (772,979, Oct. 25, 1904, Vaurs), being of the fixed ratio sort, primary to secondary air, page 229 (848,170, Mar. 26, 1907, Hedstrom) tending toward correction by inserting a helical resistance baffle in the primary air.

Application of a Venturi air tube type carburetor with primary and secondary air, mutually adjustable by hand to the carbureting of air under pressures greater than atmosphere, is illustrated on pages 229, 230, and 231 (991,029, May 2, 1911, Scott), without in any way interfering with the aspirating character of the fuel, because the float chamber surface pressure is equalized with that of the source of air supply. Incidentally this is an interesting form of two-cycle engine in which the crank end of the cylinder acts as air pump, permitting the open type of frame to be substituted for the then more common form of closed crank case. This form, shown on page 231 (1,159,167, Nov. 2, 1915, Breeze), goes further in seeking compensation by the use of a Venturi for both air passages, that for primary air being very small and discharging into the throat of the large secondary. A short free passage for the secondary, and a longer more resistant passage for the primary, so related that the primary helps to induce the secondary, is shown on page 231. (1,134,365, Apr. 6, 1915, Barnes.) This same case also illustrates an interesting form of low velocity or idling lifting tube, brought into action by closing the throttle, which act diverts the mixture from the low velocity main air passage to a small high velocity by-pass, helping to lift unvaporized fuel. Even though the whole arrangement is such as to conform to the principle of increasing ratio of secondary over primary air, it does not follow that the amount of change will be just what is required for compensation; it may be qualitatively proper, but quantitatively improper or inadequate.

Subclass 4.1, mixed flow.—Admission of air to the fuel passage is a direct means of compensation qualitatively correct and questionable only as to degree, because any such air reduces at once the vacuum that is inducing flow, and, therefore, reduces the flow so that if admitted to the right place and in the right degree it would constitute a satisfactory fuel-flow corrector and result in constancy of proportions when otherwise the fuel ratio would be increasing. The

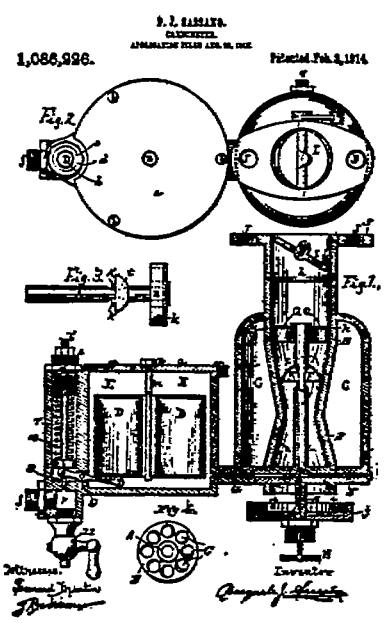
1,086,226.
Fig. 2.
Fig. 3.
Fig. 1.
Fig. 4.

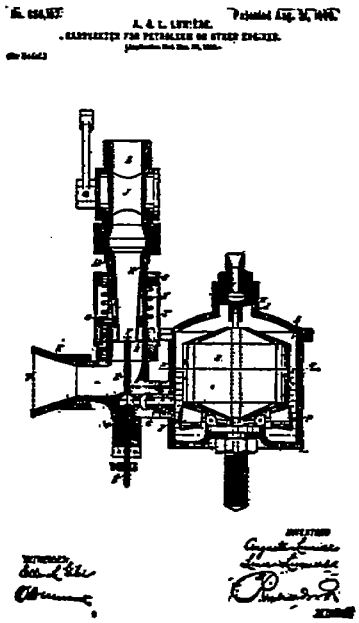

No. 741,542. PATENTED OCT. 20, 1903.

J. GROUVELLE & E. ARQUEMBOURG.

REGULATOR FOR CARBURETERS FOR EXPLOSIVE ENGINES.

APPLICATION FILED JULY 2, 1900.

NO MODEL.

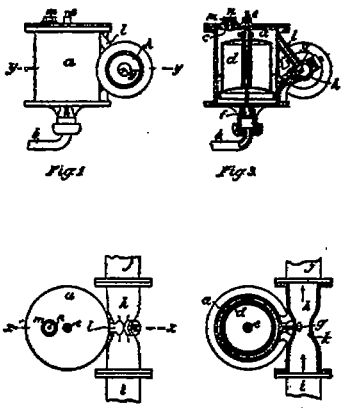

Fig. 1 Fig. 2

Fig. 3 Fig. 4

Inventors

Witnesses:

No. 840,591. Patented Dec. 8, 1906.

W. A. MAYBACH.

REGULATION DEVICE FOR EXPLOSION MOTORS.

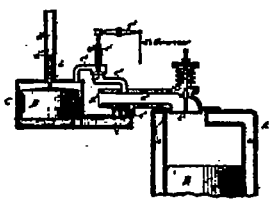

Witnesses:

Inventor

954,905. Patented Apr. 12, 1910.

A. M. WOLF

CARBURETER.

APPLICATION FILED MAY 4, 1909.

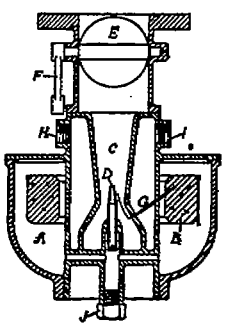

Witnesses:

Inventor

1,009,646. Patented Nov. 21, 1911.

F. CORSAR.

CARBURETER.

APPLICATION FILED FEB 26, 1906.

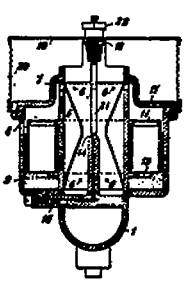

Fig. 2.

Witnesses:

Inventor

By

Attorney

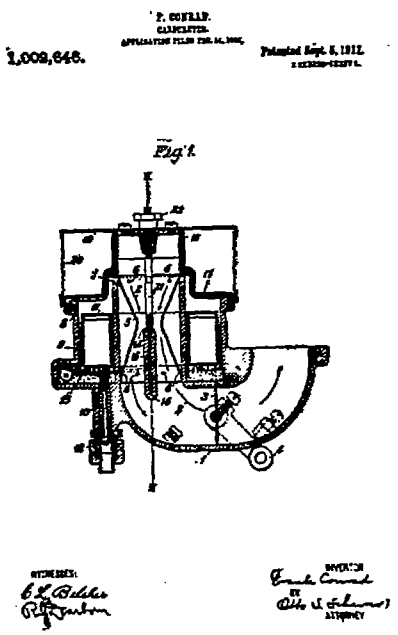
1,009,646.
Fig. 1.

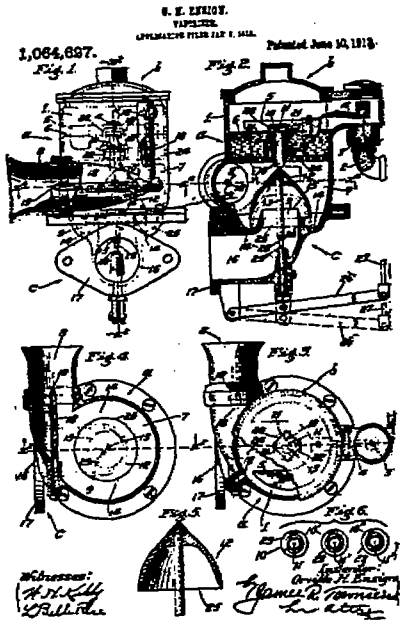
1,064,627.
Fig. 1.
Fig. 2.
Fig. 3.
Fig. 4.
Fig. 5.
Fig. 6.

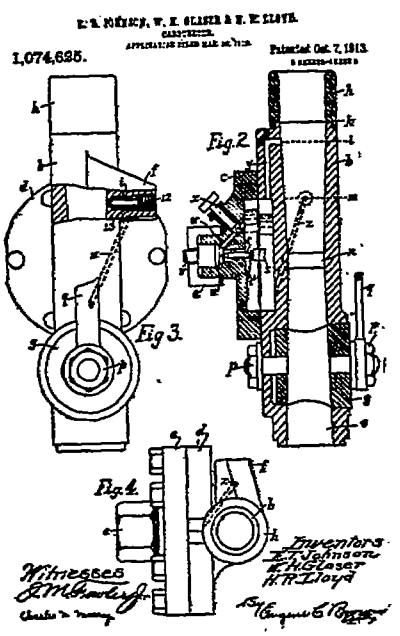
1,074,625.
Fig. 2.
Fig. 3.
Fig. 4.

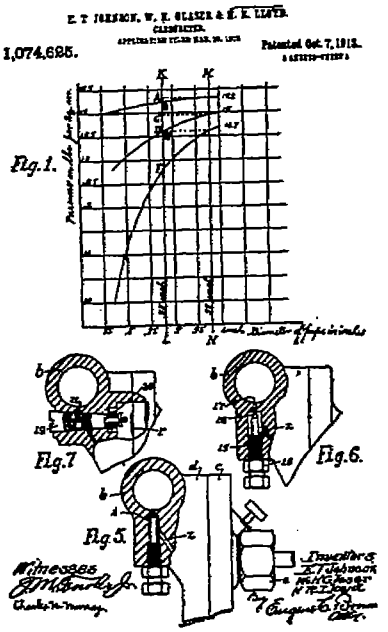
1,074,625.
Fig. 1.
Fig. 7.
Fig. 6.
Fig. 5.

E. T. JOHNSON, W. H. GLASER & H. R. LLOYD.
CARBURETER.
APPLICATION FILED MAR. 16, 1912.

1,074,625. Patented Oct. 7, 1913.

Fig. 9.

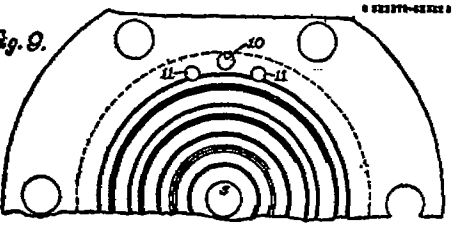

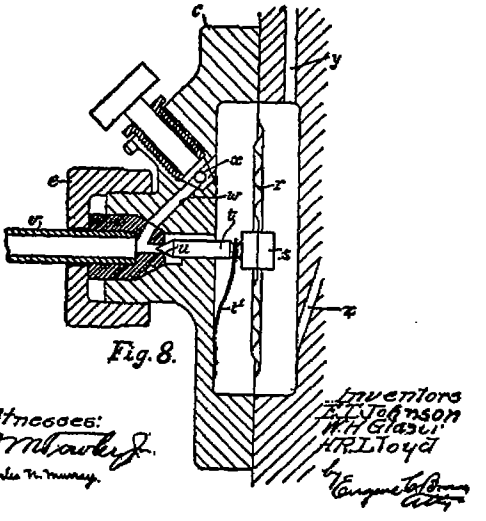

Fig. 8.

Witnesses:
J. M. Crawley Jr.
Charles N. Murray.

Inventors
E. T. Johnson
W. H. Glaser
H. R. Lloyd
by Eugene G. Brown
Atty.

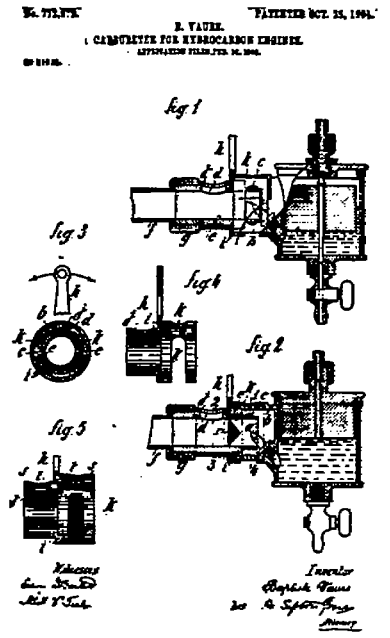
PATENTED OCT. 25, 1904.
B. VAUEL.
CARBURETER FOR HYDROCARBON ENGINES.
Fig. 1
Fig. 3
Fig. 4
Fig. 2
Fig. 5

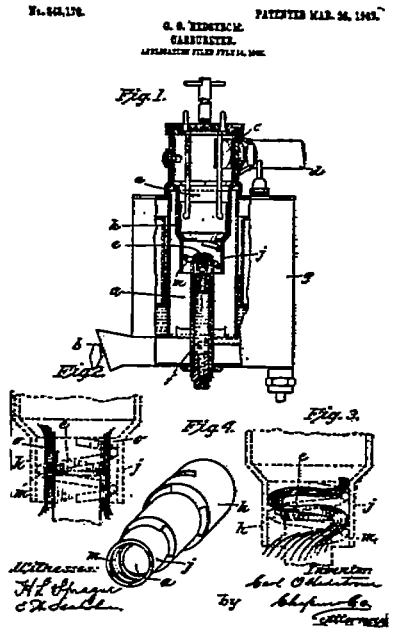
PATENTED MAR. 26, 1907.
G. S. REDSTRCM.
CARBURETER.
Fig. 1.
Fig. 2.
Fig. 4.
Fig. 3.

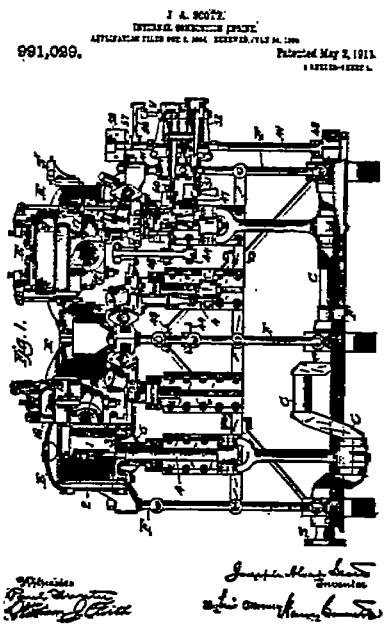
J. A. SCOTT.
991,029.
Patented May 2, 1911.
Fig. 1.

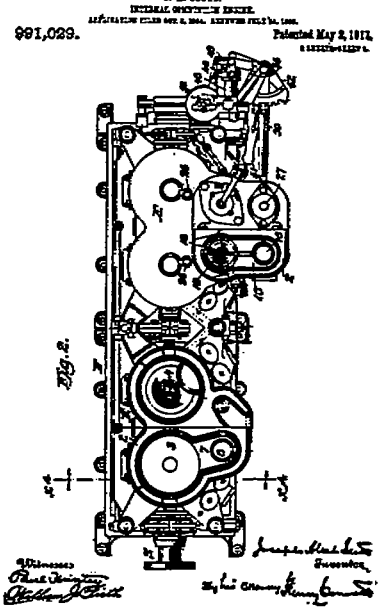
J. A. SCOTT.
991,029.
Patented May 2, 1911.
Fig. 2.

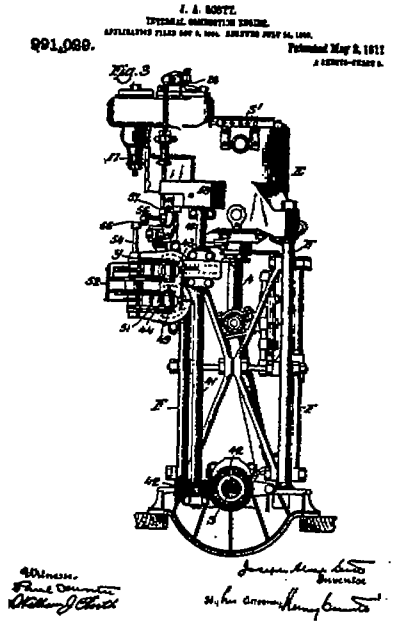
J. A. SCOTT.
991,029.
Patented May 2, 1911.
Fig. 3

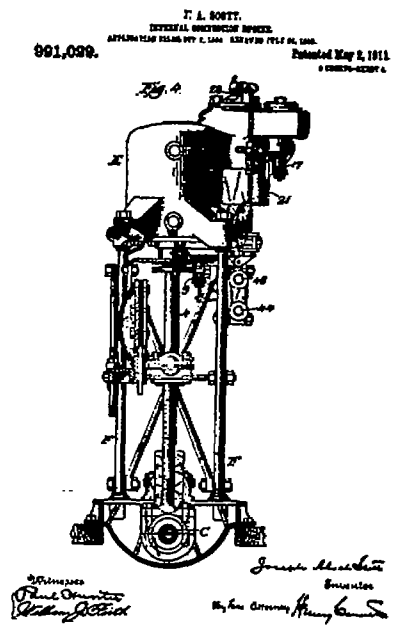
J. A. SCOTT.
991,029.
Patented May 2, 1911.
Fig. 4

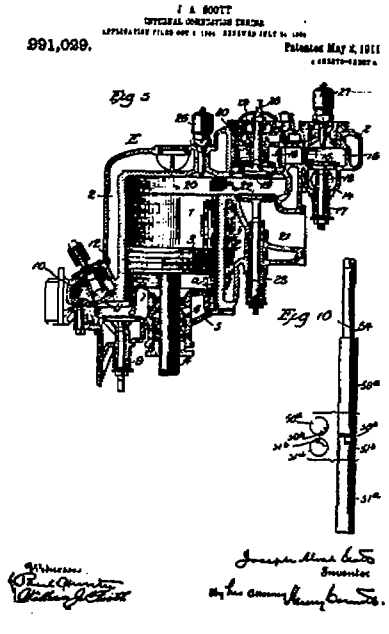
J. A. SCOTT.
991,029.
Patented May 2, 1911.
Fig 5
Fig 10

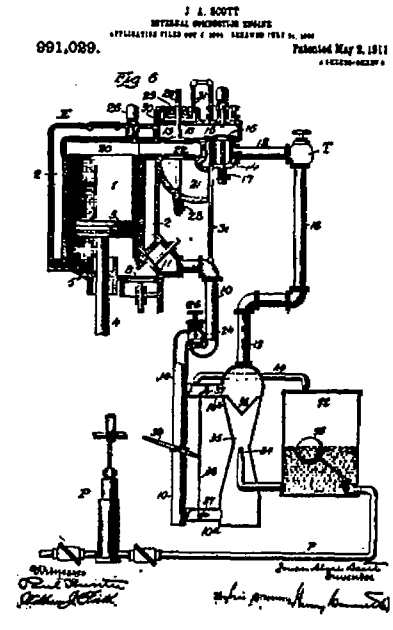
J. A. SCOTT.
991,029.
Patented May 2, 1911.
Fig 6

T. A. SCOTT.

991,039. Patented May 9, 1911.

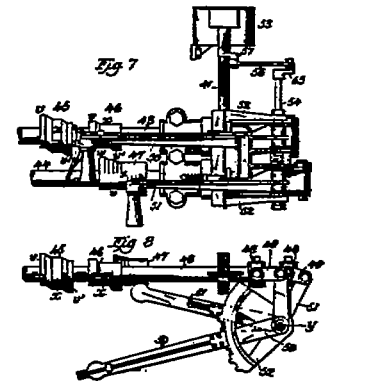

T. A. SCOTT.

991,039. Patented May 9, 1911.

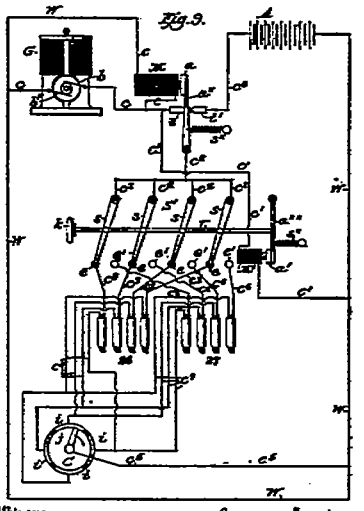

G. A. BREEZE.

1,159,167 Patented Nov. 2, 1915.

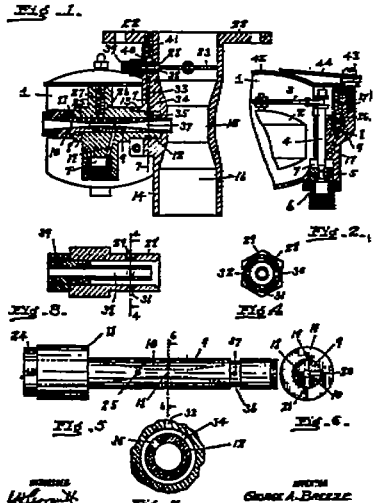

L. T. BARKER.

1,184,365. Patented Apr. 4, 1916.

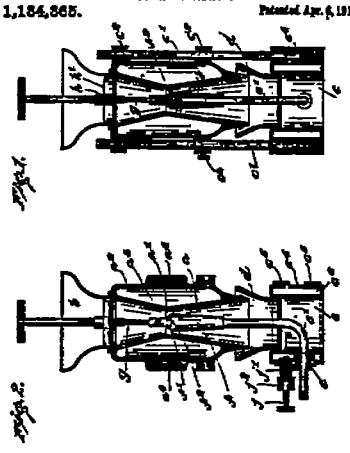

problem is, therefore, one of how, where, and to what degree the mixed-flow air should be admitted so that as the main flow increases the mixed-flow air increases regularly to just the amount needed to keep the fuel flow from increasing too fast. While the mixed-flow idea as a compensating means is one of the latest to be recognized, it has been disclosed for quite some time in connection with a single fixed fuel inlet and one other fixed air. One early case, that on page 233 (681,382, Aug. 27, 1901, Westman) shows it applied to the old overflow type of stationary engine level cup, extending its value for throttle-governed engines, where without it trouble would result, however satisfactory the operation might be for hit-and-miss governed engines. Another case of stationary engine use is that on page 233 (684,662, Oct. 15, 1901, Ahara), where it is combined with an accelerating cup brought into play and emptied after a miss to supply fuel to the extra air in the engine clearance over what is there after an explosion. A very simple form of mixed-flow type of compensator applied to a carburetor having the overflow sort of constant level chamber is shown on page 224. (686,092, Nov. 5, 1901, Lear.) Another and also simple form used in connection with a float chamber and curved venturi main air passage is that on page 233 (898,920, Sept. 15, 1908, Pierson), where, as in the case on page 233 (Westman), the fuel valve is drilled.

A more definite means of regulating the mixed-flow air is that on page 235 (1,121,630, Dec. 22, 1914, Holley), where the lowering of the level in the float chamber that results from high-flow rates is relied upon to admit air to the fuel passage, and the construction is used in conjunction with an accelerating cup beyond the fuel inlet. The presence of the drain hole at the low point of the mixing chamber is an indication of the difficulty in vaporizing modern gasolines, which at low-flow rates tend to accumulate and when enough has collected to suddenly overflow. In place of such drain holes it has become the practice to provide a lifting tube, extending above the throttle. A most interesting mixed-flow fuel nozzle is that on page 235 (1,130,490, Mar. 2, 1915, Delaunay & Belleville), where the amount of such air is controlled by the velocity in the throat. Another case controlled by the level in an auxiliary well, which also acts as accelerating cup, is shown on page 235. (1,149,035, Aug. 3, 1915, Doué.) Here the fuel passage is supplied from two orifices to the float chamber with a siphoning well between them, which well fills at low-flow rates only one fuel orifice supplying the nozzle. A sudden increase in demand empties the well and exposes a series of air holes through which air enters to retard the fuel flow, the number depending on the vacuum, as the second fuel orifice acts to close them against the vacuum tending to expose them.

This principle of fuel-flow compensation directly acting on the net fuel head by admission of air to the fuel passage, termed mixed flow, illustrated here in connection with a single fuel-fixed inlet and one other fixed-air inlet, will be found in use with other fuel and air inlet combinations, as is also the case with its counterpart compensating scheme, the control of float chamber pressure.

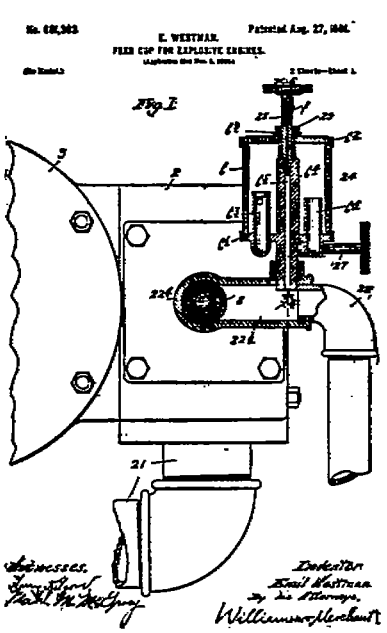
E. WESTMAR.
FEED CUP FOR EXPLOSIVE ENGINES.
Fig. 1.
Witnesses.
Inventor
Emil Westmar
by his Attorneys.
Williamson & Merchant

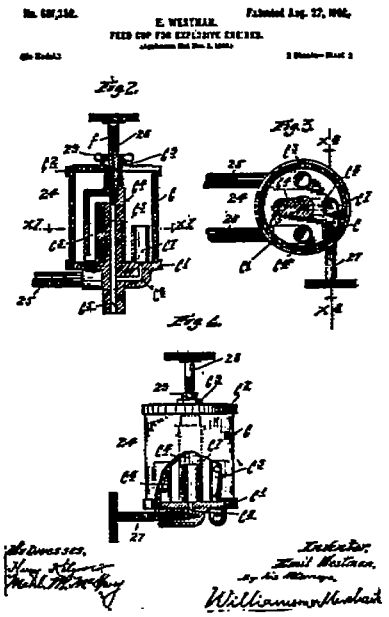
E. WESTMAR.
FEED CUP FOR EXPLOSIVE ENGINES.
Fig. 2.
Fig. 3.
Fig. 4.
Witnesses.
Inventor.
Emil Westmar.
by his Attorneys.
Williamson & Merchant

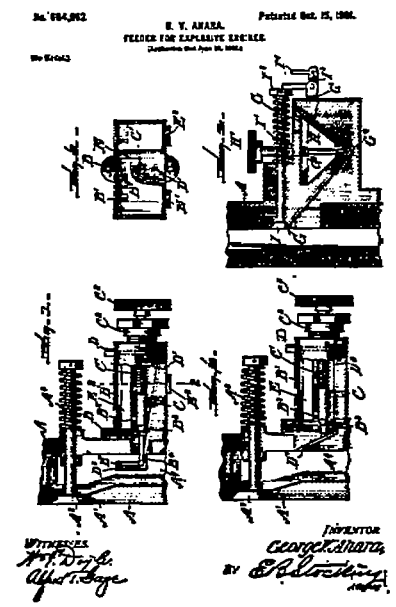
E. V. AMARA.
FEEDER FOR EXPLOSIVE ENGINES.
Witnesses
Inventor
George Amara,
By

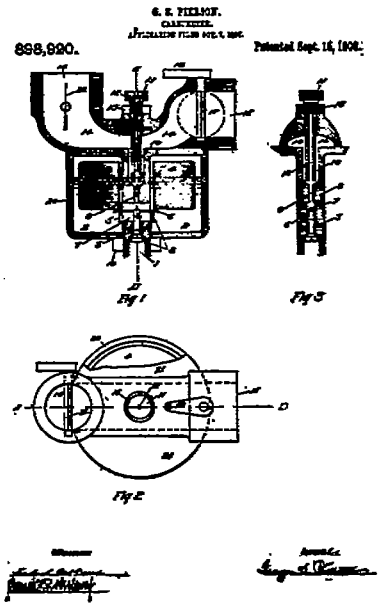
G. E. PIELSON.
CARBURETER.
898,920.
Patented Sept. 15, 1908.
Fig 1
Fig 3
Fig 2

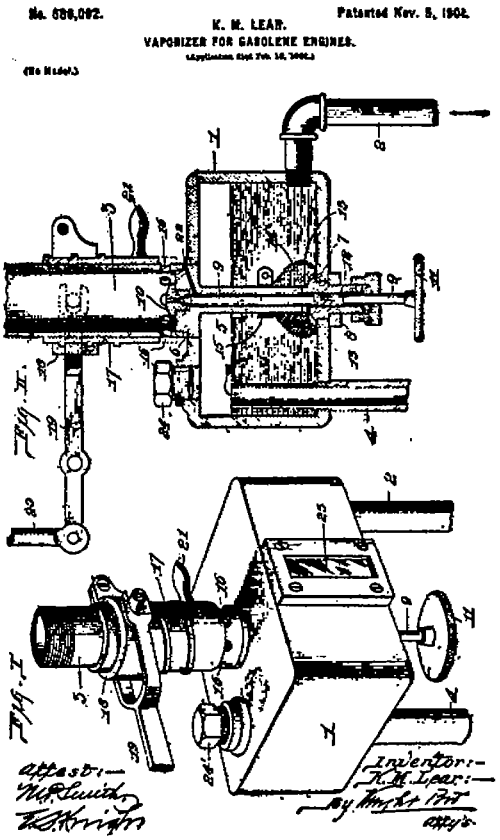
No. 686,092.
Patented Nov. 5, 1901.
K. M. LEAR.
VAPORIZER FOR GASOLENE ENGINES.
(No Model.)
Fig. II.
Fig. I.
Inventor:—
K. M. Lear:—
by Wright Brot
Attys.
Attest:—
W. F. Lynch
E. C. Kristy

G. M. ROLLET.
CARBURETER.
APPLICATION FILED JULY 10, 1908.

1,121,630. Patented Dec. 22, 1914.

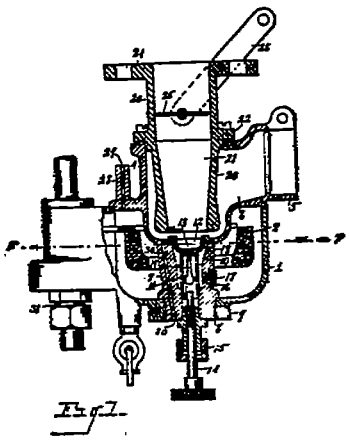

G. M. ROLLET.
CARBURETER.
APPLICATION FILED JULY 10, 1908.

1,121,630. Patented Dec. 22, 1914.

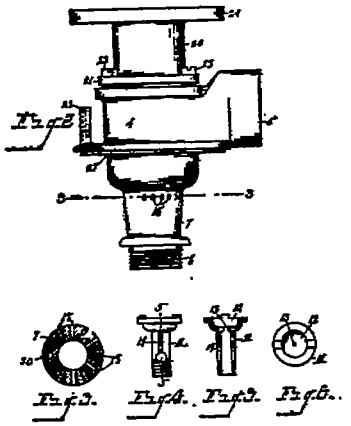

R. DELAUNAY-BELLEVILLE.
CARBURETER.
APPLICATION FILED MAR. 20, 1908.

1,130,490. Patented Mar. 2, 1915.

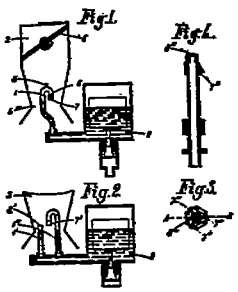

E. E. E. DOUÉ.
CARBURETER.
APPLICATION FILED AUG. 8, 1913.

1,149,035. Patented Aug. 3, 1915.

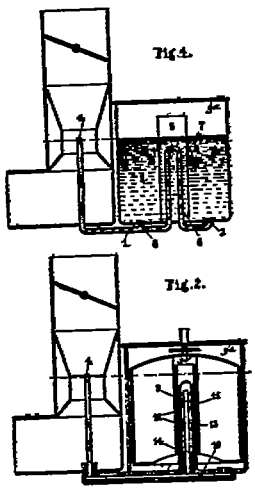

Witnesses.
Inventor
E. E. E. Doué
By
Attorney

Class 5—Carburetors, proportioning flow, aspirating, multiple fuel single air inlets, both fixed.—Just as two or more fixed air inlets, differently situated or having different flow characteristics associated with a single fixed fuel inlet may be made to act in a compensating manner, so also is it possible to fix more than one fuel inlet in a single fixed air passage, the problem being to discover such an arrangement as will result in a combined fuel flow from all of the several differently situated fuel inlets, that will increase with the air in a constant ratio instead of an increasing ratio, as would be the case if all were similarly situated, and therefore equivalent to one. In some cases, however, the two fuel inlets are arranged so that a correct ratio of fuel to air can be obtained at low speed or low flow rates by manual adjustment, and also again at high speed, the intermediate ranges being more or less uncertain. The three typical groups of this class are each designated by a subclass number and the several cases collected under the subclasses.

Subclass 5.1—Main fuel inlet with supplementary high-speed jet.—Two fuel inlets located at different points in an air venturi, one supplying all or practically all the fuel for low speed and the other coming into action as the flow rate increases, is the combination illustrated on page 237 (1,079,634, Nov. 25, 1913, Burchartz), in which also the accelerating cup is incorporated.

Subclass 5.2—Main fuel inlets with supplementary idling jet.—Addition to a single plain fixed fuel and air inlet, of a second fuel inlet above the throttle, arranged to act on closed throttle when the main jet is supplying inadequate fuel or none at all, is illustrated on page 238 (995,074, June 13, 1911, McCarthy).

Subclass 5.3—Fuel standpipe.—Instead of fixing the proportions by manual adjustment or location of two fuel inlets for two limiting flow rates, as in the previous cases, without any definite effort to secure graduation between them, the regular graduation may be the main object. Usually the method employed here is that designated as the standpipe, illustrated in its multitubular form on page 239 (1,093,343, Apr. 14, 1914, McAndrews), which is only a step in this direction, as it has but three fuel tubes with outlets at different levels in the air passage, therefore constituting what might be called a three-point adjustment. It is evident that with this arrangement the correct proportions could be secured for steady flow at least for three separate flow rates. Still more tubes, or passages formed in the walls of a tube with outlets at different heights, the highest one being above the throttle, are found on page 239 (1,148,378, July 27, 1915, Grapin & Grapin). Evidently any number could be so fixed; the more there are, however, the smaller each becomes, the less easy it is to secure the several separate manual adjustments, and the more the tendency for the fuel in the standpipes to surge and oscillate on pulsating flow, which, of course, defeats the purpose. The fact that this sort of disposition of multiple fuel inlets, dissimilarly placed, is usually associated with variable air inlets is an indication of difficulty with or objections to a single air inlet.

J. G. BURCKHARTZ.
CARBURETER.
APPLICATION FILED JULY 26, 1912.

1,079,634. Patented Nov. 25, 1913.

Fig. 1

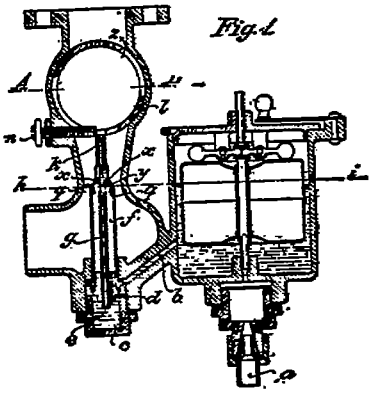

Fig. 2.

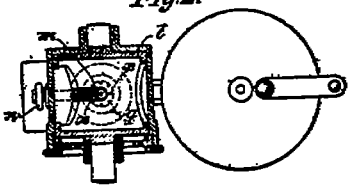

Witnesses:
E. L. Reinhold
J. M. Stephenson

Inventor
Johann G. Burckhartz
per F. Dietzsch
Attorney.

T. J. McCARTHY
PRIMING ATTACHMENT FOR CARBURETERS
APPLICATION FILED MAY 21, 1910

995,074. Patented June 13, 1911.

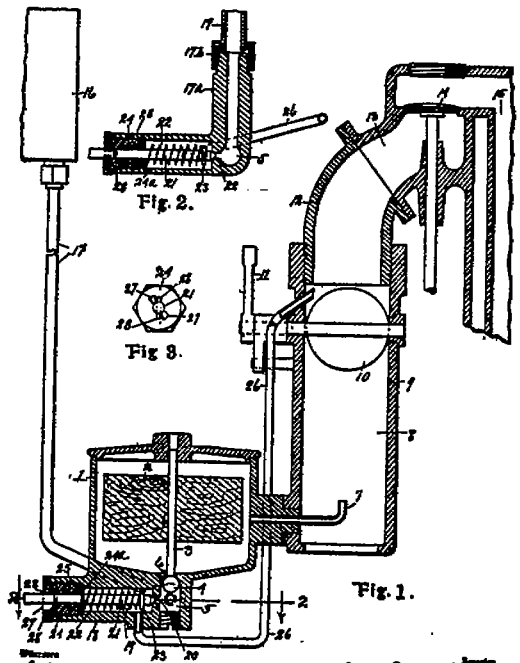

Witnesses
O. R. Bugyopp
J. E. Hamlett

Thomas J. McCarthy
Inventor
E. W. Keller
Attorney

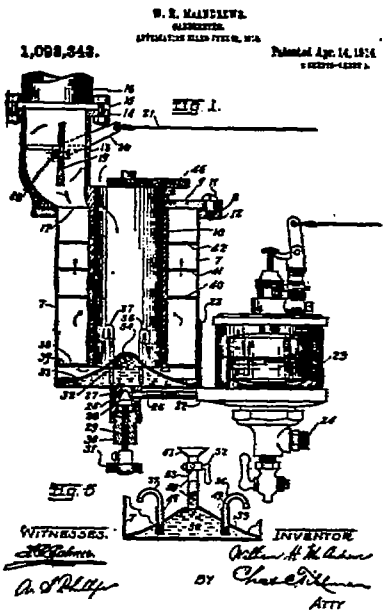
1,093,343.
Fig. 1.
Fig. 5
WITNESSES.
INVENTOR.
BY
ATTY

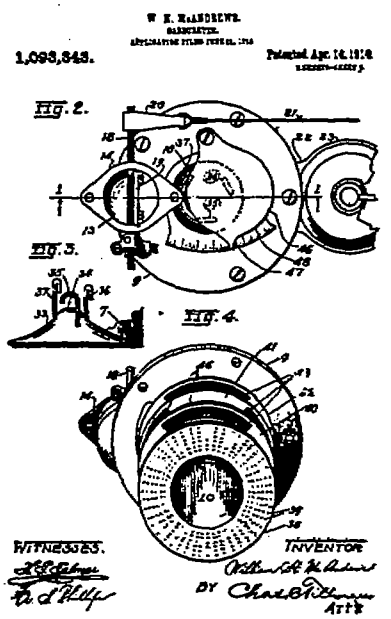
1,093,343.
Fig. 2.
Fig. 3.
Fig. 4.
WITNESSES.
INVENTOR
BY
ATT'Y

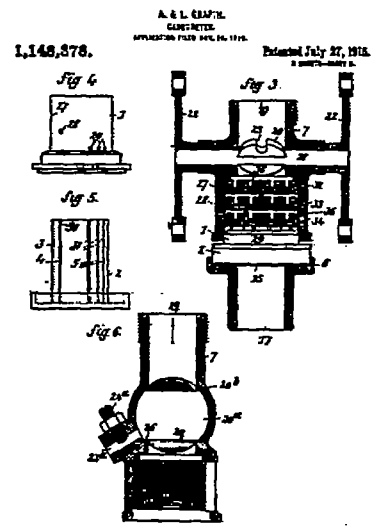
1,145,378.
Fig 4
Fig 3
Fig 5.
Fig 6

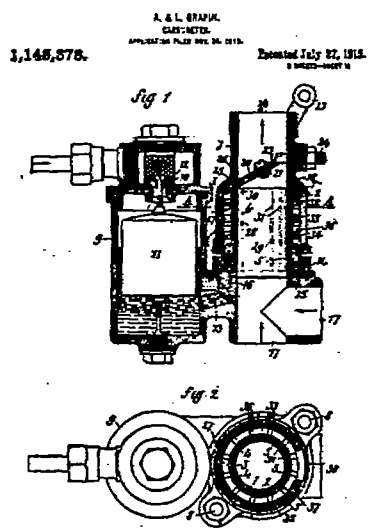
1,145,378.
Fig 1
Fig 2

Class 6, carburetors, proportioning flow, aspirating, multiple fuel and multiple air inlets, both fixed.—That suitable dispositions of differently situated multiple fuel and air inlets offers possibilities of compensated proportioning flow is clear from the preceding examination of several air inlets for a single fuel and of several fuel inlets for a single air and along similar lines. However, still other and new possibilities are opened up in the double and multiple carburetor in which two or more complete carburetors may be brought into action successively as the flow rates increase, any one being limited to flow-rate variations not great enough to seriously affect the proportionality.

In the case on page 244 (1,097,165, May 19, 1914, Bucherer), two fuel inlets are provided—one supplied from a constant level cup open to the atmosphere, the other forms another such cup, fed from the first, in which the surface pressure is less, being open to the air and to the venturi air throat, so that the surface pressure decreases with increasing air-flow rates, and the level becomes higher than in the float cup. The sum of the fuel flow from these two will clearly not increase with air flow as fast as that from an ordinary jet, but it is a question whether or not the compensation is correct in amount. Aspiration from the fuel inlet with equalized float-chamber pressure is promoted by a second small air inlet directly crossing it. This is a case of compensation by positioning of inlets.

Subclass 6.1, double carburetor, progressive, by throttle.—Naturally two fuel inlets, each in its own air inlet, can be proportioned or adjusted to give correct proportions for at least two different flow rates, and this is the idea of the double carburetor, which may have different flow characteristics and proportions at other rates, depending on the form of each of the two elementary carburetors. If the engine speed be constant, as with governor-controlled stationary engines, then there is a more or less definite relation between the flow rate and the throttle position; but this is not the case with variable speed engines, such as the automobile class, where for any given throttle position the speed and flow rate may vary most widely. The propeller loaded engine, marine or aero, falls between. These facts are important, because in the first group there would be some reason for associating the successive action of the separate parts of multiple carburetors with the throttle because of the flow-rate relation; but in the second class there is no rational basis for such a control, the vacuum as a direct result of flow rate replacing the throttle in validity. In fact, no matter what the type of engine as to speed and load variations vacuum change is a direct function of flow-rate change, and is a more rational and fundamental actuating means than the throttle.

The cases of this subclass of two carburetors brought into action successively by the throttle must be regarded as excluded from application to variable speed engines where speed is as much a matter of resisting torque as of throttle position. A small complete carburetor, suitable in size for idling with the throttle closed, associated with a larger single fixed inlet carburetor for normal working, the idler remaining in action, constitutes one special form of this double carburetor throttle, and is controlled is illustrated on page 245. (1,002,699,

Sept. 5, 1911, Jouffret & Renee.) This can be regarded as somewhat more legitimate than the double form with throttle connected so the smaller one is advanced, shown on page 246. (1,011,694, Dec. 12, 1911, Winton.) Two independent carburetors, a smaller one acting as idler for low speed, are combined in such a way that the outlet of the idler is led to a separate branched header within the main header of a vertical multicylinder engine, the idler branches ending directly at the inlet valves on page 245. (1,069,502, Aug. 5, 1913, Wadsworth.) The object of this is to prevent the dilution of the small idling charges by the large volume of whatever may be in the main header, and yet not interfere with combined action of both when conditions are favorable. Closed throttle leaves only the idler in action; wide-open throttle permits both to act.

Subclass 6.2, multiple carburetor, progressive by throttle.—Such cases as fall under this class are the same as the last except as to number of elements, page 247 (759,624, May 10, 1904, MacMulkin), showing five, brought into action successively by the rotation of a barrel throttle having five slots of different length. A peculiar form of fuel inlet passage is here shown, consisting of small slots cut in a tapered plug screwed down tight on a tapered seat. Six elements, each with one fixed fuel, having fixed primary and secondary air, with a rotating plate throttle, are shown on page 247. (948,612, Feb. 8, 1910, Krause.) In multiple carburetors, the succession of which is throttle controlled, speed changes may build up flow rates that are excessively high for a given throttle opening, and thereby bring about just the sort of undesirable enrichment that the multiplicity is supposed to avoid. To avoid this a vacuum-controlled choke or automatic secondary speed-governing throttle may be introduced, as on page 248. (1,018,262, Feb. 20, 1912, Neal.) Should the engine speed become excessive for a given exposure of jets, the spring-resisted piston valve moves across the mixture outlet and closes it enough to induce the vacuum on, and hence the flow through the passages. The effect is similar to a vacuum control of succession. Three, one leading above the throttle and the second with an accelerating cup, are provided on pages 248 and 249 (1,158,589, Nov. 2, 1915, Thurot), but involving throttle-controlled succession.

Subclass 6.3, double carburetor, progressive by vacuum.—Vacuum being a more rational basis than throttle movement for controlling succession, this class is more interesting, and the form page 250 (1,176,627, Mar. 21, 1916, Ver Planck) being so recent, is doubly interesting as an illustration. Here two fixed fuel inlets are each located in separate venturi throats of different size and fed from overflow types of level cups, the overflow from one feeding the other. The smaller acts for low-flow rates, and can evidently be made to give correct proportions for at least one rate. When the vacuum exceeds a predetermined value a check valve controlling the outlet of the second opens and establishes flow through the larger passage, which has a second venturi throat, the vacuum at which is immediately brought into action and used to hold the check valve from chattering by a pipe connection to a piston attached to the check valve. Provision for hot and cold air and a multitubular form of mixer are also provided. At some higher speed or flow rate the

proportions can evidently be made correct again, but the proportionality in the intermediate ranges depends on the characteristics of the form of each single carburetor independently, which must be the same as for those of class 3.

Subclass 6.4, multiple carburetor, progressive by vacuum.—As the number of separate complete carburetors is increased, the proportionality can be made quite correct at a larger number of points in the flow range, and this is the object of the cases of this subclass, with, of course, an increase in complication and number of parts as an offset. Five separate venturis, with single fixed air and fuel passages are provided on page 251 (871,320, Nov. 19, 1907, Bollee), brought into action by one piston valve vacuum actuated against its spring. Six fixed fuel inlets, each in a fixed cylindrical air passage, are brought in successively by the vacuum lift of a series of differently weighted outlet check valves, gravity loaded, as shown on page 252. (1,072,733, Sept. 9, 1913, Kaltenbach.)

To cause as high a flow rate to take place through a single fixed passage as through a series of separate passages with vacuum-controlled outlets will involve a very much greater vacuum at the outlet, and therefore reduce the absolute pressure at which the engine receives its charge, with corresponding reduction of volumetric efficiency and power. This valuable feature of such a series of passages, vacuum controlled at their outlets, is also characteristic of all that class of carburetors that have automatic air-inlet valve for any number of passages, including a single one, so these have something in common with the class here under discussion.

Subclass 6.5—Mixed flow.—As pointed out in dealing with mixed flow in carburetors with a single fuel inlet, this valuable direct compensation is applicable to arrangements of more than one fuel inlet. The first case of this class, that on page 253 (907,953, Dec. 29, 1908, Bavery), provides two main fuel inlets, both at the same point in the throat of an air venturi, and a third above the throttle. One of the main fuel inlets is of the plain type that in a fixed air passage tends to flow excessively fast with reference to the air at increasing flow rates. The other compensates by its mixed-flow action at high rates and plain flow at lower rates, being fed from a chamber having an atmospheric vent to which fuel from the float chamber is supplied through a calibrated opening. This auxiliary fuel chamber also has a tube leading to the third inlet above the throttle and acts in addition as an accelerating cup. On closed throttle there is no flow through either of the main inlets because of inadequate air-throat vacuum, the accelerating cup is full, and the idling jet in action. Opening of the throttle throws this jet out and brings in both the main jets, that supplied from the accelerating cup gradually decreasing in flow as the fuel head supplied to it falls in the accelerating cup and faster later on as air enters as well. A somewhat similar action results with the slightly different structure on pages 253 and 254 (998,123, July 18, 1911, Scaife), which also has three fuel inlets, one above the throttle, and two main, which merge into one at their tops. An accelerating cup feeds the idling jet and the second main or mixed-flow jet, but instead of securing its fuel directly from the float chamber the fuel passes through the same measuring passage

as supplies the main jet. Accordingly there is a possibility that both main nozzles may act as mixed-flow passages at high-flow rates. On page 254 (1,002,700, Sept. 5, 1911, Joffret & Renee) there are but two fuel inlets, one main and one idling above the throttle, the main acting as a mixed-flow passage at high rates. This is also the case on page 254 (1,063,148, May 27, 1913, Anderson), but in the latter case the idling jet is fed not from the accelerating cup but from a separate connection to the float chamber. The feeding of main mixed-flow jet and idling jet from an accelerating cup having a single float-chamber connection, is illustrated on page 255 (1,090,047, Mar. 10, 1914, Goudard & Muenesson), and a case of accelerating cup alternately feeding fuel to the idling jet or mixed-flow air to the main jet is shown on page 255 (1,109,974, Sept. 8, 1914, Fagard). Incorporation of the alternate-flow passages directly in the fuel nozzle is shown on page 255 (1,170,348, Feb. 1, 1916, Schüttler), where the idling jet gets fuel from the same calibrated float-chamber orifice as feeds the main jet and some air from the main jet hole on closed throttle. On open throttle the flow reverses; at the idling end of the nozzle fuel enters the main air at the Venturi throat, being modified by air received from the idling end of the nozzle, escaping with the fuel. A similar case of incorporation of all passages in a sort of multiple-walled and orificed-fuel nozzle is that on pages 255 and 256 (1,170,416, Feb. 1, 1916, Claudel), where a vertical nozzle is set for parallel flow in a bend of a fixed air passage, so that at various heights the vacuum is different and by reason of holes and multiple walls a compensating mixed flow is accomplished.

One main and one idling fuel inlet fed from a single connection to the float chamber, to which the accelerating cup is also attached, is shown on page 256 (1,175,536, Mar. 14, 1916, Longuemare), the fuel-measuring orifice being located before the whole. Here the accelerating cup alternately acts as auxiliary fuel feed, on opening the throttle, and as mixed-flow air passage, to correct the excess-flow tendencies of the main jet at high rates. A case of incorporation of the two fuel passages and a mixed flow in the fuel valve stem is shown on page 256 (1,183,019, May 16, 1916, McGuire), where the lower and manually adjustable fuel inlet serves for low flow rates and the higher one is brought into action at higher rates, with mixed-flow compensation from the hole through the stem fitted with an adjusting valve.

Subclass 6.6, fuel standpipe.—The bringing into action of successively higher fixed fuel inlets as the vacuum increases, associated with more than one fixed air inlet, without mixed flow, is another means of compensation already examined for single air inlets. On pages 257 and 258 (927,211, July 6, 1909, Bennett), a single fuel standpipe has a vertical row of perforations and is open at the top to the atmosphere. At low flow rates only the lower fuel holes act, all the rest feeding air into the main stream, but at high rates the fuel issues from more and higher holes and from lower holes at higher rates, because of the head increase. The free top air acts as a compensator to some degree, because without it the fuel would certainly rise higher and flow faster.

M. BUCHERER.
SPRAY CARBURETER.

1,097,165. Patented May 19, 1914.

Fig. 3.

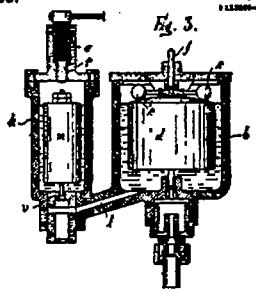

Fig. 4

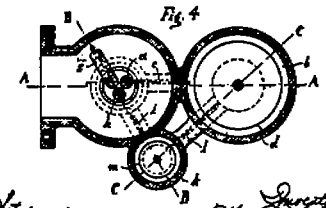

M. BUCHERER.
SPRAY CARBURETER.

1,097,165. Patented May 19, 1914.

Fig. 1.

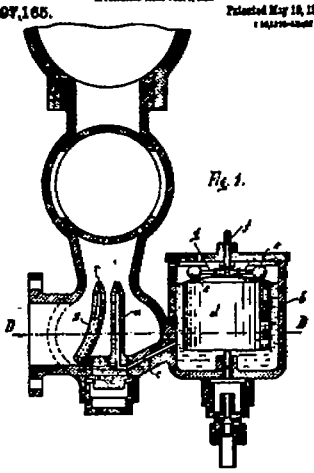

M. BUCHERER.
SPRAY CARBURETER.

1,097,165. Patented May 19, 1914.

Fig. 2

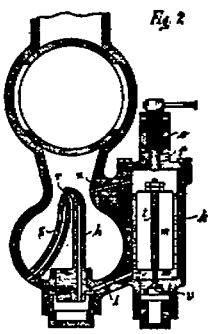

M. BUCHERER.
SPRAY CARBURETER.

1,097,165. Patented May 19, 1914.

Fig. 2

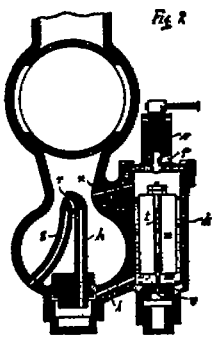

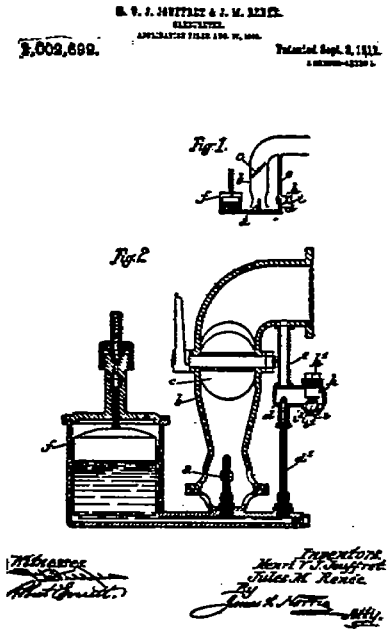
1,002,699.
Patented Sept. 5, 1911.
Fig. 1.
Fig. 2
Witnesses
Inventors
Henri T. J. Jouffret
Jules M. Renée.
By
Atty.

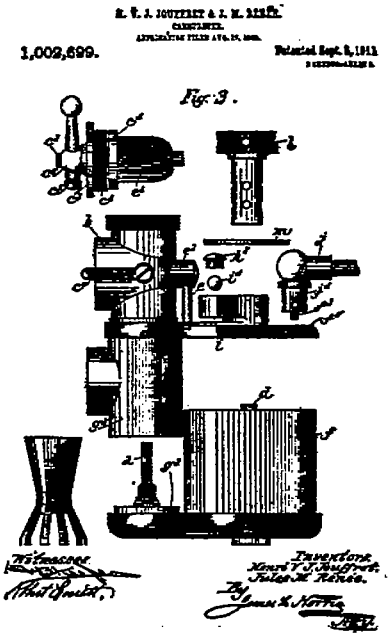
1,002,699.
Patented Sept. 5, 1911
Fig. 3.
Witnesses
Inventors
Henri T. J. Jouffret
Jules M. Renée.
By
Atty.

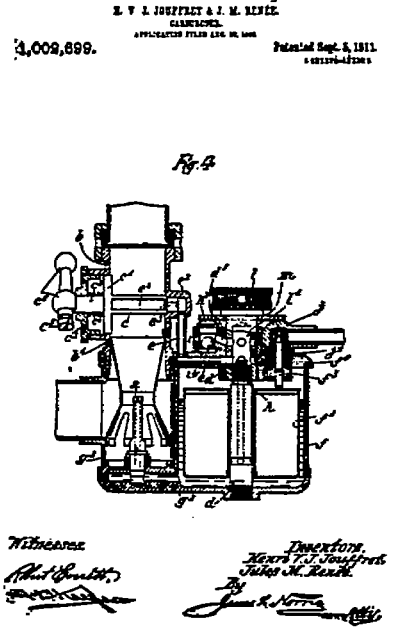
1,002,699.
Patented Sept. 5, 1911.
Fig. 4
Witnesses
Inventors
Henri T. J. Jouffret
Jules M. Renée.
By
Atty.

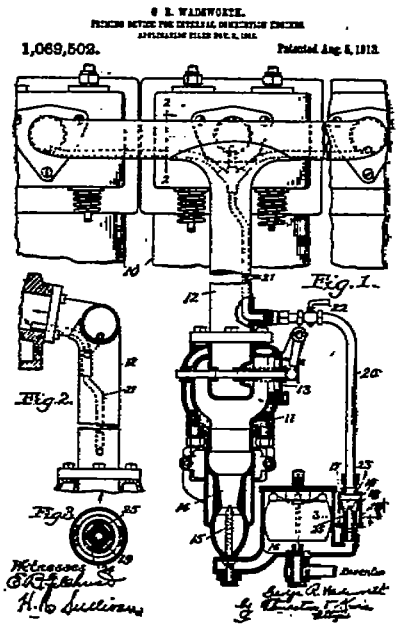
1,069,502.
Patented Aug. 5, 1913.
Fig. 1.
Fig. 2.
Fig. 3.
Witnesses

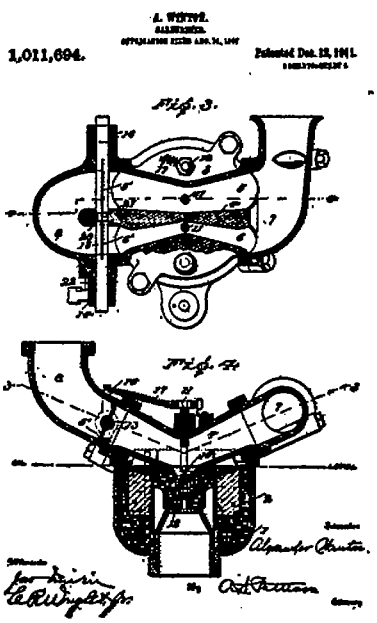
1,011,694.
Fig. 3.
Fig. 4.

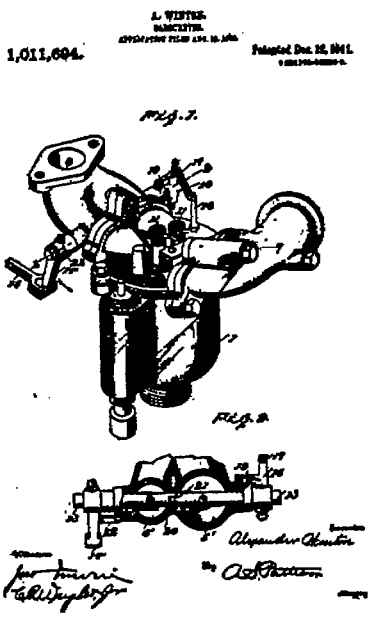
1,011,694.
Fig. 7.
Fig. 8.

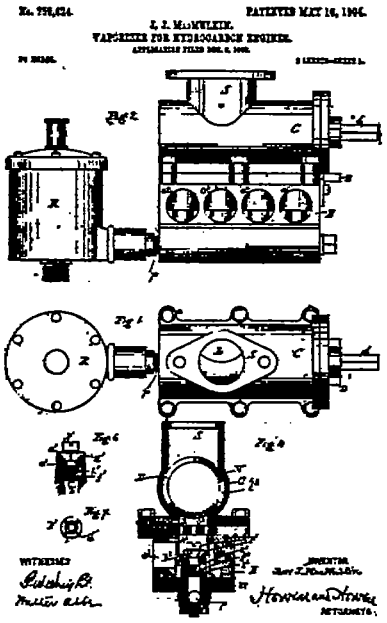
PATENTED MAY 16, 1905.
J. J. McMULLEN.
VAPORIZER FOR HYDROCARBON ENGINES.

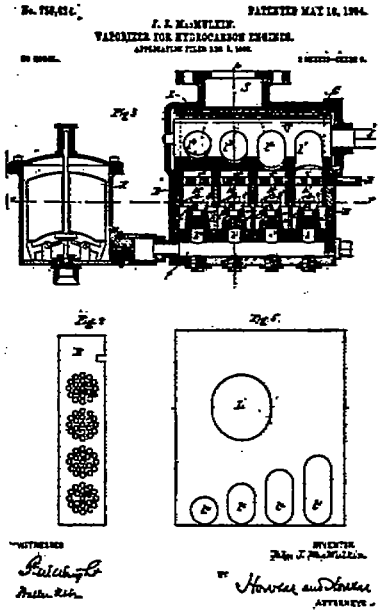
PATENTED MAY 16, 1905.
J. J. McMULLEN.
VAPORIZER FOR HYDROCARBON ENGINES.

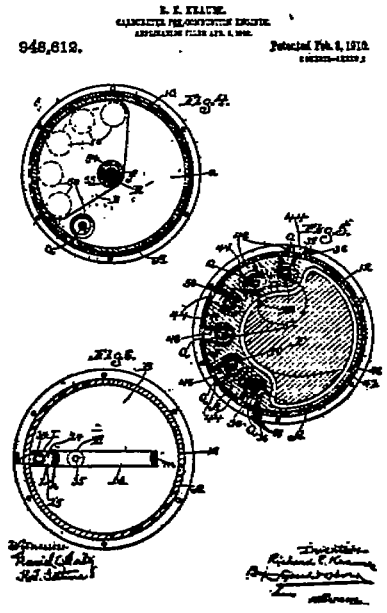
R. E. KRAUSE.
948,612.
Patented Feb. 8, 1910.

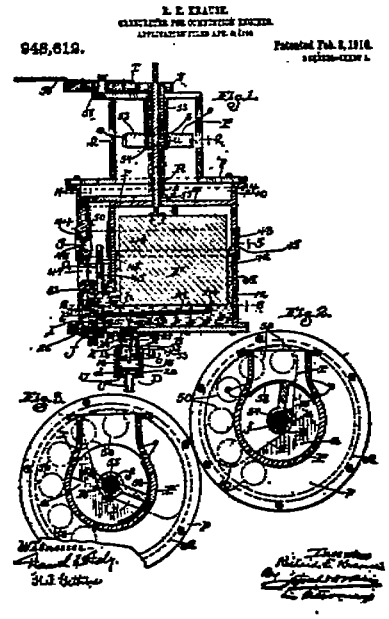
R. E. KRAUSE.
948,612.
Patented Feb. 8, 1910.

H. A. NEAL.
CARBURETER FOR INTERNAL COMBUSTION ENGINES.
APPLICATION FILED MAR. 7, 1910.

1,018,962. Patented Feb. 20, 1912.

Fig. 1.

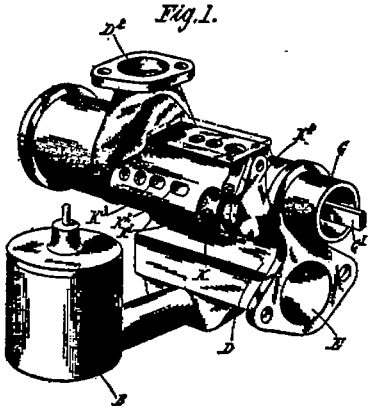

Witnesses: Milton Otterbey, C. Hershman

Inventor: H. A. Neal, by Fritz Thomas Atty.

H. A. NEAL.
CARBURETER FOR INTERNAL COMBUSTION ENGINES.
APPLICATION FILED MAR. 7, 1910.

1,018,962. Patented Feb. 20, 1912.

Fig. 2

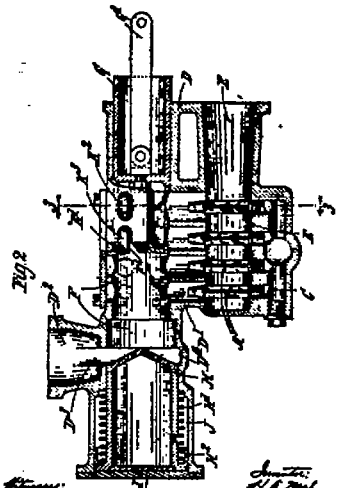

Witnesses: Milton Otterbey, C. Hershman

Inventor: H. A. Neal, by Fritz Thomas Atty.

H. A. NEAL.
CARBURETER FOR INTERNAL COMBUSTION ENGINES.
APPLICATION FILED MAR. 7, 1910.

1,018,962. Patented Feb. 20, 1912.

Fig. 3.

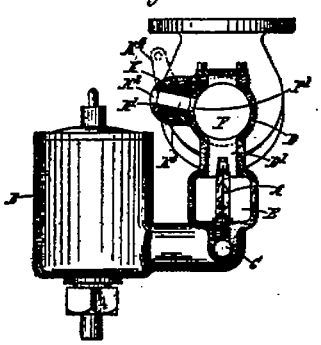

Witnesses: Milton Otterbey, C. Hershman

Inventor: H. A. Neal, by Fritz Thomas Atty.

J. L. T. THEBOT.
CARBURETER.
APPLICATION FILED DEC. 20, 1913.

1,158,589. Patented Nov. 2, 1915.

Fig. 1.

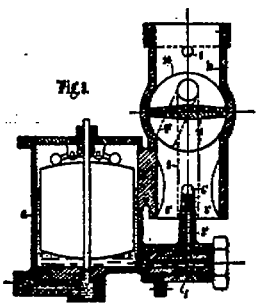

WITNESSES: E. G. Cooper, Samuel Wilkin

INVENTOR: Jean L. T. Thebot, by R. Rimpfel, ATTORNEY

J. L. T. THUROT.
CARBURETER.
APPLICATION FILED DEC. 19, 1913.

1,158,589. Patented Nov. 2, 1915.
2 SHEETS—SHEET 1.

Fig. 1.

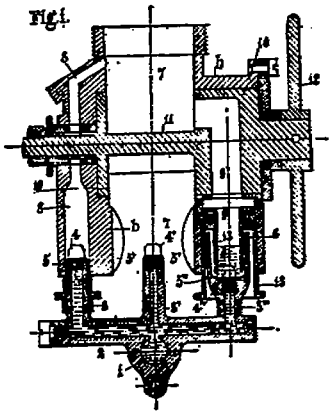

Fig. 2.

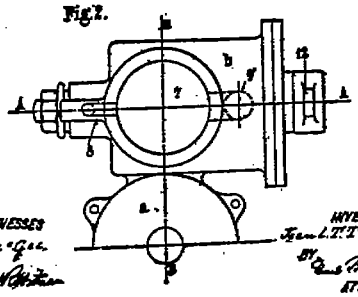

WITNESSES
C. G. De Geer
Selmer W. Hatten

INVENTOR
Jean L. T. Thurot
BY Chas. Rimpfle
ATTORNEY

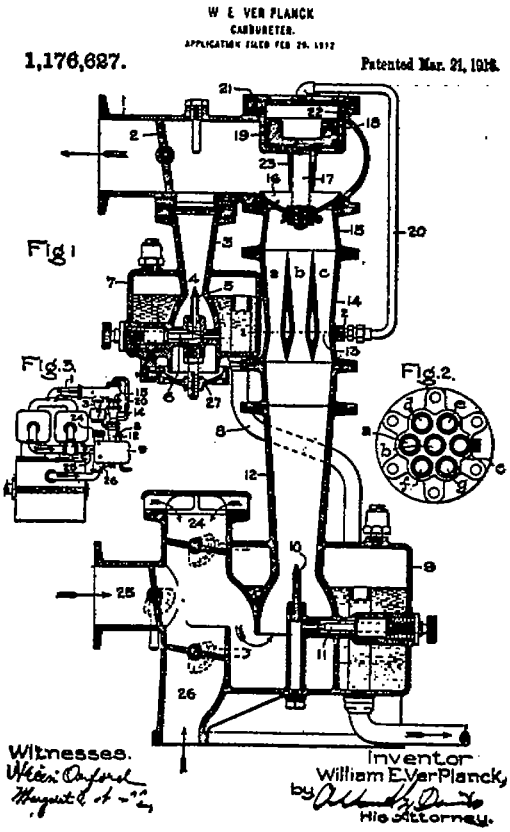
W. E. VER PLANCK
CARBURETER.
1,176,627.
Patented Mar. 21, 1916.
Fig 1
Fig. 3
Fig. 2.
Witnesses.
Inventor
William E. VerPlanck,
by
His Attorney.

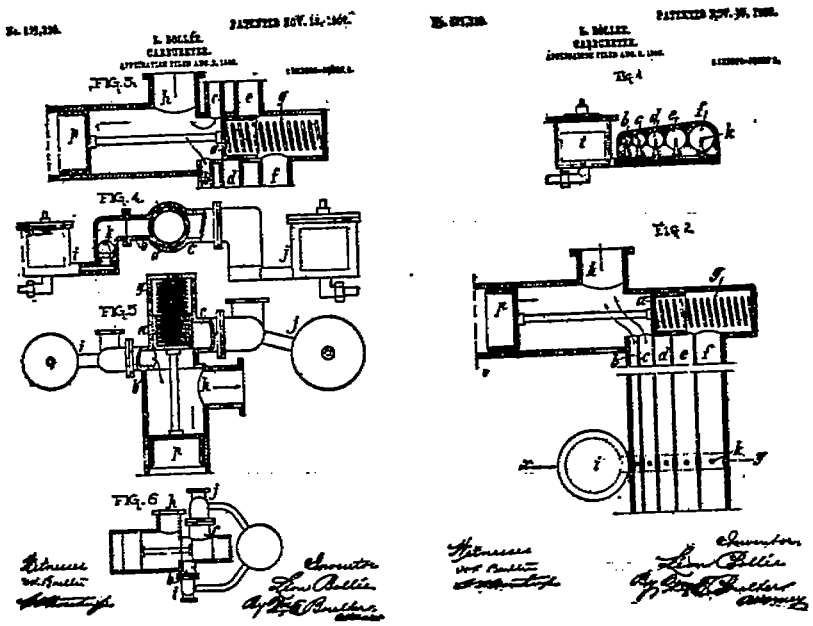
FIG. 3.
FIG. 4.
FIG. 5
FIG. 6
Fig. 4
Fig. 2

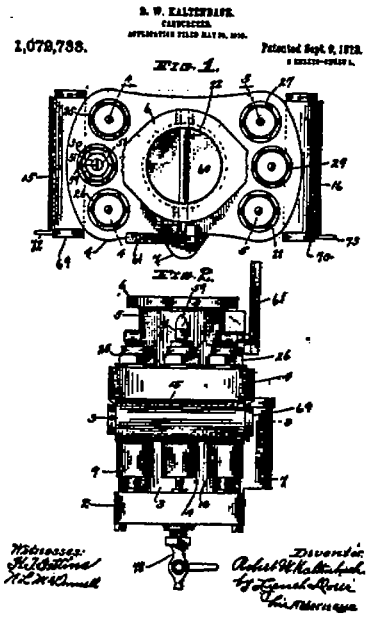
1,072,738.
Fig. 1.
Fig. 2.

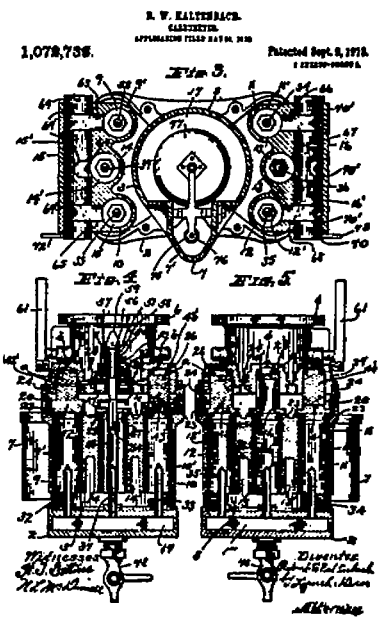
1,072,738.
Fig. 3.
Fig. 4.
Fig. 5.

F. RAVERAT.

907,953. Patented Dec. 29, 1908.

FIG. 4

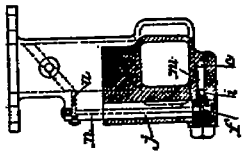

FIG. 3

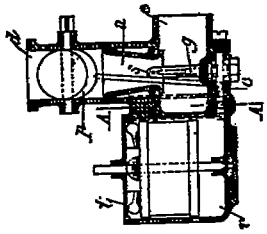

WITNESSES
W. P. Rand

INVENTOR
Francis Raveraz

F. RAVERAT.

907,953. Patented Dec. 29, 1908.

FIG. 1

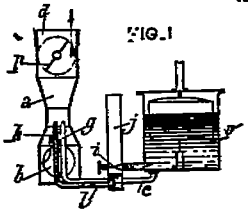

FIG. 2

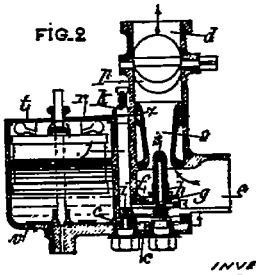

WITNESSES
W. P. Rand

INVENTOR
Francis Raveraz

F. RAVERAT.

907,953. Patented Dec. 29, 1908.

FIG. 6

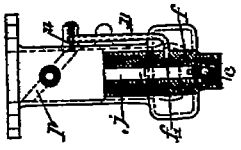

FIG. 5

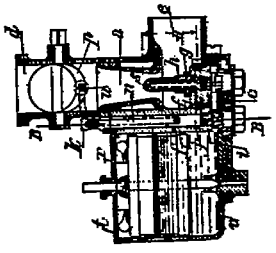

WITNESSES
W. P. Rand

INVENTOR
Francis Raveraz

A. J. SCALITZ.

998,123. Patented July 18, 1911.

Fig. 8.

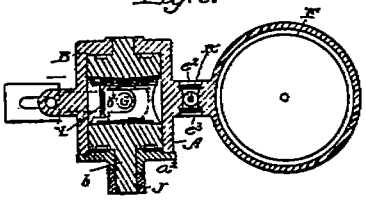

Fig. 9

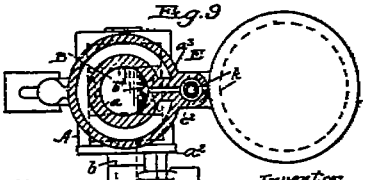

Witnesses
E. R. Fitchett
H. B. Sullivan

Inventor
Arthur J. Scalitz
by Thomson & Kiser
Attorneys

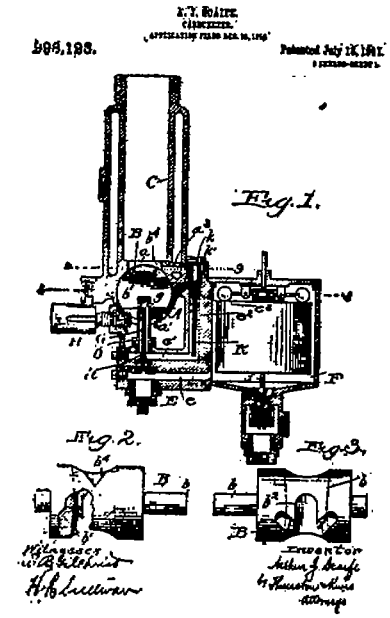
996,123.
Fig. 1.
Fig. 2.
Fig. 3.

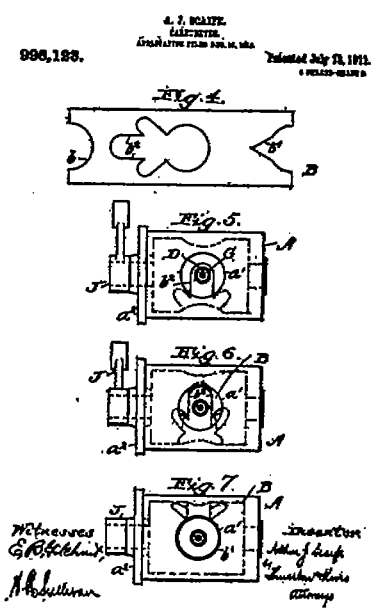
996,123.
Fig. 4.
Fig. 5.
Fig. 6.
Fig. 7.

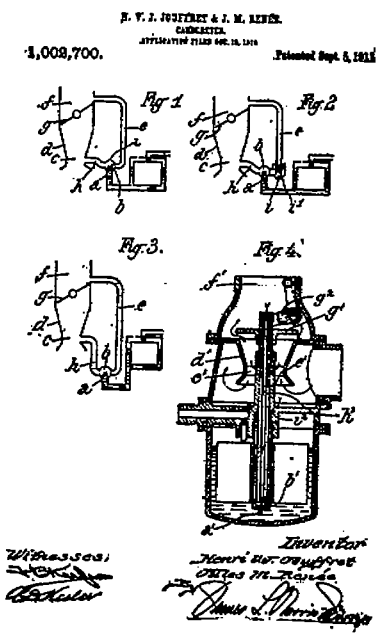
1,002,700.
Fig 1
Fig 2
Fig. 3.
Fig. 4.

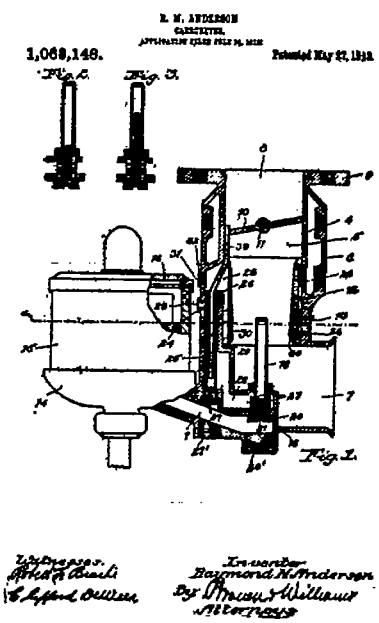
1,068,148.
Fig. 1.

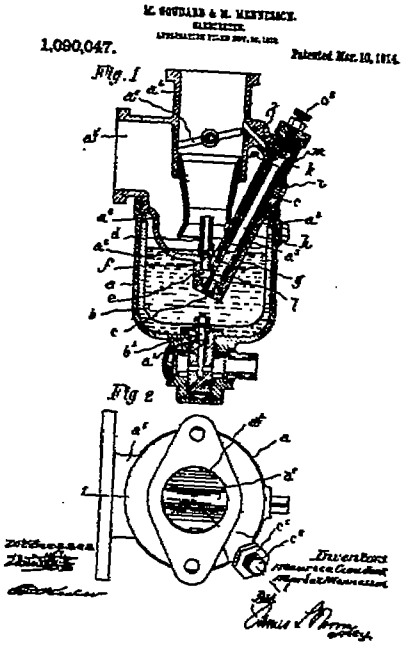
1,090,047.
Fig. 1
Fig. 2

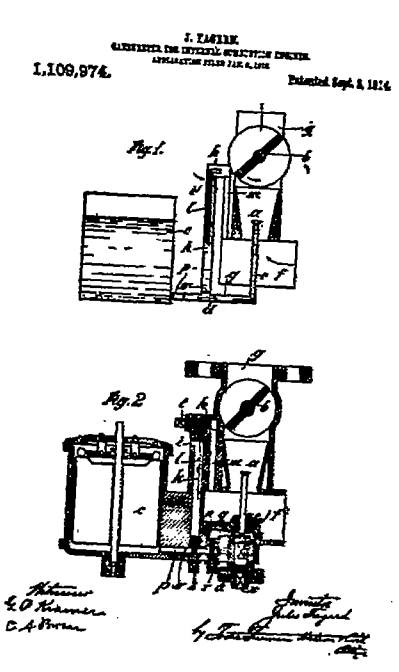
1,109,974.
Fig. 1.
Fig. 2

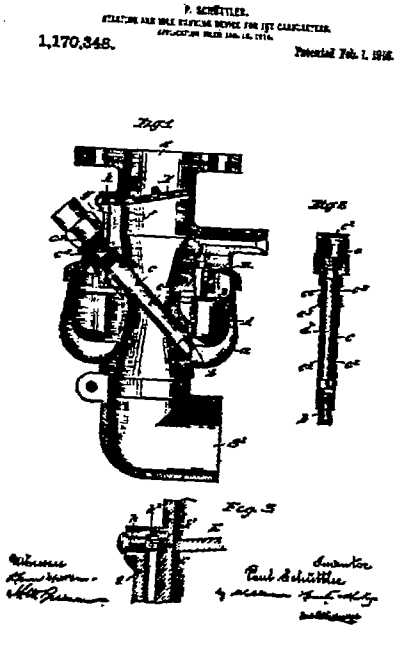
1,170,348.
Fig. 1
Fig. 3

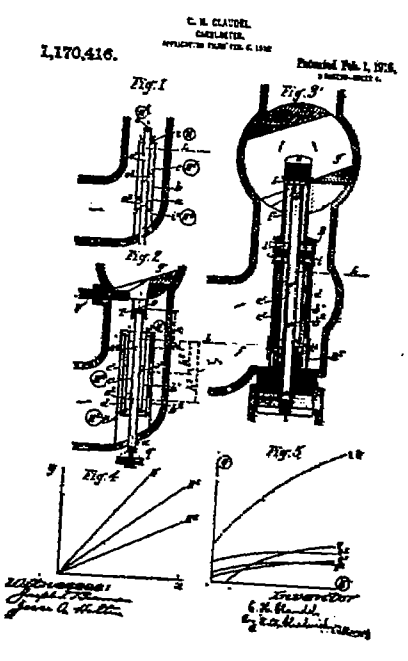
1,170,416.
Fig. 1
Fig. 2
Fig. 3
Fig. 4
Fig. 5

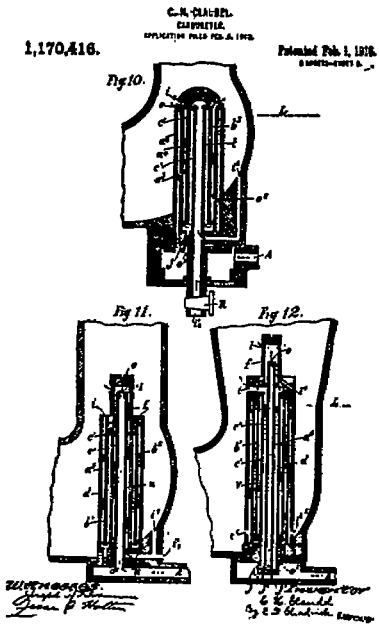
1,170,416.
Fig 10.
Fig 11.
Fig 12.

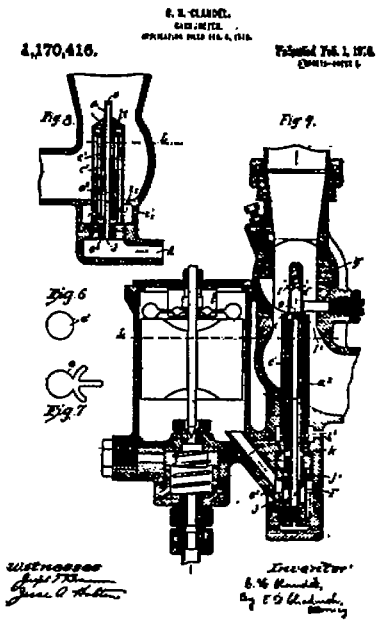
1,170,416.
Fig 8.
Fig 9.
Fig 6
Fig 7

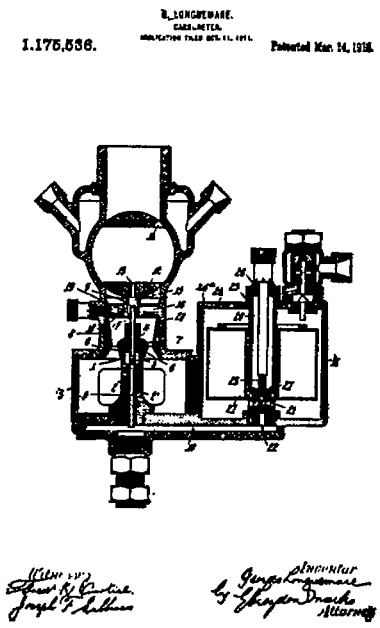
1,175,536.

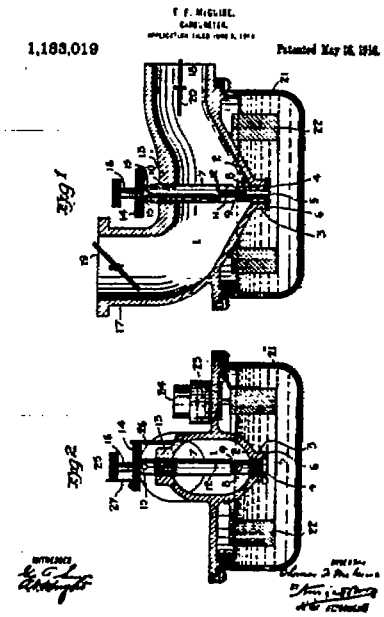
1,183,019
Fig 1
Fig 2

A. C. BENNETT.
CARBURETER.
APPLICATION FILED JULY 10, 1908.

927,211. Patented July 6, 1909.
SHEETS-SHEET 1.

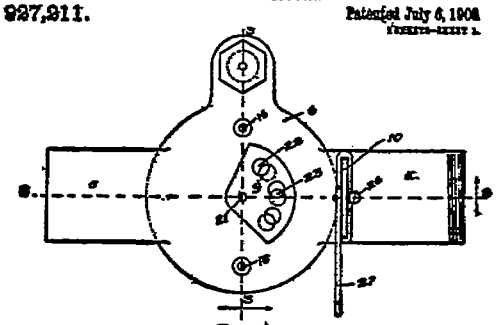

Fig. 1.

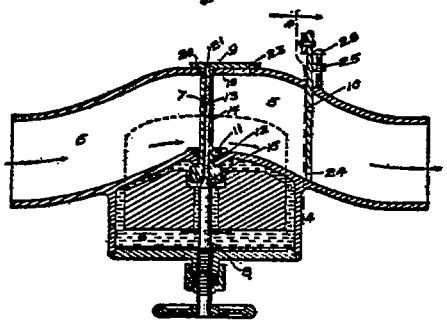

Fig. 2

WITNESSES:
Chas. F. Rehm
H. J. Kelem

INVENTOR.
Ashley C. Bennett

A. C. BENNETT.
CARBURETER.
APPLICATION FILED JULY 19, 1909.

937,211. Patented July 6, 1909.
SHEETS—SHEET 2.

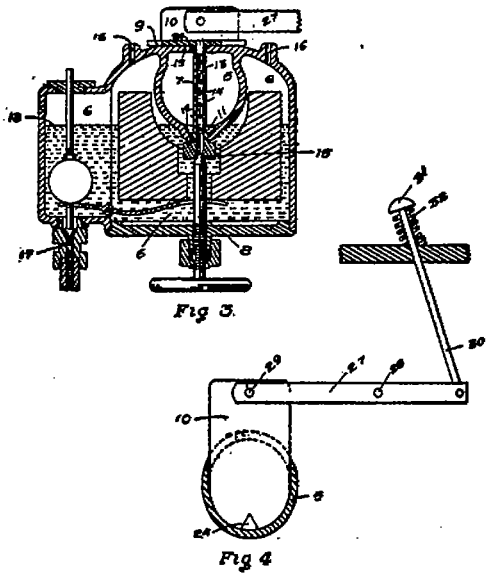

Fig 3.

Fig 4

WITNESSES:
Alex F. Wilson
H. S. Nelson

INVENTOR
Ashley C. Bennett

Class 7—Carburetors, proportioning flow, aspirating, single fixed fuel inlet, single air inlet with regulating valve.—This is the first of the classes in which compensation by changing the flow areas themselves is employed, instead of relying on variations in fuel flow head with fixed passages, or on the number of such fixed inlets brought into action at different flow rates by reason of their location or disposition. In this particular subclass the fuel inlet is single and fixed and the air inlet is varied in such a way as to control the air entrance resistance and its velocity at the fuel inlet, so that the vacuum at that point shall be just sufficient to induce a fuel flow in constant proportion to the air. This vacuum should, of course, be less, other things being equal, than what it would be with a fixed unvarying nonregulated air inlet. Each of the typical groups of forms or means of actuation of the air inlet regulating valve constitutes a subclass, but certain cases overlapping as to subclasses or not directly falling in any one are grouped under the general class heading.

One example of this is the arrangement on page 264 (864,111, Aug. 20, 1907, Sickles), where an externally driven fan draws air through the carburetor and delivers a mixture at a pressure greater than atmosphere, which should yield an increased power output, the air entering through an inlet valve controlled by an outlet throttle, not a primary control for variable speed engines. Another such double featured case is that on page 246 (911,692, Feb. 9, 1909, Andrew), where the air is drawn through a multiported automatic piston valve, passing the fuel inlet by way of an automatically adjusting air throat, which for low rate flows sends all the air across the fuel inlet and for high flow rates by-passes some as a compensation. Another more pronounced automatically variable throat to nozzle relation, with high flow rate by-pass of air previously admitted through a throttle-controlled air valve, is that on pages 264 and 265. (935,833, Oct. 5, 1909, Bassford.) A sort of combination of automatic air inlet and one that is throttle controlled is that on page 265 (1,062,688, May 27, 1913, Bastian), where the air enters through an automatic valve resisted by the throttle cam, and another such is that on page 265 (1,101,736, June 30, 1914, Gillett), having an automatic swing type of valve within the body of a plug valve that is a combined throttle and throttle-controlled air inlet, the automatic controlling the direction of the air that has entered, and its velocity at the fuel inlet.

Subclass 7.1—Fuel inlet between throttle-controlled air valve and throttle.—The direct object of this plan is adjustment of air-entrance resistance so that the vacuum at the fuel inlet shall be maintained proper for constantly proportionate flow, a simple and practical sort of adjustment but not appropriately connected to a throttle for variable speed engines because of the complete lack of dependence of flow rate on throttle position in this case, however much closer the relation may be for engines of the constant-speed class.

On page 266 (771,492, Oct. 4, 1904, Parmenter), a fuel inlet—in fact, a pair of them—is located between a pair of damper valves locked together, one acting as air inlet and the other as throttle, the linkage being adjustable to control to a limited degree their relative rate of movement, which must be properly graduated. On page 267 (789,749, May 16, 1905, Maxwell), the plug valve, with one edge acting as air valve and the other as throttle, has the inlet in the

middle between them, an arrangement that limits the adjustment and graduation of relative movement. A cylindrical chamber with an adjustable air inlet in one end and a slot in its side acts by rotation as both air valve and throttle, the fuel inlet being between, as shown on page 267. (794,927, July 18, 1905, Cashman & Cushman.) A sliding air valve linked to a damper throttle, pages 267 and 268 (932,465, Aug. 31, 1909, Haas), is fitted with a hollow-stem needle-valved fuel inlet between them, the hollow stem acting as a lifting tube for low-flow rates as its upper end communicates with a passage above the throttle. Another such lifting tube with an accelerating cup is shown in the combined air inlet and throttle plug type on page 268 (1,006,387, Oct. 17, 1911, Kreis, jr.)

A slide valve, acting as throttle and air valve, is shown on page 269 (1,062,333, May 20, 1913, Higgins), the relative adjustment of their two areas being accomplished by varying the lateral width of one port of the air inlet and using another port unmodified, which closes as the adjusted one opens under the longitudinal movement of the slide as it closes the throttle. A great variety of such linkages is found, showing a more or less keen appreciation of the importance of the proper relative adjustment with reference to the throttle, both for slide valves, balanced piston and poppet valves, and dampers of all sorts, some of them involving the use of cams. In the form page 269 (1,095,101, Apr. 28, 1914, Gardner) a pair of cam grooves cause a disk air valve and a similar throttle to move axially in opposite directions with reference to a tapered air throat, around which a series of fuel inlets is disposed. One of the most recent of these cases applies the pair of linked dampers of figure 140 to a triple inlet—one for gasoline, one for kerosene, and one for water, similarly disposed and each with its own level chamber, as shown on page 270. (1,150,202, Aug. 17, 1915, Johnston & Longenecker.) The use of a double-tapered sleeve, with two contractions moving in a cylindrical shell past a solid plug, and a central fuel-inlet plug, as combined air inlet and throttle, is shown on page 270 (1,151,286, Aug. 24, 1915, Rowell), the relative area changes being accomplished by the shape angle or curvature of the tapers of the two plugs with reference to their matching annular sleeves.

Subclass 7.2—fuel inlet at or before air valve which acts as throttle.—Placing the fuel inlet jet at or before the air inlet orifice relieves it of practically all the vacuum due to entrance resistance, and makes fuel flow depend solely, or substantially so, on variations of air velocity past it, as such velocity produces a pressure depression equivalent to the air velocity head. In such a case the air valve is itself the throttle. Of course air velocity has no prime relation to the throttle or air valve opening except for constant speed engines, so as in other cases where the throttle is the means of actuating whatever air or fuel regulating valves may be used, the application is of lesser if of any value whatever, to variable-speed engines. A balanced form of air valve, acting as throttle and so formed as to keep the air flow concentrated past the fuel nozzle which is located in front in a region of practically no vacuum except that due to air velocity, is shown on page 271. (815,712, Mar. 20, 1906, Johnston.) The valve is a piston with a tapered central hole in which the nozzle stands, and with radial ports throughout its length. It moves in a

cylindrical partition between the air supply and the mixing chamber. It keeps the air flow moving across the jet, at first almost entirely radially and later part radially and part longitudinally. In the form, page 271 (816,846, Apr. 3, 1906, Charron & Girardot), the fuel inlet is located just below the plane of action of an iris throttle, similar to the photographic shutter. A pair of oppositely moving slides with the fuel valve located midway in their plane of action is shown on page 272. (868,251, Oct. 15, 1907, Bollee.) A single damper, arranged with a fuel inlet at one side of the passage, is made to serve as on page 273 (1,080,118, Dec. 2, 1913, Monosmith), and the same thing with the damper bent and used with one water and one fuel inlet differently situated so the fuel flow has a lead on that of the water, is shown on page 273. (1,108,181, Aug. 25, 1914, Kane.) Use of a helical spring, the coils of which may touch or on extension be drawn apart, is used as both air inlet and throttle valve, as shown on page 274 (1,117,233, Nov. 17, 1914, Parker), the fuel inlet being inside the coil, and the lower portion serving as air inlet and the upper part as throttle. A pair of cams geared together with the fuel inlet midway is shown on page 274. (1,143,227, June 15, 1915, Prescott.)

Subclass 7.3—Fuel inlet between automatic air valve and throttle.—Air entering through an automatic air valve will not produce as great an increase in entrance resistance or in static mixing chamber vacuum with increase of flow as if it entered through a fixed inlet, and this not only tends to produce a higher density of charge than is otherwise possible but it may be used as a means of compensation for correcting proportions. Of course, velocity head vacuum at the fuel inlet is the same with automatic valved as with fixed inlets, so whatever compensating effect is produced must be through a modification of the entrance resistance. The way in which the entrance resistance varies with flow depends primarily on the form of the automatic valve and on its manner of loading.

A spring-loaded piston type of automatic air inlet is shown on page 275 (759,396, May 10, 1904, Rutenber), the air passing down and impinging on a plate surrounding the fuel inlet and mushrooming sideways, so whatever velocity head vacuum there is will probably be negative, though small, and fuel flow is controlled primarily by the vacuum produced by the valve, which will be determined by the spring and the shape of the ports. On page 275 (794,502, July 11, 1905, Hennebutte), air enters through an annular check-valve spring loaded, passes downward, sweeping at the bottom a two-ported fuel inlet on which it exerts some positive velocity head effect, and a hand-adjusted by-pass permits this to be least manually controlled. Mixing baffles are also employed beyond the jet. A swing check-valve spring loaded is illustrated on page 275 (796,723, Aug. 8, 1905, Hewitt), with the fuel inlet in the center of a straight cylindrical chamber. A similar spring-loaded swing check that does not completely close the inlet and therefore exerts no entrance resistance at very low flow rates is shown on pages 275 and 276. (806,434, Dec. 5, 1905, Schebler.) The air flows downward to a bend into which the fuel nozzle projects, the air velocity head acting negatively but uncertainly because of the eddy currents and initial direction given to the air by the spring valve. Another swing check, itself a spring, and

arranged in a straight passage to deflect the air away from the fuel inlet at first and then as flow increases allowing the air to sweep the fuel inlet, is shown on page 276 (831,547, Sept. 25, 1906, Dunlop & Dunlop), so that at low-flow rates the vacuum is all due to entrance resistance, but at high rate, as this increases but little with such a valve, the air velocity head vacuum is brought into action to induce sufficient flow. Another attempt to secure velocity head control by form is shown on page 276 (947,712, Jan. 25, 1910, Henricks), which places the jet in a bend supplied with air through a spring check with a fixed by-pass. Four fuel inlets, similarly placed and swept by the air from a single spring air check, are shown on page 277 (986,700, Mar. 14, 1911, Fogel), the four acting, so far as proportionality is concerned, no differently than one. While designed primarily to operate on compressed air, the form shown on page 278 (1,039,229, Sept. 24, 1912, Walker) is especially well adapted to air at atmospheric pressure and will have the same proportionality characteristics with reference to flow, whatever the air pressure, except, of course, as density changes may enter as variables. The supply air acting directly on the free fuel surface before passing the spring-loaded air valve produces a differential pressure that will result in fuel flow even without the location of the jet in an air throat as shown. Of course, this arrangement naturally tends toward enrichment. A graduated series of five annular air checks is shown on page 276 (1,124,918, Jan. 12, 1915, Krause) to build up sufficient vacuum with flow increase to secure correct proportioning at at least as many points as there are rings for steady flow.

Subclass 7.4—fuel inlet swept by air entering through automatic valve.—Unless the seating resistance of automatic air inlet valves increases with the flow rate as they open, the entrance resistance will not produce a sufficient vacuum at the fuel inlet to draw in a proportionate amount of fuel, and in such cases there must be a resort to velocity head assistance. Therefore, when the fuel inlet is beyond the automatic air valve there must be a properly graduated increasing air valve seating load or a graduated air velocity head action at the jet or both. If the fuel inlet be located in the opening of the automatic air valve so as to get only velocity head vacuum and no entrance resistance vacuum, then as a fixed opening builds up vacuum too fast for proportionate fuel flow, a yielding automatic valve may be a proper compensator, but it likewise must have a variable load because otherwise the velocity would not increase at all as the opening and the flow increased. Therefore the question of location of the fuel inlet with reference to the entering air stream is intimately bound up with that of automatic air valve loading, and the cases of this subclass are concerned primarily with locations of fuel inlet that will be swept by the entering air and be influenced by its velocity head to a considerable degree, being correspondingly less dependent on the valve loading alone.

On page 279 (783,902, Feb. 28, 1905, Shipman) the automatic valve is a spring loaded check form, directing all the air across the fuel inlet which receives none of the entrance resistance vacuum, being located constantly at the variable throat of a rectangular venturi. A precisely similar effect in a round annular venturi is pro-

duced by the spring loaded core acting as an air valve, but not seating tight, on page 279. (799,232, Sept. 12, 1905, Gosse.) A series of swing checks are used on pages 279 and 280 (800,647, Oct. 3, 1905, Hatcher), the fuel inlet being inside when the valves are closed and at the throat or outside of it when they are open. A fixed circular row of fuel inlets is located within a lifting ring, acting as a gravity loaded automatic air valve on page 280 (859,719, July 9, 1907, Anderson), and always outside as soon as the valve lifts. Quite the same arrangement, but with a spring loaded annular air valve is shown on page 280. (875,716, Jan. 7, 1908, Longuemare.) Two air streams acting as one, one fixed and the other entering through an annular gravity loaded automatic valve, are both directed by walls across the jet, which is slightly inside, on page 280. (916,103, Mar. 23, 1909, Cartwright.) A long taper check valve in a similar long taper seat rises very steadily with flow increase and keeps a substantially constant vacuum, as shown on page 281. (924,200, June 8, 1909, Stewart.) A spring loaded piston operated gate valve is shown on page 282 (928,-828, July 20, 1909, Winton), working across the air passage in the plane of the fuel inlet which is therefore always at the most restricted and highest velocity point. The vacuum above the throttle is used to depress or close the valve. A peculiar form of swing check directing part of the air toward the jet and part around it as it opens is illustrated on page 283. (973,877, Oct. 25, 1910, Pierce.)

In figure 174 (1,000,398, Aug. 15, 1911, Gentle) the spring-loaded check lifts the fuel inlet past a baffle to keep it always in the high velocity current, and a second swinging mixture check helps to control the direction. A somewhat similar idea underlies the different construction on page 283 (1,042,982, Oct. 29, 1912, Sliger), where a fixed central air jet is also an automatic spring-loaded air valve, both streams being directed across the fuel inlet. Use of fuel inlets in the walls of a venturi throat with a tapered central plug, tending to keep the throat velocity constant, is shown on page 283 (1,052,051, Feb. 4, 1913, Grimes), as a means of compensation for the enrichment tendency that is natural for such free throats where the velocity regularly increases with flow. Of course, the satisfaction depends on the degree to which the compensation can be carried even though qualitatively the action may be in the right direction. The spring load of the plug acts counter to gravity. A pair of cam-operated gates, vacuum controlled, keeps the jet always in the entering stream and makes possible any sort of rate control on the opening, and hence of the velocity through it as flow increases, according to the construction on page 284 (1,093,901, Apr. 21, 1914, Wyman), of a tapered plug in a venturi throat, with a light spring load added to the gravity lead, is arranged to concentrate the air flow at, of course, increasing velocities with flow increases, across an annular feed inlet, the flow from which must follow the capillary law, because of filling the fuel passage with fibrous material in the form shown on page 285. (1,140,000, May 18, 1915, Rubetsky.) This is an example of the effort to control the fuel-flow law, while imposing a flow vacuum varying with flow in a manner prescribed by the other structural arrangements and dimensions. Comparatively recent form of moving venturi throat, acting as an automatic air inlet gravity loaded, is shown on page 286 (1,148,247, July 27, 1915, Moore), and

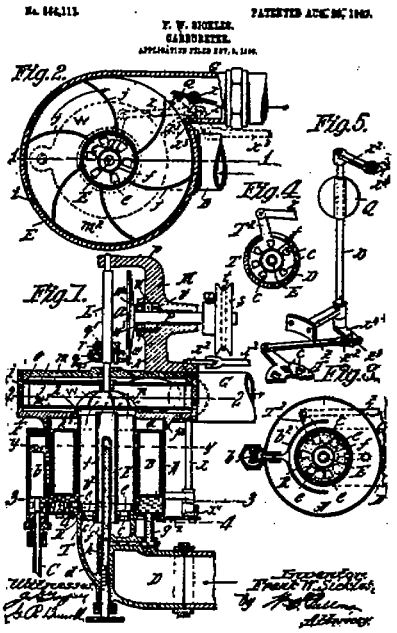
F. W. SICKLER.
CARBURETER.
Fig.2.
Fig.5.
Fig.4.
Fig.1.
Fig.3.

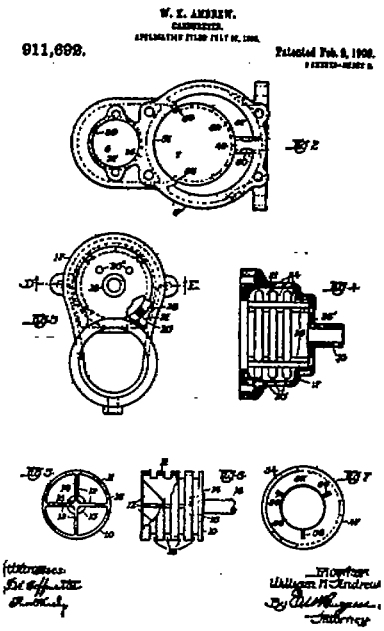
W. E. ANDREW.
CARBURETER.
911,692.
Patented Feb. 9, 1909.

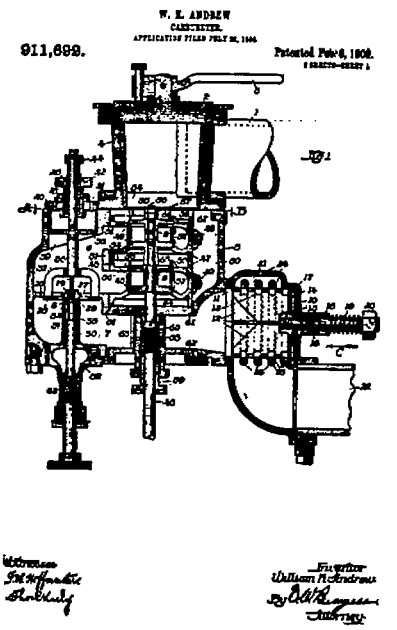
W. E. ANDREW
CARBURETER.
911,692.
Patented Feb. 9, 1909.

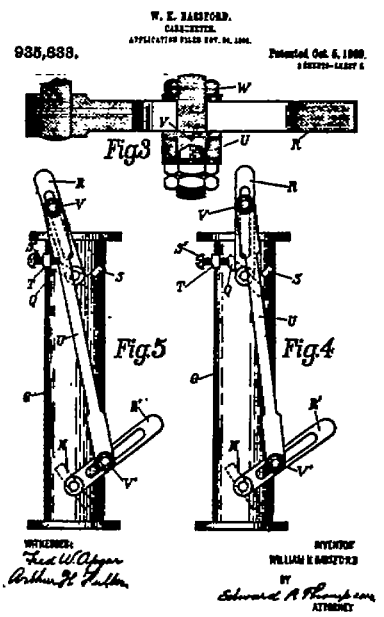
W. E. HASKFORD.
CARBURETER.
935,833.
Patented Oct. 5, 1909.
Fig3
Fig5
Fig4

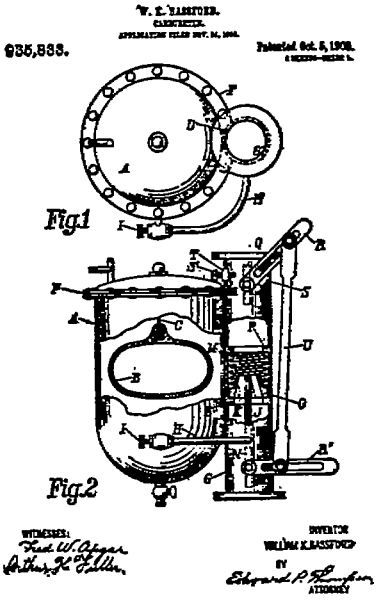
935,833.
Fig.1
Fig.2

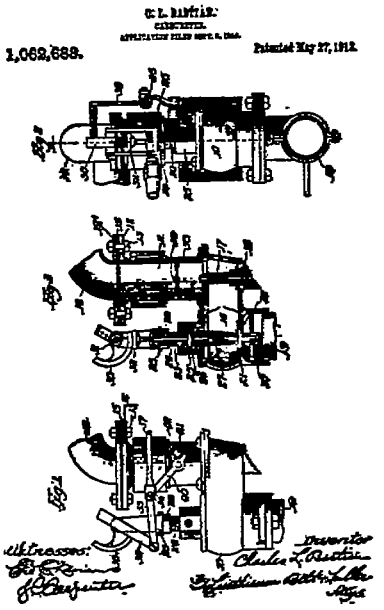
1,062,688.

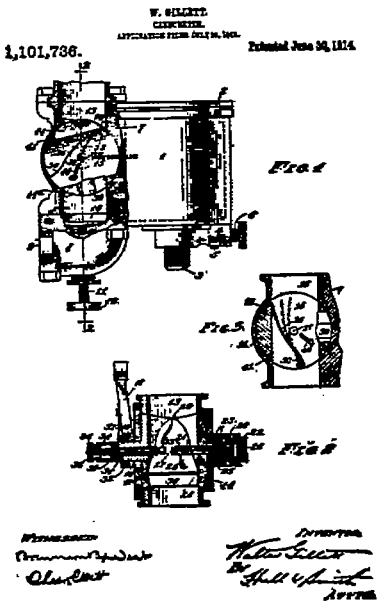
1,101,736.
Fig. 4
Fig. 5
Fig. 6

No. 771,492. PATENTED OCT 4, 1904.

C. F. PARMENTER.

CARBURETER FOR EXPLOSIVE ENGINES.

APPLICATION FILED MAR. 18, 1904.

NO MODEL. 3 SHEETS—SHEET 1.

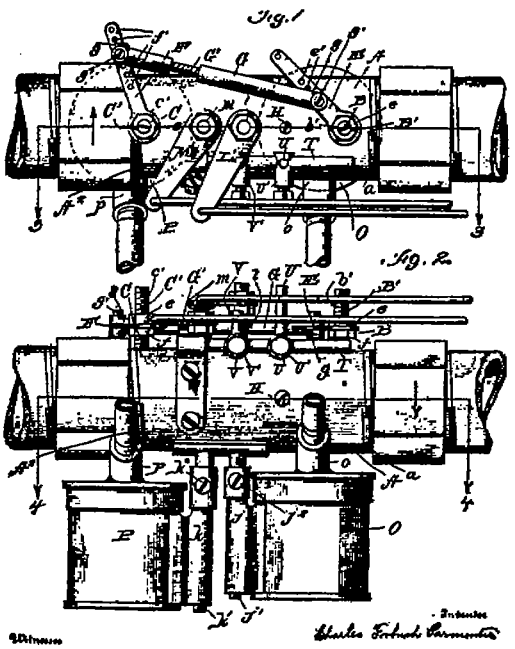

Witnesses

R. A. Brownell,

James Carl Babcock

Inventor

Charles Frederick Parmenter

by W. H. Babcock

Attorney

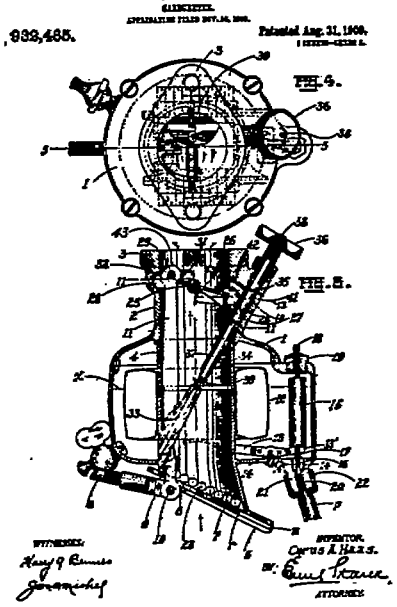
G. A. HALL.
CARBURETER.
933,485.
Patented Aug. 31, 1909.
FIG. 4.
FIG. 5.
WITNESSES:
INVENTOR.
Orrus A. Hall.
ATTORNEYS.

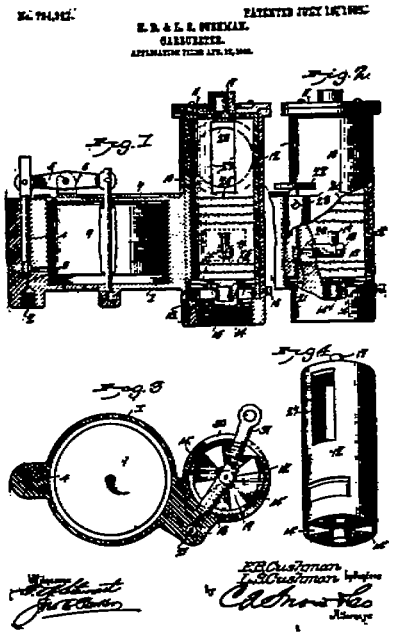
No. 784,912.
PATENTED JULY 18, 1905.
E. B. & L. S. SWEMAN.
CARBURETER.
Fig. 1
Fig. 2
Fig. 3
Fig. 4
E. B. Crustman
L. S. Crustman

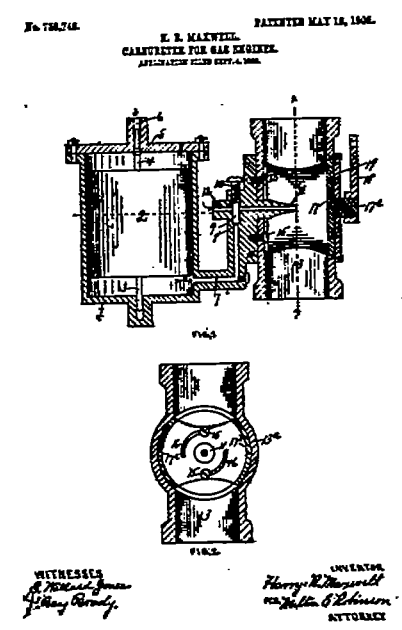
No. 758,748.
PATENTED MAY 10, 1904.
E. R. MAXWELL.
CARBURETER FOR GAS ENGINES.
FIG. 1
FIG. 2
WITNESSES:
INVENTOR.
Harry R. Maxwell
Walter C. Robinson
ATTORNEY

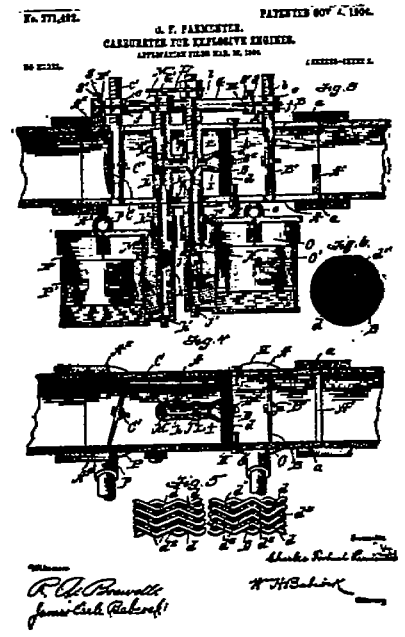
No. 771,892.
PATENTED OCT. 4, 1904.
G. P. PARMENTER.
CARBURETER FOR EXPLOSIVE ENGINES.
Fig. 3
Fig. 4
Fig. 5

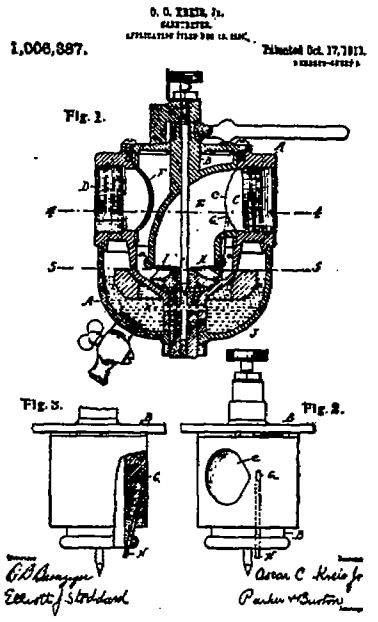
1,006,887.
Patented Oct. 17, 1911.
Fig. 1.
Fig. 3.
Fig. 2.

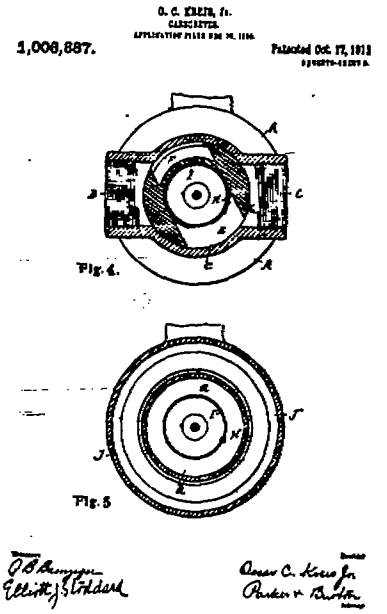
1,006,887.
Patented Oct. 17, 1911
Fig. 4.
Fig. 5

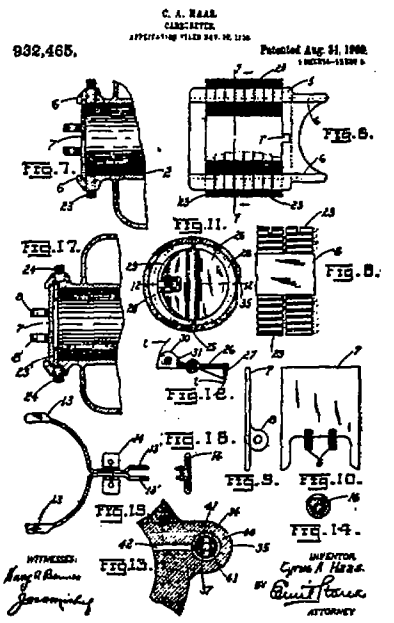
932,465.
Patented Aug. 31, 1909.
FIG. 7.
FIG. 6.
FIG. 11.
FIG. 17.
FIG. 8.
FIG. 12.
FIG. 16.
FIG. 9.
FIG. 10.
FIG. 15.
FIG. 14.
FIG. 13.
WITNESSES:
INVENTOR,
ATTORNEY

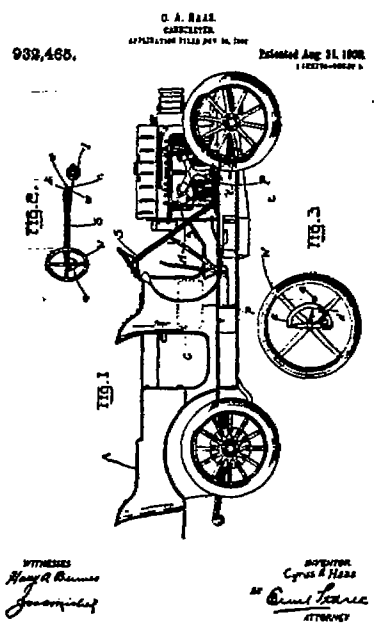
932,465.
Patented Aug. 31, 1909.
FIG. 2.
FIG. 3
FIG. 1
WITNESSES
INVENTOR,
ATTORNEY

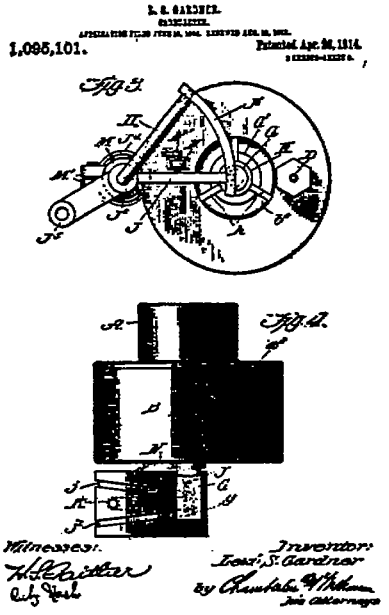
1,095,101.
Fig. 5.
Fig. 4.
Witnesses:
Inventor:
Ivan S. Gardner
by Chandlee & Wilson
his Attorneys

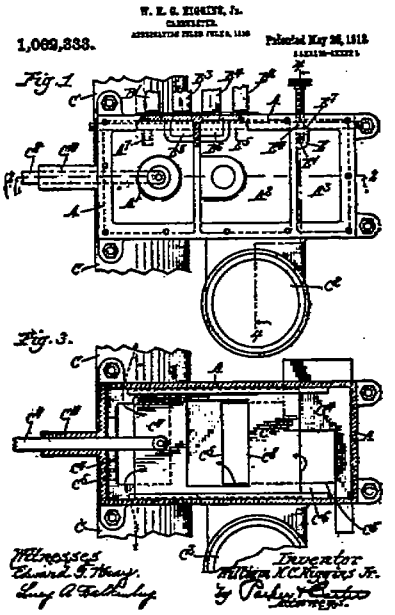
1,069,333.
Fig. 1
Fig. 3.
Witnesses
Inventor
William H. C. Higgins Jr.
by Parker & Carter
Attorneys.

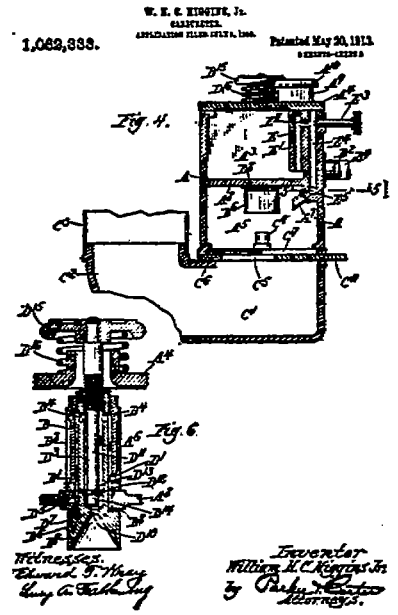
1,069,333.
Fig. 4.
Fig. 6.
Witnesses.
Inventor
William H. C. Higgins Jr.
by Parker & Carter
Attorneys.

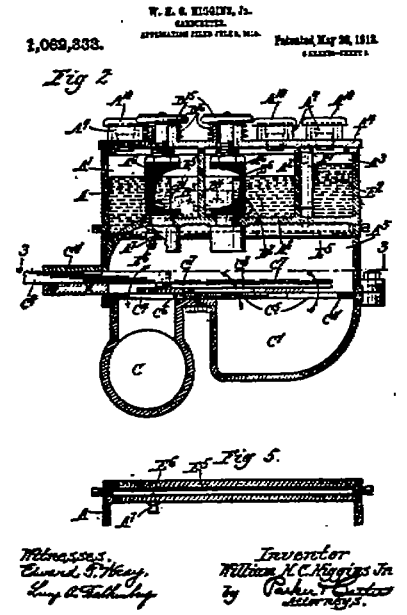
1,069,333.
Fig 2
Fig 5.
Witnesses.
Inventor
William H. C. Higgins Jr.
by Parker & Carter
Attorneys.

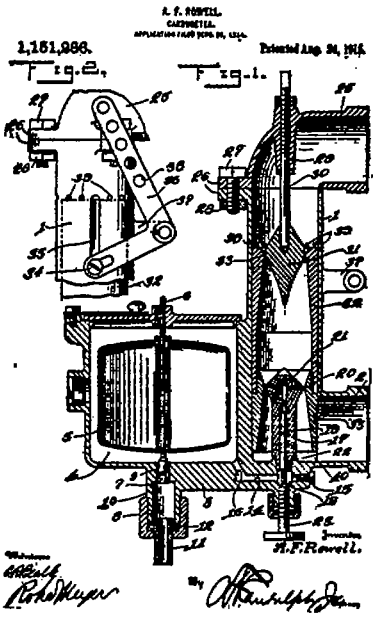
1,151,986.
Fig. 2.
Fig. 1.
H. F. Rowell.

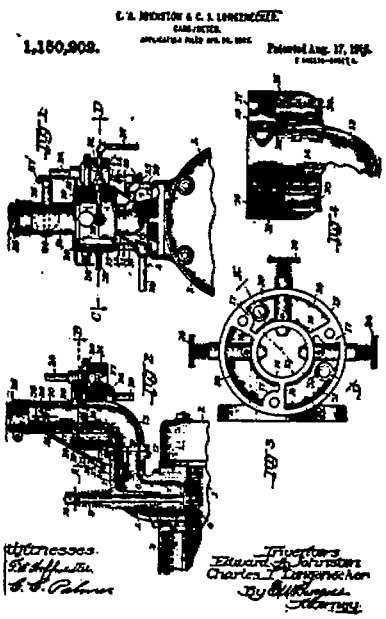
1,150,902.
Witnesses.
Inventors
Edward A. Johnston
Charles I. Longenecker

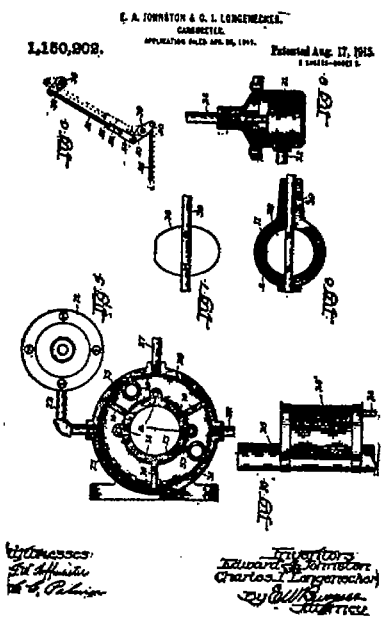
E. A. JOHNSTON & C. I. LONGENECKER.
CARBURETER.
1,150,902.
Patented Aug. 17, 1915.
Witnesses:
Inventors:
Edward A. Johnston
Charles I. Longenecker

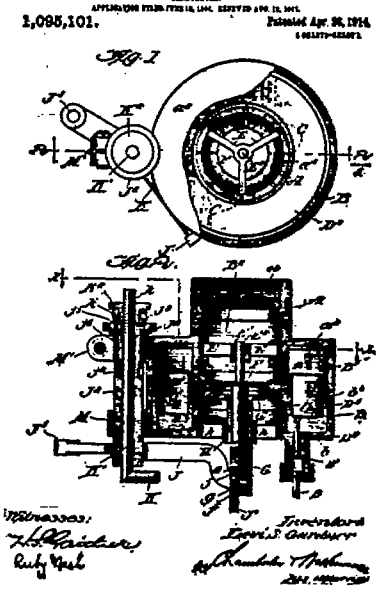
L. S. GARDNER.
CARBURETER.
1,095,101.
Patented Apr. 28, 1914.
Fig. 1
Fig. 2.
Witnesses:
Inventor:
Louis S. Gardner

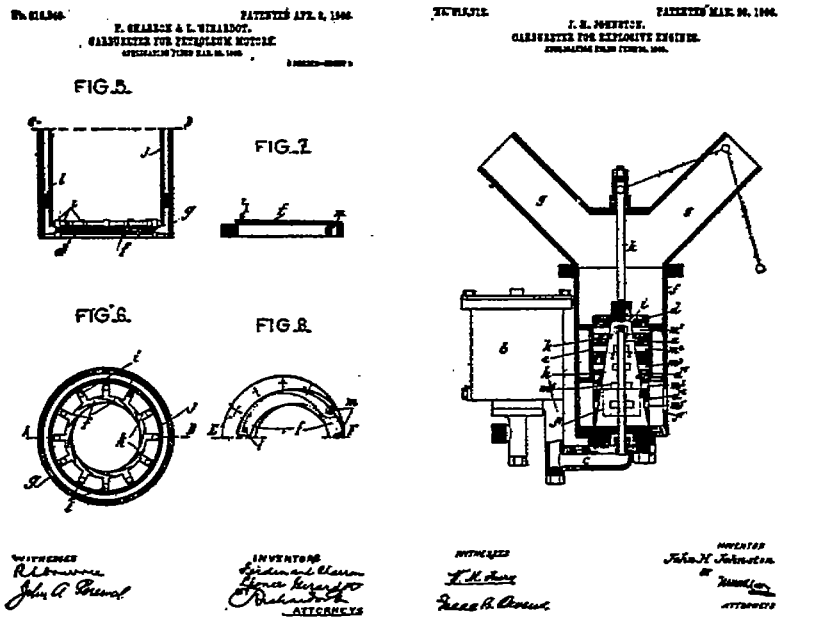
FIG.5.
FIG.7.
FIG.6.
FIG.8.
ATTORNEYS
ATTORNEYS

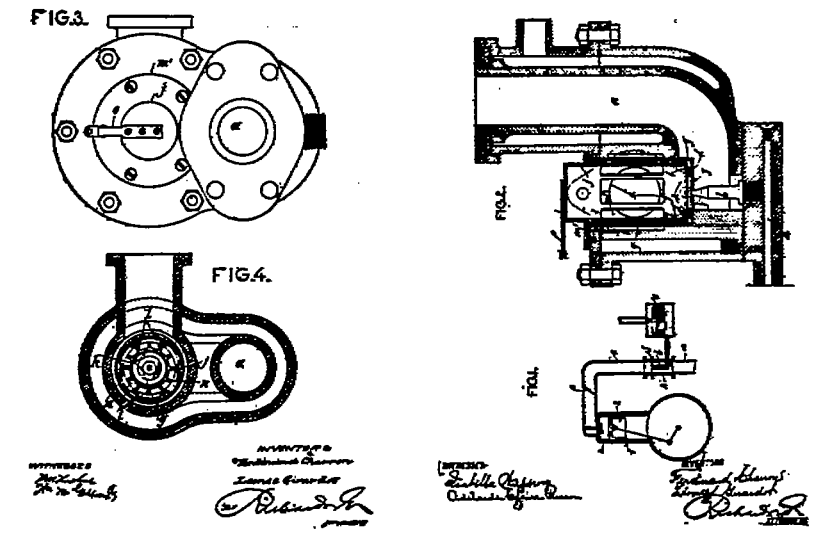
FIG.3.
FIG.4.
FIG.2.
FIG.1.

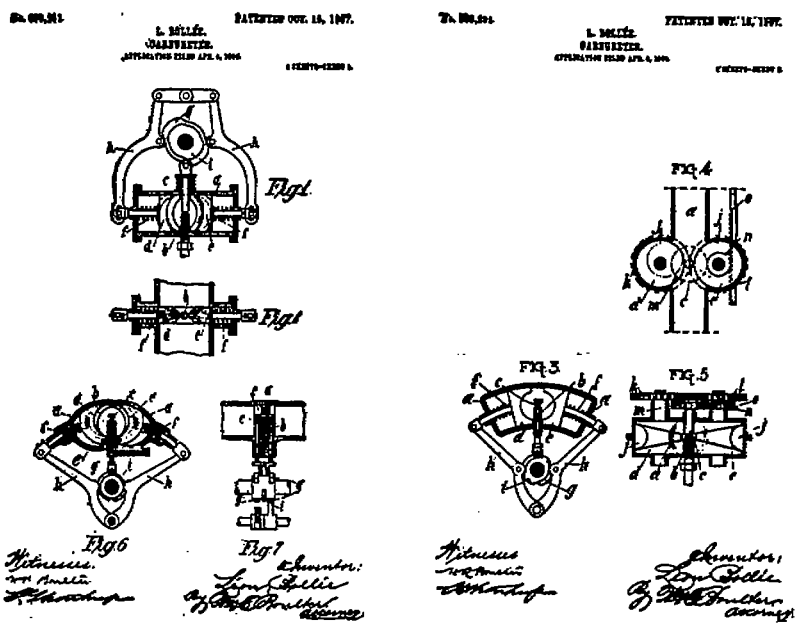
L. BÉLLÉE.
CARBURETER.
Fig. 1.
Fig. 2
Fig. 3
Fig. 4
Fig. 5
Fig. 6
Fig. 7

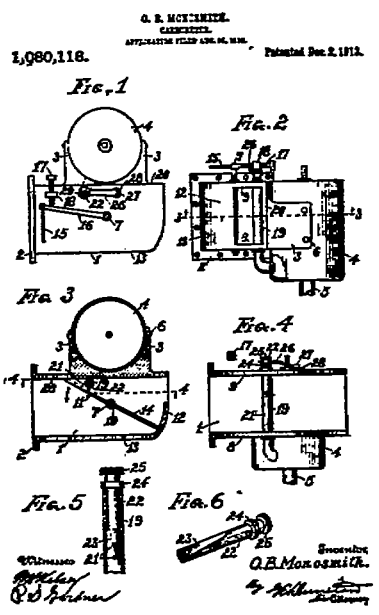
1,080,118.
Fig. 1
Fig. 2
Fig. 3
Fig. 4
Fig. 5
Fig. 6

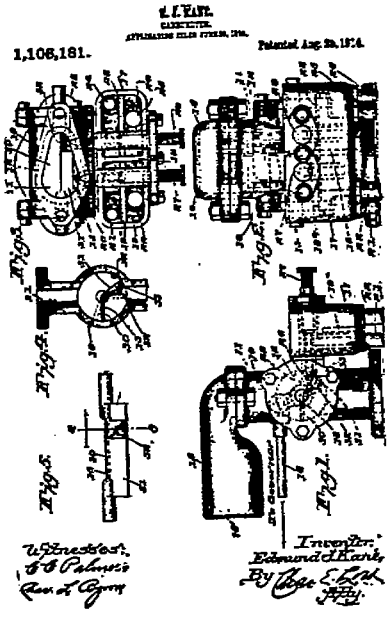
1,106,181.
Fig. 1
Fig. 2
Fig. 3
Fig. 4
Fig. 5

T. E. PARKER.
CARBURETER.
APPLICATION FILED AUG. 15, 1913.

1,117,288. Patented Nov. 17, 1914.

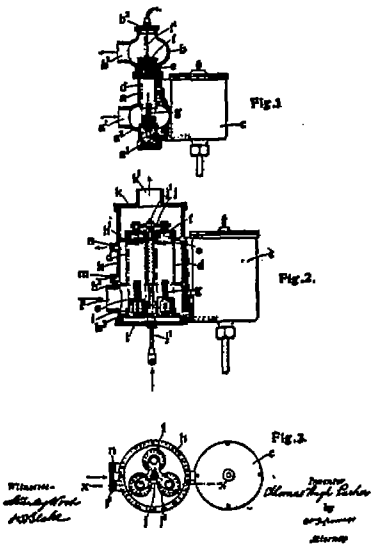

S. L. PRESCOTT.
CARBURETER.
APPLICATION FILED DEC. 1, 1914.

1,143,927. Patented June 15, 1915.

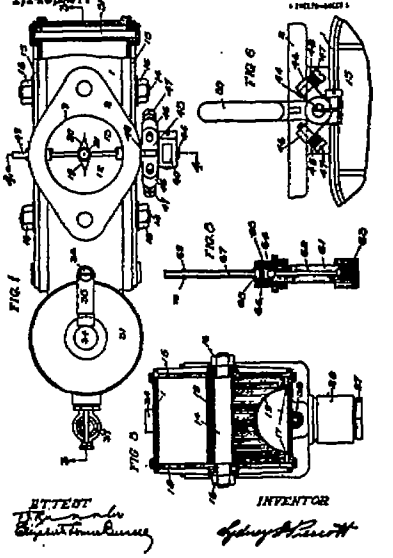

S. L. PRESCOTT.
CARBURETER.
APPLICATION FILED DEC. 1, 1914.

1,143,927. Patented June 15, 1915.

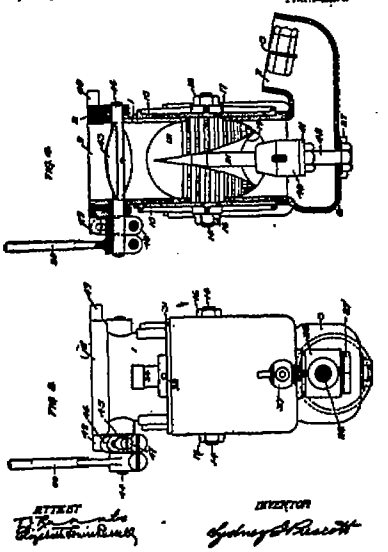

S. L. PRESCOTT.
CARBURETER.
APPLICATION FILED DEC. 1, 1914.

1,143,927. Patented June 15, 1915.

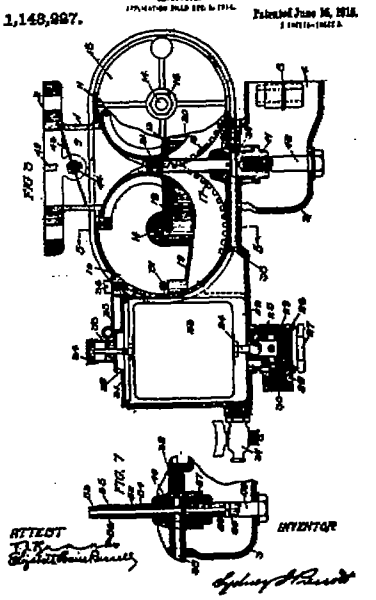

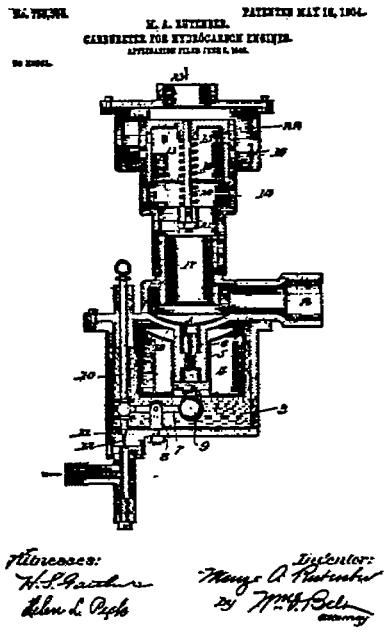
PATENTED MAY 16, 1904.
CARBURETER FOR HYDROCARBON ENGINES.
Witnesses:
Inventor:

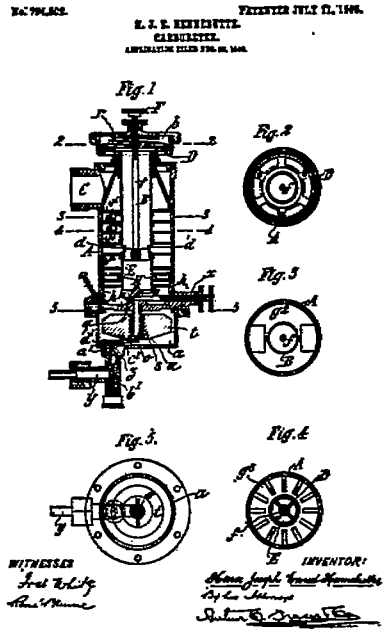
PATENTED JULY 12, 1904.
CARBURETER.
Fig. 1
Fig. 2
Fig. 3
Fig. 4
Fig. 5
WITNESSES
INVENTOR:

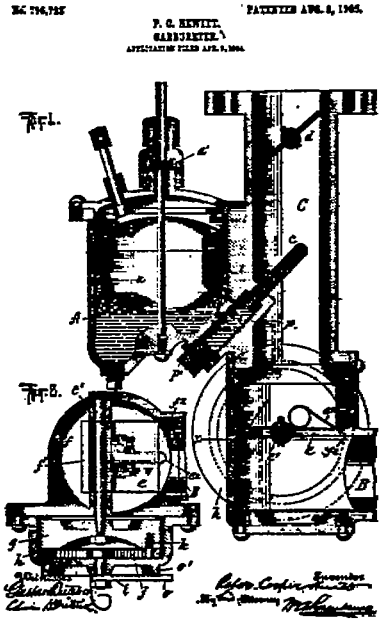
PATENTED APR. 5, 1905.
CARBURETER.
Fig. 1.
Fig. 2.

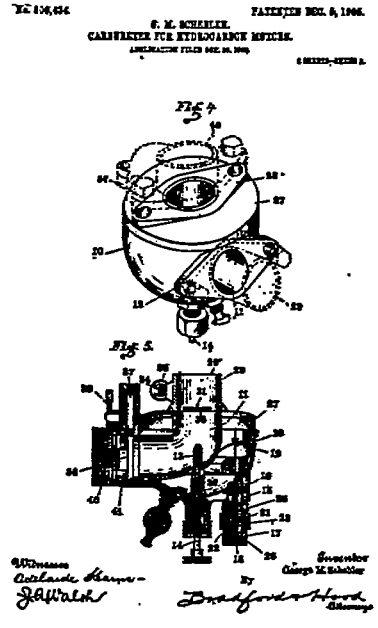
PATENTED DEC. 5, 1905.
CARBURETER FOR HYDROCARBON ENGINES.
Fig. 4
Fig. 5
Witnesses
Inventor

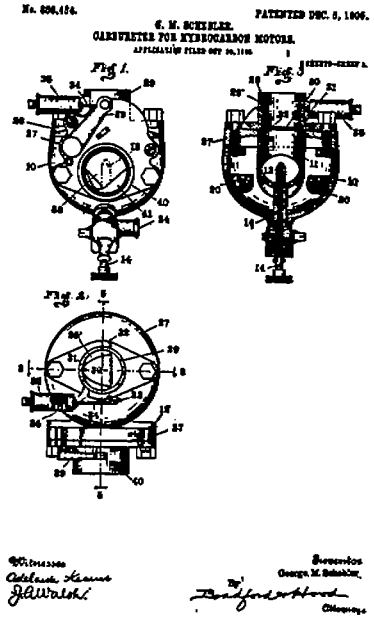
G. M. SCHEELER.
CARBURETER FOR HYDROCARBON MOTORS.
PATENTED DEC. 8, 1896.
Fig. 1.
Fig. 3.
Fig. 2.
Witnesses
Inventor
George M. Scheeler

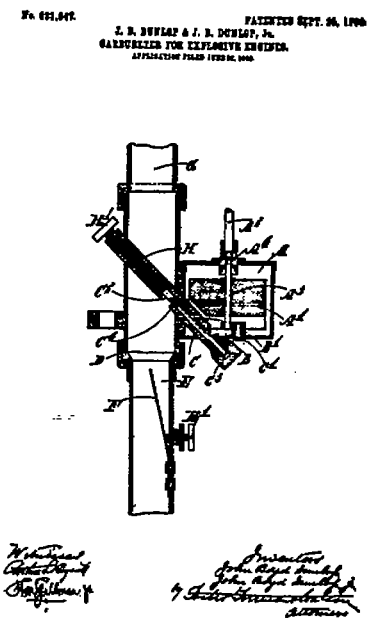
J. B. DUNLOP & J. B. DUNLOP, Jr.
CARBURETER FOR EXPLOSIVE ENGINES.
PATENTED SEPT. 26, 1896.
Witnesses
Inventors

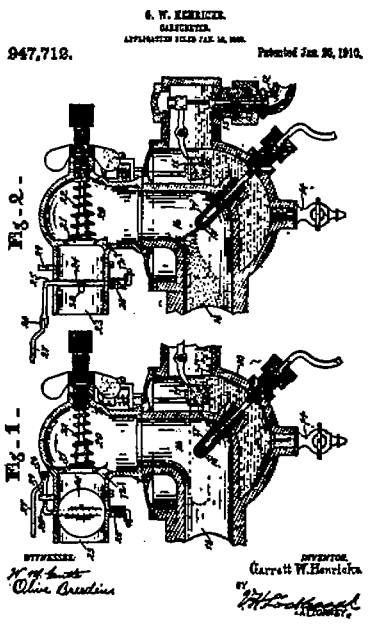
G. W. KERRICK.
CARBURETER.
947,712.
Patented Jan. 25, 1910.
Fig. 2.
Fig. 1.
WITNESSES.
Olive Cornelius
INVENTOR.
Garrett W. Kerrick
BY

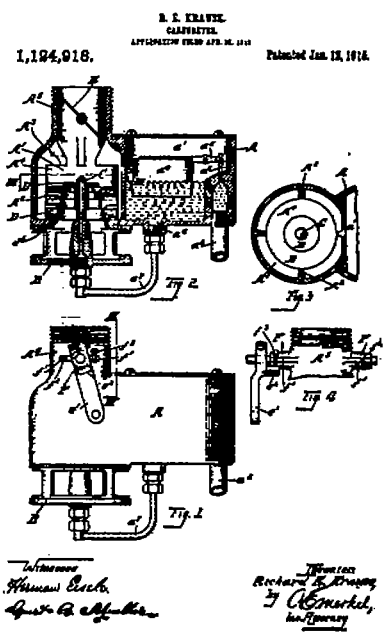
R. S. KRAUSE.
CARBURETER.
1,124,918.
Patented Jan. 12, 1915.
Fig. 2
Fig. 3
Fig. 4
Fig. 1
Witnesses
Hermann Esch.
Inventor
Richard S. Krause
BY
Attorney

H. E. FOGEL.
CARBURETER.
APPLICATION FILED JULY 31, 1909.

986,700. Patented Mar. 14, 1911.

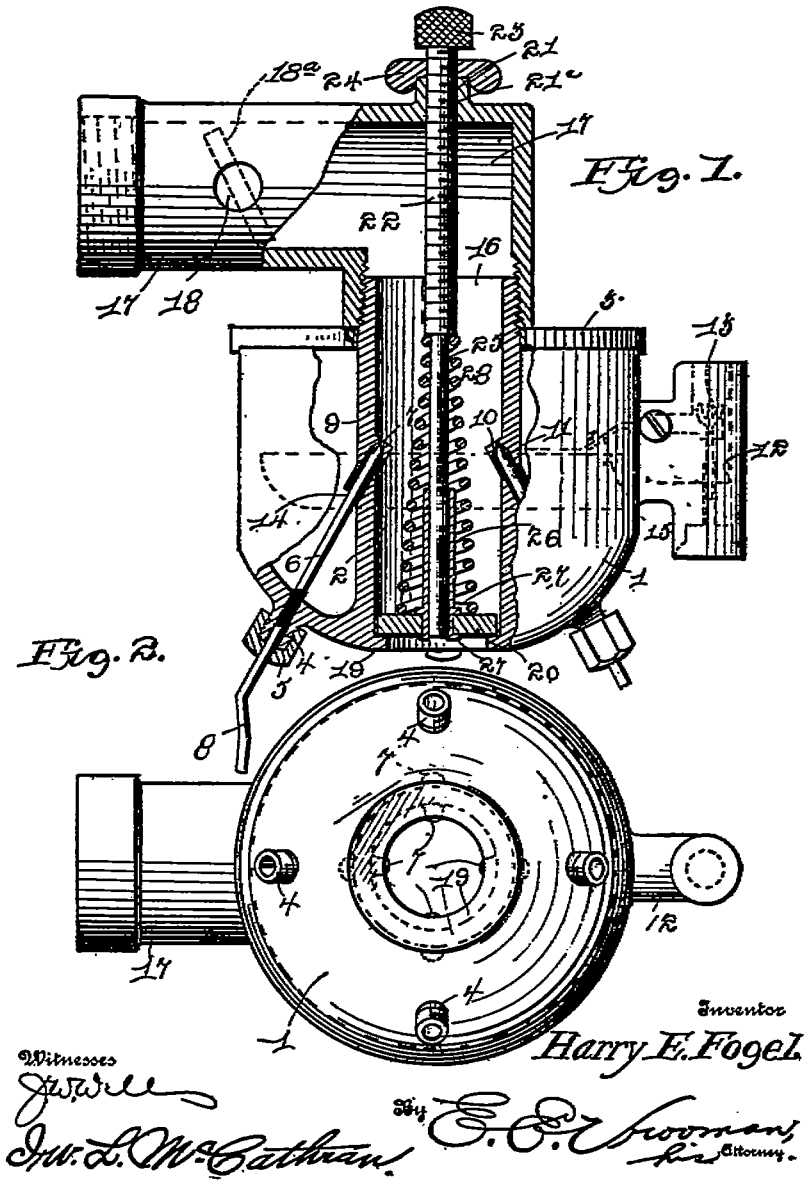

Witnesses
J. W. Will
Jno. L. McCathran.

Inventor
Harry E. Fogel.
By E. E. Goodman, his Attorney.

F. H. WALKER.
CARBURETER.
APPLICATION FILED JULY 11, 1911.

1,039,229. Patented Sept. 24, 1912.

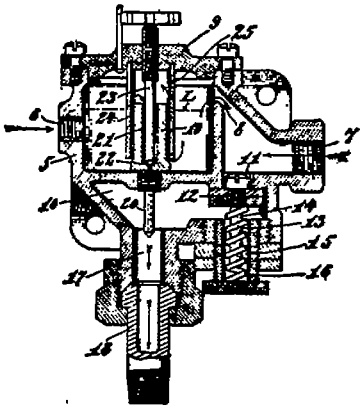

WITNESSES
H. C. Bapp
A. R. Walton

INVENTOR
Frank H. Walker
by Milo B. Stevens & Co.
Attorneys

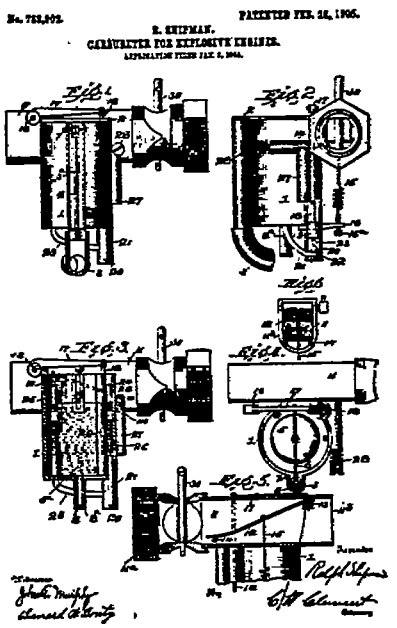
PATENTED FEB. 28, 1905.
CARBURETER FOR EXPLOSIVE ENGINES.

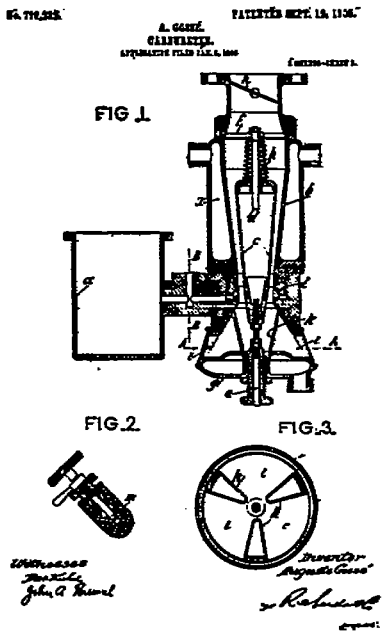
PATENTED SEPT. 12, 1906.
CARBURETER.
FIG 1.
FIG 2.
FIG 3.

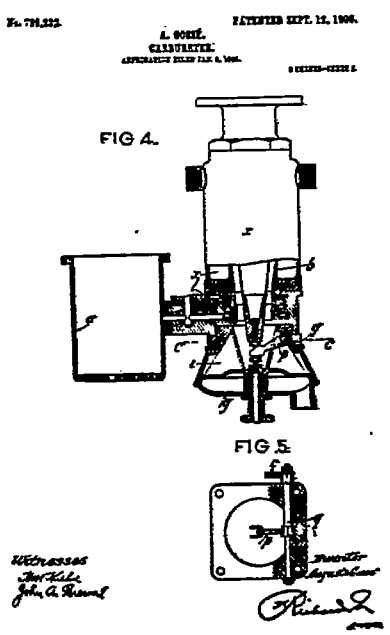
PATENTED SEPT. 12, 1906.
CARBURETER.
FIG 4.
FIG 5.

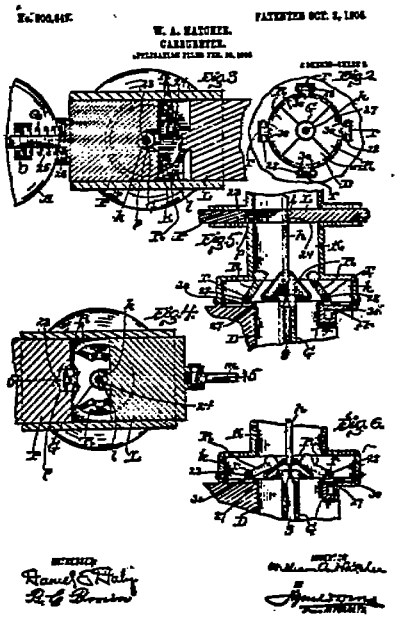
PATENTED OCT. 2, 1906.
W. A. HATCHER.
CARBURETER.

No. 870,613. PATENTED OCT. 5, 1907.

W. A. HATCHER.

CARBURETER.

APPLICATION FILED FEB. 28, 1906.

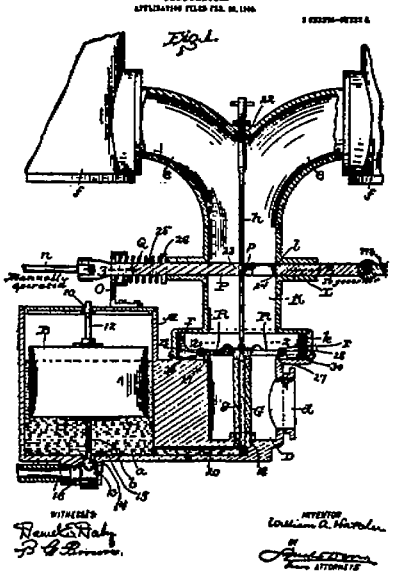

No. 864,719 PATENTED AUG. 6, 1907.

L. ANDERSON.

CARBURETER.

APPLICATION FILED JUNE 8, 1904.

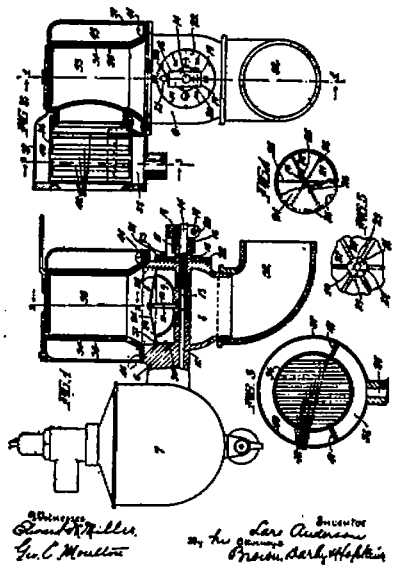

No. 875,714. PATENTED JAN. 7, 1907.

A. A. LONGEMARE.

CARBURETER FOR EXPLOSIVE ENGINES.

APPLICATION FILED NOV. 21, 1906.

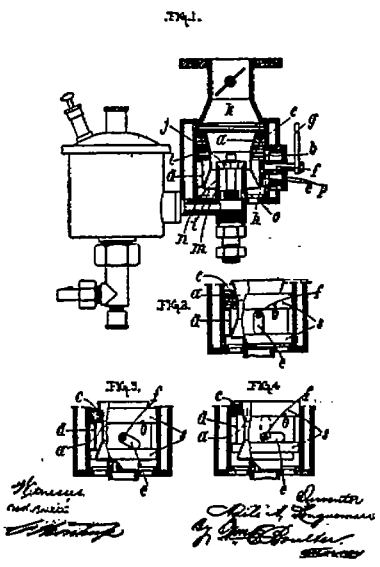

916,103. Patented Mar. 23, 1909.

D. J. CARTWRIGHT.

CARBURETER FOR EXPLOSIVE ENGINES.

APPLICATION FILED JUN. 8, 1904.

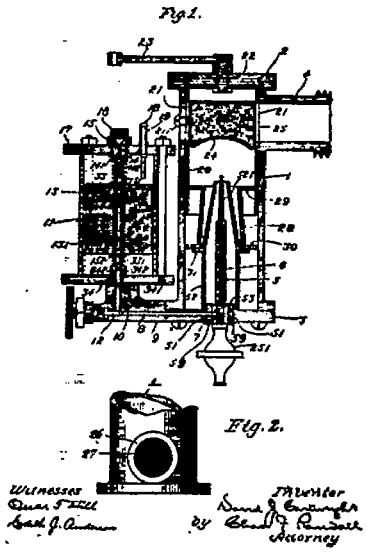

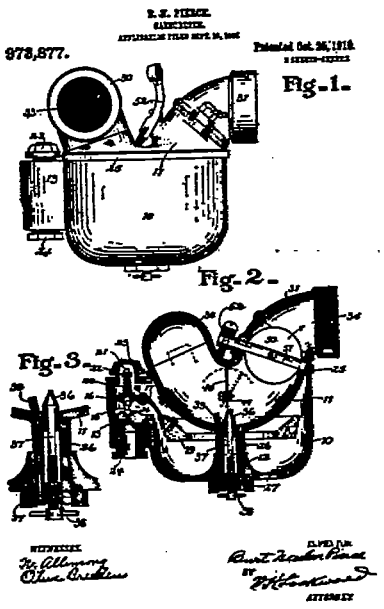
973,877.
Fig.-1-
Fig.-2-
Fig.-3-

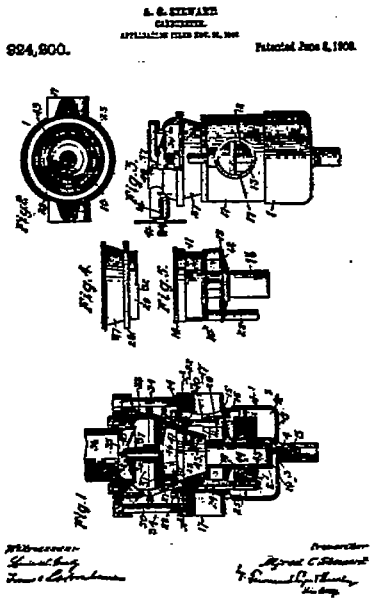
924,900.
Fig.1
Fig.2
Fig.3
Fig.4
Fig.5

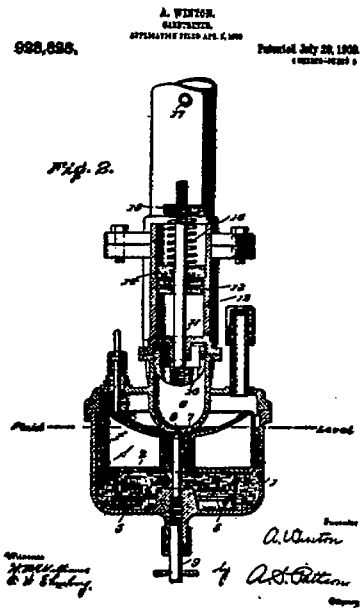
A. WINTER.
928,698.
Fig. 2.

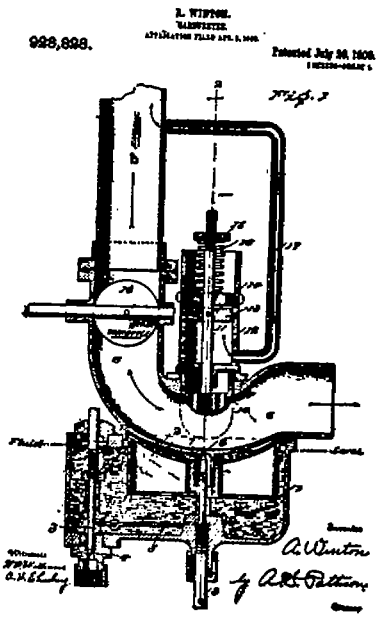
A. WINTER.
928,698.
Fig. 3

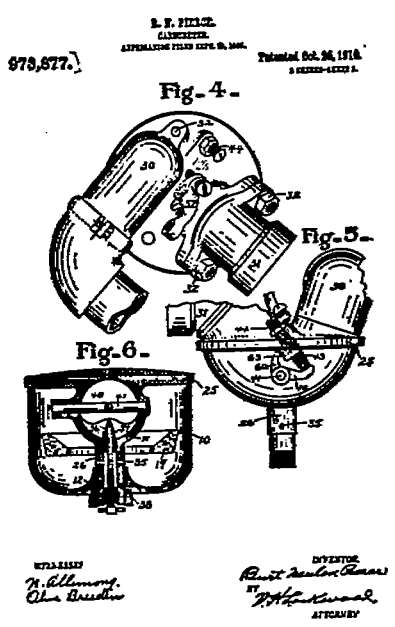
873,877.
Fig. 4.
Fig. 5.
Fig. 6.

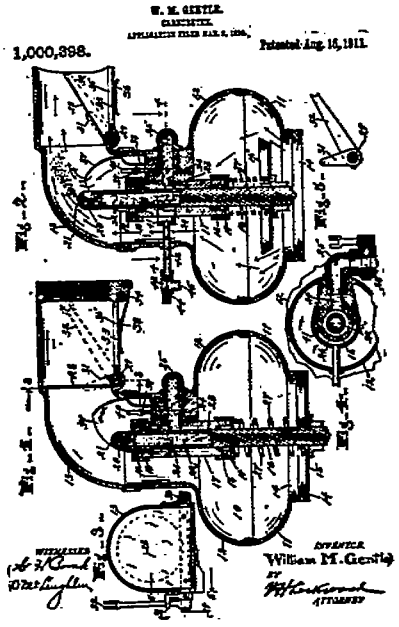
1,000,398.
Patented Aug. 15, 1911.
William M. Gentle

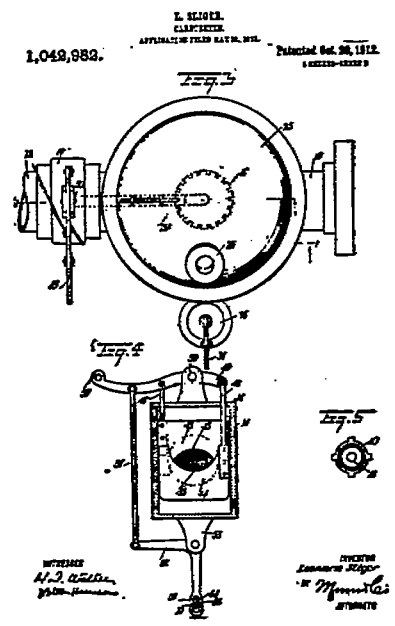
1,042,982.
Fig. 3
Fig. 4
Fig. 5

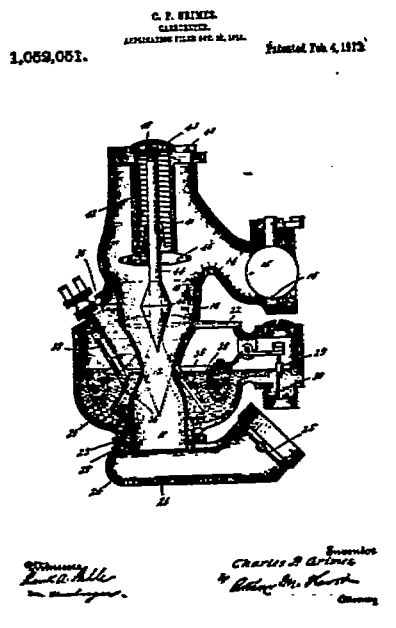
1,052,051.
Patented Feb. 4, 1913.
Charles P. Grimes

H. B. WYMAN.
CARBURETER.
APPLICATION FILED DEC. 6, 1912.

1,093,901. Patented Apr. 21, 1914.

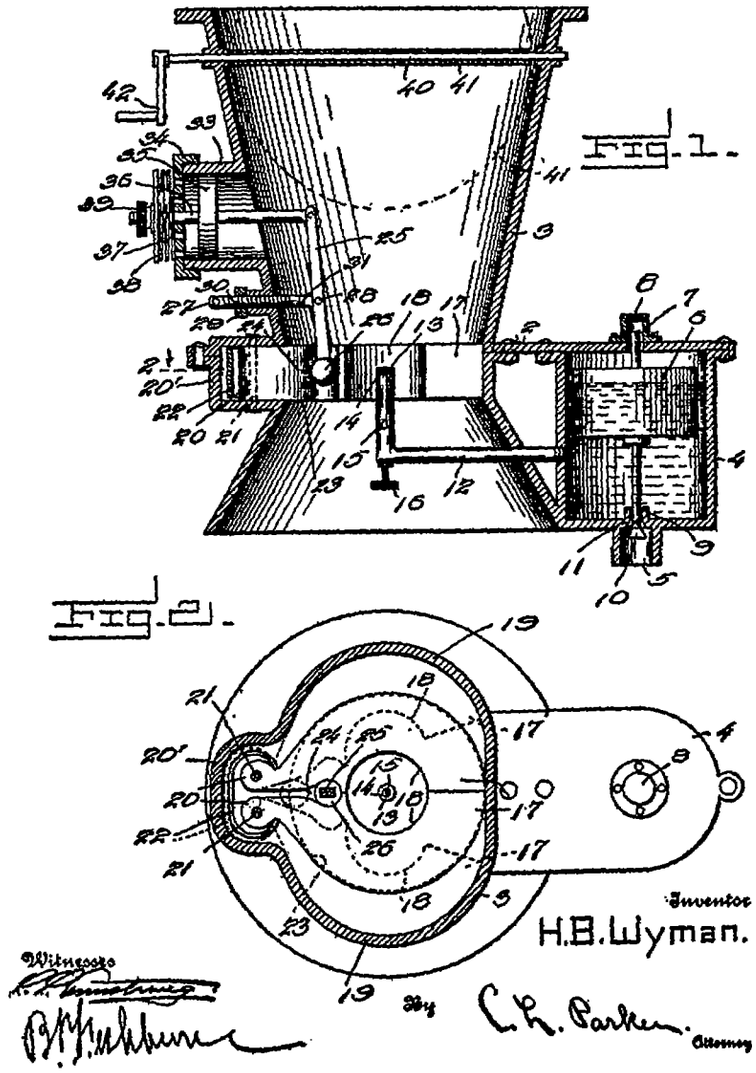

W. J. RUBESKY.

CARBURETER FOR EXPLOSIVE ENGINES.

APPLICATION FILED OCT. 11, 1909. RENEWED JUNE 17, 1914.

1,140,000. Patented May 18, 1915.

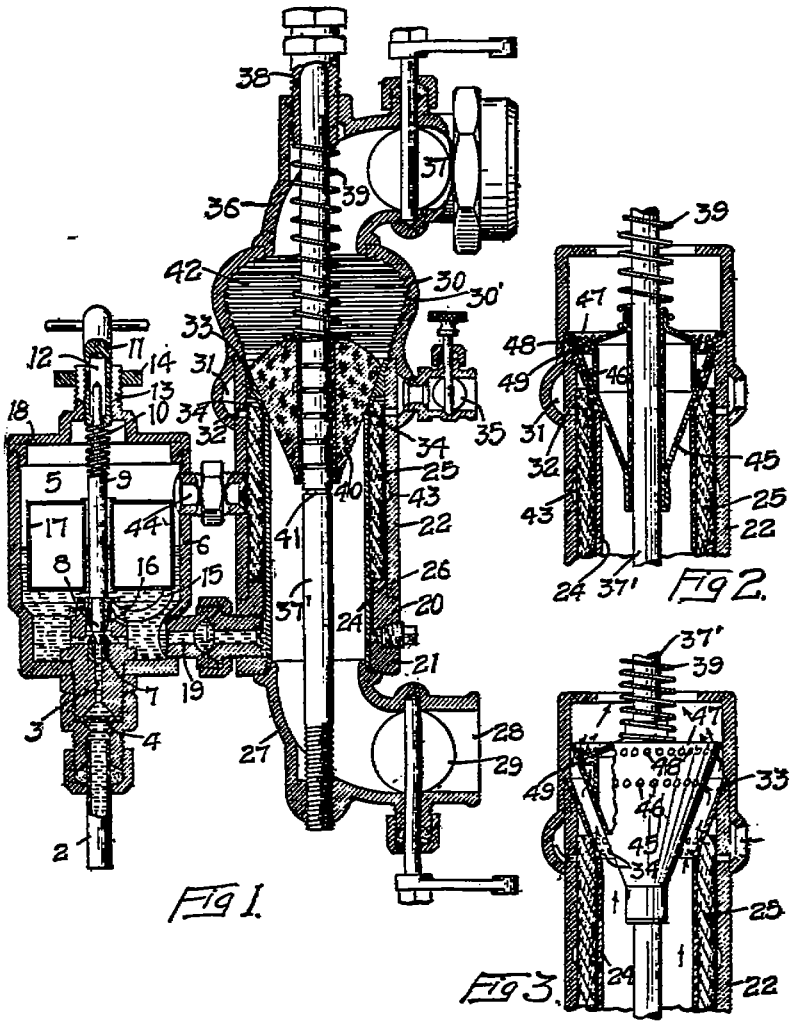

WITNESSES
A. W. Abstrom
J. A. Byington

INVENTOR
WILLIAM J. RUBESKY
BY Paul & Paul
ATTORNEYS

1,148,947. Patented July 27, 1915.

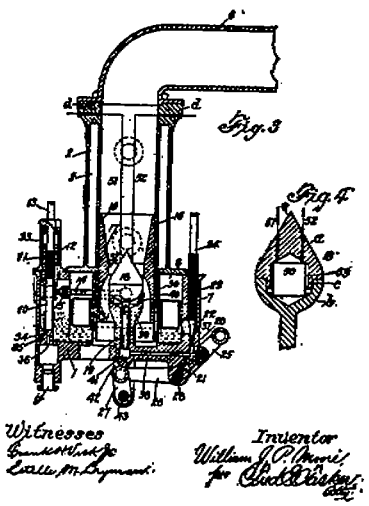

1,184,878. Patented May 30, 1916.

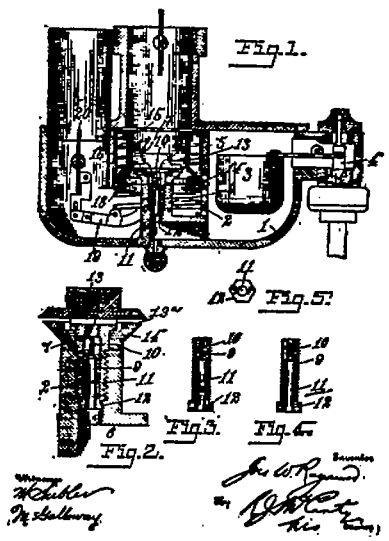

E. E. WICKERSHAM.
CARBURETER.
APPLICATION FILED JAN. 26, 1914. RENEWED JUNE 2, 1915.

1,167,457. Patented Jan. 11, 1916.

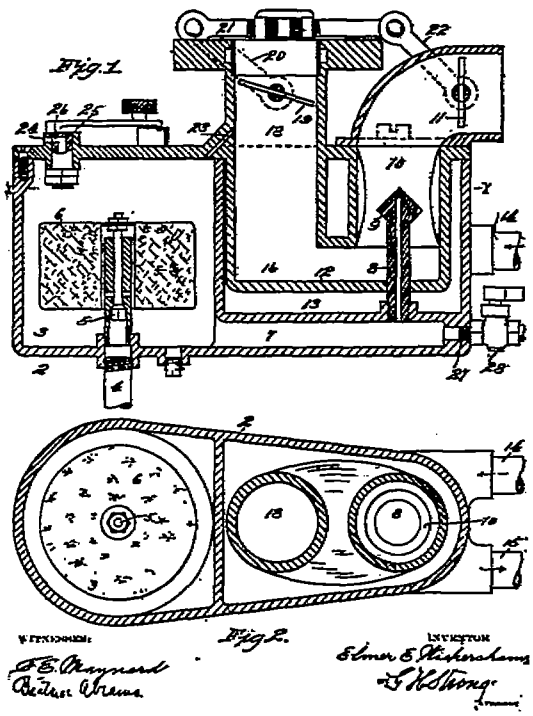

another with a spring load, having also a linkage connection to an air damper on page 286 (1,184,873, May 30, 1916, Raymond).

Subclass 7.5, variable float-chamber pressure.—Use of a variable float-chamber pressure in connection with a regulating air inlet valve is practically equivalent to the use of two compensators at once. There are not many of such, and only one will be used for illustration, that on page 287. (1,167,457, Jan. 11, 1916, Wickersham.) This has an air valve, throttle controlled, which as pointed out, is not a primary connection for flow control with variable speed engines, as the fuel-flow vacuum is as much fixed by speed as by throat position, and in this case the float chamber pressure is reduced below atmosphere by a connection to the mixing chamber as a corrector of excessive fuel flow for high vacuum.

Class 8—Carburetors, proportioning flow, aspirating, single fixed fuel inlet, multiple air inlets valved for regulation.—It is the general opinion that the first systematic attack on a large scale of the problem of compensation in carburetors followed the lines of this class, compensation by admission of secondary air, so the class is one of peculiar interest on that account. For a considerable period this sort of compensation was the standard and in fact about the only thing in use; and being successful, comparatively speaking, much attention was devoted to devising more and more varied details of apparatus, resulting in a pretty large class. It may be said that the limitations of mechanical ingenuity, in view of the process characteristics, have only recently been recognized, and the class as a class no longer is regarded as the only or even an adequate solution of the problem.

Of course, there may be mixed flow or other means of compensation associated with these multiple variable air and single fixed fuel inlets, but these double compensations are exceptions to the standard arrangement of the class, which is that of a fixed primary air supply passing the fixed fuel jet, to which is added a variable secondary air.

While, according to the definition of the class there may be more than two air inlets, it will be found that in nearly all cases the multiplicity is equivalent in effect to two, one acting as primary and the other as secondary. The subclasses are characterized by the different combinations of commonly used means of control of the regulating air valve and by the number of such, with one exception, the last subclass, which includes any sort of control of the regulating air valve, provided it is associated with the mixed flow sort of compensation.

Those cases that do not clearly fall under the subclass headings, or that might with equal propriety fall under more than one of them, are grouped under the general class number and will be examined first. The general idea is that a properly regulated secondary air inlet will by dilution compensate for the natural tendency of a fixed fuel inlet in a fixed air passage to become over rich on increased flow. The problem is to evolve such a control of the secondary air that as the total flow rate increases the ratio of secondary to primary air shall also increase and in just the right amount.

An early case of special control of the variable part of the air is that on page 298 (751,434, Feb. 2, 1904, Napier & Rowlidge), one of the first of the automobile group of patents. The idea here is control

of secondary air with engine speed to compensate for the increased richness tendency, and a diaphragm operates on an air-sleeve valve. The diaphragm actuating pressure developed by a direct connected pump, which pressure should rise with speed. Of course, difficulty results where the engine speed varies without any change in fuel requirements, due to a variable resisting torque.

One of the early cases of multiplicity of air inlets of the mixed sort is that on pages 298 and 299 (828,228, Aug. 7, 1906, Menns & Menns), in which all the air first enters through an automatic air valve provided with a liquid dash pot, and then divides into three streams, two of them fixed in area crossing the fuel nozzle, and therefore acting as a single primary air, while the third varies with the throttle and acts as a sort of secondary, being not far enough beyond the nozzle to be a pure secondary. Another mixed case is that on page 299 (920,642, May 4, 1909, Pfander), where, although the secondary air is correctly located to act as such, it enters through two ports, one controlled directly by the throttle and the other automatic. This case also illustrates the idea of the warming jacket for the mixing chamber. Similarly mixed is the case on page 299 (929,260, July 27, 1909, Stevens), which provides besides, the fixed primary air, two automatic secondary air inlets, both annular and concentric with the nozzle. Two fixed air inlets, one directed directly across the jet and the other surrounding it, both acting as primary air but to different degrees, with a throttle controlled secondary air, is the combination illustrated on page 299 (970,916, Sept. 20, 1910, Gerken).

Location of the secondary automatic air valve beyond the throttle is shown on page 300 (1,001,969, Apr. 29, 1911, Maynard), where a fixed fuel and air inlet discharge their mixture through a check valve into the body of a cylindrical throttle beyond which the secondary air enters. Combination of compensation by throttle-controlled secondary air and by movable throat with reference to a fixed nozzle, is illustrated on page 300. (1,019,128, Mar. 5, 1912, Bulock.)

Double compensation of another sort is used in the construction shown on pages 300 and 301. (1,020,059, Mar. 12, 1912, Schulz.) An opening from the top of the float chamber to the mixing chamber is constantly in action and another opening from the float chamber to the atmosphere, is clased by the stem of the automatic secondary air valve when that is closed, and opens with it. Accordingly the starting or low-flow rate takes place with subatmospheric pressure in the float chamber and this lasts until the secondary air valve opens, at which time the float chamber pressure builds up, increasing the fuel flow as does the nozzle throat vacuum with air flow, and the secondary air as well.

A case of combined throttle and automatic control of the air is shown on page 301 (1,073,473, Sept. 16, 1913, Claudel), in which there are three air ports, one secondary and two primary, and of the latter one is fixed, while the other varies with the throttle, as does the secondary. The air for both of the throttle-controlled ports, one primary and one secondary, enters through an automatic valve. One odd case is that on page 301 (1,099,086, June 2, 1914, Hamilton), which illustrates not only an unusual air-inlet arrangement, but also the use of a burner for heat in combination with a proportioning flow carburetor. An oil-burner chamber with a pilot and a main jet,

is attached to the side of the carburetor and has itself two air inlets, one fixed and the other automatic. The main air for the engine fuel enters through an automatic valve and the mixture made by it passes through a nest of flame-heated tubes, together with the products of combustion of the burner, which carry excess air. The carburetor throttle controls the main burner jet, and compensation of proportions is expected from the tilting of the automobile carrying the device, uphill position increasing the fuel-flow head. It must be admitted that the interesting feature of this combination is rather its suggestiveness than its practical value.

Automatic valve control of primary air with a fixed secondary, the reverse of the usual arrangement, is shown on page 302 (1,104,762, July 28, 1914, Ahlberg), in which there is also illustrated the piston type of control of the automatic valve, spring loaded, and acted on by the vacuum at any selected point of the system, as well as the entraining idea of a jet and throat to induce a secondary air flow by that of the primary. A water nozzle is also shown beside that for fuel.

Another unusual sort of thing is that on page 302 (1,119,757, Dec. 1, 1914, Kings.) Here the primary air inlet is fixed and leads through a multiplicity of crossing passages, in the course of which the fuel is met and carried along, being thereby subjected to a spraying action before meeting the automatic secondary air. The action of the primary air and fuel passages is much the same as in the spray nozzles of some direct injection heavy oil engines. A similar use of one of the air inlets for spraying purposes, but in a different way, is shown on page 302 (1,127,992, Feb. 9, 1915, Hartshorn), where three air inlets are provided, a small fixed primary spraying stream entering a tubular jacket surrounding the nozzle, a main primary air inlet passing the nozzle, and a secondary air beyond the last two, both entering through automatic valves of different size and which may be different loaded. Still another case of a spraying air stream is that on page 303 (1,123,955, Jan. 5, 1915, Tice), applied to a carburetor of the sort in which the main air valve becomes the throttle and the float-chamber pressure is equalized with that at a selected point of the vacuum chamber for compensation. Here the spraying air inlet is fixed within the fuel nozzle and its size such as is proper to admit all the air needed for idling when acted on by the full vacuum due to a closed throttle, or in this case air-inlet valve. Here the main idea is spraying and vaporization instead of proportionality compensation, which, by reason of the limits of the critical air-velocity law, appears to be difficult, if not quite impossible. In accordance with this law the air flow fails to increase when the absolute pressure on the vacuum side of the inlet passage passes below 60 per cent in round numbers of the barometric as it does for lesser vacua, whereas the fuel flow does increase regularly.

Throttle control of a single main air inlet with similar throttle control of subsequent air distribution as secondary and primary air is illustrated on page 303. (1,137,307, Apr. 27, 1915, Edens.) This is a case of fixed primary air to a venturi, with secondary air controlled by throttle, and with the pressure at which both supplies are received also controlled by the throttle to something below atmosphere, the double air valves acting themselves as throttle.

A flat rectangular throttle arranged to always direct the entering air across a long slot form of fuel inlet or a row of holes equivalent thereto, with an automatic secondary air valve is shown on page 303. (1,151,989, Aug. 31, 1915, Balassa.) This is one of the cases where the primary proportionality is determined by the air-velocity head vacuum on the fuel flow, with automatic air-valve compensation, the primary air valve being itself the throttle, and the fuel inlets so located in front as to receive none of the air entrance resistance vacuum.

Subclass 8.1—two air inlets, fixed primary, throttle-controlled secondary regulating air valve.—Compensation through a throttle-controlled valve of any kind, as has already been pointed out, is of little, if any, value for variable speed engines where flow velocity is not of itself determined by throttle position, however much this may approach the truth in constant speed engines. The examples of this subclass must therefore be regarded as interesting in only an indirect way for general-service carburetors and not as promising or valuable schemes for any variable speed work, though they were used considerably in the early days of the automobile, before the real nature of the problem was as well understood as it is to-day.

One of these early automobile cases is that on page 304 (733,625, July 14, 1903, Clement), showing secondary air controlled by the rotation of a barrel form of throttle, for diluting and so compensating the mixture from a fixed fuel and primary air inlet. Similar control by the longitudinal movement of a barrel throttle is shown on page 304. (794,951, July 18, 1905, Schaaf & Lacy.) A combination of damper throttle and cylindrical balanced secondary air valve is shown on page 304 (851,285, Apr. 23, 1907, Freeman); a damper throttle with a sector slide air valve on page 304 (954,630, Apr. 12, 1910, Howarth); and a damper throttle geared to a rotating cylindrical secondary air valve on page 305. (1,011,565, Dec. 12, 1911, Brock.) This last case also illustrates an annular form of fuel inlet so that the fixed primary air inlet surrounds the variable secondary, which is central.

While, of course, control of secondary air with the throttle normally means that the port is actuated directly by or from the throttle, the same result follows precisely, if both are simultaneously operated from the engine mechanism as on page 305. (1,060,053, Apr. 29, 1913, Winkler.) Here the throttle is the engine inlet valve, operated by a cam, while another cam operates the secondary air valve at the same time, over a corresponding though perhaps shorter interval. The primary air is reduced to hardly more than what will serve for spraying purposes.

Use of a lifting tube in connection with a combined cylindrical throttle and secondary air inlet is shown on page 305 (1,097,401, May 19, 1914, Donndorf), where the spillage from the jet at low-flow velocities is caught in a shroud tube surrounding the nozzle, the bottom of which is led beyond the throttle to maintain a steady feed when idling, as is done so frequently in other classes of carburetors. A case of primary air direction by guides combined with throttle control of secondary air is shown on page 306 (1,123,027, Dec. 29, 1914, Simonson), which is also peculiar in having two sets of holes in the top of the float chamber, one to the primary passage beyond the jet, and the other to a low point of the secondary mixing

chamber, provided to drain back unvaporized fuel. It is a question just how these holes will act, but it is clear that they will result in some modifications of float chamber pressure and therefore of fuel control.

Two dampers linked together, one as throttle and the other as secondary air valve, are shown on pages 306 and 307 (1,148,898, Aug. 3, 1915, Henley), which case also has two other peculiarities. In the first place the primary air is so small in amount as to be practically no more than spraying air, exerting little control on the amount of fuel flow, but some, and, second, the entrance of the secondary air is guided by curved vanes to produce a vortex at the jet to secure a main control of fuel-flow vacuum. One of the most recent cases and of peculiar form is that on page 307 (1,185,273, May 30, 1916, Atherton), which has a secondary air valve linked to the throttle, both of damper form but with an automatic valve to control the amount and the velocity of the secondary air that shall pass the outlet of the primary air and its fuel or completely by-pass it.

Subclass 8.2—Two air inlets, fixed primary, automatic secondary regulating air valve.—As a subclass this is a very large, if not the largest one of all, which is not unnatural, considering the scope it offers to the mechanically ingenious. The principle is entirely sound and correct qualitatively; and this coupled with the fact that compensation by adding an automatic secondary valve, the simplest form of which is the spring-loaded check, seems a simple, cheap, and easy thing, is responsible for the flood of inventions along this line. The difficulty is one of degree, because the compensation means must be not only right in principle but must be so also in amount, and the real problem is one of design of secondary air valves in form, size, and especially in loading so they will give just the right compensation and keep it so, without variation throughout the life of the carburetor. No better example of the inadequacy of invention alone without the quantitative relationships of design, distinguishing it from invention, could be found, than this class so voluminous as to invention and so unsatisfactory as to practical commercial results in proportion to the effort expended.

One of the early cases of this subclass, that on page 308 (649,324, May 8, 1900, Longuemare) associates an automatic secondary air valve of annular form, concentric with the primary, with a fuel inlet of several slots cut in the face of a tapered plug on a matching seat, the fuel inlet being located in a short straight primary air tube generally termed a choke or strangle tube. A somewhat similar form of fuel inlet arranged in the wall of the primary air passage and associated with a cross-flow automatic secondary is shown on page 209. (759,001, May 3, 1904, Mohler.) One of the most important of the cases of this class, page 308 (785,558, Mar. 21, 1905, Krebs), uses a balanced secondary air valve operated by a spring and diaphragm, controlled by the vacuum in the secondary air passage. This case is interesting because the inventor was the first and most vigorous advocate of this type of compensation and by his publications on the subject was responsible more than any other individual for the stimulation of world-wide interest in the class. An automatic secondary air valve loaded by the buoyancy of a float in mercury is shown on pages 308 and 309 (802,216, Oct. 17, 1905, Johnston), which at once calls attention to the problem of valve loading.

It is evident that if proper compensation is to be attained with the normal arrangement of fixed fuel inlet in a primary air-choke tube, the secondary air must increase in proportion to the total, and this requires a variable loading with opening, which can not be obtained by gravity alone might be, but is difficult with springs alone, could by combination of links and cams with gravity and spring forces, or by their equivalent, buoyancy against float shape. The rest is matter of practicability.

An annular spring-loaded automatic secondary air valve is shown on page 309 (810,792, Jan. 23, 1906, McIntosh), which has a peculiar element. The choke tube is of the tapered form and is part of the air valve, so the fuel inlet finds itself at a wider part of the choke tube when the secondary lifts than before. This makes the compensation double, first, by secondary air in the ordinary way, and, second, by the variable throat and nozzle relation itself. A flat-ring form of air valve is shown on page 309 (831,832, Sept. 25, 1906, Coffin), which on lifting supplies a double air stream, one directed toward the center and the other outward, and only the latter is truly secondary, because the former by its velocity across the fuel inlet acts substantially as does the primary air in inducing fuel flow.

As an example of loading by means of a combination of links and springs to secure a particular rate of opening with vacuum, the form on page 310 (835,880, Nov. 13, 1906, Clement) is of interest.

An attempt at direct relationship of secondary air to total mixture is found on page 310 (856,958, June 11, 1907, Huber), where the secondary air valve is balanced and not affected by the vacuum at all, but is moved by a floating spring-resisted check valve in the main stream of mixture, the lift of which is more or less directly related to the total flow.

All of the previous cases in which the secondary air valve is opened by the vacuum use the vacuum at a point beyond the primary mixture inlet, usually at an enlarged chamber where the velocity is low, but in the following case there is a departure from this practice. On pages 310 and 311 (860,848, July 23, 1907, Bowers) the primary mixture discharges from a restricted orifice in the center of the throat of a larger venturi tube, and through the annular space thus formed the secondary air enters after passing its automatic valve. The vacuum at this high-velocity point controls the opening of the automatic valves instead of that at some more distant chamber or low-velocity point.

An indirectly loaded secondary air valve is shown on page 311 (888,487, May 26, 1908, Greuter), where a simple lever and spring are used instead of a direct spring, but with no different force or loading characteristics. Arrangement of the secondary air valve at the highest point with a long vertical primary mixture lifting tube is shown on page 311 (888,965, May 28, 1906, Delanay-Belleville), which is of interest not because of any peculiar compensating value, but because of its adaptability to low-volatile fuels now so common and which are difficult to handle at low-flow rates because the velocity is not high enough to lift the unvaporized liquid when, as is usually the case, the float chamber must be set low. Recognition of one of the practical difficulties of the automatic air valve is found on page 312 (912,083, Feb. 9, 1909, Daley), where there is provided a liquid dash pot to dampen the movement of the automatic air valve. The

fuel is itself the dash-pot liquid, and the valved form is used, permitting free downward movement corresponding to flow increase but restricted upward movement. An unusual form of fuel inlet is also shown, an annular slot formed between a rod and a concentric hole in a plate. The form of the air valve with its long tapers is also a recognition of the need of a graduated opening with vacuum. A special form of spring loading for the automatic air valve is shown on page 312 (927,529, July 13, 1909, Harrington), where a flat flexing spring with an adjustment for its free length is provided. Location of the automatic air valve in a side chamber, a pretty common arrangement in the later forms, and the use of the tapered primary air-choke tube, also more and more frequently adopted later, are illustrated on pages 312 and 313 (928,042, July 13, 1908, Goldberg).

An interesting form of graduated air valve is that shown in figure 222 (932,860, Aug. 31, 1909, Groubille & Arquembourg), where a number of metal balls of varying size constitute the air valve, or, rather, a set of air valves of different size and opening resistance, and these are shown as associated with the venturi form of primary inlet. Another example of ball-type air valve is shown on page 313 (974,076, Oct. 25, 1910, Kingston), where the balls are all the same size, but their seats are of different diameters.

A special valve-loading mechanism is illustrated on page 314 (976,558, Nov. 22, 1910, Dayton), a sort of clock spring and gear train, and another still different on page 314 (976,692, Nov. 22, 1910, Riechenbach), this latter associated with a swing form of valve and introducing cams to secure the force variation required with reference to vacuum and valve opening. Flexing flat spring strips over slots to make an automatic air valve are shown on page 315 (997,233, July 4, 1911, Bowers). Control of the automatic air valve by the vacuum at the throat of the primary venturi instead of that beyond it, on the theory that this throat vacuum is itself a measure of air flow and can properly be made a prime factor in the motion of the air valve, is illustrated on page 315 (1,067,502, reissued as 13,784, Aug. 4, 1914, Brown).

The long curved shape of the valve face itself acts in a manner equivalent to a cam type of valve loading and a somewhat similar idea of valve face form used with direct spring loads against the main mixing-chamber vacuum is shown on pages 315 and 316 (1,069,671, Aug. 12, 1913, Brush), associated with a direct-acting lifting tube by-passing the throttle. A differential form of air valve is shown on page 316 (1,071,858, Sept. 2, 1913, Ball & Ball); also direct spring loaded and opened by main mixing-chamber vacuum, but having a quite small fixed primary air inlet, in which is a special form of fuel inlet, a capillary annulus formed between a long tapered wall and a corresponding rod.

An example of two automatic secondary air inlets which in action are equivalent to one is given on page 316. (1,086,287, Feb. 3, 1914, Gehrmann.) An automatic air valve form adapted to be influenced to the maximum degree by the velocity of the passing air is shown on page 316. (1,092,282, Apr. 7, 1914, Mixsell.) Here the reversal of flow direction produces a reaction assisting the opening and equivalent to an increase of vacuum or a decrease of spring tension. Double-spring loading of the automatic air valve is shown on page 317 (1,112,257, Sept. 29, 1914, Brush), where the second spring comes

into action to increase the loading after the valve movement has exceeded a given value. It also illustrates again the high-point location of the air valve with a long lifting primary tube for low float chambers. The primary and secondary streams approach the throttle from opposite directions, and the throttle itself distributes the mixture to four cylinders by four ports, each feeding a separate mixture passage. Heating of the secondary air between the valve and the mixing point is illustrated on page 317 (1,140,064, May 18, 1915, Rakestraw), which also shows a heated and baffled mixing chamber. Such heating, if not quite constant, causes a variable expansion of the air, affecting flow as would a varying resistance of passage, and this interferes with proportionality.

A sort of floating automatic secondary air valve is shown on pages 317 and 318 (1,143,961, June 22, 1915, Haynes), formed somewhat like a perforated nozzle cap, the primary air being fixed by the holes in the cap and the secondary varying with its lift. There is also shown a wick air humidifier in the primary air. Electrical heating of both the air and the fuel separately in connection with an automatic air valve of the clock form is illustrated on page 318 (1,150,619, Aug. 17, 1915, Percival & Patterson), one of a large number of cases where the attention being concentrated on the problem of applying heat to vaporize heavy fuels has led to the introduction of proportionality interferences by variable back-pressure effects in the case of the air and variable viscosity and efflux effects on that of the fuel.

With the idea of promoting acceleration on a sudden opening of the throttle, a special form of throttle carrying the automatic secondary air valve has been arranged, as shown on page 318. (1,162,576, Nov. 30, 1915, Daimler & Slaby.) A quick opening of the throttle by a sort of dashpot action momentarily closes the secondary air valve and enriches the charge accordingly, but immediately afterwards the position due to the vacuum is taken up automatically. This is equivalent to the accelerating cup, except that it acts equally at any position.

Subclass 8.3—Two air inlets, both with regulating valves, one automatic, the other throttle controlled.—One case will serve to illustrate this unimportant mixed class, that on page 319 (1,060,545, Apr. 29, 1913, Gentle), which has the main primary air entering through an automatic valve and the secondary controlled by the throttle. A peculiar form of fuel inlet is provided, characterized by capillary flow, which consists of a wire screen in a narrow annular slot, the screen being cylindrical and carried by the automatic valve.

Subclass 8.4—Two air inlets, both with automatic regulating valves.—As compared with fixed primary air, the case of primary air entering through an automatic valve with a fuel inlet beyond it would require rather less compensation for proportionality because of the increasing area of air entrance which directly tends to retard excessive rise of vacuum, especially with gravity loaded valves as compared with spring loaded. In fact, with a gravity loaded primary air valve and a fixed fuel inlet beyond it insufficient fuel will enter at high flow rates unless some special arrangement is introduced to force it, because the increase of vacuum and hence fuel flow, with reference to air flow, is negligible. With spring loaded valves having an increasing tension there may be required more or less compensation which might be obtained with a secondary spring load. In gen-

eral, there is likely to be rather too much trouble and difficulty in getting a proper spring loading for one valve to warrant trying it with two, so this subclass is one of doubtful practical value, though within the range of qualitative possibility. Location of the fuel inlet at or before one of the automatic air valves is one more or less common special arrangement where the case is least complex.

In the form page 319 (762,707, June 14, 1904, Grove) the fuel inlet is in the seat of the primary automatic valve. If, as is most often the case, it may be assumed that this valve when it opens at all opens full against its stop, then this is equivalent to a fixed fuel and a fixed air inlet arranged for gravity flow of fuel for slow-speed engines. The secondary air being automatic, the case is one that might be assigned to the subclass 8.2, as adapted for periodic opening of a fuel valve with pressure feed.

With the arrangement on page 320 (790,173, May 16, 1905, Biehn) the situation is quite different, for here a double valve with a single spring load operates so as to decrease the primary air as the secondary air increases, the former being controlled at the outlet point of the primary air and its fuel. Location of the fuel inlet in the path of the primary air entering through an automatic valve, gravity loaded so as to receive the direct velocity head vacuum action which should be nearly constant, is illustrated on pages 320 and 321. (806,830, Dec. 12, 1905, Packard.) The secondary air opens after the primary opening has exceeded a given value, and a single valve controls both openings. A pair of conically helical spring forms of valve is shown on page 321 (960,080, May 31, 1910, Fay & Ellsworth), with the fuel inlet located in a fixed air passage in front of one of these spring automatics, which controls the primary air at its outlet. This arrangement so far is equivalent to a fixed air and fuel with an outlet throttle and tends to become rich, so a secondary air valve is a corrective. In this case the tension of both spring valves is subject to hand control so they may be made to serve as throttle.

A somewhat odd case, having a fuel inlet in the seat of one automatic (as in 762,707, Grove), is that on page 321 (1,136,675, Apr. 20, 1915, Hutchinson), where special means are provided between the two valves for separating out and drawing away the unvaporized fuel. This shows the later recognition of the prevalence of nonvolatile fuel and the necessity for some means of dealing with the unvaporized liquid portions, but a rather questionable way, because any fuel thus drained away is responsible for just so much interference with proportionality otherwise established by the flow. This returned liquid being the heavier portion, it can not be used again in the same sort of carburetor with any more hope of vaporizing the second time than the first, in fact, less.

One example of an arrangement that requires rather less than more compensating action of the secondary air valve is shown on page 321 (1,183,137, May 16, 1916, Swarts). Here the taper throat of the primary air passage lifts automatically, thereby tending to compensate directly, and the secondary automatic air valve is expected to do the rest. The effect of this arrangement should be similar to those of subclass 8.2.

Subclass 8.5—Two air inlets, both with throttle controlled regulating valves.—With the reminder that such direct throttle control is only, or mainly, of interest in connection with constant-speed engines,

this class assumes but small importance in the general carburetor case, which includes the variable-speed engine.

Two air valves acting as throttle and so formed as to be really a double-ported single valve is the arrangement on page 322 (714,597, Nov. 25, 1902, Mors), originally intended for automobiles. The next case (856,638, June 11, 1907, Higgins), is one of those designed for stationary engines and has two air inlets, one increasing and the other decreasing with the throttle, so arranged as to control the vacuum at the fuel inlet. A double-ported slide valve, acting as air valve and throttle, has a fuel nozzle in front of one in the port that serves as a primary air passage, while the second port controls the secondary air simultaneously in the construction on page 322. (846,471, Mar. 12, 1907, Hobart.) The same case illustrates a double-beat disk valve and a damper valve acting in the same way. A cylindrical sleeve, constituting the tapered air throat by its two sets of ports, acting as throttle and auxiliary air valve, and its free and acting as primary-air valve, is illustrated on page 322. (905,012, Nov. 24, 1908, Spranger.) The motion of the throat, with reference to the jet nozzle is itself a compensating influence, leaving less for the primary and secondary air ports to do.

A sliding semicylindrical plug throttle moving across a pair of air ports, one of which carries the fuel inlet, and thereby controlling the total air and the ratio of primary to secondary air is shown on page 323. (988,800, Apr. 4, 1911, McHardy & Potter.) Two damper valves arranged to act at the same time as air valves and throttle may be made to accomplish at least qualitatively the desired compensation for constant speed engines when arranged as on pages 323 and 324 (1,014,328, Jan. 9, 1912, Podlesak.) A double air passage has a damper in both branches, so linked together as to give the compensation desired, the fuel nozzle being located in one of them as as to receive the velocity head vacuum of one of the four air streams formed by the dampers.

Subclass 8.6—mixed flow.—One very early case of the direct sort of compensation that is possible by the mixed flow principle, but used in conjunction with a variable main air inlet to minimize the total drop in pressure through the carburetor as compared with the class where the main air inlet is fixed is that on page 325. (423,214, Mar. 11, 1890, Butler.) Here the main air enters through a spring loaded automatic valve while the fuel enters in an annular stream around the outside of the seat of the main valve where the velocity is high. Compensation is secured by air flow to the fuel passage at a point just behind its outlet. Another case involving the same principle of compensation, but differently arranged, is that on page 325. (802,038, Oct. 17, 1905, Hagar.) A more recent case, and one of some interest, is that on page 325 (1,061,835, May 13, 1913, Gobbi), where the fuel inlet is set before the one valve that acts as air valve or throttle. This valve has a hole in it registering with the fuel inlet for idling on closed throttle, air for which enters through a side hole in the throttle itself. On opening the throttle suddenly part of the large air flow is caught by a hood and directed down a shroud tube around the nozzle, emptying it of fuel that collected during slow feed. This accelerating cup action is followed by a mixture proportionality compensating action when this same air enters the fuel nozzle through which the accelerating cup was filled.

No. 751,434 PATENTED FEB. 2, 1904.
M. S. NAPIER & A. J. ROWLEDGE.
CARBURETER FOR PETROL MOTORS.

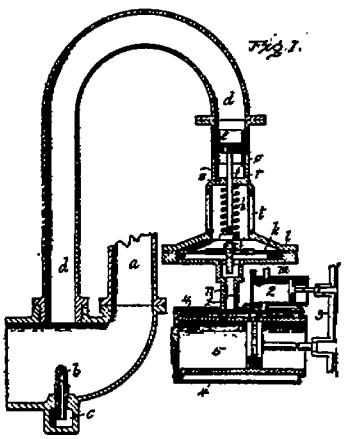

Witnesses: Inventors: M. S. Napier, A. J. Rowledge, by Munch & Munch, Attorneys.

No. 751,434 PATENTED FEB. 2, 1904.
M. S. NAPIER & A. J. ROWLEDGE.
CARBURETER FOR PETROL MOTORS.

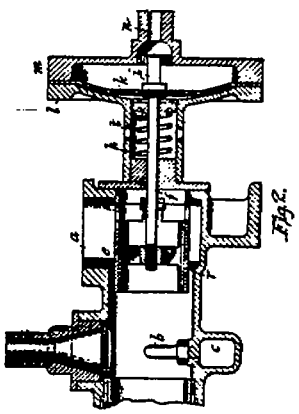

Witnesses: Inventors: M. S. Napier, A. J. Rowledge, by Munch & Munch, Attorneys.

No. 751,434 PATENTED FEB. 2, 1904.
M. S. NAPIER & A. J. ROWLEDGE.
CARBURETER FOR PETROL MOTORS.

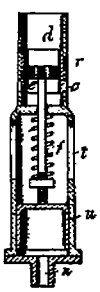

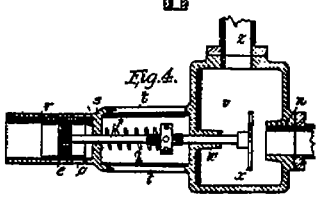

Witnesses: Inventors: M. S. Napier, A. J. Rowledge, by Munch & Munch, Attorneys.

No. 758,555. PATENTED AUG. 7, 1904.
A. W. & W. K. MINNS.
CARBURETER.

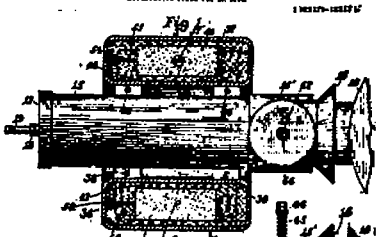

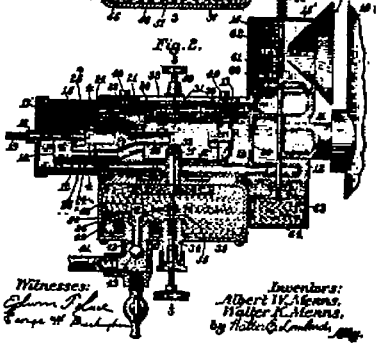

Witnesses: Inventors: Albert W. Minns, Walter K. Minns, by Walter C. Lombard, Atty.

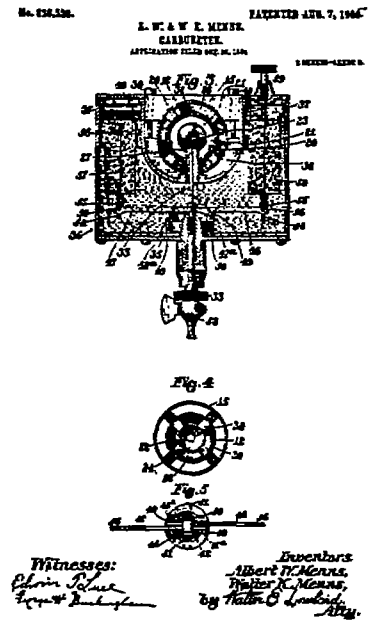
PATENTED APR. 7, 1903
A. W. & W. E. MENNS.
CARBURETER.
Fig. 3
Fig. 4
Fig. 5
Witnesses:
Inventors
Albert W. Menns,
Walter E. Menns,
by Walter C. Lombard,
Atty.

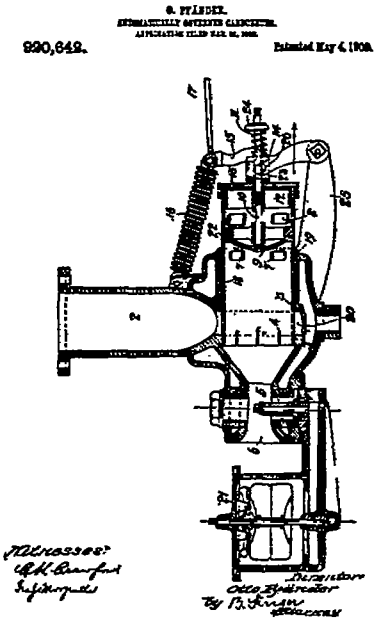
O. FRADER.
930,642.
Patented May 4, 1909.
Inventor
Otto Frader
By B. Swan
Attorney

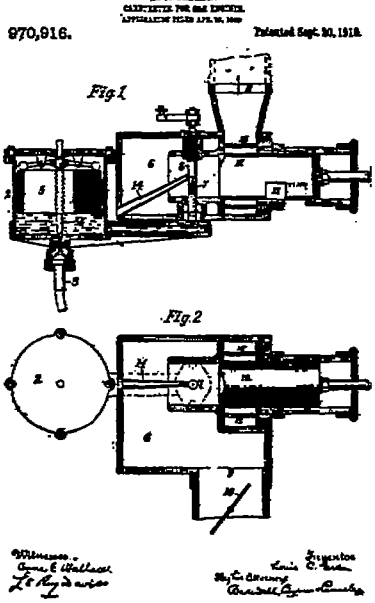
L. C. GREEN.
970,916.
Patented Sept. 20, 1910.
Fig. 1
Fig. 2

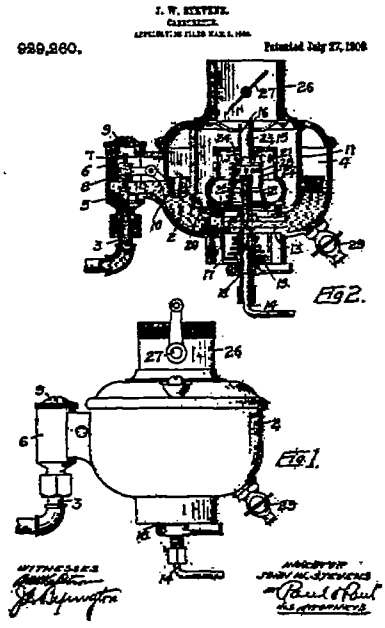
J. W. STEVENS.
CARBURETOR.
929,260.
Patented July 27, 1909
Fig 2.
Fig 1.

E. MAYNARD.
CARBURETER.
APPLICATION FILED SEPT. 17, 1910.

1,001,969. Patented Aug. 29, 1911.

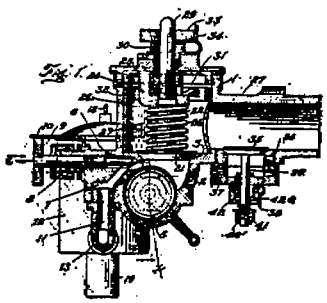

Witnesses
Edwin W. Griffin
A. M. Bond

Inventor
Lemuel Maynard
By Charles H. Duell
Attorney

E. MAYNARD.
CARBURETER.
APPLICATION FILED SEPT. 17, 1910.

1,001,969. Patented Aug. 29, 1911.

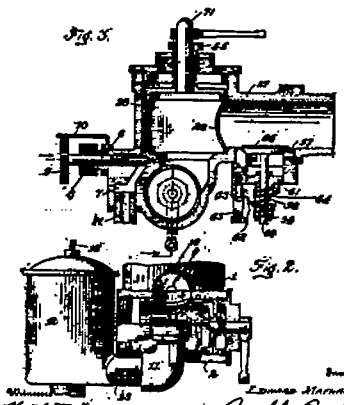

Witnesses
Edwin W. Griffin
A. M. Bond

Inventor
Lemuel Maynard
By Charles H. Duell
Attorney

C. O. BULOCK.
CARBURETER.
APPLICATION FILED APR. 7, 1908.

1,019,126. Patented Mar. 5, 1912.

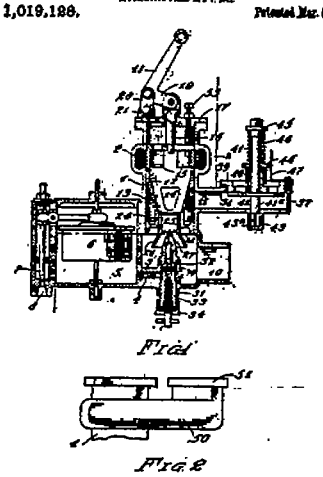

Witnesses
Emmanuel Dodt
W. S. Tils

Inventor
Charles O. Bulock
By Hull & Brumbaugh
Attorneys

W. F. SCHULZ.
CARBURETER.
APPLICATION FILED SEPT. 11, 1909.

1,030,069. Patented Mar. 12, 1912.

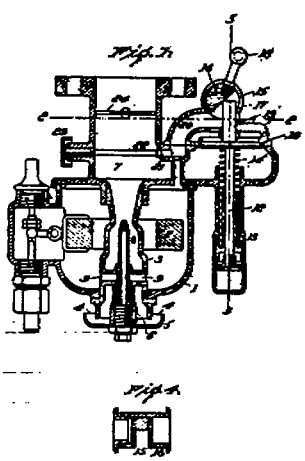

Witnesses
Edwin W. Griffin
Edward F. Brown

Inventor
W. F. Schulz, Deceased
By Lucius Orr Brown
Executor
Chas. H. Duell
Attorney

W. F. SCHULZ.
CARBURETOR.
APPLICATION FILED SEPT. 18, 1908.
Patented Mar. 12, 1912.
1,020,059.

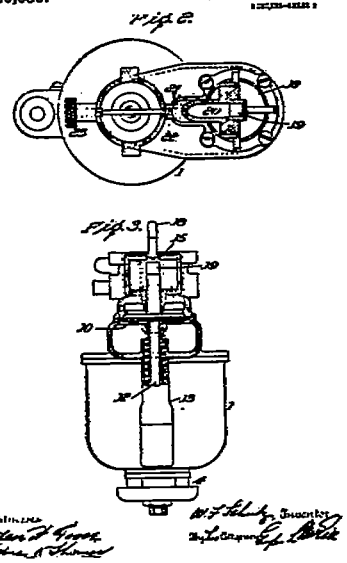

A. H. CLAUDEL.
CARBURETOR.
APPLICATION FILED APR. 20, 1907.
Patented Sept. 16, 1913.
1,073,473.

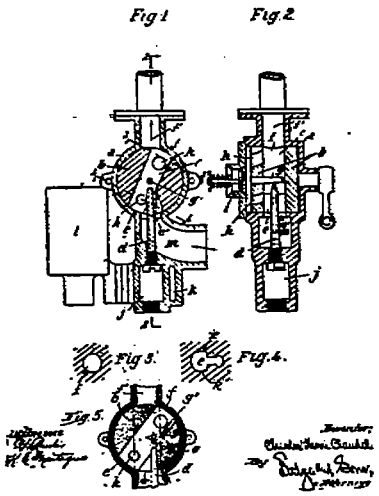

T. S. HAMILTON.
CARBURETOR.
APPLICATION FILED APR. 4, 1913.
Patented June 2, 1914.
1,099,086.

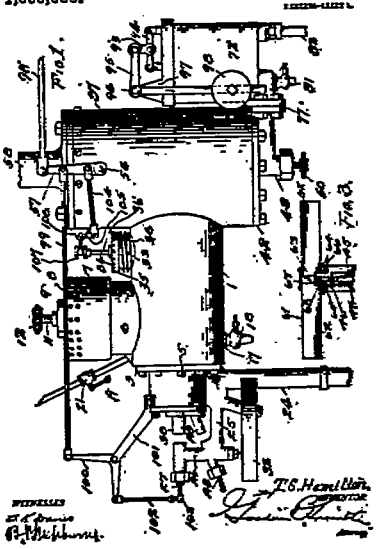

T. S. HAMILTON.
CARBURETOR.
APPLICATION FILED APR. 4, 1913.
Patented June 2, 1914.
1,099,086.

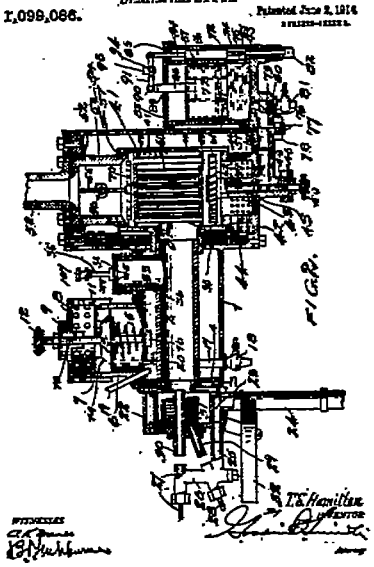

G. A. F. AHLBERG.
CARBURETER.
APPLICATION FILED SEPT. 16, 1910.

1,104,762. Patented July 28, 1914.

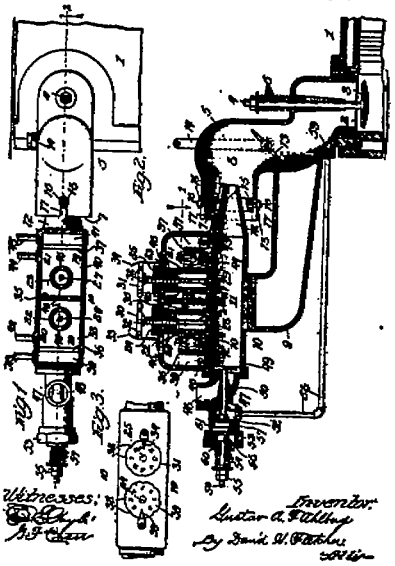

T. W. KITON.
CARBURETER.
APPLICATION FILED SEPT. 10, 1913.

1,119,757. Patented Dec. 1, 1914.

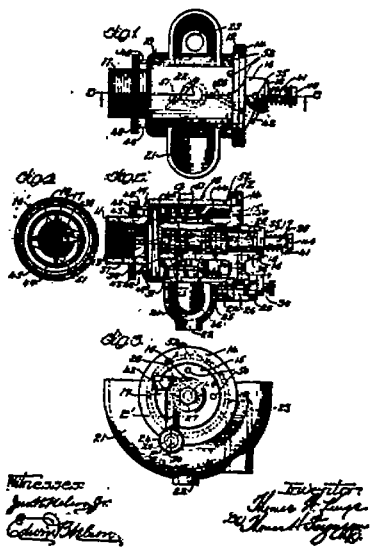

C. W. HARTBERGER.
CARBURETER.
APPLICATION FILED MAY 15, 1916.

1,127,992. Patented Feb. 9, 1915.

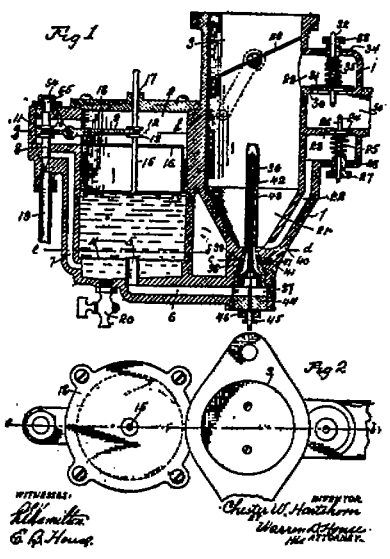

C. W. HARTBERGER.
CARBURETER.
APPLICATION FILED MAY 15, 1916.

1,127,992. Patented Feb. 9, 1915.

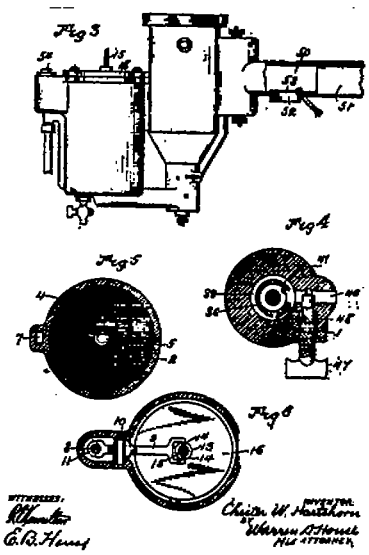

1,123,955. Patented Jan. 5, 1915.

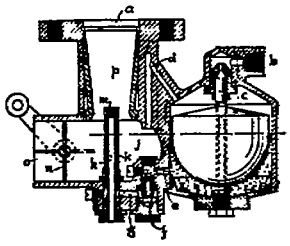

1,137,307. Patented Apr. 27, 1915.

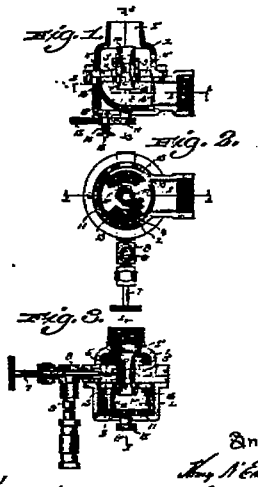

1,151,989. Patented Aug. 31, 1915.

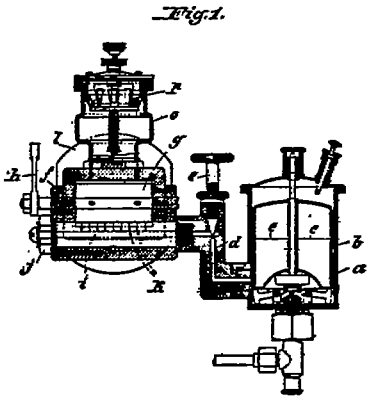

1,151,989. Patented Aug. 31, 1915.

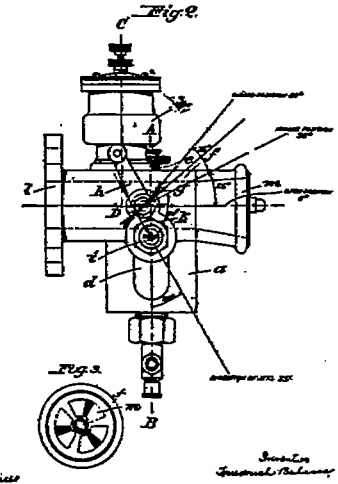

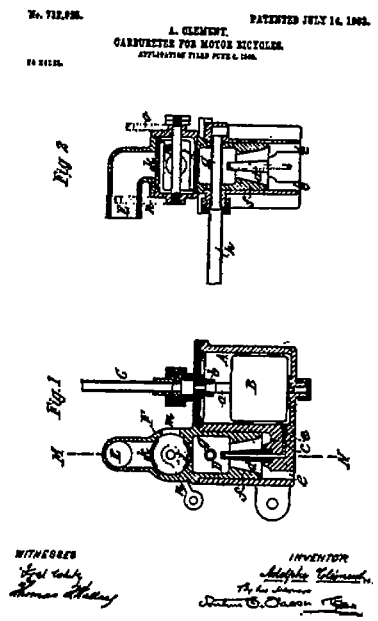
A. CLEMENT.
CARBURETER FOR MOTOR BICYCLES.
Fig. 2
Fig. 1
WITNESSES
INVENTOR

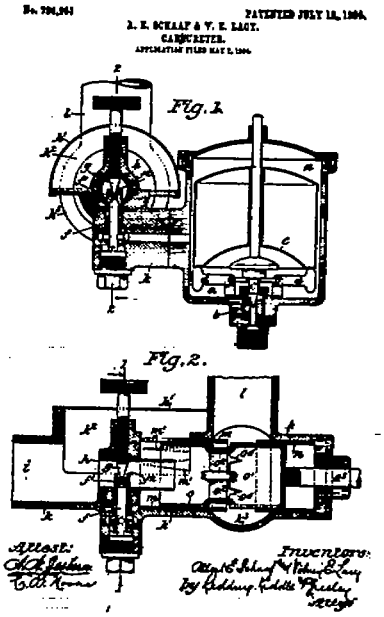
J. E. SCHLAFF & V. E. LACY.
CARBURETER.
Fig. 1.
Fig. 2.
Attest:
Inventors:

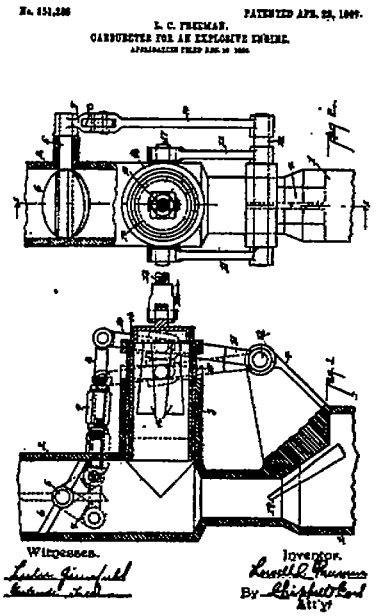
L. C. FREEMAN.
CARBURETER FOR AN EXPLOSIVE ENGINE.
Witnesses.
Inventor.

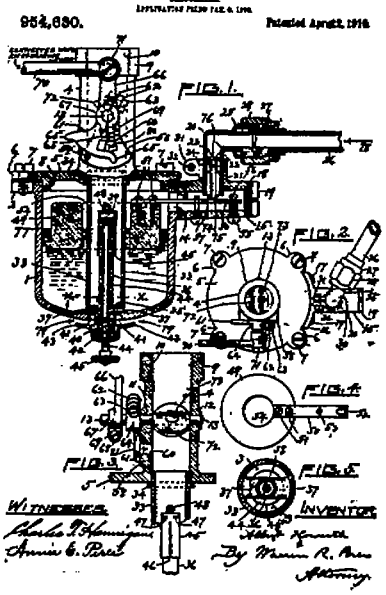
J. HOWARTH.
954,630.
Patented April 12, 1910.
FIG. 1.
FIG. 2.
FIG. 3
FIG. 4
FIG. 5
WITNESSES.
INVENTOR.

1,011,565. Patented Dec. 12, 1911.

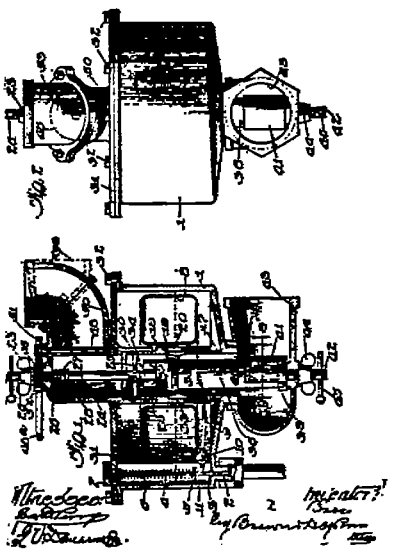

1,011,565. Patented Dec. 12, 1911.

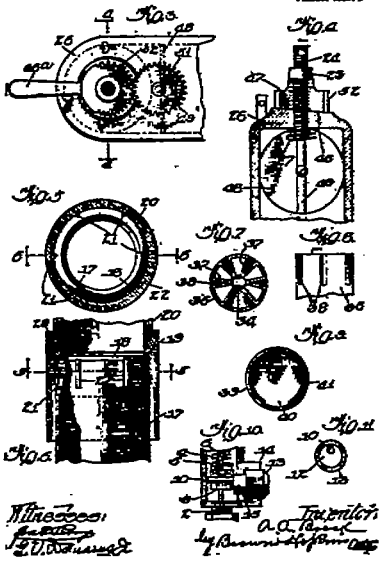

1,060,063. Patented Apr. 29, 1913.

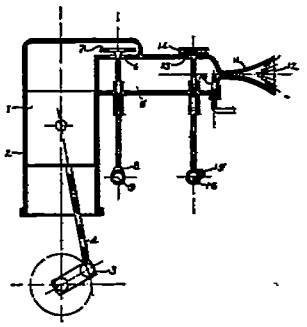

Witnesses
J. Earl Ryan
J. Ellis Glen

Inventor
Otto Winkler
By Albert G. Davis
Atty

1,097,401. Patented May 19, 1914.

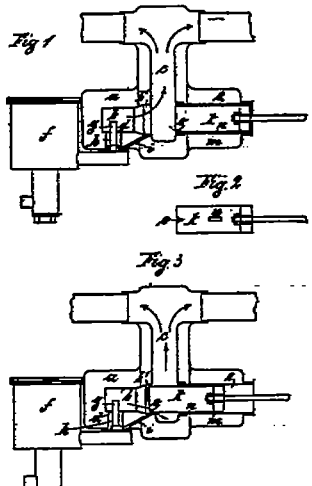

Witnesses
W. E. Mudge

Inventor
The Bendix
By Chas. S. Morris
Atty

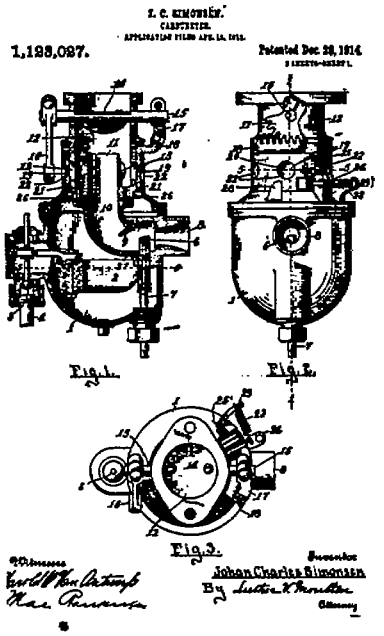
J. C. SIMONSEN.
CARBURETER.
1,123,027.
Patented Dec. 29, 1914.
Fig. 1.
Fig. 2.
Fig. 3.
Witnesses
Inventor
Johan Charles Simonsen
By Lutter & Thornton
Attorneys

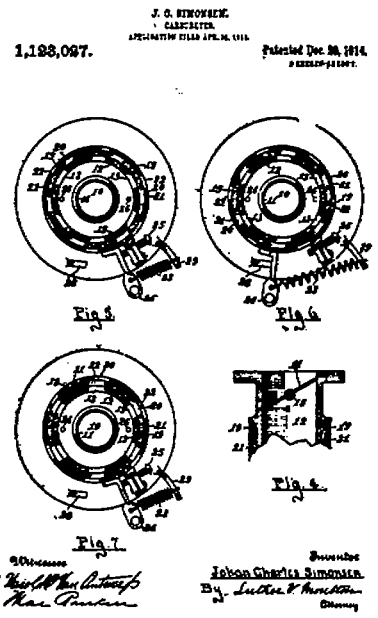
J. C. SIMONSEN.
CARBURETER.
1,123,027.
Patented Dec. 29, 1914.
Fig. 5.
Fig. 6.
Fig. 7.
Fig. 4.
Witnesses
Inventor
Johan Charles Simonsen
By Lutter & Thornton
Attorneys

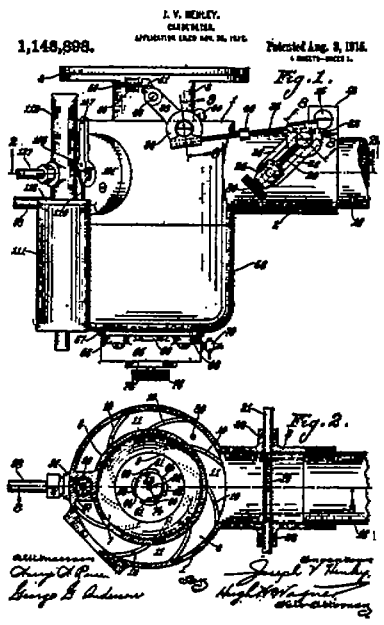
J. V. HENLEY.
CARBURETER.
1,148,898.
Patented Aug. 3, 1915.
Fig. 1.
Fig. 2.
Witnesses
Inventor
Joseph V. Henley
Hugh M. Wagner
Attorney

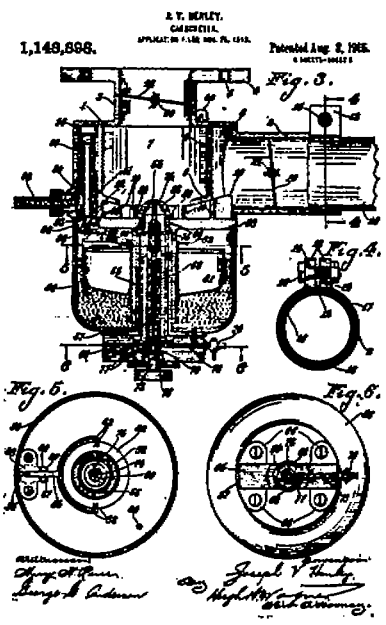
J. V. HENLEY.
CARBURETER.
1,148,898.
Patented Aug. 3, 1915.
Fig. 3.
Fig. 4.
Fig. 5.
Fig. 6.
Witnesses
Inventor
Joseph V. Henley
Hugh M. Wagner
Attorney

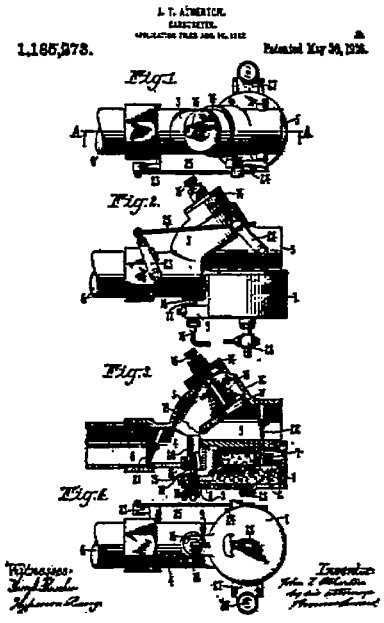
1,185,273.
Fig. 1.
Fig. 2.
Fig. 3.
Fig. 4.

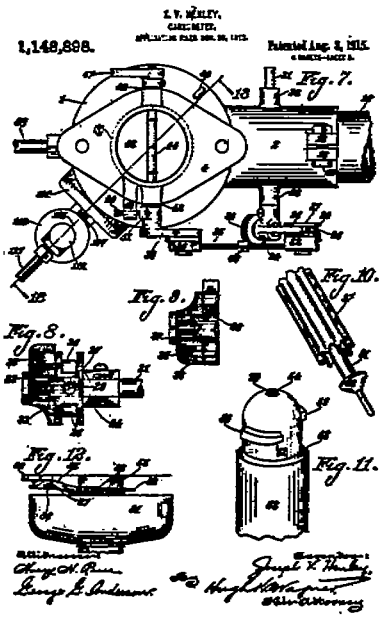
1,148,898.
Fig. 7.
Fig. 8.
Fig. 9.
Fig. 10.
Fig. 11.
Fig. 12.

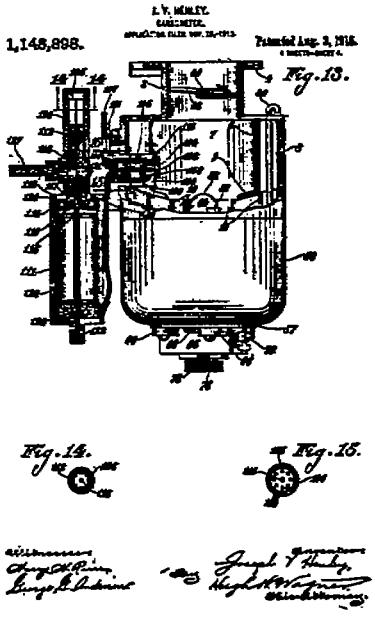
1,148,898.
Fig. 13.
Fig. 14.
Fig. 15.

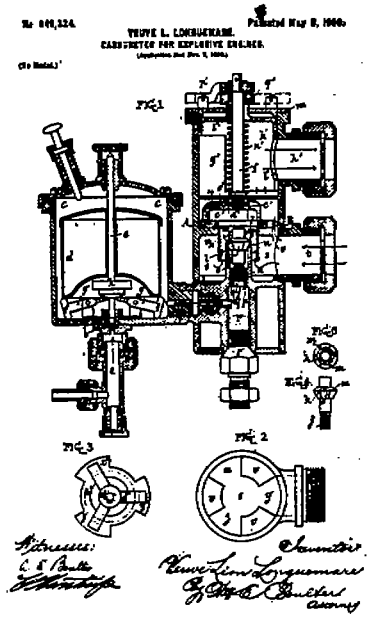
No. 849,324.
Patented May 9, 1906.
THEVE L. LINDEKAME.
CARBURETER FOR EXPLOSIVE ENGINES.
Fig. 1
Fig. 2
Fig. 3
Witnesses:
Inventor

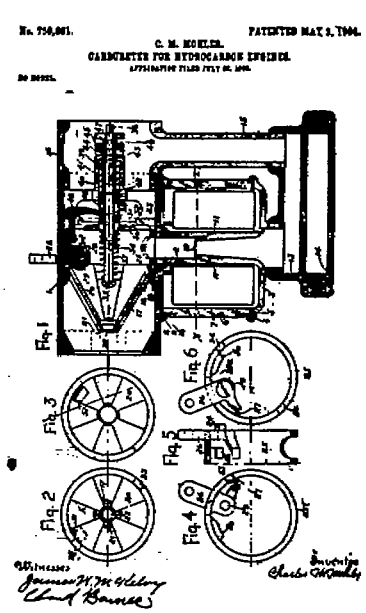
No. 750,061.
PATENTED MAY 3, 1904.
C. M. KOHLER.
CARBURETER FOR HYDROCARBON ENGINES.
Fig. 1
Fig. 2
Fig. 3
Fig. 4
Fig. 5
Fig. 6
Witnesses:
Inventor

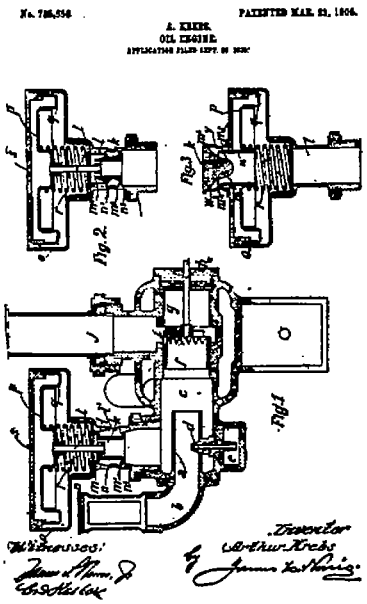
No. 786,556.
PATENTED MAR. 21, 1905.
A. KREBS.
OIL ENGINE.
Fig. 1
Fig. 2
Fig. 3
Witnesses:
Inventor
Arthur Krebs

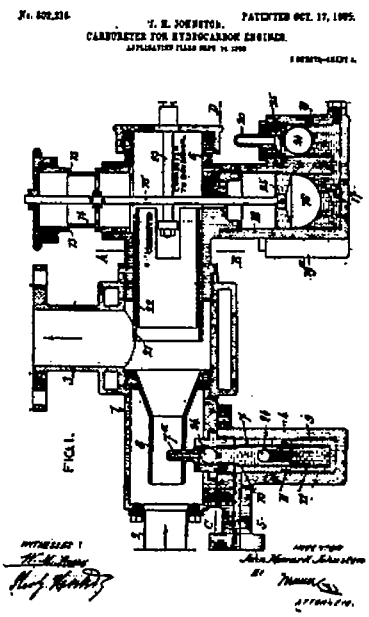
No. 802,216.
PATENTED OCT. 17, 1905.
T. H. JOHNSTON.
CARBURETER FOR HYDROCARBON ENGINES.
FIG. 1.
Witnesses:
Inventor

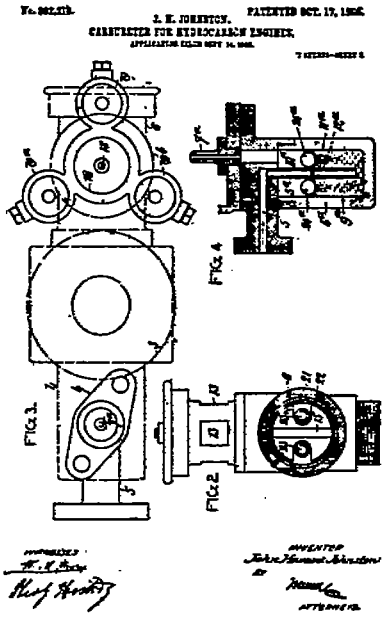
J. H. JOHNSTON.
CARBURETER FOR HYDROCARBON ENGINES.
FIG. 1.
FIG. 2
FIG. 4

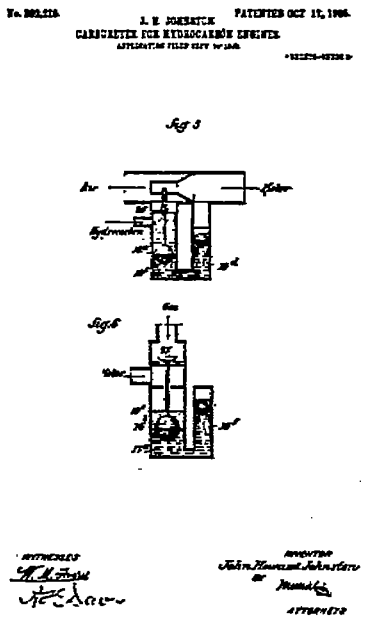
J. H. JOHNSTON
CARBURETER FOR HYDROCARBON ENGINES.
Fig 3
Fig 5

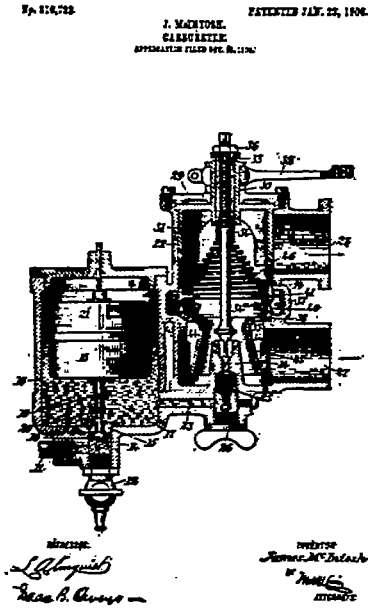
J. MACINTOSH.
CARBURETER.

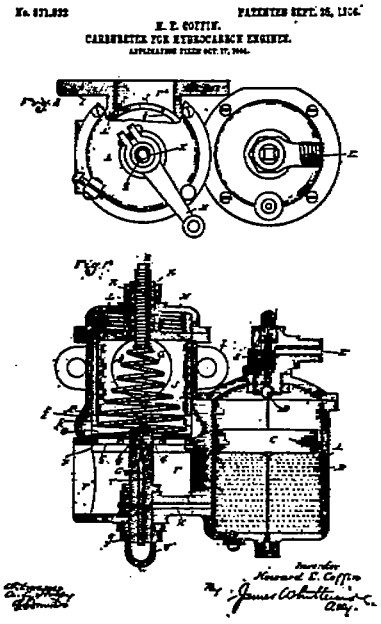
H. P. COFFIN.
CARBURETER FOR HYDROCARBON ENGINES.
Fig 1
Fig 2

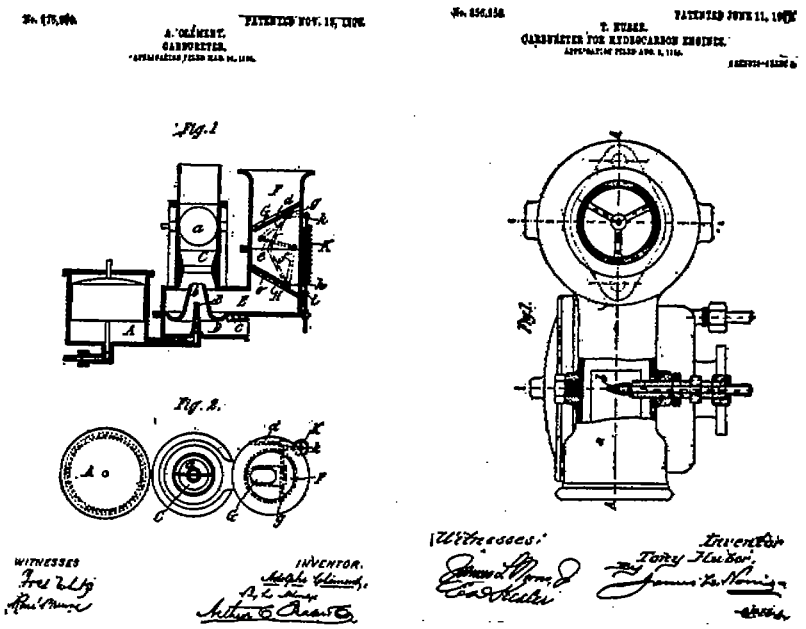
A. CLEMENT.
CARBURETER.
T. HUBER.
CARBURETER FOR HYDROCARBON ENGINES.
Fig. 1
Fig. 2
WITNESSES
INVENTOR.
Witnesses:
Inventor
Tony Huber

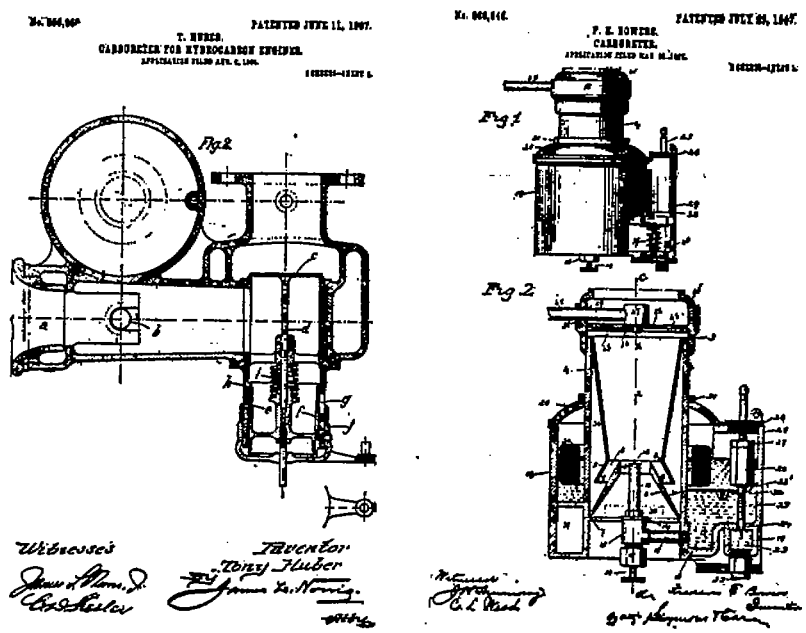
T. HUBER.
CARBURETER FOR HYDROCARBON ENGINES.
Fig 2
Witnesses
Inventor
Tony Huber
F. E. SOWERS.
CARBURETER.
Fig 1
Fig 2

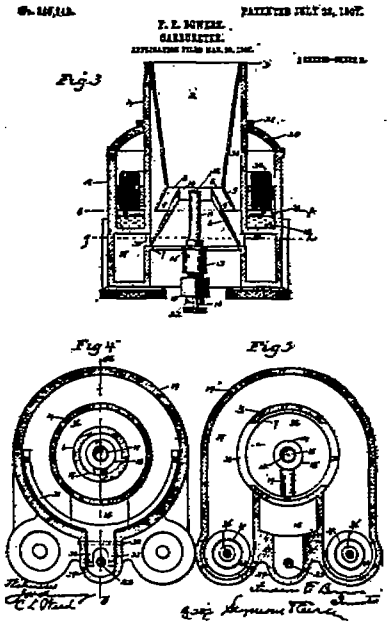
Fig 3
Fig 4
Fig 5

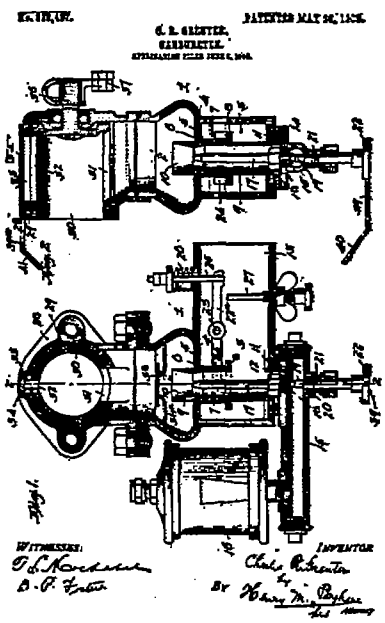
Fig 1.
Witnesses:
Inventor

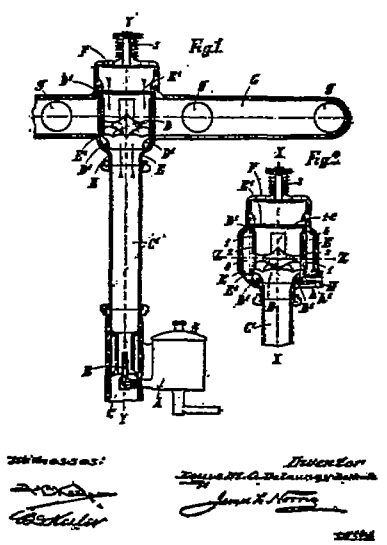
Fig 1
Fig 2
Witnesses:
Inventor

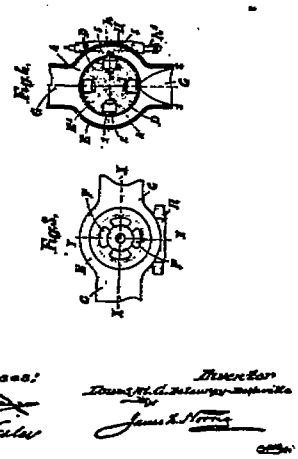
Fig 4
Fig 5
Witnesses:
Inventor

W. A. DALEY.
CARBURETER FOR INTERNAL COMBUSTION ENGINES.
APPLICATION FILED MAR. 27, 1906.

912,089. Patented Feb. 9, 1909.

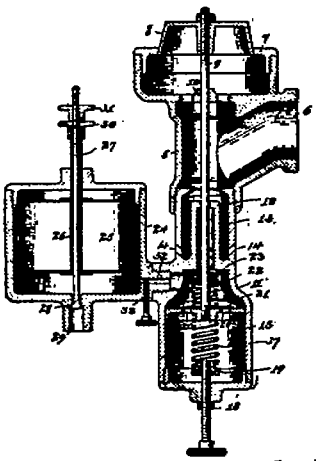

Witnesses,
E. N. Funk.

Inventor,
Walter A. Daley.
By Offield, Towle & Lothrop
Atty.

H. T. HARRINGTON.
CARBURETER.
APPLICATION FILED FEB. 22, 1906.

927,589. Patented July 13, 1909.

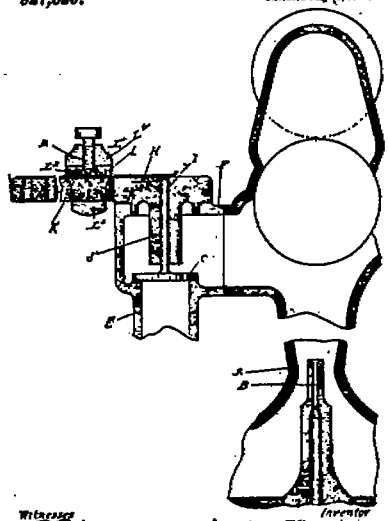

Witnesses
James A. Berry

Inventor
Herman T. Harrington
By Williams, Bradbury & Williams
Atty.

J. S. GOLDBERG.
CARBURETER.
APPLICATION FILED FEB. 2, 1906.

928,042. Patented July 13, 1909.
4 SHEETS—SHEET 1.

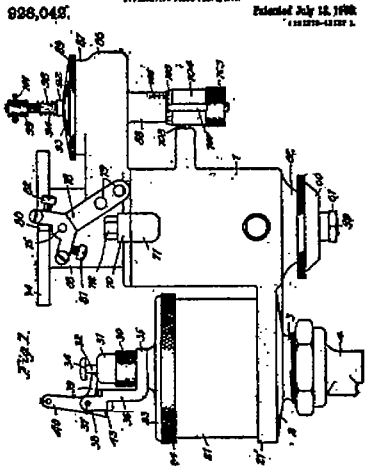

Witnesses:
Lenard W. Reynolds
Charles J. Schmidt

Inventor
John S. Goldberg
By Brown & Williams
Attorneys.

J. S. GOLDBERG.
CARBURETER.
APPLICATION FILED FEB. 2, 1906.

928,042. Patented July 13, 1909.
4 SHEETS—SHEET 2.

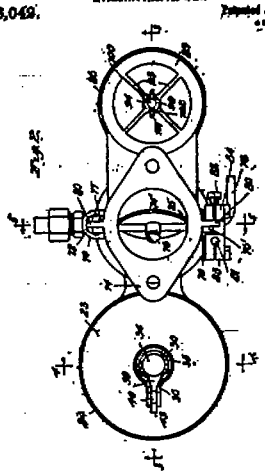

Witnesses:
Lenard W. Reynolds
Charles J. Schmidt.

Inventor
John S. Goldberg
By Brown & Williams
Attorneys.

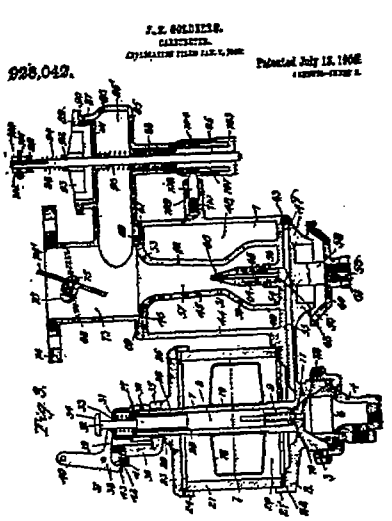

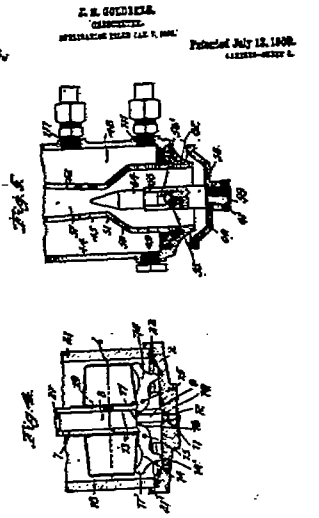

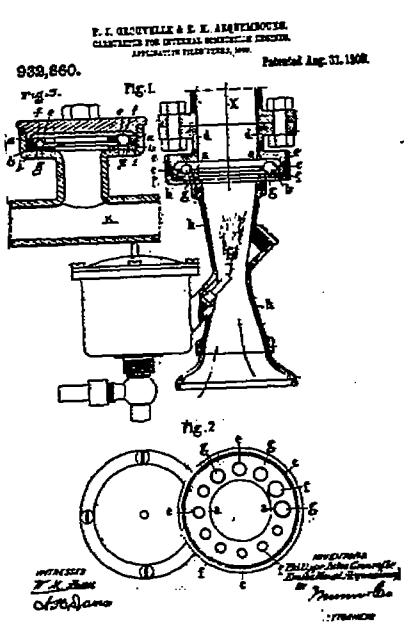

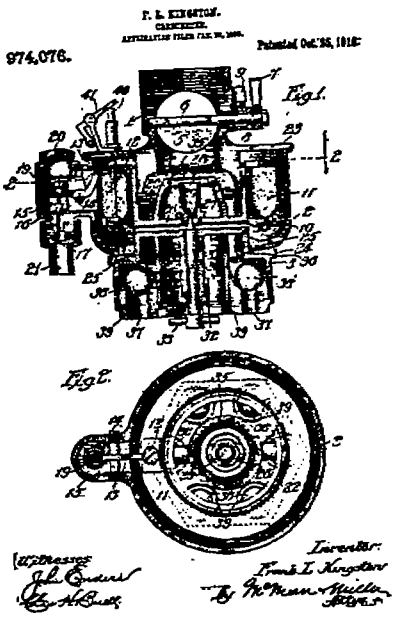

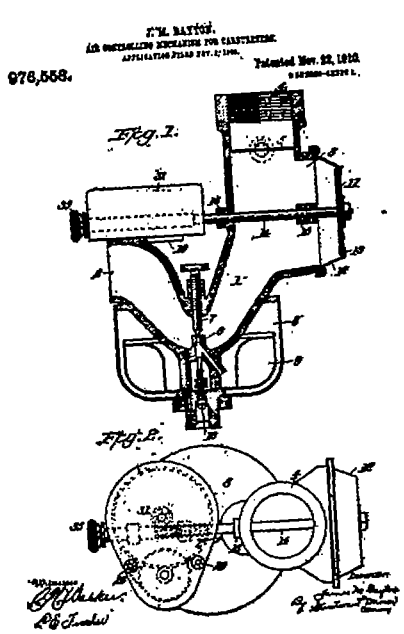
J. M. BATTIN.
976,558.
Fig. 1.
Fig. 2.

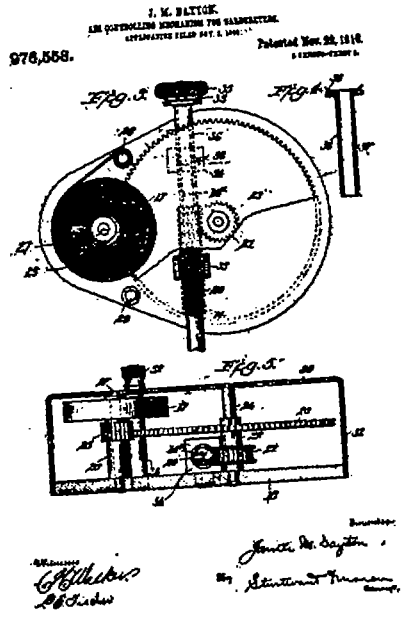
J. M. BATTIN.
976,558.
Fig. 3.
Fig. 4.
Fig. 5.

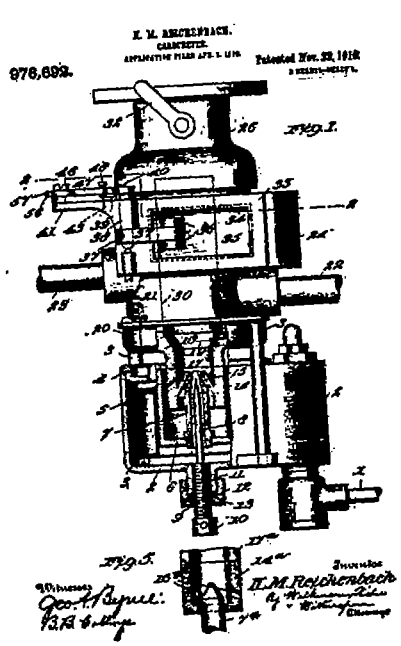
H. M. REICHENBACH.
976,692.
Fig. 1.
Fig. 5.

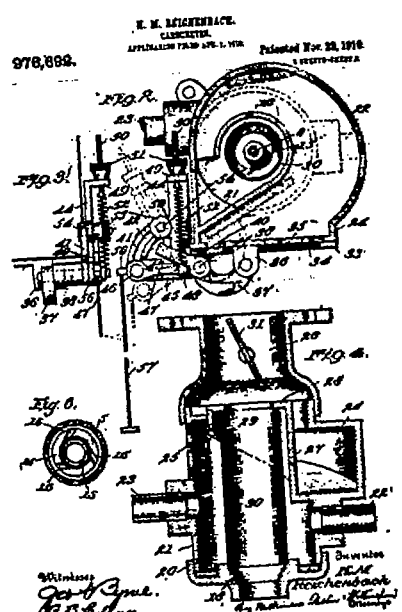
H. M. REICHENBACH.
976,692.
Fig. 2.
Fig. 3.
Fig. 4.
Fig. 6.

F. E. BOWIES.
CARBURETER.
APPLICATION FILED JAN. 13, 1906.

997,933. Patented July 4, 1911.
1 SHEET-SHEET 1.

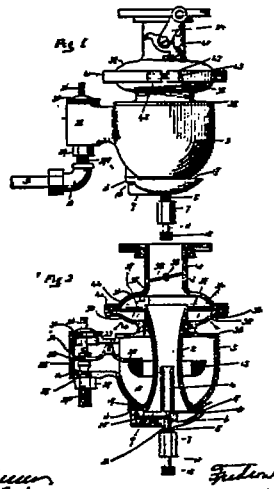

Witnesses
C. E. Read
C. L. Neal

Frederick E. Bowies
Inventor
by Heyman & Berry
Atty.

F. E. BOWIES.
CARBURETER.
APPLICATION FILED JAN. 13, 1906.

997,933. Patented July 4, 1911.
1 SHEET-SHEET 2.

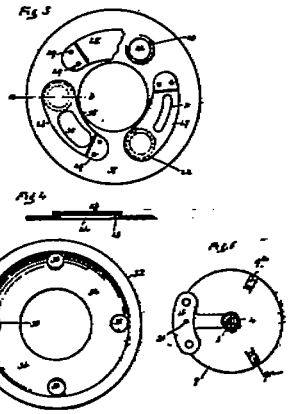

Witnesses
C. E. Read
C. L. Neal

Frederick E. Bowies
Inventor
by Heyman & Berry
Atty.

A. E. BRUNE.
CARBURETER.
APPLICATION FILED APR. 16, 1904.

Patented Aug. 4, 1914. 13,784.

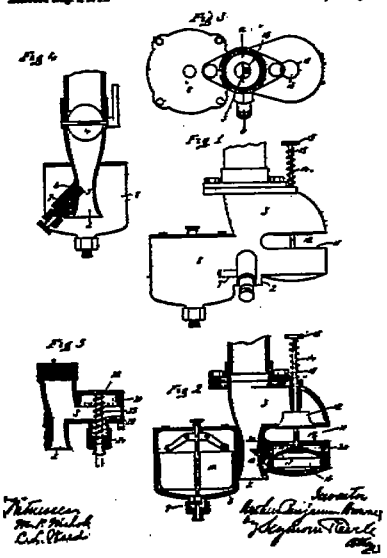

Witnesses
M. F. Welch
C. L. Neal

Inventor
Adolf Benjamin Brune
by Stephens & Neal
Atty.

A. E. BRUNE.
CARBURETER.
APPLICATION FILED JAN. 16, 1906.

1,069,671. Patented Aug. 12, 1913.
1 SHEET-SHEET 1.

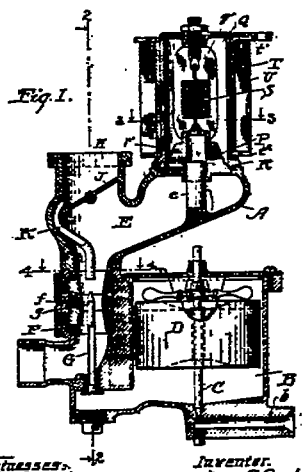

Witnesses:
E. B. Fletcher
H. B. Sullivan.

Inventor.
Aaron A. Brune
by E. L. Thurston
Attorney.

A. P. BEDER.
CARBURETER.
APPLICATION FILED JAN. 18, 1910.

1,069,671. Patented Aug. 12, 1913.

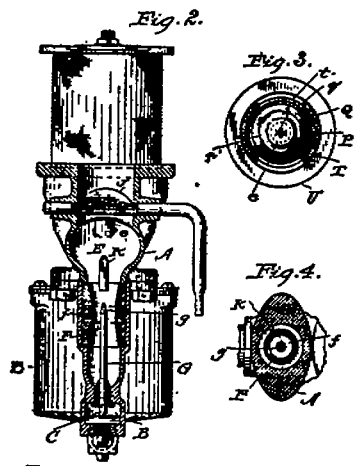

Witnesses:
E. R. Ehrhard
H. R. Sullivan.

Inventor
Aaron P. Beder
by E. L. Thurston
Attorney

F. E. & F. G. BALL.
CARBURETER.
APPLICATION FILED JAN. 16, 1912.

1,071,856. Patented Sept. 2, 1913.

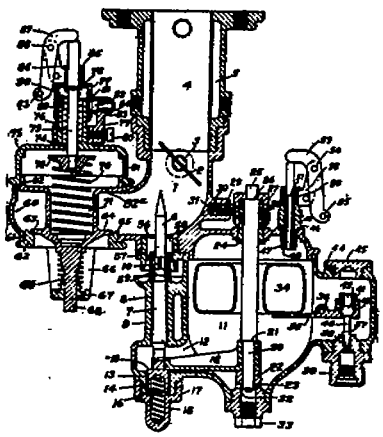

Witnesses
C. M. Hartmann
Henry H. Ewen

Inventor
Frank E. & Frank G. Ball
by H. L. Ewald
Attorney

P. GERMANN
CARBURETER.
APPLICATION FILED FEB. 11, 1910.

1,086,287. Patented Feb. 3, 1914.

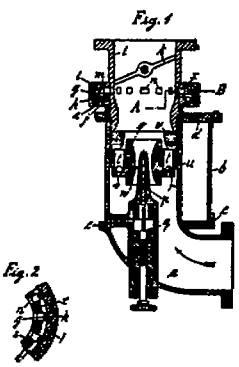

Witness
M. E. K.
Geo. Stamp

Inventor
Paul Germann

W. T. MISSELL
CARBURETER.
APPLICATION FILED APR. 16, 1912.

1,092,989. Patented Apr. 7, 1914.

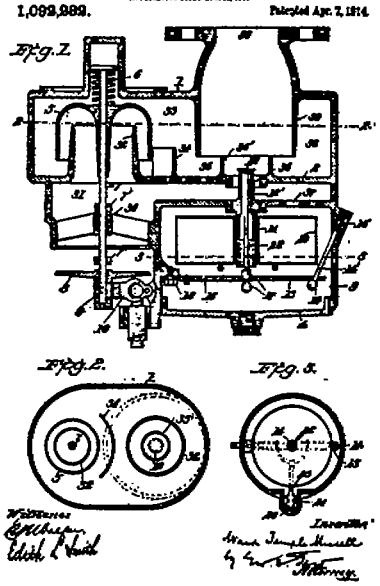

Witnesses
E. M. Chapman
Edith L. Ewald

Inventor
Wm. Temple Missell
by E. L. Thurston
Attorney

A. P. BRUSH

1,112,257 Patented Sept. 29, 1914.

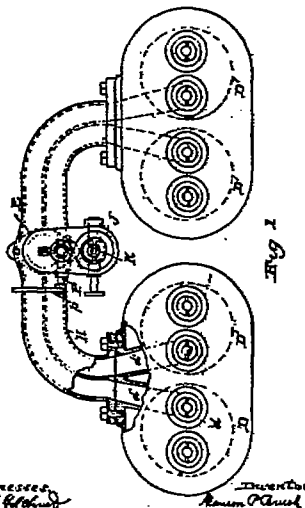

Fig. 1

Witnesses
E. B. Gilchrist
H. L. Sullivan

Inventor
Hermon O. Crouch
by Thornton Wise
Attorney

A. P. BRUSH

1,112,257 Patented Sept. 29, 1914.

Fig. 2

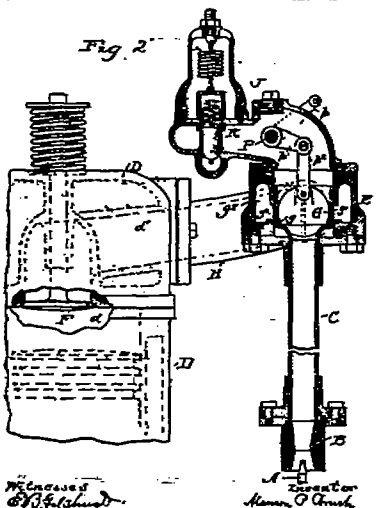

Witnesses
E. B. Gilchrist
H. L. Sullivan

Inventor
Hermon O. Crouch
by Thornton Wise
Attorney

H. L. BAKESTRAW

1,140,064. Patented May 18, 1915.

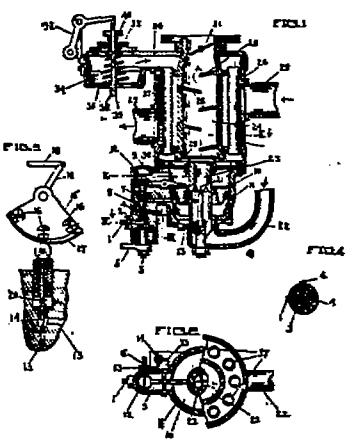

Witnesses
C. H. Rauch
Geo. F. Jenness

Hermon L. Bakestraw
Inventor
Attorney

C. B. HAYNES

1,143,861. Patented June 22, 1915.

Fig. 1

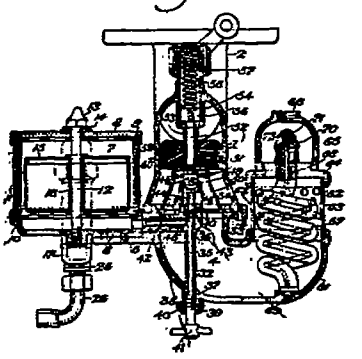

Witnesses
Geo. F. Nagel
H. L. Sullivan

Charles B. Haynes
Inventor
Wilmot R. Castle
Attorney

C. E. KAYNER.
CARBURETER.
APPLICATION FILED MAR. 29, 1915.

1,148,951. Patented June 22, 1915.

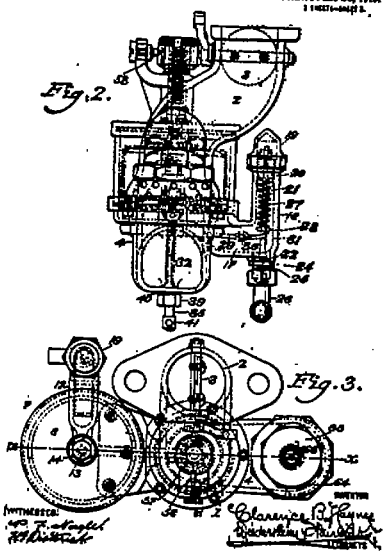

F. M. PERCIVAL & W. PATTERSON.
KEROSENE CARBURETER.
APPLICATION FILED MAY 6, 1915.

1,150,619. Patented Aug. 17, 1915.

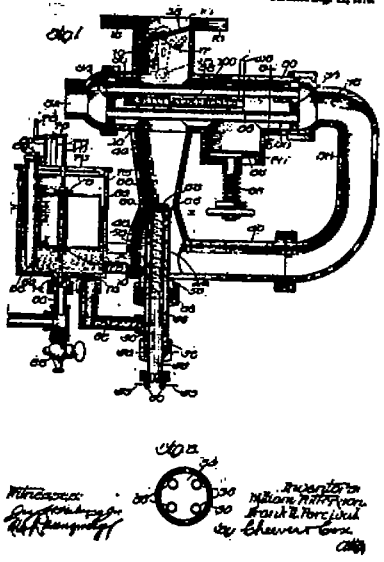

F. DAIMLER & R. BLAST.
THROTTLE VALVE FOR CARBURETERS.
APPLICATION FILED JAN. 14, 1915.

1,162,576. Patented Nov. 30, 1915.

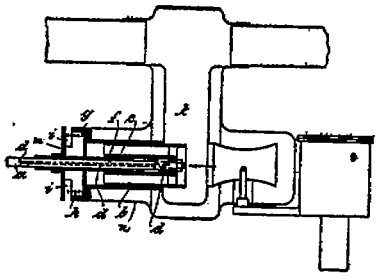

Witnesses:
Emil Kayser.

Inventors
Attorney.

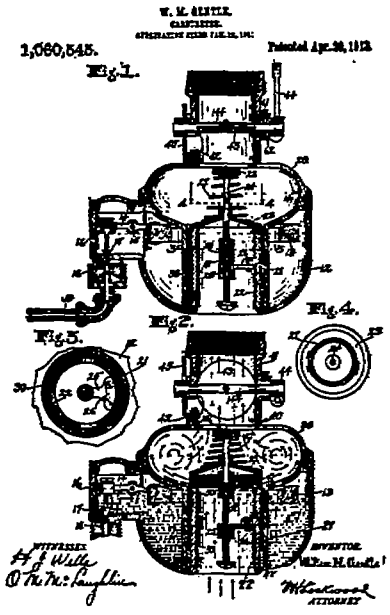
1,060,545.
Fig. 1.
Fig. 2.
Fig. 3.
Fig. 4.
Witnesses
Inventor
Attorney

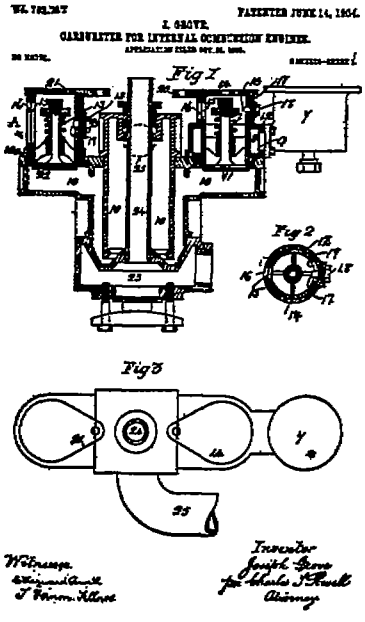
Fig 1
Fig 2
Fig 3
Witnesses
Inventor
Attorney

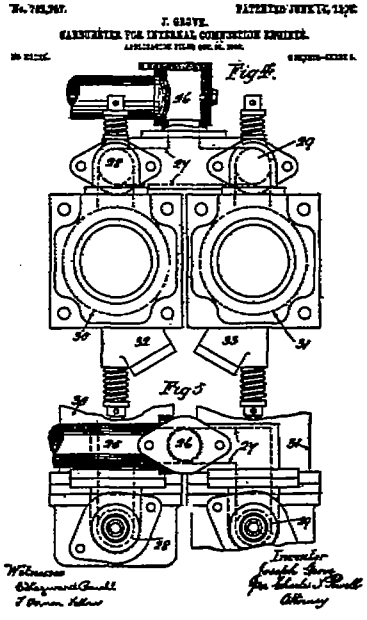
Fig 4
Fig 5
Witnesses
Inventor
Attorney

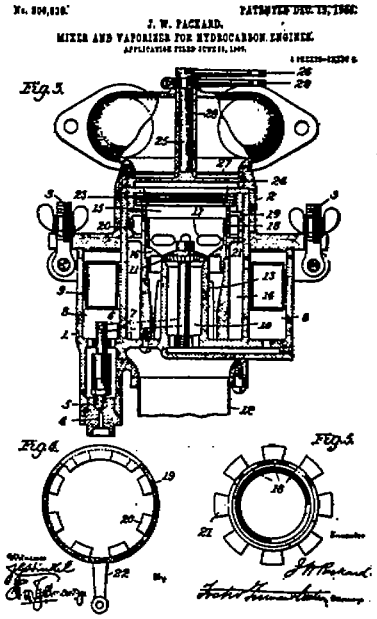
No. 806,516. PATENTED DEC. 12, 1905.
J. W. PACKARD.
MIXER AND VAPORIZER FOR HYDROCARBON ENGINES.
Fig. 5.
Fig. 4.
Fig. 5.

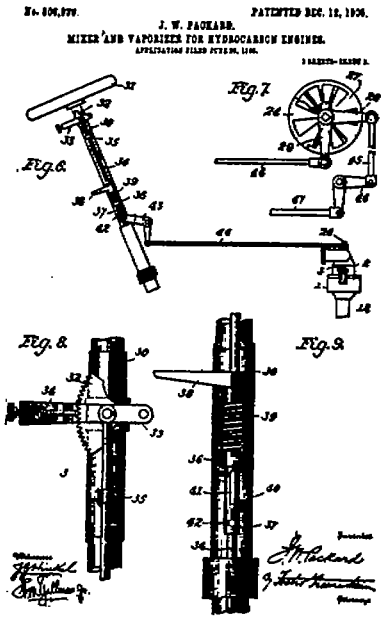
No. 806,516. PATENTED DEC. 12, 1905.
J. W. PACKARD.
MIXER AND VAPORIZER FOR HYDROCARBON ENGINES.
Fig. 6.
Fig. 7.
Fig. 8.
Fig. 9.

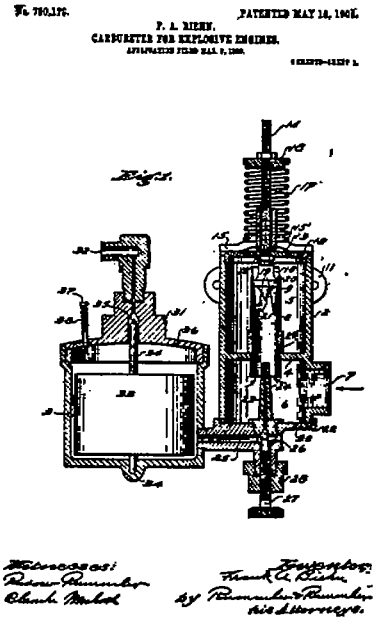
No. 790,175. PATENTED MAY 16, 1905.
F. A. RIEBE.
CARBURETER FOR EXPLOSIVE ENGINES.
Fig. 1.
Witnesses:
Inventor:
By Pennie & Pennie
his Attorneys.

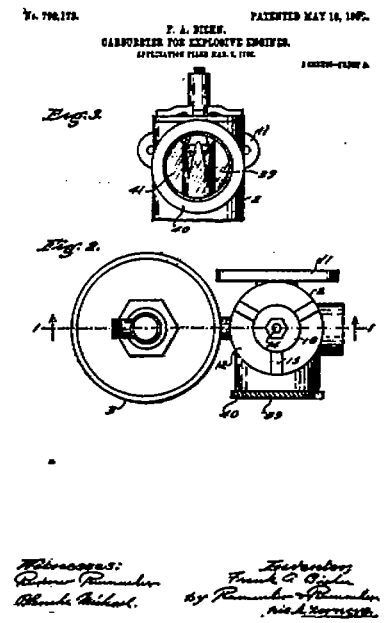
No. 790,175. PATENTED MAY 16, 1905.
F. A. RIEBE.
CARBURETER FOR EXPLOSIVE ENGINES.
Fig. 3.
Fig. 2.
Witnesses:
Inventor:
By Pennie & Pennie
his Attorneys.

1,183,187.

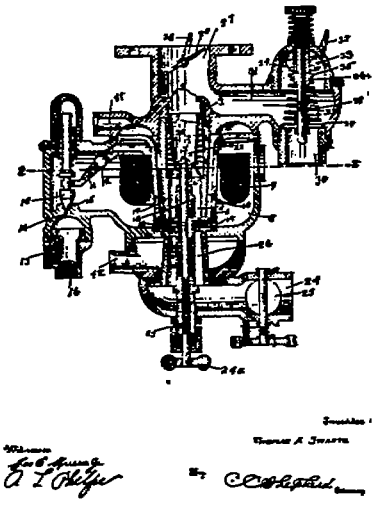

1,186,675.

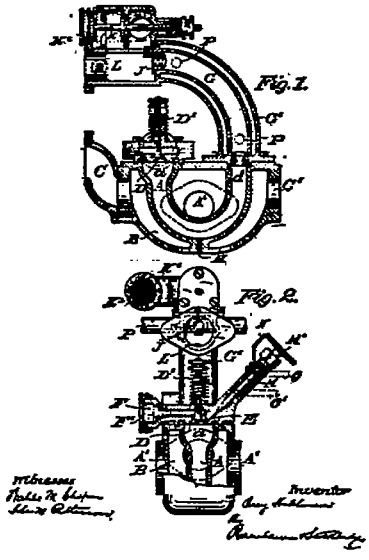

960,060.

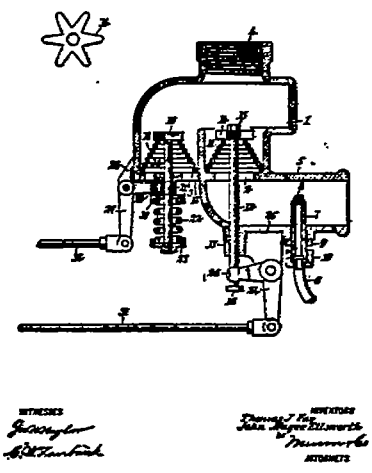

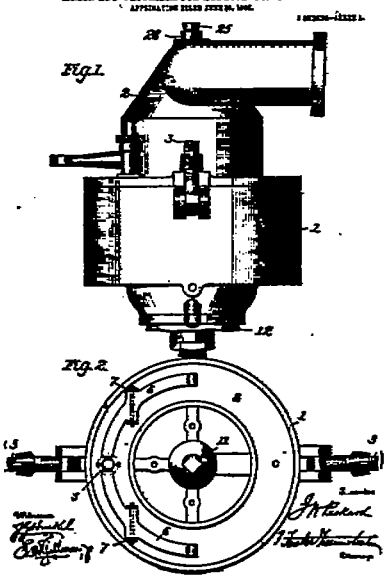

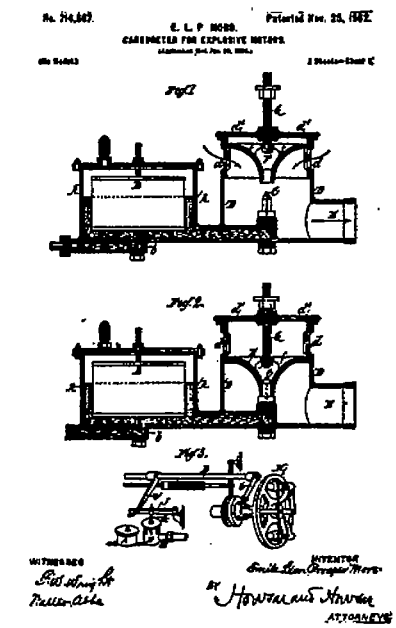
No. 714,347.
Patented Nov. 25, 1902.
E. L. P. MOSS.
CARBURETER FOR EXPLOSIVE MOTORS.
Fig. 1.
Fig. 2.
Fig. 3.
WITNESSES
INVENTOR
BY
ATTORNEYS

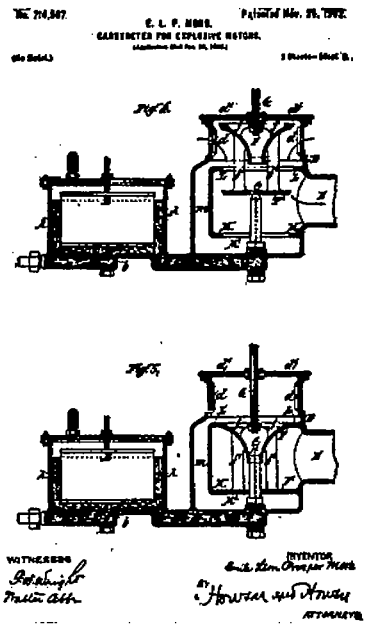
No. 714,347.
Patented Nov. 25, 1902.
E. L. P. MOSS.
CARBURETER FOR EXPLOSIVE MOTORS.
Fig. 4.
Fig. 5.
WITNESSES
INVENTOR
BY
ATTORNEYS

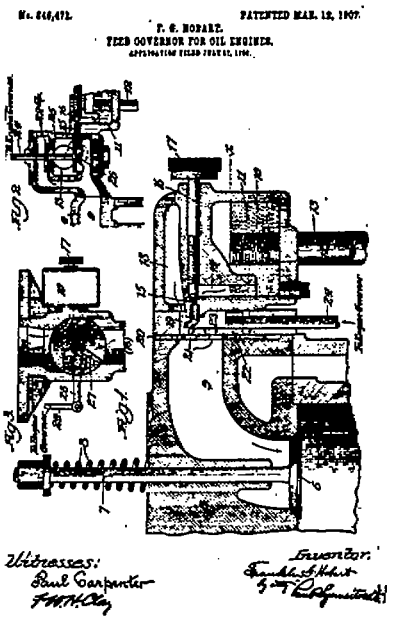
No. 846,472.
PATENTED MAR. 12, 1907.
P. G. MOHART.
FEED GOVERNOR FOR OIL ENGINES.
Witnesses:
Paul Carpenter
Inventor:

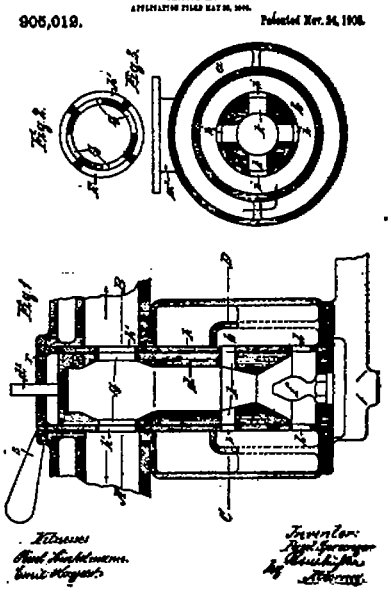
P. SPRANGER.
CARBURETER.
905,012.
Patented Nov. 24, 1908.
Fig. 1
Fig. 2
Fig. 3
Witnesses
Inventor:

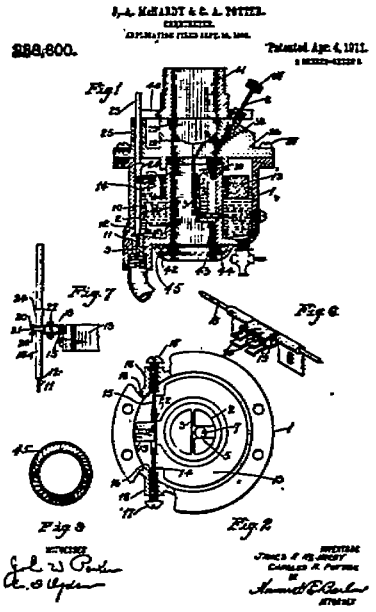
J. A. McHARDY & C. A. POTTER.
988,800.
Patented Apr. 4, 1911.
Fig 1
Fig 2
Fig 3
Fig 4
Fig 5
Fig 6
Fig 7
Fig 8

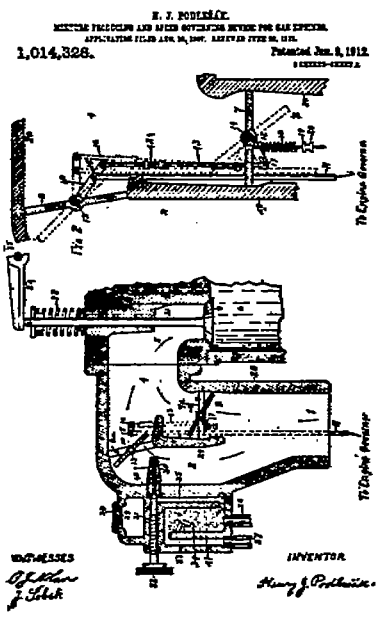
H. J. PODLESÁK.
1,014,328.
Patented Jan. 9, 1912.
Fig 2
WITNESSES
INVENTOR

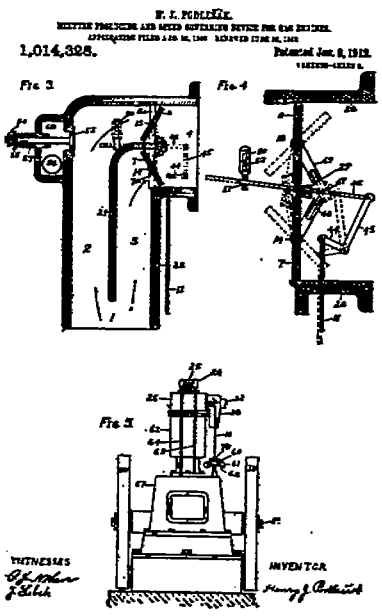
H. J. PODLESÁK.
1,014,328.
Patented Jan. 9, 1912.
Fig 3
Fig 4
Fig 5
WITNESSES
INVENTOR

H. J. PODLESAK.

MIXTURE PRODUCING AND SPEED GOVERNING DEVICE FOR GAS ENGINES.

APPLICATION FILED AUG. 10, 1907. RENEWED JUNE 16, 1911.

1,014,828. Patented Jan. 9, 1912.

5 SHEETS—SHEET 3.

FIG. 6.

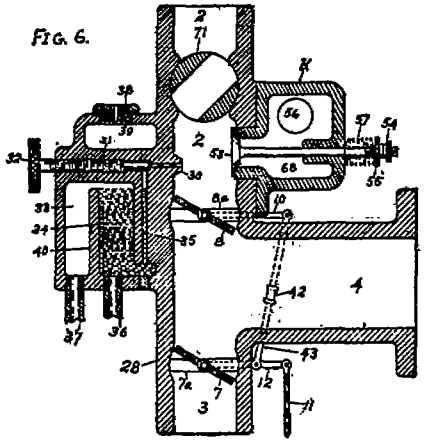

WITNESSES
James A. Fuller
Emil Podlesak

INVENTOR
Henry J. Podlesak

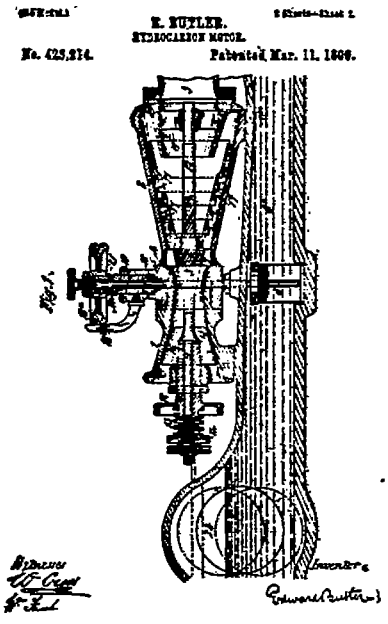
E. BUTLER.
HYDROCARBON MOTOR.
No. 425,214.
Patented Mar. 11, 1890.
Fig. 1.
Witnesses
Inventor

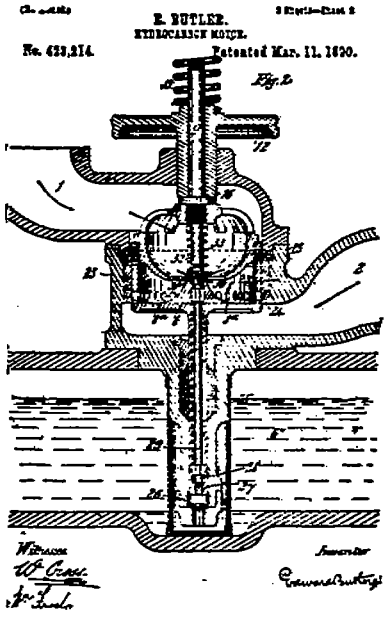
E. BUTLER.
HYDROCARBON MOTOR.
No. 425,214.
Patented Mar. 11, 1890.
Fig. 2.
Witnesses
Inventor

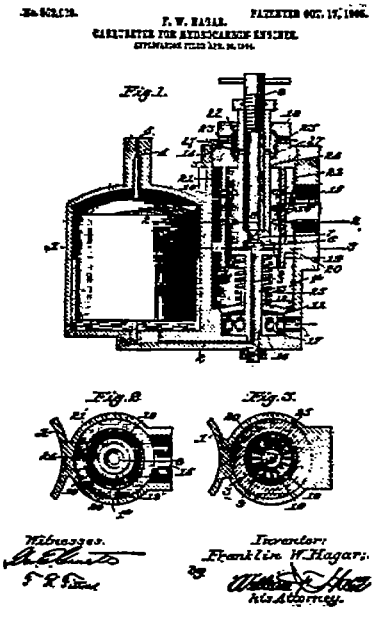
F. W. HAGAR.
CARBURETER FOR HYDROCARBON ENGINES.
Fig. 1.
Fig. 2.
Fig. 3.
Witnesses.
Inventor:
Franklin W. Hagar.
his Attorney.

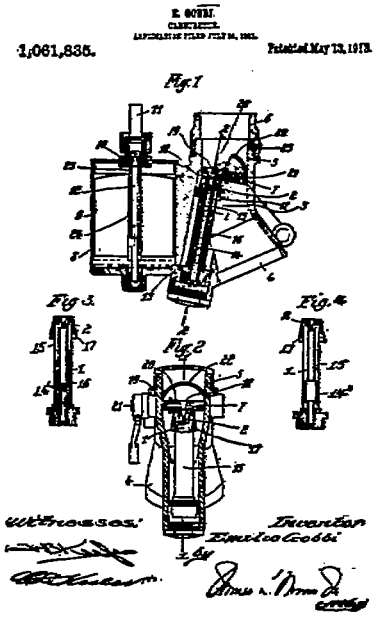
1,061,835.
Fig. 1
Fig. 2
Fig. 3.
Fig. 4.
Witnesses.
Inventor
Emilio Gobbi

Class 9—carburetors, proportioning flow, aspirating, multiple fixed fuel inlets, single air inlet with regulating valve.—As the proportionality between air and fuel for every fixed fuel inlet in a fixed air inlet is constant within some range of flow rates peculiar to the particular arrangement in question, one more or less obvious way of avoiding the necessity for compensation beyond this range is to limit the action to the range itself by providing a sufficient number of such operating units—in short the multiple carburetor. Such multiple carburetors have already been examined, but another sort or series of multiple carburetors can be based on variable air inlets as on fixed, and with some advantages. This class includes all those having a series of fixed fuel inlets with any number of air inlets provided with air area regulating valves. The common groups of arrangements constitute each a subclass, two of these being concerned with a single air valve, opening of which brings the fuel jets successively into action, the standpipe associated with an air inlet valve another, the two jet, high and low speed or idling, and main, used with air inlet valves, makes still another, and finally the tilting fuel chamber, a last group.

A single example will serve to illustrate the general class, not definitely belonging to the subclasses, that on page 329. (1,177,538, Mar. 28, 1916, Roberts.) Here a series of three fuel inlets is placed in a cylindrical passage with valved partitions each side of each jet, the valves being linked together, so the throttle for the first jet is the air inlet for the second. While each nozzle is located at the same height above its float chamber level, each successive one is acted on by a different vacuum.

Subclass 9.1—Fuel inlets act progressively with opening of automatic air inlet regulating valve.—From one point of view there would be no difference between this and the case of one variable fuel inlet or one multiported fixed fuel inlet associated with variable air inlet, but there is a real difference, because here there is no fuel-regulating valve, and the several fuel inlets are not equivalent to a multiported single inlet because all the orifices of the latter always work together, whereas in the present case there are times when all are working and other times when perhaps only one is in action.

Four fuel inlets are arranged on page 330 (1,006,130, Oct. 17, 1911, Riotte), to be just out of the path of a swing-gate automatic air valve across the air inlet, and are brought successively into action by the air-valve movements; those nozzles lying inside its edge discharge fuel, those outside do not. A series of 10 fuel inlets is provided on pages 330 and 331. (1,011,960, Dec. 19, 1911, Ionides.) These are arranged along the top edge of a longitudinal slot cut in a cylindrical casing, which is traversed by a vacuum-controlled piston valve. The length of slot exposed to air flow across it determines the number of fuel inlets acted on by the air velocity head vacuum inducing fuel flow. An almost identical plan with a variation of some structural details is shown on pages 331 and 332. (1,119,076, Dec. 1, 1914, Freyl.) A group of four nozzles arranged radially around the seat of an air valve at different heights is shown on page 332. (1,130,474, Mar. 2, 1915, Brush.)

Subclass 9.2—Fuel inlets act progressively with opening of throttle-controlled air inlet regulating valve.—This subclass is similar to the last except for the control of the air valve, which is here directly by

the throttle or is itself the throttle. As engines may operate at a considerable speed range for a given throttle position, so does the throttle seem to be an indirect means of total air and active fuel inlet control, by no means as primary a variable as the vacuum that itself is fixed by or fixes flow. It would seem, therefore, that this class contributes less to the solution of the problem of proportionate flow than the last, but as one is convertible into the other by well-known means the cases of the class are worth study with that fact in view.

One fairly early case, considering the youth of the whole art, is that on page 333 (858,437, July 2, 1907, Brooke), which illustrates a cylindrical valve acting at the same time as air inlet and throttle as it moves longitudinally and uncovers and exposes to the vacuum of air flow, three fuel inlets in succession. Seven fuel inlets are successively brought into action by the cylindrical slide, serving as both throttle and air valve in the arrangement on page 333. (881,279, Mar. 10, 1908, Allen.) Here the orifices are placed well in front of the slide and fuel flow is induced solely by air velocity head vacuum, so as the air flow does or does not sweep an orifice, that orifice discharges fuel or does not, and the amount of discharge of any one or all that are exposed varies with the velocity of air past it, but, of course, not necessarily in direct proportion. The iris form of air valve or throttle reappears once more on pages 333 and 334 (881,800, Mar. 10, 1908, Horstmann), this time the continually enlarging circle of air entrance exposes to the action of air velocity four fuel nozzles at different distances from the center. Each in turn, they discharge under the air velocity head vacuum influence, the direction of air flow being parallel to that of fuel flow instead of crosswise as in the last case.

Three fuel nozzles uncovered in succession by a cylindrical valve serving as throttle receive air partly from a fixed and partly from an automatic inlet, which thus impose a vacuum due to entrance resistance in addition to the velocity head vacuum, but the former must be kept low enough so that the nozzles screened by the valve do not discharge. This is illustrated on page 334. (1,073,179, Sept. 16, 1913, Sprung.) An interesting special form is shown on page 335 (1,089,524, Mar. 10, 1914, Barrett & Wilson), where a straight row of fuel inlets in a rectangular air passage is swept by a rotating throttle disk having a rectangular hole, the angle between the long axes of the two rectangles determines the area of air passage exposed and the length of the fuel nozzle line. A rotating barrel throttle with two slots, one, straight sided and parallel, acting as throttle and the other, inclined, acting to control the lengthened area of the air inlet and the number of fuel inlets exposed, is shown on page 335. (1,094,674, Apr. 28, 1914, Miller & Adamson.) A later form provided with a second air valve of the swing type, controlling the distribution of the air on the two sides of the line of fuel inlets, also operated with the throttle and arranged with two float chambers to use two fuels, the more volatile one acting only on the low-speed end of the nozzle row for starting and the less volatile feeding all the rest of the nozzles, is shown on pages 335 and 336. (1,183,221, May 16, 1916, Miller & Adamson.)

Subclass 9.3—Standpipe.—This subclass is similar to the standpipe subclass already reviewed, except that the latter received its air through fixed inlets, whereas in the present case the air enters through regulating air valves, which prevent the vacuum from in-

creasing so much with the air flow increase, and thus permitting of shorter standpipes. In the first case, on page 337 (1,130,700, Mar. 9, 1915, Bennett), air enters partly through a fixed and partly through an automatic valved inlet to a series of fuel outlets at different heights. Each of these is formed in a peculiar way, two thin metal sheets, sector shaped, fastened together on the radial but free on the circular edges, surround each fuel inlet, the circular edges pointing up at different heights. Air flow presses these together as it passes and the fuel discharges successively from the edges of the higher ones as flow increases, always into high velocity air. A curious form of this class is that on page 337 (1,147,337, July 20, 1915, Muir), provided with one nozzle fixed in position and several others at different levels in the body of an automatic air valve, gravity closed. As the air valve lifts a series of fuel nozzles are brought into action at different heights above the float level and in different vacuum positions; the fixed nozzle comes in only after the air valve has stopped rising and the vacuum still continues to increase; it therefore is a sort of high-speed supplementary jet.

Subclass 9.4—Two fuel inlets, one main and one idling.—Air enters through a special swing form of automatic valve, on page 338 (825,499, July 10, 1906, Sturtevant & Sturtevant), and fuel at the constantly narrowest part of the air inlet, so its flow is due to air velocity primarily. A separate fuel inlet is arranged in the throttle for idling. A single damper valve acting both as air valve and throttle is associated with two fuel inlets in front of it, on page 338 (1,016,108, Jan. 30, 1912, Steinbrenner), in such a way as to bring only one into action when the throttle is closed, while both act at more open positions if, of course, the velocity is high enough. A different and later disposition of two fuel inlets with respect to a damper valve, acting as throttle and air valve, whereby one only acts at idling and both for wider open throttle position is shown on page 338. (1,147,940, July 27, 1915, Griffin.)

Subclass 9.5—Tilting fuel chamber, radially disposed fuel inlets.—This is a sort of complement or inverse of the standpipe, where on increased air flow the resulting vacuum lifts the fuel to successively higher orifices, while here the nozzles are successively depressed in regions of the same or rising vacuum, but usually by the throttle or air valve.

A closed float chamber supported so as to rotate on two pins and lying wholly within the air passage is provided with a row of fuel orifices at different heights with reference to a lateral plane, so that they come successively within the sweeping action of the air current entering between the float chamber body acting as air valve and the casing, is the combination shown on page 339. (989,307, Apr. 11, 1911, Simmons.) Seven radial tubes at different angles on a constant level chamber formed in a valve spindle rotate with the latter and are brought into action by coming into the air stream successively as the valve opens. At the same time their flow varies, because of the changing liquid head, according to the arrangement on page 339. (1,073,577, Sept. 30, 1913, Smith.)

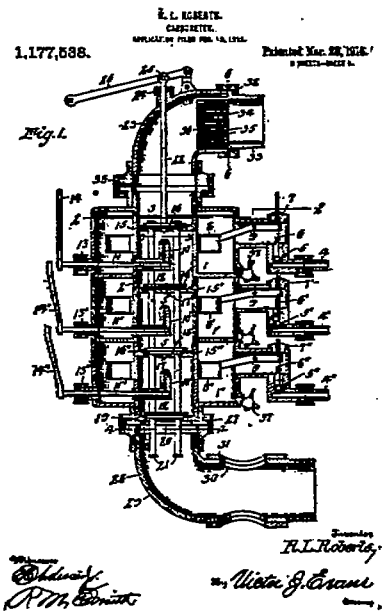
1,177,588.
Fig. 1.
R. L. Roberts,

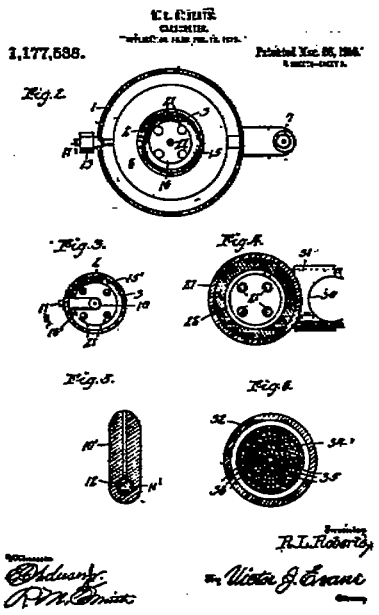
1,177,588.
Fig. 2.
Fig. 3.
Fig. 4.
Fig. 5.
Fig. 6.
R. L. Roberts,

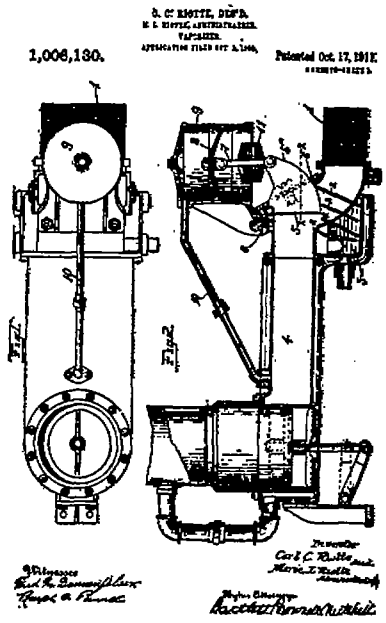
1,006,130.
Patented Oct. 17, 1911.
Fig. 1
Fig. 2

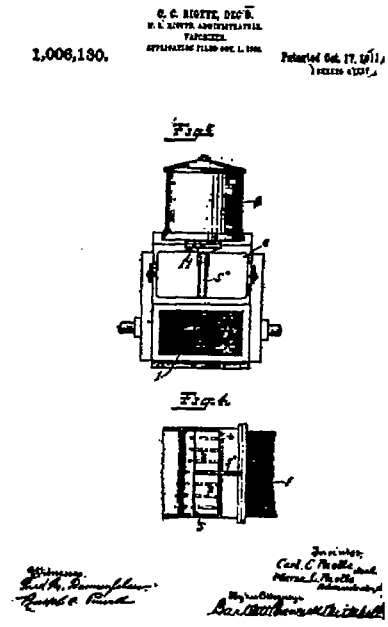
1,006,130.
Patented Oct. 17, 1911.
Fig. 5
Fig. 6

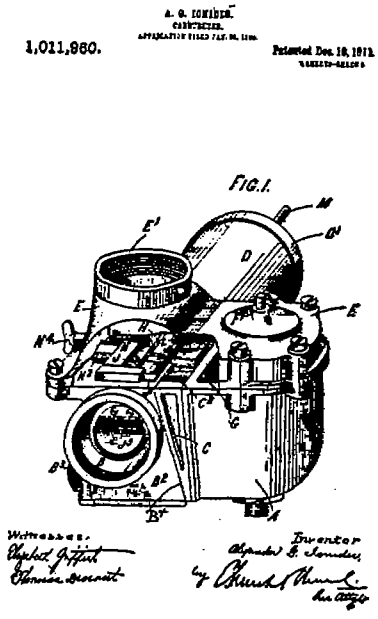
1,011,960.
Patented Dec. 19, 1911.
FIG. 1.

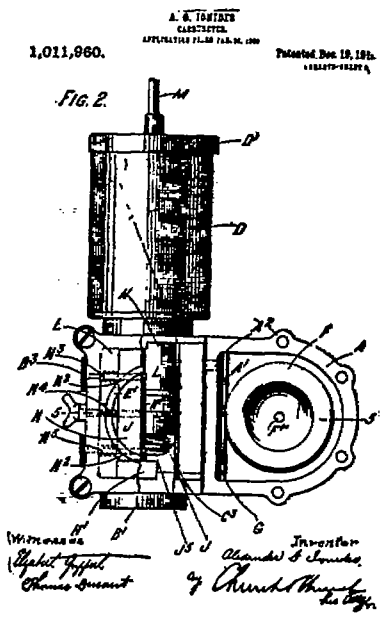
1,011,960.
Patented Dec. 19, 1911.
FIG. 2.

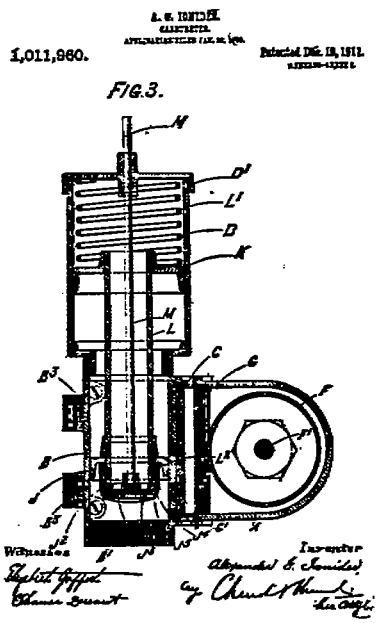
1,011,960.
FIG.3.

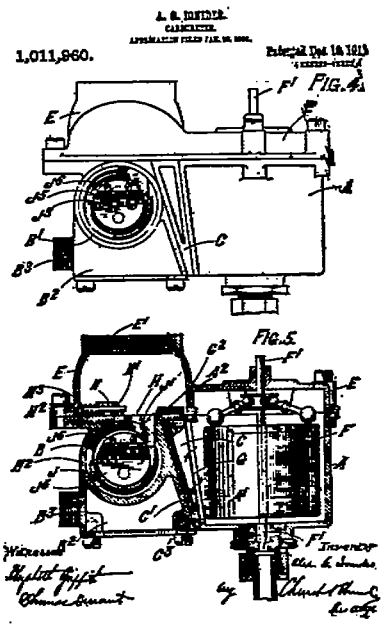
1,011,960.
FIG.4.
FIG.5.

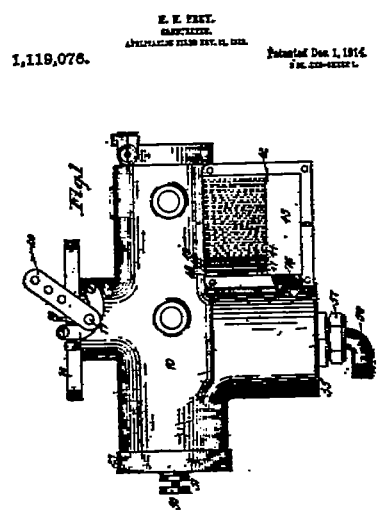
1,119,076.
Fig.1

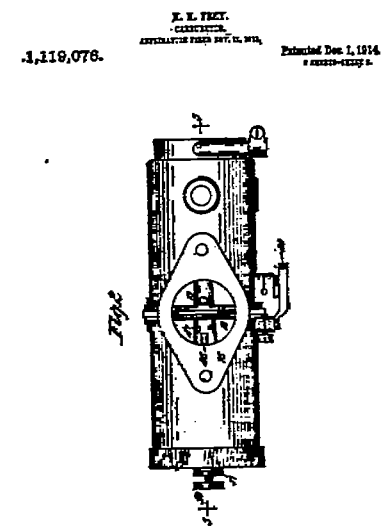
1,119,076.
Fig.2

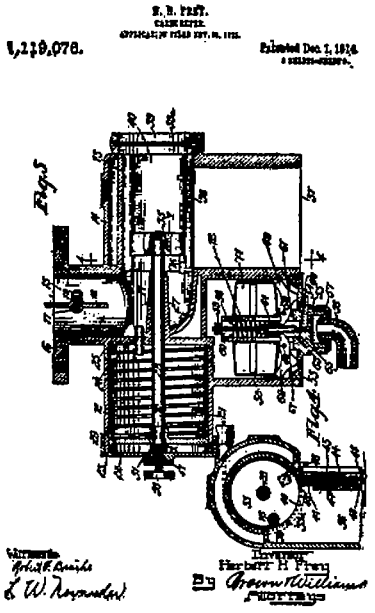
1,119,078.
Patented Dec. 1, 1914.
Fig. 5
Fig. 6
Inventor
Herbert H. Frey
By Brown Williams
Attorneys

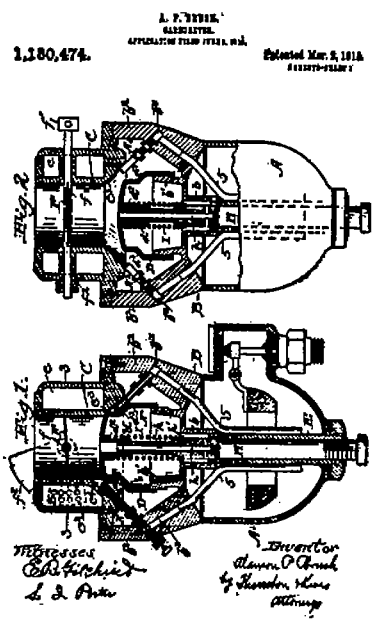
1,130,474.
Patented Mar. 2, 1915.
Fig. 2
Fig. 1
Witnesses
Inventor
Alonzo P. Crouch
by Thornton Hines
Attorney

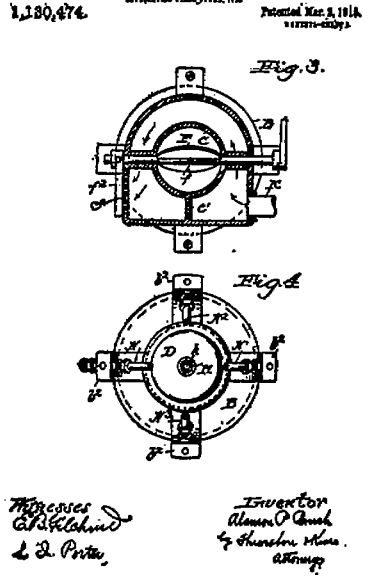
1,130,474.
Patented Mar. 2, 1915.
Fig. 3.
Fig. 4
Witnesses
Inventor
Alonzo P. Crouch
by Thornton Hines
Attorney

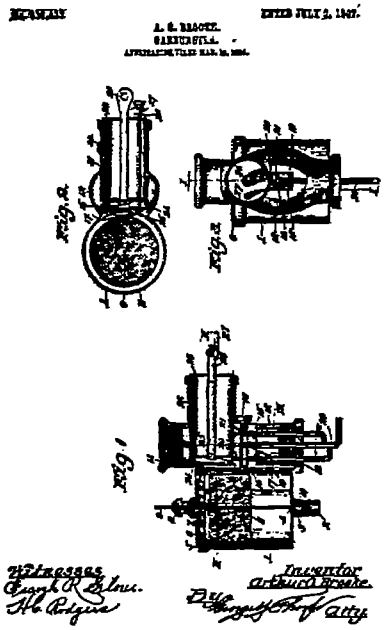
Fig. 1
Witnesses
Inventor
Arthur Brooke

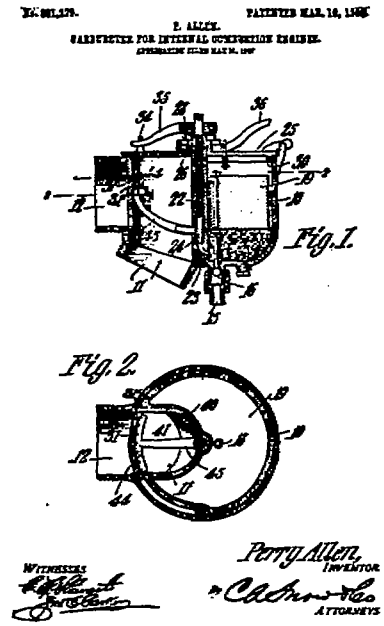
Fig. 1.
Fig. 2.
Perry Allen
INVENTOR
ATTORNEYS

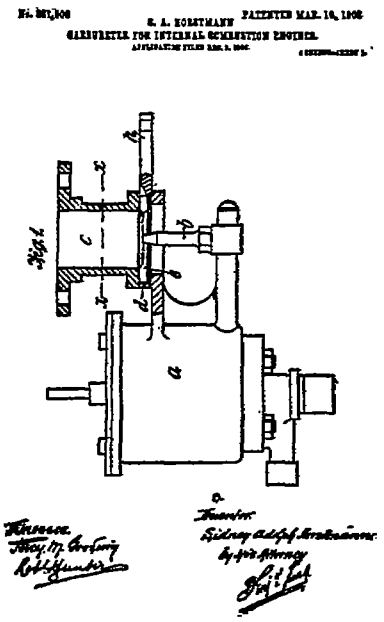
Fig. 1.
Witnesses
Inventor

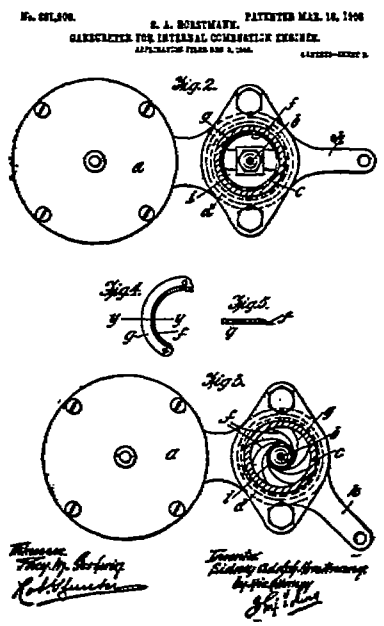
Fig. 2.
Fig. 4.
Fig. 5.
Fig. 3.
Witnesses
Inventor

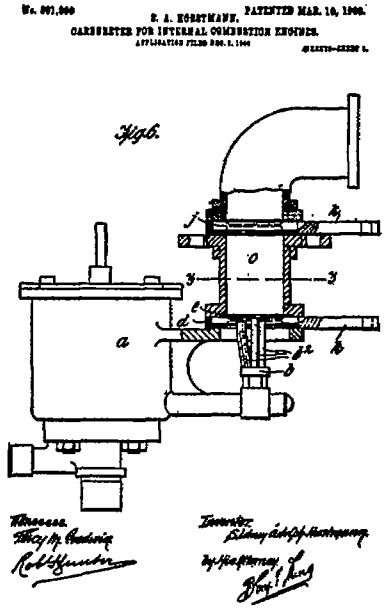
S. A. HORSTMANN.
CARBURETER FOR INTERNAL COMBUSTION ENGINES.
Fig. 6.

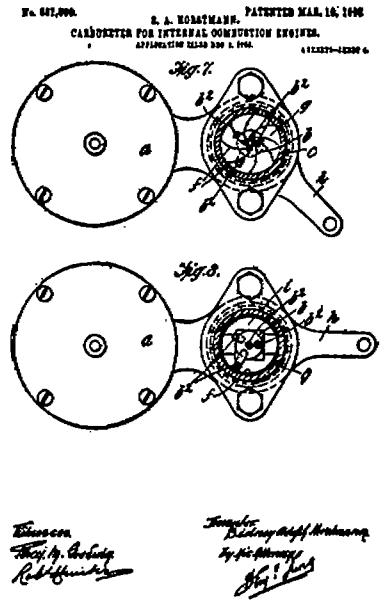
S. A. HORSTMANN.
CARBURETER FOR INTERNAL COMBUSTION ENGINES.
Fig. 7.
Fig. 8.

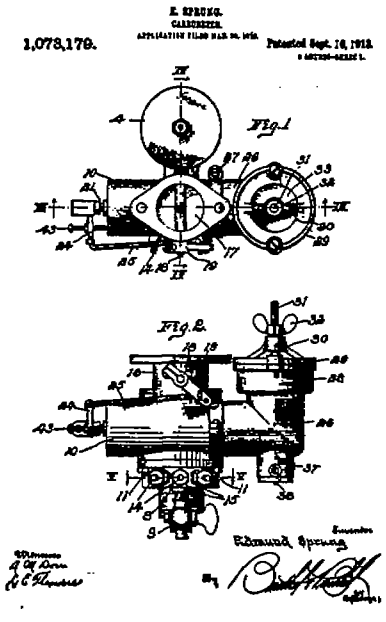
E. SPRING.
CARBURETER.
1,078,179.
Patented Sept. 16, 1913.
Fig. 1
Fig. 2.
Edmund Spring

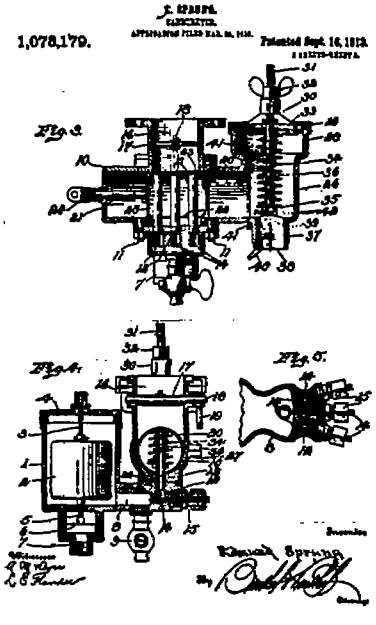
E. SPRING.
CARBURETER.
1,078,179.
Patented Sept. 16, 1913.
Fig. 3.
Fig. 4.
Fig. 5.
Edmund Spring

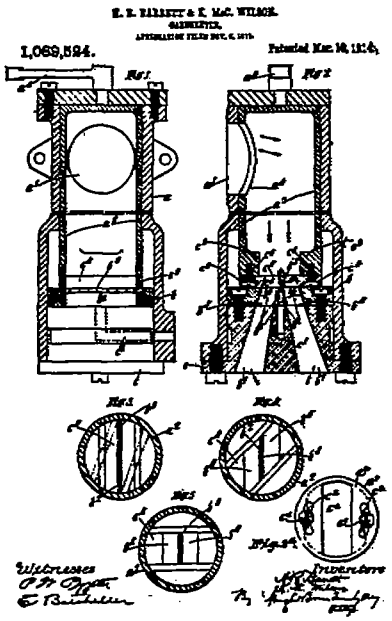
1,069,524.

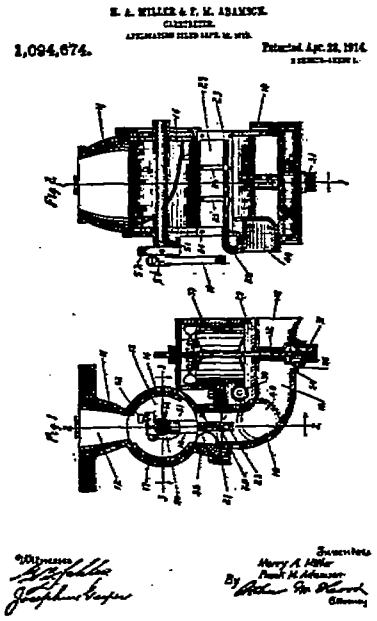
1,094,674.

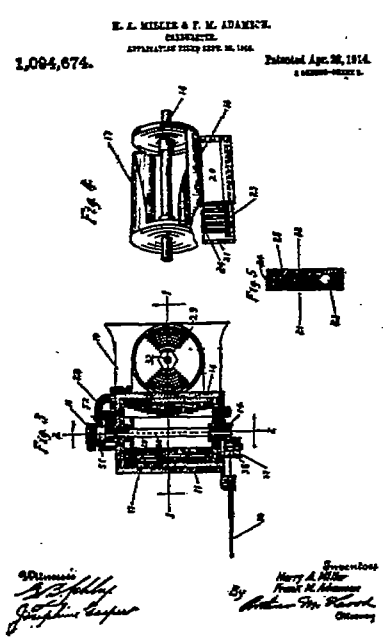
1,094,674.

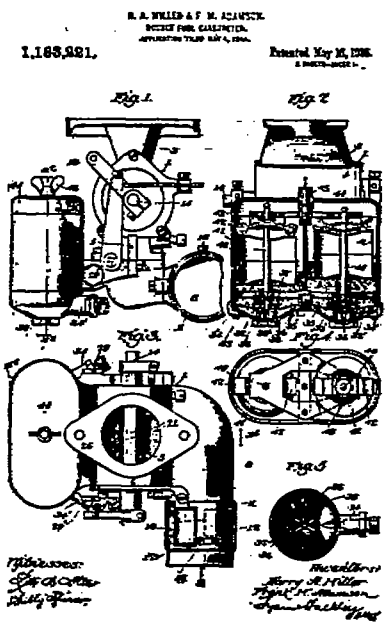
1,163,221.

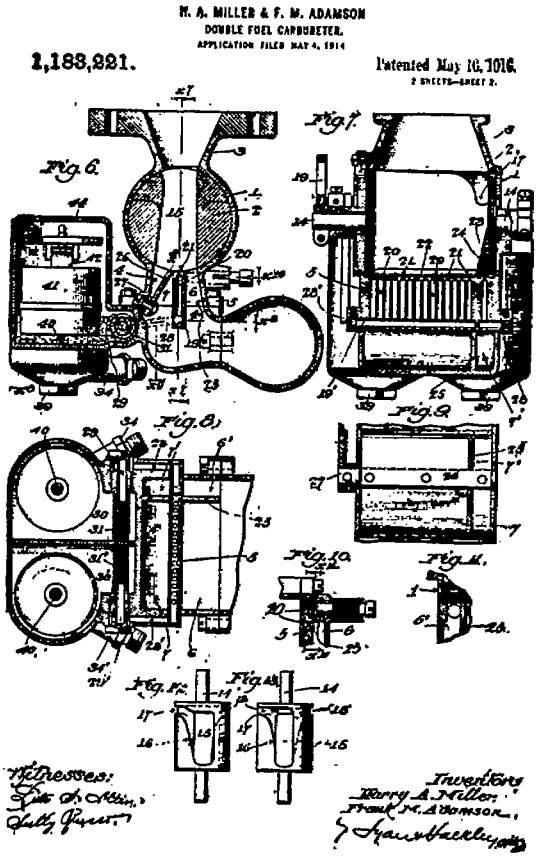
H. A. MILLER & F. M. ADAMSON
DOUBLE FUEL CARBURETER.
APPLICATION FILED MAY 4, 1914
1,183,221.
Patented May 16, 1916.
Fig. 6.
Fig. 7.
Fig. 8.
Fig. 9.
Fig. 10.
Fig. 11.
Fig. 12.
Fig. 13.
Witnesses:
Inventors
Harry A. Miller,
Frank M. Adamson,

1,130,700.

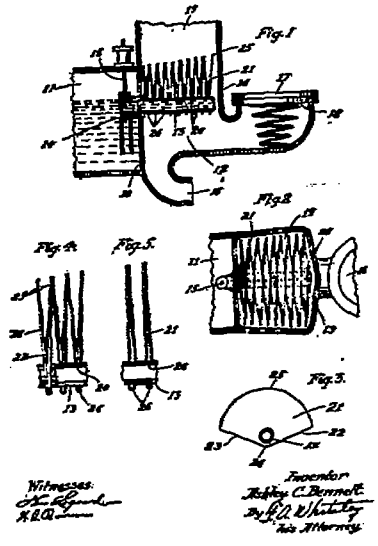

1,147,337.

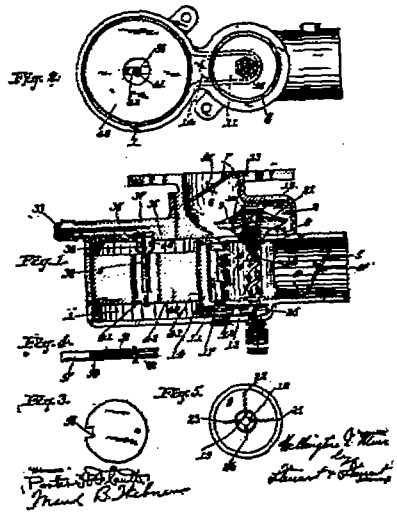

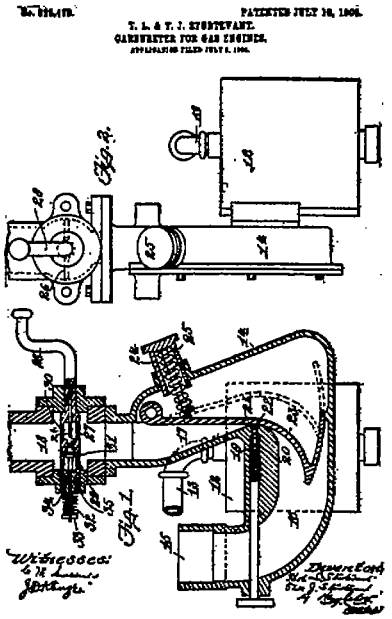
T. L. & T. J. STURTEVANT.
CARBURETER FOR GAS ENGINES.
Fig. 1.
Fig. 2.

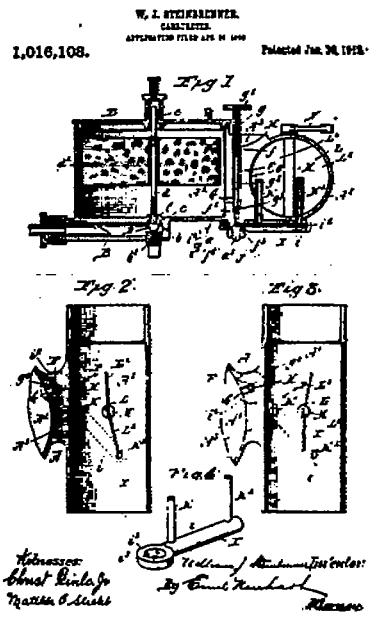
W. J. STEINBRENNER.
CARBURETER.
1,016,108.
Fig. 1
Fig. 2.
Fig. 3.
Fig. 4.

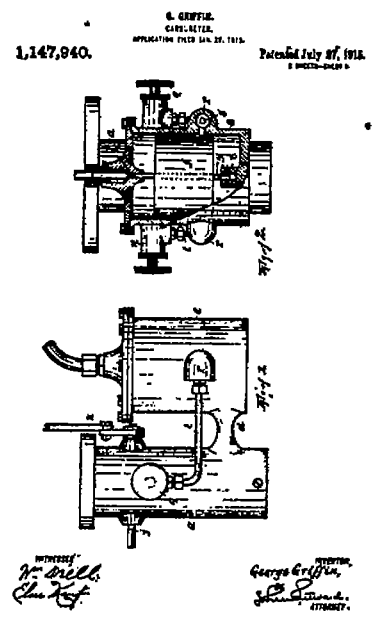
G. GRIFFIN.
CARBURETER.
1,147,940.
Patented July 27, 1915.
Fig. 2.
Fig. 1.
Witnesses:
Inventor,
Attorney.

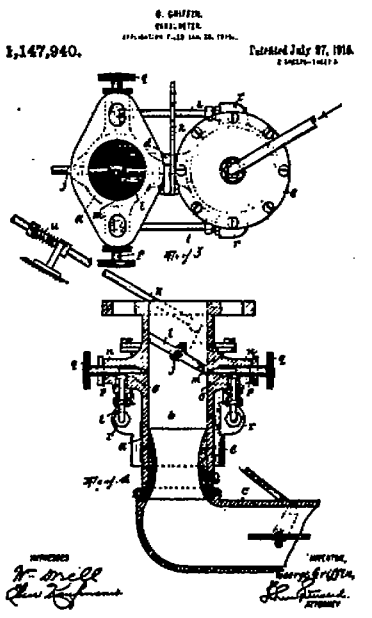
G. GRIFFIN.
CARBURETER.
1,147,940.
Patented July 27, 1915.
Fig. 3
Fig. 4
Witnesses
Inventor,
Attorney.

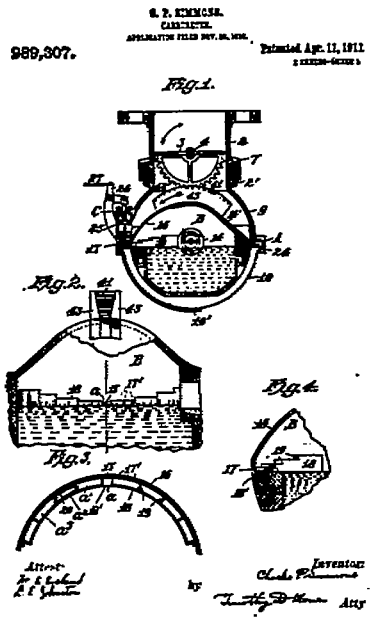
989,807.
Patented Apr. 11, 1911.
Fig. 1.
Fig. 2.
Fig. 3.
Fig. 4.
Inventor
Atty

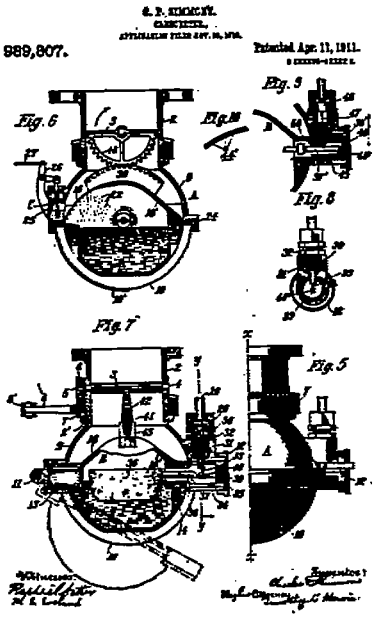
989,807.
Patented Apr. 11, 1911.
Fig. 6
Fig. 5
Fig. 8
Fig. 7
Fig. 5

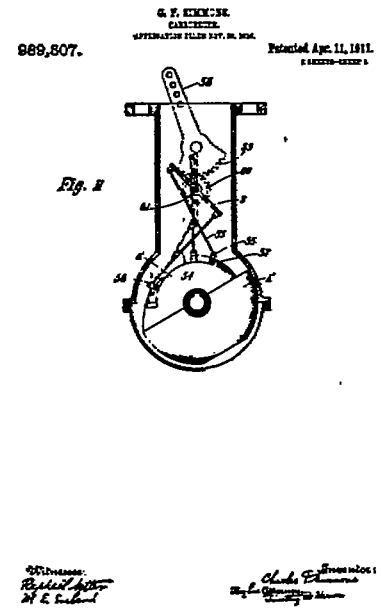
989,807.
Patented Apr. 11, 1911.
Fig. 11

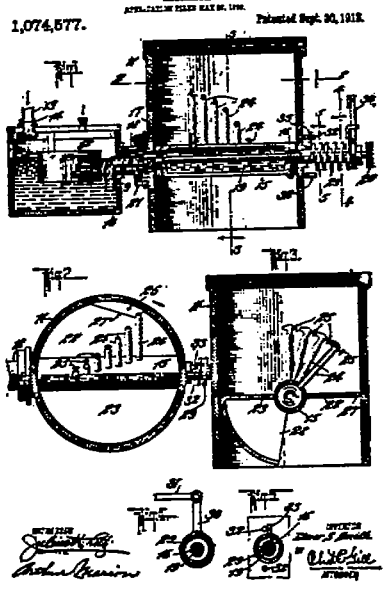
1,074,577.
Patented Sept. 30, 1913.
Fig. 1
Fig. 2
Fig. 3

Class 10—Carburetors, proportioning flow, aspirating, multiple fixed-fuel inlets and multiple variable-air inlets, valved for regulation.—The only difference between this and the other class of multiple fixed-fuel inlets with multiple variable-air inlets is the sort of air inlets, which in the former class were fixed, whereas in the present class they have at least one air-regulating valve. Besides those cases that clearly fall under one or more of the subclass definitions there are some that do not, and these are grouped under the general class.

In the first case, on page 343 (979,700, Dec. 27, 1910, Proehl), a semicircular ring of fuel inlets is arranged to be uncovered successively by a rotating cylindrical sleeve, and thus subjected to a flow-inducing vacuum of the air velocity, which is prevented from increasing as much as it otherwise would by a secondary automatic valve. Incidentally, a semicircular throttle moves with the sleeve. Quite a different arrangement is shown on page 343 (1,099,547, June 9, 1914, Gentle), which is practically a pair of carburetors in series. The first, for a volatile fuel, has a fixed air and fuel air inlet, and it discharges past a throttle to the second supplied with a less volatile fuel and provided with an automatic air valve, having the fuel inlet around its seat. When the engine becomes warm enough a thermostat closes the throttle of the first carburetor and at the same time opens a pure-air inlet to the second. Another case of double carburetor operating alternately instead of in series is that on page 344 (1,163,393, Dec. 7, 1915, Corbett). Here the main carburetor has a fixed primary and automatic secondary air inlet with single fixed fuel inlet, but there is another with automatic air inlet lifting a fuel valve in front of it somewhat similar to those of class 1. A cam permitting the opening of either the main automatic secondary or the supplementary automatic air and fuel valves is linked to a special throttle in the main primary air, so it is closed at the same time its secondary air is. This is a sort of high and low speed double-carburetor arrangement, controlled by a separate hand-operated linkage, independent of either the vacuum or the main throttle.

Subclass 10.1—Main fuel inlet with supplementary high-speed jet.—A fixed primary air inlet of tapered form is fitted with a fuel nozzle having two orifices at different levels and a side entrance automatic secondary air valve is provided for each in the form shown on page 345. (928,121, July 13, 1909, Goldberg.) At low-flow rates only the lower fuel orifice is in action, by reason of the low vacuum, and all the air enters by the fixed inlet. Increased flow and vacuum cause successively the opening of the lower secondary air, fuel discharge from the upper fuel orifice, and then the opening of the upper secondary air valve. Two fixed jets arranged on opposite sides of a throttle which controls both the relative and the absolute flow through the two chambers is illustrated on pages 345 and 346. (958,476, May 17, 1910, Cook.) The low-speed jet, so called because it is in action when the other is not on a nearly closed throttle, has an automatic air-inlet valve, while the high-speed jet is arranged in a fixed primary air passage with an automatic secondary air inlet. At all throttle positions except the nearly closed one both jets are in action. A combination, in which the high-speed jet is brought into action by the vacuum lift on the automatic secondary air valve of the low-speed jet, is shown on page 346. (993,770, May 30, 1911, Fritz.)

Another case of bringing in the high-speed jet by the throttle is shown on page 346. (1,046,434, Dec. 10, 1912, Bollee.) Here an accelerating cup is added to the low-speed jet, which is fixed in a fixed-air inlet, the cup emptying as the throttle is opened and before the high-speed jet comes in. The high-speed jet has its own separate tube with fixed primary and ball type of automatic secondary air valve. An unusual form of throttle controlling the action of the high-speed jet is shown on pages 346 and 347. (1,078,349, Nov. 11, 1913, Hawxhurst & Nicolai.) This throttle stem carries first a small poppet valve which opens wide the outlet from the low-speed jet in its fixed air passage, then in succession a series of three concentric poppets are opened in succession, admitting to the main mixing chamber the delivery from the high-speed jet gradually, and at the same time increasing the spring tension of the automatic secondary air valve of the high-speed chamber.

Another case of two jets at different levels in one chamber is shown on page 347 (1,099,293, June 9, 1914, Goldberg and Tillotson), the high-level high-speed jet being brought into action by the opening of the secondary automatic air valve indirectly as it closes an air hole from the atmosphere to the high-speed jet passage which permits the vacuum to build up and the jet to work, as it could not so long as this air hole was open. The same result could, of course, be accomplished by a direct mechanical connection from the secondary air valve to a fuel valve at the high-speed jet or by the vacuum alone. Succession by the velocity of the secondary air alone is shown on page 347. (1,120,763, Dec. 15, 1914, Thomas.) The high-speed jet is here located in the air throat in front of the automatic secondary air valve.

Subclass 10.2—Main fuel inlet with supplementary idling jet.—The principal difference between this and the previous subclass is one of succession versus alternation. In the previous case the low-speed jet continued to work after the high-speed jet came into action, here a low-speed or idling jet gives way to, or is replaced by the high-speed jet, no matter what the mechanism of alternation may be. In the case on page 348 (1,055,352, Mar. 11, 1913, Pembroke), a small fuel tube is carried from the float chamber to a point above the throttle and is in action only when the vacuum there is great enough to lift the fuel, which it can not do at open throttle, because the main carburetor proper is of the automatic air-valve class. The same result is attained on page 348 (1,104,560, July 21, 1914, Shoobridge & Gunstone), by drilling the walls and leading through these holes both fuel air to the stem of the throttle, rotation of the stem acting as a valve with reference to the holes in it and the wall. A different construction again is shown on pages 348 and 349. (1,166,308, Dec. 28, 1915, Arquembourg.)

Subclass 10.3—Multiple carburetor, progressive, by throttle, with individual automatic air inlet regulating valves.—This is the subclass of multicarburetors with automatic air valves with throttle control of succession, and as arranged on page 350 (871,741, Nov. 19, 1907, Sturtevant & Sturtevant), there are two units connected to a three-ported throttle by means of which either the large or the small one, or both, may be brought into action. Five carburetors, each with fixed fuel inlet and swing type automatic air inlets, are brought in successively by the rotation of a cylindrical sleeve throttle

on pages 350 and 351. (881,516, Mar. 10, 1908, Krebs.) Rotation of a large barrel throttle brings in four units on pages 351 and 352 (891,219, June 16, 1908, Menns), but here there is added at the end of the throttle a common automatic secondary air valve. Three units arranged radially in a taper air passage with three radial partitions are controlled by a rotating throttle disk; each one is supplied with primary and secondary air, both vacuum controlled in the form, page 352. (1,001,950, Aug. 29, 1911, Hart.) A pair of plain secondary air-valve carburetors are arranged side by side, using one float chamber and each with its own throttle, on page 353 (1,152,031, Aug. 31, 1915, Lobdell), but the throttles are so linked together as to bring about the action of each in succession.

Subclass 10.4—Multiple carburetor, progressive by vacuum, with individual automatic air inlet regulating valves.—Just as with single carburetors vacuum control of any regulating valve in a carburetor intended for general service, including variable speed engines, is more logical than throttle control, so here in the control of succession of multiple carburetors the same should be true. This being the case, the present subclass is of greater interest than the preceding one though any good features of one could be worked into the other by a designer. If an automatic air-valve carburetor worked as a self-compensating device then there would seem to be no need for multiple carburetors of this class and there are not many. One of these is shown on page 354 (1,040,414, Oct. 8, 1912, Rettig), where three automatic air-valve carburetors are arranged around one float chamber, each air valve not only regulating the fuel flow vacuum of its own chamber but also opening the discharge from it. The vacuum at the outlet thus becomes the main lifting factor in the air-valve movement instead of the air flow between it and the fuel nozzle. Another of this class is shown on page 354 (1,108,245, Aug. 25, 1914, Schebler) with one main fuel jet in a fixed air passage and automatic secondary air, but having in addition five high level high-speed jets brought in when the vacuum lifts the several corresponding air valves.

Subclass 10.5—Standpipes.—On page 355 (961,481, June 14, 1910, Carter) is shown a fuel standpipe in a fixed primary air inlet to which is also attached a secondary air valve, thus providing a double compensation. An increase in the size of the primary air inlet and a tapered form for it surrounding the standpipe is shown on page 355 (1,010,116, Nov. 28, 1911, Carter), to which is also added a low speed or idling lifting tube and a lowest level separate jet in action all the time. The secondary automatic swing-type air valve is retained. Another form of standpipe with one fixed and one automatic air inlet is shown on page 356 (1,133,527, Mar. 30, 1915, Bennett), which has some other interesting features to adapt it to heavy fuels. One is a water inlet beyond the fuel, and the other is an exhaust-heated jacket for the float-chamber bowl and the interior of the liquid standpipe.

Subclass 10.16—Mixed flow.—Two fuel inlets arranged on opposite sides of a cylindrical air passage fitted with a single air valve are provided with mixed flow compensation on page 357. (1,168,513, Jan. 18, 1916, Kingston.) Each fuel inlet has the accelerating cup enlargement of its mixed flow air passage, previously noted in several other cases. The air or throttle valve is thick and more or less

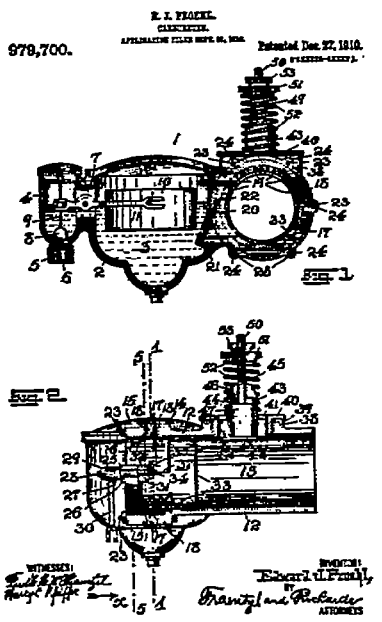
979,700.
Patented Dec. 27, 1910.
Fig. 1
Fig. 2
Inventor:
Witnesses:
Attorneys

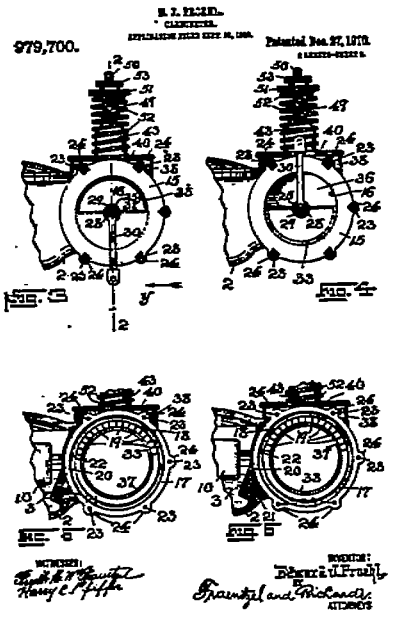
979,700.
Patented Dec. 27, 1910.
Fig. 3
Fig. 4
Fig. 5
Fig. 6
Inventor:
Witnesses:
Attorneys

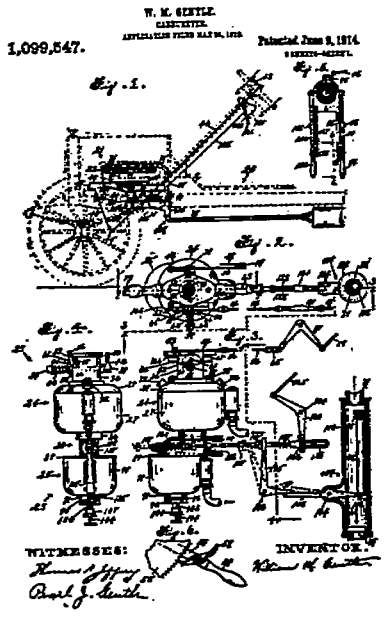
W. M. SIETLE.
1,099,547.
Patented June 9, 1914.
Fig. 1.
Fig. 2.
Fig. 3.
Fig. 4.
Fig. 5.
Witnesses:
Inventor.

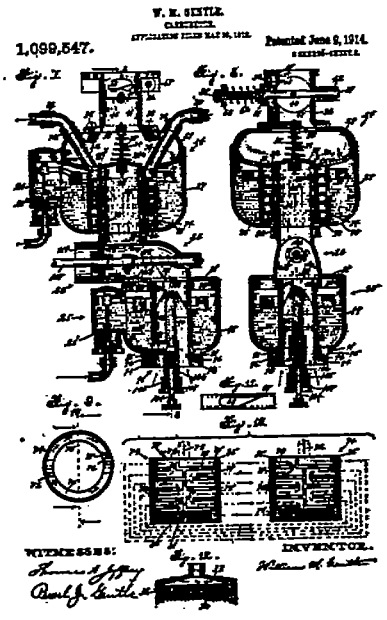
W. M. SIETLE.
1,099,547.
Patented June 9, 1914.
Fig. 7
Fig. 8
Fig. 9
Fig. 10
Fig. 11
Fig. 12
Witnesses:
Inventor.

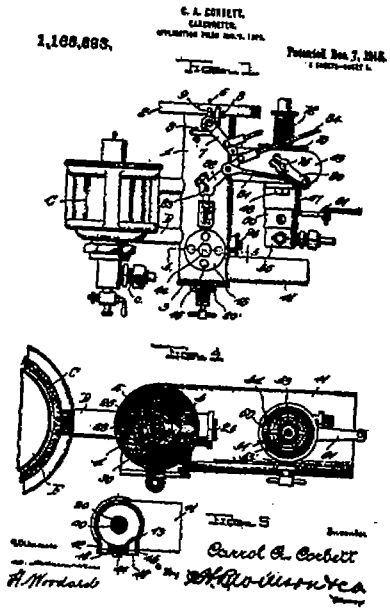
1,163,893.
Carrol A. Corbett

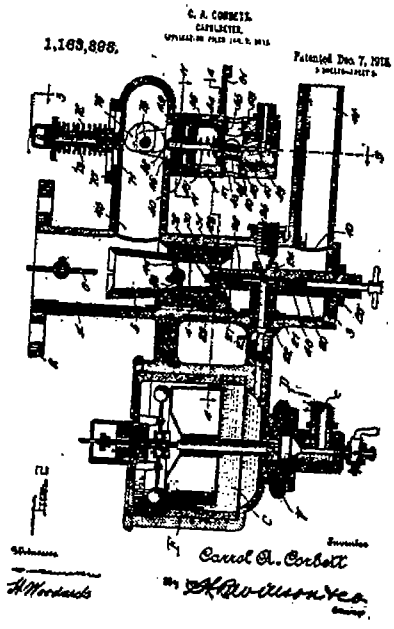
1,163,893.
Carrol A. Corbett

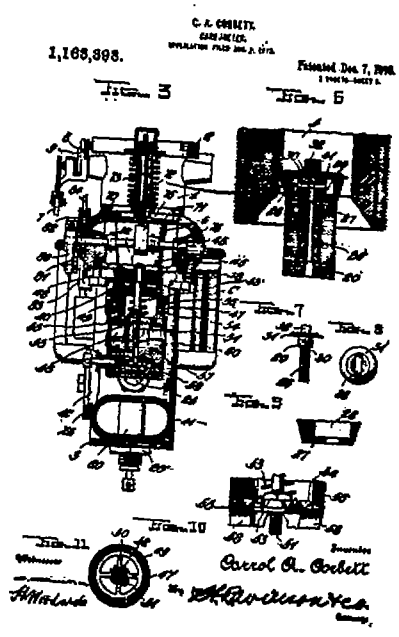
1,163,893.
Carrol A. Corbett

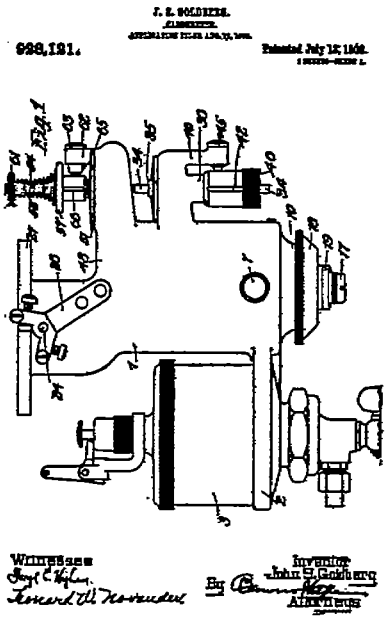
J. S. GOLDBERG.
CARBURETOR.
APPLICATION FILED APR. 22, 1908.
Patented July 13, 1909.
928,121.
Fig. 1
Witnesses
Inventor
John S. Goldberg
By
Attorneys

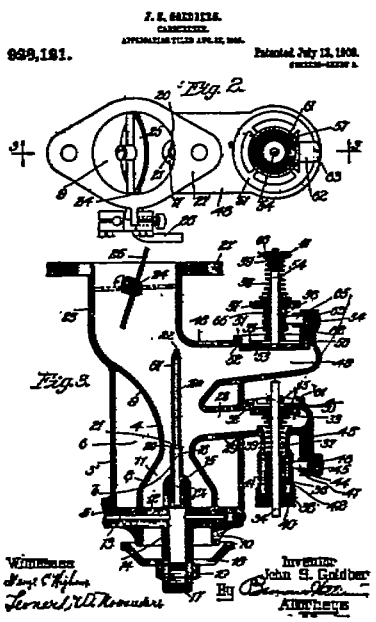
J. S. GOLDBERG.
CARBURETOR.
APPLICATION FILED APR. 22, 1908.
Patented July 13, 1909.
928,121.
Fig. 2
Fig. 3
Witnesses
Inventor
John S. Goldberg
By
Attorneys

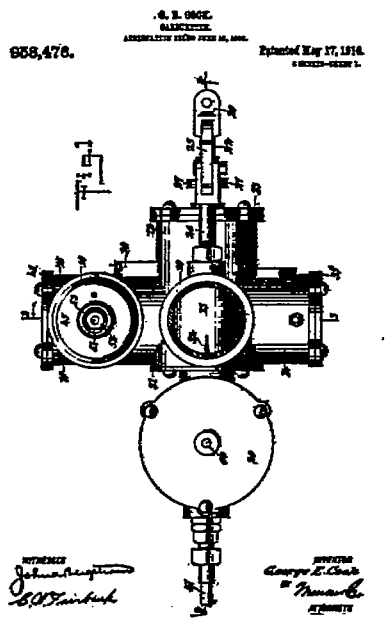
G. E. COOK.
CARBURETOR.
APPLICATION FILED JUNE 16, 1906.
Patented May 17, 1910.
958,476.
Fig. 1
Witnesses
Inventor
George E. Cook
By
Attorneys

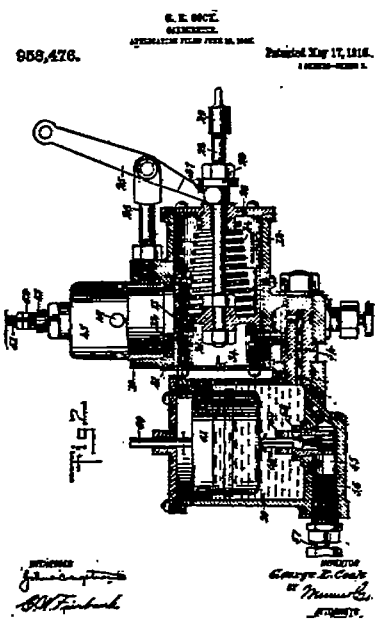
G. E. COOK.
CARBURETOR.
APPLICATION FILED JUNE 16, 1906.
Patented May 17, 1910.
958,476.
Fig. 2
Witnesses
Inventor
George E. Cook
By
Attorneys

G. E. COOK.
CARBURETOR.
APPLICATION FILED JUNE 16, 1909.

958,476. Patented May 17, 1910.

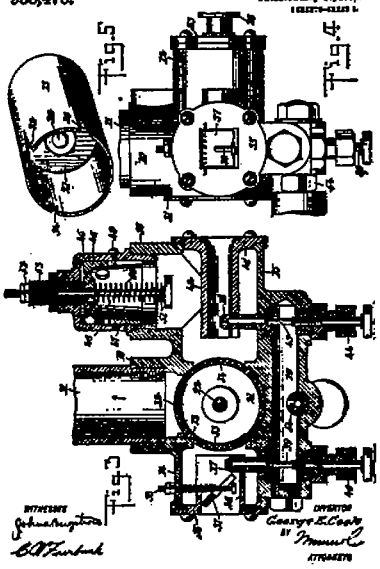

J. L. FRITZ.
BALANCER.
APPLICATION FILED FEB. 11, 1911.

998,770. Patented July 18, 1911.

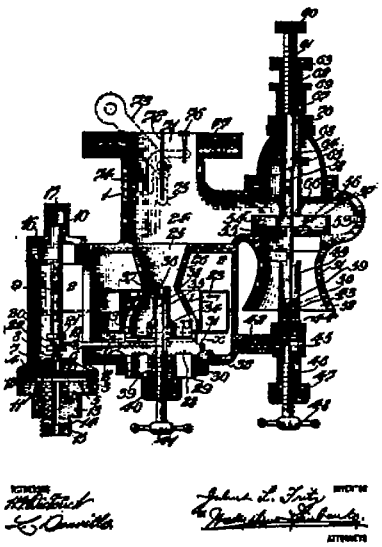

L. BOLLÉE.
CARBURETER.
APPLICATION FILED APR. 7, 1909.

1,046,434. Patented Dec. 10, 1912.

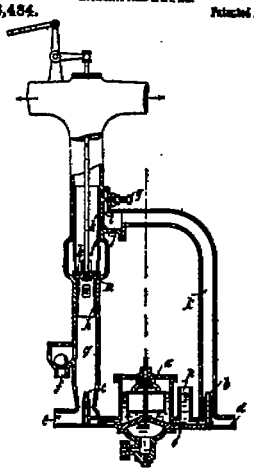

J. J. HAWKSFIRT & E. P. HIDOCAI
CARBURETING DEVICE.
APPLICATION FILED SEPT. 10, 1912.

1,078,849. Patented Nov. 11, 1913.

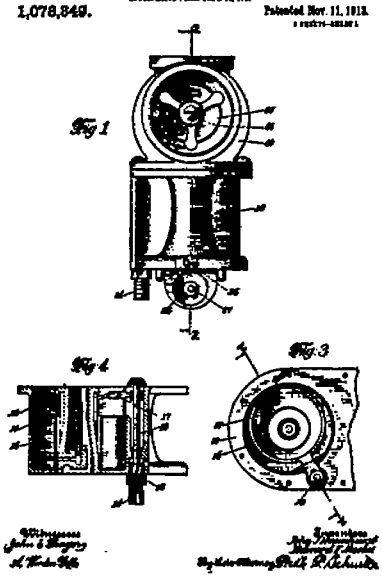

J. F. HAWKHURST & E. F. NICOLAS
CARBURETING DEVICE.
APPLICATION FILED SEPT. 28, 1912.

1,078,349. Patented Nov. 11, 1913.

Fig. 2

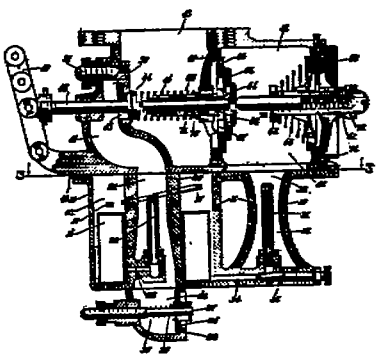

Witnesses: John E. Hagerty, of Washington; Geo. A. Phelps, Washington, D. C.

Inventors: John F. Hawkhurst, Edward F. Nicolas, By their Attorney, Geo. P. Schaefer.

J. E. GOLDBERG & H. C. TILLOTSON.
CARBURETOR.
APPLICATION FILED JULY 30, 1906. RENEWED APR. 30, 1914.

1,099,998. Patented June 2, 1914.

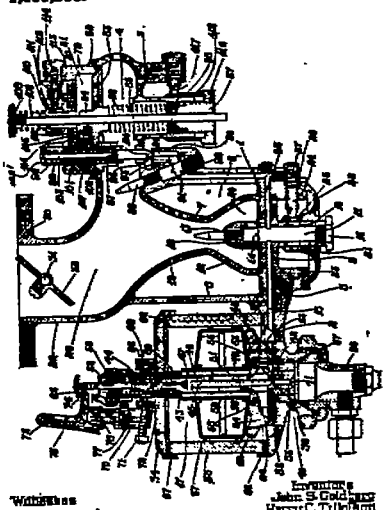

Witnesses: Geo. E. Stephens, Ernest Gaddis

Inventors: John S. Goldberg, Harry C. Tillotson, By Thomas G. Williams, Attorney.

E. T. TRUMAN.
CARBURETOR.
APPLICATION FILED SEPT. 28, 1908.

1,190,763. Patented Dec. 12, 1916.

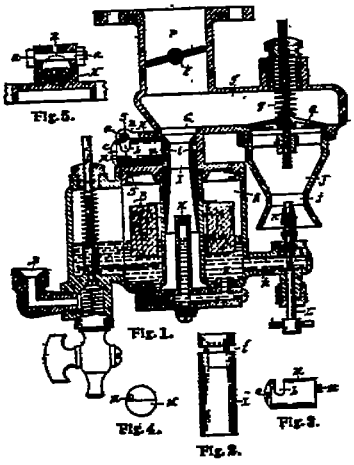

R. B. Benziger, E. F. Jennings

Horace T. Thomas, Parker & Butler

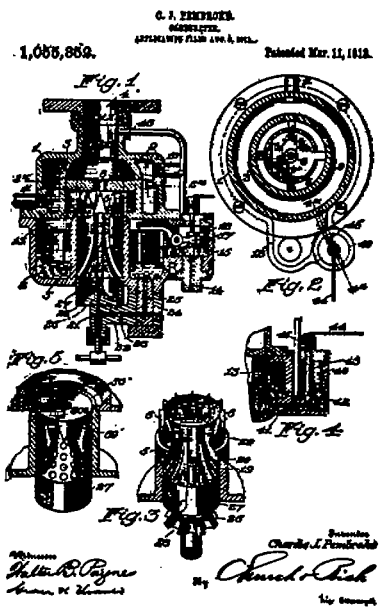
1,055,852.
Fig. 1.
Fig. 2
Fig. 5.
Fig. 4.
Fig. 3

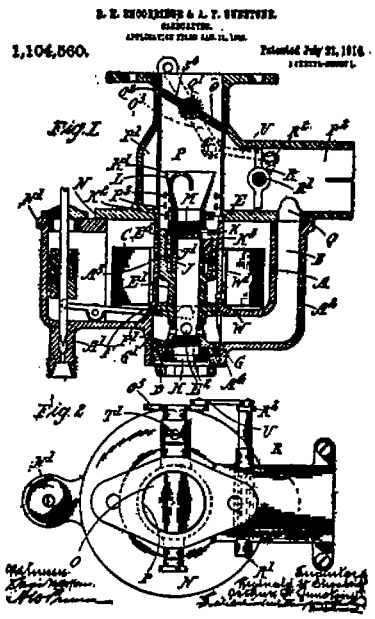
1,104,560.
Fig. 1.
Fig. 2

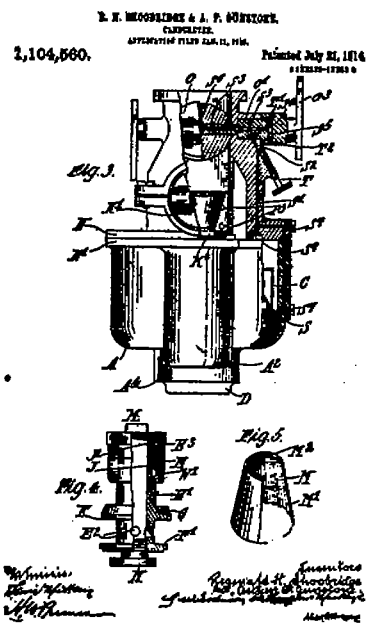
1,104,560.
Fig. 3.
Fig. 4.
Fig. 5.

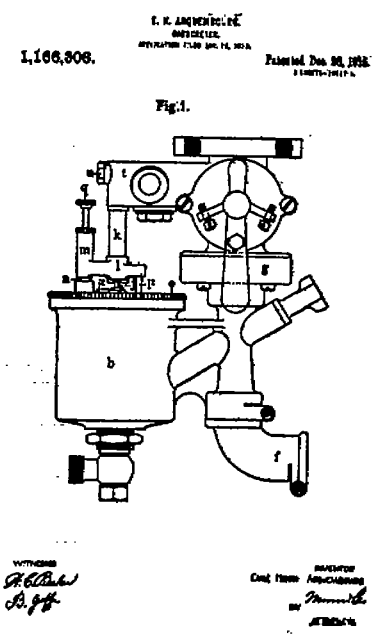
1,166,306.
Fig. 1.

1,166,308.

Patented Dec. 28, 1915.

Fig. 2.

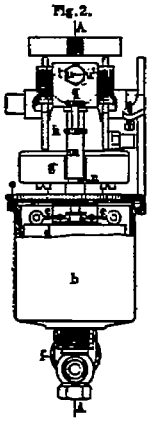

1,166,306.

Fig. 3.

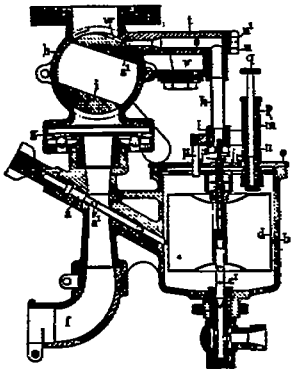

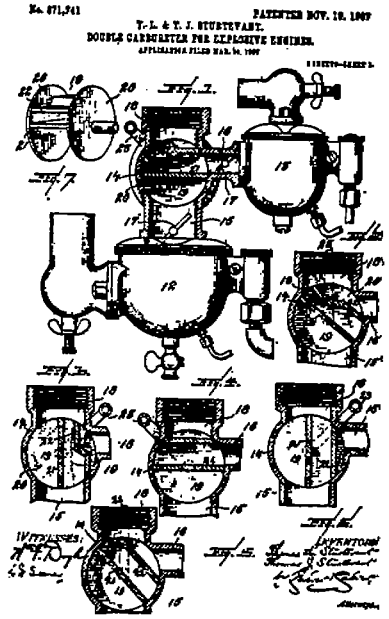
No. 871,941
PATENTED NOV. 19, 1907
T. L. & T. J. STURTEVANT.
DOUBLE CARBURETER FOR EXPLOSIVE ENGINES.
WITNESSES:
INVENTORS

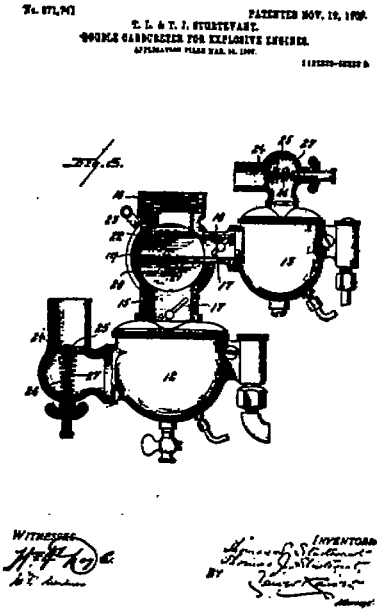
No. 871,941
PATENTED NOV. 19, 1907.
T. L. & T. J. STURTEVANT.
DOUBLE CARBURETER FOR EXPLOSIVE ENGINES.
WITNESSES:
INVENTORS

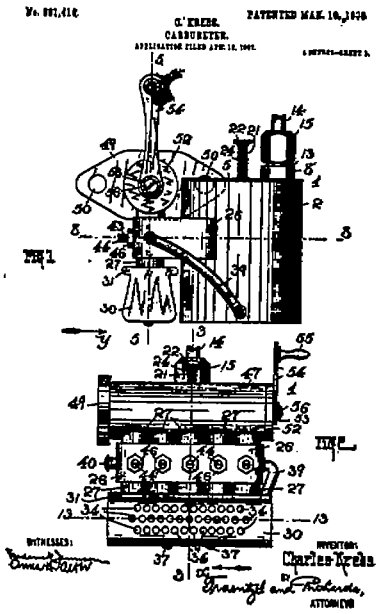
No. 897,416.
PATENTED MAR. 10, 1908.
C. KREBS.
CARBURETER.
Fig. 1
Fig. 2
WITNESSES:
INVENTOR:
Charles Krebs
Fraser and Richards,
ATTORNEYS

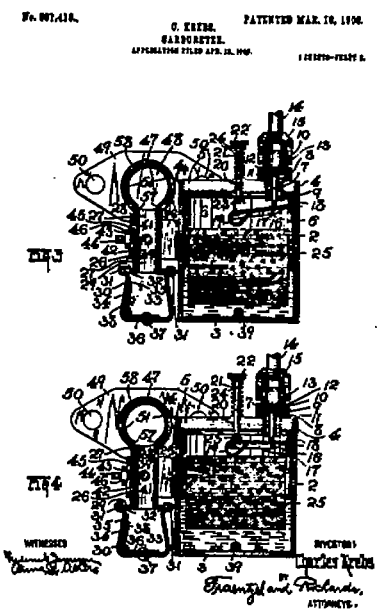
No. 897,416.
PATENTED MAR. 10, 1908.
C. KREBS.
CARBURETER.
Fig. 3
Fig. 4
WITNESSES:
INVENTOR:
Charles Krebs
Fraser and Richards,
ATTORNEYS.

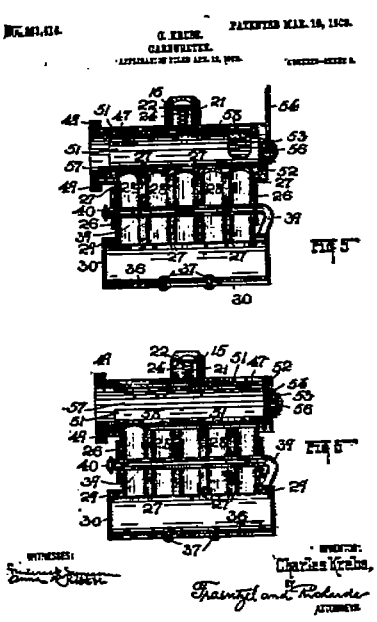
G. KREBS.
CARBURETER.
PATENTED MAR. 18, 1913.
Fig. 5
Fig. 6
Charles Krebs,
Fraenzel and Richards
ATTORNEYS

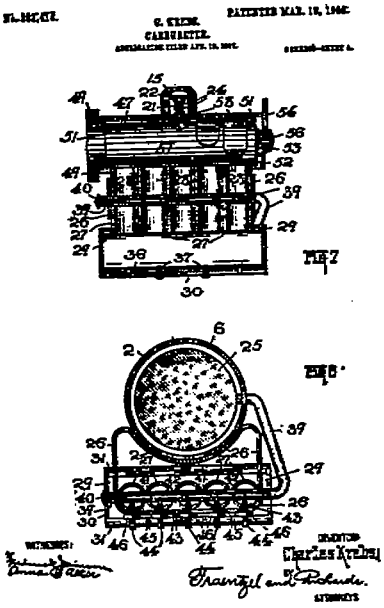
G. KREBS.
CARBURETER.
PATENTED MAR. 18, 1913.
Fig. 7
Fig. 8
Charles Krebs,
Fraenzel and Richards.
ATTORNEYS

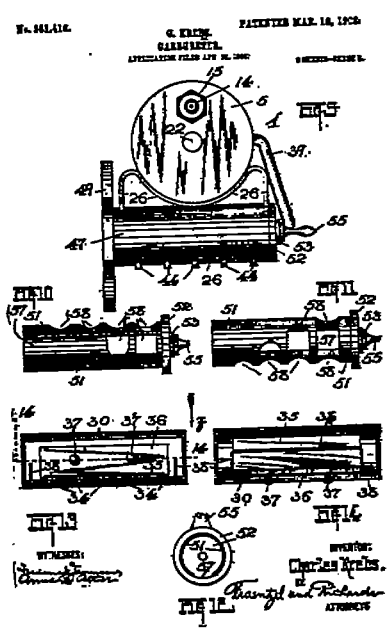
G. KREBS.
CARBURETER.
PATENTED MAR. 18, 1913.
Fig. 9
Fig. 10
Fig. 11
Fig. 12
Fig. 13
Fig. 14
Fig. 15
Charles Krebs.
Fraenzel and Richards
ATTORNEYS

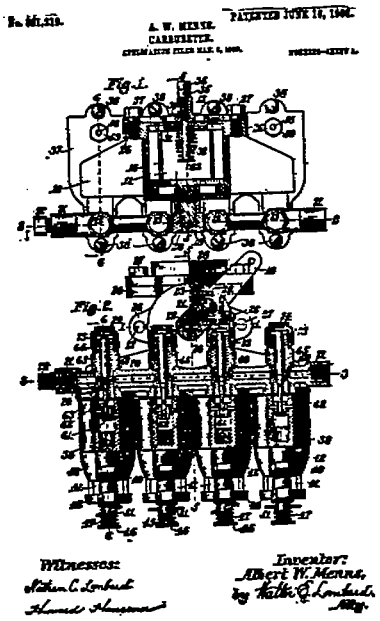
A. W. MENNS.
CARBURETER.
PATENTED JUNE 10, 1913.
Fig. 1.
Fig. 2.
Witnesses:
Nathan C. Lombard
Inventor:
Albert W. Menns,
by Walter E. Lombard,
Atty.

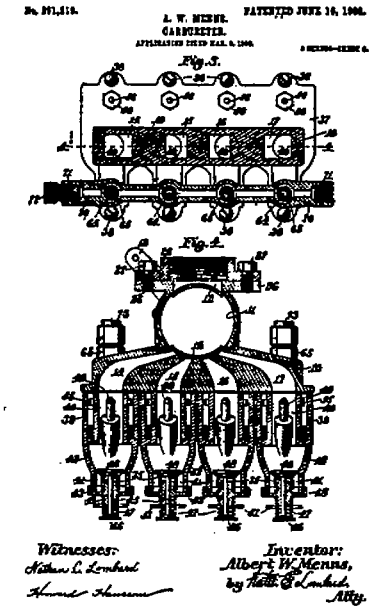
A. W. MENNS.
CARBURETER.
Fig. 3.
Fig. 4.
Witnesses:
Inventor:
Albert W. Menns,
Atty.

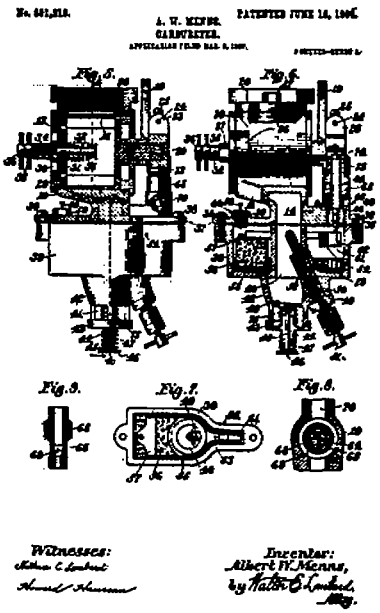
A. W. MENNS.
CARBURETER.
Fig. 5.
Fig. 6.
Fig. 9.
Fig. 7.
Fig. 8.
Witnesses:
Inventor:
Albert W. Menns,

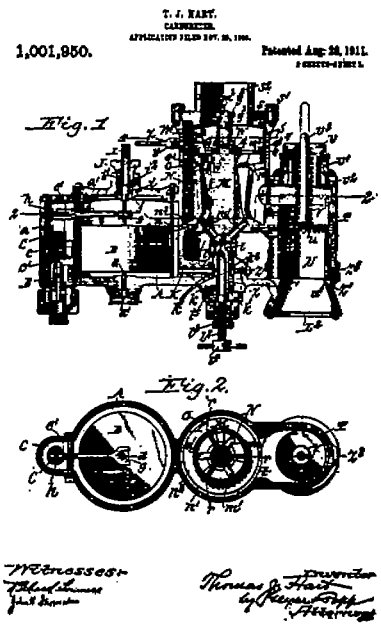
T. J. HART.
CARBURETER.
1,001,950.
Fig. 1
Fig. 2.
Witnesses:
Inventor
Thomas J. Hart

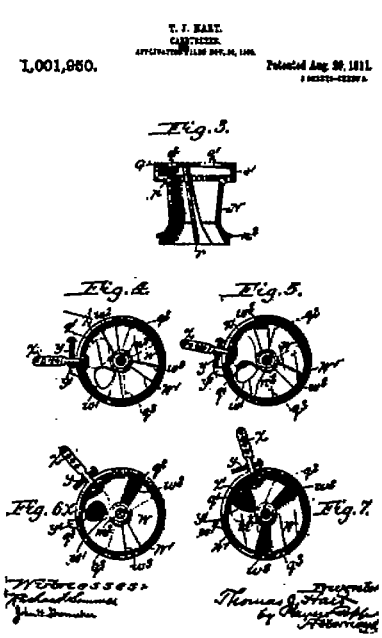
T. J. HART.
CARBURETER.
1,001,950.
Fig. 3.
Fig. 4.
Fig. 5.
Fig. 6.
Fig. 7.
Witnesses:
Inventor
Thomas J. Hart

F. S. LOBDELL.
CARBURETER.
APPLICATION FILED MAR. 6, 1915.

1,152,031. Patented Aug. 31, 1915.

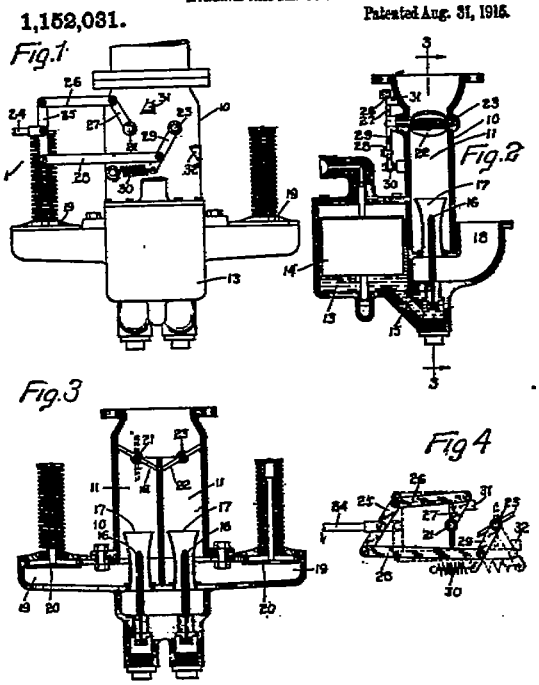

WITNESSES:
H. W. Meade
E. M. Culver

INVENTOR
Frank S. Lobdell
BY
A. M. Wooster
ATTORNEY

G. M. SCHEBLER.
CARBURETER.
APPLICATION FILED [illegible]

1,108,245. Patented Aug. 25, 1914.

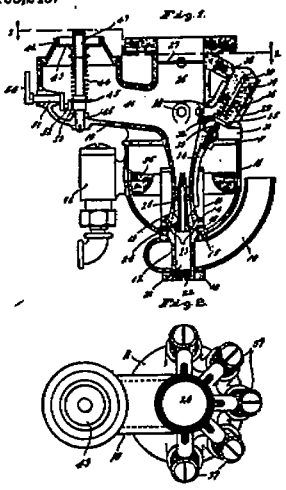

Witnesses
[illegible]
[illegible]

Inventor
George M. Scheibler
by [illegible]
Attorney

G. P. RETTIG.
CARBURETER.
APPLICATION FILED SEPT. 5, 1910

1,040,414. Patented Oct. 8, 1912.

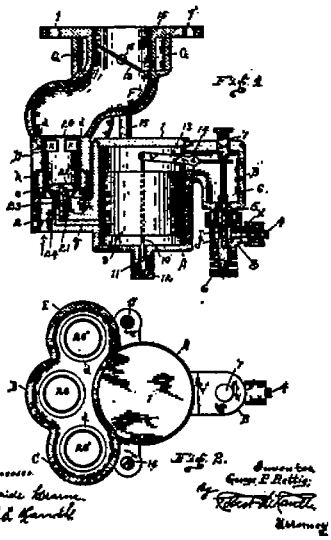

Witnesses
Adelaide Hamm
[illegible]

Inventor
George P. Rettig
by [illegible]
Attorney

G. P. RETTIG.
CARBURETER.
APPLICATION FILED SEPT. 5, 1910

1,040,414. Patented Oct. 8, 1912.

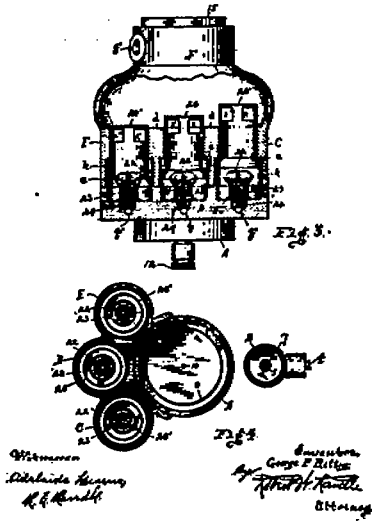

Witnesses
Adelaide Hamm
[illegible]

Inventor
George P. Rettig
by [illegible]
Attorney

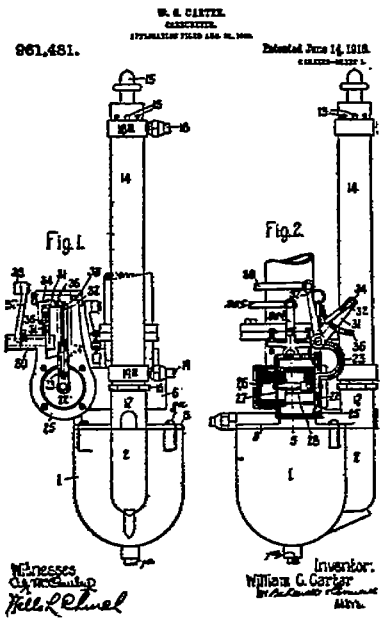
W. C. CARTER.
CARBURETER.
961,481.
Patented June 14, 1910.
Fig. 1.
Fig. 2.
Witnesses
Inventor:
William C. Carter

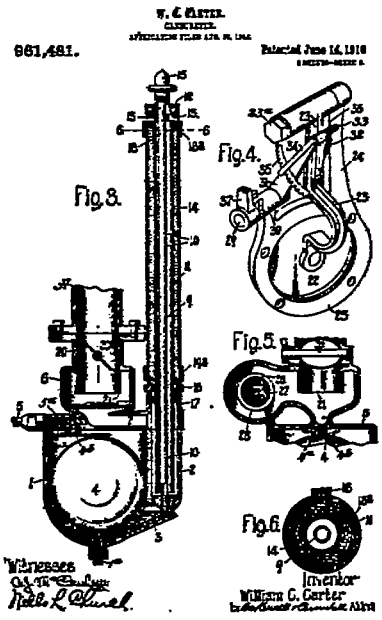
W. C. CARTER.
CARBURETER.
961,481.
Patented June 14, 1910.
Fig. 3.
Fig. 4.
Fig. 5.
Fig. 6.
Witnesses
Inventor
William C. Carter

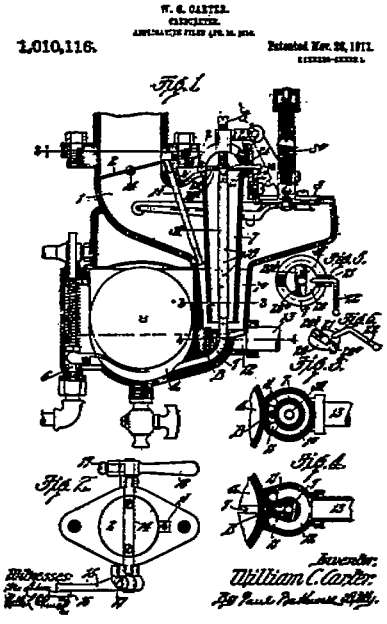
W. C. CARTER.
CARBURETER.
1,010,116.
Patented Nov. 28, 1911.
Fig. 1.
Fig. 2.
Fig. 3.
Fig. 4.
Fig. 5.
Fig. 6.
Witnesses
Inventor:
William C. Carter

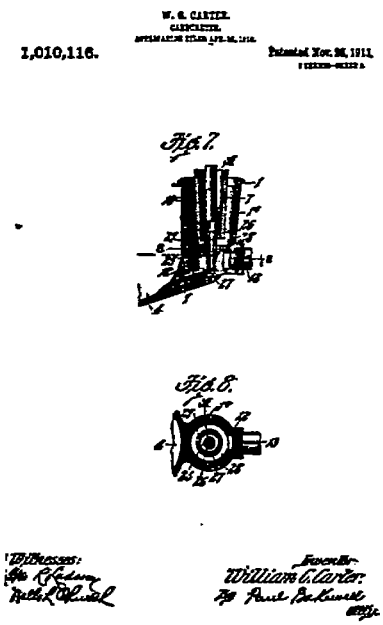
W. C. CARTER.
CARBURETER.
1,010,116.
Patented Nov. 28, 1911.
Fig. 7.
Fig. 8.
Witnesses:
Inventor
William C. Carter

A. C. BENNETT.
CARBURETER.
APPLICATION FILED MAR. 19, 1917.

1,133,527. Patented Mar. 30, 1915.

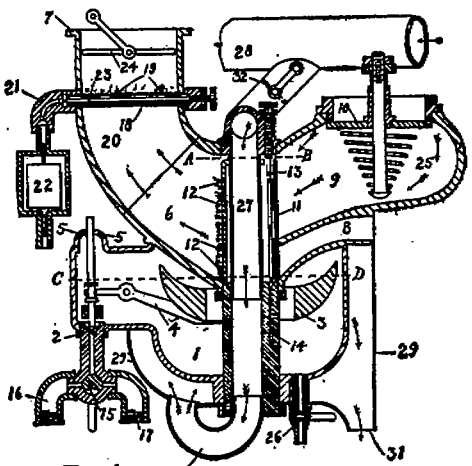

Fig. 1

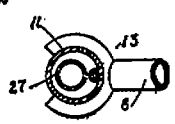

Fig. 2

Witnesses
H. A. Bowman.

Inventor
Ashley C. Bennett
By F. A. Whitley
His Attorney

G. KINGSTON.
CARBURETER.
APPLICATION FILED JAN. 5, 1915.

1,168,513. Patented Jan. 18, 1916.
3 SHEETS—SHEET 1.

Fig. 1.

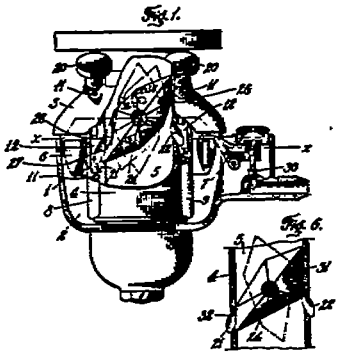

Fig. 6.

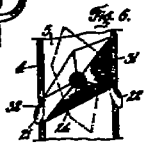

Witnesses
Chas. W. Smith
Geo. Oh. Smith

Inventor
George Kingston,
By Crosby & Gregory
Attorneys

G. KINGSTON.
CARBURETER.
APPLICATION FILED JAN. 5, 1915.

1,168,513. Patented Jan. 18, 1916.
3 SHEETS—SHEET 2.

Fig. 2.

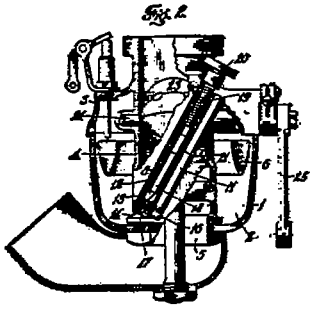

Witnesses
Chas. W. Smith
Geo. Oh. Smith

Inventor
George Kingston,
By Crosby & Gregory
Attorneys

G. KINGSTON.
CARBURETER.
APPLICATION FILED JAN. 5, 1915.

1,168,513. Patented Jan. 18, 1916.
3 SHEETS—SHEET 3.

Fig. 3.

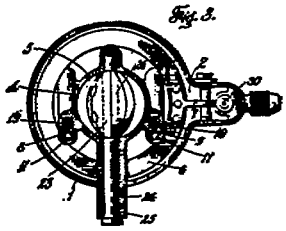

Fig. 5.

Fig. 4.

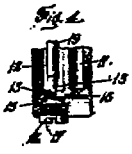

Witnesses
Chas. W. Smith
Geo. Oh. Smith

Inventor
George Kingston,
By Crosby & Gregory
Attorneys

ellipsoidal, so that when closed it fills the passage completely shutting off one fuel inlet but allowing the other to act for idling by a notch opening.

Class 11—Carburetors, proportioning flow, aspirating, single or multiple fuel inlets with regulating valves, single or multiple fixed air inlets.—All the classes and subclasses so far examined had fuel inlets, the area of which did not vary with flow, all changes of fuel flow were necessarily the result of corresponding changes in the vacuum due to the air flow, and any departure from constancy of proportion remained uncorrected, or some compensation by suitable control of the air-flow area or the fuel head was introduced. The remaining classes and subclasses, beginning with this one, are all characterized by regulating fuel valves, however actuated or associated with air inlets, fixed or valved for regulation. This class itself includes all cases of regulating fuel valves used in conjunction with fixed-air passages. It is clearly possible to secure proportionality or proper compensation by varying the fuel-inlet area, increasing it where the flow is insufficient due to a low air vacuum, and decreasing it otherwise, but, as in other cases, the real problem is one of degree, because the area adjustment must be just right in amount. Moreover, the fuel-inlet area is always extremely small in proportion to that for the air, and especially so in carburetors where a very high vacuum is used to induce flow, so that any fuel-inlet adjustment must be extremely precise and fine in comparison with an equivalent air-area adjustment.

The cases of this class are grouped under several subclasses and will be examined under their several group headings.

Subclass 11.1—Single fuel-inlet valve, throttle control.—On page 359 (727,972, May 12, 1903, Kingston) rotation of the barrel-throttle lifts the fuel-needle valve by rotating it in its fixed screw-threaded casing. No direct reliance is placed on vacuum control of proportionality, but the idea is that proportionality of flow should follow proportionality of areas provided for fuel and air or mixture flow, respectively, which, of course, is not feasible at all for variable speed engines and questionable even for those of constant speed. The same idea is involved in the form on page 359 (873,392, Dec. 10, 1907, Stoker), where the fuel-needle valve is lifted by a link from the throttle as the latter opens, and on page 359 (1,055,042, Mar. 4, 1913, Higgins), which has an iris throttle and an adjustable fulcrum-needle valve-lifting lever. A rotating fuel valve regulating three fuel inlets, equivalent to one, by a throttle linkage is shown on page 359 (1,120,183, Dec. 8, 1914, Duff), and having as well a throttle-controlled secondary air inlet. Another form that merely illustrates the cam idea of securing any desired numerical relation between the fuel area and that for air or mixture flow is shown on page 360 (1,124,697, Jan. 12, 1915, Carter).

Subclass 11.2—Single fuel inlet, independently controlled by air flow or vacuum.—One fairly old case, that on page 361 (725,741, Apr. 21, 1903, Miller), indicates an appreciation of the desirability of regulating the fuel flow by adjusting its area to some prime variable of air flow. In this case air volume and velocity constitute the variable to actuate a fan-blade type of air motor, which in turn rotates a flyball governor, and this in lifting opens the fuel needle, a

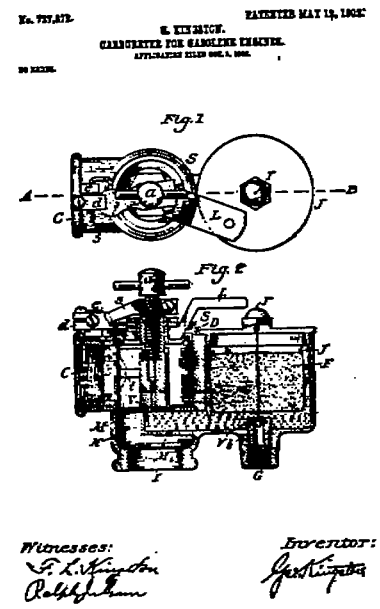
Fig. 1
Fig. 2
Witnesses:
Inventor:

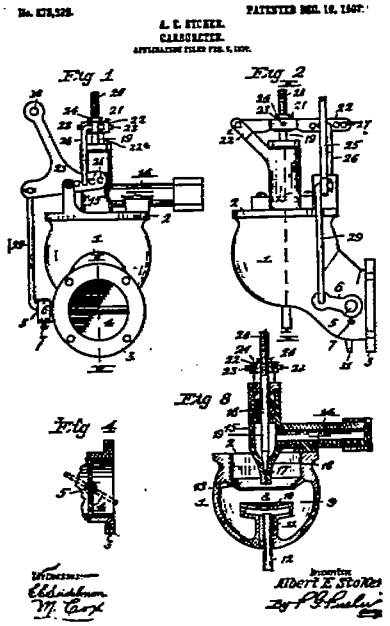
Fig 1
Fig 2
Fig 3
Fig 4
Inventor
Albert E. Stokes

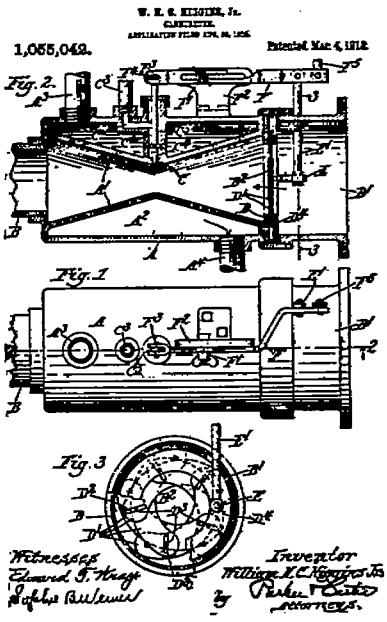
1,055,042.
Patented Mar. 4, 1913.
Fig. 2.
Fig. 1
Fig. 3
Witnesses
Inventor

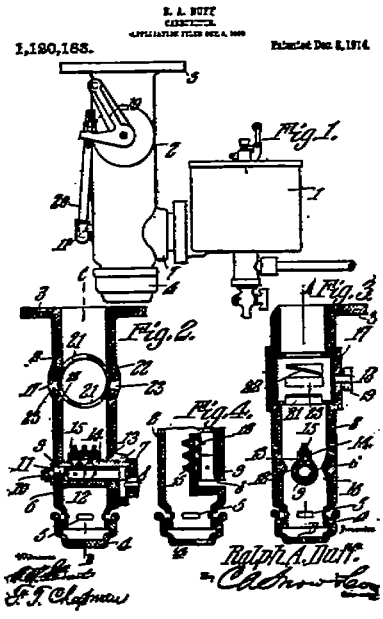
1,120,183.
Patented Dec. 8, 1914.
Fig. 1.
Fig. 2.
Fig. 3.
Fig. 4.
Ralph A. Duff.

W. O. CARTER.
NEEDLE VALVE OPERATING MECHANISM FOR CARBURETERS.
APPLICATION FILED OCT. 2, 1911.

1,124,697. Patented Jan. 12, 1915.

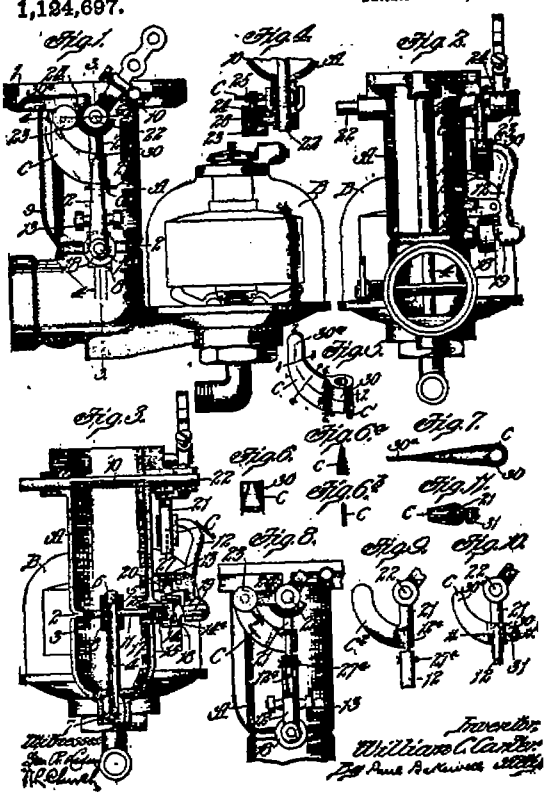

No. 756,741. PATENTED APR. 12, 1904.

C. A. MILLER.

FUEL FEED REGULATOR FOR EXPLOSIVE ENGINES.

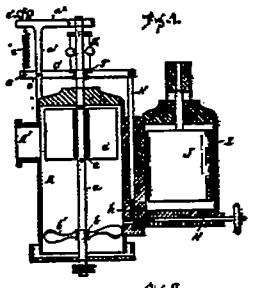

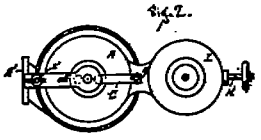

No. 798,119. PATENTED DEC. 5, 1905.

P. & G. LONGEMARE.

CARBURETER FOR EXPLOSIVE MOTORS.

FIG. 1

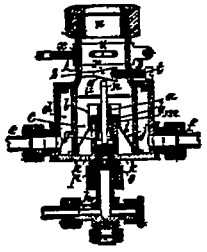

FIG. 2

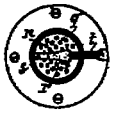

1,065,503. Patented June 24, 1913.

J. STACH.

CARBURETER.

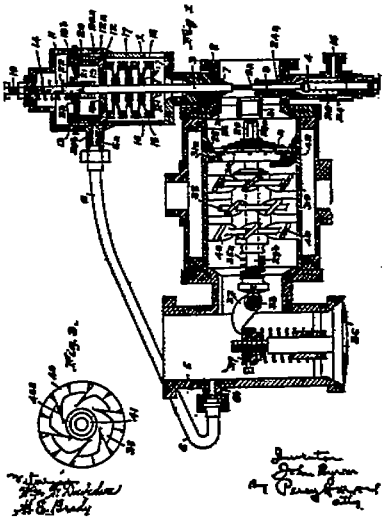

1,065,503. Patented June 24, 1913.

J. STACH.

CARBURETER.

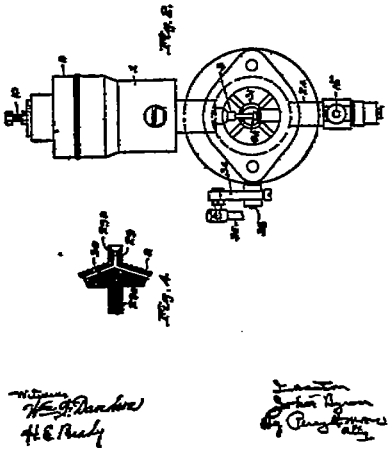

No. 771,088. PATENTED SEPT. 27, 1904.

E. C. RICHARD.

CARBURETER FOR EXPLOSION ENGINES.

APPLICATION FILED JAN. 11, 1904.

NO MODEL.

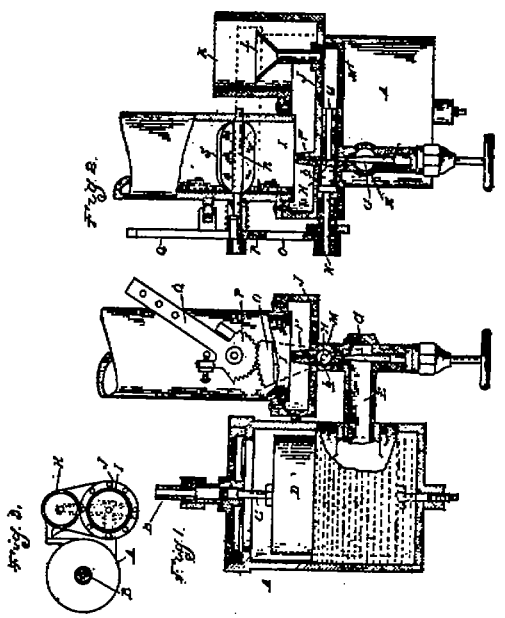

Witnesses:
Jas. F. Clegg.
W. E. Smith.

Inventor:
Eugene C. Richard
By James Whittemore
Atty.

somewhat roundabout procedure rather full of mechanical difficulties. A more direct action is provided in the form on page 361 (746,119, Dec. 8, 1903, Longumare & Longumare), where the fuel needle is lifted by a perforated flow disk raised by air velocity, the lift of which can not be graduated properly without some more definite provisions than shown, in fact it is questionable whether this is a regulating needle at all or merely a fuel stop or check valve of class 1. A long tapered fuel needle is actuated by the vacuum beyond the throttle or air valve, by a sort of bellows type of diaphragm, on page 361. (1,065,503, June 24, 1913, Byron.) The fuel valve is placed before the air valve which acts as throttle, and a series of mixing baffles are located beyond for mixing. The case is interesting mainly as an example of direct vacuum control of a fuel-needle valve.

Subclass 11.3—Mixed flow.—One case only will serve to illustrate mixed flow compensation, in connection with a regulating-fuel valve having the same object, that on page 362. (771,096, Sept. 27, 1904, Richard.) The fuel valve is a rotating plug, gear connected to the throttle, fuel from the float chamber and air from the main intake are brought to a common point, flowing together to the fuel nozzle as the fuel valve may permit a somewhat queer complexity.

Class 12—Carburetors, proportioning flow, aspirating, single fuel and air inlets, both with regulating valves.—In point of numbers this is about the largest of the classes, indicating the popularity of the idea of control of both quantity and proportionality by two valves, one for fuel and the other for air, by their respective areas. As a class it is both old and new, the difference being in the means of actuating the two valves or in relating them to each other as will appear in the subclasses, some of which are typically old, and others mainly recent. In many cases the idea of flow-area control of quantities has led to a neglect of the equally potent influence of vacuum, put in general such mistakes belong to the older cases though, of course, some persist as inventors are not necessarily well informed.

A few cases are grouped under the general headings because of difficulty in meeting the subclass definitions with precision, and one of these is shown on page 370. (973,855, Oct. 25, 1910, Cannon.) A rotating sleeve throttle for a fixed air passage moves a rotating cap over an arc-shaped fuel slot to regulate the fuel valve with the throttle, but auxiliary air is admitted through another throttle port, after passing an automatic valve, controlled by the exhaust back pressure or a pump delivery pressure, acting on a diaphragm. Another such mixed case is that on page 370 (1,045,251, Nov. 26, 1912, Bourne), where the essential feature is a level tilting control of a fuel-needle valve by a pendulum, as the body of the carburetor changes level. On page 370 (1,061,995, May 20, 1913, Erickson), the fuel and air valves are controlled together, partly by the vacuum and partly by a centrifugal ball governor driven by an air motor in the main stream. A power-driven shaft carries a fan and a centrifugal ball governor, the former controlling the air drawn through an automatic valve, and the latter controlling the fuel needle, as shown in the combination shown on page 371 (1,123,876, Jan. 5, 1915, Hiddleson), which is somewhat questionable as a proportioning flow carburetor, but suggestive.

Two ideas are illustrated in the costruction on page 371 (1,169,574, Jan. 25, 1916, Schulz), a recent case—first, the combination of the throttle and the automatic air-inlet valve carrying the fuel needle, and, second, the formation of a series of more or less parallel thin baffles to act as fuel lifters and sprayers. With reference to the latter point, it is clear that some definite means of lifting the fuel above the air valve and throttle from the fuel nozzle is necessary, because the nozzle is located in a region of very low vacuum and low air velocity. Here the baffles serve as inclined planes up which the fuel is swept by the air flow concentrated between them and moving at velocities that do not vary as much as in the main air passage, because as air flow increases and the valve lifts, more of these cross-flow passages come into action. While the proportionality characteristics of this air valve is free, the interference with its lift by the cam acting on the stem to serve as throttle reduces the case to one of throttle control with different proportionality characteristics.

Subclass 12.1—Valved fuel inlet beyond air-inlet valve acting as throttle, fuel valve controlled by air valve.—Mechanically, this is a very simple combination, applicable to only constant-speed engines with any hope of success, but not at all useful for variable-speed engines, as the variations of vacuum on the fuel inlet tend to upset and interfere with area adjustments. One of the early cases intended for stationary engines is that on page 372. (623,568, Apr. 25, 1899, Secor.) This has two cocks, one for fuel and one for air, controlled by the governor and linked together. A rotating slide air valve linked to a lifting fuel needle produces similar results, as shown on page 372. (654,894, July 31, 1900, Hasbrouck.) A rotating screw-threaded fuel needle linked to an air plug cock is shown on page 372 (695,060, Mar. 11, 1902, Krastin), and a screw-threaded rotating air valve carrying a fuel needle valve, both moving together toward or away from their respective seats fixed in the casing, is shown on page 372 (711,902, Oct. 21, 1902, Leppo & Leppo). A rotating cylindrical sleeve form of air valve carrying a fuel needle threaded into a fixed seat is the mechanism on page 373. (745,063, Nov. 24, 1903, Jenness.) Two long taper valves, one for air and the other for fuel, fastened together and moved mechanically as one, constitute the form on page 373. (791,810, June 6, 1905, Orr.) A screw-threaded fuel valve geared to a rotating air slide is shown on page 373. (816,477, Mar. 27, 1906, Kellogg.) A tapering arc slot form of fuel valve on a rotating spindle has a cam connection to a swing type of air valve, in the form shown on page 374. (909,490, Jan. 12, 1909, Westaway.) The iris air valve linked to a threaded fuel needle is shown on page 374. (926,039, June 22, 1909, Warren.)

Adaptability of the fuel valve linked to an air valve in front of it, to the two-cycle engine transfer port is shown on page 374. (1,013,955, Jan. 9, 1912, Roberts.) In this case the air valve is of the curved swing-check form, and the fuel inlet is located in a bend so that the passing air always sweeps the fuel nozzle. This arrangement, like many others illustrated, keeps the crank case free of mixture, a matter of very considerable importance with the less volatile fuels. A long tapered fuel needle carried in the stem of an air poppet valve, flat seated, both moving mechanically as one, is shown

on page 375. (1,028,723, June 4, 1912, Hezinger.) Another form of the longer tapered fuel needle carried by a flat-seated air valve but of different shape is shown on page 375. (1,086,594, Feb. 10, 1914, Goldberg.) Still another such fuel valve, but associated with a tapered air valve, is shown on pages 375 and 376. (1,145,824, July 6, 1915, Udale.) A cam connection of fuel needle to a barrel air valve is shown on page 376. (1,172,595, Feb. 22, 1916, Heath & Taylor.)

The present-day tendency to seek fuel passages having definite regular flow laws to be associated with structures giving similarly definite relations between flow and vacuum is again illustrated in the following case of another form of capillary fuel-flow passage, the outlet from which is controlled by a fuel valve moving with the air valve. On pages 376 and 377 (1,190,124, July 4, 1916, Lukacsevics & Terrill) a fibrous pad is inserted in the ports of the annular fuel passage, resisting the fuel flow under the influence of the vacuum so that it follows the capillary law with respect to pressure, the exposed fuel-flow area varies with the air-flow area by the movement of a pair of sleeve valves.

Subclass 122—Valved fuel inlet between air inlet valve and throttle, both fuel and air valves controlled by the throttle.—The location of the fuel inlet, typical of this class, between the air valve and the throttle represents a conscious effort to control the vacuum at the fuel valve as it could not be controlled in the last subclass, but the linkage of both the air and the fuel valve to the throttle, while giving somewhat better control, is poorly adapted to variable-speed engines though quite a satisfactory and much-used arrangement with stationary engines.

A rotating cylindrical barrel with two opposite ports, one for air and the other serving as throttle with the fuel inlet in its body and a threaded fuel valve actuated by the same movement, is one very simple form of this type and is shown on page 378. (795,357, July 25, 1905, Maxwell.) Two poppets, one air and one throttle, with a fuel needle valve between, are all operated together by cams on page 378. (805,979, Nov. 28, 1905, Menges.) The combination of a damper throttle with a cam-actuated fuel needle *and* a rotating flat air valve is shown on pages 378 and 379. (848,425, Mar. 26, 1907, Anderson.) Another case of sleeve barrel, acting as air valve and throttle on opposite edges, is shown on page 379 (883,740, Apr. 7, 1908, Poppe) with a slide form of fuel valve in the center. Two damper valves and a threaded fuel needle between them are shown linked together on page 379. (910,326, Jan. 19, 1909, Stevenson.) An old form of annular tapered air valve linked to a damper throttle and carrying a fuel needle actuating cam, is shown on page 379. (983,247, Jan. 31, 1911, Miller.) A series of three linked dampers with a cam-actuated fuel needle is shown on page 380 (1,011,696, Dec. 12, 1911, Winton) with a by-pass air and fuel passage leading to a point between the second and third dampers as an idling yet. Two dampers on the same spindle with the fuel inlet in a return bend, its valve being cam connected to the air and throttle spindle, is shown in 1,033,886, July 30, 1912, Gentle.

A piston sliding in a cylindrical passage with side ports acts as both air valve and throttle, and moving on a ported hollow rod which is the fuel-supply passage, successively opening a series of holes to

increase the fuel area is illustrated on pages 380 and 381. (1,080,815, Dec. 9, 1913, Everest.) A rotating cylindrical sleeve acting as air valve and throttle is shown on page 381. (1,085,003, Jan. 20, 1914, Austin), carrying a fuel valve cam on one edge formed by tapering it. Another multiported fuel valve, this time with a helically slotted sleeve linked to a pair of damper valves, is shown on page 381. (1,125,069, Jan. 19, 1915, Coulter.) The combination of long tapered fuel needle and tapered air throat, with the air valve, the needle, and the throttle moving together is shown on pages 381 and 382. (1,143,-511, June 15, 1915, Cox.) A later form of the plug valve serving as both air valve and throttle with a fuel inlet in the middle is shown on pages 382 and 383. (1,183,587, May 16, 1916, Parkin.) In this case the fuel has the sliding sleeve form, is cam operated, and a separate idling jet is provided, leading directly from the float chamber. It is interesting to compare this with the early case on page 378 (795,357, Maxwell).

Subclass 12.3, valved fuel inlet at or in front of air valve acting as throttle, fuel valve controlled by air valve.—When the fuel inlet is in front of the air valve or just in line it receives none of the vacuum due to air entrance which is so high when the valve is closed, and which makes fuel regulation so difficult. Located thus, the fuel flow is induced wholly by the velocity head vacuum of the air or substantially so, and the addition of a fuel valve gives wider scope in location and compensation, though it is clear that there is no essential relation between the two areas, air and fuel, when the speed is variable. On page 384 (930,724, Aug. 10, 1909, Boore) rotating slotted cone acts as air valve, and its movement also actuated the fuel valve which is in front and receives only the vacuum of air flow before entrance. One odd form is that on page 385 (977,044, Nov. 29, 1910, Rebourg), where a warped surface constitutes a variable tapered throat at the small diameter of which the fuel inlet is located. The fuel valve of sleeve type is actuated by the same movement as varies the air throat. A fuel needle valve is attached to an air slide on page 385 (1,053,136, Feb. 11, 1913, Daellenbach), and operated with the throttle, but it is not clear how this can have any influence. A recent form, that on pages 385 and 386 (1,184,923, May 30, 1916, Carter), provides a cam connection between the fuel needle and a damper, but adds, what is characteristic of the later days of heavy fuel, a low-speed lifting tube for the main jet above the throttle.

Subclass 12.4—Valved fuel inlet between automatic air inlet valve and throttle, fuel valve controlled by throttle.—Air admission through an automatic valve is the direct means of preventing much rise of vacuum beyond it as air flow increases, and if gravity loaded the rise may be regarded as practically nothing, though, of course, variably loaded valves with springs may be made to build up vacuum to any desired degree. Association of a fuel valve with an automatic air inlet is a logical thing, especially so if the valve is of the sort that limits the vacuum change to a small value, because in this case the vacuum will not increase enough with air flow to produce a sufficient fuel flow, so an increase of fuel-flow area is the natural and proper correction. It is not, however, at all logical to associate this fuel-valve movement and flow-area increase with the throttle, because throttle position does not determine flow rate any more than speed in general practice, though, of course, there is a closer, indirect relation

for the constant-speed class of engine. This being the case, one would expect the carburetors of this class to be designed for constant-speed engines only, yet such is not the case.

In the form shown on page 387 (755,074, Mar. 22, 1904, Sturtevant & Sturtevant) air enters through an automatic spring-loaded valve, and the fuel needle is linked to the throttle. A separate fuel and air inlet for idling by-passes the throttle. An illustration of the stationary-engine adoption of this sort of arrangement is given on page 387 (947,633, Jan. 25, 1910, Brady), where an ordinary fly-ball governing throttle on the mixture-inlet pipe has also a connection to the fuel valve, so throttle and fuel valve vary together, air entering the mixing chamber through an automatic air-check valve. This case also illustrates the heating of such a mixing chamber by exhaust gases to promote vaporization, which when carried out to the necessary degree becomes a means of conversion of a gasoline into a heavier oil engine. A direct cam connection between a damper throttle and the fuel needle is shown on page 388 (961,590, June 14, 1910, England), with an automatic air inlet. Another form involving double-swing type of automatic air valves, and a sliding form of fuel valve formed by a slot in a sleeve with sliding plunger operated from the throttle, is shown on page 388. (1,066,608, July 8, 1913, Harris.) An arrangement of the air inlet to develop the maximum-velocity action at the jet without flow-entrance resistance and its building up of vacuum is shown on pages 388 and 389. (1,042,982 originally, reissued as 13,837, Dec. 1, 1914, Sliger.) Location of the fuel valve within the stem of the throttle, associated with an automatic main air-inlet valve, is illustrated on page 389. (1,132,314, Mar. 16, 1915, Eiker.)

Subclass 12.5—valved fuel inlet between automatic air-inlet valve and throttle, fuel valve controlled by automatic air valve.—As a simple logical arrangement for securing not only the desired proportionality control but also the least entrance resistance and maximum density of mixture, nothing appeals so directly and strongly as this. The large number of cases in the subclass is itself an indication that this fact is becoming appreciated, especially as so many are comparatively recent, and there is every evidence that this subclass will displace in interest and use the former popular subclass, 8.2, of fixed fuel and primary air with automatic secondary air.

While the general idea of actuating a fuel valve by an automatic air valve is very old, the germ being found in those cases of class 1 developed directly from the natural-gas mechanism of stationary engines and first used with pressure fuel supplies. The appreciation of requirements for suitable and proper graduation in the interest of proportionality and least pressure drop is comparatively recent, and its growth can be traced in the cases of this subclass fairly well.

The first case, that on page 390 (770,559, Sept. 20, 1904, Clay), shows a spring loaded air check valve with the fuel valve in front of it where the vacuum inducing fuel flow is very small, but the mixture entering the air valve suffers a considerable and increasing pressure drop. However, the long taper needle now generally called a "metering pin" is clearly shown, and the valve seat has a small angle taper showing an understanding of the relation between axial movement and area and the necessity for considerable movement for precise graduation. Many later forms fail in some of these points of

construction. An indirect movement of a common form of fuel needle through a cam by a spring-loaded automatic valve is shown on page 390. (807,479, Dec. 19, 1905, Mason.) On page 390 (818,853, Apr. 24, 1906, Renault) a form of sliding fuel valve is used, but the automatic air valve is gravity loaded as is proper for the case, and, even though it has sharp edges with a low coefficient of efflux, it is provided with a long slight taper seat, the good effects of which are largely destroyed by the restriction about the spraying cone. A return to the long fuel-metering pin and its association with a gravity-loaded long-taper automatic air valve is shown on page 391. (826,531, July 24, 1906, Briest.) A gravity swing check actuating an ordinary needle is shown on page 393 (892,155, June 30, 1908, Hodges), and a lever-operated metering pin linked to a spring-loaded automatic air valve on page 393 (926,848, July 6, 1909, Carlson). Another form of swing air check, gravity loaded, is shown on page 393 (895,709, Aug. 11, 1908, Abernethy & Abernethy), this time associated with a rotating plug fuel valve, that constitues the spindle of the air valve. A fuel valve consisting of a pair of flat sector slides moving over a circular row of fuel orifices is shown on page 393. (941,424, Nov. 30, 1909, Leonard.) The fuel valve movement is produced by a helically twisted stem of the spring loaded automatic air valve as it lifts. An annular automatic air valve, spring loaded, is shown as lifting a very long fuel-metering pin, at the lower end of which is a dash pot piston in the fuel on page 394. (971,038, Sept. 27, 1910, Gulick.)

The problem of lifting the fuel in such low-velocity air streams as are typical of this class is recognized on page 395 (984,874, Feb. 21, 1911, Winton), which places the fuel valve at a high point and operates it by a yoke from the stem of a spring-loaded air valve with a liquid dashpot. This same lifting problem is attacked differently on page 395 (995,623, June 20, 1911, Miller), which has the low-speed lifting tube above the throttle as found in other classes. Here the automatic air valve is of the swing-check form and operates the fuel valve by a cam. A piston form of gravity-loaded automatic air valve carrying a fuel-metering pin on one side and having a separate low-speed fixed jet, is shown on page 395. (1,006,411, Oct. 17, 1911, Scott.) A long-taper gravity-loaded air valve rising in a narrow seat and guided by a fixed central spindle carries a tube at the lowest point of its stem, into which projects a fixed tapered fuel pin, as shown on page 396. (1,010,003, Nov. 28, 1911, Stewart.) The lifting problem is attacked by passing some air directly across the fuel-lifting tube to produce the necessary aspirating effect. The stem itself contitutes a dashpot plunger. On page 396 (1,032,307, July 9, 1912, Stewart) the metering pin is moved to the air-valve head and the fuel is discharged through radial holes into the stream of air, while on page 396 (1,049,417, Jan. 7, 1913, Stewart) the fuel valve is located in a side pocket open to the atmosphere and is actuated from the air valve by a lever. From this pocket all the measured fuel and some atmospheric air that has not been measured by the air valve are carried above the throttle, being heated by the exhaust on the way. Of course, with a wide-open throttle and low engine speeds there is no assurance that there would be sufficient vacuum to lift fuel in this way as high as might be necessary.

A long metering pin fixed in a long-taper hollow air-valve stem, gravity loaded, discharges its fuel directly into the air-valve seat where, of course, the velocity is greatest on pages 396 and 397. (1,050,059, Jan. 7, 1913, Gould.) An odd form of gravity-loaded air valve, lifted indirectly by the vacuum, is shown on page 397 (1,088,231, Feb. 24, 1914, Lawrence), which carries the metering pin on its end directly in the air path. On page 397 (1,115,951, Nov. 3, 1914, Martin) the fuel inlet is in the form of a straight slot exposed in varying degree by a piston form of automatic air valve, spring loaded. The metering pin itself is formed on the end of the air-valve stem on page 398 (1,120,128, Dec. 8, 1914, Browne) and lifts by aspiration through the hollow portion of the stem above, discharging at the air-valve seat radially. An electrical fuel heater is also provided.

Two automatic air valves, both spring loaded, join their air streams and therefore act as one on page 398. (1,123,048, Dec. 29, 1914, Washburn.) One of them lifts the fuel-metering pin and the fuel escapes into the combined air stream at the entrance to a sort of choke tube. A recent case, on pages 398 and 399 (1,130,350, Mar. 2, 1915, Thompson), uses a gravity-loaded hollow piston with tapered entrance, in the center of which is fixed a tapered plug carrying the fuel passage. The metering pin is in its top and lifts with the piston through a cam, permitting the fuel to flow radially into the high-velocity air. A pair of swing checks on opening lift the metering pin, so fuel is discharged directly in the path of the high-velocity air in the form shown on page 399. (1,143,779, June 22, 1915, Pembroke.)

An unusual form of heavy double air valve, gravity loaded, with a central fixed metering pin and air valve seat discharge, is shown on page 399 (1,145,172, July 6, 1915, Speed), also provided with ball-valved dashpot. Another case of fixed central coincal taper plug, this time with a cylindrical sleeve valve lifting around it by the action of the vacuum on a gravity loaded annular piston, is shown on page 400. (1,149,291, Aug. 10, 1915, Richard). The metering pin is given a peculiar curved form necessary for proportionality with this form of air valve, instead of curving the air valve itself or its seat. A small idling air hole is provided at a throttle slide. An adjustably fixed metering pin, seated in a hole in the stem of a gravity loaded air valve, is shown on page 400 (1,159,029, Nov. 2, 1915, Hodges), the fuel lifting being accomplished at low speeds by a fixed by-pass for aspirating air.

Direct lift of a multiorificed sleeve form of fuel valve, by the movement of a swing air check, directing the air across it, is illustrated on page 400. (1,162,680, Nov. 30, 1915, Buick.) Incorporation of the dashpot within the gravity air valve, and the use of mercury for loading it, are illustrated on page 401. (1,172,397, Feb. 22, 1916, Shulz.) These features are associated with a lever operated metering pin at the side, discharging at orifices around the air valve seat in the path of the entering air. A case of indirect action is that on page 401 (1,179,568, Apr. 18, 1916, Shortt), which has two diaphragms, one operating the air inlet, and another valve in series with it having fuel orifices in its seat. A threaded needle valve is rotated with the air inlet valve.

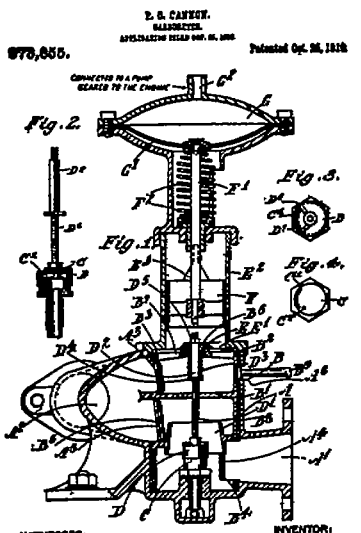
973,655.
Patented Oct. 25, 1910.
Fig. 2.
Fig. 3.
Fig. 4.
WITNESSES:
INVENTOR:

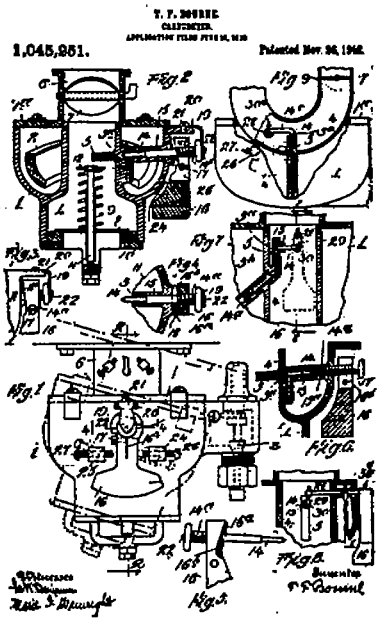
1,045,951.
Patented Nov. 26, 1912.
Fig. 1
Fig. 2
Fig. 3
Fig. 4
Fig. 5
Fig. 6
Fig. 7
Fig. 8
Fig. 9

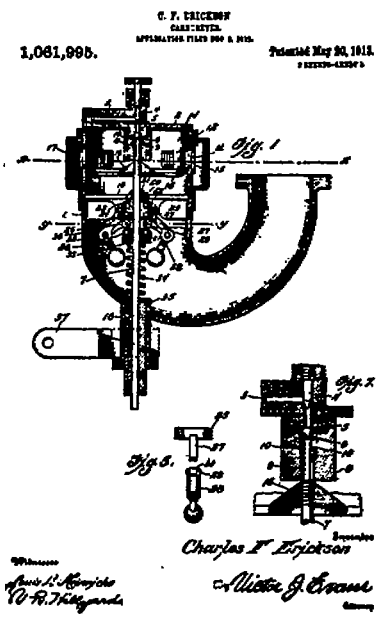
1,061,995.
Patented May 20, 1913.
Fig. 1
Fig. 2
Fig. 3
Charles F. Erickson
Inventor
Witnesses

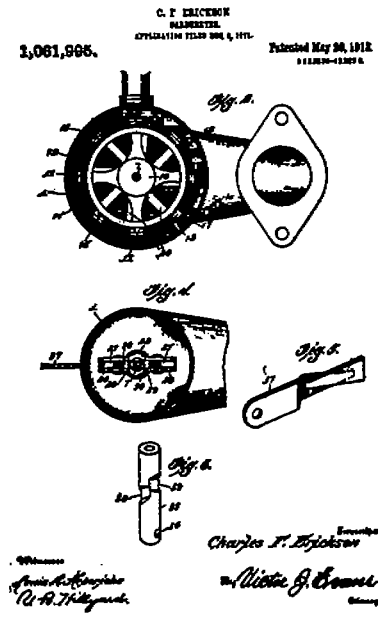
1,061,995.
Patented May 20, 1913.
Fig. 4
Fig. 5
Fig. 6
Fig. 7
Charles F. Erickson
Inventor
Witnesses

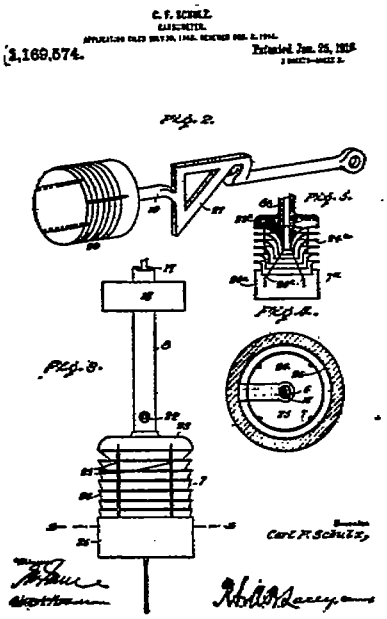
C. F. SCHULZ.
1,169,574.
Fig. 2.
Fig. 3.
Fig. 4.
Fig. 5.

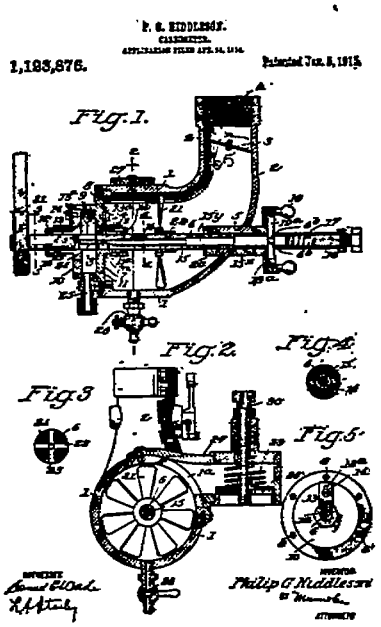
1,183,876.
Fig. 1.
Fig. 2.
Fig. 3
Fig. 4.
Fig. 5.

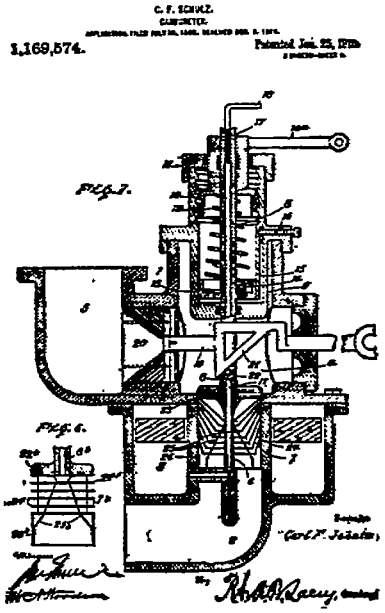
C. F. SCHULZ.
1,169,574.
Fig. 7.
Fig. 6.

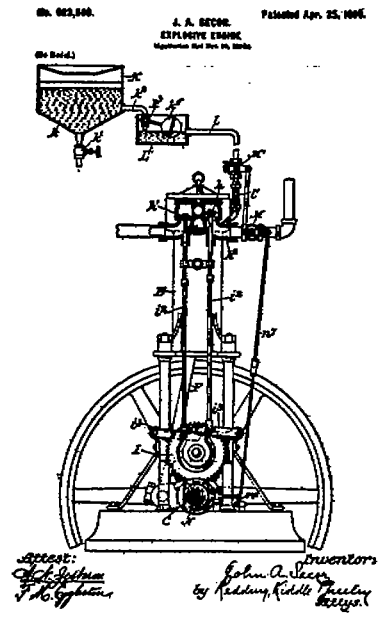
J. A. SECOR.
EXPLOSIVE ENGINE.
Witnesses:
Inventor:
John A. Secor
by Redding, Kiddle & Greeley
Attys.

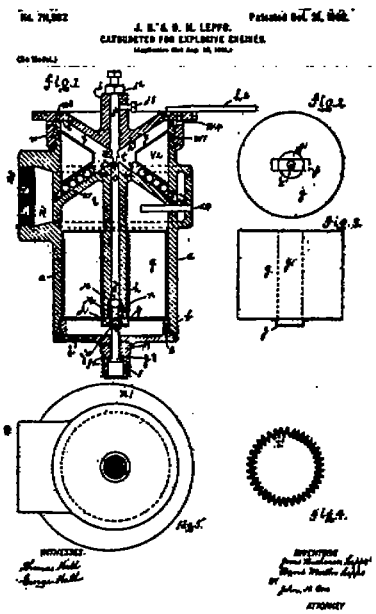
J. E. & G. H. LEPPE.
CARBURETER FOR EXPLOSIVE ENGINES.
Fig. 1
Fig. 2
Fig. 3
Fig. 4
Fig. 5
Witnesses:
Inventors:
Attorney

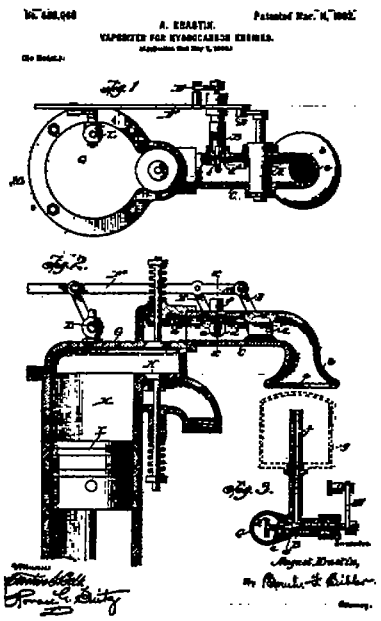
A. KRASTIN.
VAPORIZER FOR HYDROCARBON ENGINES.
Fig. 1
Fig. 2
Fig. 3
August Krastin,
by Pennie & Bitter
Witnesses

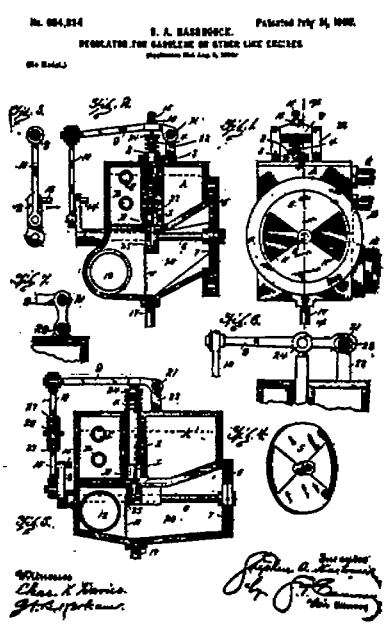
S. A. HASBROUCK.
DEVICE FOR GASOLINE OR OTHER LIKE ENGINES.
Fig. 1
Fig. 2
Fig. 3
Fig. 4
Fig. 5
Fig. 6
Witnesses
Chas. K. Morris
Inventor

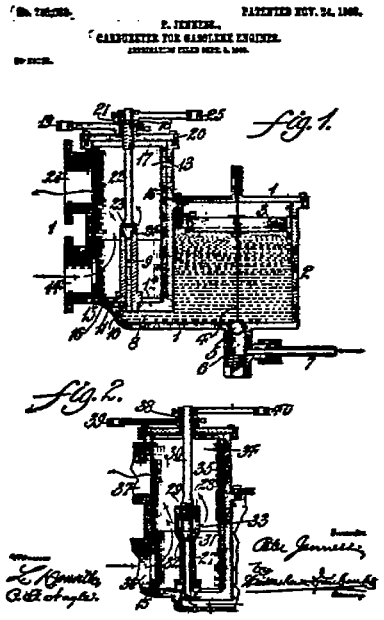
Fig. 1.
Fig. 2.

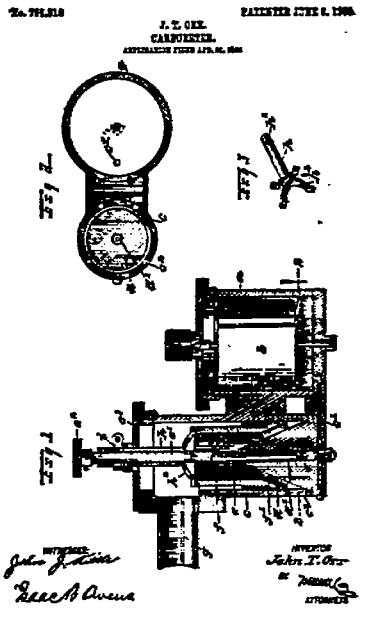

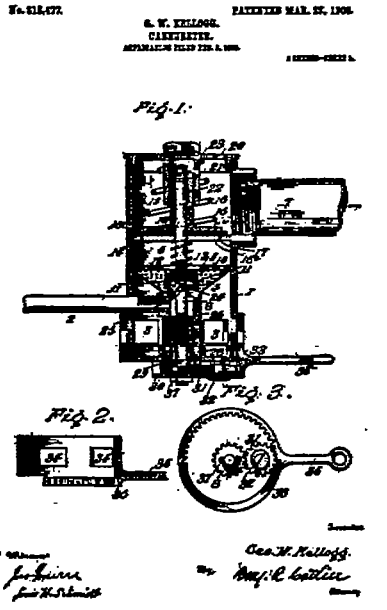
Fig. 1.
Fig. 2.
Fig. 3.

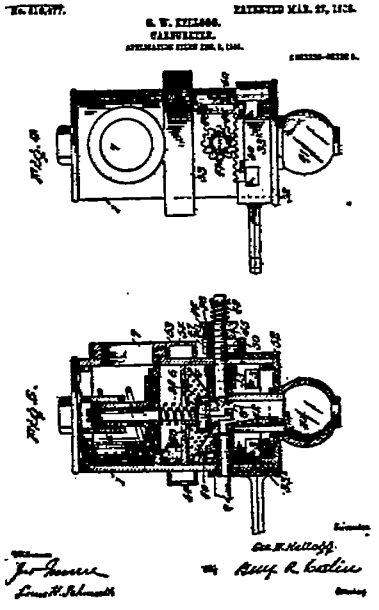

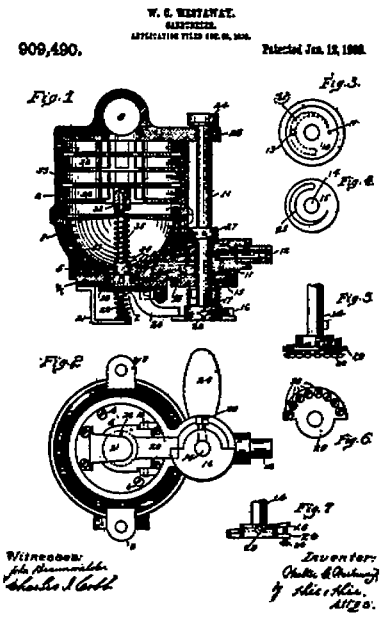
W. C. WESTNEAT.
909,490.
Fig. 1
Fig. 2
Fig. 3
Fig. 4
Fig. 5
Fig. 6
Fig. 7
Witnesses:
Inventor:

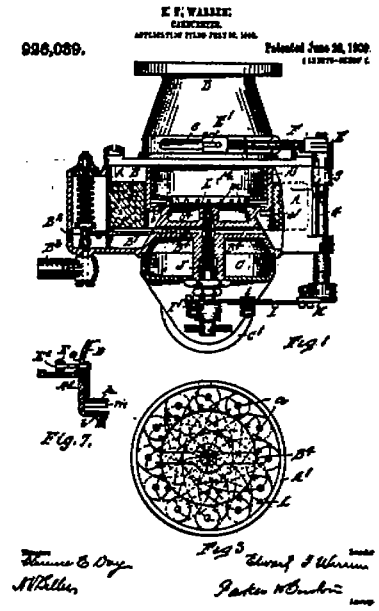
E. F. WARREN.
926,039.
Fig. 1
Fig. 7
Fig. 3

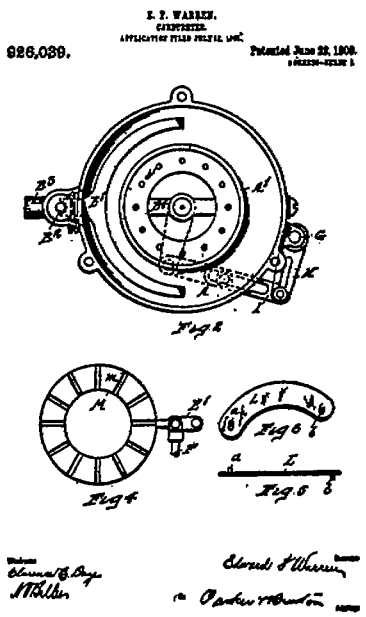
E. F. WARREN.
926,039.
Fig. 2
Fig. 4
Fig. 5
Fig. 6

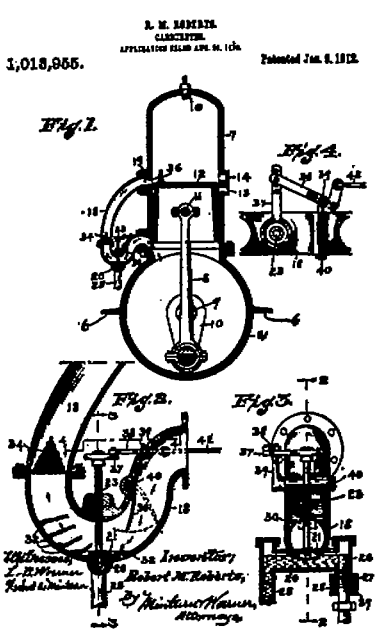
R. M. ROBERTS.
1,018,955.
Fig. 1
Fig. 2
Fig. 3
Fig. 4
Inventor:
Robert M. Roberts,
Attorney.

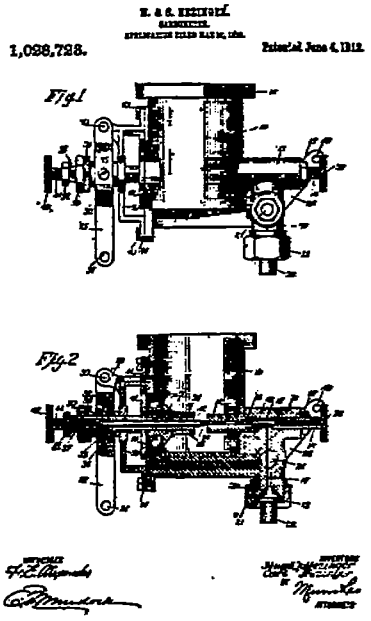
1,038,728.
Fig. 1
Fig. 2

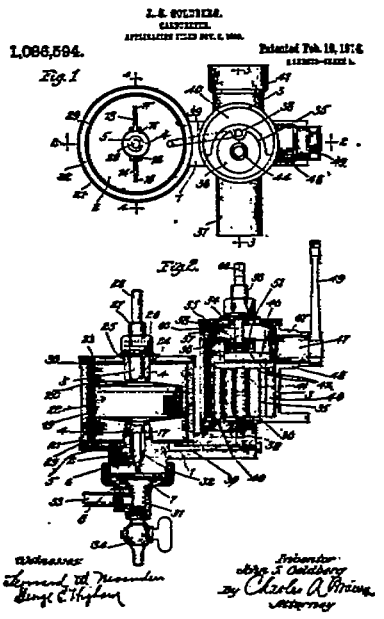
1,066,594.
Fig. 1
Fig. 2

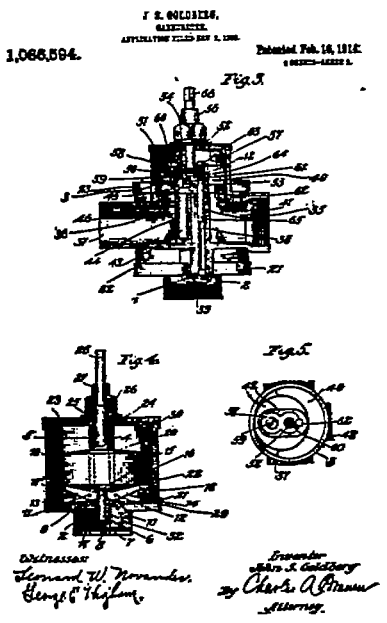
1,066,594.
Fig. 3
Fig. 4
Fig. 5

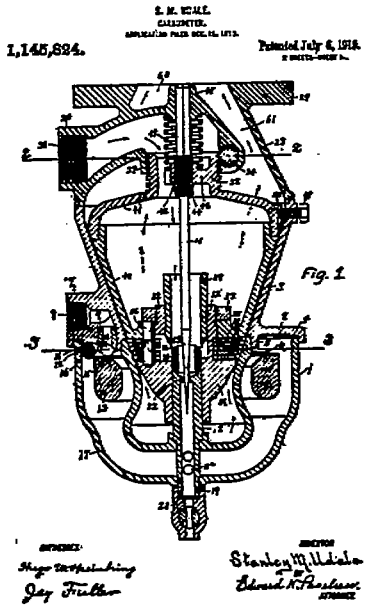
1,145,824.
Fig. 1

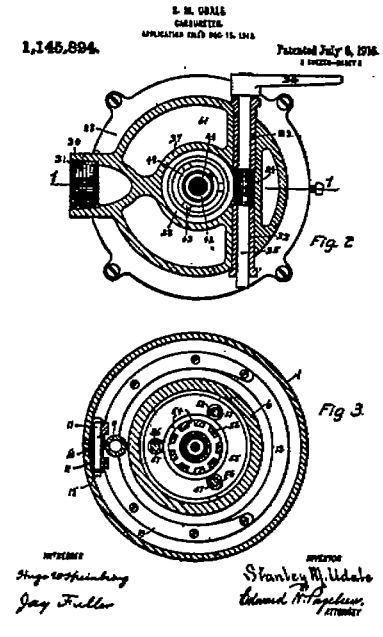
1,145,894.
Patented July 6, 1915.
Fig. 2
Fig 3.
Stanley M. Udale

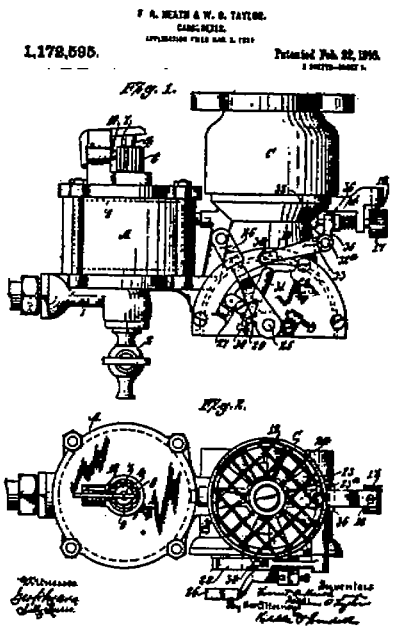
1,172,595.
Patented Feb. 22, 1916.
Fig. 1.
Fig. 2.

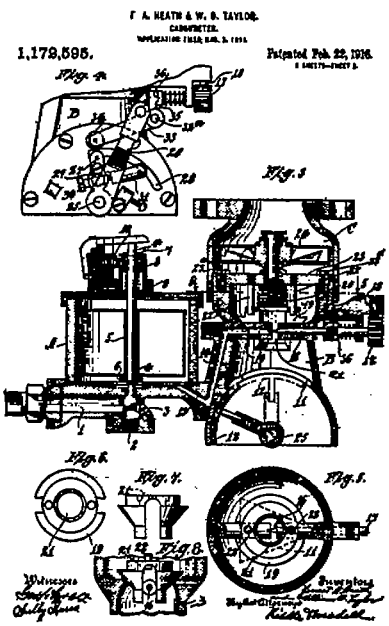
1,172,595.
Patented Feb. 22, 1916.
Fig. 3
Fig. 4.
Fig. 5.
Fig. 6.
Fig. 7.
Fig. 8.

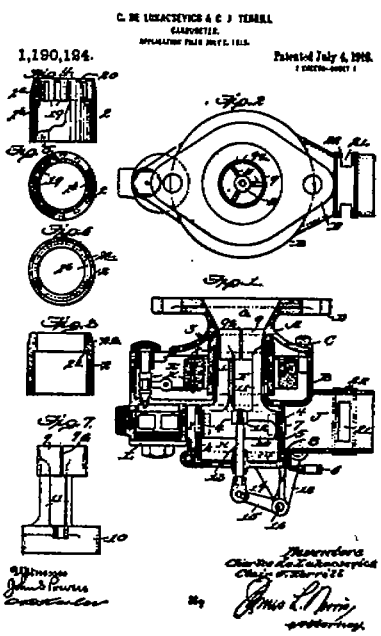
1,190,124.
Patented July 4, 1916.
Fig. 2
Fig. 3
Fig. 4
Fig. 5
Fig. 6
Fig. 7

C. DE LUKACSEVICS & C. J. TERRELL.
CARBURETER.
APPLICATION FILED JULY 7, 1915.

1,190,124. Patented July 4, 1916.
2 SHEETS—SHEET 2.

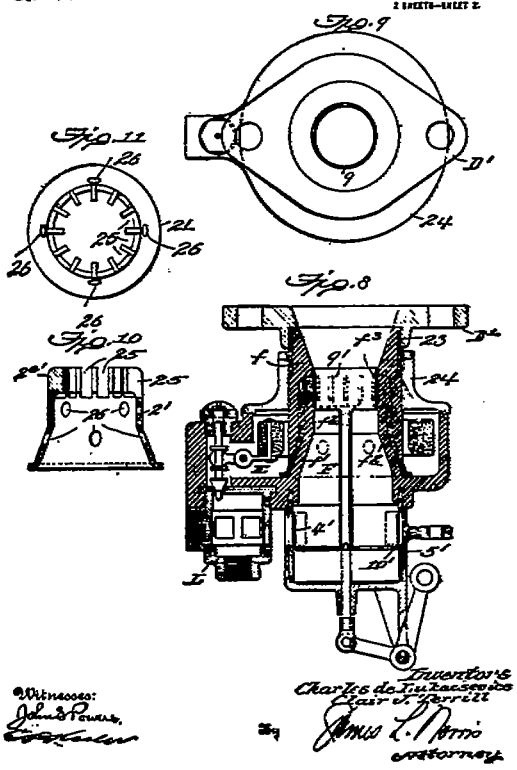

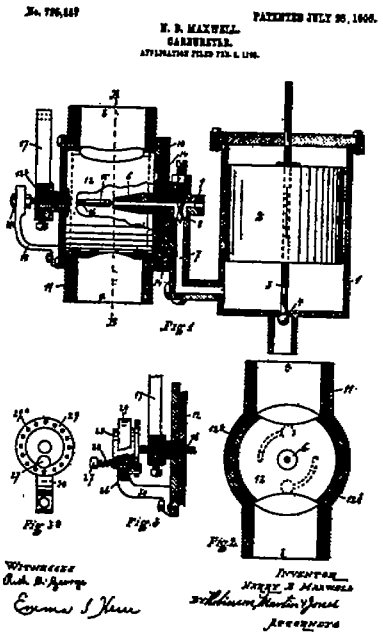
PATENTED JULY 26, 1906.
H. B. MAXWELL.
CARBURETER.
Fig. 1
Fig. 2
Fig. 3
Fig. 4
Witnesses
Inventor
Henry B. Maxwell
By Attorneys

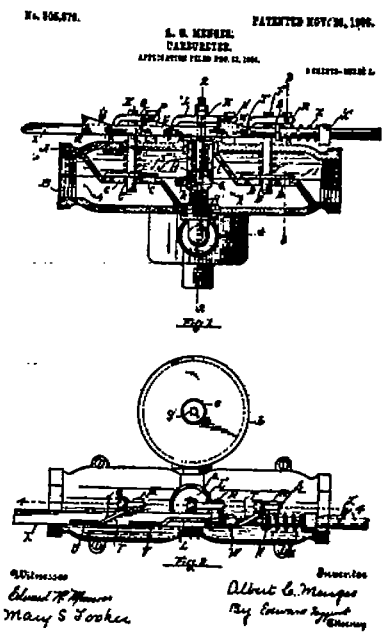
PATENTED NOV. 26, 1906.
A. C. MENGES.
CARBURETER.
Fig. 1
Fig. 2
Witnesses
Edward H. Munn
Mary S. Tooker
Inventor
Albert C. Menges
By Edward Trippe
Attorney

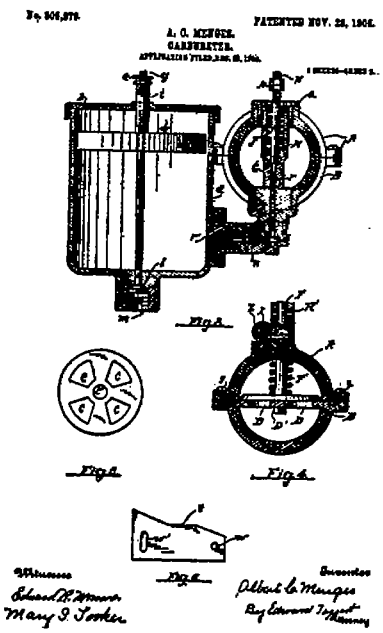
PATENTED NOV. 20, 1906.
A. C. MENGES.
CARBURETER.
Fig. 3
Fig. 4
Fig. 5
Fig. 6
Witnesses
Edward H. Munn
Mary S. Tooker
Inventor
Albert C. Menges
By Edward Trippe
Attorney

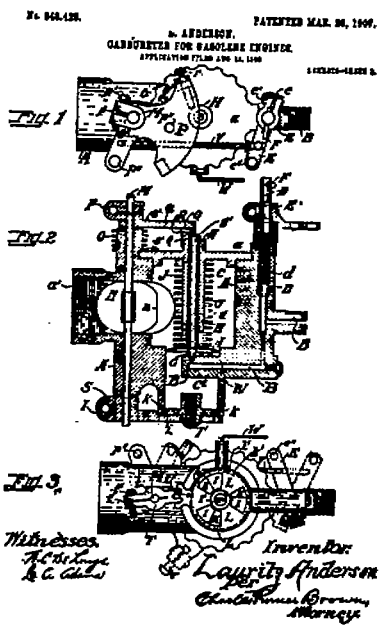
PATENTED MAR. 26, 1907.
L. ANDERSON.
CARBURETER FOR GASOLENE ENGINES.
Fig. 1
Fig. 2
Fig. 3
Witnesses
Inventor
Lauritz Anderson
per
Attorneys

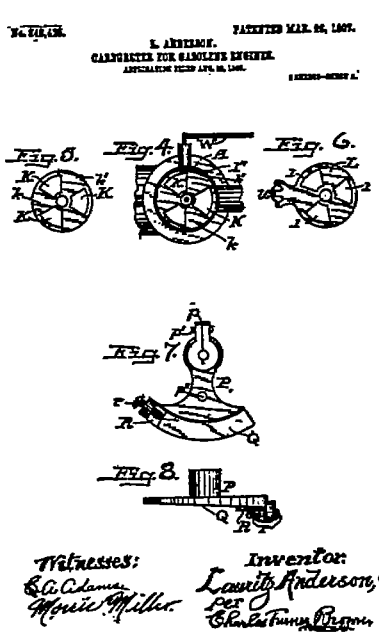
L. ARENIUS.
CARBURETER FOR GASOLENE ENGINES.
Fig. 5.
Fig. 4.
Fig. 6.
Fig. 7.
Fig. 8.
Witnesses:
Inventor:
Lauritz Anderson,
per
Charles Fenny Burgess.

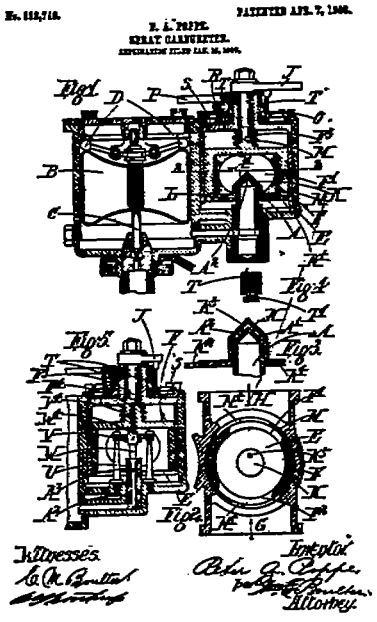
PATENTED APR. 7, 1908.
R. A. PRIPE.
GERAT CARBURETER.
Fig. 1
Fig. 2
Fig. 3
Fig. 4
Fig. 5
Witnesses.
Inventor
Attorney.

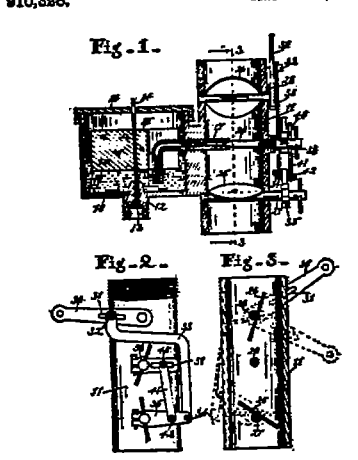
E. M. STEVENS.
CARBURETER.
910,326.
Patented Jan. 19, 1909.
Fig. 1.
Fig. 2.
Fig. 3.
Witnesses.
Inventor.
Edgar M. Stevens.
Attorney

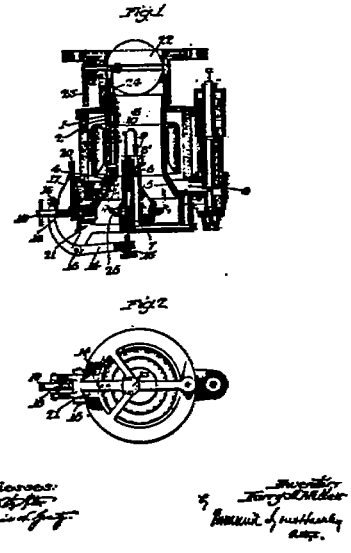
E. A. MILLER.
CARBURETER.
988,247.
Patented Jan. 31, 1911.
Fig. 1
Fig. 2
Witnesses:
Inventor
Attorney.

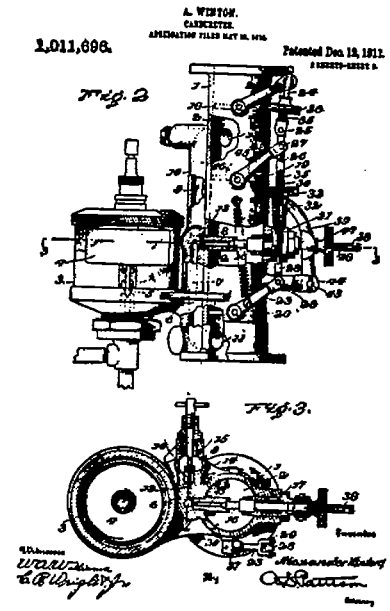
A. WINTON.
CARBURETER.
1,011,696.
Patented Dec. 12, 1911.
Fig. 2
Fig. 3.

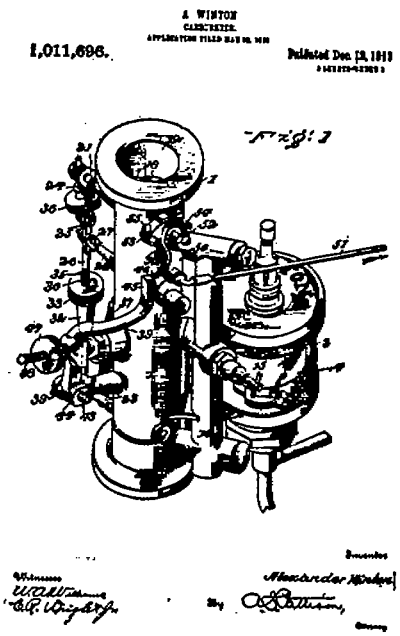
A. WINTON.
CARBURETER.
1,011,696.
Patented Dec. 12, 1911
Fig. 1

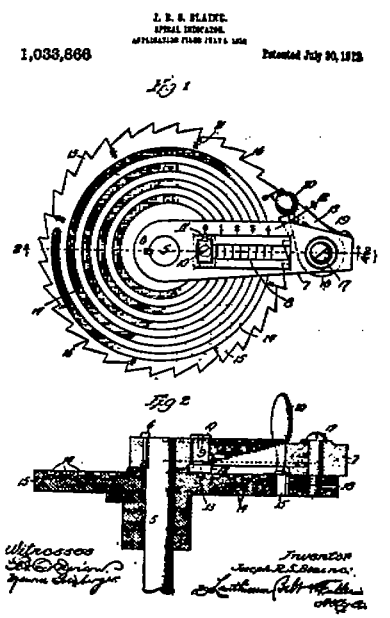
J. R. S. PLAINE.
SPIRAL INDICATOR.
1,033,866
Patented July 30, 1912
Fig 1
Fig 2
Witnesses
Inventor

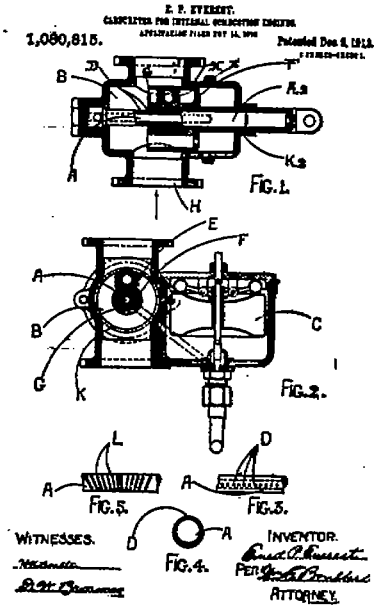
E. P. EVERETT.
CARBURETER FOR INTERNAL COMBUSTION ENGINES.
1,060,815.
Patented Dec. 6, 1913.
FIG. 1.
FIG. 2.
FIG. 3.
FIG. 4.
FIG. 5.
WITNESSES.
INVENTOR.
ATTORNEY.

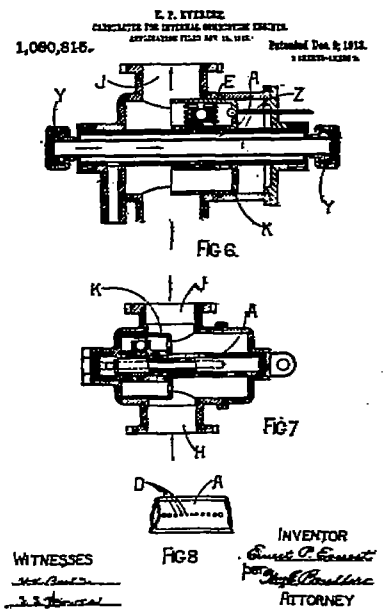
1,060,815.
Fig 6.
Fig 7
Fig 8
WITNESSES
INVENTOR
ATTORNEY

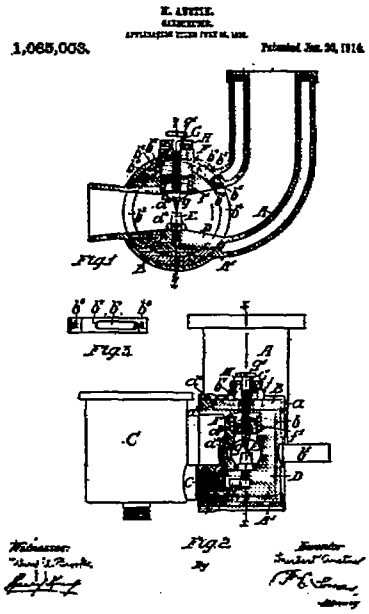
1,065,003.
Fig 1
Fig 2
Fig 3

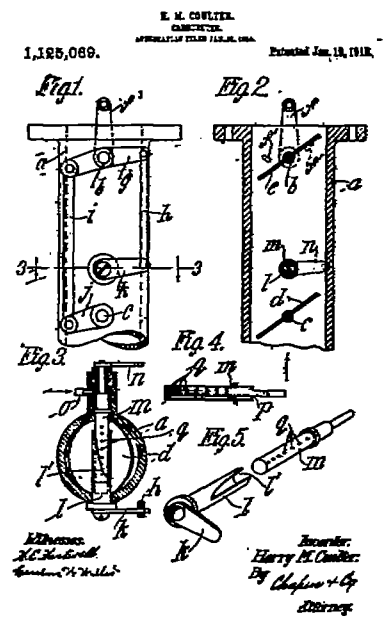
1,125,069.
Fig 1.
Fig 2
Fig 3
Fig 4.
Fig 5.

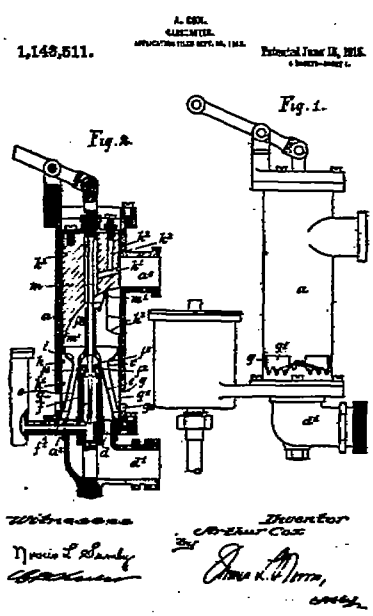
1,143,511.
Fig. 1.
Fig. 2.
Inventor
Arthur Cox

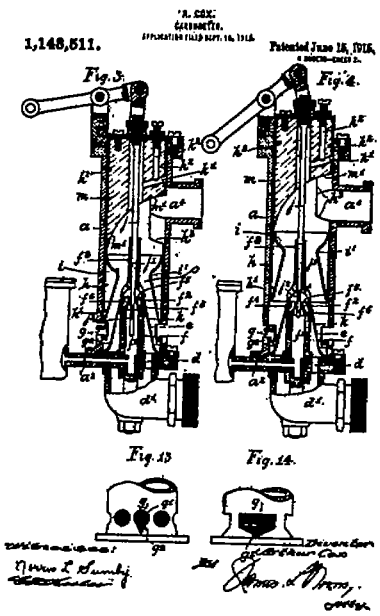
A. COX.
CARBURETER.
1,148,511.
Patented June 15, 1915.
Fig. 3.
Fig. 4.
Fig. 13
Fig. 14.
Witnesses:
Inventor
Arthur Cox

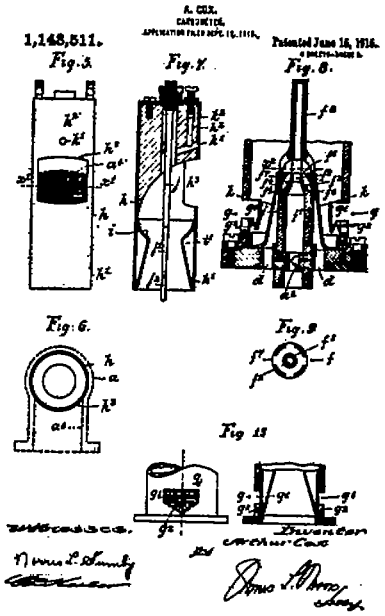
A. COX.
CARBURETER.
1,148,511.
Patented June 15, 1915.
Fig. 3.
Fig. 7.
Fig. 8.
Fig. 6.
Fig. 9
Fig 13
Witnesses:
Inventor
Arthur Cox

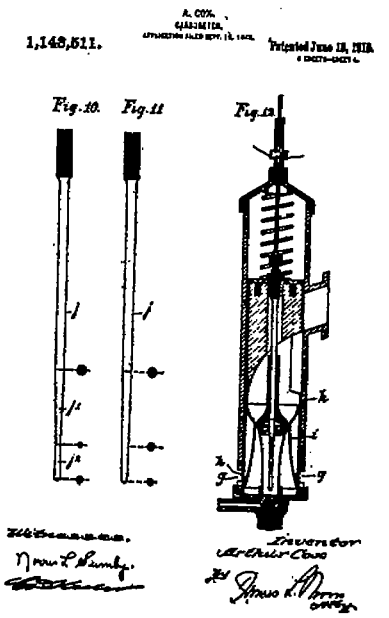
A. COX.
CARBURETER.
1,148,511.
Patented June 15, 1915.
Fig. 10.
Fig. 11
Fig. 12
Witnesses:
Inventor
Arthur Cox

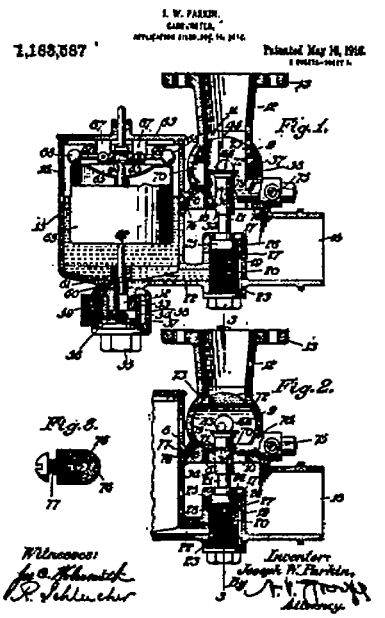
J. W. PARKIN.
CARBURETER.
1,163,587
Patented May 16, 1916.
Fig. 1.
Fig. 2.
Fig. 3.
Witnesses:
Inventor
Joseph W. Parkin

J. W. PARKIN.
CARBURETER.
APPLICATION FILED DEC. 16, 1914.

1,183,587. Patented May 16, 1916.
2 SHEETS—SHEET 2.

Fig. 3.

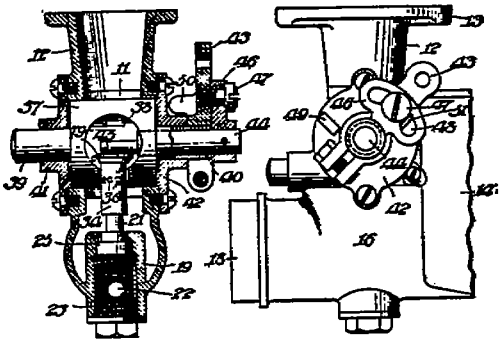

Fig. 4.

Fig. 5.

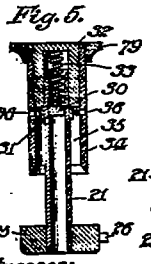

Fig. 6.

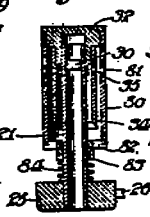

Fig. 7.

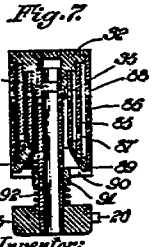

Witnesses:
Jas. E. Nolan Smith
R. Schlueter.

Inventor:
Joseph W. Parkin.
By A. J. Tonkin
Attorney.

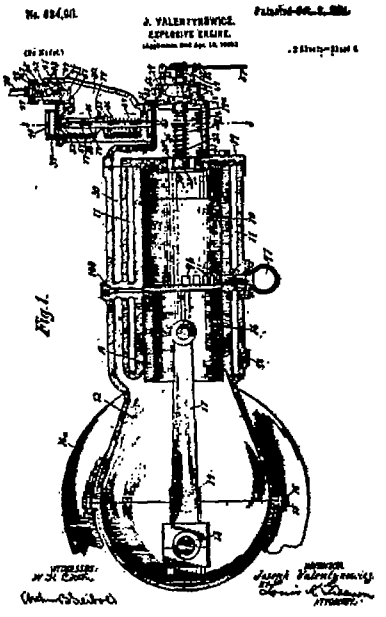
J. VALENTYNOWICZ.
EXPLOSIVE ENGINE.
Fig. 1.

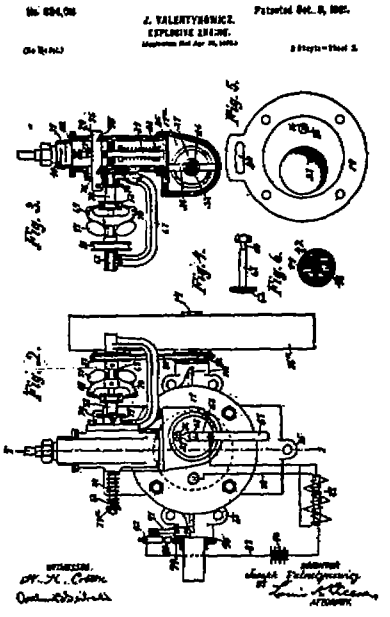
J. VALENTYNOWICZ.
EXPLOSIVE ENGINE.
Fig. 2.
Fig. 3.
Fig. 4.
Fig. 5.
Fig. 6.

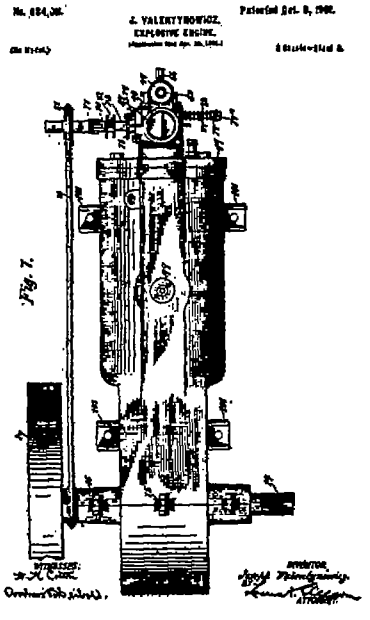
J. VALENTYNOWICZ.
EXPLOSIVE ENGINE.
Fig. 7.

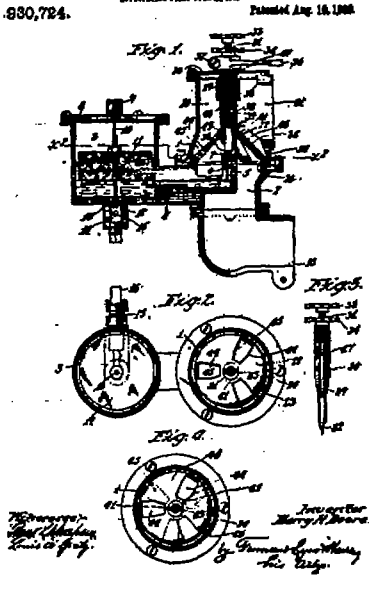
830,724.
Fig. 1.
Fig. 2.
Fig. 3.
Fig. 4.

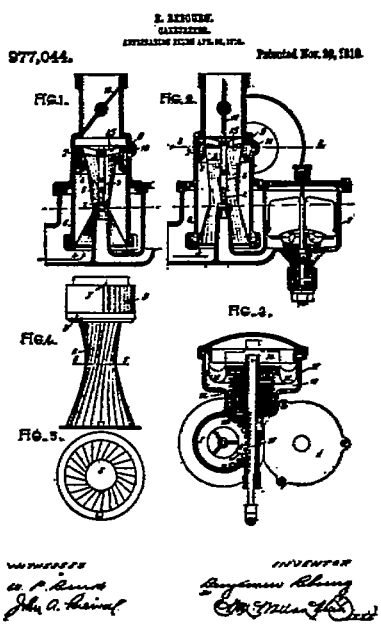
977,044.
Fig.1.
Fig.2.
Fig.3.
Fig.4.
Fig.5.

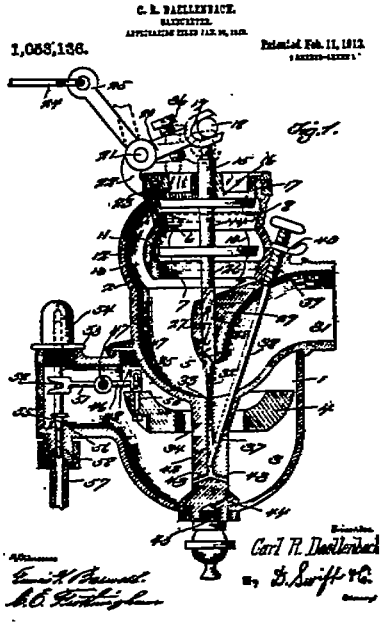
1,058,136.
Fig.1.
Carl R. Dahlenbach

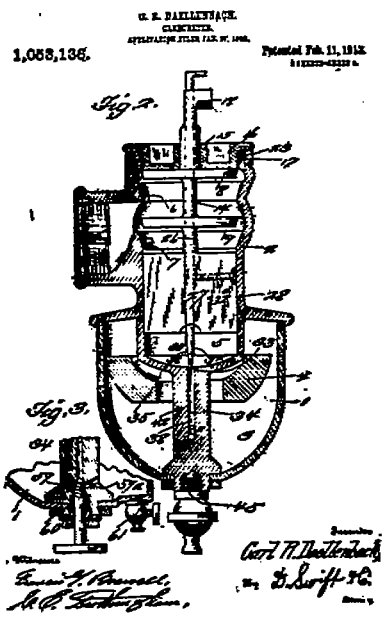
1,058,136.
Fig.2.
Fig.3.
Carl R. Dahlenbach

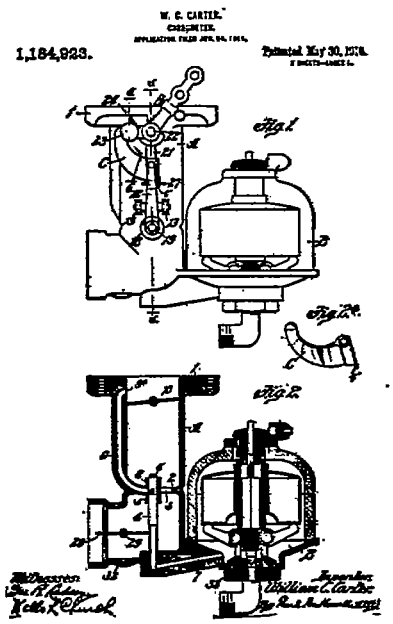
1,184,923.
Fig.1.
Fig.2.
Fig.3.

W. C. CARTER.
CARBURETER.
APPLICATION FILED APR. 24, 1914.

1,184,923. Patented May 30, 1916.
2 SHEETS—SHEET 2.

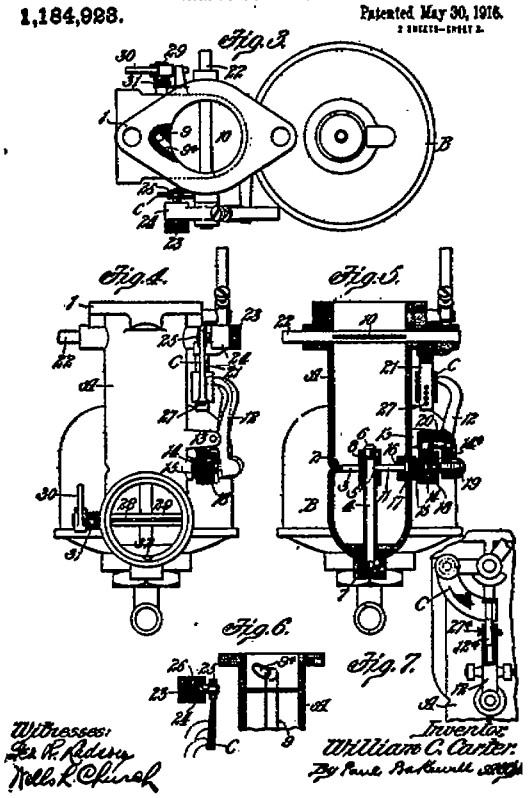

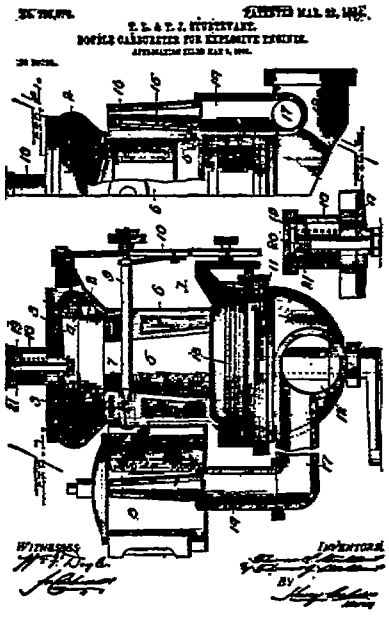

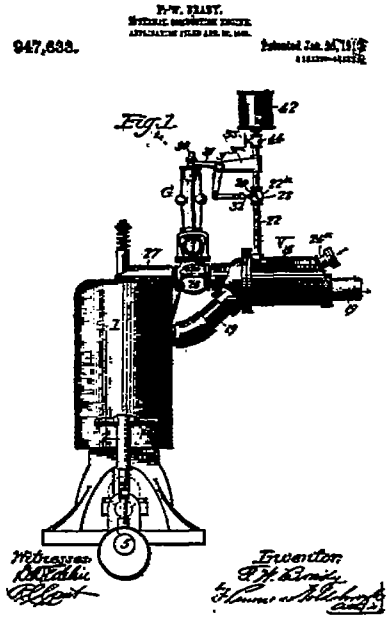
947,633.
Fig. 1.
Witnesses:
Inventor:

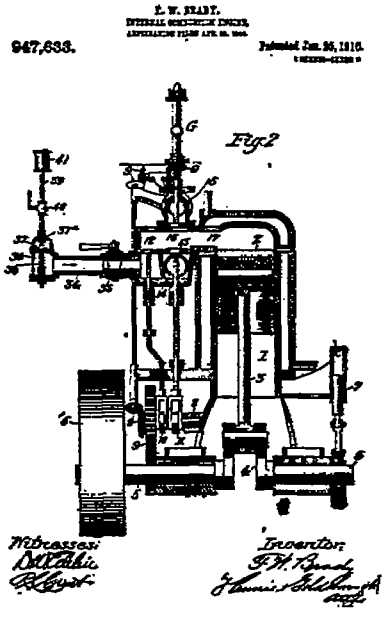
947,633.
Fig. 2
Witnesses:
Inventor:

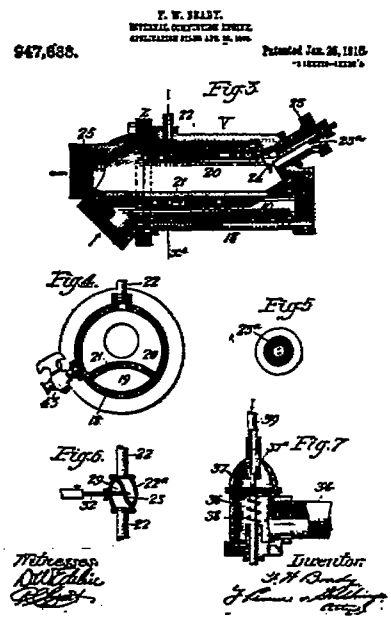
947,633.
Fig. 3
Fig. 4.
Fig. 5
Fig. 6.
Fig. 7
Witnesses:
Inventor:

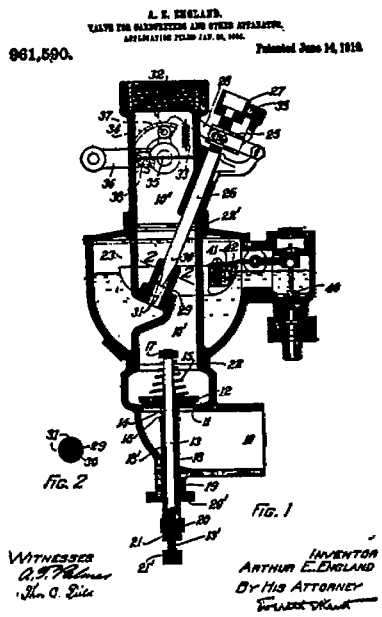
A. E. ENGLAND.
961,590.
Fig. 2
Fig. 1
Witnesses
Inventor
Arthur E. England
By His Attorney

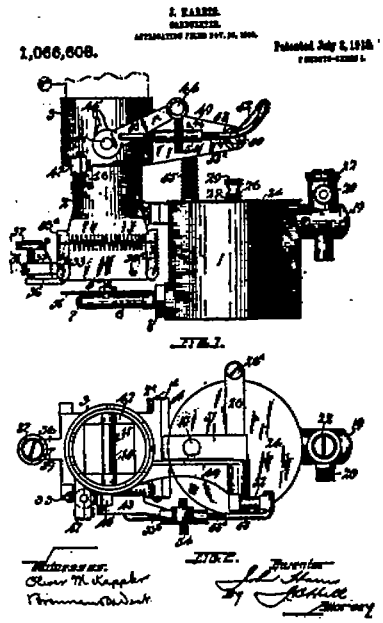
J. HARRIS.
1,066,608.
Fig. 3.
Fig. 2.
Witnesses.
Inventor
By
Attorney

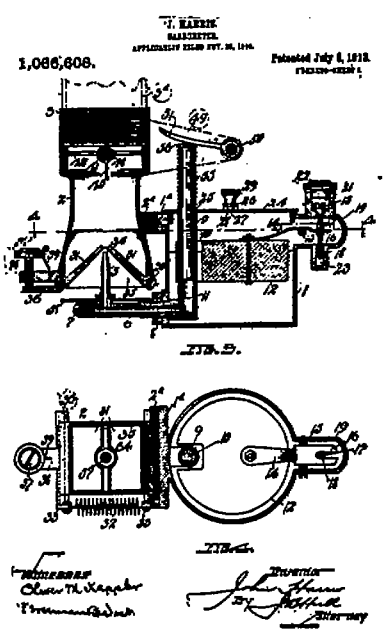
J. HARRIS.
1,066,608.
Fig. 5.
Fig. 4.
Witnesses
Inventor
By
Attorney

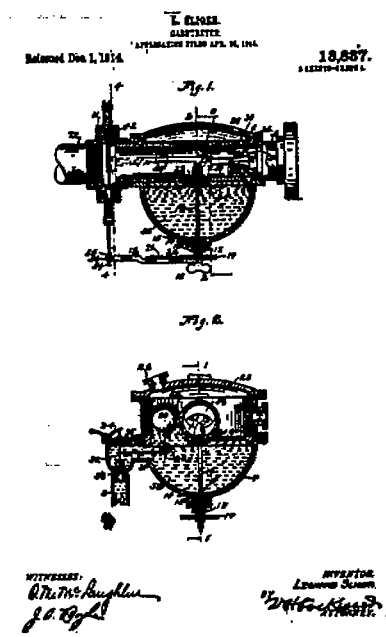
E. SLOGER.
13,557.
Fig. 1.
Fig. 2.
Witnesses:
Inventor
Leonard Sloger
By
Attorney.

L. KNIGHT.
GASTLETER.
APPLICATION FILED APR. 28, 1914.

Patented Dec. 1, 1914. 13,857.

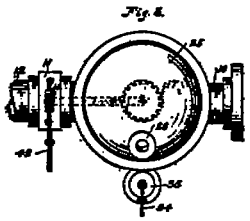

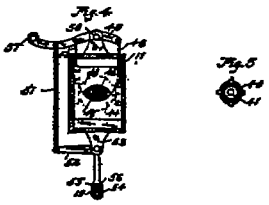

WITNESSES:
C. M. Ryglin
J. A. Ryglin

INVENTOR.
LYMAN SLATER,
BY
ATTORNEYS.

T. B. EIKER.
GASTLETER.
APPLICATION FILED FEB. 2, 1915.

1,132,314. Patented Mar. 16, 1915.

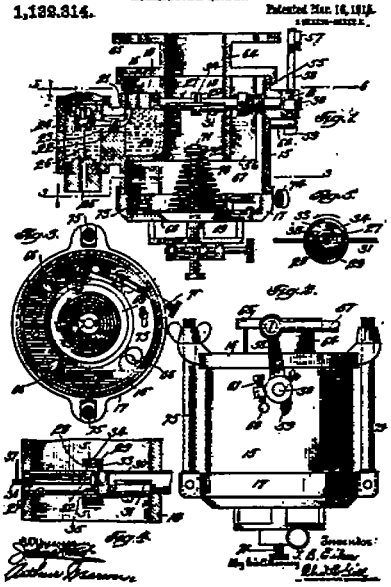

T. B. EIKER.
GASTLETER.
APPLICATION FILED FEB. 2, 1915.

1,132,314. Patented Mar. 16, 1915.

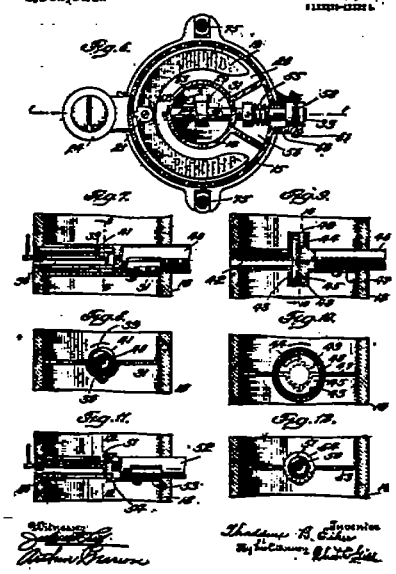

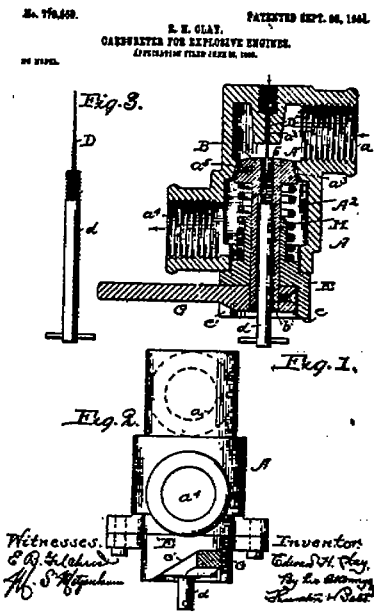
E. H. CLAY.
CARBURETER FOR EXPLOSIVE ENGINES.
Fig. 3.
Fig. 1.
Fig. 2.
Witnesses.
Inventor.

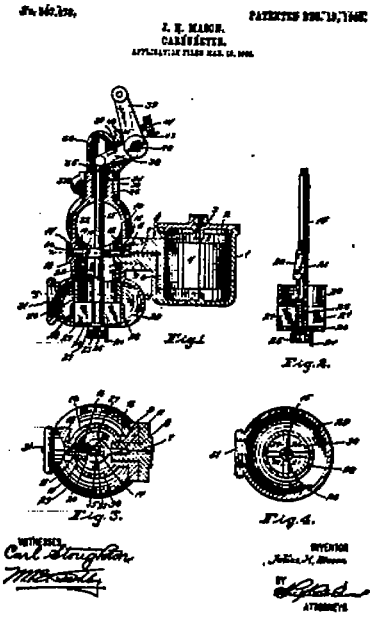
J. H. MARCH.
CARBURETER.
Fig. 1
Fig. 2.
Fig. 3.
Fig. 4.
WITNESSES
INVENTOR
ATTORNEYS

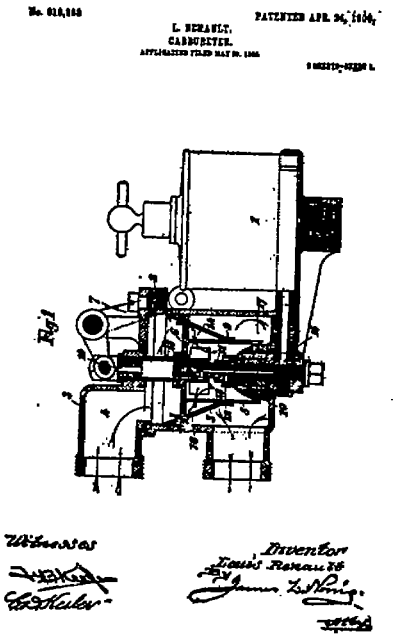
L. RENAULT.
CARBURETER.
Fig 1
Witnesses
Inventor
Louis Renault

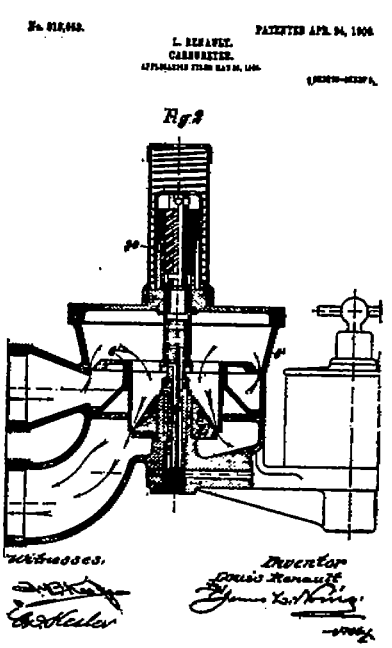
L. RENAULT.
CARBURETER.
Fig 2
Witnesses.
Inventor
Louis Renault

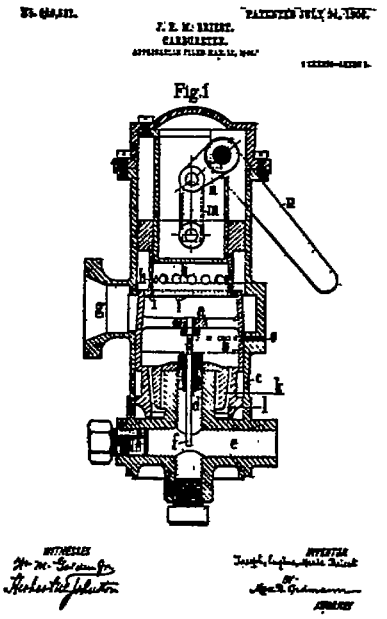
PATENTED JULY 24, 1906.
J. E. M. BRIERT.
CARBURETER.
Fig.1
WITNESSES
INVENTOR
ATTORNEY

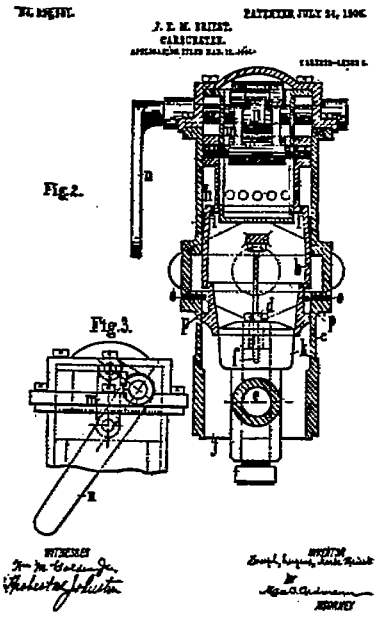
PATENTED JULY 24, 1906.
J. E. M. BRIERT.
CARBURETER.
Fig.2.
Fig.3.
WITNESSES
INVENTOR
ATTORNEY

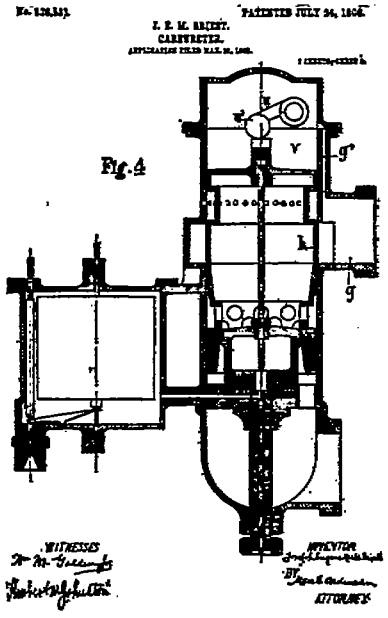
PATENTED JULY 24, 1906.
J. E. M. BRIERT.
CARBURETER.
Fig.4
WITNESSES
INVENTOR
ATTORNEY

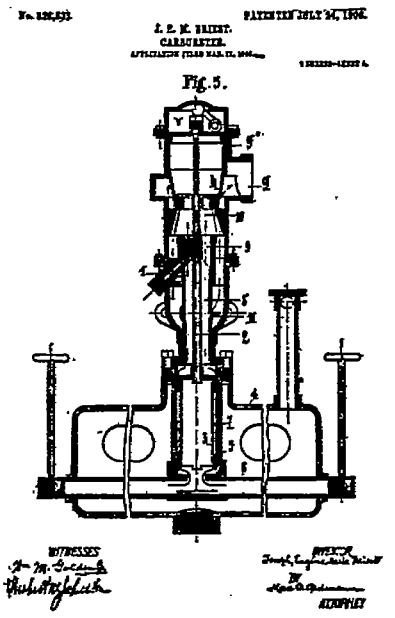
PATENTED JULY 24, 1906.
J. E. M. BRIERT.
CARBURETER.
Fig.5.
WITNESSES
INVENTOR
ATTORNEY

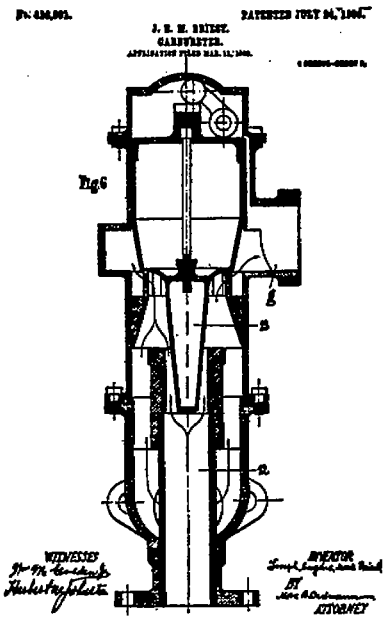
J. E. M. BRIENT.
CARBURETER.
Fig 6
WITNESSES
INVENTOR
ATTORNEY

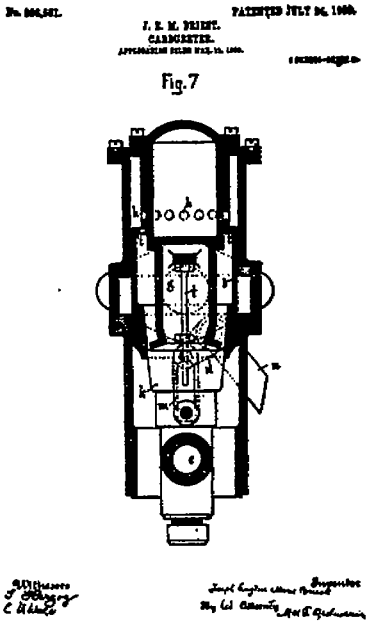
J. E. M. BRIENT.
CARBURETER.
Fig. 7

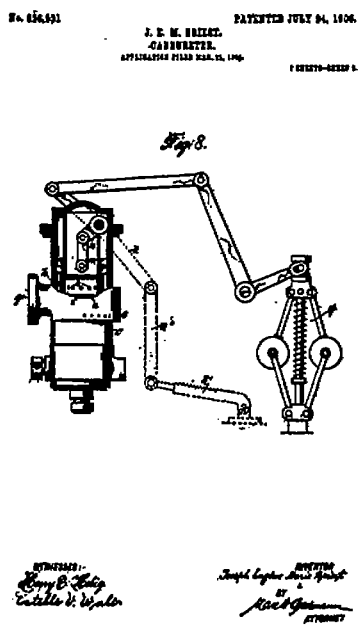
J. E. M. BRIENT.
CARBURETER.
Fig 8.
INVENTOR
ATTORNEY

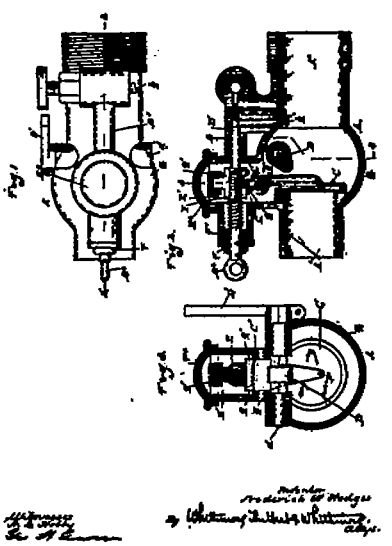
F. W. ROGERS.
CARBURETER.

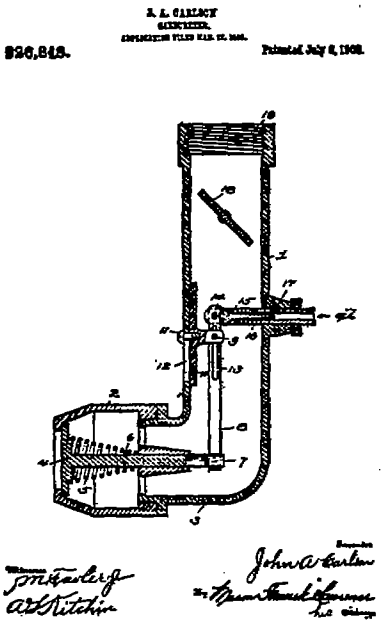
926,848.
Patented July 6, 1909.

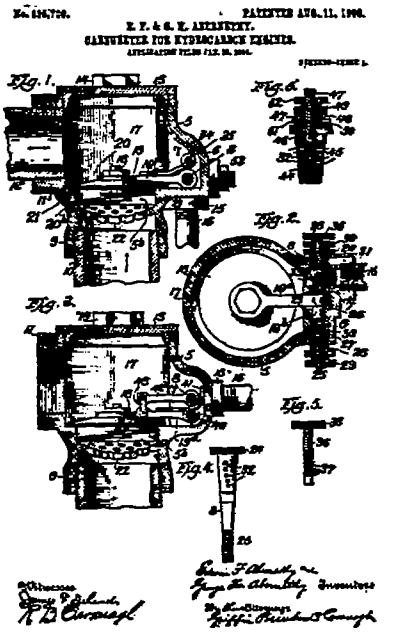
PATENTED AUG. 11, 1909.
CARBURETER FOR HYDROCARBON ENGINES.
Fig. 1.
Fig. 2.
Fig. 3.
Fig. 4.
Fig. 5.
Fig. 6.

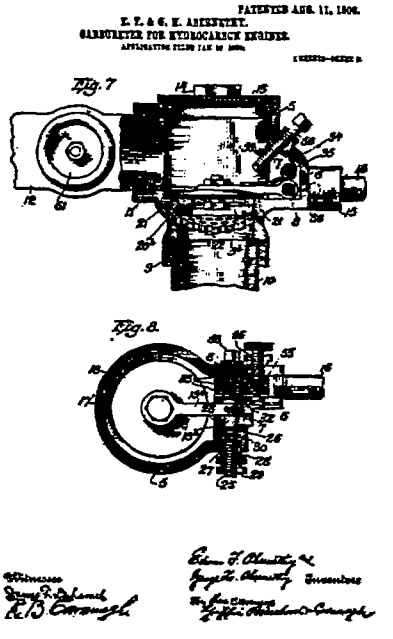
PATENTED AUG. 11, 1909.
CARBURETER FOR HYDROCARBON ENGINES.
Fig. 7
Fig. 8.

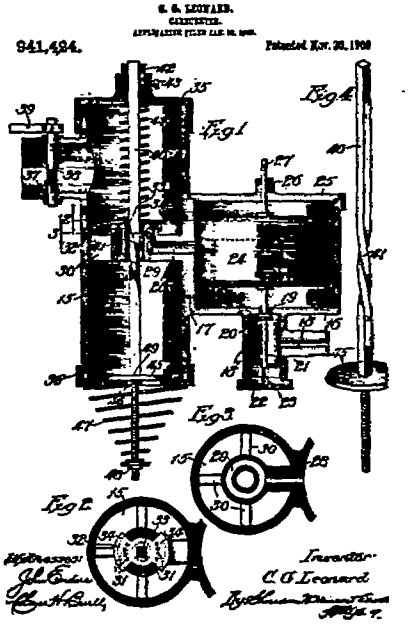
Patented Nov. 30, 1909
941,424.
Fig. 1
Fig. 2
Fig. 3
Fig. 4
Inventor
C. G. Leonard

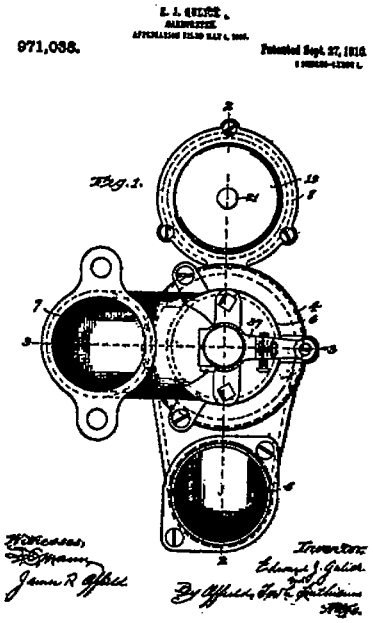
E. J. GULICK.
971,038.
Patented Sept. 27, 1910.
Fig. 1.
Witnesses,
James R. Offield.
Inventor,
By Offield, Towle & Lathrop
Attys.

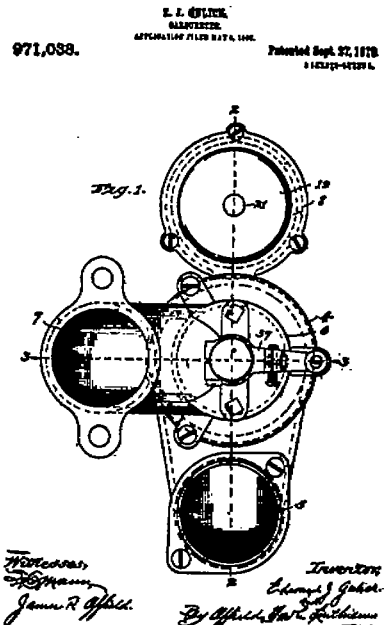
E. J. GULICK.
971,038.
Patented Sept. 27, 1910.
Fig. 1.
Witnesses,
James R. Offield.
Inventor,
By Offield, Towle & Lathrop
Attys.

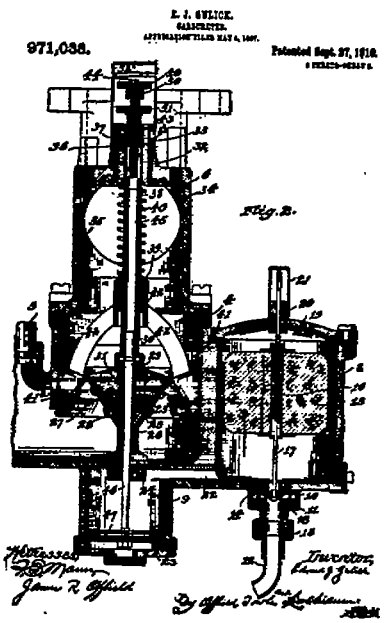
E. J. GULICK.
971,038.
Patented Sept. 27, 1910.
Fig. 2.
Witnesses,
James R. Offield.
Inventor,
By Offield, Towle & Lathrop
Attys.

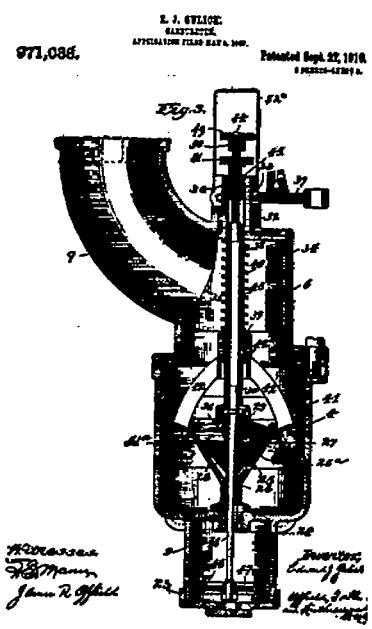
E. J. GULICK.
971,038.
Patented Sept. 27, 1910.
Fig. 3.
Witnesses,
James R. Offield.
Inventor,
Attys.

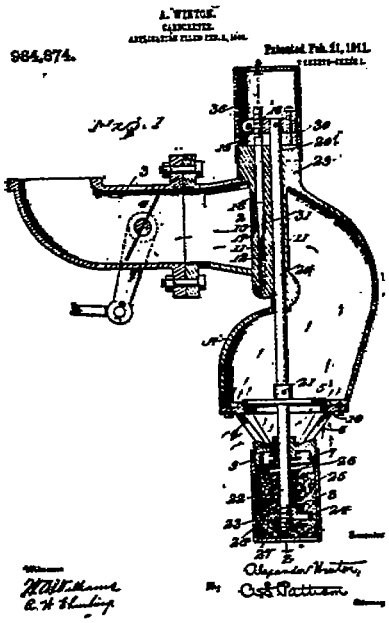
A. WINTÖR.
984,874.
Patented Feb. 21, 1911.
Fig. 1
Alexander Winter,
By Attorney

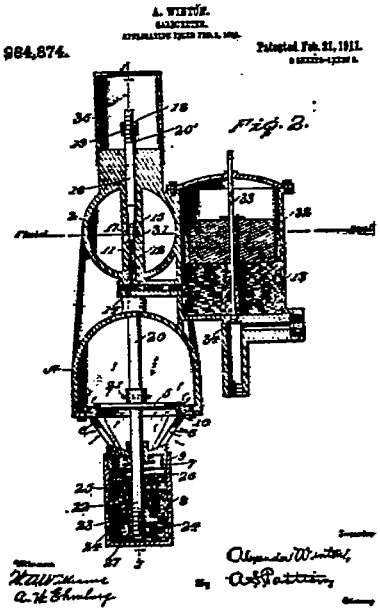
A. WINTÖR.
984,874.
Patented Feb. 21, 1911.
Fig. 2.
Alexander Winter,
By Attorney

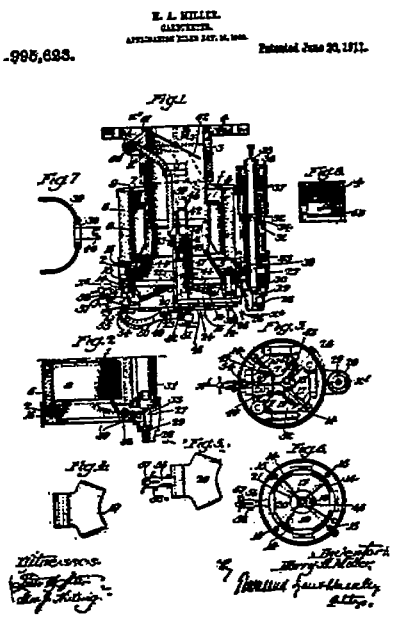
E. J. MILLER.
995,623.
Patented June 20, 1911.
Fig. 1
Fig. 7
Fig. 2
Fig. 3
Fig. 4
Fig. 5
Fig. 6
Witnesses:
Inventor:
Attorneys.

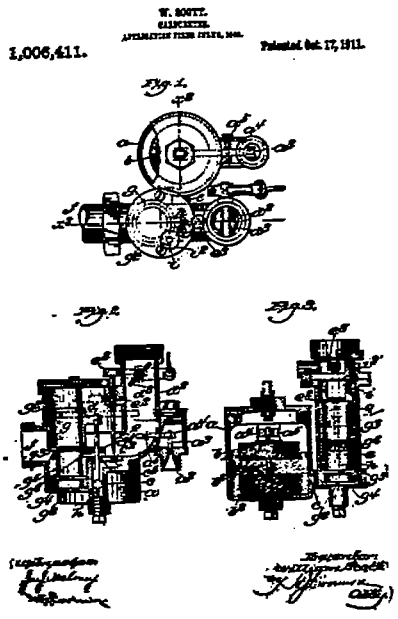
W. SOTT.
1,006,411.
Patented Oct. 17, 1911.
Fig. 1.
Fig. 2.
Fig. 3.

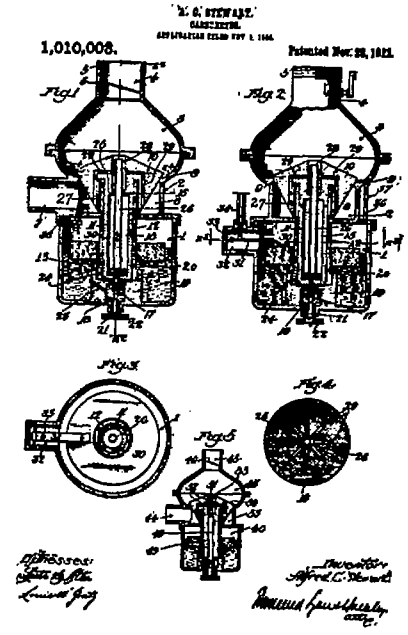
A. G. STEWART.
CARBURETOR.
1,010,008.
Fig. 1
Fig. 2
Fig. 3
Fig. 4
Fig. 5
Witnesses:
Inventor:
Alfred C. Stewart

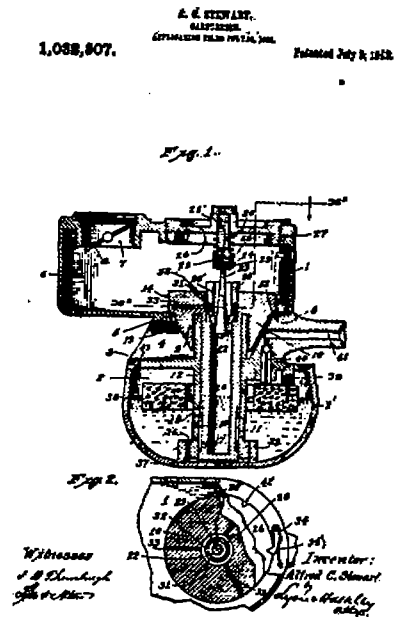
A. G. STEWART.
CARBURETOR.
1,032,807.
Fig. 1.
Fig. 2.
Witnesses
Inventor:
Alfred C. Stewart

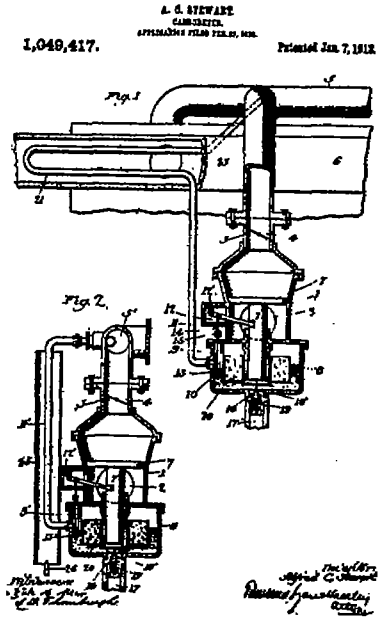
A. G. STEWART.
CARBURETOR.
1,049,417.
Patented Jan. 7, 1913.
Fig. 1
Fig. 2.
Witnesses
Inventor

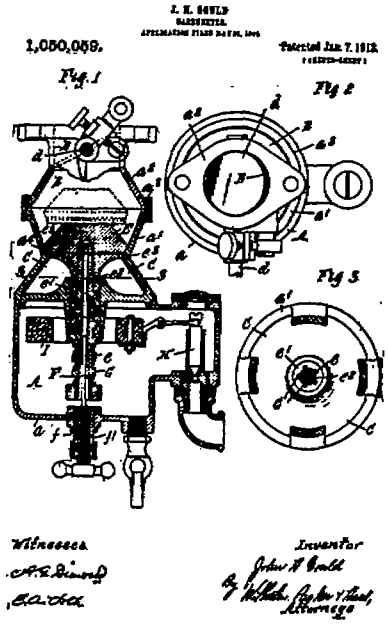
J. H. GOULD
CARBURETOR.
1,050,059.
Patented Jan. 7, 1913.
Fig. 1
Fig. 2
Fig. 3
Witnesses
Inventor
Attorneys

J. H. GOLD.
CARBURETER.
APPLICATION FILED FEB. 16, 1909.

1,050,059. Patented Jan. 7, 1913.
2 SHEETS—SHEET 2.

Fig. 4.

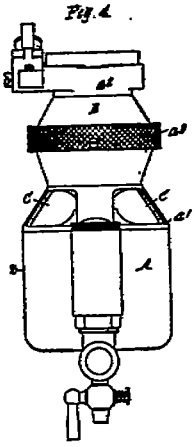

Fig. 5.

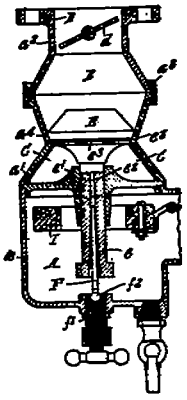

Witnesses
C. F. Simon
E. A. Dick

Inventor
John H. Gold,
by Wilkinson, Parker & Hood,
Attorneys

M. R. LAWRENCE.
CARBURETER FOR INTERNAL COMBUSTION ENGINES.
APPLICATION FILED APR. 24, 1913.

1,068,931. Patented Feb. 24, 1914.

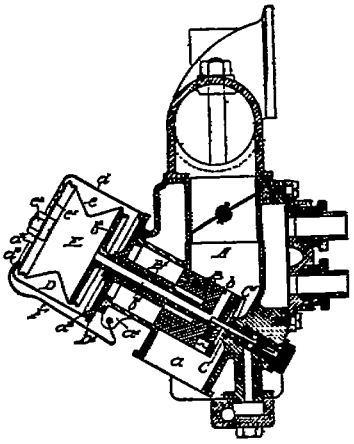

Witnesses:
Edmund L. Brown
Lyman L. Cline.

Inventor:
Maximilian Robert Lawrence
By Edmund Cooper Brown
Attorney

W. R. MARTIN
CARBURETER.
APPLICATION FILED APR. 19, 1913.

1,115,951. Patented Nov. 3, 1914.
2 SHEETS—SHEET 1.

Fig. 1.

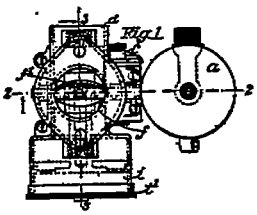

Fig. 2.

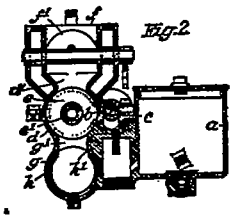

Witnesses
Elise Swenson
Ray T. West

Inventor
William R. Martin
by Fred D. Rodgers
Attorney

W. R. MARTIN.
CARBURETER.
APPLICATION FILED APR. 19, 1913.

1,115,951. Patented Nov. 3, 1914.
2 SHEETS—SHEET 2.

Fig. 3.

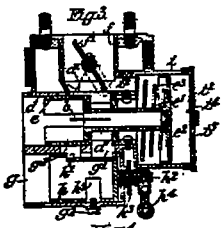

Fig. 4.

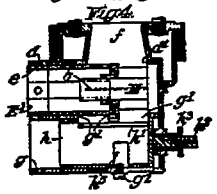

Witnesses
Elise Swenson
Ray T. West

Inventor
William R. Martin
by Fred D. Rodgers
Attorney

A. B. BROWN.
CARBURETER.
APPLICATION FILED JAN. 16, 1914.

1,120,128. Patented Dec. 8, 1914.

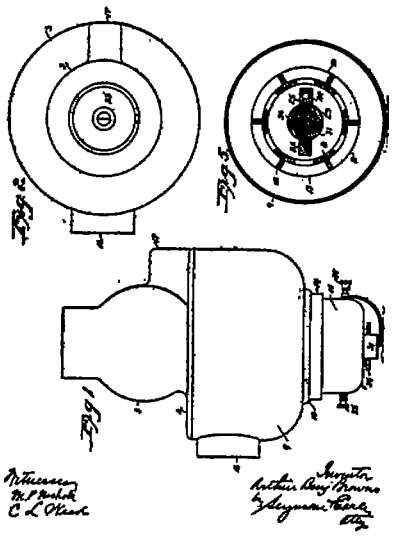

Witnesses
M. F. Peabody
C. L. Ward

Inventor
Arthur Bay Brown
by Seymour Thurber
Atty.

A. B. BROWN.
CARBURETER.
APPLICATION FILED JAN. 16, 1914.

1,120,128. Patented Dec. 8, 1914.

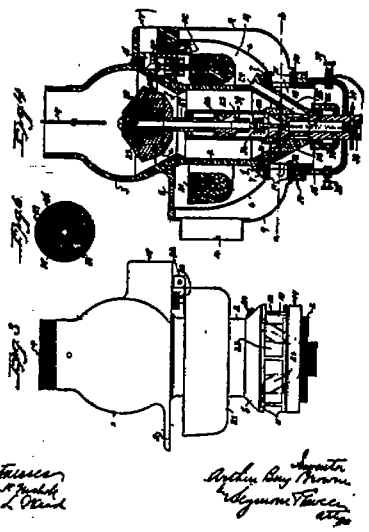

Witnesses
M. F. Peabody
C. L. Ward

Inventor
Arthur Bay Brown
by Seymour Thurber
Atty.

W. F. WARNER.
CARBURETER.
APPLICATION FILED NOV. 14, 1911.

1,123,046. Patented Dec. 29, 1914.

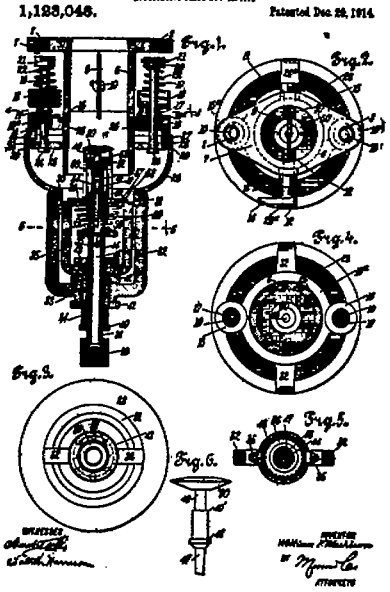

E. J. THOMPSON.
CARBURETER.
APPLICATION FILED FEB. 20, 1913.

1,130,350. Patented Mar. 2, 1915.

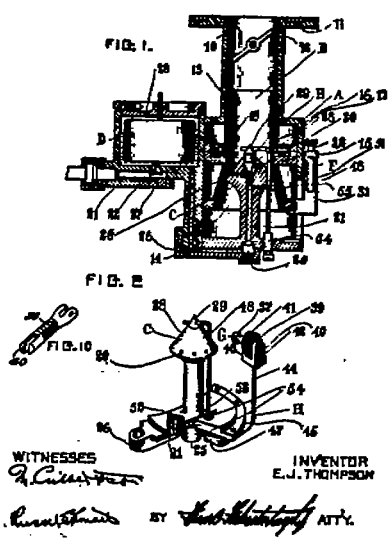

WITNESSES
INVENTOR
E. J. THOMPSON
BY
ATT'Y.

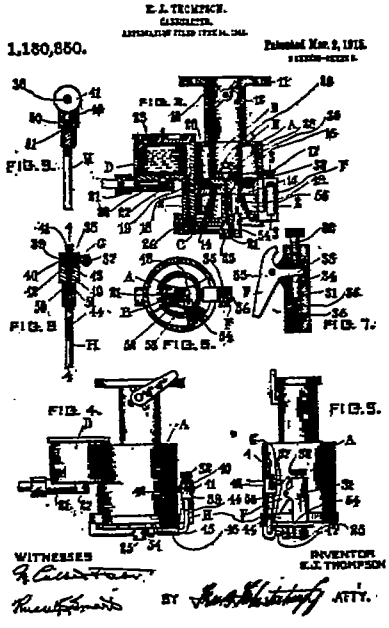
1,180,850.
FIG. 1.
FIG. 2.
FIG. 3.
FIG. 4.
FIG. 5.
FIG. 6.
FIG. 7.
WITNESSES
INVENTOR
E. J. THOMPSON
BY
ATTY.

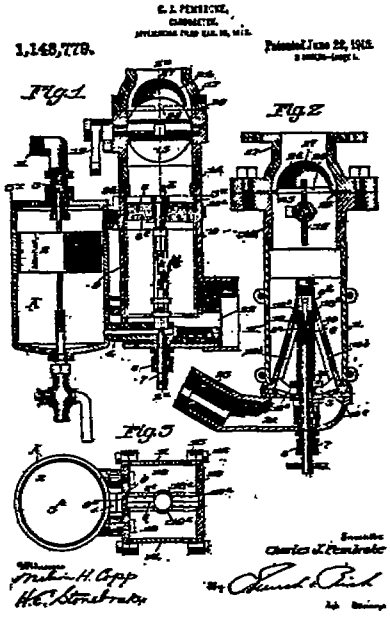
1,148,779.
Fig. 1
Fig. 2
Fig. 3

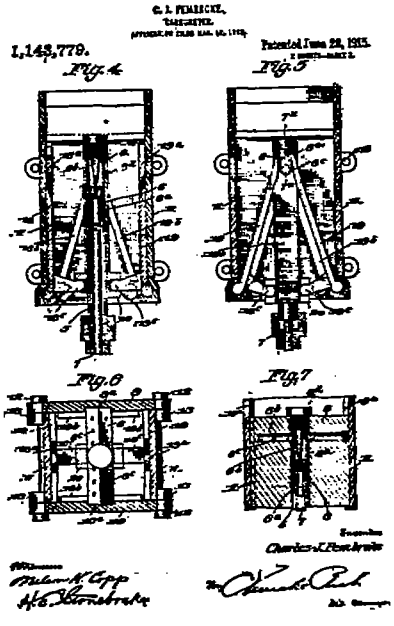
1,148,779.
Fig. 4
Fig. 5
Fig. 6
Fig. 7

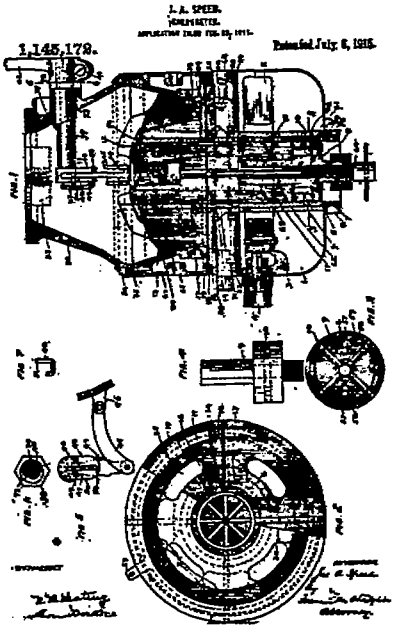
1,145,178.

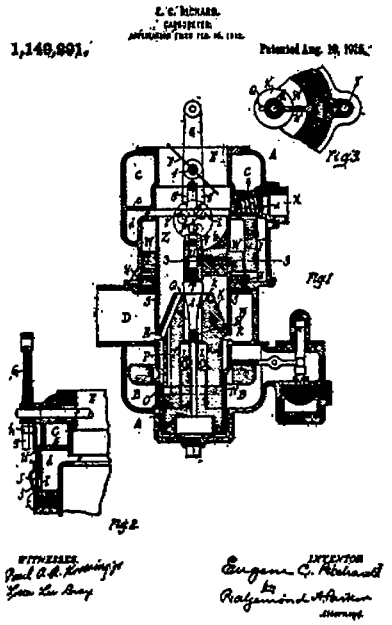
1,149,991.
Patented Aug. 10, 1915.
Fig. 3
Fig. 1
Fig. 2
Witnesses
Inventor

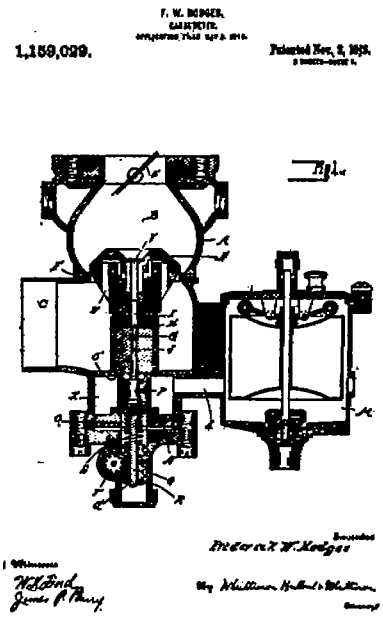
1,159,029.
Patented Nov. 2, 1915.
Fig. 1.
Witnesses

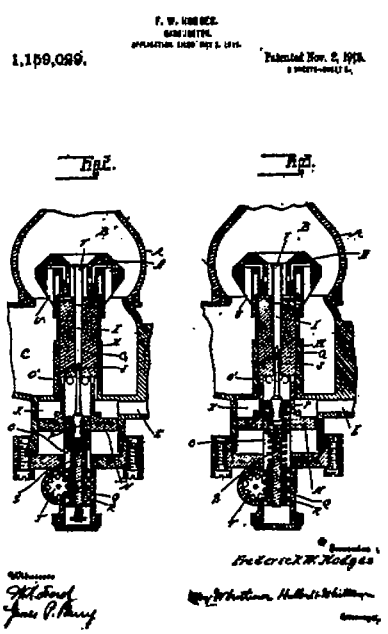
1,159,029.
Patented Nov. 2, 1915.
Fig. 2.
Witnesses

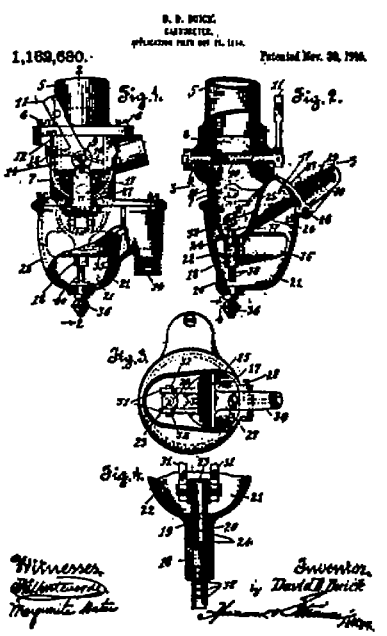
1,162,680.
Patented Nov. 30, 1915.
Fig. 1.
Fig. 2.
Fig. 3.
Fig. 4.
Witnesses
Inventor

1,179,397.

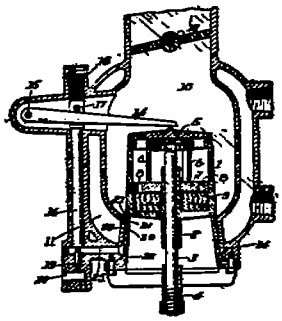

1,179,568.

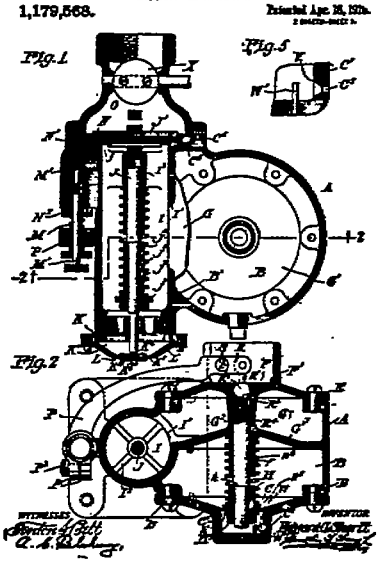

1,179,568.

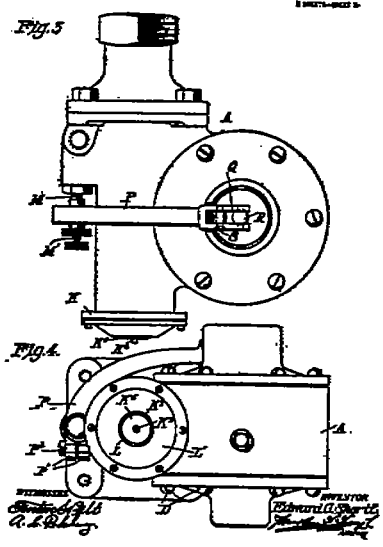

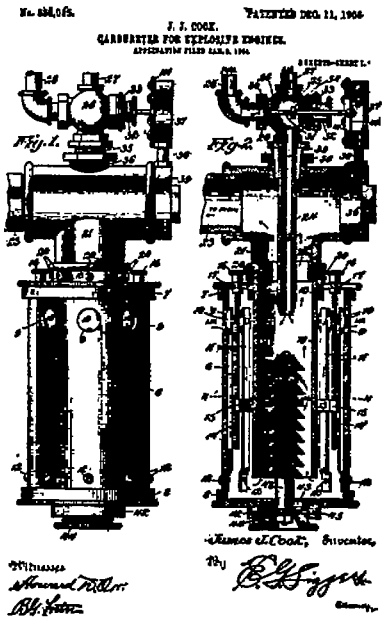
J. J. COOK.
CARBURETER FOR EXPLOSIVE ENGINES.
Fig. 1.
Fig. 2.
James J. Cook, Inventor.

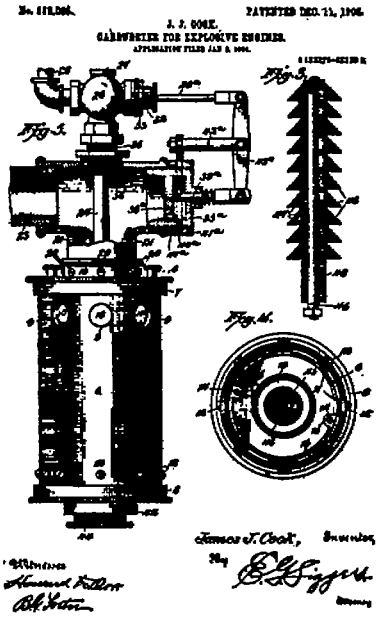
J. J. COOK.
CARBURETER FOR EXPLOSIVE ENGINES.
Fig. 3.
Fig. 4.
Fig. 5.
James J. Cook, Inventor.

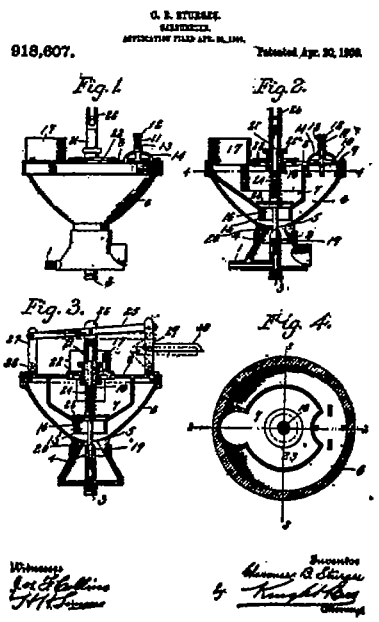
G. R. STURAY.
GASIFIER.
918,607.
Patented Apr. 20, 1909.
Fig. 1.
Fig. 2.
Fig. 3.
Fig. 4.

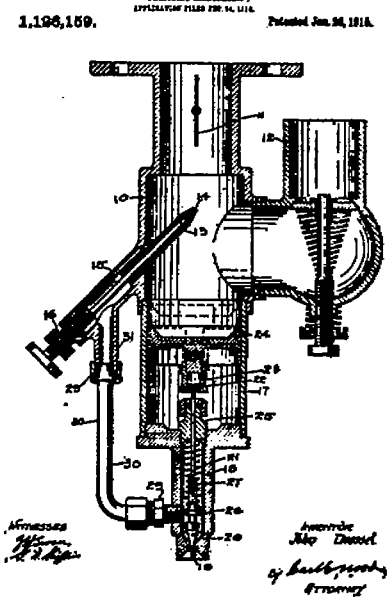
1,126,159.
Patented Jan. 26, 1915.
Inventor
Rudolf Diesel

E. G. NEWCOMB.
GASOLENE.
APPLICATION FILED SEP. 16, 1910.

1,010,066. Patented Nov. 28, 1911.
2 SHEETS—SHEET 1.

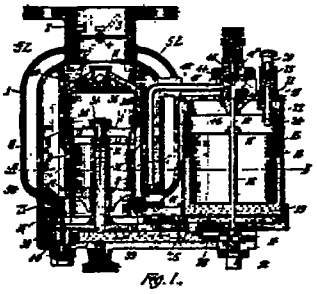

Fig. 1.

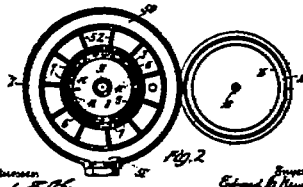

Fig. 2

Witnesses
Frank E. Ober
R. Raymond Murphy

Inventor
Edward G. Newcomb
By his Attorney
J. H. Freeman

E. G. NEWCOMB.
GASOLENE.
APPLICATION FILED SEP. 16, 1910.

1,010,066. Patented Nov. 28, 1911.
2 SHEETS—SHEET 2.

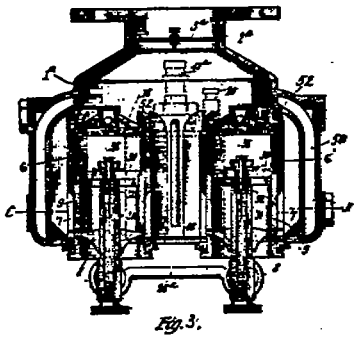

Fig. 3.

Witnesses
Frank E. Ober
R. Raymond Murphy

Inventor
Edward G. Newcomb
By his Attorney
J. H. Freeman

E. G. NEWCOMB.
GASOLENE.
APPLICATION FILED SEP. 16, 1910.

1,010,066. Patented Nov. 28, 1911.
2 SHEETS—SHEET 2.

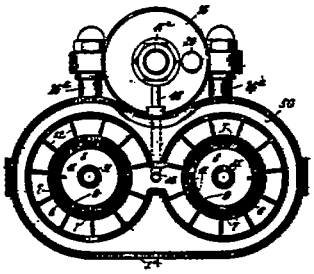

Fig. 4.

Witnesses
Frank E. Ober
R. Raymond Murphy

Inventor
Edward G. Newcomb
By his Attorney
J. H. Freeman

J. M. LOFTHOUSE & E. E. BOOTY.
GASOLENE.
APPLICATION FILED APR. 10, 1911.

1,025,816. Patented May 7, 1912.

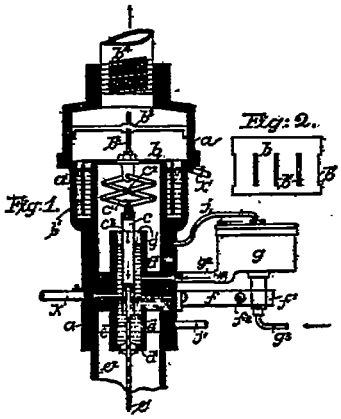

Fig. 1.

Fig. 2.

Witnesses
[illegible]

Inventors
Jacob M. Lofthouse
Emily E. Booty
By
[illegible]
Attorney.

Subclass 12.6—Valved fuel inlet between air inlet valve and throttle, fuel valve controlled independently by vacuum or air flow.—On page 402 (838,085, Dec. 11, 1906, Cook) the fuel valve is operated by a diaphragm, while the air enters a series of spring check valves. The flow itself lifts the flow disk and controls the lift of the metering pin, on page 402 (918,607, Apr. 20, 1909, Sturges), air entering through a fixed primary and an automatic secondary passage. Action of the vacuum on a piston moves the fuel valve on page 402 (1,126,159, Jan. 26, 1915, Dressel), the fuel entering the air through a nozzle in the path of the stream from an automatic air valve.

Subclass 12.7, variable float chamber pressure.—The combination of a gravity loaded automatic air valve actuating a long fuel metering pin, with control of float chamber pressure by an adjustable air flow through it to the mixing chamber, is illustrated on page 403. (1,010,066, Nov. 28, 1911, Newcomb.) On page 403 (1,025,816, May 7, 1912, Lofthouse & Booty) there is shown an air inlet of gas holder form with a mercury seal, the side walls having slots. Associated with it to move simultaneously in the opposite direction is a fuel tube sealed also in mercury and with fuel floating on the top. The fuel escapes by gravity through a hole at whatever depth beneath the surface may be fixed by the air bell. The fuel then rises with the air. The float chamber pressure is equalized, so the fuel flow will be purely by gravity head.

Class 13—Carburetors, proportioning flow aspirating, single fuel and multiple air inlets, both with regulating valves.—This is practically a modification of the common auxiliary air valve class by adding to it a fuel valve, the action of which is expected to connect and compensate for the deficiencies of the same combination without the fuel valve and indicates a failure to accept the fixed fuel inlet with its air-valve compensators as adequate.

Part of the air enters through an automatic valve leading to a throttle-controlled port on page 409 (813,653, Feb. 27, 1906, Law), part enters directly through one fixed inlet as primary air, and still another part through another fixed inlet as secondary air. The fuel valve is controlled by the throttle that also controls such secondary air as first enters through an automatic valve, a somewhat complex combination. Also unusual is the arrangement on pages 409 and 410 (817,903, Apr. 17, 1906, Comstock), in which the fuel valve delivering fuel to the primary air is controlled mechanically with the secondary air, the primary air carrying the fuel meets the secondary diluting air at a distance where the two pipes join on top of the engine. One of the stationary-engine schemes is illustrated on page 410 (876,519, Jan. 14, 1908, Brothers), having a fixed primary air inlet and a secondary air swing valve linked to a threaded fuel needle valve, both being under governor control. It is difficult to see how such an arrangement in the absence of a throttle could maintain any definite proportionality, because as needle and secondary air valves close, the vacuum on the primary air inlet must increase and its flow as well.

A fixed primary air inlet and automatic secondary are associated with a fuel valve that lifts directly with the vacuum acting on a piston at its top on page 412. (1,132,934, Mar. 23, 1915, Heitger.) Another power-driven-fan case, this time falling in the class of single variable fuel and multiple variable air inlets, is shown on page 410. (1,154,530, Sept. 21, 1915, Merriam & York.) The fuel

needle valve, located in a fixed primary air Venturi throat, is regulated by the speed of a fly-ball governor, which also adjusts simultaneously the secondary air. The mixture enters the fan casing at its center and is discharged at a pressure in excess of atmosphere, but proportionality will evidently vary with the engine inlet header pressure, which is the fan back pressure whenever flow changes without a speed change. The torque produced by the air striking the curved vanes of what would be an air turbine, were it free to rotate, causes it to turn slightly on its screw-threaded stem, thereby controlling a fuel valve, on page 412. (1,158,324, Oct. 26, 1915, Smith.) An automatic secondary air valve is provided.

A fixed primary with an automatic secondary air inlet combination has a fuel valve that opens by turning in its threaded casing, the turning being caused by the rise of a flow disk in the mixture path, which rotates as it rises because of a helical rib engaging a notch on its edge, the fuel valve stem being square is turned thereby. This is shown on page 412. (1,178,064, Apr. 4, 1916. Fahrney.)

Subclass 13.1—valved fuel inlet, fixed primary air, fixed or primary secondary air inlets, throttle control of fuel inlet valve.—Fixed primary air passes upward around the regulating fuel valve and meets secondary air entering through a tapered slot in the side of the cylindrical sleeve throttle is on page 411. (886,265, Apr. 28, 1908, Speed.) A yoke from the throttle stem actuates a sliding cam and roller gear for moving the fuel valve. Rotation of a barrel sleeve throttle surrounding the fuel inlet and a cross tube for primary air controls the secondary air by a port opposite to the throttle port and lifts the fuel needle by an inclined cam surface rotated under a lever attached to it in the form on page 411. (950,423, Feb. 22, 1910, Anderson.) Two fuel inlets, one fixed and the other varying, are similarly located and act as one, the fixed serving only to insure the accuracy of the opening for idling, on pages 411 and 412. (976,258, Nov. 22, 1910, Gallagher.) The throttle controls fuel needle and the secondary air port. An example of a fuel needle placed at a distance from the fuel inlet nozzle is shown on page 413. (1,029,796, June 18, 1912, Dawson.) The nozzle is located in a fixed primary air inlet, and the throttle controls a pair of secondary air ports and the fuel needle valve. Location of the regulating needle valve in a tapered air throat associated with a secondary sliding air sleeve beyond it, both sleeve and needle being operated by linkage from a damper throttle is illustrated on pages 413 and 414. (1,065,462, June 24, 1913, Miller.) A comparatively recent form of the rotating barrel sleeve acting as both throttle and secondary air valves at opposite ports, and carrying a fixed primary air inlet along the axis, the fuel needle valve cam operated by the rotation, is shown on page 414. (1,125,339, Jan. 19, 1915, Keizer.) Here the primary air throat lies wholly within the barrel and is provided with a bend or side outlet shroud on top.

As an example of the effect of change of time in improving form, the same elements as were incorporated in figure 390 are again brought together in a new structure on pages 414 and 415 (1,148,485, July 27, 1915, Gallagher) about five years later. Attention is called to the substitution of a good form of tapered throat for the primary air instead of the former irregular one with no definite direction and making many eddy currents, the substitution of a damper for a longitudinal cylindrical throttle, a concentric for a side float chamber,

while retaining a linkage between the secondary air, the fuel needle and the throttle, and finally the separate low-speed fuel orifice.

Subclass 13.2—valved fuel inlet, valved primary and secondary air inlets, throttle control of both air inlets and the fuel inlet valve.—Again, the throttle is retained as the prime variable element of control, this time varying all areas with it, that of both of the air inlets and the fuel, on the old assumption that areas rather than pressures are the fundamental variables in proportionality maintenance as quantity varies, instead of giving due weight to both and using as the prime variable some unit that is a measure of flow.

On page 416 (1,134,366, Apr. 6, 1915, Barnes) a tapered throat is provided with a central tapered plug, serving as a primary air valve and sliding with the fuel needle on a fixed sleeve, and to it is connected a secondary air sleeve, and this triple-moving member acts as the throttle. The varying throat and fuel inlet relation itself acts as a compensation factor in this case. A rotating barrel sleeve acts similarly by controlling the outlets of both primary and secondary air passages, the same motion varying the fuel needle position on pages 416 and 417. (1,162,111, Nov. 30, 1915, Simpson.) The fuel inlet is here set in front of the air restriction so that it receives less vacuum than in the previous case.

Subclass 13.3—Valved fuel inlet, fixed primary, and throttle-controlled secondary air inlets, fuel valve controlled by the vacuum or air flow independently.—Making the variable air depend on the throttle and the fuel variation on the flow directly is a good example of mixed variables, because the two things that should vary together might naturally be expected to receive their motion from the same instead of different sources. Two examples only are given on page 418 (1,081,222, Dec. 9, 1913, Dürr), having again the double-ported rotating barrel to serve as secondary air and throttle valve. It is, however, screw threaded in its casing, so that it has a small axial motion with rotation. A spring-resisted piston within it carries the fuel valves and a fixed primary air passage passes through the end of the casing and through the piston rod to the central fuel opening. The fuel valve lifts an amount fixed by the spring tension and the vacuum, and thereby regulates the fuel delivered to the primary air, the amount of which is small. The old air impact flow disk is used to control the fuel in a chamber supplied with fixed primary and automatic secondary air arranged with an electric heater to operate on kerosene, as shown on page 418. (1,131,157, Mar. 9, 1915, Percival & Patterson.)

Subclass 13.4—Valved fuel inlets, fixed primary and automatic valved secondary air inlets, fuel valve controlled by the throttle.—As the use of the automatic secondary air valve in place of throttle control is a proper step, especially for the high capacity variable speed engine, it seems questionable that the throttle should be selected at the origin of fuel-valve regulation, but there are quite a number of cases of this sort.

A cam connection is provided between a damper throttle and the fuel needle on page 419 (870,052, Nov. 5, 1907, Schebler) and applied to a carburetor of the common fixed primary and automatic secondary air form. The fact that a fuel-valve adjustment is suggested at all for a carburetor of this large old class is a measure of lack of confidence in the adequacy of the compensation it affords

without the fuel valve. Another case of cam-lifted fuel valve operated from a damper throttle in conjunction with a fixed primary and automatic secondary air inlet is shown on page 419. (1,052,917, Feb. 11, 1913, Heitger.) A combination of separated fuel-inlet nozzle and regulating fuel valve, the latter operated from a damper throttle and the former associated with a fixed primary and automatic secondary air inlet, is shown on page 422. (1,096,569, May 12, 1914, Sharpneck.) The fixed primary and automatic secondary air inlets are used in combination with the rotating sleeve throttle turning a screw-threaded fuel valve in its fixed casing, on page 422. (1,106,226, Aug. 4, 1914, Lamb.) Use is made of the long taper fuel metering pin fixed to a flat block form of throttle on page 420 (1,106,802, Aug. 11, 1914, Goldberg), in connection with fixed primary and automatic secondary air inlets, but in such a way as to partially restrict the primary air passage. On page 420 (1,173,762, Feb. 29, 1916, Arquembourg), a regulating fuel valve cam operated from the shaft of a barrel throttle is combined with a fuel nozzle located in a Venturi throat, beyond which the secondary air enters through ball-type automatic valves.

Subclass 13.5—Valve fuel inlet, fixed primary and automatic valved secondary air inlets, fuel valve controlled by the automatic secondary air valve.—Assuming that the old standard fixed fuel and primary air carburetor with automatic secondary air compensation to be inadequate for the severe conditions of the variable-speed engine, and that some additional means of compensation is necessary, then it is quite a natural and logical step to make this take the form of a fuel valve adjustment controlled by the secondary air valve on the ground that up to the time the latter opens the fuel area should vary with the additional air area, or that both areas should be controlled by the vacuum. This seems to be the origin of the ideas of the cases of this subclass, one of the earliest of which is that on page 421. (855,170, May 28, 1907, Gray.) A direct connection is made between the automatic secondary air valve and the fuel valve, so both move the same amount in this case. A bell-crank linkage is provided to connect a horizontal-stem automatic air valve and a vertical-stem fuel valve on page 421. (981,853, Jan. 17, 1911, Halladay.) Location of the fuel needle on the axis of the automatic air valve, the stem guide of which is tubular and serves as the fixed primary air inlet, is illustrated on page 421. (1,010,185, Nov. 28, 1911, Schulz.) A tubular sleeve form of fuel valve, forming the stem guide of the secondary air valve, is shown on page 421. (1,022,702, Apr. 9, 1912, Rothe & Culp.) A cam connection between the automatic air valve and the fuel needle is shown on page 423 (1,078,590, Nov. 11, 1913, Muir), which also illustrates the idea of a throttle limit to the movement, so that, while it is automatic and completely so for a wide-open throttle, it is not for a partly closed throttle, and at any time closure of the throttle closes both fuel and secondary air valves. Two fuel valves operated by the automatic air valve are shown on pages 423 and 424 (1,111,224, Sept. 22, 1914, Hamilton), but so located as to act as one, so far as proportionality is concerned. Of course, two different fuels can be simultaneously used. A lever connection between the secondary air valve and the fuel valve is shown on page 424 (1,118,126, Nov. 24, 1914, Harroun), which also has electrical heating coils in the primary air tube in-

tended to adapt it to kerosene. It is of interest to compare this with the same proportionality arrangement adapted to use exhaust heat both for warming the primary air and for directly heating the primary mixtures, as shown on page 424 (1,158,494, Nov. 2, 1915, Harroun), to which an air-valve dashpot is added as well.

Use of a very much restricted primary air venturi, as illustrated on page 425 (1,156,823, Oct. 12, 1915, Schebler), hardly more than will serve to lift the fuel and to somewhat spray it. This brings this subclass very close, indeed, to that of subclass 12.5, with all its favorable functional characteristics. It is an excellent example of the way in which one class merges into another, and necessarily so, no matter what the classification basis may be.

Subclass 13.6—Valved fuel inlet, valved primary and secondary air inlets, both automatic, fuel valve controlled by one or both automatic air inlet valves.—In essential principle this subclass is the same as that of subclass 7.5, though structurally the difference is real, being that of two valves versus one. Of course, if the valves are different, especially in size and loading, then control of the fuel valve does not so directly proportion fuel to total air as with two similar valves which would be equivalent to one. If one such valve will serve the purpose, some other reason than a search for proportionality must be responsible, and one reason that certainly applies in some cases is a failure to realize the fact.

Two spring-loaded automatics, nearly similar, are used on page 426 (917,125, Apr. 6, 1909, Pierce), one of them controlling the fuel valve by a cam surface on its stem. This one is fitted with a throttle resistance, while the other is free. A pair of swing checks of different size are both connected to a bell-crank needle-valve control, and they therefore act as one on page 426. (1,022,326, Apr. 2, 1912, Namur.) Four small spring-loaded secondary air valves are added to a central automatic piston sleeve primary automatic, controlling the fuel-metering pin, on page 426. (1,084,954, Jan. 20, 1914, Nice.) A single piston and sleeve form of automatic valve controls two sets of air ports, the one above acting as secondary and a lower annual port as primary air passage. The moving member adjusts the fuel valve at the same time on page 427. (1,087,187, Feb. 17, 1914, Schulz.) The primary air is small and is a convenient means of lifting and spraying the fuel. The action is entirely equivalent functionally to the previous class referred to. As arranged on page 428 (1,105,134, July 28, 1914, Hanemann) the primary automatic air valve controlling the fuel valve is entirely different from the secondary, and the action must also be different with respect to proportionality.

On page 427 (1,125,525, Jan. 19, 1915, Hathcote, is shown a form that again illustrates how closely one class merges into another, this case being, except for the proportion of the fixed to the valve controlled air, similar to those of subclass 12.5 more especially those examples of that class that have a small fixed air passage passing the fuel inlet for idling and for lifting the fuel into the main air stream, but not enough air to be considered as removing complete air control from the automatic valve. Here the central fixed hole is too large to be ignored in this way, but it would be impossible to draw a line of division with precision.

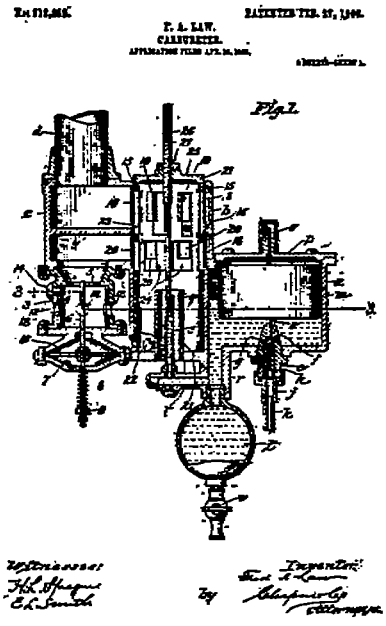
No. 712,816.
PATENTED FEB. 27, 1902.
P. A. LAW.
CARBURETER.
APPLICATION FILED APR. 16, 1900.
Fig. 1.
Witnesses:
H. L. Sprague
E. L. Smith
Inventor:
Paul A. Law
by Alexander & Co.
Attorneys.

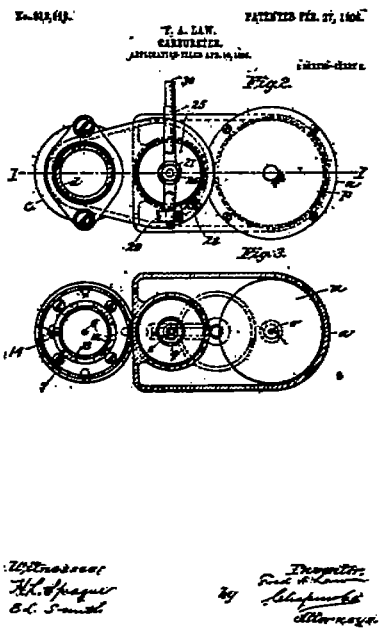
No. 712,816.
PATENTED FEB. 27, 1902.
P. A. LAW.
CARBURETER.
APPLICATION FILED APR. 16, 1900.
Fig. 2.
Fig. 3.
Witnesses:
H. L. Sprague
E. L. Smith
Inventor:
Paul A. Law
by Alexander & Co.
Attorneys.

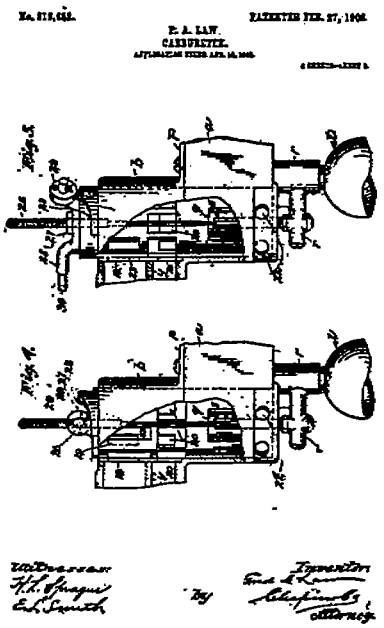
No. 712,816.
PATENTED FEB. 27, 1902.
P. A. LAW.
CARBURETER.
APPLICATION FILED APR. 16, 1900.
Fig. 5.
Fig. 6.
Witnesses:
H. L. Sprague
E. L. Smith
Inventor:
Paul A. Law
by Alexander & Co.
Attorneys.

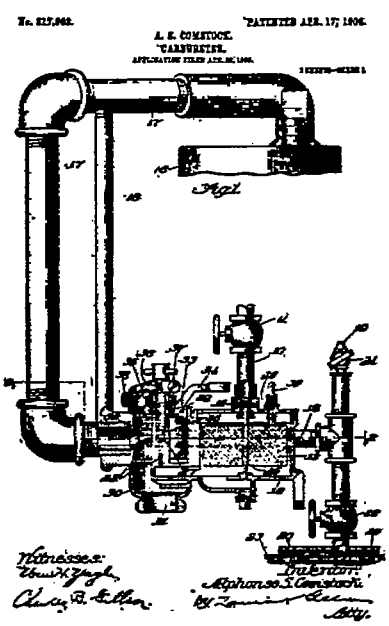
No. 717,962.
PATENTED JAN. 17, 1903.
A. E. COMSTOCK.
CARBURETER.
APPLICATION FILED APR. 30, 1900.
Fig. 1.
Witnesses:
Inventor:
Alphonso E. Comstock
by Zenas Dean
Atty.

No. 817,963. PATENTED APR. 17, 1906.

A. S. COMSTOCK.
CARBURETER.
APPLICATION FILED APR. 26, 1905.

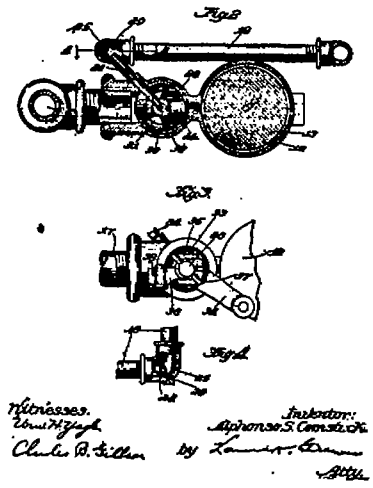

No. 876,819. PATENTED JAN. 14, 1908.

W. BROTHERS.
CHARGE FORMING DEVICE FOR INTERNAL COMBUSTION ENGINES.
APPLICATION FILED SEPT. 16, 1906.

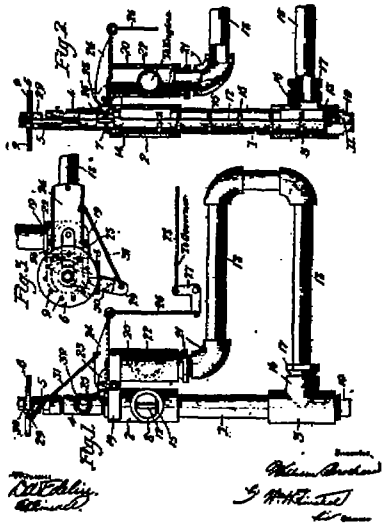

F. C. MERRIAM & L. M. YORK.
CARBURETER.
APPLICATION FILED MAR. 29, 1915.

1,154,530. Patented Sept. 21, 1915.

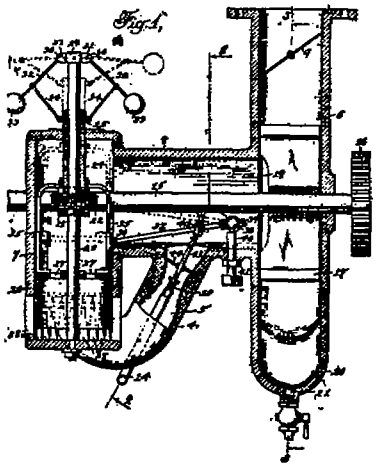

F. C. MERRIAM & L. M. YORK.
CARBURETER.
APPLICATION FILED MAR. 29, 1915.

1,154,530. Patented Sept. 21, 1915.

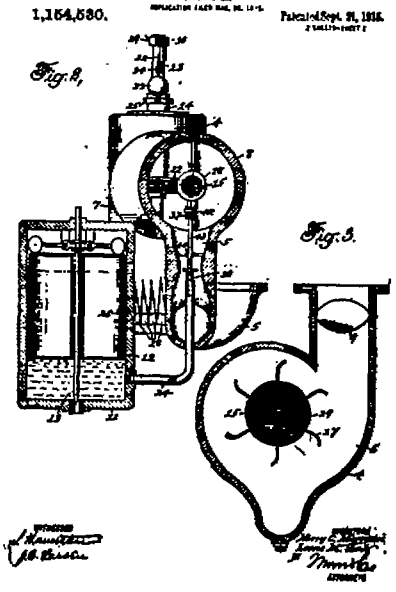

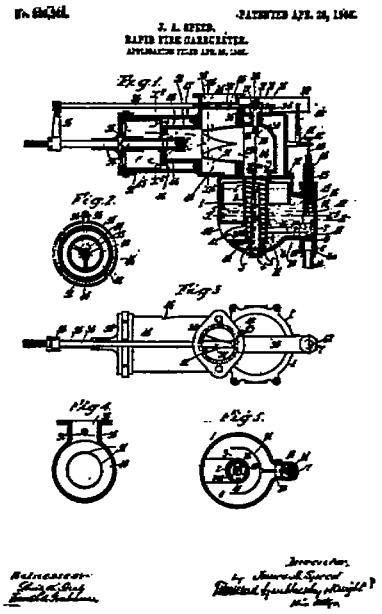
J. A. SPEER.
RAPID FIRE CARBURETER.
Fig. 1.
Fig. 2.
Fig. 3
Fig. 4.
Fig. 5.

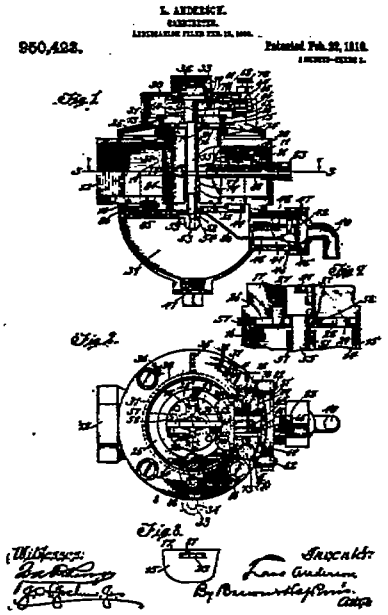
L. ANDERSON.
CARBURETER.
950,423.
Patented Feb. 22, 1910.
Fig. 1
Fig. 2.
Fig. 3.

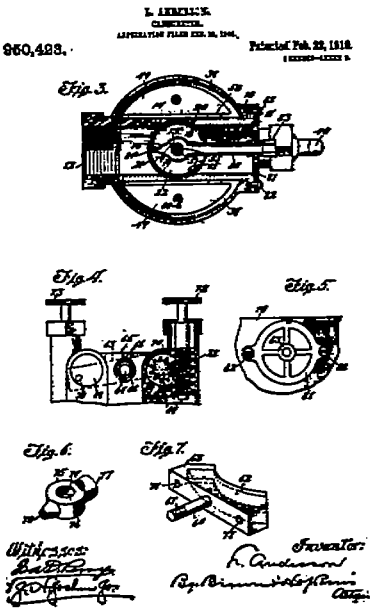
L. ANDERSON.
CARBURETER.
950,423.
Patented Feb. 22, 1910.
Fig. 3.
Fig. 4.
Fig. 5.
Fig. 6.
Fig. 7.

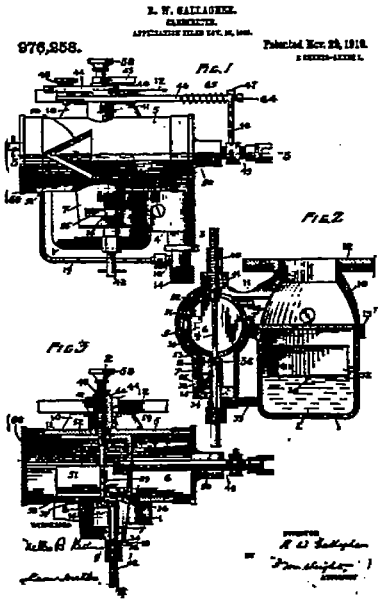
L. W. GALLAGHER.
CARBURETER.
976,258.
Patented Nov. 29, 1910.
FIG. 1
FIG. 2
FIG. 3

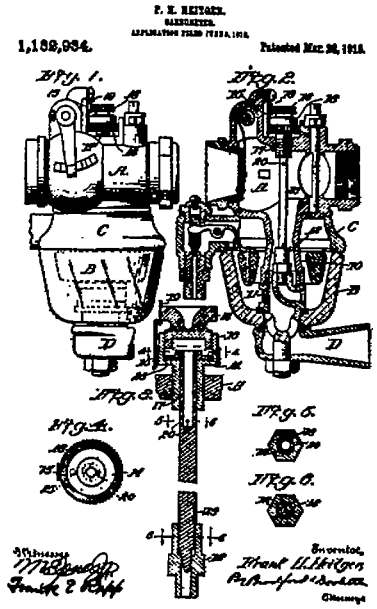

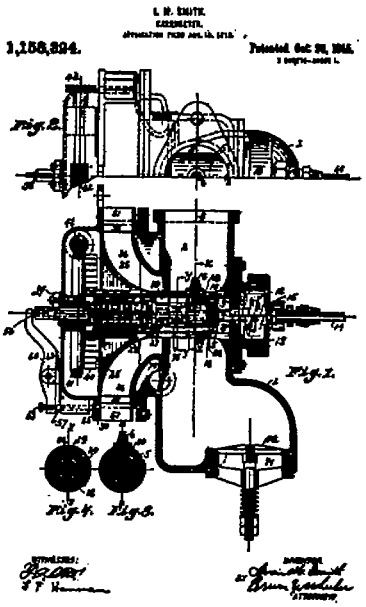

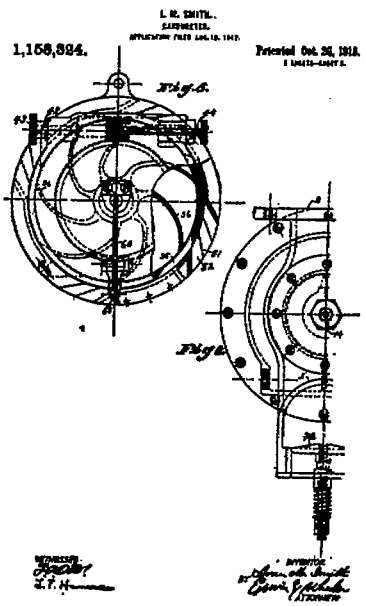

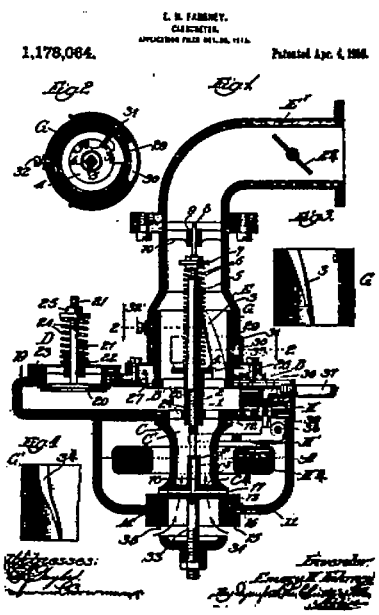

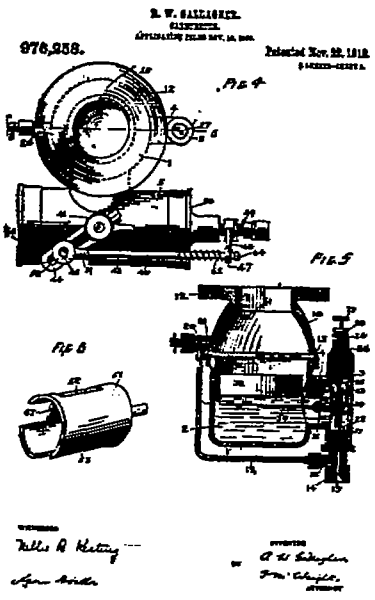
976,258.
Patented Nov. 22, 1910.
Fig 4
Fig 5
Fig 6

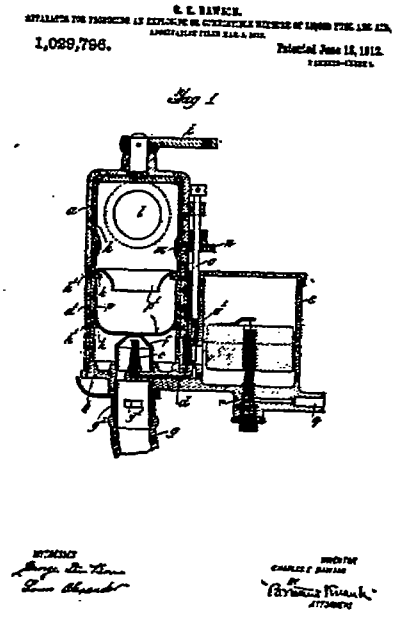
1,029,796.
Patented June 18, 1912.
Fig 1

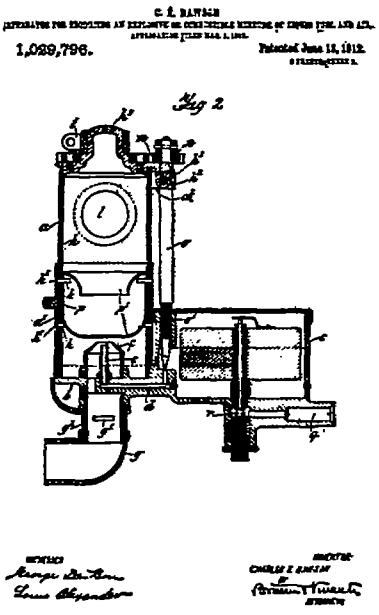
1,029,796.
Patented June 18, 1912.
Fig 2

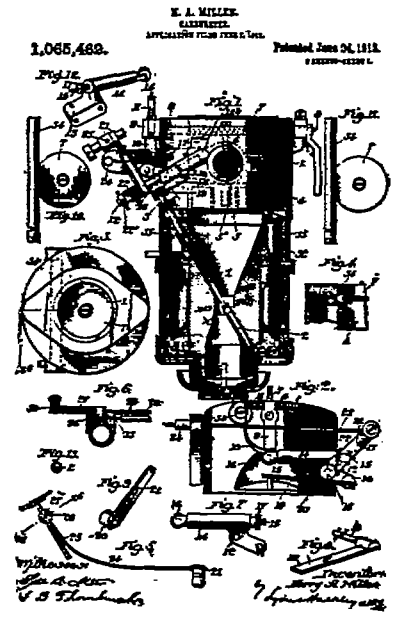
1,065,462.
Patented June 24, 1913.

1,065,468.

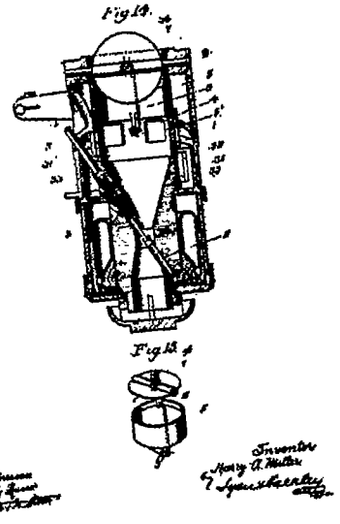

1,195,639.

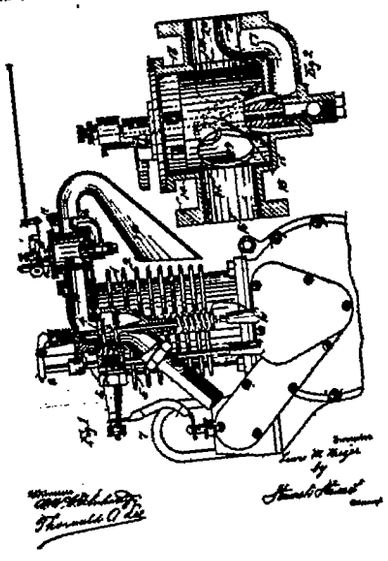

1,195,889.

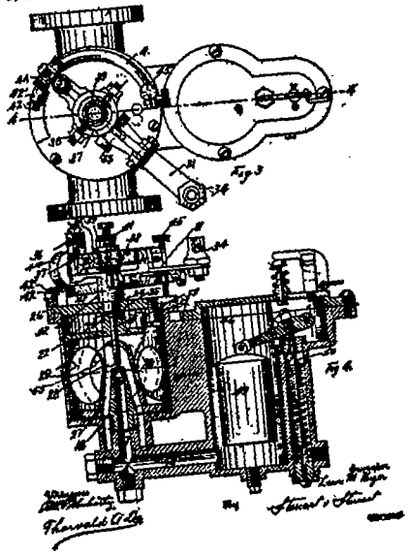

1,148,485.

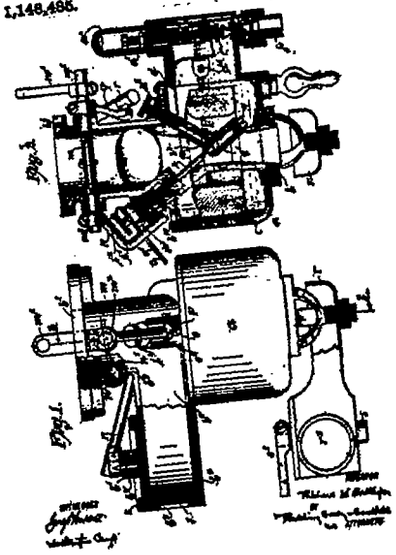

R. W. GALLAGHER.
CARBURETER.
APPLICATION FILED AUG. 1, 1912.

1,148,485. Patented July 27, 1915.
2 SHEETS—SHEET 2.

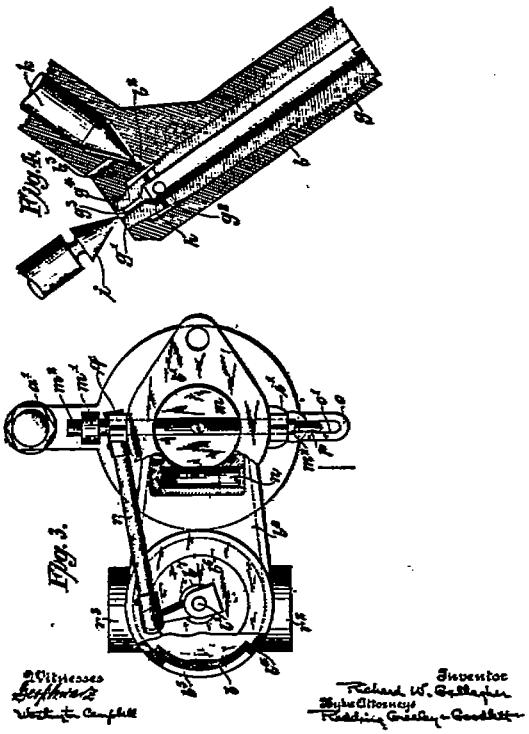

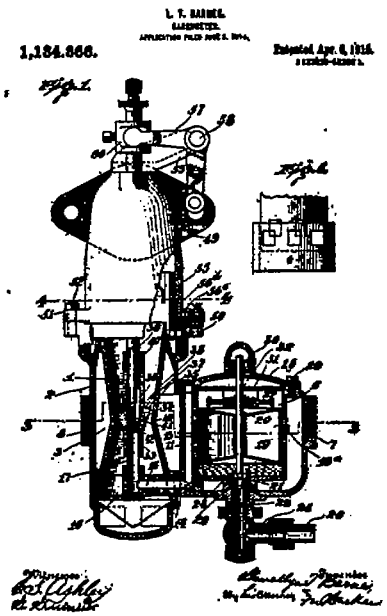
1,134,866.
Patented Apr. 6, 1915.

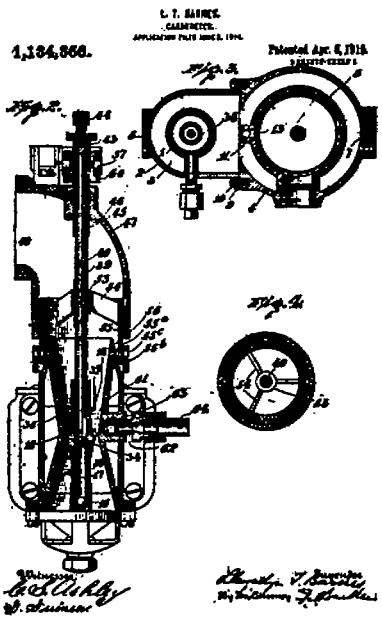
1,134,866.
Patented Apr. 6, 1915.

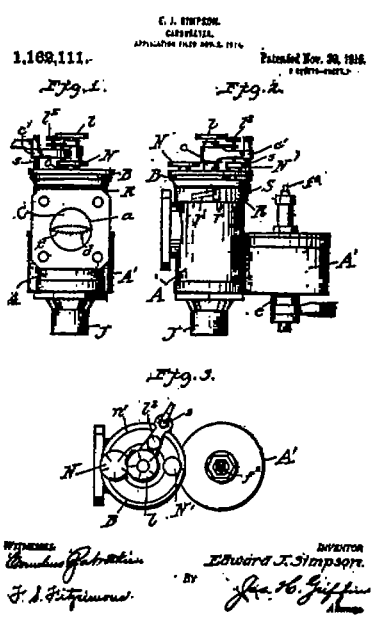
1,169,111.
Patented Nov. 30, 1915.
Fig. 1.
Fig. 2.
Fig. 3.
Witnesses
Edward J. Simpson.
Inventor
By
Jas. H. Griffin
Attorney

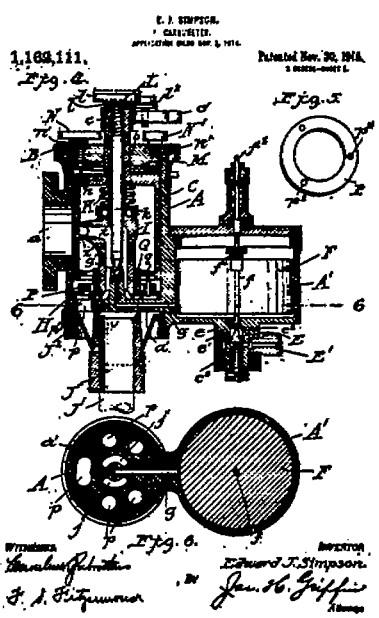
1,169,111.
Patented Nov. 30, 1915.
Fig. 4.
Fig. 5
Fig. 6.
Witnesses
Edward J. Simpson.
Inventor
By
Jas. H. Griffin
Attorney

E. J. SIMPSON.
CARBURETER.
APPLICATION FILED NOV. 2, 1914.

1,162,111. Patented Nov. 30, 1915.
2 SHEETS—SHEET 2.

Fig. 7.

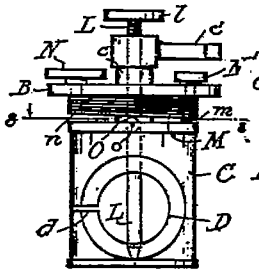

Fig. 8.

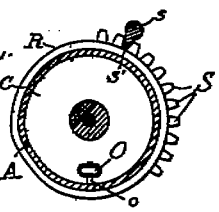

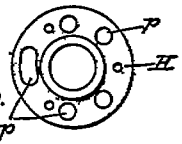

Fig. 9.

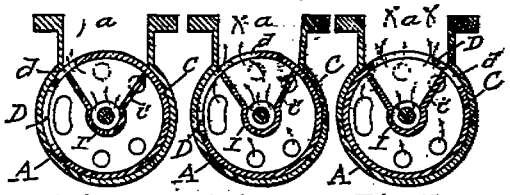

Fig. 10. Fig. 11. Fig. 12.

WITNESSES:
Cornelius Gabrielsen
H. A. Fitzgerald

INVENTOR
Edward J. Simpson
BY
Jas. H. Griffiths
Attorney

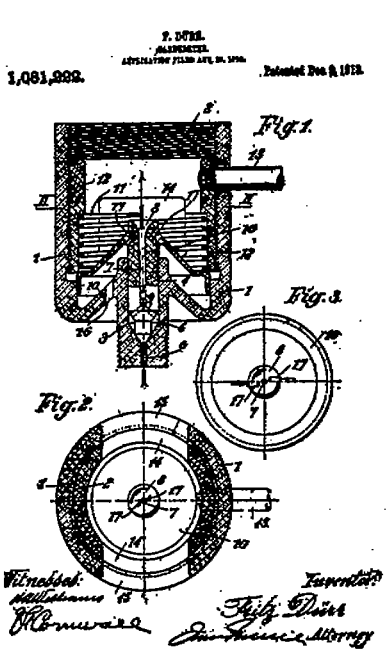
F. DÜRR.
1,081,222.
Patented Dec. 9, 1913.
Fig. 1.
Fig. 2.
Fig. 3.
Witnesses:
Inventor:
Attorney

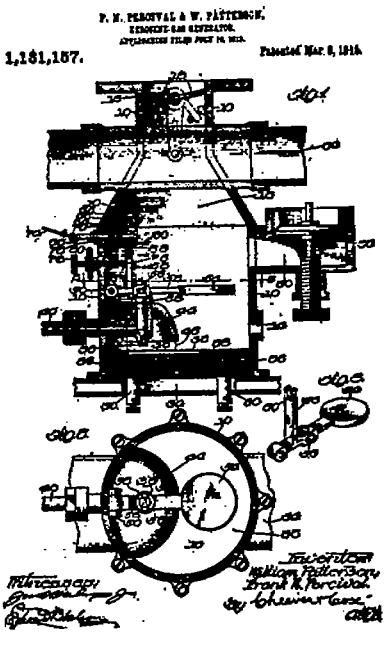
P. H. PERCIVAL & W. PATTERSON.
1,181,157.
Patented Mar. 8, 1916.
Witnesses:
Inventors:

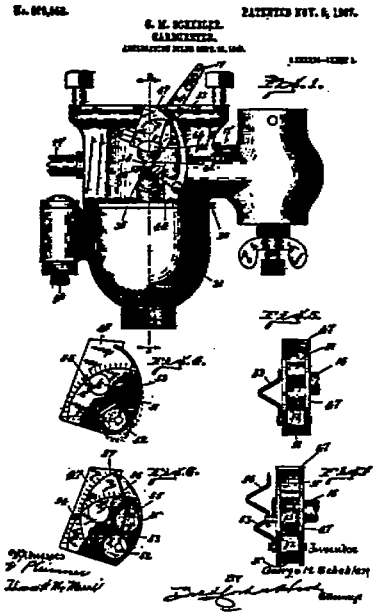

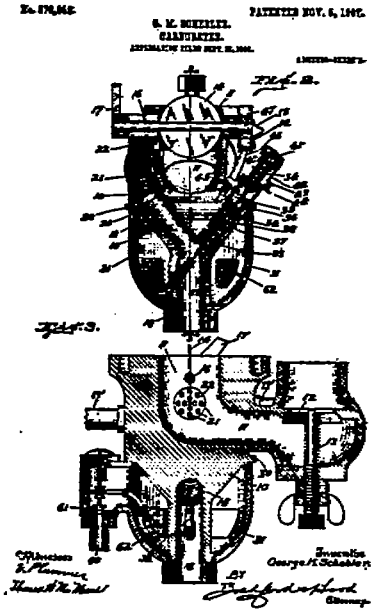

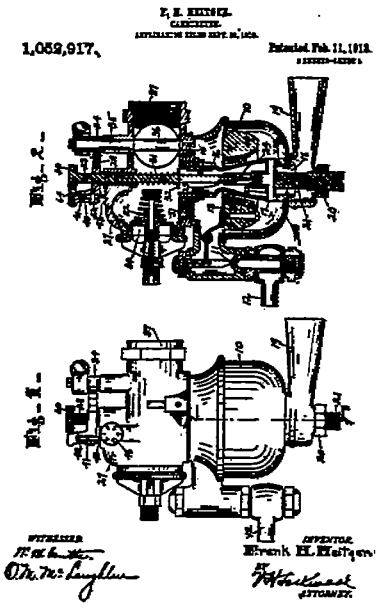

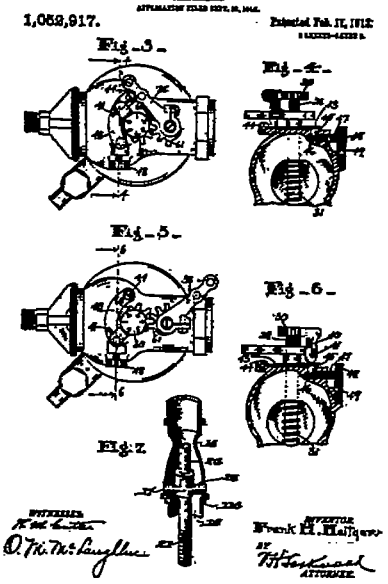

1,106,802.

Patented Aug. 11, 1914.

Fig. 1.

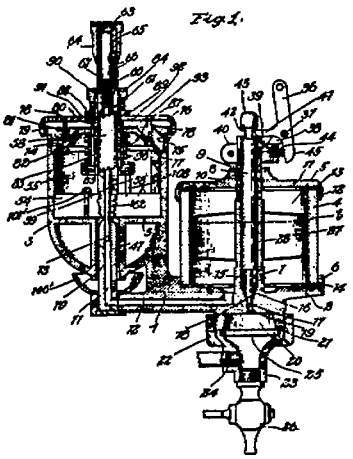

Witnesses: Lorand W. Kennedy, Fred H. Kocher

Inventor: John S. Goldberg, By Charles A. Brown, Attorney

1,106,802.

Patented Aug. 11, 1914.

Fig. 2

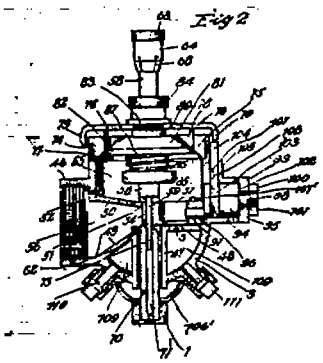

Witnesses: Lorand W. Kennedy, Fred H. Kocher

Inventor: John S. Goldberg, By Charles A. Brown, Attorney

1,178,762.

Patented Feb. 29, 1916.

Fig. 1.

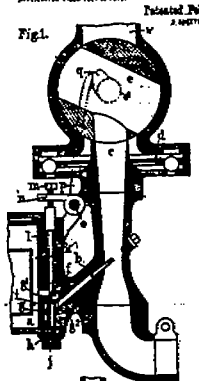

Fig. 3.

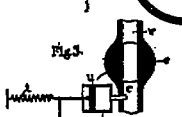

Witnesses

Inventor: Emile Henri Arquembourg, By

Attorneys

1,178,762.

Patented Feb. 29, 1916.

Fig. 2.

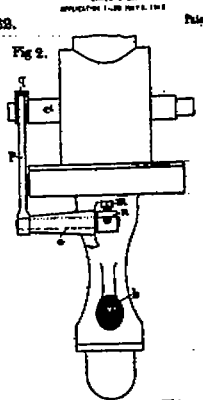

Fig. 4.

Witnesses

Inventor: Emile Henri Arquembourg, By

Attorneys

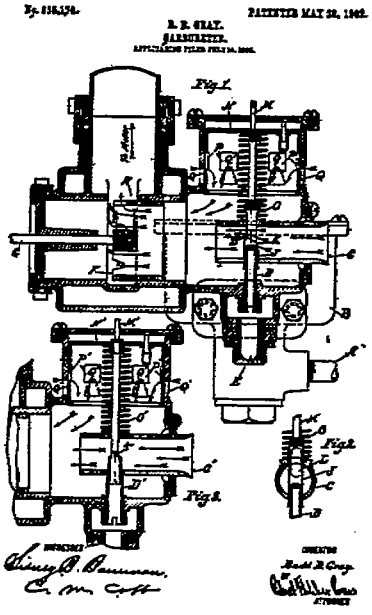
PATENTED MAY 20, 1902.
Fig. 1.
Witnesses:
Inventor:

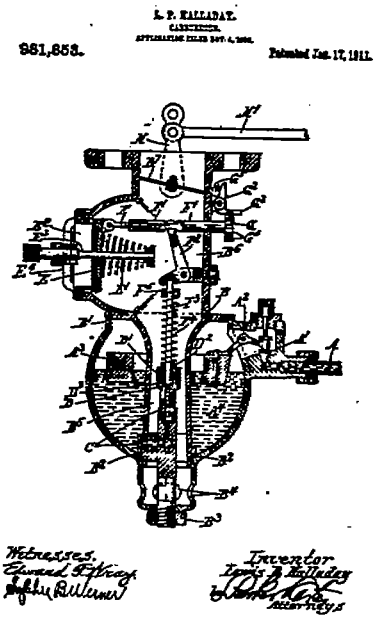
981,853.
Patented Jan. 17, 1911.
Witnesses:
Inventor:

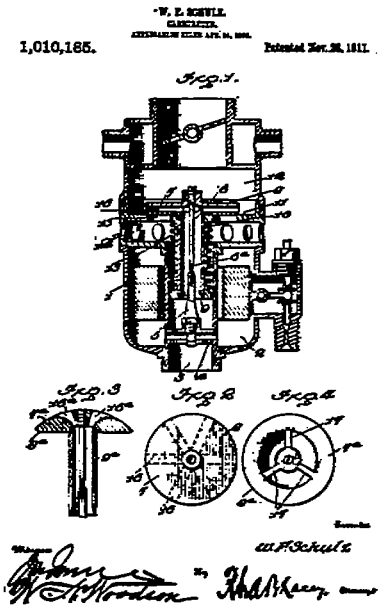
1,010,165.
Patented Nov. 28, 1911.
Fig. 1.
Fig. 2.
Fig. 3.
Fig. 4.

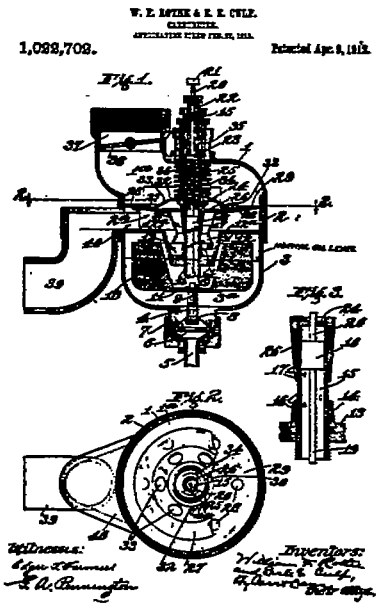
1,022,702.
Patented Apr. 9, 1912.
Fig. 1.
Fig. 2.
Fig. 3.
Fig. 4.
Witnesses:
Inventors:

F. A. SHARPNECK.
CARBURETER.
APPLICATION FILED MAR. 17, 1913.

1,096,569. Patented May 12, 1914.

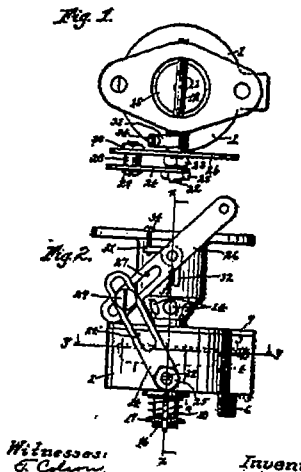

Witnesses:
E. Coleman,
B. G. Richards

Inventor,
Frank A. Sharpneck,
By Joshua R. H. Moore
his Attorney.

F. A. SHARPNECK.
CARBURETER.
APPLICATION FILED MAR. 17, 1913.

1,096,569. Patented May 12, 1914.

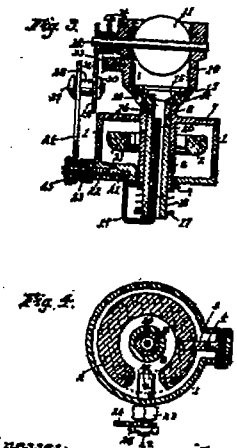

Witnesses:
E. Coleman,
B. G. Richards

Inventor,
Frank A. Sharpneck,
By Joshua R. H. Moore
his Attorney.

A. O. LAMB.
CARBURETER.
APPLICATION FILED FEB. 18, 1910.

1,106,226. Patented Aug. 4, 1914.

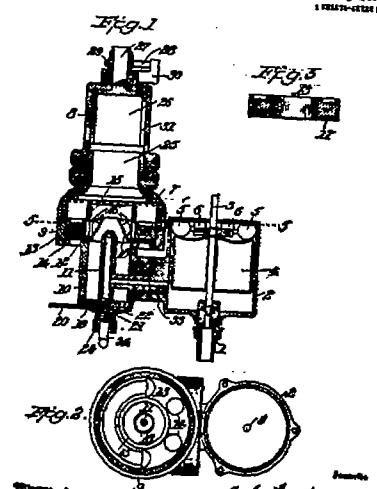

E. H. Walker
Albert Ogburn

A. O. Lamb
Sturtevant & Munson
Attorneys

A. O. LAMB.
CARBURETER.
APPLICATION FILED FEB. 18, 1910.

1,106,226. Patented Aug. 4, 1914.

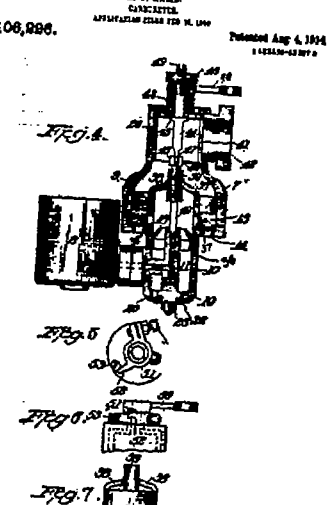

E. H. Walker
Albert Ogburn

A. O. Lamb
Sturtevant & Munson
Attorneys

1,078,590.

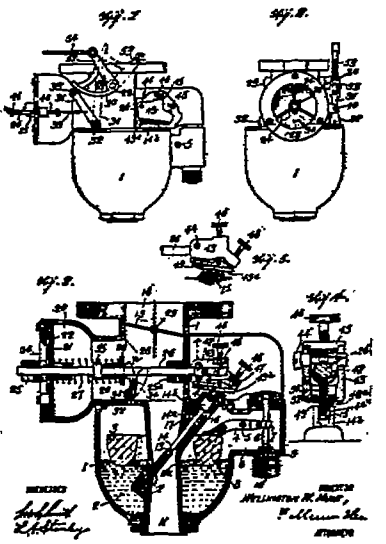

1,111,934.

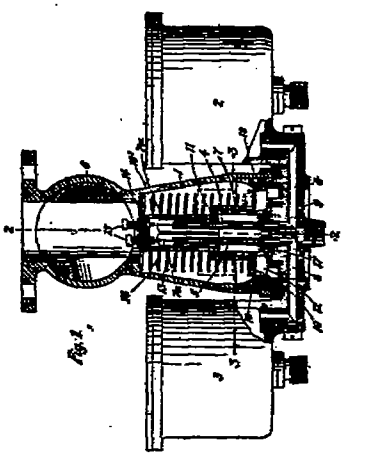

1,111,934.

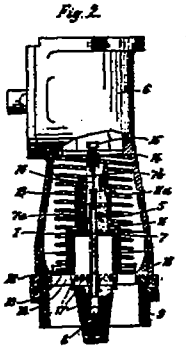

1,111,934.

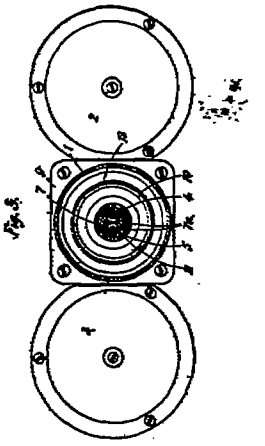

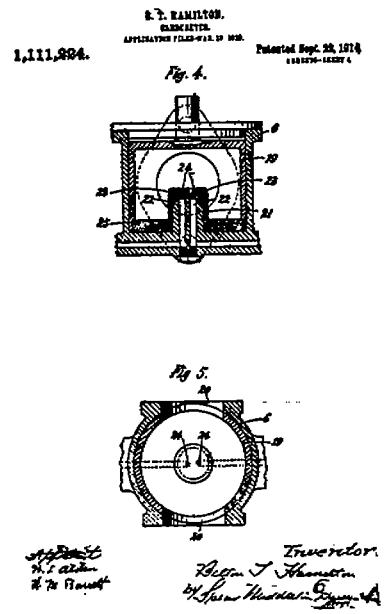
1,111,294.
Fig. 4.
Fig 5.

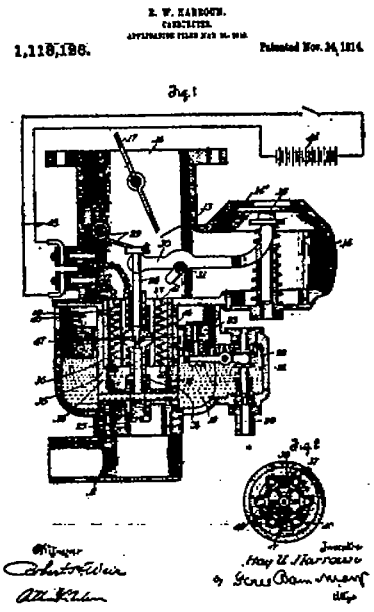
1,118,186.
Fig. 1
Fig. 2

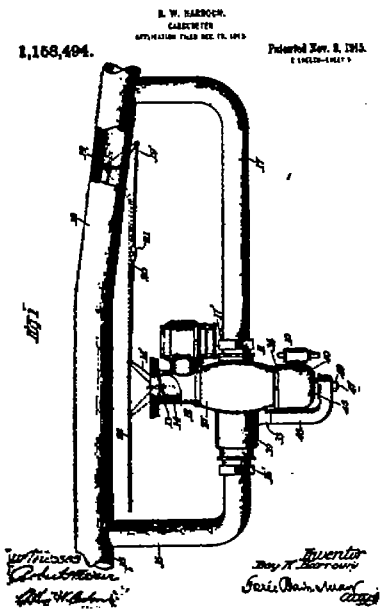
1,158,494.
Fig 1

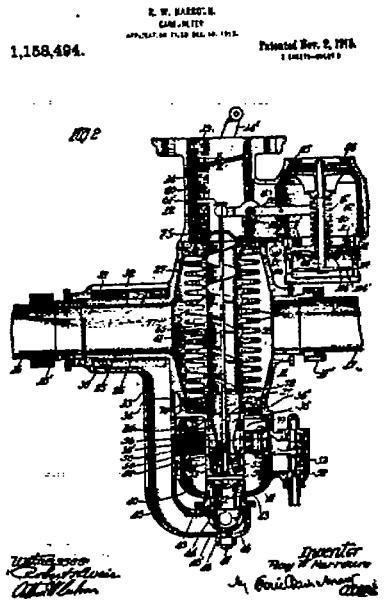
1,158,494.
Fig 2

G. M. SCHEBLER.
CARBURETER.
APPLICATION FILED FEB. 3, 1912. RENEWED SEPT. 4, 1915.

1,156,823. Patented Oct. 12, 1915

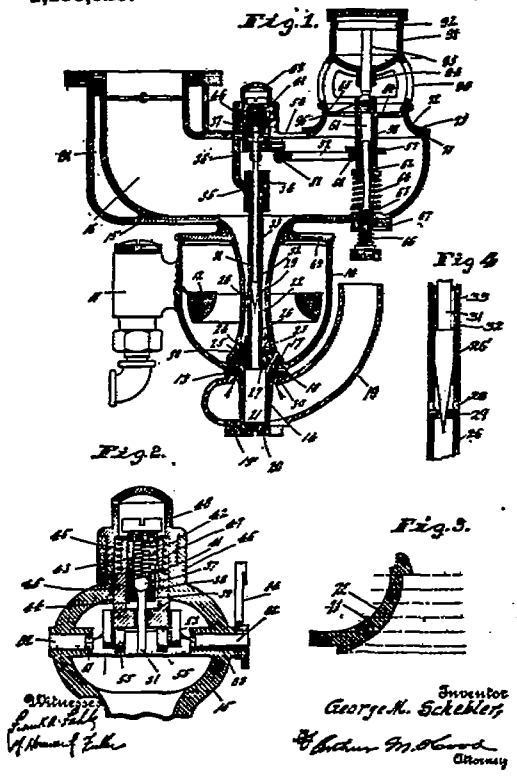

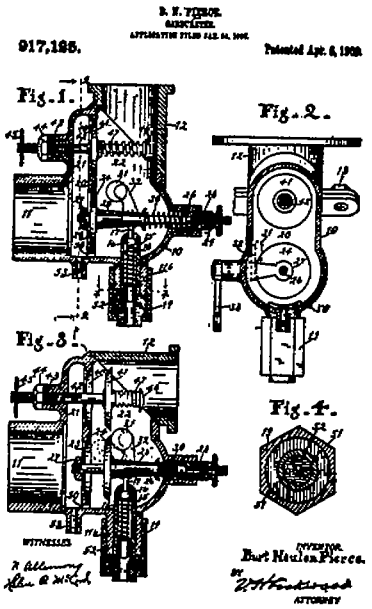
917,185.
Fig. 1.
Fig. 2.
Fig. 3.
Fig. 4.
Burt Haulen Pierce.

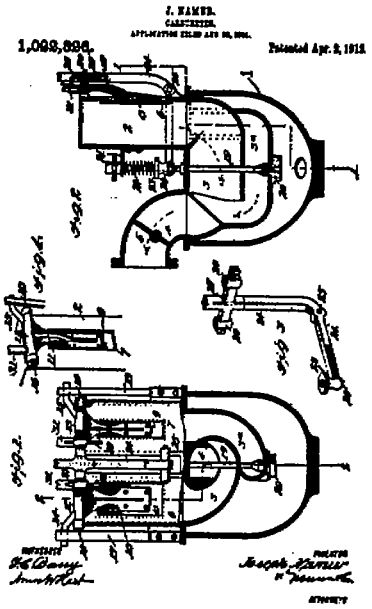
1,092,836.

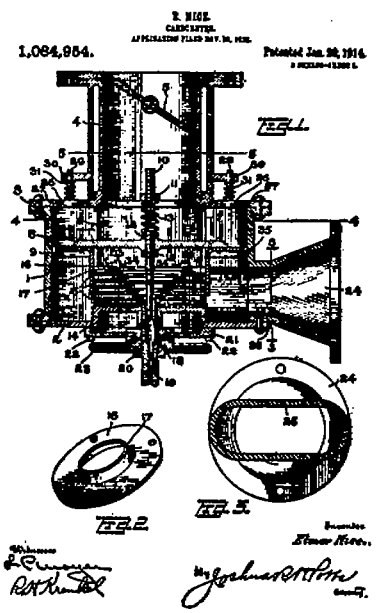
1,084,954.
FIG. 1.
FIG. 2.
FIG. 3.

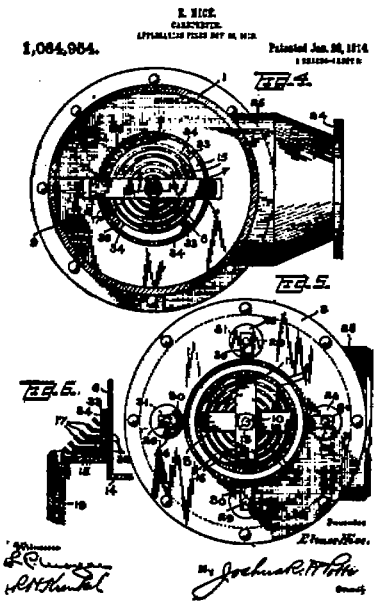
1,084,954.
FIG. 4.
FIG. 5.
FIG. 6.

A. G. HATTICKE.
CARBURETER.
APPLICATION FILED NOV. 5, 1910.

1,125,525. Patented Jan. 19, 1915.

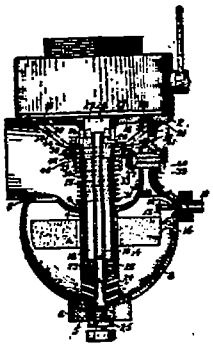

WITNESSES
G. C. Gleichauf
Thos. O'Donnell

INVENTOR
A. G. Hattickie
BY
Jno. Wright
ATTORNEY

C. F. SCHULZ.
CARBURETER.
APPLICATION FILED MAR. 4, 1910.

1,087,187. Patented Feb. 17, 1914.

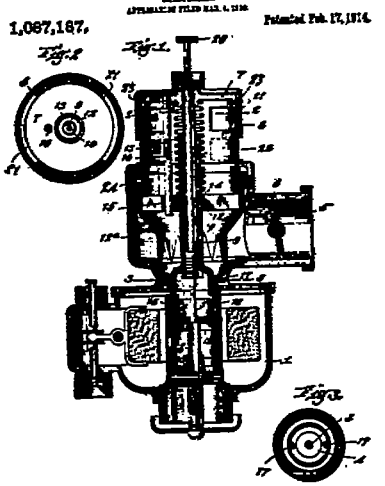

WITNESSES
A. Kerchner
H. L. Hudson

INVENTOR
C. F. Schulz
BY
Geo. H. Mott
ATTORNEY

K. HAUSMANN.
CARBURETER.
APPLICATION FILED SEPT. 26, 1910.

1,105,134. Patented July 28, 1914.

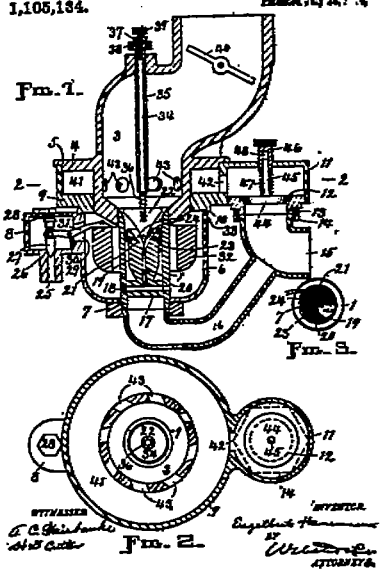

WITNESSES
G. C. Gleichauf
H. L. Cutler

INVENTOR
Engelbert Hausmann
BY
Wright Brown & Quinby
ATTORNEYS

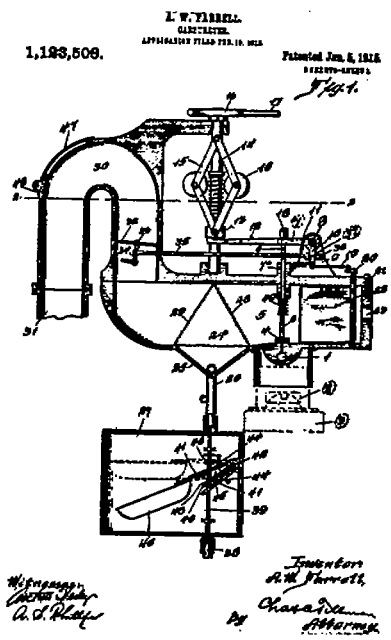
1,123,508.
Patented Jan. 5, 1915.
Fig. 1.
Inventor
Witnesses
Attorney

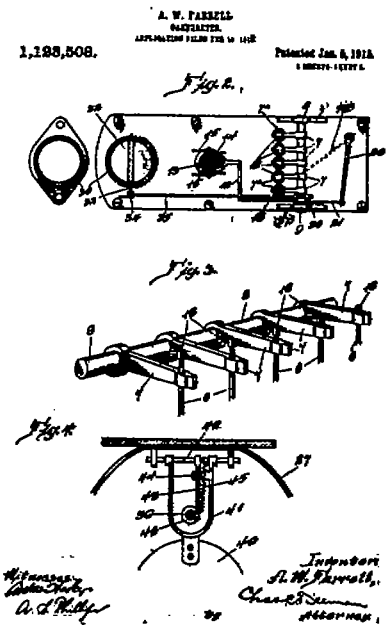
1,123,508.
Patented Jan. 5, 1915.
Fig. 2.
Fig. 3.
Fig. 4.
Inventor
Witnesses
Attorney

Class 14—Carburetors, proportioning flow, aspirating, multiple fuel and air inlets, both with regulating valves.—It would seem as if sufficient compensation could be secured by regulating fuel to air, or air to fuel, and certainly the opportunities are great with air and fuel both regulated even when there is only one inlet for each, without adopting a multiplicity of such, yet this is done in the cases of this class. However, the situation is not as complex as it might seem, because in the first place there are not many such cases, and second, these all fall into two groups, the high and low speed group or the multiple duplicate carburetor group, each of which constitutes a subclass.

On page 428 (1,123,508, Jan. 5, 1915, Farrell), a series of five fuel needles is arranged across an air passage, and they are operated from a single rocker shaft by lever arms set at slightly different angles, so that they open in succession and once open continue to increase the fuel-flow area as later ones come in. This rock shaft is linked to the throttle and to a swing type of air-inlet valve, the entering air sweeping successively the fuel jets as they come into action.

Subclass 14.1—Two fuel inlets, one fixed and one valved supplementary high-speed jet, two air inlets, one fixed primary and one valved secondary.—A single air inlet fitted with a damper type of valve, acting in the dual capacity of throttle and air valve has a hole in it, through which projects a fixed fuel nozzle for low-speed mixed flow. The damper motion controls a single variable fuel valve with multiple outlets in the combination on page 431. (1,038,040, Sept. 10, 1912, Weiss.) As the air valve swings open the fuel valve is opened and at the same time the air sweeps past the multiple outlets in varying degrees so that at first some discharge fuel, while others take in spraying air that emerges with the fuel elsewhere, though all discharge fuel later. The fixed idling jet nozzle is perforated so that it acts as a mixed-flow passage when the throttle is closed or nearly closed.

Two air inlets are provided on page 431 (1,164,661, Dec. 21, 1915, Muir), one fixed and one variable, the former with a fixed fuel inlet for low speed, the latter with a fuel valve controlled by the automatic air valve for higher speeds. This is another example of how closely classes merge one into another, for if the fixed air passage were closed or nearly so, it could be regarded as a low-speed or idling jet for a carburetor of the single variable fuel and air class. This would be the case also if the fixed jet were subjected to the same vacuum influence as the main jet, because then it would be a multiple outlet single jet instead of a multiple jet. A small fixed fuel and air inlet for low speed delivers beyond a main barrel throttle on page 432 (1,172,031, Feb. 15, 1916, Morand), the main passage consisting of fixed primary air, with secondary and fuel valve controlled by the throttle. Two air passages, a primary with a ball form of automatic air valve, and the other or secondary with a damper air valve, associated with two fuel nozzles, are shown on page 422. (1,179,381, Apr. 11, 1916, Sunderman.) A linkage connects the high-speed fuel-inlet valve and the secondary air damper to the throttle. Graduation of the high-speed fuel inlet by the movement of a secondary automatic air valve, is illustrated on page 433 (1,179,386, Apr. 18, 1916, Anderson), in connection with a fixed low-speed jet in a fixed primary air inlet.

Subclass 14.2—Multiple carburetors, progressive, by throttle or vacuum.—A series of eight fuel inlets, each with a regulating valve and each in a separate passage, the air to which varies with the throttle outlet from it, are combined in one casing by using a multi-ported barrel sleeve for all air valves and throttle, the separate passages being formed within it, as shown on page 434. (1,120,184, Dec. 8, 1914, Duff.) A separate idling fixed jet and air inlet are provided beyond the throttle.

Class 15—Carburetors, proportioning flow, aspirating, thermostatic, or barometric controlled.—Assuming that a carburetor of any class whatever works satisfactorily at a given place under constant conditions of temperature and barometric pressure, it does not follow that the operation will continue to be satisfactory when the surrounding temperature or the barometric pressure changes. Of course, these variations exert a certain influence on the vaporization characteristics of the fuel, acting directly on its vapor pressure on the one hand and on the relation of the partial pressure of the vapor in the mixture to that of the air on the other, when the total pressure changes without a change of vapor pressure. These vaporization difficulties, while serious enough in themselves, are not now under discussion, attention being for the present concentrated on the proportionality problem, which is fundamental. Anything that changes the density of air will change the flow through a given passage under the influence of a given pressure drop, so that given a fixed vacuum on a fixed carburetor air passage, the amount that will flow depends on the air density, and as air density changes so will the flow change. As both absolute pressure and air temperature exert direct effects on air density, changes in them will directly cause a change in flow, the amount of which may be very considerable. This is undoubtedly greater in aero work than elsewhere, because a machine may leave sea level and in climbing reach altitude where the barometric pressure is half its previous sea-level value, a density effect of 50 per cent. At the same time the air temperature may drop from over 100° in southern or summer districts to something below zero in the high air, which correspond roughly to a density change of 20 per cent in order of magnitude in the opposite sense. From considerations such as this it becomes clear that carburetors might very properly be provided with automatic compensation for air-density changes, and that such should be provided for all those used in aero work.

Similarly, the flow capacity of a fuel passage, whether its characteristics are those of the orifice or of the capillary, depends on the viscosity of the fuel and may vary very much, indeed enough to make the difference between success and failure if the viscosity varies over the whole range that is possible with normal temperature changes, especially in those cases where heat is being applied to properly vaporize the heavier fuels or in using varying mixtures of differently viscous fuels, or two such in succession, through the same passage. Neglecting the latter condition as one requiring special treatment and concentrating on temperature change, it is clear, as in the case of the air, that temperature variations in the fuel must not be permitted to exceed a value fixed by the viscosity—temperature curve of the fuel that would result in appreciable flow changes, say, 5 per cent as a limit. This will correspond to quite a different tem-

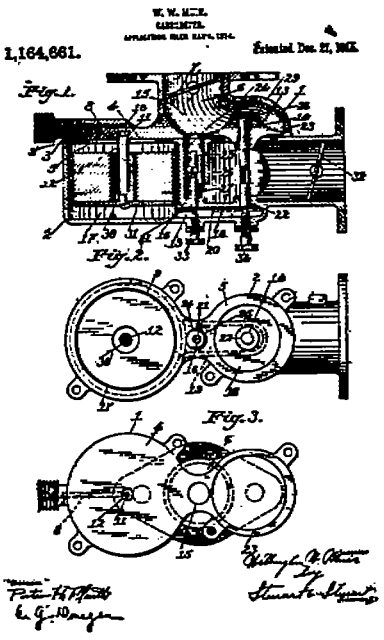
1,164,661.
Fig. 1.
Fig. 2.
Fig. 3.

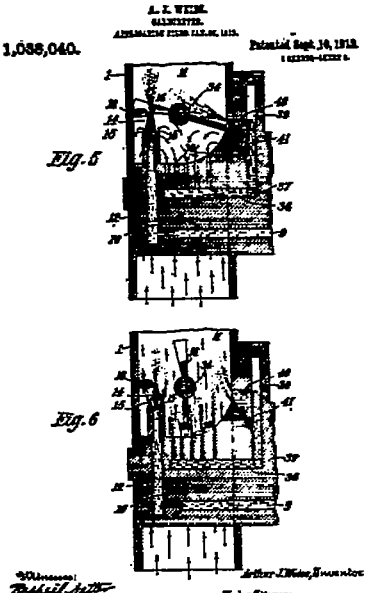
1,038,040.
Fig. 5
Fig. 6

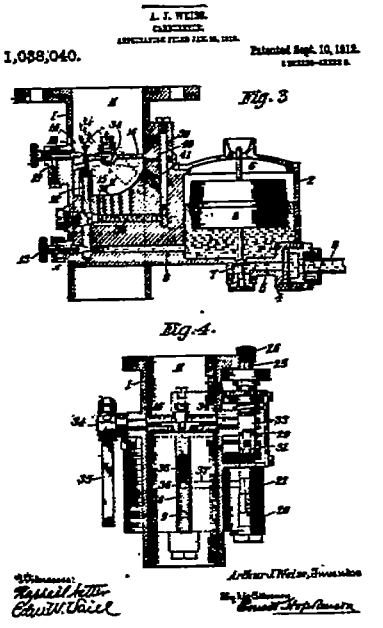
1,038,040.
Fig. 3
Fig. 4.

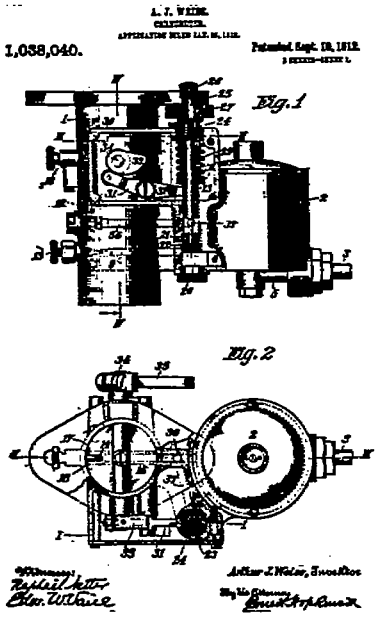
1,038,040.
Fig. 1
Fig. 2

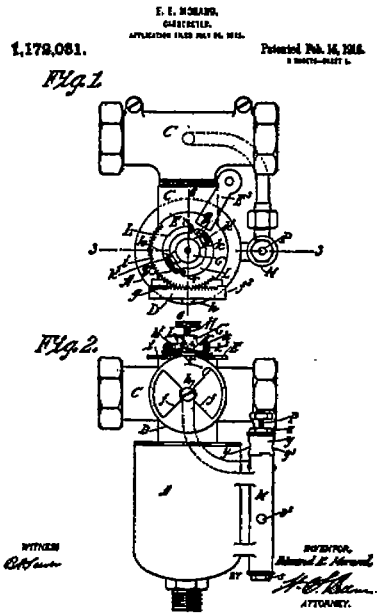
1,172,081.
Patented Feb. 15, 1916.
Fig. 1.
Fig. 2.
WITNESS
INVENTOR.
ATTORNEY.

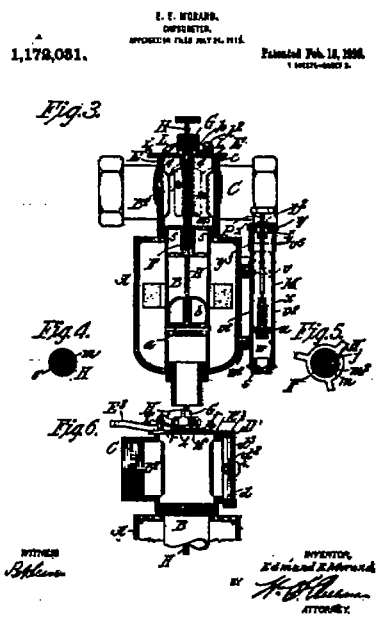
1,172,081.
Fig. 3.
Fig. 4.
Fig. 5.
Fig. 6.
WITNESS
INVENTOR.
ATTORNEY.

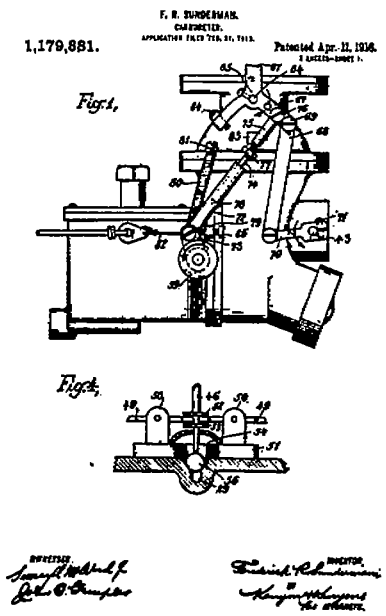
1,179,881.
Patented Apr. 11, 1916.
Fig. 1.
Fig. 4.
INVENTOR.

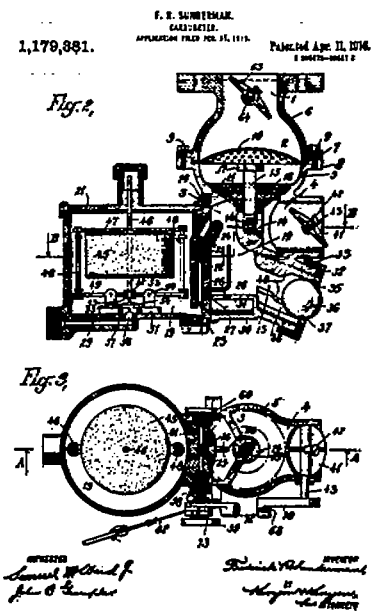
1,179,881.
Patented Apr. 11, 1916.
Fig. 2.
Fig. 3.
INVENTOR.

R. M. ANDERSON.
CARBURETER.
APPLICATION FILED MAY 27, 1912.

1,179,886. Patented Apr. 18, 1916.

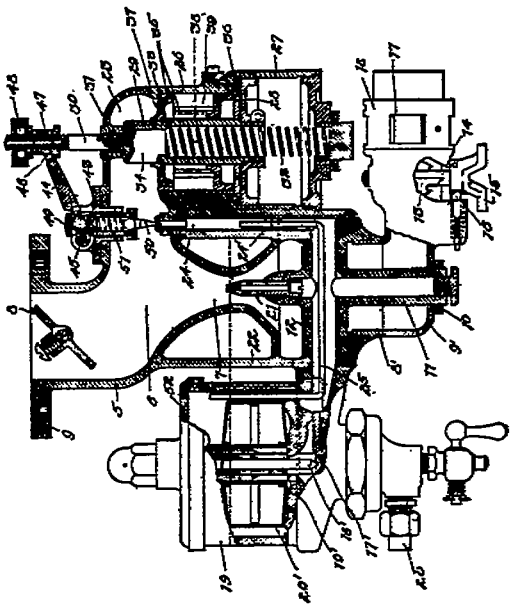

Witnesses,
Louis M. Funke
Robert F. Brach

Inventor
Raymond M. Anderson
By Brown & Williams
Attorneys.

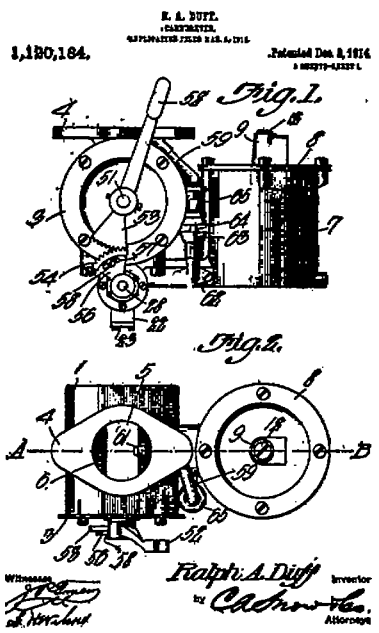
R. A. DUFF.
1,190,184.
Patented Dec. 5, 1916.
Fig. 1.
Fig. 2.
Ralph A. Duff
Inventor
Attorneys

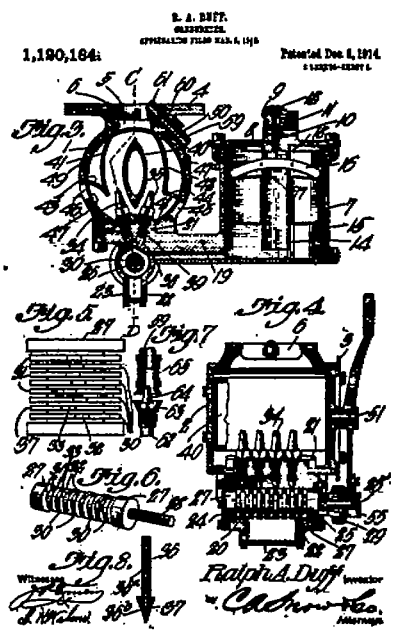
R. A. DUFF.
1,190,184.
Patented Dec. 5, 1916.
Fig. 3.
Fig. 4.
Fig. 5.
Fig. 6.
Fig. 7.
Fig. 8.
Ralph A. Duff
Inventor
Attorneys

perature range in the case of one fuel as compared with another. Equivalent to control of this temperature range for the fuel, which may not, and in some cases is not practical as interfering with vaporization, is, of course, compensation for it by control of vacuum or flow area.

There are not many patents on this subject of temperature change compensation or correction for air and fuel, or on barometric compensation for air, but it must be remembered that the realization of necessity is recent, and more may be expected along this line.

Subclass 15.1—thermostatic controls.—This sort of control may fall properly into two classes, one seeking automatically to keep the temperature from changing, and the other compensating for a temperature change by control of air or fuel valves.

The first case, that on page 436 (1,017,572, Feb. 13, 1912, Lund), is an example of the former kind. Two sources of air are provided, one hot and the other cold, the ratio determining the temperature at the carburetor, and in the present case a single valve controls the ratio, the valve being actuated by the expansion or contraction of the walls of a body inserted in the path of the mixture. This thermostat is filled with a volatile liquid and has an expanding form of wall so the vapor pressure of this fluid is fixed by the main mixture temperature, but unfortunately the mixture pressure exerts a similar effect. Increase of vacuum due to a closed throttle, has the same effect on the movement as a rise of temperature, both causing the thermostat to expand.

The second class of control, direct compensation by valve adjustment for temperature change, is illustrated on page 436. (1,110,131, Sept. 8, 1914, Green.) Here the air temperature changes operate the fuel needle valve by means of the elongation of metal rods. A more pertinent form of thermostatic compensator is that shown on pages 436 and 437 (1,135,270, Apr. 13, 1915, Duryea), which adjusts the fuel needle valve in accordance with the temperature of the air supplied to the carburetor. In this case the actuating means of the thermostat includes a closed tube, of mercury for example, with one end attached to a Bourdon tube. Changes of temperature cause the end of the Bourdon tube to move, and this adjusts the fulcrum of a lever between the automatic air inlet valve and the fuel needle, causing the latter to be adjusted automatically to air temperature without interfering with its normal regulation with air flow changes.

Another case of fuel needle adjustment, but this time for changes in the temperature of the fuel itself, independent of the air, such as could be regarded as a viscosity corrector, is that on page 437. (1,142,824, June 15, 1915, Lund.) Here the type of expanding wall chamber, filled with a liquid or a gas or partly filled with a liquid and partly with its vapor, now generally known as a syephon, is submerged in the fuel in a jacketed chamber, which may be heated or cooled. It has the fuel needle fixed directly to it and, as shown, it is suitable only for carburetors that otherwise have fixed fuel inlets.

One special case of thermostatic compensation of some practical value in dealing with fuels that are just over the border of volatility, vaporizing freely enough for use with warm air or by the heat of the passages leading to a warm engine, but not so when air and engine are cold, undertakes to solve the difficulty by opening the fuel valve at first and later closing it as the engine heats up. One of

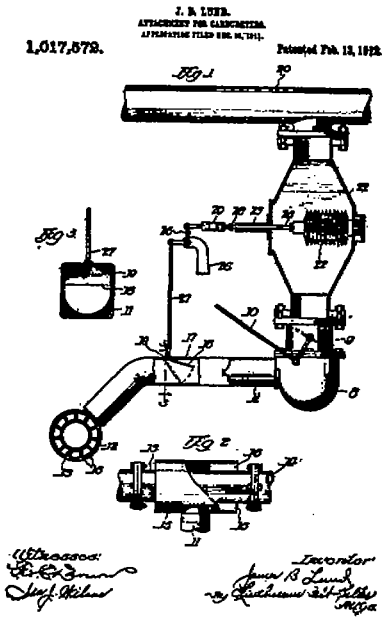
1,017,572.
Patented Feb. 13, 1912.
Fig. 1
Fig. 2
Fig. 3
Witnesses:
Inventor:

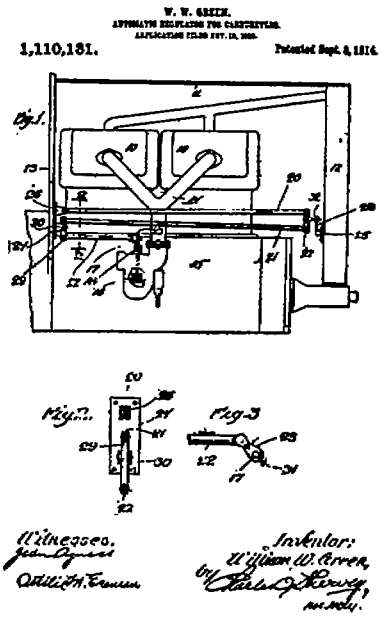
1,110,181.
Patented Sept. 8, 1914.
Fig. 1.
Fig. 2.
Fig. 3
Witnesses.
Inventor:
William W. Green,

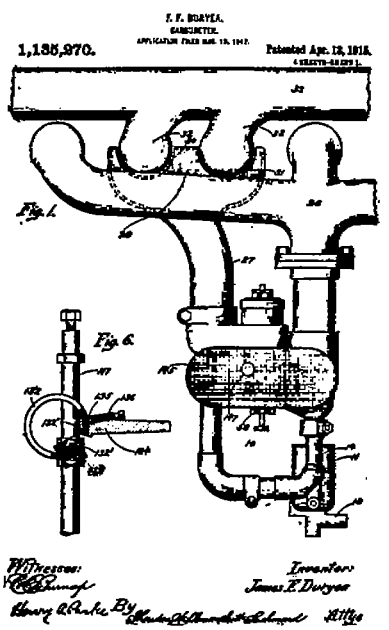
1,185,970.
Patented Apr. 13, 1916.
Fig. 1.
Fig. 6.
Witnesses:
Inventor:
James F. Duryea

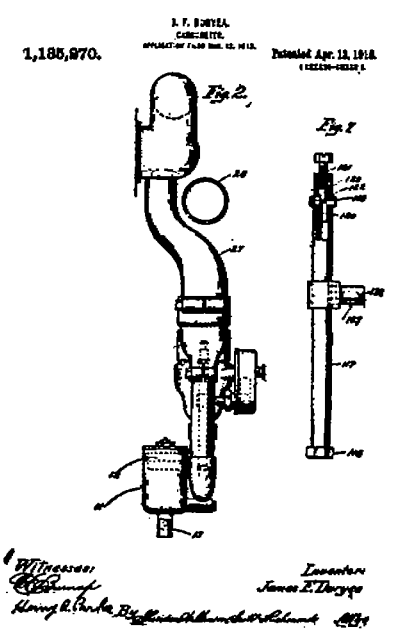
1,185,970.
Patented Apr. 13, 1916.
Fig. 2.
Fig. 7
Witnesses:
Inventor:
James F. Duryea

1,135,270.

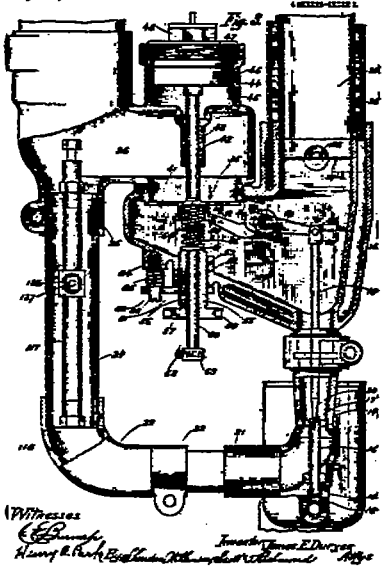

1,135,270.

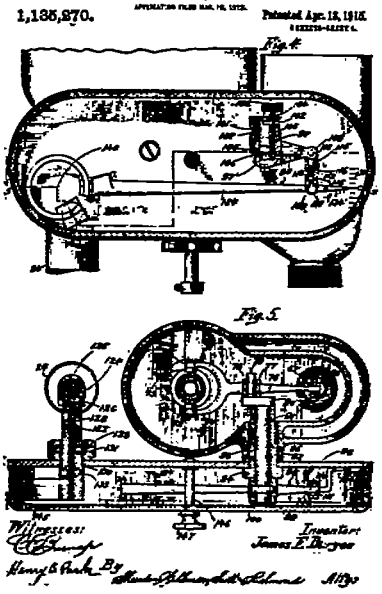

1,142,824.

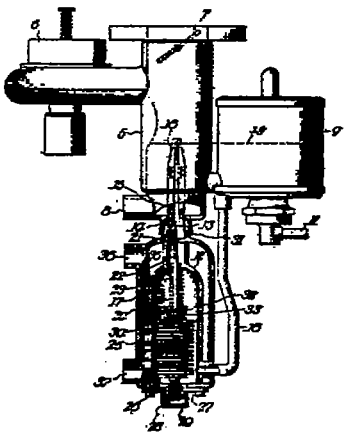

1,138,872.

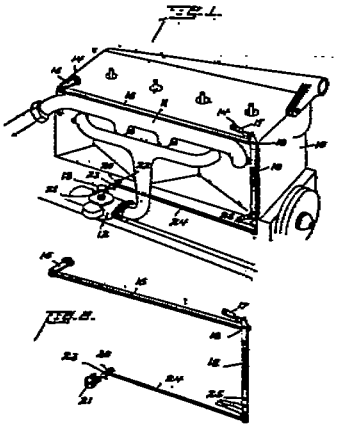

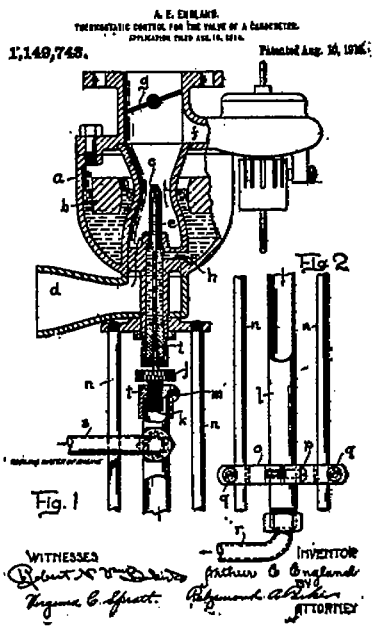
A. E. EHRLANS.
1,149,743.
Fig. 1
Fig. 2
WITNESSES
INVENTOR
ATTORNEY

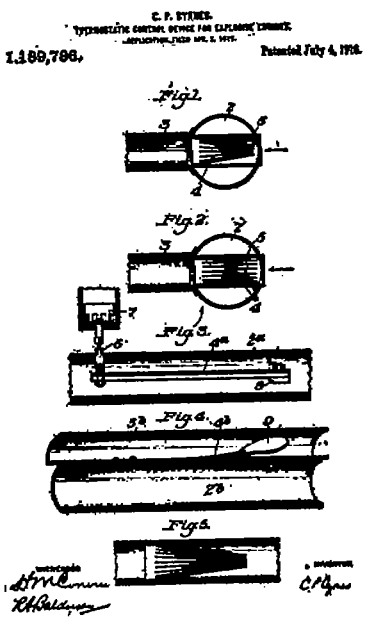
C. P. STEINER.
1,189,786.
Fig. 1
Fig. 2
Fig. 3
Fig. 4
Fig. 5

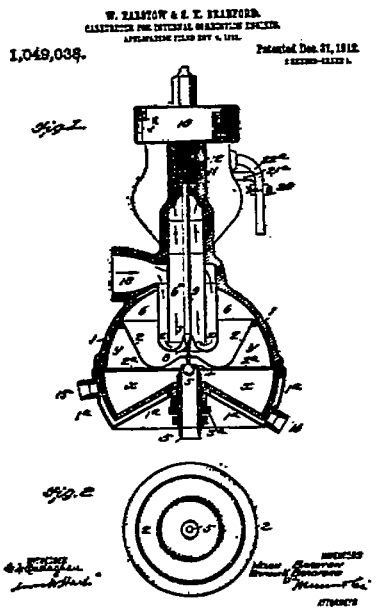
1,049,038.
Fig. 1.
Fig. 2.

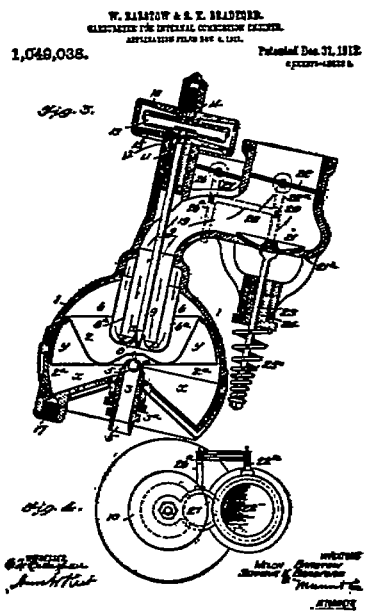
1,049,038.
Fig. 3.
Fig. 4.

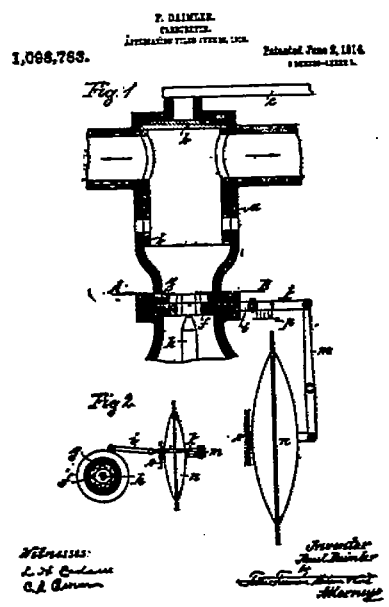
1,098,783.
Fig. 1
Fig. 2.

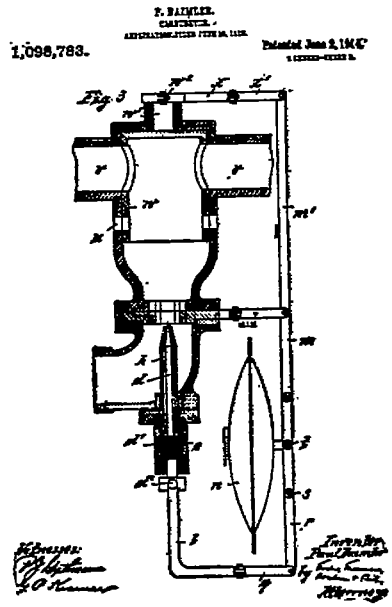
1,098,783.
Fig. 3

these actuated by the exhaust is shown on page 437 (1,133,872, Mar. 30, 1915, Maness), operates the fuel valve by the elongation of a metal rod close to the exhaust pipe, and another, page 438 (1,149,743, Aug. 10, 1915, England), uses the elongation of a tube heated by the jacket water. Both forms are directly applicable only to those classes of carburetors that have an otherwise fixed fuel inlet.

A similar effect is sought by thermostatic control of a separate secondary air valve which is closed when the air or the engine is cold so as to enrich the charge, and which opens when the temperature at the thermostat rises, diluting the charge and compensating for an over-rich mixture from the carburetor. Use is made of a thin metal bending strip on page 438 (1,189,786, July 4, 1916, Byrnes), in one case operated by exhaust and in another by the air temperature, associated with various valve forms.

Subclass 15.2, barometric controls.—A barometric diaphragm, consisting of two flexible metal sheets, joined at the edges, inclosing and forming a vacuum chamber, is fixed to the carburetor casing on one side and to the fuel needle on the other, on page 439. (1,049,038, Dec. 31, 1912, Barstow & Bradford.) Any changes of barometric pressure are compensated for by movement of the fuel needle. Incidentally there is also provided a float and float-chamber form, intended to work equally well at any angle of inclination of the carburetor from the vertical within a fairly considerable range. This form is, of course, applicable only to carburetors with otherwise fixed fuel inlets. Another form, shown on page 439 (1,098,783, June 2, 1914, Daimler), is adapted to be inserted in the train of linkage between a fuel needle and its normal source of adjustment for regulation with air flow, by moving the fulcrum of one otherwise fixed point of a lever in the linkage.

SUMMARY OF CHARACTERISTICS OF NEW CLASSES AND CONCLUSIONS ON TYPE.

On the theory that the definition of a class or subclass of carburetors is a statement of a principle of construction or functional operation directly or by implication, it would seem to be possible to divide carburetors into good, fair, and bad groups by the class and subclass divisions, and very desirable to do so as the first broad treatment of the subject of design before undertaking any analysis of structural details or dimensions. Unfortunately, however, this very desirable prospect can not be fulfilled, because any classification basis that is feasible and practical must be based primarily on the more quickly recognized features of the appliance, and these are always structural arrangments from which principles of operation must be discovered by later analysis, and the only principles of construction that can enter into class definitions are those of structural arrangement. In all cases proportions of parts and at least relative if not absolute dimensions play as important a part in the separation of the good from the bad as does the general arrangement or grouping of the elements of construction, so much, in fact, as to be responsible for one of the greatest sources of difficulty in making the class distinctions themselves. There may, for example, be two air inlets located so that both air streams act as one, and the case should

therefore be classed with those characterized structurally as having one. Again, even though the two air streams act differently, one, for example, acting as primary air passing the fuel jet and the other as secondary entering beyond it, still several possible class interpretations are possible because either the primary or the air inlets may be so small as to be negligible, in which case two class interpretatations result: First, that of all air entering beyond the jet; and, second, that of all air passing the jet in addition to the third where both air streams exert a measurably equal influence. Moreover, the small air inlet while so small as to be negligible when entering the mixing chamber directly may, on the contrary, be most potent in its influence, if, for example, it passes through the top of the float chamber or into the fuel passage, either case representing a most important and different class characterized by either of these two important means of compensation.

In spite of such conditions as these, it is possible to draw some very valuable class distinctions on the basis of possibilities of suitable automatic control of proportionality as the flow rates change, but not by the simple process of branding any one class as good or bad without qualification. Even this sort of division is most useful because it points clearly the direction that efforts should follow to improve and perfect the carburetor, and serving to divert time and money from the losses that must inevitably follow by their expenditure on the less promising types.

Of the 15 classes here established, not a single one can be wholly approved, and only one, class No. 1, wholly condemned, but naturally the subclasses of each general class, 61 in all, can be judged better than is possible for the general classes themselves. Even these, it has been found, are best judged as bad to fair, or fair to good, rather than good, fair or bad alone, except for one small set that is clearly bad. This set includes those subclasses that consist of the single fixed fuel and air inlets without any compensation whatever, and designated as subclasses 1.1, 1.2, 1.3, 1.4, 3.1, 3.2, and 3.3, 7 in all. Removing these 7 there remain of the 61 subclasses 54 that merit the broader judgment. Of these the following 20 are designated as bad to fair, and constitute the group that merits the lesser consideration, as being unequal to the rest in proportionality possibilities for engines operating at varying speeds under variable loads: Subclasses 5.1, 5.2, 6.1, 6.2, 6.3, 7.1, 7.2, 8.1, 8.3, 8.5, 9.2, 9.4, 11.1, 12.1, 12.2, 12.3, 12.4, 13.1, 13.2, 13.4. All of these subclasses are provided with proportionality compensation of some kind but considered not as adequate or suitable as that of the following 29, designated as fair to good: Subclasses 3.4, 3.5, 4.1, 5.3, 6.4, 6.5, 6.6, 7.3, 7.4, 7.5, 8.2, 8.4, 8.6, 9.1, 9.3, 10.1, 10.2, 10.3, 10.4, 10.5, 10.6, 11.2, 11.3, 12.5, 12.6, 12.7, 13.3, 13.5, 13.6. These two sets, aggregating 49 subclasses of double judgments with the previously noted 7 single judgment group, account for 56 of the total of 61 subclasses.

Of the remaining five subclasses, three—9.5, 14.1, and 14.2—are so broad in definition as to make a class judgment impossible or what is the same thing, to warrant a triple judgment of bad, fair, or good, depending on the details of each case. The remaining two subclasses—15.1 and 15.2—concerned with thermostatic and barometric control do not admit of a judgment on the same basis as the others be-

cause this sort of compensation to be useful must be added to but can not serve as a substitute for compensation for flow rate proportionality influences.

All the general classes with the exception of class 1, which includes only incompensated cases, and class 15, which is concerned only with thermostatic and barometric supplemental compensation, are not to be judged as good, fair, or bad as a class because each includes some variation of from that may be classed many of the three ways.

For the variable speed, variable load engine, the carburetor that consists merely of two passages, one for air and one for fuel, fixed in both area and position, is of no value whatever, because no matter what the form or relative position of the passages, the flow of the fuel can not be made to follow in constant ratio that of the air. Depending on the fuel supply which may be under a constant positive liquid head or be aspirated against a constant negative liquid head, and on the position of the fuel jet in the air passage which may be located to be influenced by an air entrance resistance vacuum or not, and by a positive or negative air velocity head vacuum, the fuel flow may increase faster than the air flow increases or slower, but it can not be made to increase at the same rate as the air. This is due to the nature of the flow laws of air and liquids through the various forms of passages of such dimensions as are suitable for carburetors, and it does not appear to be within the range of mechanical ingenuity or the skill of designers to overcome this condition except by departing from the simple fixed inlets or the constant fuel head, by introducing a correcting variable; in short, by providing a proper sort and amount of compensation.

The uncompensated cases thus eliminated from consideration for variable speed, variable load engines, or engines in which the flow is as much determined by engine-resting torque or speed as by throttle position includes those of subclasses 1.1, 1.2, 1.3, and 1.4, having periodic fuel valves with or without periodic air valves that open each suction stroke, but which present fixed areas for flow when open whether the fuel valve is operated mechanically from the valve gear (1.1), or is opened by the lifting of an automatic air valve with the fuel inlet in the seat (1.2), or opened by the movement of an automatic air valve in front of the fuel valve (1.3), all with a single air inlet, or any of these arrangements with a second independent air inlet (1.4). There are also included in the rejected uncompensated cases those of subclasses 3.1, 3.2, and 3.3, all having plain single fixed air and fuel inlets with reference to area and position, no matter how arranged, whether the fuel inlet is at a restricted air throat (3.1), with or without air-directing vanes, baffles, or guides (3.2), or provided with rotating spreading and mixing surfaces (3.3). It must be understood that an air or a fuel inlet is fixed when its area does not change with flow; it may have manually adjustable valves for changing a flow area, which, however, once so set remains fixed, no matter how the flow rate may change with engine speed and throttle variations.

Designers must, therefore, concentrate attention on the problem or compensation and develop, first, various schemes or qualitative means of compensation and, second, apply to each of these the physical laws belonging to or characteristic of it as the quantitative and

final means of compensation to secure properly proportioning flow carburetors correct in capacity for a given engine. Of course, in every case there must be available full and complete data (*a*) on the flow laws for every kind and size of both air and fuel passage, relating quantity to vacuum; (*b*) on the vacuum at every point in an air passage where a fuel nozzle might be located and its law of change with air flow to fix the relation between air flow and fuel flow through this common vacuum. Without such data, now pretty generally lacking, the amount of compensation needed can not be known without experimental trial, which, of course, while one means of solution, is not a proper one, and certainly is not a means that can be characterized as design.

So far, improvement of carburetors has followed almost entirely the qualitative line, attention having been concentrated on compensating schemes almost to the exclusion of the quantitative determination of flow or proportionality laws to reduce to tabular, graphic, or algebraic form either the amount of compensation required or the degree of success attained with what has been provided by cut-and-try empiric methods. Now that a reasonable number of compensating means has been disclosed, any one of which would seem to be adequate if properly applied, the time seems ripe for reducing to the quantitative basis the various flow laws of each element and for the combination of such elements that make up a carburetor.

Compensating means for proportioning flow carburetors are of three general types, and there are several specific classes of each type now available. These three types are named, first, flow area; second, fuel head; and, third, combined flow area and fuel head.

Compensation by flow area includes all those arrangements in which either the air-flow area or the fuel-flow area, or both, is varied with the flow rate automatically in such a way as to correct for departures from constancy of proportionality; reducing the fuel or increasing the air-flow area whenever fuel is in excess by just the right amount to reduce the excess to zero, and the opposite when air is in excess. This may be done by providing (*a*) a graduating fuel-inlet valve in connection with a fixed-air inlet; (*b*) a graduating air-inlet valve in connection with a fixed-fuel inlet; (*c*) graduating valves on both fuel and air inlets; (*d*) a multiplicity of fixed-fuel inlets coming into action successively in connection with a similar multiplicity of fixed-air passages; (*e*) a multiplicity of fixed-fuel inlets coming into action successively in connection with a single air passage provided with a compensating regulating valve. In all cases the flow-area change should be directly related to and controlled by the flow rate itself.

Compensation by fuel head includes all those arrangements in which the net fuel-flow head is changed from the value it would have if the fuel nozzle were fixed at a given point in the air passage where the vacuum is directly related to and determined by the air-flow rate, and if at the same time the fuel supply were taken from a constant-level chamber with a constant-surface pressure. This end may be attained by (*f*) changing the position of a fixed area fuel nozzle in a fixed area tapered air passage, or the position of the air passage around the fuel nozzle, used in connection with a constant level, constant pressure fuel-supply chamber; (*g*) admitting air to the

fuel passage at a point between the fuel-supply chamber and the fuel nozzle, to reduce the vacuum there and reduce the fuel flow, used in connection with fixed flow areas and otherwise constant fuel-supply heads; (*h*) reducing the pressure in the constant-level fuel-supply chamber, in connection with fixed flow areas; (*i*) combinations of changes of nozzle position in the air passage, float-chamber pressure, and of air admission to fuel passages. Again, it is assumed that these changes take place automatically to vary with the flow rate.

Compensation by combined flow area and fuel head, includes all of those arrangements in which the flow area and the fuel head vary at the same time. This may be done by (*j*) associating valved fuel and air inlets, (*a*), (*b*), and (*c*), with head control by nozzle position (*f*) mixed flow (*g*); or with float chamber pressure (*h*); or with their combinations (*i*); but there are two special cases of multiplicity of fixed fuel inlets coming into action successively on which the head varies at the same time. These are (*k*) the single or multiple stand pipe having fixed holes at different vertical heights above a constant-level, constant-pressure fuel-supply chamber, fixed in an air passage, so that increase of vacuum brings higher holes into action thereby increasing the flow area at a point of different vacuum than that of the lower holes; and (*l*) the tilting chamber with a series of fuel holes or nozzles, the fuel head on which changes as they are depressed with reference to the constant-level, constant-pressure fuel-supply chamber, while at the same time they move in the air passage to regions of different vacuum due to position rather than height.

In general, only one of the simple direct means of compensation is necessary, and there is not only no good end attained by combining in one carburetor more than one compensation acting at the same time, but there is danger of positive harm because one may operate in opposition to the other over a part or the whole of the flow range and thereby neutralize the other, the over-all effect being no better than if no compensation at all were provided and the structure much more complicated. Those developments that have been made by the cut-and-try method are most likely to have double or triple compensation, because the first means being improperly worked out is found inadequate and another is added by the experimenter without due effort to perfect the first means. This is not always the case, however, and there are possibilities of structural arrangement that naturally tend to combine the different means of compensation and to produce not only the desired simple structure but suitable compensation as well. Such cases as this are the exception rather than the rule and should not be regarded as an argument in favor of multiple compensation which should be used only when there is a good clear advantage to be derived thereby, and when positive means are provided to prevent any possibility of interference and neutralization of one by the other.

One excellent example of this is found in the use of an air inlet valve with a fuel inlet valve where the fuel valve alone could provide adequate compensation. Here the air valve addition in the automatic form provides not only a suitable and proper actuating means for the fuel valve, but in addition it directly contributes to the prevention of a high vacuum in the mixing chamber so undesirable

from the standpoint of maximum engine capacity which requires that the fuel charge have the highest possible absolute pressure.

Those subclasses that have some sort of compensation but inadequate or impropertly applied, are judged as bad to fair, while those in which the compensation is proper in kind are judged as fair to good, depending on the degree to which use is made of the compensation possibilities, and finally the triple judgment is applied to those subclasses in which the definition may include the whole range from no compensation at all to complete and satisfactory correction of wrong proportions.

The judgment of bad to fair is applied to the following compensated subclasses because the compensation is inadequate or wrongly related to flow.

(A) Compensation wrongly related to flow because the throttle is the actuating element, and throttle position is not the determining factor in fixing the rate of flow:

I. Throttle actuates the fuel regulating valve. Subclass 11.1, single or multiple fuel inlet with single or multiple fixed air inlet; and subclass 12.4 single fixed fuel inlet, single air inlet with automatic valve.

II. Throttle actuates the air regulating valve or is itself the air valve. Subclass 7.1, single fixed fuel inlet between single air inlet valve and throttle; subclass 7.2, single fixed fuel inlet in front of single air inlet valve acting as throttle; subclass 8.1, single fixed fuel inlet fixed primary and throttle controlled secondary air; subclass 8.3, single fixed fuel inlet, automatic primary and throttle controlled secondary air; subclass 8.5, single fixed fuel inlet, primary and secondary air, both throttle controlled.

III. Throttle actuates both the fuel and the air regulating valves or, acting as the air regulating valve, actuates the fuel valve. Subclass 12.1, single fuel inlet beyond single air valve acting as throttle; subclass 12.2, single fuel inlet between single air valve and throttle; subclass 12.3, single fuel inlet at or in front of air valve acting as throttle; subclass 13.1, single fuel inlet, fixed primary and throttle controlled secondary air; subclass 13.2, single fuel inlet, throttle controlled primary and secondary air; subclass 13.4, single fuel inlet, fixed primary and automatic secondary air; part of subclasses 14.1 and 14.2, including all cases of throttle control.

IV. Throttle control of succession of multiple fixed fuel jets, in single or separate air passages. Subclass 6.2, more than two fixed fuel inlets, each in separate fixed air inlet; subclass 9.2, more than two fixed fuel inlets in single air passage; part of subclass 9.5, the tilting chamber, with multiple fuel nozzles, if tilted by the throttle or air valve, acting as throttle.

(B) Compensation wrongly related to flow because discontinuous. Two point compensation instead of continuous or multiple point by successive or alternate action of two fuel inlets, each separately adjustable for one different flow rate at the ends of the range, whether the succession be controlled by the throttle position or the vacuum in one or separate air passages. Subclass 5.1, one fixed main fuel inlet and one fixed auxiliarly high-speed jet, single fixed air inlet; subclass 5.2, one fixed main fuel inlet and one fixed auxiliary low-

speed or idling jet, single fixed air inlet; subclass 6.1, double carburetor with two fixed fuel inlets in separate fixed air passages, succession controlled by throttle; subclass 6.3, double carburetor with two fixed fuel inlets in separate fixed air passages, succession controlled by vacuum; subclass 9.4, one fixed main fuel inlet and one fixed auxiliary low-speed or idling jet in single variable air passage, vacuum or throttle succession.

The judgment of fair to good is applied to the following subclasses because each provides compensation of a proper kind, which may or may not be adequate in degree. The several subclasses are grouped according to the type of compensation that is the controlling one, if two or more are provided, as is the case in some instances.

(A) Automatically varying relation of fuel nozzle to air-passage throat. Subclass 3.4, throat moves past fixed nozzle, or nozzle moves in fixed throat, without changing fuel or air inlet area, movement controlled by the vacuum corresponding to the air-flow rate.

(B) Mixed flow fuel head control by admission of air to the fuel passage to vary the fuel flow head on the delivery side, the amount of mixed flow and air and its compensating effect controlled by the vacuum corresponding to the air-flow rate. Subclass 4.1, single fixed fuel inlet, single fixed main air inlet, with auxiliary mixed flow air inlet acting continuously perintermittently; subclass 6.5, multiple fixed fuel and air inlets, at least one air inlet entering at least one of the fuel passages, and acting continuously or intermittently; subclass 8.6, single fixed fuel inlet, multiple variable air inlets, at least one of the air inlets entering the fuel passage and acting continuously or intermittently; subclass 11.3, single or multiple fixed air inlets, at least one of the air inlets entering at least one of the fuel passages and acting continuously or intermittently.

(C) Float-chamber pressure control by passing air through the top of the float chamber to the mixing chamber to vary the fuel flow head on the supply side, the compensating effect controlled by the vacuum corresponding to the flow rate. Subclass 3.5, single fixed fuel and air inlets, with small auxiliay air flow through top of float chamber; subclass 7.5, single fixed fuel and single variable air inlets with small auxiliary air flow through top of float chamber; subclass 12.7, single variable fuel and air inlets, with small auxiliary air flow through top of float chamber.

(D) Fuel standpipe double control of fuel head and fuel flow area, the head on the successive holes and the number and area of holes controlled by the vacuum corresponding to the air-flow rate. The fuel inlets are all described as multiple fixed and associated with the following elements: Subclass 5.3, single fixed air inlet; subclass 6.6, multiple fixed air inlets; subclass 9.3, single variable air inlet; subclass 10.5, multiple fuel nozzles if tilted by vacuum or air flow.

(E) An inlet area, varied by regulating valve with single fixed fuel inlet, the valve controlled by the vacuum corresponding to air-flow rate or by the flow rate itself directly. Subclass 7.3, single air inlet, with automatic valve, fuel entering beyond; subclass 7.4, single air inlet, with automatic valve, fuel entering at point swept by entering air; subclass 8.2, fixed primary and automatic valved secondary air inlets; subclass 8.4, primary and secondary air inlets, both automatic valved.

(F) Air inlet area varied by regulating valve with multiple fixed fuel inlets in one or in separate air passage, the active area of each, and the succession of which, are controlled by a valve actuated by the vacuum corresponding to the air flow rate or by the air flow itself directly. Subclass 6.4, more than two fixed fuel inlets, each in a separate fuel passage and fixed except for the single automatic valve; subclass 9.1, multiple fixed fuel inlets in single air passage brought into action successively as the automatic valve changes the air flow area.

(G) Fuel inlet area varied by regulating valve, with single or multiple fixed air inlets, automatically with the air flow rate. Subclass 11.2, single fuel inlet, fuel valve actuated by the vacuum corresponding to the air flow rate or by the air flow itself without changing the air inlet area.

(H) Fuel and air inlet areas both varied automatically with the air flow rate, the fuel valve acutated by the automatic air valve, or the air and fuel valves independently actuated by the vacuum corresponding to the air flow rate or by the air flow itself directly. Subclass 12.5, single fuel and air inlet, fuel valve controlled by automatic air valve; subclass 12.6, single fuel and air inlet, the fuel inlet valve controlled directly by the vacuum or the air flow and the air entering through a mechanical or an air automatic valve; subclass 13.3, single fuel valve controlled directly by the vacuum or air flow with fixed primary and variable secondary air; subclass 13.3 single fuel inlet, fixed primary and automatic valved secondary air actuating the fuel valve; subclass 13.6, single fuel inlet, automatic primary and secondary air valves, one or both controlling the fuel valve; part of subclasses 14.1, and 14.2 including all those cases where the fuel and air control is automatic and not by throttle.

(I) Successive point fuel-area control with regular variation of air area automatically. Subclass 10.1, two fuel inlets, one fixed main jet, and one fixed auxiliary high-speed jet brought into action at high-flow rates by the vacuum or by the action of the automatic secondary air valve, with fixed primary and automatic secondary air inlets; subclass 10.2, two fuel inlets, one fixed main, and one fixed auxiliary low-speed or idling jet brought into action by the vacuum above the throttle or by the throttle closure, with fixed primary and automatic secondary air inlets; subclasses 10.3 and 10.4, two or more fuel inlets each with a separate air passage receiving all or part of the air through an automatic valve, with or without a common automatic secondary air valve, the succession of action of the several chambers being controlled by the vacuum, respectively.

The triple judgment, or no judgment at all, applying to all the general classes except the first, which is rejected as uncompensated, also applies to the following subclasses, with the division and limitation noted in each case. The first of these is subclass 9.5, concerned with fuel-head and fuel-flow area control simultaneously, somewhat similar to the standpipe idea, but here brought into action by tilting a multijet chamber. If the tilting be accomplished by the vacuum or air flow automatically, then these cases belong in the fair to good group (D); but, on the other hand, if, as is more often the case, the tilting be done by the throttle or by an air valve acting as throttle,

then they fall in the bad to fair group (A). Similarly, subclass 14.1, two fuel inlets, one fixed and the other with a regulating valve for high speed in connection with single or multiple variable air, belongs with the fair to good group (H), if the fuel valve is controlled by the vacuum or flow, even if the air valve is throttle controlled, and more especially so if it is automatic and itself controls the fuel; whereas, on the other hand, if the fuel valve is throttle controlled even with an automatic air valve, and especially with a throttle-controlled or throttle-acting air valve, the case belongs with the bad to fair group (A). Again, those multiple carburetors each unit of which contains a variable fuel and variable air element, and to which may be added a common secondary air valve, belong to the fair to good group (H), or to the bad to fair group (A), no matter whether the succession or progression is controlled automatically or by the throttle, depending on the nature of the control of the separate unit fuel and air valves, to the former if automatic, to the latter if connected to throttle.

Assuming that by this analysis a series of typical forms and arrangements of compensating carburetors, classed as fair to good, involving a set of generally available compensating means that can be used single, or several of which can be jointly employed to coact in a single carburetor, provided interference and neutralization of their influences is prevented, it is necessary to establish some basis of distinguishing the fair from the good, or more directly to specify the elements or conditions that shall yield a good rather than merely a fair result. This is the quantitative side of the question and generally speaking is not the sort of thing that can be put into general language, but requires first the establishment of a large quantity of experimental data on flow laws or the relation of the vacuum at a point in an air passage that might be occupied by a fuel jet to the flow law of the air passage, all reduced to algebraic or at least to graphic and tabular form.

It is, however, possible to draw a few general conclusions of some value as guides. In the first place, it must be pointed out that all the different typical means of compensation that belong to the general class of varying the fuel flow head from what it would be with a fuel nozzle in a fixed position in the air passage and a constant level fuel supply at constant surface pressure are themselves dependent on flow laws. Therefore, to apply such compensation as is derivable from mixed flow float chamber pressure control, and fuel standpipes, the flow laws of the uncompensated passages must not only be known, but also the laws of flow for the compensating passages themselves. The same thing is true for the compensation by variable relation of the fuel-jet position in the air-passage throat, because unless the vacuum at every point of the throat is known for any flow rate, it is impossible to determine how much movement will be needed to compensate for the incorrect proportions that result from a fixed position. Of course, as has been pointed out before, the desired result may be attained by cut and try methods, but it is more than likely that such methods will produce only a measure of what is possible by the scientific method, though it is possible that patience and good luck may make data unnecessary. Of the three fixed pas-

sage compensating means, that by mixed flow is by all odds the best, the standpipe suffering interference by inertia and requiring excessively minute orifices when the aggregate of many shall equal in area a single one that is itself pretty small. The float chamber pressure control is next in order of promise, but is subject to interference by leaks, dirt, and splashing when under vibration or when tilted.

The next conclusion worthy of notice is that all these compensations by fuel-flow head control are applicable to fixed passageways which once established need no further adjustment except as may be required to correct for fuel and air density and fuel viscosity changes, the function of subclasses 15.1 and 15.2, though, of course, these can not be expected to correct for a change in the character of the fuel when a more viscous is substituted for a less viscous kind. This is one limitation of the fixed fuel passage carburetor, and is an offset to its excellent feature of nonadjustability, a matter of greater importance the less the skill of the operator. Perhaps a more serious drawback is the rate at which the vacuum increases and the mixture density decreases, with increase of flow rate, when the air passage is one of fixed area. It is clear that if at low speeds the air-inlet area is small enough to establish a reliably steady fluel flow, then at the maximum flow rate corresponding to the maximum speed and load of the engine the mixture vacuum will be quite high and the capacity of the engine lower than it would be if the air-inlet area increased with flow rate, other things being equal.

This is the principal argument in favor of the automatic valved air inlet, which has a good deal to recommend it otherwise, and no very serious disadvantages, if intelligently worked out. No automatic valve that requires a variable load derived from a spring, the resistance of which varies with its distortion, can be approved, nor can any loading linkage or cam arrangements in which wear or dirt may affect the motion or the loading. Any possibility of this sort means an unexpected and perhaps disastrous interference with the compensation and, therefore, with the working of the engine. There can be no corresponding objection to the use of automatic air valves that are gravity-loaded without springs or that have spring loads that are constant—that is, that do not vary with the entire range or distortion permitted, a constant load spring being precisely equivalent to a gravity load except for the item of inertia which is less. Another similar loading that is possible is the constant buoyancy of a float constantly submerged in a liquid chamber. With such loading, moreover, the air valve can be relied upon for movement over its whole range with but little, if any, change of vacuum and, therefore, becomes a means of securing a mixture at the maximum possible absolute pressure without the use of boosting fans, blowers, or pumps.

Only such forms of automatic air valve should be used as are not subject to sticking, a defect of this class of appliance, because the actuating forces are feeble. Certainly the form should be such that wear shall not interfere with the action by creating a leak path for the air. This points to centrally guided valves of the circumferential seating form rather than to piston or sleeve forms. With such slight vacuum as develops with a constant load automatic valve the

fuel flow required can be maintained only by the use of a fuel valve the area through or past which must vary with that through or past the air valve, and as such air valves are themselves equivalent to air meters, their movement indicating directly or indirectly the air flow volume, this same movement seems a most logical actuating means of the needed fuel valve. Assuming that a connection of this sort is to be used, it must be pointed out that the relative areas can be established experimentally with absolute precision without first establishing the flow laws for the air and fuel passages, because the shape of the air valve and its seat or guiding walls may be selected and the proper form of needle established by testing the proportionality over the flow range and cutting the needle or its seat to correct for deficiencies at any point. The inverse and easier method may, however, be substituted, that of selecting a needle form that is easily made with precision, and experimentally shaping the air valve or its seat. The latter is preferable because of the larger dimensions to be adjusted and the lesser consequence of shop error.

In this analysis the throttle-controlled compensations have been rejected in favor of those that are automatically controlled by the air-flow conditions, on the assumption that the throttle position is not a prime variable in the rate of flow in carburetors. This is certainly justifiable in the case of engines of the automobile class where resisting torque is widely variable, and therefore engine speed and carburetor flow rate also under any given throttle position. It is true to a lesser degree of engines driving screw propellers whether they be in water or in air. If the propeller for a given engine were to be always the same, and if it were to rotate in water or air always in the same state of density and of motion as to amount and direction, then it would not be true, because the engine speed and the carburetor flow rate would be controlled by the throttle alone. In view, however, of the fact that propeller-rotating resistances do vary at a given speed, especially when rotating in air, and that for a given driving torque the rotative speed will also vary, then the throttle position ceases to be a prime variable, though the situation is not so bad as with the land vehicle. That carburetors can be designed to meet the worst sort of independence of flow rate with respect to throttle position, warrants the conclusion that this sort must be approved even for the propeller service over the others that depend for their accuracy of proportioning on the assumption that flow rate is fixed by throttle position alone, and always will be no matter when, where, or how used.

All variations in flow rate through a carburetor having any sort of throttle-controlled compensation that take place at any fixed throttle position, due to changes in resisting torque mainly, though to some extent also to spark angle, must affect mixture proportions as if the throttle-actuated compensator were absent. This would most seriously disturb those classes in which the only compensation provided were throttle controlled, and less seriously those in which the throttle-controlled compensator supplements another compensator that is automatically actuated by flow conditions directly. The result would be least serious in boat and aero engines and most in land transportation machines, like the automobile, tractor, and railroad engines.

Even if it should be found in the case of propeller-drive engines for aero and marine work that throttle-controlled compensators did not seriously disturb proportionality in the carburetor, it is nevertheless advisable to use even for them those classes of carburetors having automatic compensation, controlled directly by the flow rate, unless it could be shown that more would be lost than gained by so doing. One condition that might be cited as an example justifying such a decision is that of sticking versus nonsticking of a moving part, which in the preferred group of carburetors is automatically actuated by the flow rate, but in the other is manually controlled. Even the most perfect carburetor from the proportionality standpoint might properly be described in favor of a less accurate instrument with a throttle-actuated compensator, if in the former case the movement of an air valve, for example, were irregular and jerky, until such time as improved mechanical design could remedy the defect and insure reliability of action.

REPORT No. 11.

PART V.

FLOW LAWS FOR GASES AND LIQUIDS, WITH SPECIAL REFERENCE TO AIR AND GASOLINE IN PASSAGES FOUND IN CARBURETORS, WITH COEFFICIENTS OR TEST DATA TO BE FOUND IN THE LITERATURE OF THE SUBJECT.

By Charles E. Lucke.

(A) FORMULAE FOR THE FLOW OF FLUIDS, BASED ON HYDRAULIC AND THERMODYNAMIC LAWS.

1. *Flow of fluids—General conditions.*—Before giving coefficients for special cases, it seems desirable to review briefly the general laws for the flow of gases and liquids.

The simplest case is that of a fluid, gaseous or liquid, passing through a straight pipe of unvarying cross section. If all the particles of the fluid move in straight paths parallel to the axis of the pipe, and with the same velocity, the quantity by volume passing a given cross section in unit time is $Q=u.\ A$, where u is the velocity of any particle and A the area of the cross section. This, however, does not represent the actual case. Close to the wall will be a dead layer of fluid clinging to the pipe and having no velocity. Next to this layer will be a slowly moving layer and the velocities of these thin layers will increase toward the center of the pipe, where the maximum velocity is found. In general, then, if the quantity is to be determined by velocity measurements, as, for instance, by the use of a Pitot tube, the velocity will have to be determined at a number of points representing equal areas and the actual mean velocity found. In that case the equation still is $Q=u_m.\ A$, where u_m is the mean velocity. In general, however, the equation will have to be—

$$Q=\int a.du \qquad (1)$$

Experience has shown that even the case in which friction is considered does not represent actual conditions except at the very lowest velocities, i. e., in general the individual particles do not move in straight-line parallel paths. Instead the flow is more or less turbulent. This is due to viscosity, which varies between the widest limits among different fluids, and even for any one fluid when the temperature changes. Even in the case of the lightest gases viscosity plays a certain part. Whenever the difference in velocity between two adjacent layers becomes great enough, depending on

the kind and condition of the fluid, the two layers will actually separate, and turbulent flow is the result.

If the cross section of the pipe or channel varies, the mean velocity can not remain constant. For continuous flow the weight passing any section in unit time must be constant, and if $\frac{W}{t}$ represents this quantity and u_1, A_1w_1 represent the mean velocity, area, and specific weight, respectively, at section 1, and using similar subscripts for other sections,

$$\frac{W}{t}=A_1u_1w_1=A_2u_2w_2=A_nu_nw_n \tag{2}$$

For liquids the specific weight is practically constant and the equation simplifies to

$$A_1u_1=A_2u_2=A_nu_n \tag{2a}$$

Thus for liquids the areas are inversely proportional to the velocities, and for very small pressure changes this also applies to gases and vapors with sufficient accuracy.

2. *Flow of gases—General case—Theoretical flow rate.*—Not only the weight passing any cross section in unit time must be constant, but also, according to the law of the conservation of energy, the energy per unit mass at one point of the pipe must be equal to the energy per unit mass of the stuff at any other point in the pipe if there is no heat interchange with the surrounding medium. This is expressed by the equation

$$I_1+p_1v_1+\frac{u_1^2}{2g}=I_2+p_2v_2+\frac{u_2^2}{2g} \tag{3}$$
$$=\text{Constant}$$

in which $I_{1,2}$ = internal energy per pound of fluid
$p_{1,2}$ = static pressure in pounds per square foot abs.
$v_{1,2}$ = specific volume in cubic feet per pound
$u_{1,2}$ = velocity in feet per second
g = gravitational acceleration
= 32.16 feet per second per second.

This assumes the centers of sections 1 and 2 to be on the same level, i. e., a horizontal pipe. p_1 is the pressure which would be indicated on a gauge floating in the stream. It may be determined by drilling a hole at right angles to the wall of the pipe and attaching a manometer or gauge, but this will give the true static pressure only at low velocities. At higher velocities the aspirating effect lowers the readings.

Transposing

$$\frac{u_2^2}{2g}-\frac{u_1^2}{2g}=I_1+p_1v_1-I_2-p_2v_2 \tag{3a}$$

assuming adiabatic conditions,

$$I_1-I_2=\frac{p_1v_1-p_2v_2}{n-1} \text{ where } n=\frac{C_p}{C_v}$$

substituting and simplyfying,

$$\frac{u_2^2}{2g}-\frac{u_1^2}{2g}=\frac{n}{n-1}(p_1v_1-p_2v_2)$$

but,

$$p_1v_1^n=p_2v_2^n$$

hence,

$$\frac{u_2^2}{2g}-\frac{u_1^2}{2g}=\frac{n}{n-1}p_1v_1\left[1-\frac{(p_2)}{p_1}^{\frac{n-1}{n}}\right] \tag{4}$$

For continuous flow from equation (2),

$$W_{sec}=A_1\frac{u_1}{v_1}=\frac{A_2u_2}{v_2}=A_2\frac{u^2}{v_1}\frac{(p_2)}{p_1}^{1/n}$$

hence,

$$u_1=u_2\cdot\frac{A_2}{A_1}\cdot\frac{(p_2)}{p_1}1/n \tag{5}$$

substituting in equation (4)

$$u_2=\sqrt{2g\frac{n}{n-1}\cdot p_1v_1\cdot\left[\frac{1-\left(\frac{p_2}{p_1}\right)^{\frac{n-1}{n}}}{1-\left(\frac{A_2}{A_1}\right)^2\left(\frac{p_2}{p_1}\right)^{\frac{2}{n}}}\right]} \tag{6}$$

and

$$W_{sec}=A_2\left(\frac{p_2}{p_1}\right)^{1/n}\cdot\sqrt{2g\frac{n}{n-1}\cdot\frac{p_1}{v_1}\cdot\left[\frac{1-\left(\frac{p_2}{p_1}\right)^{\frac{n-1}{n}}}{1-\left(\frac{A_2}{A_1}\right)^2\left(\frac{p_2}{p_1}\right)^{\frac{2}{n}}}\right]} \tag{7}$$

This equation is based on the assumption of nonturbulent flow and neglects heat flow through the pipe walls. When it is used for Venturi meter tubes, p_1 is the upstream pressure and p_2 the pressure at the "throat." v_1 is the reciprocal of the density at upstream pressure and n for air is 1.403.

3. *Flow of gases—Theoretical flow rate for small pressure differences.*—In equation (3*a*) the right-hand member is an expression of the work during the change from condition (p_1, v_1) to (p_2, p_2). Graphically it is represented by the indicator card of an ideal air engine or air compressor, with no clearance and adiabatic expansion or compression. Now when the pressure range is very small, this diagram becomes practically a rectangle, i. e., v_2 is very nearly equal to v_1 so that equation (3*a*), is simplified and reads,

$$\frac{u_2^2}{2g}-\frac{u_1^2}{2g}=p_1v-p_2v \tag{8}$$

$$=\frac{p_1}{w}-\frac{p_2}{w} \text{ where } w=\text{mean density.}$$

It can be shown that the error of this approximation is equal to $\frac{1}{2.8} \cdot \frac{\text{Pressure range}}{\text{pressure}}$ for air, or if the error is not to exceed 1 per cent the pressure range must not exceed 2.8 per cent of the pressure. Thus for work near atmospheric pressure the pressure range must not exceed $0.028 \times 408 = 11.4$ inches of water for a maximum error of 1 per cent, or 22.8 inches if 2 per cent are allowed. It is well to know exactly what error to expect when using an approximation and not simply to speak about "small pressure drops" without specifying.

4. *Flow of gases through orifices—Theoretical flow rates—General case—Critical pressure ratio.*—When a gas flows from a large vessel through any kind of an orifice into the atmosphere or into another vessel, the pressure in the vessel p_1 being greater than the pressure outside, p_2, the general equations (6) and (7) of course apply, so long as adiabatic flow is assumed, but they may be simplified, since the term $[1-\left(\frac{A_2}{A_1}\right)_2 \left(\frac{p_2}{p_1}\right)^{2/n}$ becomes very nearly equal to one and may be neglected. In the case of the flow from the atmosphere into the carburetor, for instance u_1 becomes zero and the above term does not exist. In other cases the error will have to be determined.

With the assumption then that u_2 is very large compared with u_1, equation (6) is transformed into

$$u = 2g.\frac{n}{n-1}.p_1v_1.[1-\left(\frac{p_2}{p_1}\right)^{\frac{n-1}{n}} \tag{9}$$

where u is the velocity of efflux from the orifice and p_2 the pressure at the smallest cross section of the orifice which for the present is assumed to be a hole in a thin plate or a short converging nozzle, so that p_2 is equal to the pressure of the medium into which discharge takes place. The latter statement, however, is not generally true as will be seen below.

Equation (7) takes this form:

$$W_{sec} = A.\left(\frac{p_2}{p_1}\right)^{1/n} \sqrt{2g.\frac{n}{n-1}.\frac{p_1}{v_1}\left[1-\left(\frac{p_2}{p_1}\right)^{\frac{n-1}{n}}\right]} \tag{10}$$

or

$$W_{sec} = A\sqrt{2g\frac{n}{n-1}.\frac{p_1}{v_1}\left[\left(\frac{p_2}{p_1}\right)^{2/n}-\left(\frac{p_2}{p_1}\right)^{\frac{n+1}{n}}\right]} \tag{10a}$$

or, for air, for a round orifice of diameter d inches, the initial temperature of the air being 60° F.

$$W_{sec} = 0.000491\ d^2p_1\sqrt{\left(\frac{p_2}{p_1}\right)^{1.426}-\left(\frac{p_2}{p_1}\right)^{.172}} \tag{10b}$$

The only variable in (9) and (10) is the pressure ratio $\left(\frac{p_2}{p_1}\right)$; and if, by means of graphical method or by differential calculus, the value of $\frac{p_2}{p_1}$ for *maximum* flow is determined, the following result is obtained:

$$\left(\frac{p_2}{p_1}\right) = \left(\frac{2}{n+1}\right)^{\frac{n}{n-1}} \text{ for maximum flow.} \tag{11}$$

This is called the *critical* pressure ratio. It means that if values are calculated for W, keeping p_1 constant and gradually reducing p_2, the back pressure, the discharge increases until the critical pressure ratio is reached. If the pressure is reduced still further, the flow should begin to decrease, according to the formula, until with $p_2=0$ the flow would be zero. This is manifestly wrong, and many experimental investigations have proven that after the flow rate has reached a maximum value it remains constant, no matter how much the back pressure is reduced. Or, in other words, when this critical pressure ratio is exceeded the pressure in the mouth of the orifice is not any more identical with the pressure outside. For air with $n=1.40$ the critical pressure ratio from equation (11) is 0.528, i. e., at 53 per cent of the initial pressure the flow rate reaches its maximum value. This, as has been emphasized in another chapter, must not be overlooked by carburetor designers, since, should the pressure at the throat of the Venturi tube reach this critical value, the air flow would cease to increase, while the gasoline flow out of a nozzle located in the throat of the Venturi tube would continue to increase with the pressure drop.

The expression for maximum flow, substituting the critical value of $\left(\frac{p_2}{p_1}\right)$ from (11) in equation (10) or (10*a*), becomes

$$W_{max}=A\left(\frac{2}{n+1}\right)^{\frac{1}{n-1}}2g\frac{p_1}{v_1}\frac{n}{n+1} \tag{12}$$

5. *Same conditions as for (4)—Approximating expressions for flow rates.*—Equations (9) and (10) are very awkward for numerical calculations. Equation (8) gives very simple expressions, but is accurate only for very small pressure ranges, as was shown there. To satisfy the need for simpler forms for the whole range down to the critical pressure, various approximations have been devised. One is due to Schüler, who substituted a hyperbola with the exponent unity and having its origin on the volume axis in place of the actual adiabatic curve. This results in the following expression for the velocity at the mouth of the orifice.

$$u=\sqrt{2g\frac{(p_1-p_2)}{w_1}\cdot\frac{2\,p_1-\alpha\,(p_1-p_2)}{(p_1+p_2)}} \tag{13}$$

in which $\alpha=\frac{n-1}{n+1}\cdot\frac{1}{1-\left(\frac{2}{n+1}\right)^{\frac{n}{n-1}}}$

$=0.353$ for air.

$$W=A.\frac{u}{v_2}\text{ and }v_2=v_1.\ \frac{p_1}{p_2}\left[1-\alpha\left(1-\frac{p_2}{p_1}\right)\right] \tag{14}$$

The accuracy of this expression is as follows:

For $\frac{p_1}{p_2}=$	1.1	1.3	1.5	1.7
Error	=0%	−0.6%	−0.82%	−1.1%

6. *Flow of gases through orifices—Theoretical flow rates—Small pressure drops.*—Equation (8) which was deduced for fluids in general may be used for gas flow as long as the pressure range is very small. For the limits of accuracy, see discussion under equation (8). When the pressure ratio is less than $\frac{p_2}{p_1}=0.9$, the above given accurate equations (9) and (10) or (13) and (14) have to be used. When the pressure ratio approaches the critical value, approximate formulæ deduced from $u=\sqrt{2gh}$ in which $h=\frac{p_1-p_2}{w_1}$ are absolutely useless.

Below will be found a few enpressions based on equation (8).

Durley (Trans. A. S. M. E., vol. 27) reduces it into this form (for air flow):

For an orifice of diameter d inches,

$$W_{sec}=0.01369\ d^2\sqrt{\frac{i\ P}{T}} \tag{15}$$

in which i = difference of pressure in inches of water.
P = mean pressure of air in pounds.
T = abs. temperature of air in °F. (supposed to remain unchanged).

Durley says that "up to a pressure of about 20 inches of water above atmospheric pressure the results of equations (15) and the accurate formula (10) agree very closely. At higher differences of pressure divergence becomes noticeable."

When the discharge takes place into the atmosphere, P, in Durley's formula, is about 2,117 pounds per square foot, and

$$W_{sec}=0.6299\ d^2\sqrt{\frac{i}{T}} \tag{15a}$$

which is of the same form as Fliegner's formulæ:

$$W_{sec}=1.06\ a\sqrt{\frac{p_2(p_1-p_2)}{T}} \text{ when } p_2>0.53\ p_1 \tag{16}$$

or for less than two atmospheres to atmosphere.

$$W_{sec}=0.53\ \frac{p_1}{T_1} \text{ when } p_2<0.53\ p_1 \tag{17}$$

or for more than two atmospheres to atmosphere.

In (16) and (17) the pressures are in pounds per square *inch*. T=°F abs.

Clark, for small pressure differences, uses the form:

$$u=66.35\sqrt{h} \text{ where } h=\text{pressure difference in inches of water.} \tag{18}$$

(B) ACTUAL FLOW RATES FOR GASES—RESULTS OF EXPERIMENTAL INVESTIGATIONS—COEFFICIENTS FOR FORMULAS GIVEN IN PART A, FOR GAS FLOW.

1. *Coefficients generally necessary—Reasons.*—In the formulas mentioned so far the velocity and the weight of the fluid are seen to depend only on the pressure drop and on the flow area. Experience, however, shows that the flow rate also is affected by the cross section of the *shape* of the orifice or nozzle or channel section. And by shape is meant not so much the shape of the transverse section, whether circular or oval or square or rectangular, but the contours of the longitudinal section rather. For instance, in the case of flow from a large vessel into the atmosphere through an orifice in a thin plate, the jet begins to form on the inside, the particles of fluid being accelerated toward the opening. The consequence is that the area of the cross section of the jet a short distance from the orifice is less than that of the orifice, i. e., the jet is "contracted," and while the theoretical velocity may actually have been developed, the weight discharged per unit time is

$$W = A' \,.\, u \,.\, w \text{ where } A' = \mu\, A \text{ and } \mu < 1$$

If, in addition, due to the viscosity of the fluid, the velocity is also reduced, the velocity becomes

$$u' = \varphi\, u \text{ where } \varphi < 1$$

The weight discharged therefore is

$$W = \mu \,.\, \varphi \,.\, A \,.\, u \,.\, w.$$

Although μ and ϕ owe their origin to radically different causes, they are usually combined into one coefficient C, so that,

$$C = \mu . \varphi \text{ and } W_{\text{actual}} = C.\, W_{\text{theor}}$$

C will be called the discharge coefficient. The contraction of the stream is caused by an abrupt change in cross section, causing eddies, and thus whenever loss of energy is to be avoided, the change from one cross section to another is made so as not to break up the natural stream lines of the fluid. An orifice therefore made with a rounded entrance gives less energy loss, hence closer approximation to the theoretical formula than an orifice in a thin plate. It does not matter much what the exact shape of the entrance portion is as long as the corners are rounded off. Even a small radius sweep will result in a very considerable improvement over the sharp edged entrance.

So far the remarks apply equally to liquid and gaseous fluids. In the case of the latter, however, another phenomenon must be concidered. The conversion of kinetic energy into heat energy, due to friction and turbulent flow, means a rise in temperature. While for liquids which are practically incompressible, this temperature rise does not mean anything else but the equivalent velocity loss, in the case of gases the resulting increase of volume must be con-

sidered. The actual volume will be greater than that corresponding to adiabatic change which was assumed in the theoretical formulæ.

2. *Actual flow of gases through orifices with well-rounded entrance.*—One of the first determinations for this case was made by Zeuner. (Zeuner, Technische Thermodynamik, 1st ed., 1887, p. 220, 2d ed., 1900, p. 256.) Zeuner found for pressures greater than twice the outside pressure, that the actual flow of air was identical with the calculated values within the experimental limits of accuracy. By these experiments, made in 1871, it was proven for the first time that the discharge remained constant when the critical pressure ratio was exceeded, thus confirming the work of De Saint-Venant. In his later and more accurate experiments with orifices of 5, 11, and 15 mm. diameter, Zeuner found the actual discharge rates to be slightly less than the calculated values, or,

$$u \cong 0.97\ u_2, \text{ in which } u = \text{actual velocity}$$
$$u_2 = \text{calculated velocity}$$

For smaller pressure drops Weisbach had obtained the same value for the discharge coefficient, or $W \cong 0.97\ W_2$ where W and W_2 are the actual and calculated weights discharged in unit time. Weisbach had used short nozzles (conical converging with parallel exit and well-rounded entrance). (See Grashof, Hydraulik, p. 576.)

The addition of a diverging conical part to a converging nozzle does not affect the *theoretical quantity* discharged, and this form of nozzle, which is equivalent to a so-called Venturi tube, must be expected to show the same characteristics with respect to actual flow rate as the short nozzle excepting that the added surface will increase the friction. It may be mentioned, in passing, that the correct taper for the diverging part of a Venturi tube, which has reached such prominence in carburetor design, might be calculated from the pressure-volume relations in adiabatic flow so that the minimum pressure drop would take place, i. e., the minimum disturbance; but in the first place the calculations would be correct for one-flow rate only, and a mean value would have to be adopted, and, furthermore, since one of the principal objects in introducing a Venturi tube is to produce a good mixing effect, it would seem that the more turbulent the flow is the better it would be for general efficiency, and that good stream lines are not wanted at all. Nozzles have been investigated by many experimenters on account of their importance for steam turbines and for air and other gases—with a view toward their use in gas turbines and for the purpose of measuring large quantities of air such as the discharge of air compressors. Unfortunately, however, most of these experiments were made for pressure ranges near or beyond the critical pressure ratio—Stodola's nozzle experiments are perhaps the best known. (See his book, Die Dampf turbinen, Springer, Berlin.) Although most of his work referred to steam, a study of his investigations is most helpful to the understanding of some of the peculiar phenomena in nozzle flow.

The calculation of the discharge of nozzles which have a restriction in area, i. e., convergent-divergent nozzles, is based on the smallest cross section.

A very complete investigation of the properties of nozzles for air flow has lately been made by Thomas B. Morley, who read a paper

before the Institution of Mechanical Engineers, published in Engineering January 28, 1916. The nozzles had throat diameters between 0.193 and 0.196 inch and were made with different tapers and different lengths, all converging-diverging and all with more or less rounded entrance. Similarly to most of the nozzle and orifice investigations, the air was allowed to escape into the atmosphere from a large closed reservoir while the time rate of change of pressure and temperature in the reservoir was being observed. Initial pressures from 50 to 75 pounds per square inch abs. were used, and the discharge coefficients varied between 0.95 and 0.98. The lower values belonged to the long nozzles and for those with overrapid divergence. The coefficients were *constant* for the whole pressure range.

From all the experiments which have been quoted in this section, it follows that for orifices or nozzles with well-rounded entrance the discharge coefficients are very nearly unity.

Sanford A. Moss (see also his article on Discharge Coefficients for Air Flow, American Machinist, vol. 28, No. 3, p. 14) states (Journal A. S. M. E., September, 1916) that the discharge coefficient of a well-made Venturi tube for air is within 1 per cent of the theoretical flow.

3. *Actual flow of gases through orifices in thin plates and sharp-edged orifices diverging in the direction of flow.*—Such orifices have a very much lower discharge coefficient than the ones just mentioned, due, of course, to the great contraction.

For orifices in thin plates (sheets) of 0.394 inch up to 0.843 diameter, Weisbach (see Grashof, Hydraulik) found discharge coefficients varying between 0.55 and 0.72. The pressure ratios ranged from 1.05 to 1.65. The discharge coefficients increase very appreciably with increase of pressure difference, and are slightly less for large openings than for smaller ones.

Zeuner, for a round, sharp-edged orifice, reported discharge coefficients very nearly the same as for Weisbach's at a pressure ratio of 1.5, but after that the coefficient continued to increase even after the critical pressure had been exceeded and at a pressure ratio of 4.1 it was 0.83, beginning with 0.65 at 1.5 pressure ratio. This peculiar result apparently has not been observed by anyone else, according to Schüler, and must be accepted with caution.

Morley included one sharp-edged orifice in his nozzle experiments. (See above.) The orifice, 0.196-inch diameter, was made in a thin flat disk. The sides were beveled off, but the edge was not made sharp, a very thin cylindrical piece being left.

With the beveled side on the side of the tank, the discharge coefficient increased from 0.758 at 25 pounds per square abs. to 0.858 at 50 pounds per square abs., the back pressure being atmospheric. This corresponds to pressure ratios of about 1.7 and 3.4, respectively, i. e., near and beyond the critical ratio. The higher value agrees with Zeuner's. Moreley also reversed the disk so that the beveled side of the orifice was on the outside, and naturally obtained lower values, the coefficients for the same pressure range increasing from 0.73 to 0.84.

A. O. Müller (Forschungs-Arbeiten No. 49) investigated the flow for sharp-edged orifices similar to those last mentioned, but for very small pressure drops, about 5 to 50 mm. of water (0.2 to 2 inches).

His determinations, made with very great care, give for these conditions a discharge coefficient of 0.597, considerably more than Zeuner. Details could not be obtained.

Frequently quoted are the coefficients which were obtained by R. J. Durley. (Trans. A. S. M. E., vol. 27.) The orifices were bored in plate 0.057 inch thick. The results are given for orifices up to 6 inches diameter and for heads up to 6 inches of water. The principal conclusions were that for small orifices the coefficient increases as the head increases, but at a lesser rate the larger the orifices till for the 2-inch orifice it is almost constant. For orifices larger than 2 inches it decreases as the head increases, and at a greater rate the larger the orifice. The coefficient as the diameter of the orifice increases and at a greater rate the higher the head. The discharge coefficients varied between 0.59 for a 4½-inch orifice and 0.618 for a five-sixteenths-inch orifice, at a head of 6 inches of water. At 2 inches pressure difference the variation is even less, between 0.595 and 0.607, a mean of 0.601, which is within 0.67 per cent of Müller's figure, 0.597.

4. *Actual flow of gases over poppet valves.*—In 1905 Charles E. Lucke published a paper on the pressure drop through poppet valves (Trans. A. S. M. E., vol. 27), which is of interest on account of the use of poppet valves for auxiliary air inlets. Both flat and conical valves were investigated and the discharge coefficients are given. Naturally they vary between rather wide limits.

5. *Actual flow of gases through short tubes with sharp-edged entrance.*—In this case contraction will occur inside the tube near the entrance. If the tube is long enough the jet will fill the whole of the tube some distance from the contracted part and leave the tube with full cross section. The pressure at the point of contraction actually falls to a value less than the final, so that the velocity at that point is greater than the one corresponding to the over-all pressure drop. The weight discharged is less than that due to flow through an orifice with well-rounded entrance, but considerably greater than in the case of plain sharp-edged orifices. The fact is that the jet actually takes the shape of a converging-diverging nozzle (De Laval nozzle) and if the pressure ratio is greater than the critical pressure, the velocity of efflux may actually be greater than that due to the drop to the critical pressure.

According to Weisbach, for a short cylindrical tube 10 mm. in diameter with sharp edges the discharge coefficient for air varies from 0.75 at 1.05 pressure-ratio to 0.82 at 1.28 ratio. Zeuner, for the same kind of tube and 1.72 pressure-ratio, gives 0.85.

6. *Actual flow of gases through orifice in thin plate, but initial velocity not negligible.*—This case is of special interest since the construction is extensively used for measuring air flow. Ordinarily it is not used in carburetors. It is produced by inserting in a pipe a disk with an opening smaller than the pipe area. The contraction is not as great as in the case of flow from a large vessel, since the particles of air are already in motion and have to be deflected only very little, if the reduction in area is small.

A. O. Müller (see above) found values for the coefficient of discharge to vary from 0.641 to 1.084, depending on the ratio of cross section. The smaller the cross section the greater the loss.

E. O. Hickstein, in a paper before the American Society of Mechanical 9ngineers in December, 1915, communicated the results of tests made by him along the same line as Müller's, and the results of the two investigations check fairly well.

7. *Actual flow of gases—Loss of head in pipes.*—As was mentioned at the beginning of this chapter, two kinds of flow may be distinguished, viscous and turbulent flow. In the former, which is only possible at very low velocities, the layer of fluid near to the pipe walls sticks to the latter by adhesion and is therefore stationary. The next layer must be pushed over the first, the third over the second, and so forth, to the center of the pipe where the velocity is a maximum. This relative motion of the layers is resisted by what is called the viscosity of the fluid. Thus in viscous flow the resistance is due only to the viscosity of the fluid. When the velocity reaches a certain limit, called the critical velocity, small disturbances, eddies, begin to form, and soon the whole stream will be in a state of turbulence, such as is shown by the smoke issuing or "rolling" from a stack. Since pure viscous flow is possible only at the very lowest velocities, and since it is out of the question to devise a theoretical formula for turbulent flow of gases, all expressions for loss of head in pipes are empirical. But even so they can not be of a simple nature if they are to be generally applicable. Any such formula must involve at least the rate of flow, specific volume of air, pressure of air, diameter of pipe, length of pipe, and the head required to maintain the flow. Since the pressure is decreasing the specific volume is increasing, which again means acceleration. The condition of the pipe surface requires a separate coefficient.

The roughness of the surface, more or less pronounced in all unfinished parts, delays the motion of the particles of air. They bound off and are projected laterally into the air current, causing more disturbance and requiring to be accelerated anew.

Formulæ for pipe resistance of which any number exist and which may be found in handbooks and textbooks, are usually of the form $d\,p=\frac{f\,l\,u^2}{2\,g\,m}$ where $d\,p$ is the difference of pressure at the two ends of a long pipe of length 1, and of hydraulic mean depth m (m = diameter ÷ 4), due to a flow with mean velocity u. This equation, as Prof. Gibson (Engineering, Nov. 22, 1912) points out, only applies if the coefficient f is varied, not only with the physical condition of the interior surface of the pipe, but with its diameter, with the mean velocity of flow, with the mean pressure, and with the temperature of the air. Prof. Gibson therefore devised a formula in which the effect of these variables was expressed, and arrived at a formula of the following form,

$$d\,p=K\frac{p^{n-1}\,.\,u^n}{a^n\;d^{3-n}}\cdot\frac{u^{2-n}}{(CT)^{n-1}}$$

in which K and a are numerical constants; p and u are the mean absolute pressure and velocity in the pipe, u is the viscosity and T the absolute temperature of the air; C is obtained from the equation $p\,v=CT$; d is the pipe diameter; and n is a numerical index depending on the size and kind of pipe. The author of this formula tested it on a number of pipes for which the flow rate had been deter-

mined and obtained excellent agreement. For all cases of flow where the air is at atmospheric temperature, the drop in pressure is given with a high degree of accuracy by

$$d\,p = 0.0000346\,\frac{p^{n-1}\,u^{n}\cdot l}{6.6^{n}.\,d^{3-n}}$$

Here d and l are in feet, and p in pounds per square inch absolute. Tables are given for the value of n for different pipes and also corrections for temperatures other than 65° F.

Now, considering the nature of the carburetor problem, it is hardly likely that formulæ like the above will ever be used very much by the designer, but there is need for establishing experimentally the laws of flow resistance for such sections as are employed in the modern carburetor and manifolds.

Information on the effect of bends is incomplete. Kent (Mechanical Engineer's Pocket Book, 8th ed., p. 593) gives the effect of elbows and tees in terms of the equivalent length of straight pipe producing the same pressure drop, but the applicability to carburetors and manifolds is doubtful to say the least.

That empirical formulæ for the flow of air through large channels, such as ventilating ducts and smokestacks, on which a great deal of reliable information has been collected, will be of no use in carburetor work is self-evident.

(C) ACTUAL FLOW RATES FOR LIQUIDS—RESULTS OF EXPERIMENTAL INVESTIGATIONS—COEFFICIENTS FOR FORMULAE GIVEN IN PART A FOR FLOW OF LIQUIDS.

1. *General considerations.*—The general flow laws do not differ in principle for liquids and gases, so that practically the whole of the theoretical part of the discussion in part B applies equally well to liquids and need not be repeated.

Hydraulics is one of the oldest branches of science, and naturally there is a vast storehouse of information on everything, it would seem, pertaining to the flow of liquids. Unfortunately, however, practically all of this stored-up information is useless when we come to carburetor problems, for the simple reason that the passages which matter—those that affect the flow rate—are so small that at the velocities used they have to be classed among capillary tubes and passages. The other passages between float chamber and jet are simply made large enough and can easily be made large enough so that the velocity in them is negligible.

The problem consists in controlling the fuel flow by means of the air flow so that the proportions of air to fuel by weight is maintained constant or varied according to some predetermined rule.

The fundamental laws for the flow of liquids are exactly the same as those for gases, and there is no foundation for the general statement often made that in a carburetor with fixed nozzle and fixed air inlet the mixture becomes richer, as the flow increases, because they "do not follow the same law." The broad flow laws are the same for both media, but they do not work under the same conditions on account of the small dimensions of the fuel control passages, or

otherwise, the special forms of the flow laws for the particular air and fuel passages may be different, and usually are.

Partly the difficulty is of course due to the circumstance that the level of the fuel in the float chamber necessarily is lower than the mouth of the spray nozzle, since the fuel must not overflow when the engine is not running or when the engine is tilted. This results in a certain lag in the fuel flow, i. e., the air must have a certain velocity before the fuel will begin to flow at all. This condition is represented by the equation

$$u=\sqrt{2g(h-h_o)}$$

where u=velocity of fuel, h=suction head due to the air flow, and h=difference in level between float chamber and mouth of spray nozzle. That this only partly accounts for the discrepancy can easily be proven and has been proven by raising the level in the float chamber until it is flush with the mouth of the nozzle. Even then the fuel increases more rapidly in proportion to the air.

2. *Flow of liquids through small orifices.*—The first investigator who attacked this problem in a thoroughgoing manner was Prof. K. Rummel, Aachen, Germany, who conducted a series of tests covering a period of three years, and published the results in Der Motorwagen in 1906. (See translation in Horseless Age, Apr. 14, 1915.) The laws of liquid flow were known for two special conditions, viz, flow through a relatively long capillary tube,[1] and through orifices in the walls of large vessels. The carburetor nozzle represents an intermediate case. Prof. Rummel developed a mathematical theory of the flow and substantiated his deductions by quantitative tests. Water was used for the sake of safety and accuracy, and was perfectly satisfactory since only qualitative results were looked after.

Rummel refers to the work of Krebs, the inventor of the spring-loaded auxiliary air valve. (Revue Industrielle, 1903, No. 1.) Krebs used for the fuel flow the formula,

$$u=\sqrt{2g(h-h')},$$

and Rummel points out that this h' has to correct—

(*a*) The difference in level, as mentioned before; and

(*b*) Capillary frictional resistances in the nozzle which, therefore, in contrast to the general views on the subject, are assumed to be independent of the velocity.

Krebs then finds it necessary to introduce another correction factor to allow for the pulsating flow of the engine at higher speeds.

Still Rummel objects, and correctly so, to the implied assumption that capillary flow is independent of speed.

Poiseuille first established the law of capillary flow (Annales de Chimie et de Physique, 1843, series 3, vol. 7), with the equation $p\gamma=u\frac{32l}{d^2}\eta$ where $p\gamma$=frictional resistance, u=velocity, l=length of tube, d=diameter, and η=coefficient of viscosity.

Reynolds (Phil. Trans., London, 1883, A 174, p. 935) was the first to determine the critical velocity where turbulent flow begins and

[1] See values given by Sorel.

which was explained before. Above the critical velocity, Reynolds found the friction to vary as the 1.7 power of the velocity, but the values of u in carburetors lie uniformly below Reynold's critical velocity, therefore Poiseuville's law is valid. Unfortunately, even this law is not absolutely correct for short tubes like carburetor nozzles, and a correction is necessary.

Taking all these factors into consideration, Rummel deduces a theoretical equation which shows that a variation of the mixture proportions must actually occur unless additional air is admitted. The form of this equation is,

$$p\gamma = c_1 u + c_2 u^2.$$

The experiments subsequently made on nozzles of various kinds substantiated the correctness of the form of the equation. Prof. Rummel draws some very interesting deductions from the values obtained by him, but no useful purpose would be served in quoting these in this place. Assuming the form of his expression for the flow rate to be correct, nothing would be left but to find by experiment the proper coefficients for nozzles of different kinds, and the scientific basis for carburetor design as far as proportioning is concerned would be established. Now Rummel's investigations were published in 1906 and since then, especially in the last four or five years, very important work in this field of research has been done, and even if the general form of his equation is found to be not generally applicable, to Rummel belongs the great distinction of having once for all shown that no headway can be made in discovering the "mystery" of carburetor nozzle flow as long as investigators do not get away from the $\sqrt{2gh}$ law which simply does not apply. In spite of Rummel's work, however, and all that has followed, the impossible attempt is still persisted in, as the carburetor literature plainly shows.

The results which have been accomplished in the last few years are very well summarized by Dr. Charles H. Lees in the introduction of an article on "Laws of skin friction" (Engineering, June 2, 1916), which deals, not with carburetors, but with the resistance experienced by ships. This only illustrates the significance of the fact that the study of viscosity has helped to throw light on many problems which hitherto have resisted all attempts at rational solution.

Dr. Lees's summary is herewith given verbatim:

On the frictional resistance to the flow of fluids through pipes.

When a fluid of density ρ flows through a length l of a smooth pipe of diameter d with a mean speed over the section of the tube of v, not sufficiently large to cause the motion of the fluid to deviate from stream-line motion, the frictional resistance F to its motion is given according to Stokes by:

$$F = 8\pi\eta\, l\, v$$

where η is the viscosity of the fluid. When the speed of the fluid is increased above a certain value, called by Reynolds the "critical velocity" for that fluid and pipe, the frictional resistance increases

faster than the first power of the velocity, and at high speeds becomes nearly proportional to the square of the mean velocity. We propose to call the motion under the first law "stream-line motion," and when deviation from this law commences to call the motion "eddying or turbulent motion."

The experimental results obtained by Stanton and Pannell at the National Physical Laboratory in the turbulent flow of water and other fluids through smooth brass pipes of diameters 0.3 to 12 cm. at speeds from 5 to 5,000 cm. per second, and those obtained by Saph and Schoder at Cornell University on water in pipes from 0.3 to 5 cm. diameter, have been shown recently to lead to the following simple formula for the total frictional resistance F of a smooth pipe of length l, diameter d, through which a fluid of kinematical viscoscity γ is flowing with mean speed v:

$$F=\pi\rho l d v^2\left\{a+b\left(\frac{\gamma}{d.v}\right)^n\right\}=A\rho v^2\left\{a+b\left(\frac{\gamma}{d.v}\right)^n\right\}$$

where A is the area of the surface of the length of pipe, $a=0.0009$, $b=0.0765$, $n=0.35$, whatever be the fluid or the system of units used.

From the form of this expression it will be seen that for all mean velocities above the critical, for which

$$\frac{d\,v}{v}=3000 \text{ about}$$

the resistance over small ranges of velocity will vary approximately as a power of the velocity between 1.65 and 2.0 and that, as the diameter of the pipe increases, or the speed increases, or the kinematical viscoscity decreases, the resistance will vary more nearly as the square of the velocity.

The single power of the velocity which gives the best approximation in the neighborhood, of a particular value of $\frac{d\,v}{v}$ is:

$$n_1=2.\frac{1+\left(1-\frac{n}{2}\right)\frac{b}{a}\left(\frac{\gamma}{d.v}\right)}{1+\frac{b}{a}\left(\frac{\gamma}{d.v}\right)^n}.$$

The references quoted by Dr. Lees are the following: Stanton and Pannell (Phil. Trans. Royal Society, A, vol. 114, p. 199, 1914); Saph and Schoder (American Society of Civil Engineers' Proceedings, vol. 51, p. 253, 1903); Lees (Roy. Soc. Proc., A, vol. 91, p. 49, 1914). Recently Lander has shown that with $a=0.002$, $b=0.141$, $n=0.44$, the formula covers his measurements on the flow of water and steam through small rough, wrought-iron pipes. (Roy. Soc. Proc., A, vol. 92, 1916.)

It would seem advisable to follow Dr. Lees's practice, and name all flow below Reynold's "critical velocity" simply "stream line motion" and above this velocity "turbulent flow." There is also the danger that the designation "capillary tube" and "capillary

flow," which are so glibly used in the carburetor literature, are misunderstood. Since not small dimensions, but dimensions *and* velocity together with the viscosity of the fluid determine whether the formulæ for stream line flow or those for turbulent flow should be applied, the title "capillary tube" seems to have no significance whatever, as far as flow is concerned.

The form of equation given by Lees differs from Rummel's formula inasmuch as the second term does not contain the first power of the velocity, but the 1.65 power. It must, however, be noted that Rummel used tubes of 0.0375 cm. up to 0.0720 cm. diameter and various lengths while Stanton and Pannell employed smooth brass pipes of diameters 0.3 to 12 cm. and Saph and Schoder pipes of 0.3 to 5 cm. diameter.

That the laws of stream line flow, as formulated by Stanton and Pannell, hold for larger pipes, was established by the most interesting and instructive investigation of "Viscosity of oil in relation to its rate of flow through pipes," by Dr. R. T. Glazebrook and Messrs. W. F. Higgins and J. R. Pannell, who presented the results before the Institution of Petroleum Technologists in November, 1915. (See Engineering, Nov. 19, 1915.) The object of the research was to investigate the laws of flow of the oil in drawn-steel pipes of 3 to 5 inches diameter with a view to determining how far the pressure difference required to produce a given flow could be calculated from a knowledge of the pipe dimensions and the viscosity of the oil. As had been expected it was found that the ordinary loss of viscous flow (stream line flow) occurred as long as the velocity of flow was less than the critical velocity. The latter is given by Dr. Glazebrook as

$\rho Vd/\eta = 2{,}500$, where

V = velocity of flow in feet per second,
d = diameter of the pipe in feet
ρ = density of the oil
η = viscosity coefficient of the oil,

expressed in foot-pounds-second units (not in dynes per square centimeter, as is usually done). Interesting in this paper are also the determination of the physical constants of the oils and peculiar characteristics of some of the oils.

Now that the way has been shown, the procedure should be to analyze the various determinations of flow rates which have been published, in the light of what is now known about viscous or stream-line flow, to make new determinations for all kinds of nozzles and channels, to fix the value of the viscosity coefficient for all fluids in use, and to standardize the method of determining and expressing the viscosity coefficient.

Such work, for instance, as Mr. Robert W. A. Brewer has done, and an account of which may be found in Carburetion, by R. W. A. Brewer, D. Appleton & Co., and in a number of periodical articles, is extremely valuable no doubt, but as long as the many experiments which Mr. Brewer has made are only used to furnish coefficients for a formula of the form $Q = C.\ A.\sqrt{2gh}$, not much is gained. Brewer himself says that this coefficient of discharge applies only to a *portion* of the curve plotted with fuel discharge as ordinates and air velocities as abscissæ.

Brewer shows by actual test results that in the case of the round-hole orifice the fuel flow tends to increase too rapidly, while for an annular orifice such as is produced by a metering pin, the fuel flow lags behind. He tried, therefore, to devise an orifice which would balance the two against each other by combining the two actions in one orifice and one metering pin, the latter being of a special shape. Brewer's methods "for designing" a carburetor are, after all, nothing but cut-and-try methods, and that is exactly what should not have to be done.

It was hoped that it would be possible to analyze some of the last-named investigations, as well as others published, but unfortunately time did not permit.

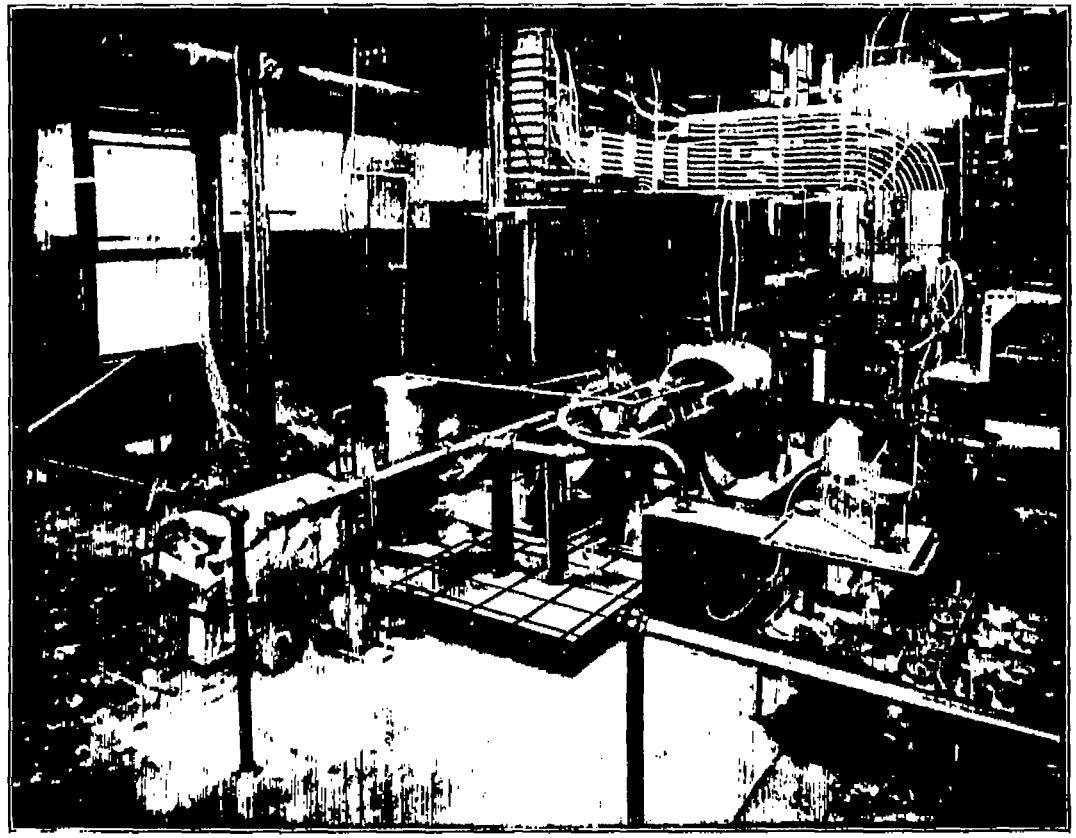

FIG. 2.

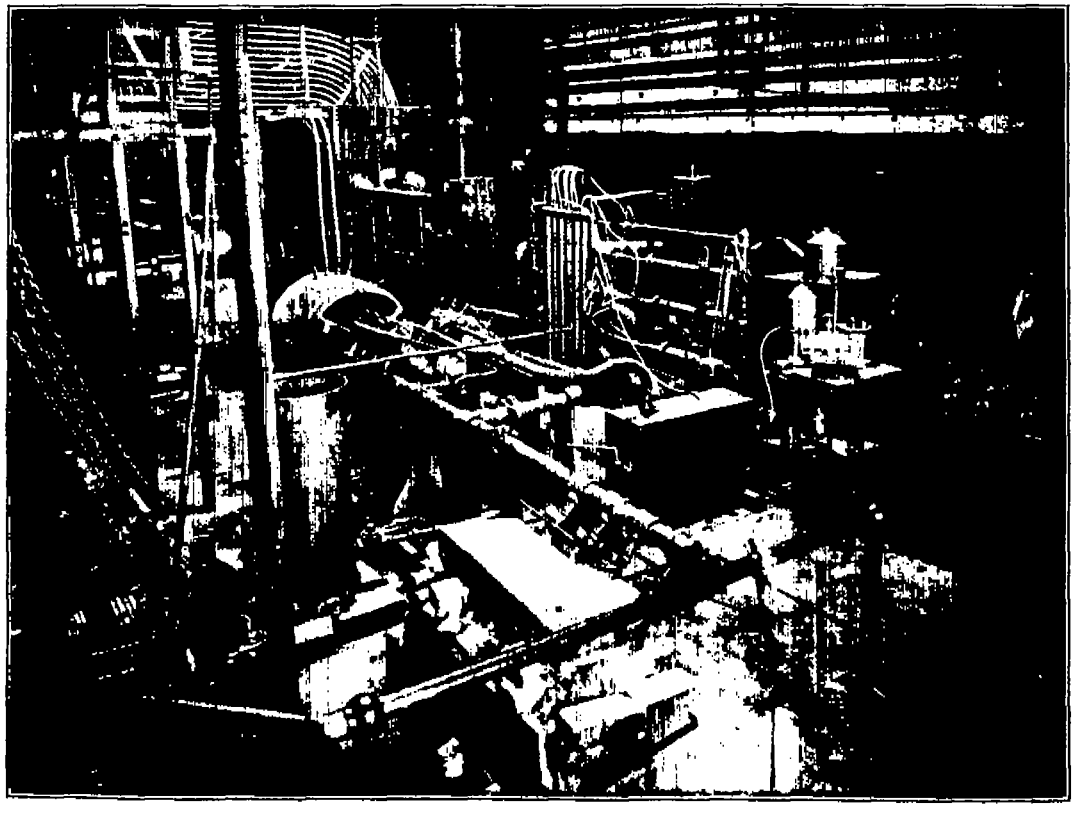

FIG. 3.

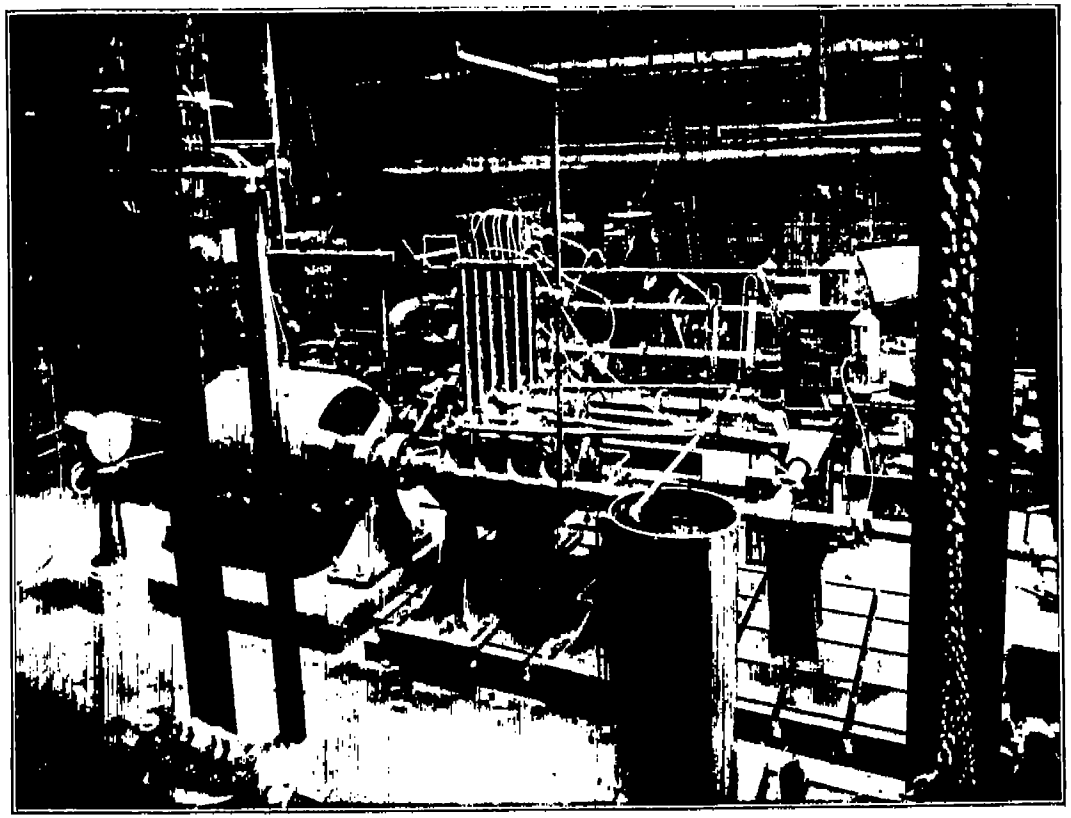

FIG. 4.

REPORT No. 11.

PART VI.

NEW EXPERIMENTAL DETERMINATIONS OF THE PROPORTIONING ACCURACY OF A SELECTED NUMBER OF TYPICAL AMERICAN COMMERCIAL CARBURETORS UNDER VARIATIONS OF FLOW CONDITIONS.

By Charles E. Lucke.

(A) NEW TEST RESULTS ON CARBURETOR PROPORTIONALITY.

The primary purpose of these tests was to determine the ratio of air to gasoline maintained by fairly representative modern carburetors under all conditions likely to arise in practical use and thus to determine their flow characteristics and accuracy of compensation at all flow rates. Since it was neither feasible nor necessary for this purpose to test all existing carburetors, a set of 10 representative type forms was selected, and it must be distinctly understood that the carburetors which were tested were not chosen because they were regarded as the best carburetors in the market, but merely because each one is well known, more or less widely used, and represents a distinct type of construction. The results obtained must be judged as typical of the class and not of the individual make only. Every known method for testing carburetors has been considered or actually tried out in the laboratory of the mechanical engineering department of Columbia University, but for one reason or another none has been found satisfactory but the method which suggests itself first, namely, to attach the carburetor to an engine. Running the engine, however, and absorbing the power by some form of dynamometer makes it extremely difficult, if not impossible, to maintain constant conditions for each run and to have these conditions the same for each type of carburetor. Since proportionality only was to be investigated and the problem, therefore, consisted in measuring the gasoline and the air under various flow conditions, the engine with open ignition circuit was driven by an electric dynamometer motor so that the speed could be maintained at any desired value with very great accuracy. In other words, the engine was used as a pump or exhauster only, but with the advantage over a blower or ejector type of exhauster that the conditions in the carburetor were exactly the same as they would be with the engine running on its own power, and any accidental backfiring could take place without danger.

The engine used for the tests was an eight-cylinder Curtiss model OX aeroplane engine, and the dynamometer, driving the engine, a 150 horsepower Sprague electric dynamometer, with switchboard and resistances as regularly supplied. The engine mounting and its con-

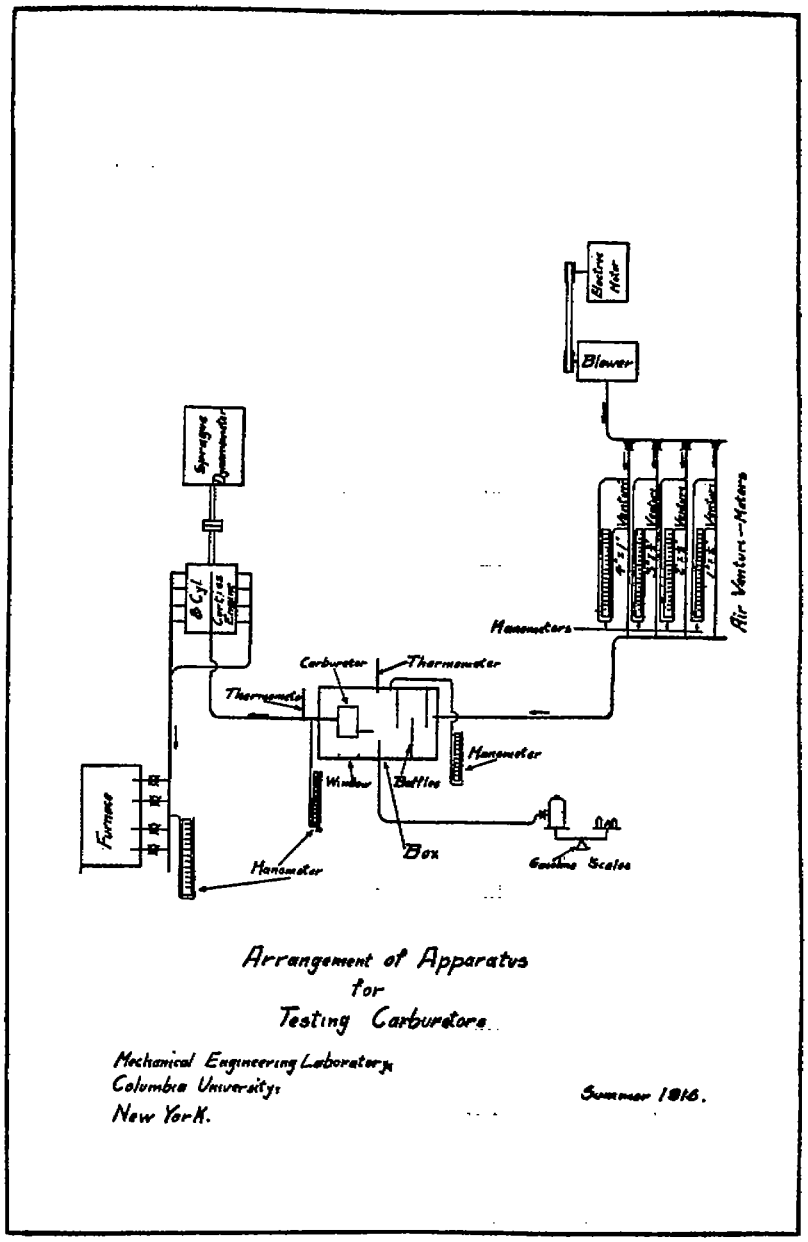
Electric Motor
Blower
Sprague Dynamometer
8 Cyl. Curtiss Engine
Venturi
Manometers
Air Venturi-Meters
Carburetor
Thermometer
Thermometer
Manometer
Baffles
Window
Furnace
Manometer
Box
Gasoline Scales
Arrangement of Apparatus
for
Testing Carburetors
Mechanical Engineering Laboratory,
Columbia University,
New York.
Summer 1916.

FIG. 1.

nections, as arranged for the tests, are illustrated in the diagram, figure 1, and in the three photographs, figures 2, 3, and 4.

The mixture discharged from the engine was burned in a crudely constructed surface combustion furnace, the mixture pressure in the exhaust line being regulated to the required value by means of burner valves of different sizes, so as to maintain sufficient mixture speed in the nozzles to prevent back flashing. This was considered the safest method under the circumstances and proved quite convenient and satisfactory in use. At the same time, by observing the nature of the flame, a great deal of time was saved in the adjustment of the carburetor, because with a little experience the mixture quality can be judged approximately by the flame size and color.

The carburetor to be tested was placed wholly within a specially constructed tight wooden box, 34 by 12 by 21 inches, serving as an air reservoir, in which the pressure could be maintained at any desired value, and was kept at one atmosphere while air was supplied by a blower through meters. The inside of the box was illuminated by an incandescent lamp, and through a window the carburetor and the fuel level gauge glass on the float chamber could be plainly seen. A handhole and cover were provided for changing carburetors and for adjustments. The throttle could be operated and fixed in position without opening the box by means of lever rods, and a spindle passing through a stuffing box with an indicator and dial on the outside of the box. Every effort was made to have the box absolutely air-tight, but, in any case, since during the present tests the pressure inside the box was maintained at atmospheric pressure within one-tenth of 1 inch of water the absence of any appreciable leakage was absolutely assured.

The gasoline was supplied from a can standing on platform scales, the latter reading to one-thousandth of a pound, and by means of flexible tubing conducted to the carburetor inside the box. The time required to consume a given weight of fuel was read on a stop watch.

The air passed through a Root blower, driven by an electric motor, to one of four Venturi tubes, 4 by 1 inch, 3 by $\frac{3}{4}$ inch, 2 by $\frac{1}{2}$ inch, and 1 by $\frac{1}{4}$ inch, respectively, which were fixed between two headers, valves at the upstream ends shutting off all tubes except the one suitable for the particular condition of each run. By manipulating a slide on the intake of the blower and a by-pass valve on the discharge side the pressure in the box was easily maintained at the desired value. The upstream pressure as well as the drop between upstream and throat were read on water manometers about 4 feet high, which are plainly visible in the illustrations.

The Venturi tubes were constructed for the purpose by the Good Inventions Co., of Brooklyn, N. Y., and every possible precaution taken to have them perfect. After the readings for gasoline weight and air flow were taken, the quantities of air and fuel per minute were calculated immediately. To simplify the calculations for the quantity of air from the Venturi tube manometer readings a straight line diagram (fig. 5) was prepared, which enabled the result to be read off directly. The formula on which the diagram is based is given on the same sheet, and the use of the diagram is indicated by the dotted lines.

The tests fulfilled in every way and even surpassed the expectations with respect to the use of Venturi tubes as meters for air meas-

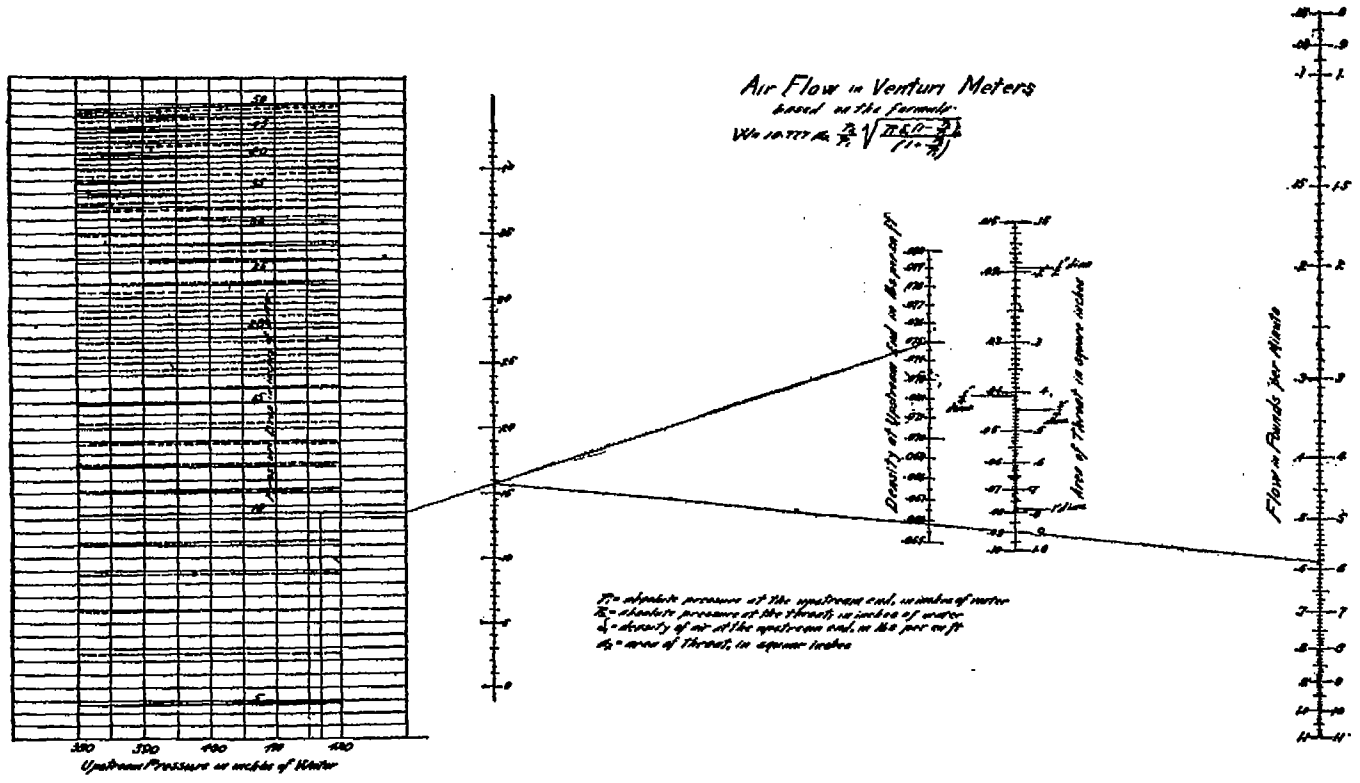
Air Flow in Venturi Meters
based on the formula:
Density of Upstream End in lbs per cu ft
Area of Throat in square inches
Flow in Pounds per Minute
Upstream Pressure in inches of Water
320
360
400
440
480

Fig. 5.

urement. No more convenient method could be desired as long as sudden fluctuation need not be dealt with, and the results confirm the claim that in a properly designed and carefully constructed Venturi tube the total pressure drop is in practically all cases negligible. The readings show (see column marked "Pressure at inlet to Venturi," which gives the total pressure drop, the downstream pressure being atmospheric) that the loss in pressure varies between one-fourth and one-sixth, the drop from upstream to throat. Therefore, 75 to 85 per cent of the pressure drop at the throat is regained in the diverging part of the tube at the end. Even with an ordinary manometer pressure may easily be read within one-tenth of an inch of water, so that the over-all pressure drop need not be more than, say, 2 inches of water for sufficient accuracy, generally a negligible drop. If a differential manometer be used, even a lower value for the minimum drop will be satisfactory. Time for a strict calibration of the Venturi tubes was not available in the short period allowed for the work, but since all authorities agree that the velocity coefficient is very nearly unity (in no case less than 0.99 for a properly constructed tube) and is constant, calibration was considered unnecessary for the purpose of these tests. That the tubes are properly constructed is proven by the very small over-all pressure drop. (See remarks by Sanford A. Moss, Jour. A. M. I. E., Sept., 1916, p. 720.)

The use of Venturi tubes for the measurement of the air supplied to the carburetor of course precluded tests intended to bring out the behavior of the carburetor when the flow suddenly increases or decreases. No method for measuring air would seem to be applicable under these conditions, and the quality of the mixture must be judged by the behavior of the engine running on its own power. Baffle plates in the box served to break up the velocity of the air. The carburetor was connected to the inlet manifolds by a flexible metallic hose.

For each run the speed of the dynamometer and engine was regulated, then the pressure in the box was brought to atmospheric, and the following readings were taken:

(1) Upstream pressure of Venturi.
(2) Drop between upstream and throat of Venturi.
(3) Pressure in carburetor box (atmospheric).
(4) Pressure at outlet of carburetor or mixture pressure in manifold intake by mercury manometer.
(5) Temperature in carburetor box.
(6) Temperature of mixture at outlet of carburetor.
(7) Engine speed (not necessarily very accurate as long as speed was kept constant).
(8) Weight of gasoline, and time consumed.
(9) Scale on gauge glass of float chamber, which was specially attached to each carburetor so as to make possible a measurement of the level of the gasoline and to observe its fluctuations.
(10) Pressure in exhaust pipe of engine, taken only for the purpose of regulating back pressure.
(11) Barometer reading.

These readings for the several runs are recorded in the log sheets, Tables II, III, IV, V, VI, VII, and VIII.

TABLE II–VIII.—*Log of carburetor tests, Columbia University, June to August, 1916.*

CARBURETOR NO. 1.

[June 27, 1916; average barometer, 29.84 inches; gasoline, S. G., 0.7275.]

Run No.	Venturi meter. Size, inch.	Venturi meter. Left, inches.	Venturi meter. Right, inches.	Venturi meter. Height, inches water.	Venturi inches Pressure at inlet, water.	Pounds air per minute.	Pounds gas per minute.	Ratio.	Pressure drop across carburetor, inches mercury.	Pressure in box.	Temperature, °F. Inlet to carburetor.	Temperature, °F. Outlet from carburetor.	Engine revolutions per minute.	Throttle opening No.	Level in float chamber, inches.	Total pounds mixture per minute.
1	1	11.5	15.9	27.4	4.0	8.12	0.630	12.90	2.10	0	82	55	1,000	Full.	0.75	8.75
2	1	11.6	16.0	27.6	4.0	8.19	.627	13.10	2.10	0	84	56	1,000	Full.	.88	8.82
3	1	8.2	12.3	20.5	2.5	7.15	.562	12.70	2.60	0	84	56	800	Full.	1.00	7.71
4	¾	20.0	21.2	41.2	7.4	5.50	.445	12.35	1.60	0	84	56	600	Full.	1.15	5.95
5	¾	14.0	14.8	28.8	3.8	4.69	.383	12.25	1.40	0	85	57	510	Full.	1.25	5.07
6	¾	21.5	19.7	41.2	7.8	2.84	.260	10.95	0.85	0	86	58.5	320	Full.	1.35	3.10
7	¾	19.8	18.3	38.1	7.3	2.75	.250	11.00	1.80	0	87	58	320	2	1.40	3.00
8	¾	11.8	12.5	24.3	5.0	4.37	.360	12.15	3.50	0	86	59	510	2	1.20	4.73
9	¾	14.3	15.5	30.3	5.8	4.78	.410	11.65	4.50	0	86	58	600	2	1.15	5.19

CARBURETOR NO. 2.

[June 28, 1916; average barometer, 29.78 inches.]

10	¾	20.9	22.3	43.2	8.5	5.60	0.442	12.7	5.9	0	84	56	800	2	1.15	6.04
11	¾	21.5	22.8	44.3	7.8	5.65	.458	12.3	6.1	0	84	55	1,000	2	.95	6.11
12	¾	21.2	22.3	43.5	7.8	5.60	.478	11.7	6.1	0	84	56	1,200	2	.95	6.08
13	1	9.5	13.3	22.8	2.8	7.50	.600	12.5	2.6	0	85	56	1,200	Full.	.95	8.10
14	¾	3.4	3.5	6.9	2.0	1.06	.118	9.0	13.1	0	92	56	950	3	1.50	1.18
15	¾	3.5	3.4	6.9	2.4	1.06	.115	9.2	14.0	0	92	55	810	3	1.50	1.18
16	¾	3.2	3.2	6.4	2.2	1.04	.112	9.3	14.6	0	92	56	605	3	1.50	1.15
17	¾	3.1	3.1	6.2	2.3	1.01	.112	9.04	14.1	0	92	57	450	3	1.50	1.12
18	¾	2.7	2.7	5.4	1.8	.95	.100	8.74	11.8	0	92	58.5	290	3	1.50	1.06
19	¾	2.7	2.7	5.4	2.0	.95	.102	9.3	11.6	0	94	60	1,200	3	1.50	1.05
20	¾	19.8	17.7	37.5	7.2	2.32	.225	10.3	7.3	0	92	60	1,200	4	1.50	2.55
21	¾	10.9	17.3	37.2	7.3	2.32	.215	10.3	8.2	0	92	64	1,000	4	1.45	2.54
22	¾	21.4	18.6	40.0	7.8	2.40	.222	10.8	9.2	0	92	64	800	4	1.50	2.62
23	¾	22.0	18.8	40.8	8.5	2.41	.219	11.0	9.7	0	92	66	600	4	1.50	2.63
24	¾	24.1	19.6	43.7	8.5	2.49	.220	11.3	7.5	0	92	66	430	4	1.50	2.71
25	¾	15.0	12.3	27.3	5.8	2.03	.187	10.9	.....	0	.....	.....	280	4	1.50	2.22
26	¾	12.5	13.3	25.8	5.3	4.45	.365	12.1	8.4	0	91	68	1,200	5	1.30	4.82
27	¾	13.6	14.3	27.9	6.0	4.60	.382	12.1	8.6	0	91	68	1,000	5	.....	4.96
28	¾	12.8	13.0	25.8	5.0	4.45	.372	12.0	8.6	0	91	68	800	5	1.25	4.82
29	¾	8.5	8.3	16.8	3.8	3.69	.318	11.6	6.2	0	92	68	600	5	1.40	4.01
30	¾	5.8	6.2	12.0	2.8	3.10	.282	11.1	.....	0	.....	.....	420	5	1.40	3.41
31	1	11.3	9.4	20.7	4.3	1.79	.171	10.5	1.5	0	93	70	210	5	1.60	1.96

CARBURETOR NO. 3.

[June 30, 1916; average barometer, 29.93 inches; gasoline, S. G., 0.7275.]

32	1	11.0	15.2	26.2	4.3	7.93	0.500	15.9	1.60	0	86	66	900	Full.	2.60	8.43
33	1	11.2	15.4	26.6	4.5	8.00	.565	14.2	1.50	0	86	66	800	Full.	2.50	8.57
34	1	12.3	16.5	28.9	4.3	8.30	.562	14.8	1.60	0	88	62	1,200	Full.	2.50	8.86
35	1	12.8	17.0	29.8	4.7	8.42	.557	15.1	1.50	0	84	58	1,400	Full.	2.50	8.98
36	1	12.0	16.3	28.3	4.8	8.25	.538	15.3	1.40	0	84	58	1,200	Full.	2.50	8.79
37	1	11.6	15.9	27.5	4.7	8.11	.518	15.6	1.30	0	84	57	1,000	Full.	2.60	8.63
38	1	9.8	13.8	23.6	4.0	7.56	.471	16.1	1.20	0	85	57	800	Full.	2.60	9.03
39	1	5.0	8.5	13.0	2.2	5.73	.378	15.2	.95	0	86	57	600	Full.	2.60	6.11
40	¾	12.5	12.4	24.9	4.0	4.40	.317	13.9	.95	0	86	57	470	Full.	2.60	4.72
41	¾	5.6	5.4	11.0	2.5	3.00	.225	13.3	.70	0	88	58	310	Full.	2.60	3.23
42	¾	1.2	10.2	11.4	3.9	.28	.036	7.9	13.70	0	92	60	210	2	2.60	.32
43	¾	5.9	15.7	21.6	6.9	.38	.032	11.7	15.20	0	94	60	345	2	2.60	.41
44	¾	6.0	15.8	22.1	7.0	.38	.035	10.9	.....	0	95	60	520	2	2.60	.41
45	¾	6.3	15.8	22.1	7.0	.38	.035	10.9	.....	0	96	62	650	2	2.60	.42
46	¾	1.0	10.0	11.0	4.8	.20	.034	8.05	15.10	0	101	70	800	2	2.60	.31
47	¾	4.8	14.3	19.1	5.8	.36	.033	10.8	14.60	0	94	64	1,000	2	2.60	.39
48	¾	4.8	14.2	19.0	5.8	.36	.034	10.7	13.30	0	96	65	1,200	2	2.70	.39
49	¾	4.6	14.1	20.7	5.8	.38	.034	11.1	13.70	0	97	65	1,400	2	2.70	.41
50	¾	24.4	20.0	44.4	8.5	2.50	.204	12.3	9.00	0	90	58	1,400	3	2.60	2.70
51	¾	27.0	21.9	48.9	9.3	2.60	.209	12.4	8.50	0	90	58	1,200	3	2.60	2.81
52	¾	27.0	21.9	48.9	9.3	2.60	.210	12.4	9.20	0	90	57	1,000	3	2.60	2.81

TABLE II-VIII.—*Log of carburetor tests, Columbia University, June to August, 1916*—Continued.

CARBURETOR NO. 3—Continued.

Run No.	Venturi meter. Size, inch.	Venturi meter. Left, inches.	Venturi meter. Right, inches.	Venturi meter. Height, inches water.	Venturi inlet, inches water.	Pounds air per minute.	Pounds gas per minute.	Ratio.	Pressure drop across carburetor, inches mercury.	Pressure in box.	Temperature, °F. Inlet to carburetor.	Temperature, °F. Outlet from carburetor.	Engine revolutions per minute.	Throttle opening No.	Level in float chamber, inches.	Total pounds mixture per minute.
53	¼	27.3	22.2	49.5	9.0	2.61	0.210	12.4	10.10	0	90	57	300	3	2.60	2.82
54	¼	27.5	22.6	50.1	9.2	2.63	.203	13.0	9.70	0	89	57	600	3	2.60	2.83
55	¼	20.3	16.6	36.9	7.2	2.32	.190	12.2	7.10	0	89	59	400	3	2.60	2.51
56	¼	11.1	8.4	18.5	4.2	1.74	.146	12.0	4.20	0	90	61	250	3	2.60	1.89
57	¼	4.1	3.7	7.8	1.8	2.54	.194	13.1	1.50	0	89	62	275	4	2.60	2.73
58	¼	7.3	7.1	14.4	3.0	3.42	.259	13.2	2.30	0	89	60	400	4	2.60	3.68
59	¼	14.0	14.2	28.2	5.7	4.62	.321	14.4	3.60	0	88	60	600	4	2.60	4.94
60	¼	8.3	19.2	37.5	6.0	5.29	.356	14.8	5.60	0	88	50	800	4	2.60	5.65
61	¼	16.5	16.8	33.3	6.1	4.99	.319	15.6	5.20	0	88	60	1,000	4	2.50	5.31
62	¼	19.1	19.8	38.9	7.3	5.35	.405	13.2	6.40	0	88	58	1,200	4	2.50	5.76
63	¼	19.7	20.5	40.2	7.6	5.48	.366	16.0	6.20	0	88	59	1,400	4	2.50	5.85
64	1	8.7	12.5	21.2	3.7	7.25	.444	16.3	3.40	0	88	60	1,410	5	2.60	7.69
65	1	8.3	11.8	20.1	3.2	7.00	.500	14.0	3.70	0	88	59	1,200	5	2.60	7.50
66	1	8.3	11.7	20.0	3.4	7.00	.447	15.7	3.40	0	88	60	1,000	5	2.50	7.46
67	1	7.3	10.6	17.9	3.4	6.68	.424	15.7	3.30	0	88	60	800	5	2.50	7.10
68	¼	21.4	15.3	36.7	6.8	5.20	.367	14.2	2.00	0	88	60	600	5	2.50	5.57
69	¼	12.5	6.8	19.3	3.9	3.91	.282	13.5	1.20	0	89	60	400	5	2.50	3.09
70	2	26.3	24.2	50.5	9.8	2.57	.227	11.3	1.00	0	89	60	300	5	2.60	2.80
71	1	8.3	11.8	20.1	3.5	7.00	.510	13.7	3.75	0	88	59	1,200	5	2.50	7.51

CARBURETOR No. 4.

[July 1, 1916; average barometer, 29.86 inches; gasoline, S. G., 0.7275.]

72	1	9.8	13.5	23.3	.....	7.55	0.490	13.4	2.60	0	84	56	1,000	Full.	1.50	8.04
73	¼	13.0	5.9	18.9	.....	3.86	.240	16.1	.70	0	86	59	410	Full.	1.70	4.10
74	¼	24.3	18.1	42.4	.....	5.55	.340	16.3	1.20	0	85	58	600	Full.	1.60	5.89
75	1	8.8	12.3	21.1	.....	7.22	.460	15.7	2.30	0	85	58	800	Full.	1.45	7.70
76	1	9.7	13.4	23.1	.....	7.52	.485	15.5	2.60	0	85	58	1,000	Full.	1.40	8.01
77	1	9.6	13.2	22.8	.....	7.50	.485	15.5	2.60	0	86	58	1,200	Full.	1.35	7.99
78	1	9.7	13.4	23.1	.....	7.52	.485	15.5	2.65	0	86	58	1,400	Full.	1.35	8.01

[July 3, 1916; average barometer, 29.49 inches.]

79	¼	3.1	4.6	7.7	2.2	1.19	0.064	18.6	12.4	0	88	59	1,200	2	1.80	1.25
80	¼	3.6	2.1	5.7	1.9	1.03	.051	20.0	13.9	0	90	62	1,000	2	1.80	1.08
81	¼	1.8	3.6	5.4	1.5	.95	.047	20.2	15.5	0	90	62	800	2	1.80	1.00
82	¼	2.1	3.8	5.9	1.7	.98	.053	18.4	15.5	0	90	62	600	2	1.80	1.03
83	¼	2.1	3.8	5.9	1.6	.93	.049	20.0	15.0	0	90	62	400	2	1.80	1.03
84	¼	2.1	3.8	5.9	1.6	.93	.048	20.7	12.8	0	90	63	320	2	1.75	1.03
85	¼	14.9	14.8	29.7	6.2	2.12	.139	15.3	11.3	0	88	58	1,200	3	1.70	2.25
86	¼	15.5	15.3	30.8	6.4	2.13	.138	15.4	12.1	0	88	58	1,000	3	1.65	2.27
87	¼	15.4	15.3	30.7	6.2	2.13	.136	15.7	12.0	0	89	59	800	3	1.70	2.27
88	¼	15.2	15.5	30.7	6.2	2.13	.137	15.6	12.0	0	89	59	600	3	1.70	2.27
89	¼	13.6	13.8	27.4	5.5	2.02	.133	15.2	9.8	0	90	60	420	3	1.70	2.15
90	¼	10.8	11.4	22.2	5.0	1.84	.133	13.8	7.0	0	90	62	320	3	1.70	1.97
91	¼	9.7	9.5	19.2	4.4	1.73	.102	16.9	8.3	0	82	57	305	3	1.75	1.83
92	¼	13.0	5.2	18.2	3.8	3.81	.227	16.8	8.9	0	89	61	1,200	4	1.65	4.04
93	¼	13.3	5.4	18.7	3.6	3.90	.230	16.9	9.4	0	90	62	1,000	4	1.65	4.13
94	¼	13.3	5.9	19.7	3.5	3.97	.234	16.3	9.9	0	90	60	800	4	1.65	4.20
95	¼	12.5	4.6	17.1	3.4	3.71	.222	16.7	7.9	0	90	61	600	4	1.65	4.02
96	¼	10.0	2.1	12.1	2.6	3.13	.188	16.7	4.5	0	91	62	420	4	1.65	3.32
97	¼	8.2	0.2	8.4	1.9	2.64	.165	16.0	2.3	0	91	64	330	4	1.65	2.81
98	¼	26.7	20.0	46.7	8.6	5.75	.343	16.8	6.2	0	91	62	1,200	5	1.50	6.09
99	¼	26.4	19.6	46.0	9.0	5.70	.357	16.0	6.2	0	92	62	1,000	5	1.50	6.06
100	¼	25.8	18.5	43.8	8.0	5.60	.347	16.2	5.7	0	92	64	800	5	1.50	5.95
101	¼	20.0	12.7	32.7	6.4	4.90	.290	16.8	4.0	0	93	65	600	5	1.50	5.19
102	¼	12.2	4.4	16.6	3.4	3.64	.226	16.1	1.9	0	94	65	420	5	1.60	3.87
103	¼	22.5	21.2	43.7	8.4	2.49	.171	14.6	1.0	0	93	65	280	5	1.60	2.66

TABLE II-VIII.—*Log of carburetor tests, Columbia University, June to August, 1916*—Continued.

CARBURETOR NO. 10.

[July 5, 1916; average barometer, 29.82 inches; gasoline, S. G., 0.7275.]

Run No.	Venturi meter. Size, inch.	Venturi meter. Left, inches.	Venturi meter. Right, inches.	Venturi meter. Height, inches water.	Pressure at Venturi inlet, inches water.	Pounds air per minute.	Pounds gas per minute.	Ratio.	Pressure drop across carburetor, inches mercury.	Pressure in box.	Temperature, °F. Inlet to carburetor.	Temperature, °F. Outlet from carburetor.	Engine revolutions per minute.	Throttle opening No.	Level in float chamber, inches.	Total pounds mixture per minute.
104	1	5.7	8.0	13.7	2.3	5.90	0.372	15.3	1.4	0	83	57	600	1	2.00	6.27
105	1	9.8	12.8	22.6	3.5	7.40	.465	15.9	2.2	0	84	57	800	1	1.95	7.87
106	1	10.5	13.5	24.0	3.9	7.63	.480	15.9	2.5	0	83	56	1,000	1	1.95	8.11
107	1	10.7	13.7	24.4	3.9	7.64	.490	15.6	2.5	0	82	56	1,200	1	1.95	8.13
108	¾	15.8	15.7	31.5	5.8	4.85	.266	18.2	.95	0	82	58	600	1	1.95	5.12
109	¾	10.7	10.3	21.0	4.2	4.07	.210	19.4	.70	0	82	58	400	1	2.00	4.28
110	¾	7.5	7.4	14.9	3.6	1.53	.080	19.1	.20	0	84	62	145	1	2.05	1.61
111	¾	17.0	14.6	31.6	5.8	2.15	.130	16.5	.35	0	83	60	220	1	2.10	2.28
112	¾	3.3	2.9	6.2	1.8	1.01	.058	17.4	12.8	0	86	58	270	2	2.10	1.07
113	¾	24.0	25.7	49.7	14.6	.545	.042	13.0	6.3	0	87	60	125	2	2.10	.59
114	¾	3.2	2.8	6.0	1.5	.985	.056	17.8	15.2	0	86	58	420	2	2.10	1.06
115	¾	6.6	5.7	12.3	3.1	1.40	.077	18.3	7.4	0	87	60	240	3	2.10	1.48
116	¾	8.2	7.1	15.3	3.5	1.55	.100	15.5	11.6	0	87	58	390	3	2.15	1.65
117	¾	9.2	7.9	17.1	3.9	1.64	.090	18.2	13.5	0	87	58	500	3	2.15	1.73
118	¾	9.2	8.0	17.2	3.9	1.64	.095	17.3	13.9	0	87	58	600	3	2.15	1.74
[July 6, 1916; average barometer, 29.99 inches.]																
119	¾	13.3	11.4	24.7	5.3	1.94	0.110	17.6	2.9	0	82	58	220	4	2.10	2.05
120	¾	26.0	22.1	48.1	9.0	2.59	.172	15.1	6.0	0	82	56	400	4	2.10	2.76
121	¾	6.0	5.2	11.2	2.6	3.16	.195	16.2	8.9	0	82	55	500	4	2.10	3.36
122	¾	7.0	6.2	13.2	2.8	3.25	.215	15.1	10.2	0	81	54	600	4	2.10	3.47
123	¾	7.3	6.5	13.8	2.8	3.35	.215	15.6	11.1	0	82	54	700	4	2.05	3.57
124	¾	7.5	6.7	14.2	2.9	3.39	.220	15.4	11.7	0	82	53	800	4	2.05	3.61
125	¾	7.3	6.5	13.8	2.8	3.33	.215	15.6	10.8	0	84	55	1,000	4	2.05	3.57
126	¾	15.3	14.9	30.8	5.6	4.80	.319	15.1	4.8	0	85	57	600	5	2.00	5.12
127	¾	11.8	11.1	22.9	4.6	4.25	.280	15.2	3.7	0	85	58	710	5	2.00	4.53
128	¾	7.1	6.4	13.5	3.2	3.30	.200	16.5	1.9	0	85	59	360	5	2.00	3.50
129	¾	19.5	19.5	39.0	7.0	5.33	.375	14.2	6.8	0	85	56	820	5	2.00	5.71
130	1	4.9	6.9	11.8	2.0	5.50	.370	14.9	6.8	0	84	56	900	5	2.00	5.87
131	1	4.2	6.1	10.3	1.9	5.15	.352	14.7	6.2	0	85	56	700	5	2.00	5.50

CARBURETOR NO. 2.

[July 10, 1916; average barometer, 29.92 inches; gasoline, S. G., 0.7275.]

132	¾	7.7	6.3	14.0	3.4	1.49	0.124	12.1	9.3	0	90	63	280	1	1.95	1.61
133	¾	9.0	7.5	16.5	4.0	1.61	.125	12.9	13.5	0	89	60	450	1	1.90	1.74
134	¾	9.3	7.7	17.0	4.0	1.64	.127	13.0	13.3	0	88	58	820	1	1.90	1.77
135	¾	9.3	7.7	17.0	4.0	1.64	.132	12.5	9.35	0	88	58	750	1	1.90	1.77
136	¾	9.1	7.6	16.7	4.0	1.63	.128	12.8	9.20	0	88	60	620	1	1.90	1.76
137	¾	9.0	7.5	16.5	3.9	1.62	.124	13.0	.....	0	89	61	620	1	1.90	1.74
138	¾	8.8	7.3	16.1	3.9	1.60	.125	12.8	13.4	0	89	61	750	1	1.90	1.73
139	¾	5.5	4.3	9.8	2.5	2.85	.311	9.2	1.1	0	88	60	295	2	1.90	3.16
140	¾	15.9	14.9	30.8	5.3	4.80	.375	12.8	1.7	0	88	64	550	2	1.85	5.18
141	¾	9.3	8.2	17.5	3.6	3.75	.348	10.8	1.35	0	88	63	420	2	1.90	4.10
142	1	7.6	9.8	17.4	2.9	6.60	.425	15.5	2.20	0	88	66	750	2	1.90	7.03
143	1	9.3	11.8	21.1	3.6	7.20	.436	16.5	2.40	0	88	66	930	2	1.90	7.64
144	1	9.4	11.9	21.3	3.6	7.20	.436	16.5	2.40	0	88	66	1,000	2	1.90	7.64
145	¾	16.6	14.2	30.8	6.6	2.14	.150	14.2	3.45	0	88	66	275	3	1.95	2.29
146	¾	5.7	4.5	10.2	2.3	2.87	.163	17.6	6.00	0	89	70	430	3	1.85	3.03
147	¾	7.7	6.5	14.2	3.2	3.38	.173	19.5	8.80	0	88	70	610	3	1.85	3.56
148	¾	8.6	7.5	16.1	3.5	3.60	.173	20.8	10.2	0	88	70	750	3	1.95	3.77
149	¾	8.6	7.5	16.1	3.5	3.60	.172	21.0	10.5	0	88	69	920	3	1.95	3.77
150	¾	4.7	3.4	8.1	2.0	2.59	.154	16.8	2.0	0	89	66	280	4	1.95	2.74
151	¾	8.5	7.4	15.9	3.5	3.58	.175	20.4	3.3	0	89	69	420	4	1.90	3.67
152	4	12.6	11.5	24.1	4.6	4.32	.186	23.2	4.4	0	88	70	570	4	1.90	4.51
153	4	16.9	16.2	33.1	6.1	4.99	.197	25.4	6.0	0	89	70	730	4	1.90	5.19
154	4	18.8	18.2	37.0	7.0	5.23	.202	25.9	6.8	0	89	70	900	4	1.90	5.43
155	4	18.6	18.1	36.7	7.7	5.22	.206	25.4	6.8	0	89	70	1,000	4	1.95	5.43
156	¾	21.4	18.3	39.7	7.7	2.39	.162	14.7	1.3	0	89	66	265	5	1.95	2.55
157	¾	9.2	8.0	17.2	3.7	3.72	.191	19.5	1.7	0	89	68	420	5	1.90	3.91
158	¾	17.5	17.0	34.5	6.3	5.10	.211	24.2	2.6	0	88	69	600	5	1.90	5.31
159	1	6.0	8.2	14.5	2.7	6.05	.223	27.2	9.1	0	88	70	750	5	1.90	6.27
160	1	7.7	10.0	17.7	3.0	6.68	.231	28.9	3.6	0	88	70	900	5	1.90	6.91
161	1	8.0	10.0	18.2	3.1	6.71	.234	28.7	3.7	0	88	70	1,000	5	1.90	6.94
162	1	8.0	10.2	18.2	3.1	6.71	.234	28.7	3.7	0	88	70	1,100	5	1.90	6.94

TABLE II–VIII.—*Log of carburetor tests, Columbia University, June to August, 1916*—Continued.

CARBURETOR NO. 7.

[July 11, 1916; barometer, 29.90 inches; gasoline, S.G., 0.7275.]

Run No.	Venturi meter. Size, inch.	Venturi meter. Left, inches.	Venturi meter. Right, inches.	Venturi meter. Height, inches water.	Venturi throat inlet, inches water.	Pounds air per minute.	Pounds gas per minute.	Ratio.	Pressure drop across carburetor, inches mercury.	Pressure in box.	Temperature, °F. Inlet to carburetor.	Temperature, °F. Outlet from carburetor.	Engine revolutions per minute.	Throttle opening No.	Level in float chamber, inches.	Total pounds mixture per minute.
163	1	8.3	10.4	18.7	3.2	6.84	0.517	13.2	3.0	0	87	64	830	1	0.95	7.36
164	1	8.6	10.8	19.4	3.2	6.93	.485	14.3	3.2	0	87	66	920	1	.95	7.42
165	1	9.1	11.4	20.6	3.4	7.10	.522	13.6	3.3	0	88	66	1,000	1	.95	7.62
166	1	9.0	11.3	20.3	3.4	7.10	.533	13.3	3.3	0	88	65	1,100	1	.90	7.63
167	1	8.8	11.1	19.9	3.3	7.00	.533	13.15	3.2	0	88	66	920	1	.95	7.53
168	1	5.4	7.2	12.6	2.1	5.64	.440	12.8	2.0	0	88	66	630	1	.95	6.08
169	¾	11.3	10.1	21.4	4.1	4.11	.320	12.75	1.1	0	88	66	430	1	.95	4.43
170	¾	5.5	4.2	9.7	2.3	2.84	.231	12.3	.55	0	88	66	260	1	.96	3.07
171	¾	5.6	4.7	10.3	2.8	1.28	.136	9.4	9.9	0	90	64	265	2	1.00	1.42
172	¾	6.1	5.1	11.2	2.9	1.33	.145	9.15	13.3	0	90	63	400	2	1.00	1.48
173	¾	6.4	5.4	11.8	3.2	1.38	.153	8.75	15.0	0	90	60	520	2	1.00	1.54
174	¾	6.4	5.4	11.8	3.2	1.36	.152	9.10	15.0	0	90	60	640	2	.95	1.53
175	¾	6.2	5.2	11.4	3.1	1.35	.148	9.15	14.0	0	90	60	810	2	1.00	1.50
176	¾	13.0	11.0	24.0	7.3	1.92	.214	8.33	4.7	0	90	65	260	3	1.00	2.13
177	¾	19.3	16.3	35.6	7.3	2.28	.240	9.50	7.9	0	90	63	390	3	.95	2.52
178	¾	24.9	21.2	46.1	9.0	2.54	.232	10.9	10.7	0	90	64	520	3	1.00	2.79
179	¾	5.4	4.1	9.5	2.3	2.81	.219	12.8	12.2	0	90	64	640	3	1.00	3.03
180	¾	5.6	4.3	9.9	2.3	2.84	.209	13.6	13.7	0	90	63	800	3	.95	3.05
181	¾	5.3	4.1	9.4	2.2	2.81	.236	11.9	12.4	0	90	63	1,000	3	.95	3.05
182	¾	5.3	4.0	9.3	2.1	2.80	.219	12.8	.4	0	92	68	270	4	1.00	3.02
183	¾	9.8	8.6	18.4	3.6	3.83	.296	13.4	.75	0	91	66	400	4	1.00	4.13
184	¾	15.9	15.1	31.0	5.8	4.35	.383	13.4	1.1	0	90	66	520	4	.95	4.21
185	¾	22.3	22.0	44.3	8.0	5.65	.432	13.1	1.7	0	90	66	630	4	.95	6.08
186	1	8.3	10.4	18.7	3.1	6.80	.500	13.6	2.2	0	90	66	750	4	.90	7.30
187	1	9.8	12.4	22.2	3.6	7.38	.563	13.1	2.6	0	90	66	900	4	.90	7.94
188	1	10.3	12.9	23.2	3.8	7.53	.518	13.0	2.7	0	90	66	1,000	4	.90	8.11
189	1	10.0	12.7	22.7	3.8	7.52	.578	13.0	2.7	0	91	66	1,100	4	.90	8.10
190	¾	20.8	17.5	38.3	7.7	2.35	.215	10.95	1.8	0	92	67	275	5	.95	2.57
191	¾	7.3	5.9	13.2	2.6	3.28	.271	12.10	3.2	0	92	67	400	5	.95	3.55
192	¾	11.0	9.9	20.9	4.3	4.07	.298	13.65	4.7	0	92	67	520	5	.95	4.37
193	¾	13.8	12.9	26.7	5.3	4.58	.334	13.75	6.4	0	92	66	650	5	.95	4.91
194	¾	16.8	15.5	31.8	6.2	4.88	.360	13.3	7.7	0	92	65	800	5	.90	5.25
195	¾	16.5	15.7	32.2	6.2	4.92	.368	13.4	8.0	0	92	64	.....	5	.90	5.29

CARBURETOR NO. 3.

[July 12, 1916; average barometer, 29.86 inches; gasoline, S. G, 0.7275.]

196	1	9.9	12.3	22.2	3.6	7.40	0.462	16.0	1.5	0	86	64	800	1	1.75	7.86
197	1	11.6	14.2	25.8	4.2	7.90	.500	15.8	1.6	0	86	64	920	1	1.80	8.40
198	1	11.9	14.6	26.5	4.3	8.00	.511	15.6	1.7	0	86	64	1,010	1	1.80	8.01
199	1	12.1	14.9	27.0	4.3	8.05	.518	15.5	1.7	0	86	64	1,100	1	1.80	8.57
200	1	12.4	15.1	27.5	4.3	8.13	.524	15.5	1.7	0	86	64	1,175	1	1.80	8.65
201	1	12.7	15.6	28.3	4.5	8.20	.533	15.9	1.7	0	86	64	1,400	1	1.80	8.73
202	1	14.3	17.5	31.8	5.2	8.65	.572	15.1	1.9	0	87	64	1,600	1	1.80	9.22
203	1	7.5	9.7	17.2	2.9	6.57	.418	15.7	1.3	0	88	66	720	1	1.80	6.09
204	1	5.2	7.0	12.2	2.1	5.56	.348	16.0	1.0	0	88	66	530	1	1.80	5.91
205	¾	12.1	10.7	22.8	4.6	4.25	.276	15.4	9.8	0	88	66	450	1	1.80	4.53
206	¾	18.8	14.0	33.0	6.5	2.22	.153	14.5	.8	0	88	67	230	1	1.80	2.37
207	¾	7.7	6.2	13.9	3.0	3.35	.233	14.4	.8	0	88	66	345	1	1.80	2.37
208	1	15.9	19.2	35.1	5.8	9.00	.600	15.0	2.1	0	88	64	1,800	1	1.80	3.60
209	¾	7.3	4.7	12.0	3.1	1.38	.078	17.7	13.8	0	89	66	420	2	1.80	1.46
210	¾	7.4	4.8	12.2	3.1	1.59	.081	17.2	15.0	0	90	66	570	2	1.80	1.47
211	¾	6.8	4.3	11.0	3.1	3.14	.074	18.1	12.0	0	90	68	360	2	1.80	1.42
212	¾	6.2	3.8	10.0	2.8	1.27	.067	19.0	8.8	0	90	69	240	2	1.80	1.34
213	¾	23.0	18.0	41.0	8.0	2.42	.177	13.7	5.7	0	90	67	370	3	1.80	2.59
214	¾	14.5	10.9	25.4	5.3	1.96	.132	14.8	3.4	0	90	68	250	3	1.80	2.09
215	¾	6.2	4.3	11.0	2.6	3.00	.205	14.6	8.8	0	90	66	510	3	1.80	3.20
216	¾	6.8	5.5	12.3	2.9	3.16	.214	14.1	10.8	0	90	64	650	3	1.80	3.37
217	¾	7.3	5.9	13.2	2.9	3.27	.222	14.7	11.9	0	90	64	830	3	1.80	3.49
218	¾	7.0	5.6	12.6	2.8	3.20	.218	14.7	11.1	0	90	64	1,000	3	1.80	3.42
219	¾	2.0	15.9	35.9	7.2	2.27	.154	14.7	1.5	0	90	68	250	4	1.80	2.42
220	¾	6.3	4.8	11.1	2.6	3.00	.202	14.9	2.0	0	90	68	350	4	1.80	3.20
221	¾	10.5	9.3	19.8	4.0	3.97	.276	14.4	2.4	0	91	68	426	4	1.80	4.25
222	¾	15.4	14.4	30.8	5.7	4.76	.324	14.7	6.4	0	91	65	700	4	1.80	5.08
223	½	11.5	16.5	34.0	6.4	5.04	.376	13.4	7.4	0	91	65	1,000	4	1.80	5.42
224	1	4.2	5.8	10.0	1.6	5.08	.329	15.4	8.1	0	92	.....	1,200	4	1.80	5.41
225	1	4.2	5.8	10.0	1.6	5.08	.328	15.4	8.1	0	92	.....	1,400	4	1.80	1.80
226	½	10.8	7.8	18.6	3.5	1.70	.104	16.4	6.3	0	92	68	255	5	1.80	1.81

TABLE II-VIII.—*Log of carburetor tests, Columbia University, June to August, 1916*—Continued.

CARBURETOR NO. 3—Continued.

Run No.	Venturi meter. Size, inch.	Venturi meter. Left, inches.	Venturi meter. Right, inches.	Venturi meter. Heights, inches water.	Pressure at Venturi inlet, inches water.	Pounds air per minute.	Pounds gas per minute.	Ratio.	Pressure drop across carburetor, inches mercury.	Pressure in box.	Temperature, °F. Inlet to carburetor.	Temperature, °F. Outlet from carburetor.	Engine revolutions per minute.	Throttle opening No.	Level in float chamber, inches.	Total pounds mixture per minute.
227	½	12.8	9.4	22.2	4.1	1.85	.120	15.4	8.5	0	92	68	330	5	1.80	1.97
228	½	14.2	10.7	24.9	4.5	1.94	.128	15.1	10.9	0	92	68	430	5	1.80	2.07
229	½	19.7	11.0	25.7	4.6	1.98	.131	15.0	13.0	0	92	67	530	5	1.80	2.11
230	½	15.2	11.5	26.7	4.7	2.02	.134	15.1	13.4	0	92	66	600	5	1.80	2.15
231	½	14.3	10.6	24.9	4.5	1.04	.125	15.5	13.25	0	92	66	730	5	1.80	2.07
232	¼	5.5	4.1	9.6	1.8	2.80	.185	15.1	10.1	0	94	68	530	5	1.80	2.96
233	¼	5.8	4.3	10.1	1.9	2.89	.192	15.0	11.2	0	93	66	630	5	1.80	3.08
234	¼	5.9	4.5	10.4	1.9	2.92	.192	15.2	11.4	0	93	66	710	5	1.80	3.11

CARBURETOR No. 6.

[July 13, 1916; average barometer, 29.80 inches; gasoline, S.G., 0.7275.

235	1	11.1	13.7	4.0	24.8	7.70	0.490	15.7	1.8	0	93	66	1,000	1	1.85	7.19
236	1	11.8	14.6	4.3	26.4	8.00	.485	16.5	1.8	0	93	66	1,200	1	1.90	8.49
237	1	13.0	15.9	4.8	28.9	8.30	.513	16.2	1.8	0	92	66	1,600	1	1.90	8.81
238	1	9.5	11.9	21.4	3.5	7.25	.494	16.3	1.5	0	92	66	800	1	1.90	7.59
239	1	5.3	7.0	12.3	3.8	5.70	.348	16.4	1.0	0	92	66	600	1	1.90	6.05
240	1	3.6	5.0	8.6	4.1	4.72	.296	16.0	.7	0	92	66	500	1	1.90	6.02
241	1	2.4	3.7	6.1	4.3	4.00	.243	16.4	.5	0	92	66	400	1	1.90	4.24
242	½	4.9	3.3	8.2	1.9	2.61	.182	14.3	.5	0	92	66	260	1	1.95	2.79
243	½	4.7	2.5	7.2	2.0	1.06	.064	16.9	10.5	0	93	66	220	2	1.90	1.14
244	½	4.9	2.6	7.5	2.0	1.10	.068	16.2	13.2	0	92	66	340	2	1.90	1.17
245	½	5.0	2.7	7.7	2.0	1.12	.068	16.5	14.4	0	93	66	420	2	1.90	1.19
246	½	7.7	5.1	12.8	3.3	1.42	.086	16.5	8.1	0	92	66	250	3	1.85	1.49
247	½	8.4	5.7	14.1	3.4	1.50	.095	15.8	9.9	0	92	66	320	3	1.85	1.60
248	½	9.7	6.7	16.4	3.9	1.50	.098	16.4	12.3	0	92	66	420	3	1.80	1.70
249	½	9.8	6.8	16.6	3.9	1.62	.098	16.5	13.3	0	92	66	520	3	1.80	1.72

[July 14, 1916; average barometer, 29.96 inches.]

250	½	13.2	9.5	23.7	4.8	1.86	0.121	15.3	11.5	0	86	61	420	4	1.85	1.98
251	½	11.3	8.0	10.3	4.3	1.73	.110	15.7	9.2	0	87	63	320	4	1.85	1.84
252	½	9.2	6.1	15.3	3.7	1.55	.094	16.5	6.3	0	87	64	220	4	1.85	1.65
253	½	14.0	10.2	24.2	5.2	1.92	.112	17.2	13.0	0	87	62	560	4	1.85	2.03
254	½	13.9	10.1	24.0	5.2	1.92	.125	15.3	12.8	0	88	60	720	4	1.85	2.05
255	½	14.0	10.2	24.2	5.2	1.92	.138	13.9	12.8	0	88	60	560	4	1.85	2.06
256	½	14.0	10.2	24.2	5.2	1.92	.136	14.1	12.8	0	88	60	560	4	1.85	2.06
257	¼	8.2	6.5	14.7	3.1	3.47	.233	14.9	8.8	0	87	60	560	5	1.90	3.70
258	¼	9.2	7.5	16.7	3.4	3.65	.240	15.2	10.5	0	88	59	720	5	1.90	3.89
259	¼	9.2	7.5	16.7	3.4	3.65	.246	14.9	10.5	0	88	59	920	5	1.90	3.90
260	¼	8.5	6.9	15.4	3.2	3.62	.250	14.1	9.5	0	88	59	1,100	5	1.90	3.77

[July 21, 1916.]

261	½	8.5	9.5	18.0	6.6	1.66	0.122	13.6	1.85	0	88	66	200	5	1.90	1.78
262	½	14.5	15.0	29.5	10.4	2.10	.140	15.0	3.00	0	88	66	250	5	1.90	2.24
263	½	19.4	19.3	38.7	7.4	2.35	.182	12.3	4.50	0	88	64	345	5	1.95	2.53
264	¼	7.3	5.0	12.3	6.5	3.13	.222	14.1	7.00	0	88	64	480	5	2.00	3.35
265	¼	7.6	5.3	12.9	6.5	3.28	.226	14.4	8.00	0	90	64	560	5	2.00	3.46
266	¼	5.6	3.3	8.9	6.9	2.38	.168	14.2	4.00	0	88	66	340	5	1.95	2.55
267	¼	4.0	1.7	5.7	7.2	2.18	.155	14.1	2.80	0	90	66	250	5	1.90	2.34
268	¼	6.7	4.4	11.2	6.9	3.00	.212	14.2	.60	0	90	66	290	1	2.00	3.21
269	¼	8.4	6.1	14.5	6.8	3.43	.248	13.8	.80	0	90	66	350	1	1.95	3.68
270	¼	13.8	11.6	25.4	6.0	4.42	.303	14.4	1.00	0	90	66	450	1	1.95	4.72
271	¼	21.8	20.1	41.9	7.5	5.50	.368	14.9	1.20	0	90	66	580	1	1.95	5.87

TABLE II-VIII.—*Log of carburetor tests, Columbia University, June to August, 1916*—Continued.

CARBURETOR NO 5.

[July 29, 1916; average barometer, 30.30 inches; gasoline, S. G., equals 0.7175.]

Run No.	Venturi meter. Size, inch.	Venturi meter. Left, inches.	Venturi meter. Right, inches.	Venturi meter. Height, inches, water.	Venturi inlet, inches water.	Pounds air per minute.	Pounds gas per minute.	Ratio.	Pressure drop across carburetor, inches mercury.	Pressure in box.	Temperature, °F. Inlet to carburetor.	Temperature, °F. Outlet from carburetor.	Engine revolutions per minute.	Throttle opening No.	Level in float chamber, inches.	Total pounds mixture per minute.
272	¼	12.5	15.5	28.0	5.8	2.07	0.113	18.3	1.00	0	78	58	310	1	2.15	2.18
273	¼	10.5	7.6	18.1	3.6	3.80	.198	19.2	1.00	0	78	53	390	1	2.15	4.00
274	¼	13.6	16.2	34.8	6.6	5.11	.284	18.02	1.20	0	78	53	540	1	2.15	5.39
275	1	9.0	9.8	18.8	3.2	6.82	.392	17.40	1.40	0	78	53	700	1	2.15	7.21
276	1	12.7	14.1	26.8	4.5	8.00	.487	16.45	1.70	0	80	53	880	1	2.15	8.49
277	1	13.1	14.6	27.7	5.4	8.15	.512	15.92	1.70	0	81	54	1,050	1	2.15	8.66
278	1	13.5	14.9	28.4	4.6	8.21	.527	15.70	1.70	0	81	55	1,250	1	2.15	8.80
279	¼	5.6	5.3	10.9	3.7	.377	.033	7.30	12.00	0	81	62	160	2	2.15	.313
280	¼	5.9	5.5	11.4	3.9	.282	.037	7.62	13.10	0	81	53	200	2	2.15	.319
281	¼	6.1	5.9	12.0	5.5	.290	.037	7.83	14.00	0	82	53	260	2	2.15	.327
282	¼	6.0	5.8	11.8	4.5	.288	.038	8.57	11.10	0	82	53	125	2	2.15	.324
283	¼	16.3	18.5	34.8	7.1	2.25	.138	16.32	1.00	0	82	56	240	3	2.15	2.39
284	¼	9.4	6.4	15.8	3.3	2.56	.183	18.97	1.10	0	82	54	380	3	2.15	3.75
285	¼	19.5	17.4	36.9	7.1	5.20	.299	17.40	1.20	0	82	55	550	3	2.15	5.50
286	1	9.3	10.1	19.4	3.2	6.92	.412	16.80	1.50	0	82	56	730	3	2.15	7.33
287	1	12.3	13.5	25.8	4.2	7.00	.502	15.76	1.70	0	82	56	900	3	2.15	8.40
288	1	12.5	13.9	26.4	4.2	8.00	.516	15.50	1.70	0	82	58	1,060	3	2.15	8.52
289	¼	10.3	7.6	17.9	3.7	3.77	.220	17.15	1.00	0	82	60	400	3	2.15	3.99
290	¼	10.5	13.8	24.3	5.3	1.94	.113	17.15	1.00	0	82	60	205	4	2.15	2.05
291	¼	18.0	15.5	33.5	6.4	5.00	.272	18.40	1.80	0	82	60	550	4	2.15	5.27
292	1	7.8	8.4	16.2	2.7	6.40	.377	16.98	2.50	0	82	60	740	4	2.15	6.77
293	1	9.7	10.5	20.2	3.3	7.08	.422	16.80	3.00	0	82	60	900	4	2.15	7.50
294	1	10.0	11.0	21.0	3.3	7.25	.440	16.47	3.10	0	84	60	1,000	4	2.15	7.69
295	¼	9.3	6.5	15.8	3.3	3.56	.184	19.30	1.30	0	84	64	380	4	2.15	3.74
296	¼	6.7	4.0	10.7	2.6	2.93	.158	18.52	1.20	0	84	60	300	4	2.15	3.09
297	1	10.1	11.1	21.1	3.4	7.26	.430	16.85	3.20	0	84	60	1,100	4	2.15	7.69
298	¼	8.8	12.3	21.1	4.6	1.82	.106	17.13	3.10	0	84	68	230	5	2.15	1.92
299	¼	14.7	17.2	31.2	6.4	2.16	.120	18.00	4.30	0	84	64	290	5	2.15	2.28
300	¼	19.8	21.6	41.4	8.0	2.43	.133	17.60	5.70	0	84	60	380	5	2.15	2.57
301	¼	6.8	4.0	10.8	2.3	2.94	.149	19.70	8.40	0	84	60	500	5	2.15	3.09
302	¼	7.3	4.5	11.8	2.6	3.12	.154	20.30	9.30	0	84	60	600	5	2.15	3.27
303	¼	7.7	4.8	12.5	2.8	3.18	.162	19.65	10.30	0	84	60	720	5	2.15	3.34
304	¼	4.0	8.1	12.1	3.1	1.39	.082	16.95	2.10	0	84	62	160	5	2.15	1.47
305	¼	4.8	8.9	13.7	3.3	1.47	.083	17.70	2.20	0	84	61	180	5	2.15	1.55
306	¼	5.0	9.0	14.0	3.4	1.50	.084	17.70	2.20	0	84	61	160	5	2.15	1.58
307	¼	0.5	5.2	5.7	1.5	.97	.056	17.30	1.30	0	84	61	80	5	2.15	1.03
308	¼	0.7	5.3	6.2	1.5	1.01	.061	16.05	1.40	0	84	61	100	5	2.15	1.07
309	¼	5.5	9.5	15.0	3.5	1.54	.081	17.30	2.30	0	84	65	165	5	2.15	1.63

CARBURETOR NO. 7.

[July 25, 1916; average barometer, 30.05 inches; gasoline, S. G., equals 0.683.]

310	1	6.9	7.6	14.5	2.4	6.06	0.472	12.85	7.8	0	82	48	700	1	------	6.53
311	1	7.8	8.8	16.6	2.7	6.40	.508	12.60	2.0	0	82	50	850	1	------	6.91
312	1	10.0	11.4	21.4	2.3	7.23	.533	12.40	2.8	0	82	50	1,000	1	------	7.81
313	1	10.4	11.7	22.1	3.5	7.38	.580	12.75	2.8	0	82	50	1,200	1	------	7.96
314	1	10.5	11.8	22.3	3.5	7.40	.580	12.75	2.7	0	82	49	1,300	1	------	7.98
315	¼	13.0	13.2	26.2	5.4	1.98	.192	10.30	.2	0	82	50	200	1	------	2.17
316	¼	6.4	3.8	10.2	3.0	2.00	.224	12.90	.5	0	82	50	300	1	------	3.12
317	¼	11.2	8.7	19.9	4.2	3.95	.307	12.90	1.0	0	82	50	400	1	------	4.26
318	¼	17.2	15.0	32.2	6.0	4.90	.372	13.20	1.4	0	82	48	550	1	------	5.27
319	1	7.0	7.8	14.8	2.5	6.08	.448	13.60	1.8	0	82	49	700	1	------	6.53
320	¼	5.0	2.5	7.5	2.5	2.50	.218	11.50	.2	0	82	50	250	1	------	2.72
321	¼	2.7	4.1	6.8	2.0	1.06	.096	11.10	10.7	0	82	65	220	2	------	1.16
322	¼	2.7	4.1	6.8	2.0	1.06	.099	10.70	18.5	0	82	51	300	2	------	1.16
323	¼	6.9	7.6	19.5	3.6	1.50	.171	8.50	5.1	0	82	53	------	3	------	1.67
324	¼	8.0	8.6	16.6	4.0	1.63	.157	10.40	5.0	0	82	56	220	3	------	1.79
325	¼	11.0	11.2	22.2	4.9	1.83	.153	12.10	7.2	0	82	56	300	3	------	2.00
326	½	12.0	12.3	24.3	5.3	1.92	.138	12.20	10.8	0	82	56	400	3	------	2.08

TABLE II-VIII.—*Log of carburetor tests, Columbia University, June to August, 1916*—Continued.

CARBURETOR NO. 7—Continued.

[July 26, 1916; average barometer, 29.97 inches; gasoline, S. G., equals 0.683.]

Run No.	Venturi meter. Size, inch.	Venturi meter. Left, inches.	Venturi meter. Right, inches.	Venturi meter. Height, inches water.	Pressure at Venturi inlet, inches water.	Pounds air per minute.	Pounds gas per minute.	Ratio.	Pressure drop across carburetor, inches mercury.	Pressure in box.	Temperature, °F. Inlet to carburetor.	Temperature, °F. Outlet from carburetor.	Engine revolutions per minute.	Throttle opening No.	Level in float chamber, inches.	Total pounds mixture per minute.
327	½	8.6	8.0	16.6	4.2	1.62	0.175	9.00	13.0	0	....	49	500	3	.....	1.80
328	½	10.3	10.6	20.9	4.5	1.80	.199	9.10	2.6	0	81	54	200	4	.....	2.00
329	½	16.3	16.0	32.3	6.5	2.20	.209	10.52	3.4	0	81	54	270	4	.....	2.4
330	½	5.9	3.2	9.1	3.0	2.75	.215	12.80	4.8	0	81	56	360	4	.....	2.9
331	½	7.7	5.1	12.8	2.8	3.23	.234	12.12	7.5	0	82	57	420	4	.....	3.48
332	½	8.4	5.7	14.1	3.0	3.40	.239	14.30	9.9	0	83	56	820	4	.....	3.64
333	½	7.0	4.5	11.5	2.5	3.07	.219	14.02	12.4	0	83	56	820	4	.....	3.29
334	½	7.0	4.5	11.5	2.5	3.07	.214	14.35	9.2	0	83	57	1,000	4	.....	3.28
335	½	4.4	1.9	6.3	1.5	2.30	.198	11.62	1.2	0	84	57	230	5	.....	2.50
336	½	7.7	5.1	12.8	2.8	3.22	.243	13.25	2.7	0	85	57	390	5	.....	3.46
337	½	13.1	10.5	23.6	4.6	4.28	.297	14.43	4.8	0	85	58	550	5	.....	4.58
338	½	15.8	13.5	29.3	5.6	4.77	.332	14.40	6.7	0	85	58	700	5	.....	5.10
339	½	16.1	13.8	30.0	6.7	4.77	.336	14.22	6.6	0	85	58	920	5	.....	5.11
340	½	16.2	13.9	30.1	5.6	4.77	.336	14.22	6.6	0	85	58	1,000	5	.....	5.11

CARBURETOR NO. 3.

[Gasoline, S. G., 0.683.]

341	½	12.7	13.0	25.7	5.5	1.92	0.132	14.57	0.80	0	83	57	210	1	.....	2.05
342	½	9.6	7.0	16.6	3.2	3.63	.242	15.00	.80	0	84	55	380	1	.....	3.87
343	½	15.8	13.5	29.3	5.7	4.75	.300	15.82	.80	0	84	55	500	1	.....	5.05
344	1	8.7	9.8	18.5	3.0	6.80	.404	16.80	1.10	0	84	55	700	1	.....	7.20
345	1	13.1	13.7	25.8	4.1	7.97	.488	16.30	1.30	0	84	52	000	1	.....	8.46
346	1	13.1	14.8	27.9	4.4	8.20	.523	15.70	.30	0	85	56	1,140	1	.....	8.72
347	1	13.4	15.2	28.6	4.6	8.35	.528	15.70	1.30	0	86	54	1,300	1	.....	8.88
348	½	9.3	10.0	19.3	4.5	1.75	.112	15.60	3.50	0	85	63	225	2	.....	1.86
349	½	15.1	14.9	30.0	6.2	2.12	.144	14.72	5.60	0	85	61	320	2	.....	2.26
350	½	24.3	22.0	46.2	8.7	2.53	.181	14.00	9.00	0	85	58	450	2	.....	2.71
351	½	6.0	3.4	0.4	2.0	2.80	.190	14.71	10.40	0	84	57	580	2	.....	2.99
352	½	6.2	3.7	10.0	2.3	2.88	.194	14.87	11.40	0	84	57	700	2	.....	3.07
353	½	6.3	3.7	9.9	2.2	2.88	.200	14.40	10.90	0	85	57	880	7	.....	3.08
354	½	6.4	3.8	10.2	2.2	2.90	.197	14.73	10.90	0	85	57	880	2	.....	3.10
355	½	15.1	14.8	29.9	6.3	2.12	.147	14.42	.65	0	85	60	240	3	.....	2.27
356	½	11.7	9.1	20.8	4.0	4.07	.206	15.30	.75	0	85	60	440	3	.....	4.34
357	½	19.5	18.0	37.0	7.2	5.25	.338	15.50	1.00	0	85	52	580	3	.....	5.59
358	1	9.0	10.0	19.0	3.1	6.78	.432	15.70	1.30	0	85	51	750	3	.....	7.21
359	1	11.6	13.0	24.6	4.0	7.70	.482	16.00	1.45	0	86	51	900	3	.....	8.18
360	1	12.2	13.8	26.0	4.2	7.85	.443	15.84	1.50	0	87	53	1,100	3	.....	8.35
361	1	12.8	14.5	27.3	4.5	7.95	.506	19.70	1.50	0	87	52	.....	3	.....	8.46

[July 27, 1916; average barometer, 29.86 inches; gasoline, S. G., 0.683.]

362	1	9.0	10.2	19.2	3.2	6.90	0.415	16.60	1.0	0	81	55	740	1	.....	7.32
363	1	11.5	12.7	24.2	3.9	7.70	.464	16.62	1.2	0	81	52	880	1	.....	8.16
364	½	13.0	12.8	25.8	5.3	1.98	.135	14.65	1.2	0	81	60	213	4	.....	2.12
365	½	8.0	5.3	13.3	.....	3.32	.236	14.10	2.0	0	81	60	380	4	.....	3.56
366	½	14.4	12.0	26.4	5.0	4.50	.322	14.00	3.5	0	81	59	840	4	.....	4.82
367	½	21.5	19.8	41.3	7.6	5.46	.375	14.84	4.8	0	81	59	750	4	.....	5.83
368	1	6.4	7.1	13.5	2.2	5.83	.371	15.72	5.7	0	83	60	1,031	4	.....	6.20
369	1	6.5	7.2	13.7	2.2	5.90	.374	15.75	5.9	0	83	60	940	4	.....	6.07
370	½	3.6	4.8	8.3	4.0	1.16	.109	10.65	3.0	0	82	65	200	5	.....	1.27
371	½	16.8	16.2	33.0	7.7	2.20	.163	13.50	6.0	0	82	65	350	5	.....	2.36
372	½	16.5	3.7	10.2	2.5	2.89	.200	14.43	8.9	0	82	59	530	5	.....	3.09
373	½	7.0	4.3	11.3	2.5	3.04	.203	14.61	11.2	0	82	58	730	5	.....	3.25
374	½	6.6	4.0	10.6	2.2	2.95	.203	14.80	10.2	0	82	58	930	5	.....	3.16

TABLE II-VIII.—*Log of carburetor tests, Columbia University, June to August, 1916*—Continued.

CARBURETOR NO. 5.

[July 28, 1916; average barometer, 30.25 inches; gasoline, S. G., 0.683.]

Run No.	Venturi meter. Size, inch.	Venturi meter. Left, inches.	Venturi meter. Right, inches.	Venturi meter. Height, inches water.	Pressure at Venturi inlet, inches water.	Pounds air per minute.	Pounds gas per minute.	Ratio.	Pressure drop across carburetor, inches mercury.	Pressure in box.	Temperature, °F. Inlet to carburetor.	Temperature, °F. Outlet from carburetor.	Engine revolutions per minute.	Throttle opening No.	Level in float chamber, inches.	Total pounds mixture per minute.
375	¾	15.9	15.5	31.4	6.4	2.16	0.124	17.4	1.00	0	80	42	230	1	2.4	2.28
376	¾	9.2	6.3	15.5	2.7	3.55	.200	17.8	1.00	0	80	42	370	1	2.4	3.75
377	¾	17.6	15.5	33.1	5.8	4.06	.304	16.3	1.00	0	80	42	500	1	2.4	5.26
378	1	8.5	9.3	17.8	2.9	6.70	.397	15.86	1.20	0	81	38	700	1	2.3	7.10
379	1	12.0	13.4	25.4	3.9	7.80	.487	16.00	1.50	0	81	38	860	1	2.3	8.29
380	1	13.2	14.7	27.9	4.7	8.17	.552	14.55	1.60	0	82	38	1,040	1	2.3	8.73
381	1	13.3	15.0	28.3	4.7	8.27	.543	15.20	1.55	0	82	38	1,130	1	2.3	8.81
382	1	13.0	14.6	27.6	4.5	8.15	.543	14.80	1.60	0	83	38	1,330	1	2.3	8.69
383	1	7.8	8.6	16.4	2.6	6.50	.380	16.85	1.20	0	83	38	700	1	2.3	6.88
384	1	12.8	14.3	27.1	4.3	8.13	.558	14.56	1.60	0	83	38	1,040	1	2.3	8.69
385	¾	16.4	14.1	30.5	5.7	4.80	.287	10.75	1.00	0	82	38	500	1	2.3	5.09
386	¼	6.0	6.0	12.0	4.0	.289	.035	8.23	11.7	0	81	50	175	2	2.3	.323
387	¼	7.0	6.8	13.8	4.5	.308	.033	9.64	13.9	0	80	50	235	2	2.3	.341
388	¼	4.8	4.4	9.2	3.3	.255	.043	5.94	13.9	0	80	50	285	2	2.3	.298
389	¼	3.3	2.5	5.3	2.1	.204	.040	5.10	14.8	0	80	52	390	2	2.3	.244
390	¼	4.9	3.2	7.2	2.6	.227	.040	5.56	14.3	0	80	49	245	2	2.3	.267
391	¼	5.0	4.5	9.5	3.3	.260	.047	5.53	9.7	0	80	49	120	2	2.3	.307
392	¼	4.0	4.0	8.0	3.3	.238	.046	5.17	13.2	0	80	49	180	2	2.3	.284
393	¾	10.5	7.8	18.3	3.7	4.51	.322	19.90	1.0	0	82	40	400	3	2.3	4.840
394	¾	12.5	15.6	28.1	5.7	2.07	.134	15.55	.9	0	81	45	225	3	2.3	2.200
395	¾	22.7	21.2	43.9	8.2	5.60	.372	16.10	1.15	0	81	42	600	3	2.3	5.970
396	1	8.2	9.0	17.2	2.8	6.57	.408	16.11	1.35	0	82	42	700	3	2.3	6.98
397	1	10.3	11.4	21.7	3.4	7.26	.462	15.70	1.50	0	83	44	820	3	2.3	7.71
398	1	11.6	13.0	24.6	3.8	7.68	.498	15.42	1.60	0	83	44	900	3	2.3	8.18
399	1	12.2	13.6	25.8	4.2	7.90	.514	15.40	1.60	0	84	45	1,000	3	2.3	8.41
400	1	12.5	13.9	26.4	4.3	8.00	.528	15.15	1.70	0	84	46	1,100	3	2.3	8.53
401	1	12.8	14.3	27.1	4.5	8.00	.535	14.95	1.70	0	84	46	1,240	3	2.3	8.54
402	1	12.7	14.2	26.9	4.5	8.00	.545	14.66	1.60	0	84	44	1,300	3	2.3	8.55
403	¾	9.5	6.9	16.4	3.3	3.62	.207	17.50	1.00	0	84	44	380	3	2.3	3.83
404	¾	10.2	7.6	17.8	3.8	3.75	.228	16.47	1.00	0	83	43	400	3	2.3	3.98
405	¾	10.0	11.0	25.0	4.8	4.37	.262	16.70	1.00	0	84	40	480	3	2.3	4.63
406	¾	22.1	20.5	42.6	7.7	5.53	.332	16.67	1.20	0	84	40	610	3	2.3	5.86
407	¾	8.6	12.0	20.6	4.6	1.37	.112	12.23	1.00	0	84	50	200	4	2.3	1.48
408	¾	9.3	6.6	15.9	3.3	3.58	.200	17.80	1.30	0	84	48	380	4	2.3	3.78
409	¾	16.5	14.2	30.7	5.7	4.82	.278	17.35	1.80	0	84	47	520	4	2.3	5.10
410	¾	21.3	19.2	40.5	7.7	5.40	.307	17.60	2.15	0	84	46	620	4	2.3	5.71
411	1	7.0	7.7	14.7	2.3	6.08	.357	17.06	2.50	0	84	46	700	4	2.3	6.44
412	1	9.2	10.2	19.4	3.3	6.95	.430	16.15	2.95	0	84	46	860	4	2.3	7.18
413	1	9.7	10.9	20.6	3.3	7.10	.450	15.78	3.00	0	84	50	980	4	2.3	7.38
414	1	9.7	10.8	20.5	3.3	7.10	.433	16.40	3.10	0	84	50	1,100	4	2.3	7.56
415	¼	10.2	13.7	23.7	5.6	1.92	.123	15.60	1.00	0	84	52	205	4	2.3	2.04
416	¼	6.2	3.4	9.6	2.0	2.80	.169	16.57	1.10	0	84	52	300	4	2.3	2.97
417	¼	9.1	6.5	15.6	3.4	3.58	.206	17.40	1.40	0	84	51	380	4	2.3	3.78
418	¼	6.4	10.0	16.0	3.8	1.58	.097	16.28	2.60	0	84	60	210	5	2.3	1.68
419	¼	4.0	8.3	12.3	2.9	1.40	.082	17.05	2.00	0	84	54	165	5	2.3	1.48
420	¼	14.5	17.5	32.0	6.4	2.18	.141	15.48	4.60	0	84	51	305	5	2.3	2.32
421	¼	5.5	3.8	10.3	3.3	2.90	.159	18.25	6.90	0	84	52	450	5	2.3	3.06
422	¼	6.8	4.1	10.9	2.4	2.98	.163	18.30	9.50	0	84	54	560	5	2.3	3.14
423	¼	7.2	4.4	11.6	2.4	3.05	.170	17.95	10.40	0	84	58	680	5	2.3	3.22
424	¼	7.0	4.4	11.4	2.5	3.05	.181	16.85	10.60	0	84	56	850	5	2.3	3.23
425	¼	20.0	21.7	41.7	8.3	2.43	.146	16.70	6.30	0	84	56	380	5	2.3	2.58
426	¼	7.1	4.3	11.4	2.5	3.05	.173	17.65	10.50	0	84	56	1,000	5	2.3	3.22

CARBURETOR NO. 4.

[July 31, 1916; average barometer, 29.85 inches; gasoline, S. G., 0.683.]

427	¼	15.8	18.2	34.0	7.0	2.24	0.154	14.55	0	0	86	54	230	1	.....	2.39
428	¼	11.7	8.7	30.4	4.1	4.05	.244	16.60	.4	0	86	56	400	1	.....	4.29
429	¼	22.5	20.2	42.7	8.4	5.60	.334	16.75	1.0	0	86	52	580	1	.....	5.93
430	1	10.3	11.4	21.7	3.3	7.23	.451	15.78	2.0	0	88	55	840	1	.....	7.74
431	¼	11.0	8.3	19.3	3.7	3.97	.244	16.30	.4	0	88	55	400	1	.....	4.21
432	1	11.4	12.4	23.3	3.7	7.00	.477	15.90	2.2	0	88	58	940	1	.....	8.08
433	1	11.7	12.8	24.5	3.8	7.70	.488	15.75	2.5	0	88	56	1,070	1	.....	8.19
434	1	11.7	12.9	24.6	3.8	7.70	.497	15.50	2.5	0	88	56	1,240	1	.....	8.20
435	1	7.6	8.3	15.9	2.7	5.31	.383	16.50	1.2	0	88	56	680	1	.....	6.69
436	¼	8.0	5.1	13.1	2.6	3.27	.215	15.20	.3	0	88	56	310	1	.....	3.49
437	¼	5.0	9.0	14.0	3.3	1.48	.114	13.00	3.3	0	88	60	195	2	.....	1.59
438	¼	8.1	11.7	19.8	4.5	1.75	.128	13.67	6.6	0	88	60	295	2	.....	1.88

TABLE II-VIII.—*Log of carburetor tests, Columbia University, June to August, 1916*—Continued.

CARBURETOR No. 4—Continued.

Run No.	Venturi meter. Size, inch.	Venturi meter. Left, inches.	Venturi meter. Right, inches.	Venturi meter. Height, inches water.	Venturi inches Pressure at inlet, water.	Pounds air per minute.	Pounds gas per minute.	Ratio.	Pressure drop across carburetor, inches mercury.	Pressure in box.	Temperature, °F. Inlet to carburetor.	Temperature, °F. Outlet from carburetor.	Engine revolutions per minute.	Throttle opening No.	Level in float chamber, inches.	Total pounds mixture per minute.
439	¼	11.8	15.0	26.8	5.7	2.02	0.144	14.03	10.4	0	88	62	420	2	.....	2.16
440	¼	11.9	15.0	26.9	5.7	2.03	.142	14.27	12.3	0	88	59	530	2	.....	2.17
441	¼	11.7	14.9	26.6	5.7	2.01	.143	14.05	12.3	0	89	58	700	2	.....	2.15
442	¼	12.0	14.8	26.8	5.8	2.02	.134	15.10	11.9	0	89	58	880	2	.....	2.15
443	¼	12.0	15.0	27.0	5.7	2.03	.131	15.50	11.3	0	89	59	990	2	.....	2.16
444	¼	12.0	15.0	27.0	5.8	2.03	.138	14.70	10.6	0	89	59	1,100	2	.....	2.17
445	¼	5.0	2.0	7.0	1.6	2.42	.161	15.02	0	0	88	54	240	3	.....	2.58
446	¼	7.8	5.0	12.8	2.7	3.16	.208	15.20	.4	0	88	54	330	3	.....	3.37
447	¼	11.0	8.2	19.2	3.7	3.88	.245	15.85	.6	0	88	52	400	3	.....	4.13
448	¼	17.8	15.6	33.4	6.3	5.00	.311	16.10	1.0	0	89	55	520	3	.....	5.31
449	1	6.8	7.3	14.1	2.2	5.98	.366	16.35	1.5	0	89	55	650	3	.....	6.35
450	1	8.6	9.3	17.9	2.9	6.68	.413	16.20	2.0	0	89	57	760	3	.....	1.09
451	1	10.3	11.3	21.6	3.7	7.26	.458	15.87	2.5	0	89	58	900	3	.....	7.72
452	1	11.0	12.0	23.0	3.9	7.50	.472	15.90	2.6	0	89	57	1,090	3	.....	7.97
453	1	11.0	12.0	23.0	4.0	7.50	.480	15.61	2.7	0	89	57	1,250	3	.....	7.98
454	¼	4.6	1.6	6.2	1.6	2.28	.147	15.50	.4	0	89	58	220	4	.....	2.43
455	¼	7.3	4.5	11.8	2.6	3.10	.194	16.00	.8	0	89	57	325	4	.....	3.29
456	¼	10.8	8.0	18.8	2.7	3.86	.240	16.07	1.2	0	90	57	410	4	.....	4.10
457	¼	17.5	15.0	32.5	6.2	4.97	.300	16.51	2.1	0	90	57	540	4	.....	5.27
458	1	7.3	7.9	15.2	2.5	6.20	.379	16.35	3.4	0	91	61	760	4	.....	6.58
459	1	7.0	7.6	14.6	2.3	6.10	.381	16.00	3.4	0	91	61	760	4	.....	6.48
460	1	8.0	8.7	16.7	2.8	6.50	.389	16.62	3.9	0	90	60	910	4	.....	6.89
461	1	8.5	9.2	17.7	3.1	6.68	.407	16.41	4.2	0	90	59	1,020	4	.....	7.09
462	1	8.3	9.0	17.3	3.0	6.97	.408	16.02	4.3	0	90	61	1,120	4	.....	6.91
463	¼	20.0	17.5	37.5	7.2	5.26	.328	16.00	2.5	0	91	61	640	4	.....	5.39
464	¼	11.3	14.5	25.8	5.4	1.97	.141	13.97	1.0	0	92	66	230	5	.....	2.11
465	¼	6.0	3.1	9.1	2.0	2.74	.176	15.56	2.0	0	92	62	310	5	.....	2.92
466	¼	7.4	4.7	12.1	2.5	3.12	.197	15.82	2.5	0	92	62	390	5	.....	3.08
467	¼	11.5	9.0	20.0	4.3	4.01	.249	16.15	4.4	0	92	63	500	5	.....	4.27
468	¼	14.0	11.2	25.2	5.0	4.40	.269	16.39	6.6	0	92	63	610	5	.....	4.68
469	¼	15.2	12.6	27.8	5.4	4.60	.275	16.72	6.1	0	92	63	720	5	.....	4.80
470	¼	16.4	14.1	30.5	5.8	4.80	.295	16.26	7.5	0	92	63	850	5	.....	5.17
471	¼	15.7	13.3	29.0	5.6	4.69	.283	16.52	6.0	0	92	63	1,000	5	.....	4.96
472	¼	15.6	13.0	28.6	5.9	4.67	.290	16.20	6.5	0	92	65	1,110	5	.....	4.92

CARBURETOR NO. 9.

[Aug. 1, 1916; average barometer, 29.96 inches; gasoline, S. G., 0.683.]

473	½	0.6	5.0	5.6	1.0	0.960	0.079	12.15	10.7	0	87	48	220	2	.....	1.04
474	½	.5	4.8	5.3	1.5	.940	.079	11.90	10.15	0	86	46	320	2	.....	1.01
475	½	.4	4.7	5.1	1.4	.920	.080	11.50	15.20	0	86	46	400	2	.....	1.00
476	¼	18.7	19.8	38.5	11.7	.493	.065	7.60	9.0	0	86	48	170	2	.....	.66
477	¼	18.5	20.0	38.5	11.5	.493	.061	8.08	7.4	0	86	50	140	2	.....	.65
478	¼	8.9	12.2	21.1	4.6	1.85	.172	10.76	1.3	0	87	44	210	1	.....	2.02
479	¼	7.5	4.5	12.0	1.6	3.11	.240	12.95	1.7	0	88	45	340	1	.....	3.35
480	¼	12.8	10.0	22.8	4.7	4.21	.314	13.40	2.1	0	90	45	450	1	.....	4.52
481	¼	18.6	16.3	34.8	6.6	5.09	.354	14.38	2.2	0	90	45	560	1	.....	5.44
482	1	6.8	7.2	14.0	2.5	5.95	.388	15.35	2.6	0	91	48	680	1	.....	6.34
483	1	9.1	9.9	19.0	3.3	6.88	.430	16.40	2.9	0	92	50	840	1	.....	7.31
484	½	6.9	10.3	16.9	4.0	1.63	.174	9.38	1.2	0	92	48	180	1	.....	1.80
485	1	9.5	10.2	19.7	3.3	7.00	.450	15.55	3.0	0	94	50	960	1	.....	7.45
486	1	9.9	10.7	20.6	3.4	7.10	.445	15.95	3.1	0	94	53	1,070	1	.....	7.55
487	1	11.0	11.7	22.7	3.6	7.50	.455	16.65	3.3	0	96	56	1,240	1	.....	7.96
488	½	11.1	14.0	25.1	5.7	1.95	.186	10.50	1.5	0	92	51	220	3	.....	2.14
489	¼	7.6	4.6	12.2	2.6	3.13	.261	12.00	1.7	0	92	46	350	3	.....	3.39
490	¼	13.2	10.5	23.7	4.6	4.20	.342	12.03	2.2	0	93	47	480	3	.....	4.63
491	¼	18.8	16.9	35.2	6.7	5.10	.388	13.15	2.6	0	94	48	600	3	.....	5.49
492	1	7.3	7.8	15.1	2.6	6.17	.430	14.35	2.9	0	94	48	720	3	.....	6.60
493	½	5.6	9.2	14.8	3.4	1.53	.179	8.60	1.3	0	94	51	175	3	.....	1.71
494	1	9.0	9.7	18.7	3.0	6.80	.422	16.11	2.9	0	94	51	850	3	.....	7.22
495	1	10.0	10.8	20.8	3.6	1.18	.453	15.92	3.2	0	97	50	980	3	.....	7.63
496	1	10.0	10.8	20.8	3.4	7.18	.462	15.55	3.2	0	98	51	1,090	3	.....	7.64
497	1	10.2	11.1	21.1	3.4	7.20	.463	15.56	3.4	0	98	52	1,260	3	.....	7.66
498	½	10.0	13.0	23.0	5.1	1.87	.181	10.33	1.6	0	96	54	205	4	.....	2.05
499	¼	24.5	25.2	49.7	9.6	2.62	.240	10.91	2.1	0	94	47	310	4	.....	2.86
500	¼	12.5	9.8	22.3	4.3	4.18	.330	12.67	2.9	0	95	50	490	4	.....	4.51
501	¼	17.8	15.3	33.1	6.3	5.00	.373	13.43	3.5	0	96	50	600	4	.....	5.37
502	1	6.0	6.4	12.4	2.2	5.60	.396	14.15	3.8	0	97	49	700	4	.....	6.00
503	1	7.3	7.8	15.1	2.5	6.20	.400	15.50	4.6	0	98	52	880	4	.....	6.60
504	1	7.3	7.9	15.2	2.5	6.21	.430	14.43	4.4	0	98	58	1,000	4	.....	6.64
505	1	7.6	8.0	15.6	2.6	6.23	.430	14.50	4.6	0	98	54	1,130	4	.....	6.66

TABLE II-VIII.—*Log of carburetor tests, Columbia University, June to August, 1916*—Continued.

CARBURETOR NO. 9—Continued.

[Aug. 2, 1916; barometer, 30.17 inches; gasoline, S. G., 0.683.]

Run No.	Venturi meter.				Venturi inlet, inches water.	Pounds air per minute.	Pounds gas per minute.	Ratio.	Pressure drop across carburetor, inches mercury.	Pressure in box.	Temperature, °F.		Engine revolutions per minute.	Throttle opening No.	Level in float chamber, inches.	Total pounds mixture per minute.
	Size, inch.	Left, inches.	Right, inches.	Height, inches water.							Inlet to carburetor.	Outlet from carburetor.				
506	¼	5.7	9.2	14.9	3.4	1.55	0.175	8.85	2.1	0	80	46	190	5	.....	1.73
507	¼	11.5	14.0	25.5	5.7	1.97	.189	10.42	5.8	0	80	45	300	5	.....	2.16
508	¼	1.8	5.7	7.5	1.9	1.10	.125	8.80	1.3	0	81	44	110	5	.....	1.23
509	¼	10.6	13.4	24.0	5.2	1.92	.131	10.60	3.5	0	82	45	240	5	.....	2.10
510	¼	6.0	9.5	15.5	3.7	1.57	.139	11.30	9.5	0	82	45	350	5	.....	1.71
511	¼	7.0	10.3	17.3	4.2	1.66	.135	2.00	9.5	0	82	46	350	5	.....	1.85

By means of a stop watch the time required to consume a definite weight of fuel was determined, and the run was continued until three consecutive readings showed the flow to be steady and the rate of flow constant.

In general each carburetor was tested for five different throttle positions, including idling and full throttle, and at a sufficient number of engine speeds at each throttle position. Whenever the readings showed that the *critical pressure* had been reached, so that an increase in engine speed would not produce an increase of flow, the throttle was changed to its next position. In each case the lowest speed was the minimum speed at which the dynamometer could be operated.

All carburetors were tested with standard gasoline of 62.5° Baumé, and a number of them also with gasoline of 75° Baumé. The former was bought from the Standard Oil Co., and the latter was obtained from the American Oil Works, Titusville, Pa.

The following carburetors, all modern compensating forms, were very kindly loaned by their makers for the purpose of these tests when requested through the National Automobile Chamber of Commerce, but the trade names are suppressed for obvious reasons.

Mark No.	Diameter of outlet.	New class.	Mark No.	Diameter of outlet.	New class.
	Inches.			*Inches.*	
1	1 11/16	13.5	6	1 3/4	14.1
2	(?)	13.4	7	1 1/4	8.2
3	1 3/8	12.5	8	1 7/8	12.7
4	1 1/16	6.5	9	1 11/16	10.9
5	1 3/8	12.5	10	1 11/16	9.2

It had been the intention to test two other makes of carburetors, but, although promised by the makers, delivery was not made.

It is most important that the results of these tests be not misinterpreted, and it must be emphasized again that the tests should not be considered in any way as competitive. In the first place, only one feature of each carburetor was brought out, namely, the accuracy of the proportioning of the mixture at different flow rates, and this does not throw any light on the intimacy or homogeneity of the

mixture, its density, or its degree of dryness. But even with respect to proportions the results should be quoted or considered only in so far as they tend to reveal the characteristics of the variations from constancy with reference to flow rate for the general sort of carburetor under study. No attempt was made to improve the performance of each carburetor after the object stated had been attained. For instance, where a carburetor has separate adjustments for each throttle position, as in one well-known type, the adjustments were not continued after the plotted curves of the results had shown plainly what might and what might not be effected by further adjustment. In the same way, where the auxiliary air supply is regulated by spring-loaded valves, no attempt was made to find the effect of different springs or spring tensions, since it is well known what effect a lighter or heavier spring or a change in the initial tension will produce.

Furthermore, since all carburetors showed an appreciable variation in the proportions of the mixture under widely varying conditions it is not important that the whole proportionality range of one is lower than the whole range of another over the same range of flow rates. Obviously the flow rate range is a matter of option in use.

Where a carburetor has an independent arrangement for idling controlled by the throttle position or the vacuum above the throttle, so that it really consists of two distinct carburetors with separate jets, the idling mixture was not very carefully adjusted, since this is a manual operation and its result quite independent of the automatic compensations over the working ranges of flow rates. Whenever an individual result was obtained that seemed inconsistent the run was repeated, and errors in calculations or readings were thus quickly found out and eliminated during the progress of the test. Under these conditions and considering the methods and apparatus used the final results should be correct within 1 per cent.

The proportionality results for each carburetor have beeen plotted in three different ways:

(A) Ratio of air to gasoline by weight as ordinates, plotted against total weight of mixture as abscissæ, designated by the letter "A," on the curve sheets.

(B) Same ordinates as in the previous case, plotted against the total pressure drop across carburetor as abscissæ, designated by the letter "B," on the curve sheets.

(C) Weight of gasoline as ordinates, plotted against weight of air as abscissæ, designated by the letter "C," on the curve sheets.

Where two kinds of gasoline were used sheets marked A_1 and A_2 and C_1 and C_2 will be found, the subscript 1 denoting the heavier fuel and 2 the lighter. B was plotted only for the heavier fuel, since it does not help the understanding very much; so B only will be found.

The throttle positions are marked by numbers. (See any A or B sheet.) These numbers were assigned for convenience only and give no indication as to the degree of throttle opening. By means of these numbers and the corresponding symbols the points of a group can be kept together and recognized; also it will be easy to find the corresponding reading on the log sheets where the same numbers are used.

On the C sheets no numbers are used, and the points of any one group have simply been given a characteristic mark, which does not necessarily agree with the symbols of the same group on the A and B sheets. Since the C curve has only been used to give an idea of the general nature of the mean curve of all results, this discrepancy, which was discovered too late, does not matter.

It should also be noted that where two tests were run on one carburetor no attempt was made to test it with exactly the same throttle position in both cases. Since the tests had to be run on different days and the carburetor was removed from the box between the two tests, and because in some throttle positions even the very slightest motion of the throttle will affect the flow considerably, the same throttle positions could not have been reproduced without a very accurate system of marking, which would have required too much time.

The individual points had at first been combined into smooth curves, representing mean values, but this method was abandoned, since it appeared, first, that it in no way helped the understanding, and, second, because in some cases results were so erratic that they could not fairly be represented by smooth curves. Accordingly the test points are joined by straight lines on the curve sheets.

On inspecting the curves it will be oberved that the relation A and B make the irregularities appear far more conspicuous than the relation C. The latter is the one most commonly used in reports on carburetor tests, which is rather peculiar, since it does not give to the eye a striking picture of one of the main characteristics of the carburetor, namely, proportionality, and tends to obscure its variations.

Constancy of proportion of gasoline to air will in each case be represented by straight lines, these being in the relations A and B horizontal lines, and in C inclined and passing through the origin. The relation C has the advantage that its curve furnishes the best means of quickly deducing the equation representing flow of air, which is important when the performance of a carburetor is to be investigated in the light of the rational or empirical flow laws. It, however, does not convey an accurate idea of the fluctuation in the mixture proportions, since naturally a very much smaller scale has to be adopted for the gasoline than for the air. In this report the gasoline scale on sheets C is only one-tenth that of the air scale. It must also be remarked that in all the reports of carburetor tests that have been found in the literature of the subject present curves of the relation of C only, and individual points are generally suppressed in favor of a smooth curve. In the light of these new test results this older practice seems improper, because it suppresses the very facts that should form the basis or object of the test.

Each carburetor in turn is described briefly and its test results reported in curve form without elaborate discussion. A photograph of the instrument and a sectional or phantom view of its construction will serve to identify the device, full description of which may be found in the trade literature by those not already familiar with it from personal observation or use.

Carburetor No. 1.—This carburetor has a fuel needle valve controlled by an automatic spring-loaded secondary air-inlet valve with a fixed primary air inlet and is therefore a representative of the new

subclass 13.5. It is illustrated in figure 6, and the results of the test are given in curve form in figures 7, 8, and 9, which represent, respectively, the relations A, B, and C. Reference to the curves A on figure 7 shows that—

(*a*) The mixture gets leaner as the flow rate increases, or that the fuel increases faster than the air.

(*b*) Neglecting the idling points where the ratio of air to fuel is about 9, the ratio varies from 10.3 to 13.1 over the working range between 2 and 9 pounds of mixture per minute approximately, which is 24 per cent on the mean ratio of 11.7.

(*c*) For a given flow rate the mixture is not the same for different tests as shown by the disposition of points on a given vertical line, but in general this variation is not very large.

(*d*) There are certain irregularities for which the only explanation that can be found is irregular mechanical action or sticking of the moving parts, the automatic valve, the fuel needle valve, or lost motion in the linkage.

Reference to the curve sheet B, figure 8, indicates that on idling the pressure drop through the carburetor, which is, of course, the vacuum in the intake manifold, varied from 11.5 to 14.5 inches of mercury, and over the working range noted above from 0.8 to 9.7 inches of mercury. Finally, reference to figure 9, the plot of relations C, giving the fuel weight with reference to air weight, shows far less clearly the variations in proportion that really exist than does figure 7, the plot of relations A, which gives the ratio of air to fuel directly as a function of mixture flow rate.

The curves could have been made to change in shape or curvature by a change of spring or spring tension, but there is no indication that a straight line would result or that the irregularities would disappear.

Observations of the level in the float chamber showed that it varied 0.55 inch over the flow range, which is large in proportion to the height of the fuel nozzle above the mean level and must account for some of the variations.

Carburetor No. 2 (fig. 10).—In the carburetor the fuel needle valve is throttle controlled by a link connection, and air enters partly through a fixed primary and partly through an automatic spring-loaded valved secondary inlet, so that it may be regarded as an example of the new subclass 13.4. An interesting comparison becomes possible between the results of this and those of carburetor No. 1, because the two devices are, in general, similar in all respects except for the needle-valve control, which is here throttle actuated and in the previous case moved by the automatic secondary air valve. It has already been pointed out that the throttle position is not a prime variable in flow while automatic air-valve movement may be and is so, the more nearly it controls all the air and the more nearly constant its spring tension. This being the case, more variation from constancy would be expected in this carburetor than in the last one for variation of flow rates, due to changes of engine speed with a fixed throttle. With such a fixed throttle any changes in flow rate act on proportions in just the same way as would be the case with a fixed fuel inlet associated with fixed primary and automatic secondary air inlets. If the compensation for such a combination were adequate, there would be

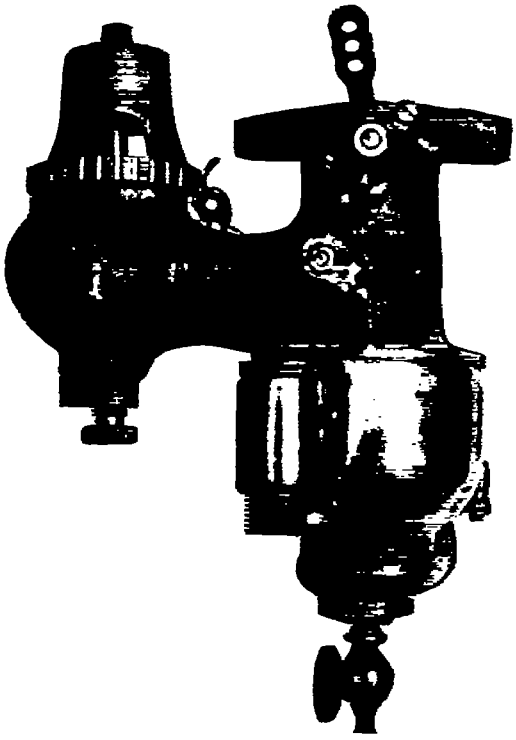

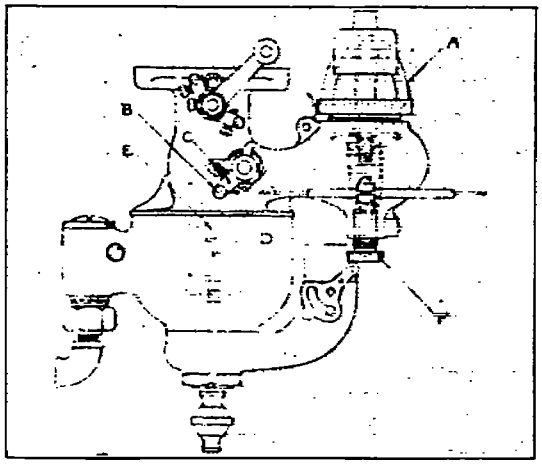

FIG. 6.—Carburetor No. 1.

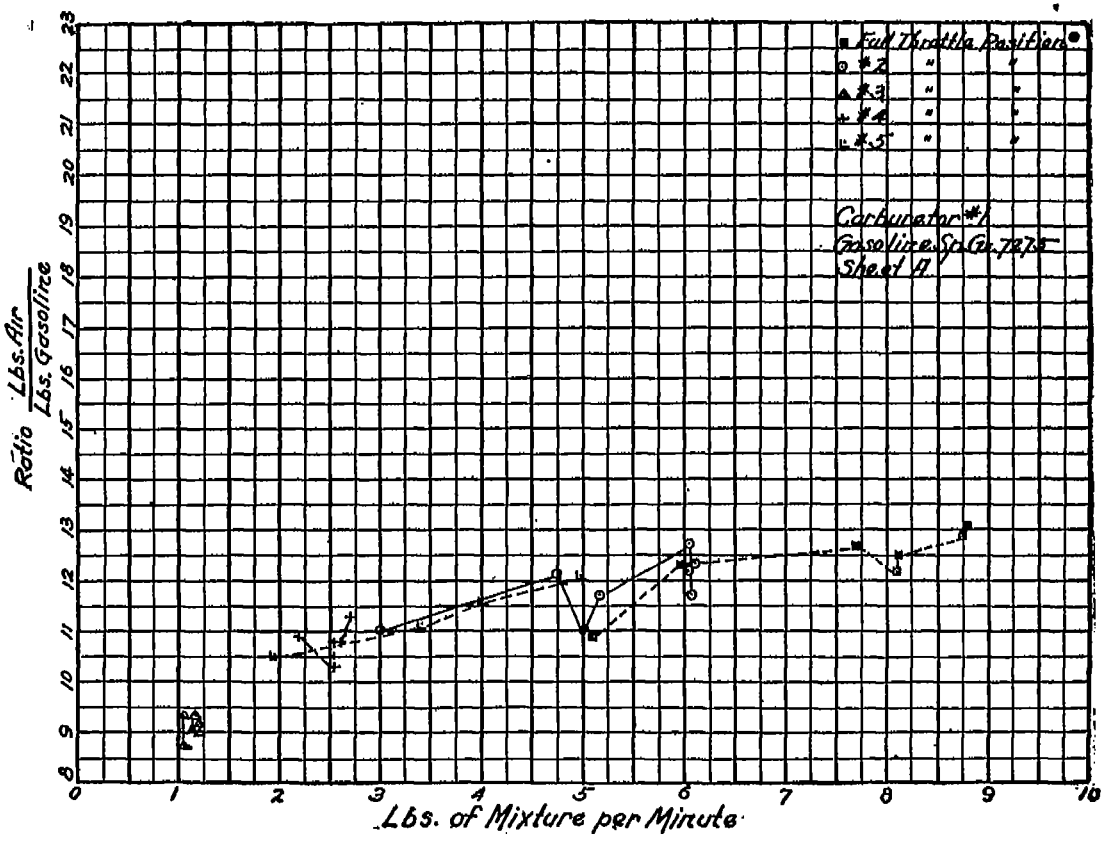
Full Throttle Position
#2
#3
#4
#5
Carburator #1
Gasoline Sp. Gr. .7275
Sheet A
Ratio Lbs. Air / Lbs. Gasoline
Lbs. of Mixture per Minute
0
1
2
3
4
5
6
7
8
9
10
8
9
10
11
12
13
14
15
16
17
18
19
20
21
22
23

Fig. 7.

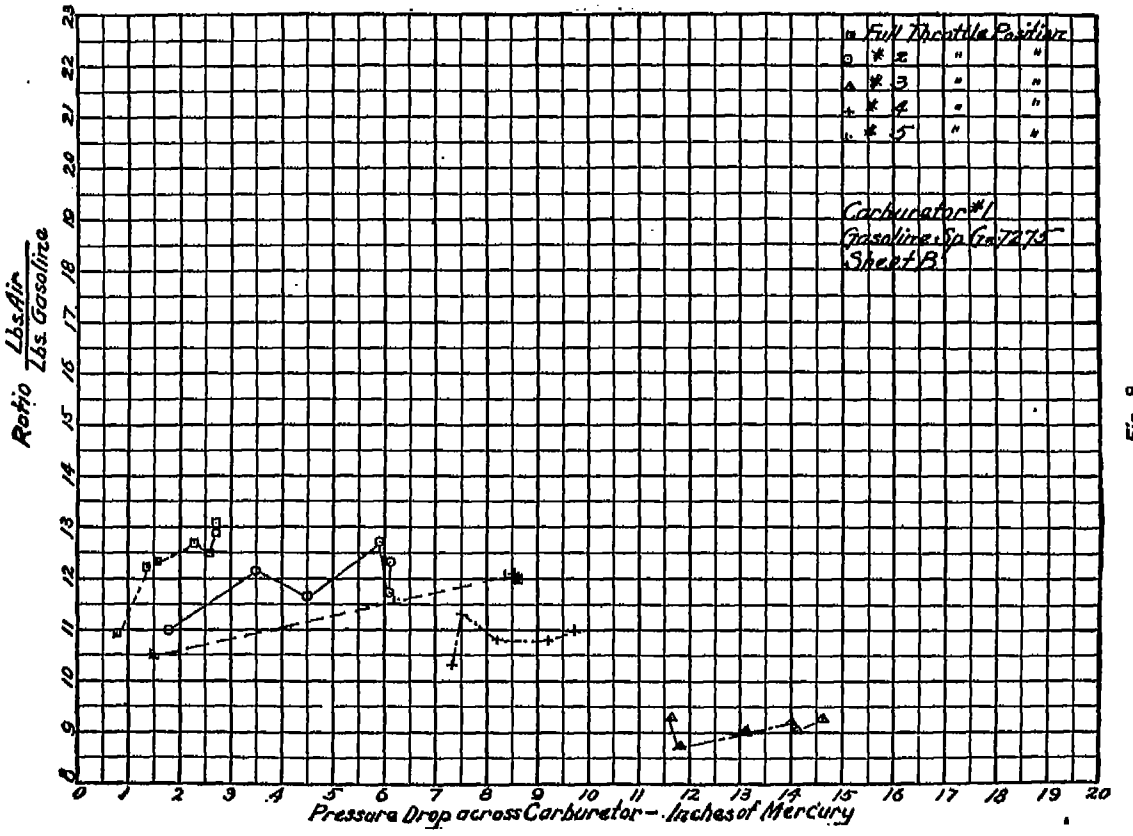
Full Throttle Position
#2 "
#3 "
#4 "
#5 "
Carburetor #1
Gasoline Sp. Gr. .7275
Sheet B
Ratio Lbs. Air / Lbs. Gasoline
Pressure Drop across Carburetor – Inches of Mercury

Fig. 8.

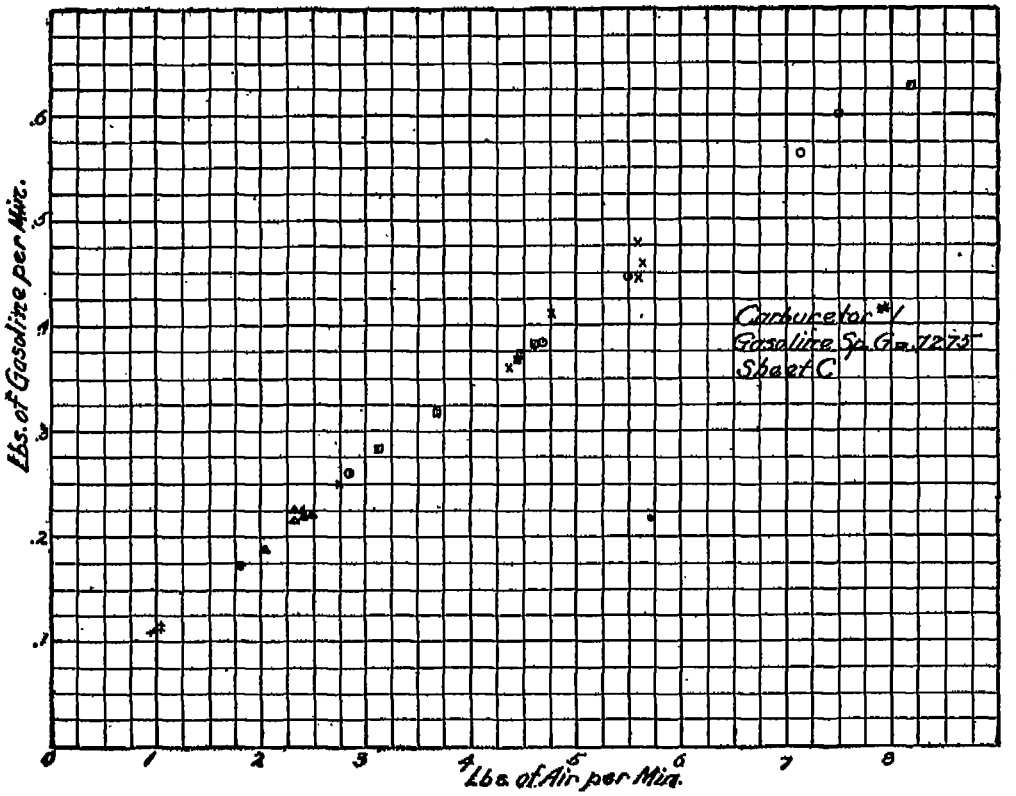
Lbs. of Gasoline per Min.
.1
.2
.3
.4
.5
.6
0
1
2
3
4
5
6
7
8
Lbs. of Air per Min.
Carburetor #1
Gasoline Sp. G. = .7275
Sheet C

Fig. 8.

no object in adding the second compensator, which is out of action when the throttle is fixed.

Reference to the curves of air to fuel ratio with respect to mixture flow rate, the A relation given in figure 11 leads to the following conclusions:

(*a*) The proportions vary widely in passing from one throttle position to another for a given flow rate along a vertical line. For example, at a mixture flow rate of 7 pounds per minute the air to fuel ratio varies from 15.4 to about 29, nearly 100 per cent in passing from No. 2 to No. 5 throttle position. While manual adjustment of the cam connection between needle and throttle may be relied upon to reduce this, there is no reason to believe that the difference can ever be reduced to zero.

(*b*) The proportions vary also over a very wide range with any fixed throttle position as the flow rate changes with engine speed as is clear from the rising trend of all the curves. For example, the ratio for throttle position No. 5, and flow rate 2.5 pounds per minute is about 14.5, which increases to 29 for a flow rate of 7 pounds per minutes with the same throttle position. This is exactly double, or 100 per cent of the lower value and 67 per cent of the mean ratio of 21.75. Hand adjustment of the automatic air-valve spring tension will, of course, tend to flatten these curves, but it is not likely that they can by this means ever be brought to horizontal lines.

(*c*) The curves are all smooth and the irregularity noted for carburetor No. 1 is absent, which confirms the opinion that these irregularities were due to sticking or lost motion of the air valve or its curvatures. In the present case the air valve is free and the needle linkage is positively actuated by the manual movement of the throttle. Reference to the pressure drop curves (fig. 12) will give the pressure drop or header vacuum corresponding to the several flow-rate and throttle-position points or the proportions corresponding to them. As in the previous case the direct relation of fuel to air weights of figure 13 clearly fails to bring out the departures from constancy of proportion as well as the curve of ratio with respect to rate of flow. (Fig. 11.)

The level in the float chamber varied by not more than 0.1 inch for all flow rates, a negligible quantity when compared with the suction produced by the air flow. (See fig. 13.)

Carburetor No. 3 (fig. 14).—In this carburetor, which has a single air inlet only, a vertical cylindrical plunger, with its axis normal to the center line of the horizontal air passage, tends, by gravity, to choke the air. This is counteracted by the pressure on the upper side of the plunger, which—due to a small connecting passage—is identical with the pressure of the air or mixture after it has been throttled by the plunger. The plunger carries at its lower end the fuel metering pin, a cylindrical rod with a tapering groove cut into it. The metering pin dips into the cylindrical fuel aspirating tube, the end of which extends into the air passage, and which may be shifted up and down, thus providing for a hand adjustment.

The carburetor, therefore, belongs to new subclass 12.5.

Figures 15 and 16 show the air-gasoline ratio versus flow rate for five different throttle positions, figure 15 for 62.5° B. gasoline,

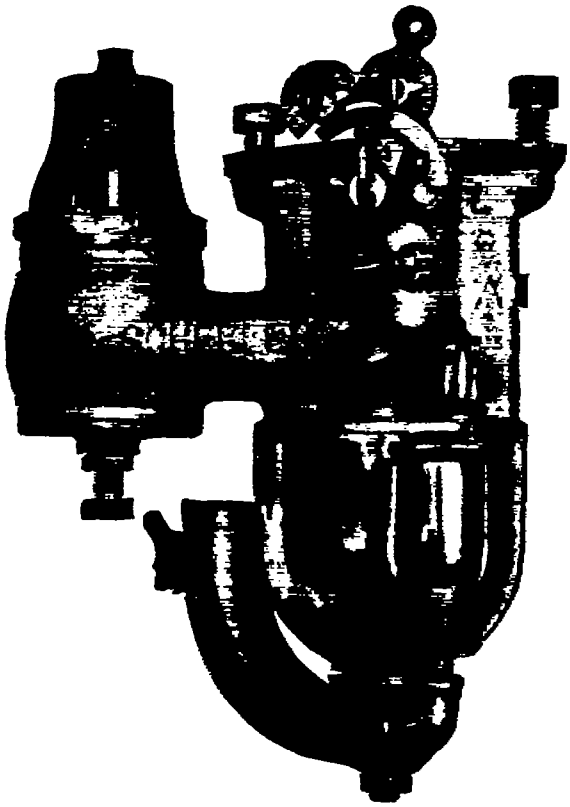

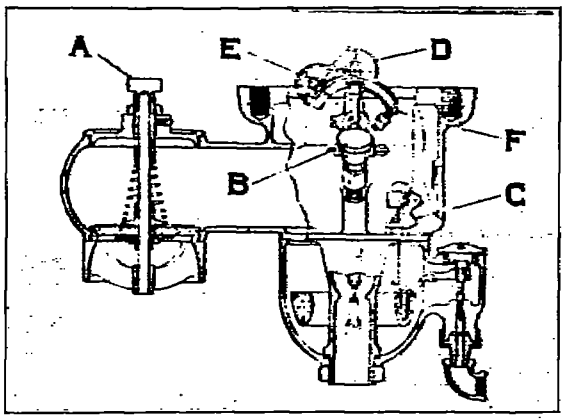

FIG. 10.—Carburetor No. 2.

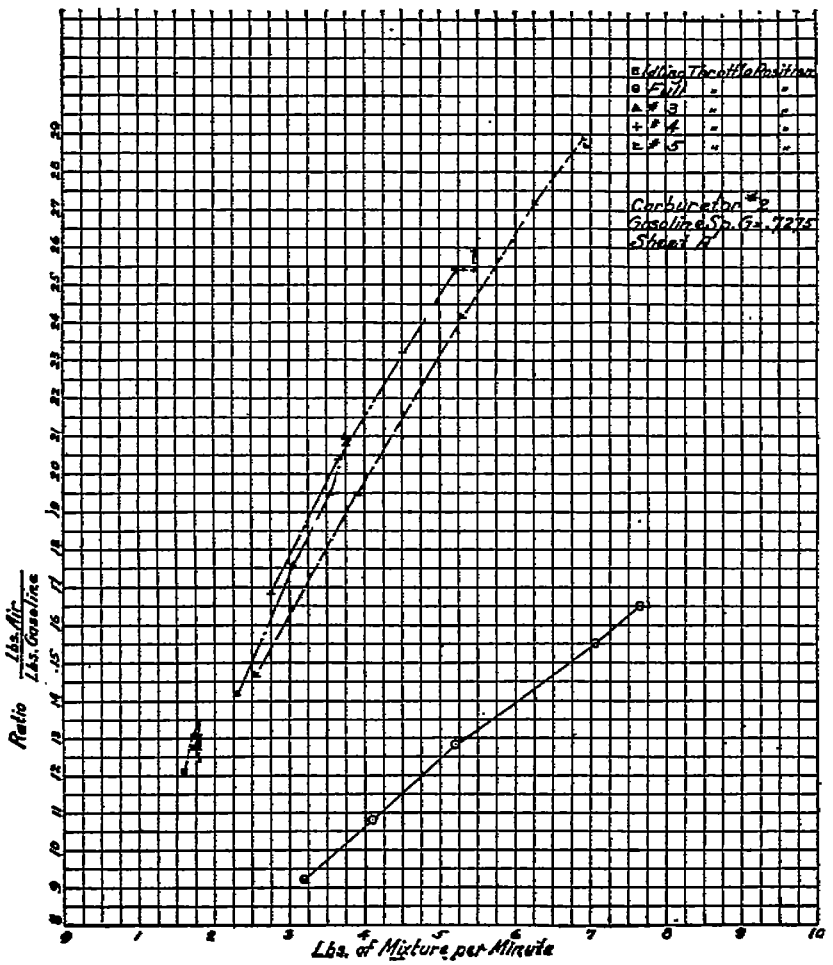
Idling Throttle Position
Full " "
3 " "
4 " "
5 " "
Carburetor #2
Gasoline Sp. G. = .7275
Sheet A
Ratio Lbs. Air / Lbs. Gasoline
Lbs. of Mixture per Minute

Fig. 11.

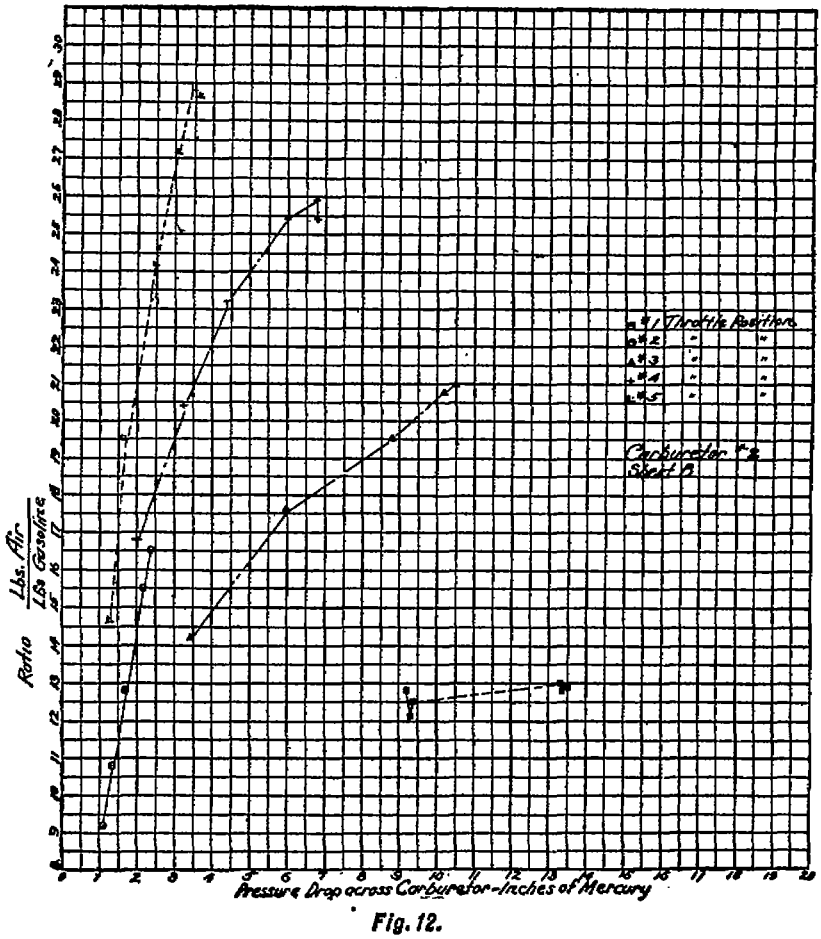
Ratio Lbs. Air / Lbs. Gasoline
Pressure Drop across Carburetor-Inches of Mercury
#1 Throttle Position
#2 "
#3 "
#4 "
#5 "
Carburetor #2
Sheet B

Fig. 12.

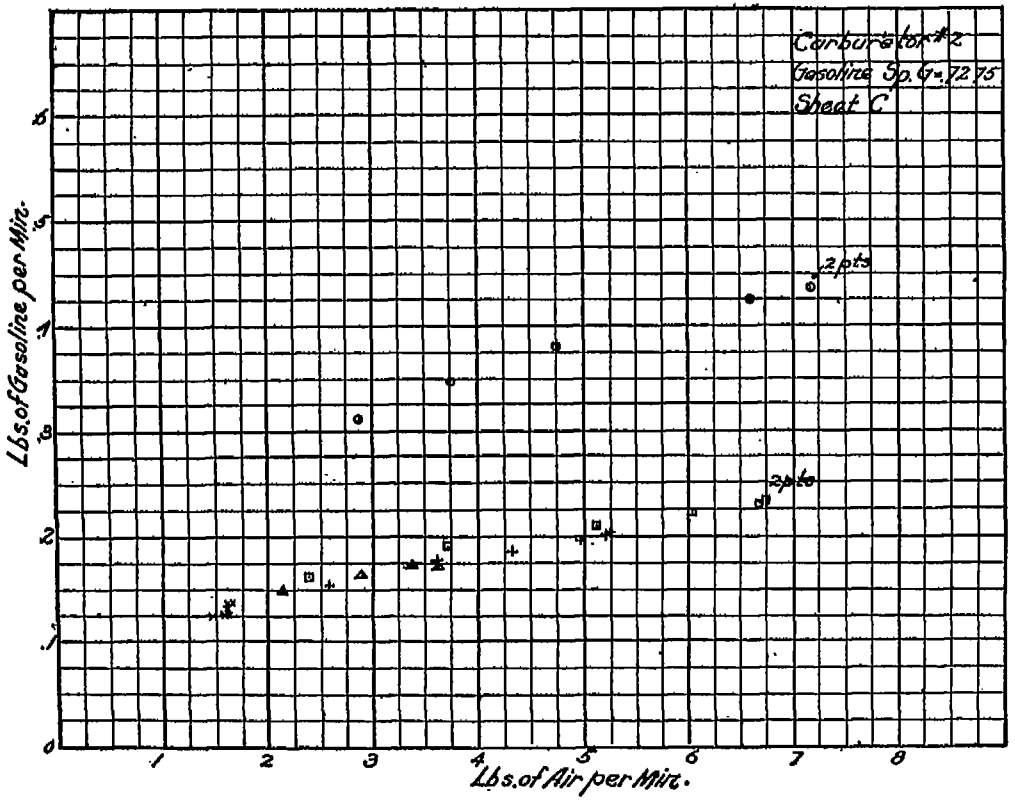
Carburetor No 2
Gasoline Sp. G=.7275
Sheet C
2 pts
2 pts
Lbs. of Gasoline per Min.
Lbs. of Air per Min.
0
.1
.2
.3
.4
.5
.6
1
2
3
4
5
6
7
8

Fig. 18.

and figure 16 for 75° B. gasoline, or sheets A and A_2, respectively. An inspection of these curves gives the following results:

(*a*) From A, as well as A_2, it is seen that the maximum capacity of the carburetor should be taken as slightly more than 8.2 pounds of mixture per minute. This evidently represents the point where the plunger has risen as far as it can, and therefore ceases to regulate, and the carburetor becomes a fixed fuel-flow area, fixed air-flow area instrument. Consequently the mixture tends to become richer. Points beyond 8.2 pounds per minute of mixture will therefore not be considered.

(*b*) On A points of group No. 2 to represent the idling position of the throttle. Evidently the aspirating effect at the mouth of the nozzle is insufficient at such for flow rates. It is a general practice to use a very rich mixture when idling, but the carburetor shows just the opposite, a very much leaner mixture than for higher flow rates.

(*c*) Leaving out the idling position, the mixture on both A and A_2 is seen to become gradually leaner as the flow increases, and the air-gasoline ratio increases on A, from an average of about 14.5 to about 15.9, on A_2 from about 14.6 to approximately 16.2. This corresponds to mean values of 15.2 and 15.4, respectively, or the total variation in *average* ratios amounts to 9.2 per cent and 10.4 per cent, respectively, of the mean ratios.

(*d*) The discussion under (*b*) referred to average ratios. If, however, extreme values, low and high, are taken, A shows a range from 13.4 to 16.4, leaving out idling positions, and on A_2 from 10.6 to 16.8. True, this large variation is due to a few erratic readings, but there is no apparent reason why these readings should be thrown out. They are evidently due to the sticking of the plunger.

(*e*) The gradual increase in the air-gasoline ratio, as the flow increases, could be corrected by a change in the contours of either the tapering groove in the metering pin, or of the V-shaped bottom of the plunger, if the curves are to be flattened out.

Curve sheet B (fig. 17) will be discussed, in conjunction with the B curves of all the other carburetors, at the end of the test report.

Figure 18 again proves that this method of representation fails to give to the eye a true picture of the irregularities of the operation, although it shows the nature of the equation representing the relation between air flow and fuel flow.

The variation in the float-chamber level was less than 0.1 inch, i. e., negligible.

Carburetor No. 4 (fig. 20).—In this carburetor the attempt is made by combining two carburetors one of which has a rising ratio versus flow curve and one with a drooping curve, so as by the simultaneous action to produce a horizontal ratio versus flow curve, i. e., a mixture of constant proportions. Or by accentuating the action of one component as compared with the other any desired tendency might theoretically be produced.

The carburetor has no moving parts whatever and adjustments of the mixture can only be made by exchanging nozzles or Venturi sections, excepting the idling device, which is independent of the rest of the carburetor and capable of adjustment.

A single air inlet is provided and two fixed fuel nozzles; the flow through one of the latter is controlled by the vacuum at its mouth,

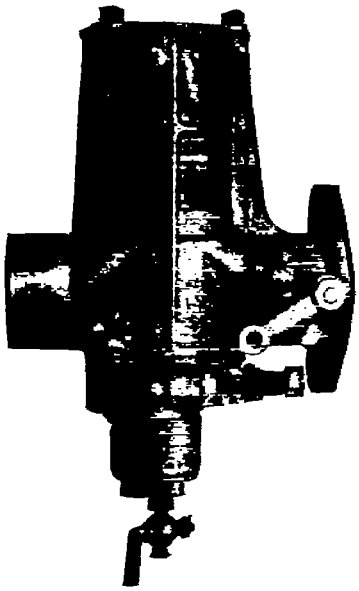

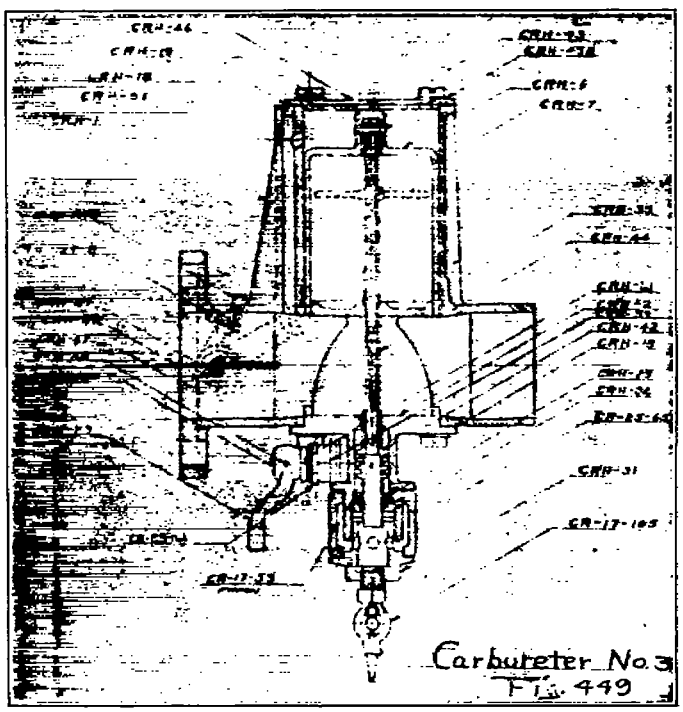

FIG. 14.—Carburetor No. 3.

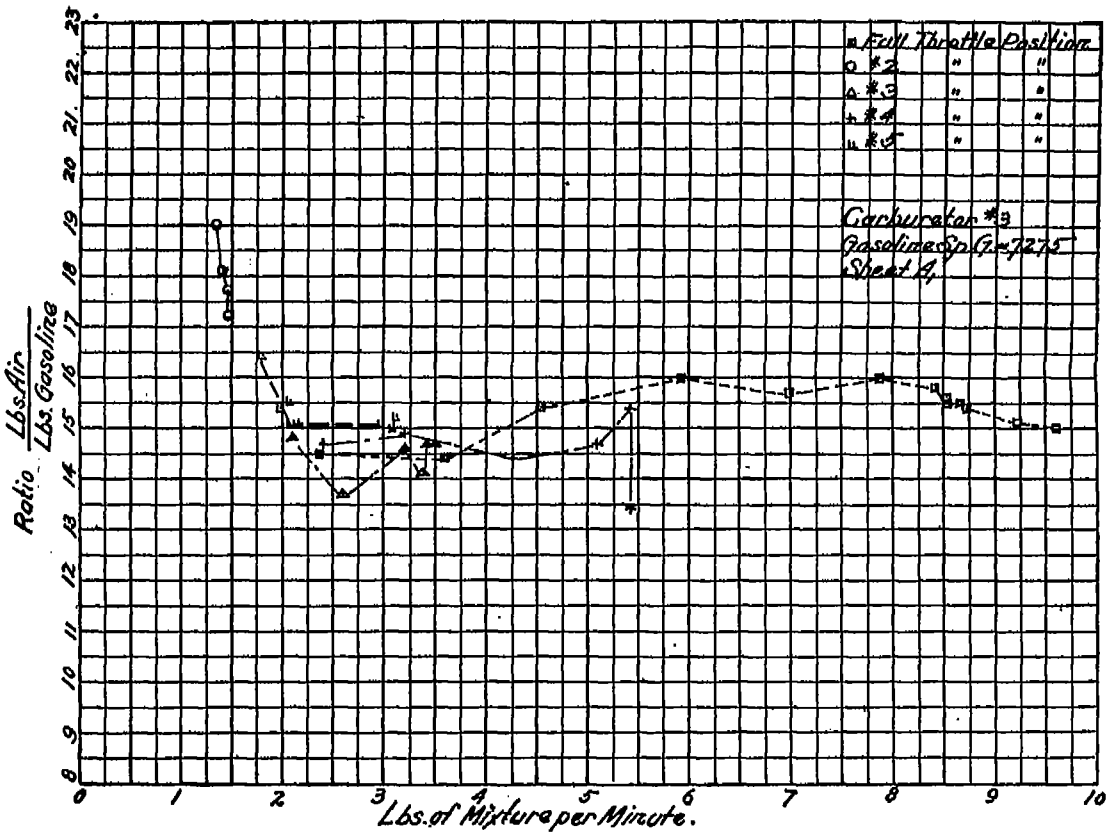
Full Throttle Position
#2 " "
#3 " "
#4 " "
#5 " "
Carburetor #3
Gasoline Sp. G. = .7275
Sheet 4.
Ratio Lbs. Air / Lbs. Gasoline
Lbs. of Mixture per Minute.
0
1
2
3
4
5
6
7
8
9
10
8
9
10
11
12
13
14
15
16
17
18
19
20
21
22
23

Fig. 16.

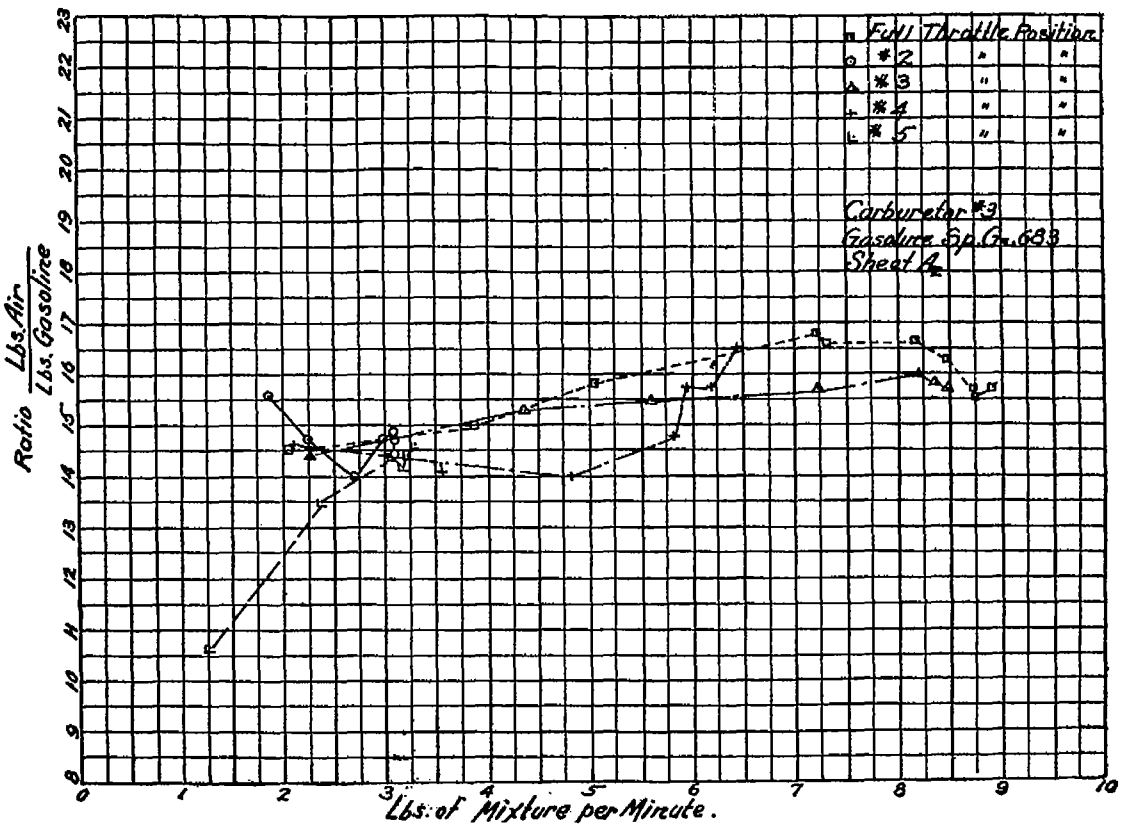
Full Throttle Position
#2 " "
#3 " "
#4 " "
#5 " "
Carburetor #3
Gasoline Sp. Gr. .683
Sheet 4
Ratio Lbs. Air / Lbs. Gasoline
Lbs. of Mixture per Minute.
8
9
10
11
12
13
14
15
16
17
18
19
20
21
22
23
0
1
2
3
4
5
6
7
8
9
10

Fig. 16.

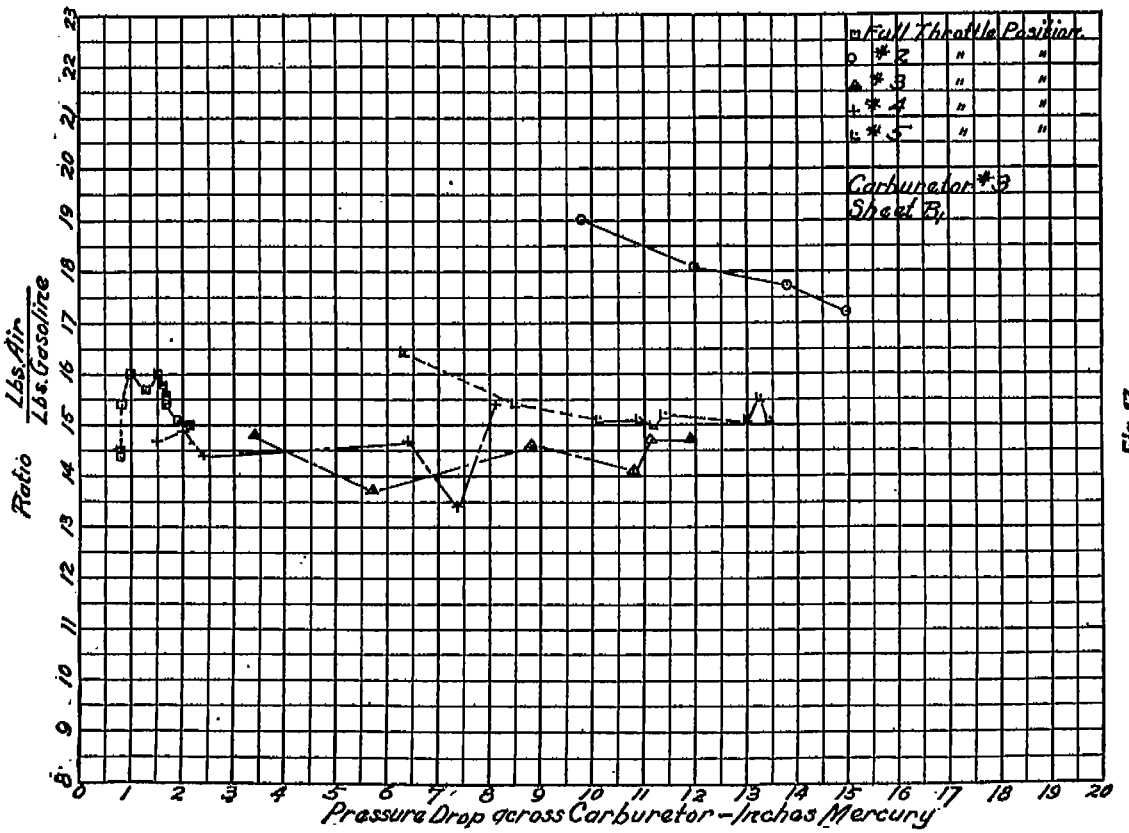
Full Throttle Position.
2 " "
3 " "
4 " "
5 " "
Carburetor #3
Sheet B.
Ratio Lbs. Air / Lbs. Gasoline
Pressure Drop across Carburetor - Inches Mercury

Fig. 17.

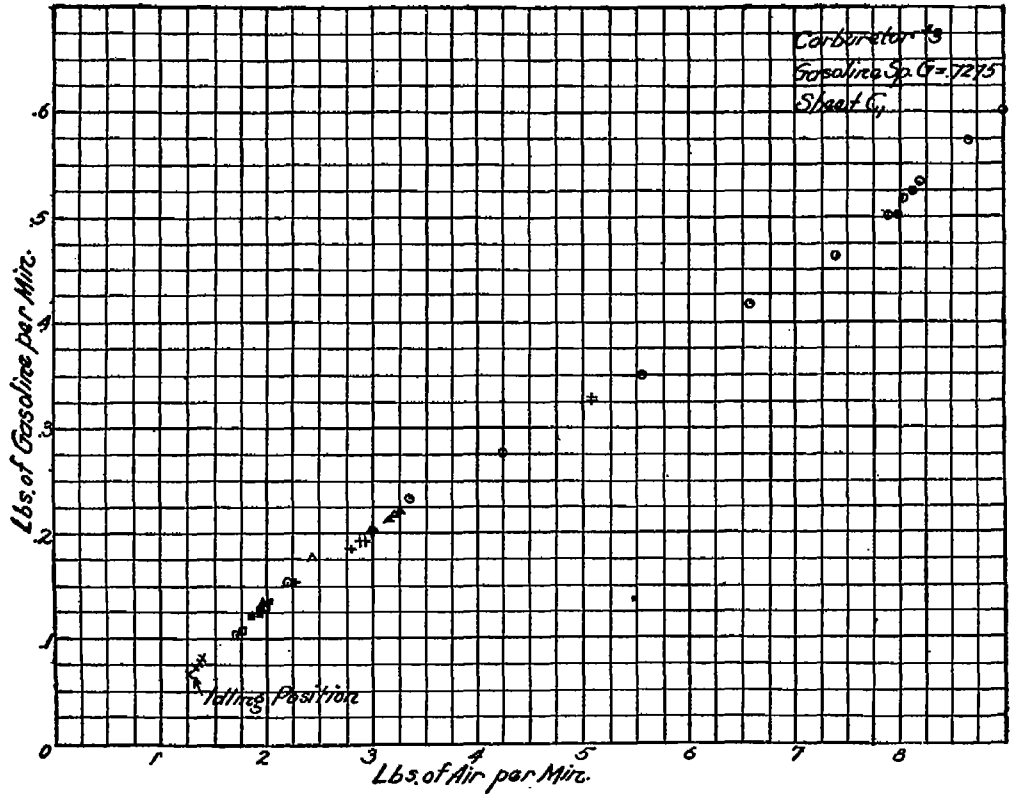
Carburetor #3
Gasoline Sp. G=.7275
Sheet G.
Idling Position
Lbs. of Gasoline per Min.
Lbs. of Air per Min.
0
.1
.2
.3
.4
.5
.6
1
2
3
4
5
6
7
8

Fig. 18.

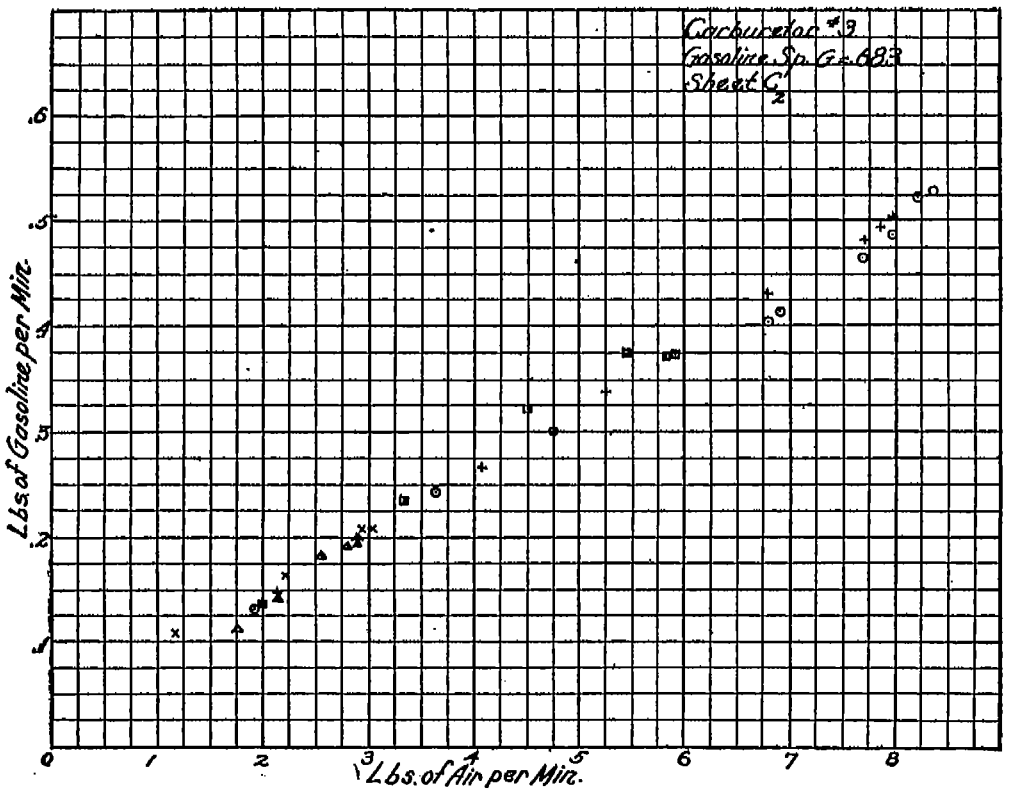
Carburetor #9
Gasoline Sp. G. = .683
Sheet G2
Lbs. of Gasoline per Min.
Lbs. of Air per Min.
.1
.2
.3
.4
.5
.6
0
1
2
3
4
5
6
7
8

Fig. 19.

while the flow through the other is limited by the amount which may pass into a well open to the atmosphere under a constant head. This arrangement places the carburetor into the new class 6.5.

When examining the results it should be noted that the carburetor is somewhat smaller than the rest of the instruments, as the list at the beginning of the test report shows. In this connection it may be remarked that the sizes 1¼ inches, 1½ inches, etc., as given in manufacturers' catalogues, do not accurately define the actual diameter of the discharge passage. Sometimes the actual diameter is less, in other cases it is greater than the list size, a custom which seems very unnecessary.

The results are plotted on figures 21–25, and figures 21 and 22 suggest the following comments:

(*a*) The action of the separate idling device is plainly seen in figure 21, where the points of group 2 represent this throttle position. Naturally these points could have been shifted downward, i. e., the mixture could have been made richer by adjusting screw O, figure 455. The variation in mixture proportions during idling is, however, considerable, between 18.4 and 20.7. This, of course, is not as important as the regulation for higher flow rates.

In figure 22, group 2, the throttle has been opened a little more than in test with the heavier gasoline and the main jets have begun to operate. Still the variation in the proportions is very large, between 13 and 15.5 in figure 22 (group 2) and between 13.8 and 16.9 in figure 456 (group 3).

(*b*) As the throttle is further opened, groups 4, 5, and full, the action becomes more regular. Conditions in the two tests agree quite closely. In each case the mixture gradually becomes leaner until a flow rate of about 4 pounds per minute is established. Between 4 pounds and 7 pounds the average remains constant at about 16.4 in each case, and 7 pounds of mixture per minute would seem to be the upper limit of the working range. At higher flow rates the mixture again becomes richer.

(*c*) The variation in mixture proportions for the same flow rate but different throttle positions is not large, comparatively, at least, except for the lower range of flow rates, i. e., below about 2.5 pounds of mixture per minute. For example, on figure 22, between 4 and 7 pounds' flow, the maximum variation is only 0.7 for an average ratio of about 16.3, corresponding to 4.3 per cent.

(*d*) If, however, the intention is to have a constant ratio through the whole working range, then the results must be looked at in a different manner. Leaving out group 2 in figure 456, the ratio in figure 21 ranges from 13.8 to 16.9 and in figure 22 from 13 to 16.7.

(*e*) The test results for this carburetor are of especial interest, since it is the only carburetor tested which has no moving parts, designed to regulate the proportion by their automatic operation, excepting carburetor No. 10, which has to be discussed by itself. Now, comparing all sheets marked "A" it will be plainly seen that No. 4 carburetor shows some irregularities and erratic tendencies, especially in the lower flow ranges, but nothing like some of the instruments, and none of them can be said to excel No. 4 in this respect. This again tends to substantiate the claim that those gross irregularities are due to sticking and binding of the moving parts. That at low-

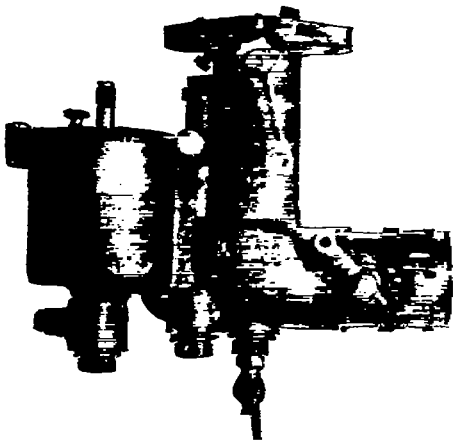

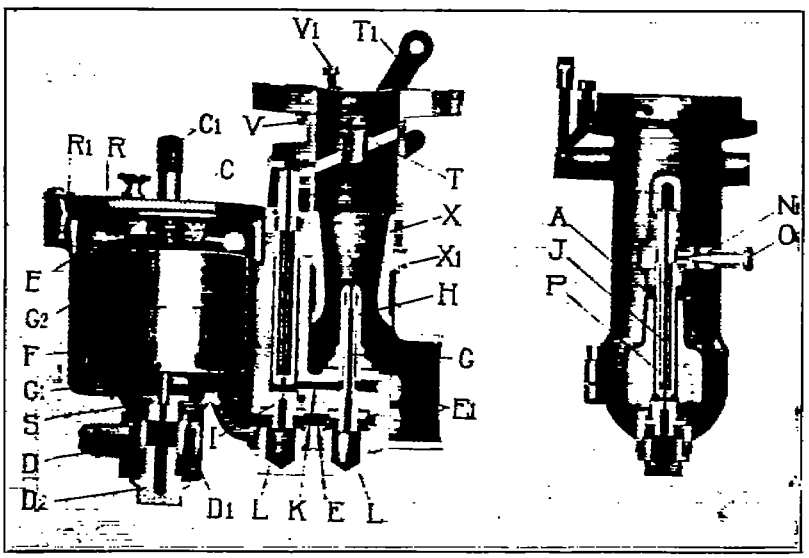

FIG. 20.—Carburetor No. 4.

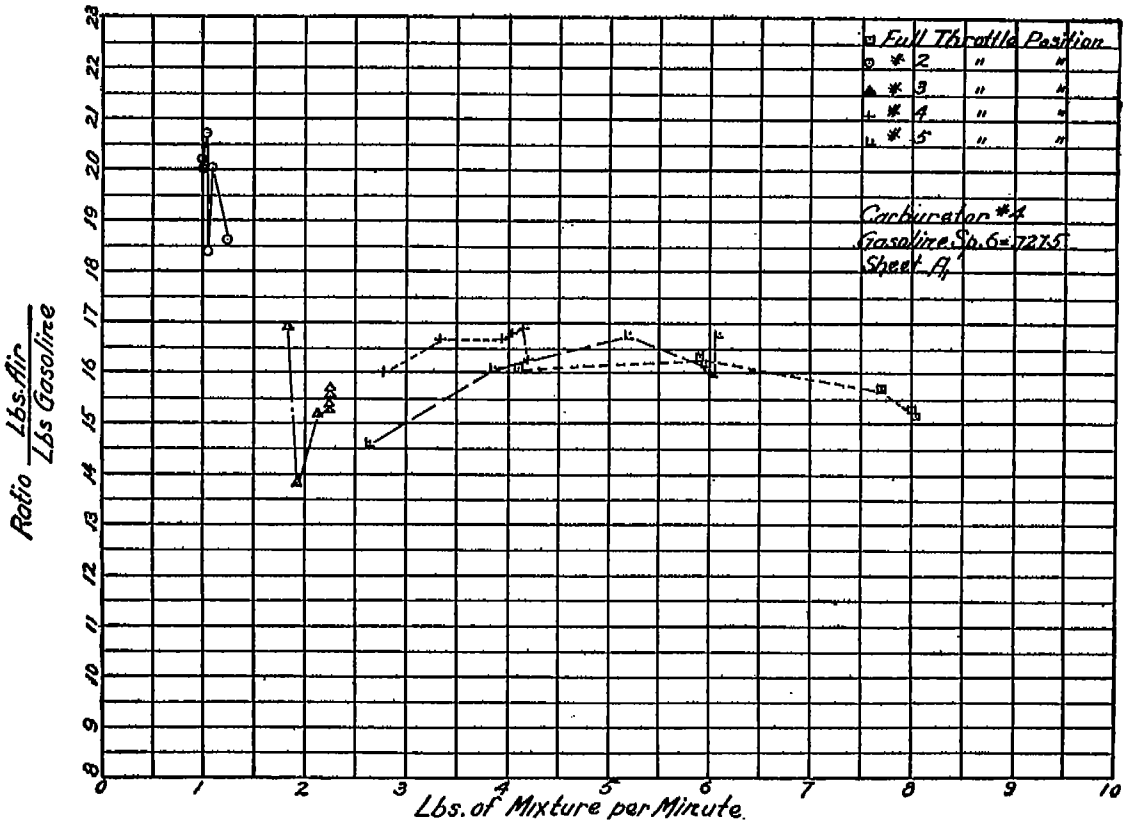
Full Throttle Position
2 " "
3 " "
4 " "
5 " "
Carburetor #4
Gasoline Sp. G. = .7275
Sheet A
Ratio Lbs. Air / Lbs Gasoline
Lbs. of Mixture per Minute
0
1
2
3
4
5
6
7
8
9
10
8
9
10
11
12
13
14
15
16
17
18
19
20
21
22
23

Fig. 21.

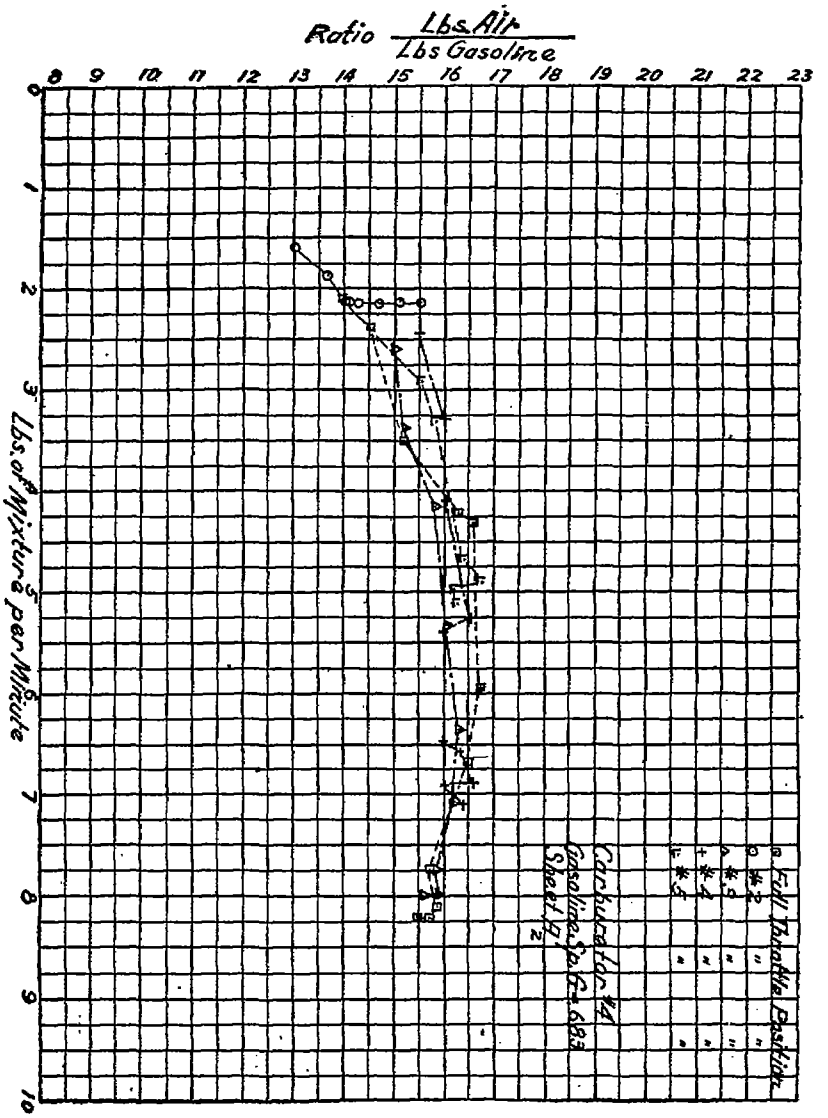
Ratio Lbs. Air / Lbs Gasoline
8 9 10 11 12 13 14 15 16 17 18 19 20 21 22 23
0 1 2 3 4 5 6 7 8 9 10
Lbs. of Mixture per Minute
Full Throttle Position
#2
#3
#4
#5
Carburetor #1
Gasoline No. 6183
Sheet 12

Fig. 22.

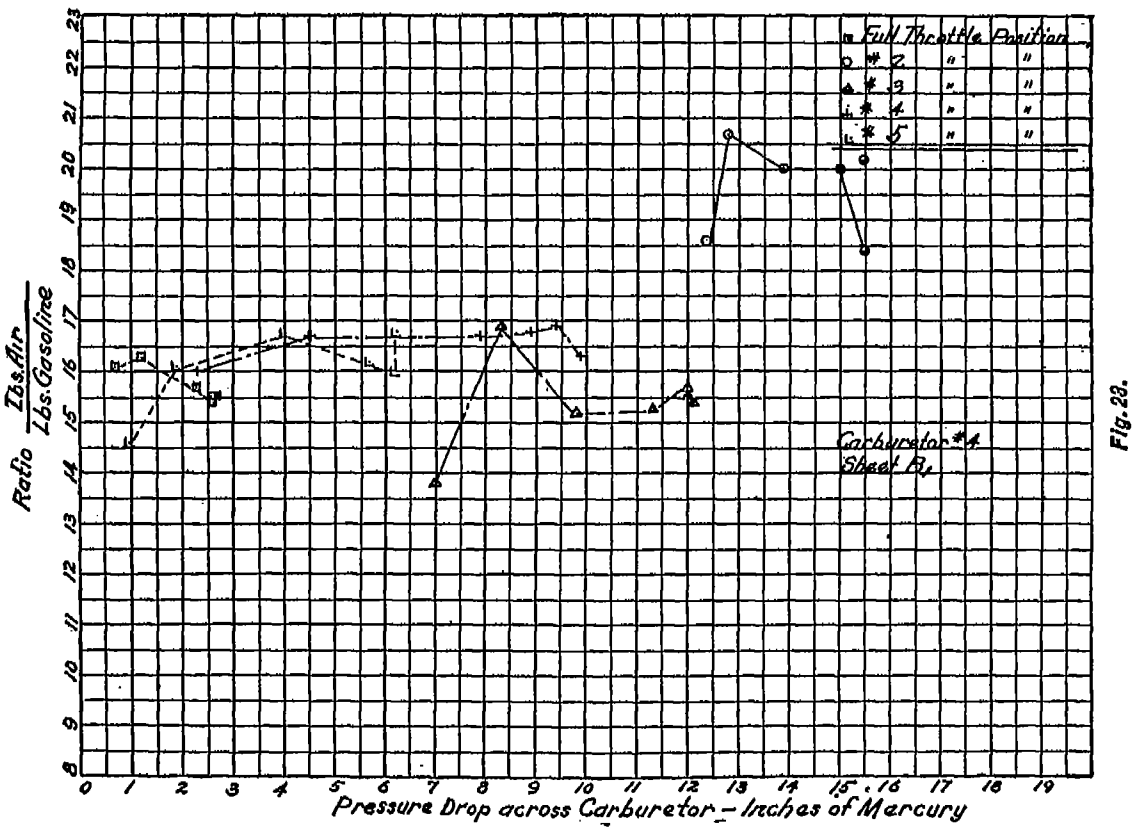
Full Throttle Position
2 " "
3 " "
4 " "
5 " "
Carburetor #4
Sheet B
Ratio Lbs. Air / Lbs. Gasoline
Pressure Drop across Carburetor – Inches of Mercury

Fig. 23.

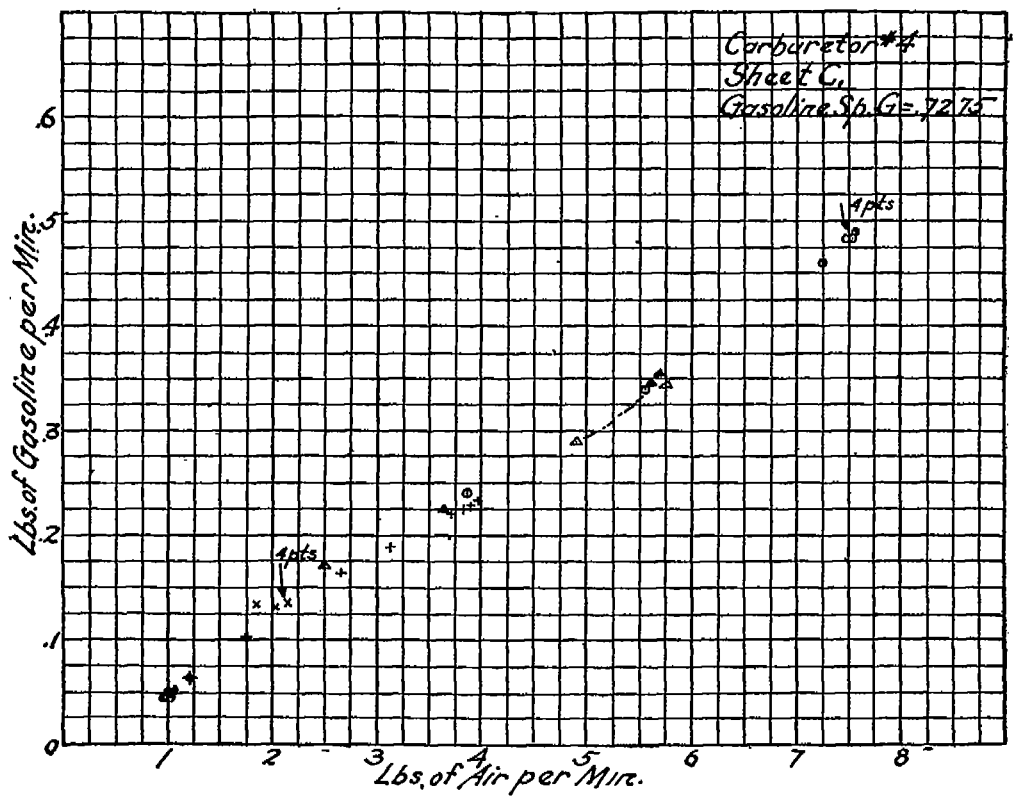
Carburetor #4
Sheet C.
Gasoline Sp. G = .7275
4 pts
4 pts
Lbs. of Gasoline per Min.
Lbs. of Air per Min.
0
.1
.2
.3
.4
.5
.6
1
2
3
4
5
6
7
8

Fig. 24.

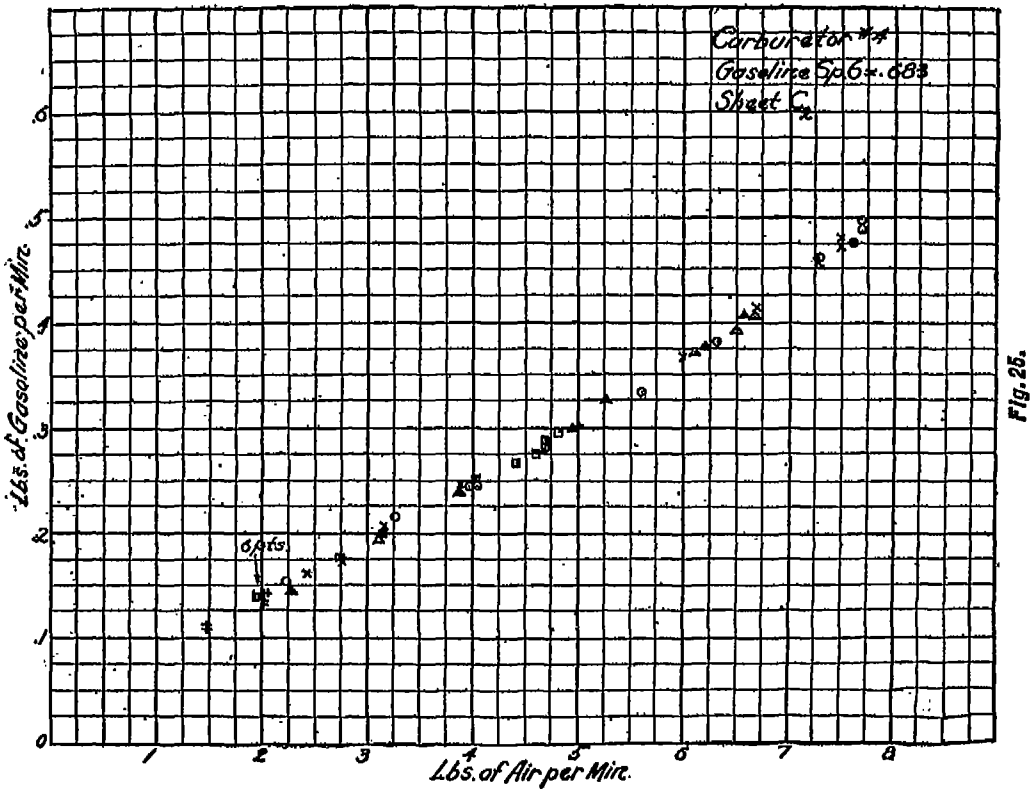
Carburetor #4
Gasoline Sp.G.=.683
Sheet C
6 pts.
Lbs. of Gasoline per Min.
Lbs. of Air per Min.
0
1
2
3
4
5
6
7
8

Fig. 26.

flow rates all of the carburetors exhibit erratic tendencies is not surprising at all, since it is well known from hydraulics that flow through orifices under low heads is apt to be erratic.

(*f*) As mentioned before, the curves could be changed in character by substituting a compensating nozzle of a different size, but whether the average ratio could be thereby made constant over a larger range of flow rate is questionable, since for low-flow rates the atmospheric well must be partly filled with fuel, so that the discharge is not constant. A peculiar "hysteresis" action is claimed by the makers for this intermediate state of affairs, but this can not be discussed here.

Sheet B, figure 23, will be discussed later.

Figures 24 and 25 show very plainly the general tendency of the variation in air-gasoline ratio, but nothing more.

The gasoline level in the float chamber varied as much as 0.45 inch between no flow and maximum flow (see log sheets, pp. 506 and 507), which seems unduly high, but this large drop took place only at the highest flow rates where, according to figure 54, the suction at the mouth of the nozzle rises as high as 64 inches of water, equal to about 87 inches of gasoline, so that the percentage of the total flow head is small.

Carburetor No. 5 (fig. 26).—The carburetor is similar in principle to No. 3 and belongs to the same class, new class 12.5. In this case, however, the metering device consists of a guided poppet valve "floating" in the currents of air, all of which enters through a single inlet. The tapered metering pin is stationary and the aspirating tube rises and falls with the metering valve, being located in the core of the latter. An important distinction, as compared with No. 3, is that the whole metering pin and the surrounding part of the aspirating tube are wholly immersed in the fuel, so that a submerged orifice determines the quantity of fuel. The metering pin may be adjusted up and down by hand until the desired mixture is obtained. A dashpot plunger at the lower end of the metering valve stem is immersed in the fuel.

Since at low-flow rates the metering valve does not lift from its seat, small air passages are provided in the body of the valve, as figure 461 plainly shows, and these passages, leading past the mouth of the aspirating tube, provide the mixture for running the engine until the suction is sufficient to lift the valve.

The results are plotted in figures 27–31, and suggest the following comments:

(*a*) On both figures 27 and 28 the conditions during idling are represented by groups 2 in the lower left-hand corners. The mixture is rich, as is generally demanded, and it varies between wide limits, as in the case in all carburetors having a separate idling arrangement.

(*b*) In both tests the general tendency is for the mixture to become leaner, until the air-gasoline ratio reaches a maximum between 3 and 4 pounds per minute. The mixture then slowly becomes richer, until at about 8.5 pounds per minute, when the gasoline begins to increase much faster than the air. This is probably the point where the metering valve gives maximum port opening so that the air inlet becomes fixed.

(*c*) The mean mixture for different throttle positions between about 16 and 19 on A_1 and 14.8 and 18 on A_2, but there are some enormous variations for the same flow rate at different throttle positions. Thus, in figure 28, at 1.5 pounds flow, the ratios are 12.2, 13.2, and

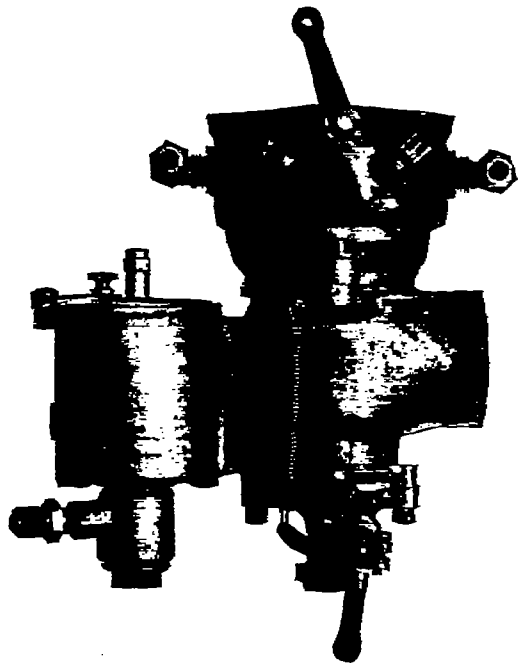

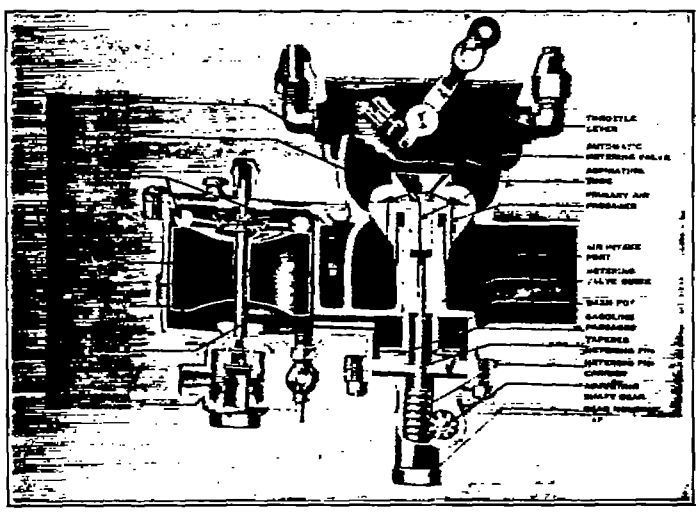

FIG. 26.—Carburetor No. 5.

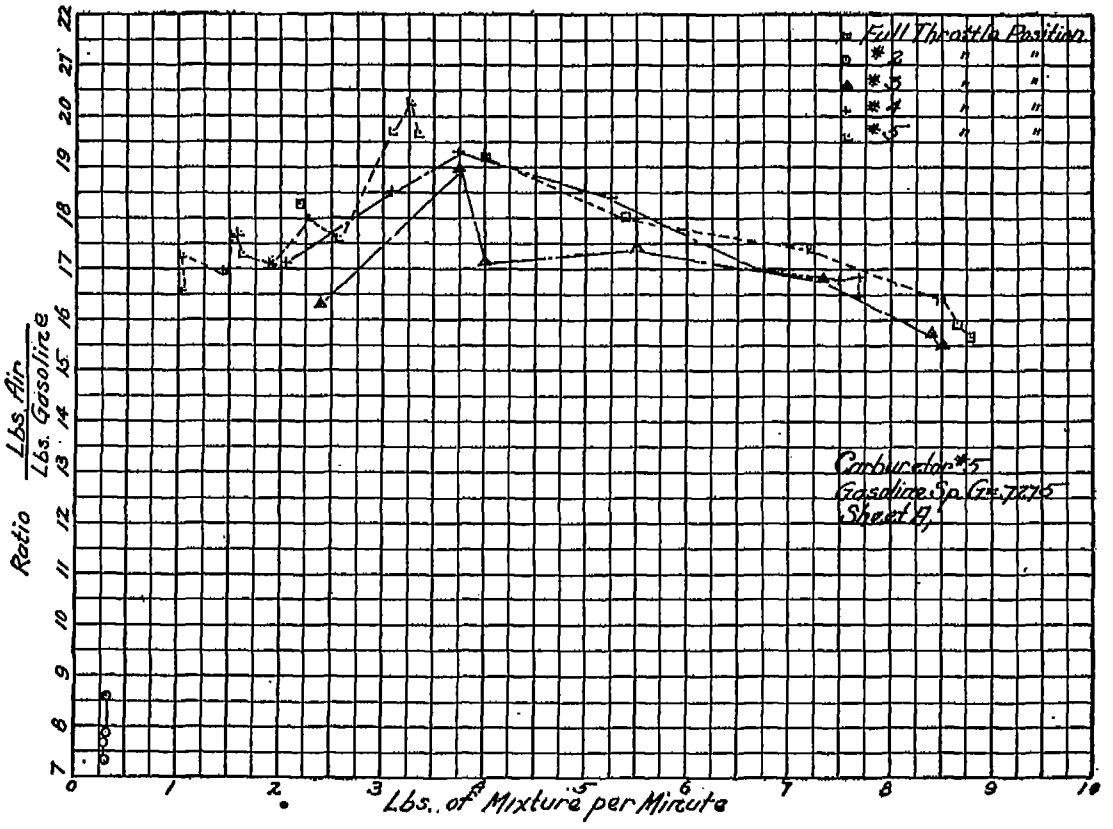
Ratio Lbs. Air / Lbs. Gasoline
Lbs. of Mixture per Minute
Full Throttle Position
#2 " "
#3 " "
#4 " "
#5 " "
Carburetor #5
Gasoline Sp. Gr. .7275
Sheet 19.

Fig. 27.

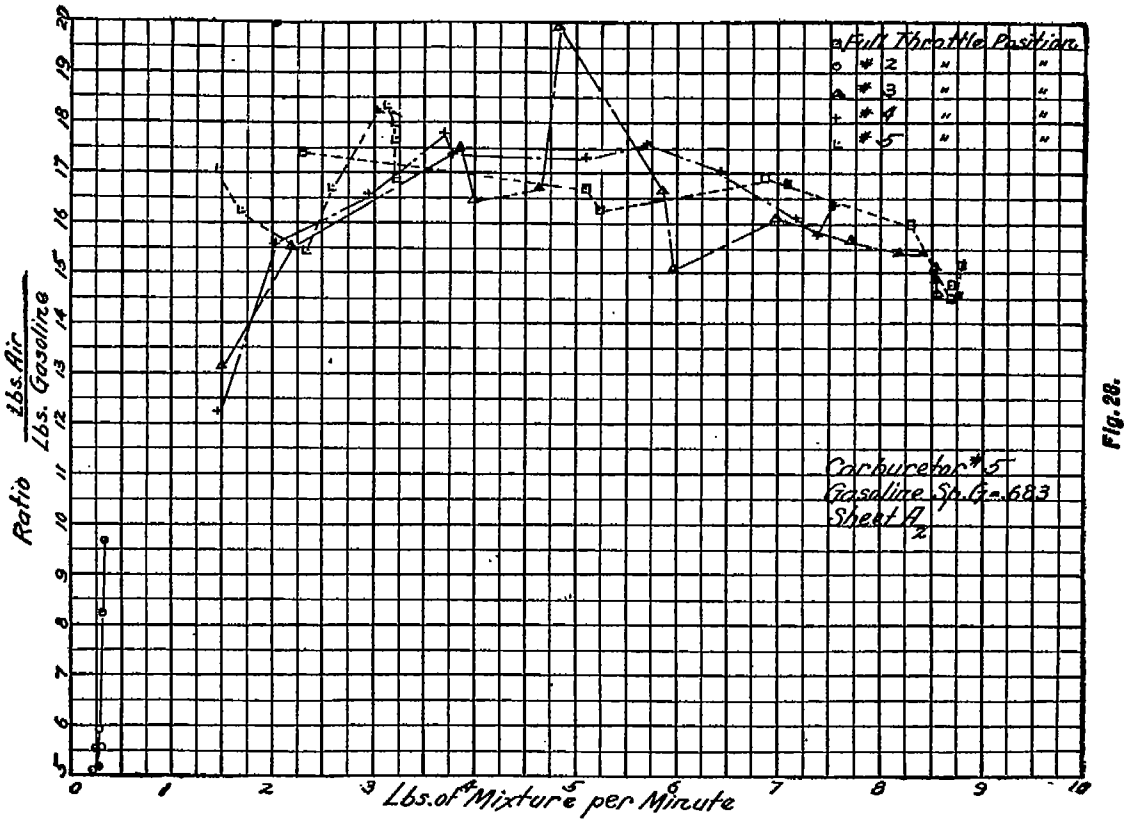
Ratio Lbs. Air / Lbs. Gasoline
Lbs. of Mixture per Minute
Full Throttle Position
2
3
4
5
Carburetor # 5
Gasoline Sp. G. = .683
Sheet A2

Fig. 28.

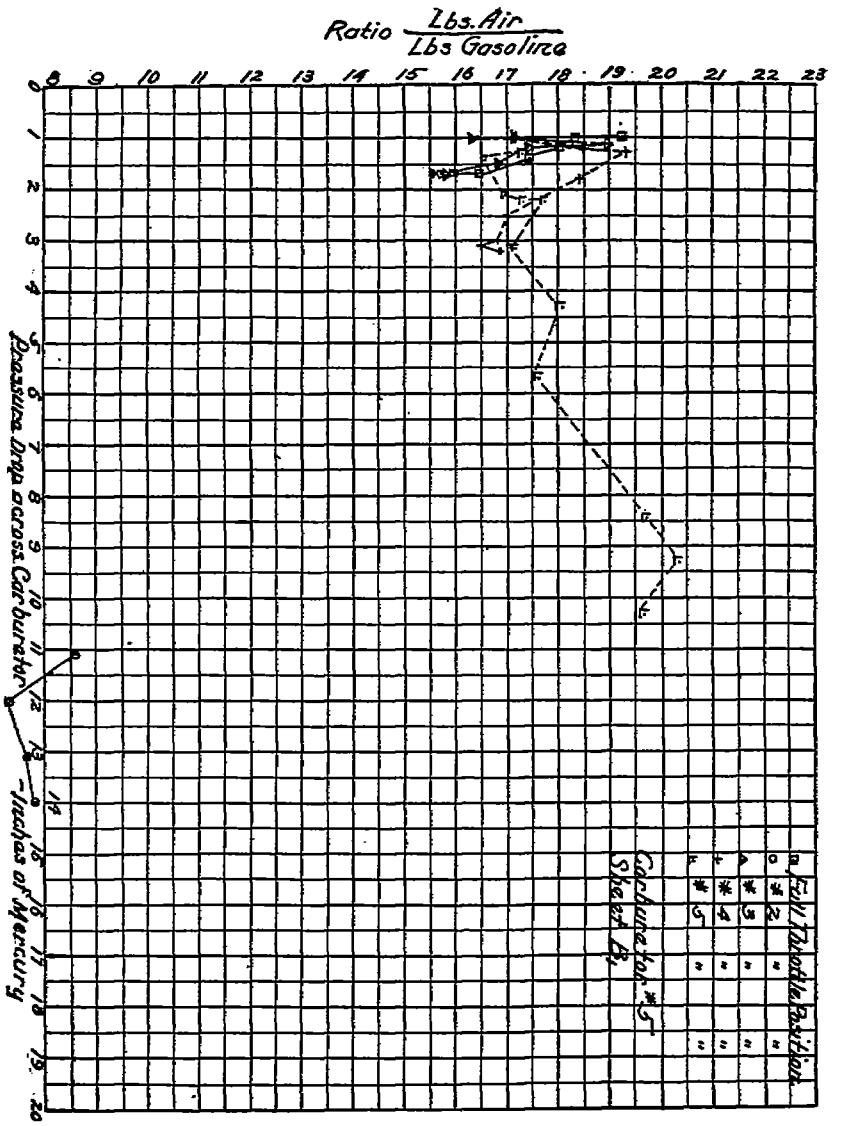
Ratio Lbs. Air / Lbs Gasoline
8 9 10 11 12 13 14 15 16 17 18 19 20 21 22 23
0 1 2 3 4 5 6 7 8 9 10 11 12 13 14 15 16 17 18 19 20
Pressure Drop across Carburetor - Inches of Mercury
Full Throttle Position
Carburetor #5
Shaft B1

Fig. 28.

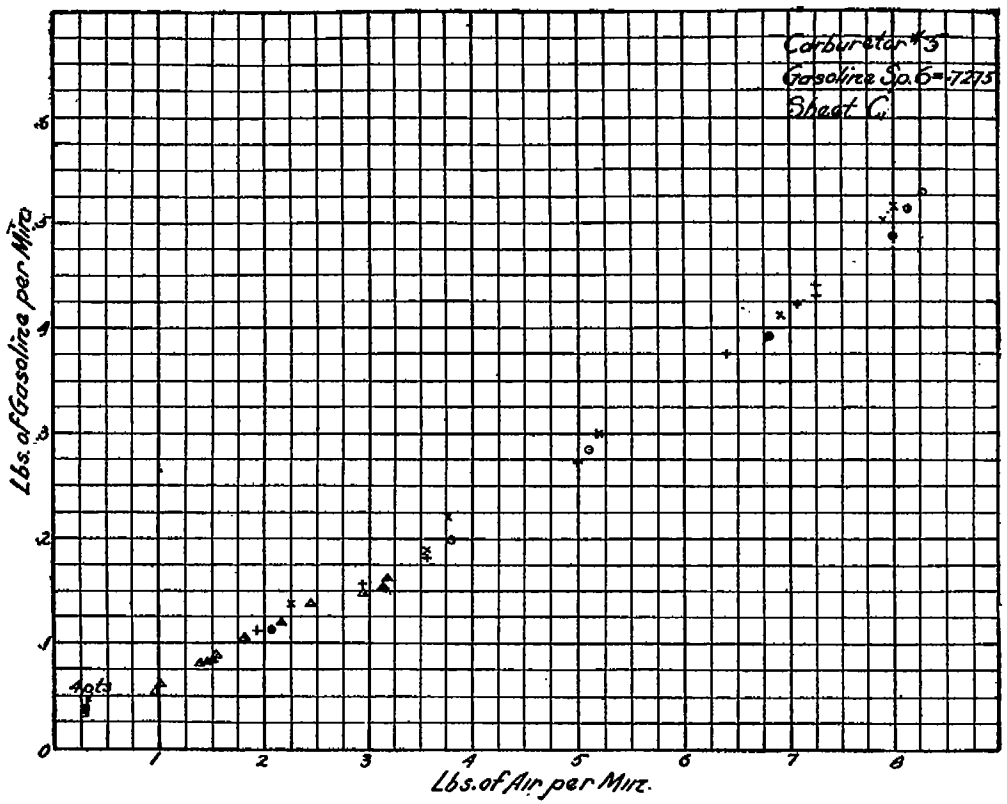
Carburetor #3
Gasoline Sp. G=.7275
Sheet C.
Lbs. of Gasoline per Min.
Lbs. of Air per Min.
4 pts
0
1
2
3
4
5
6
7
8

Fig. 30.

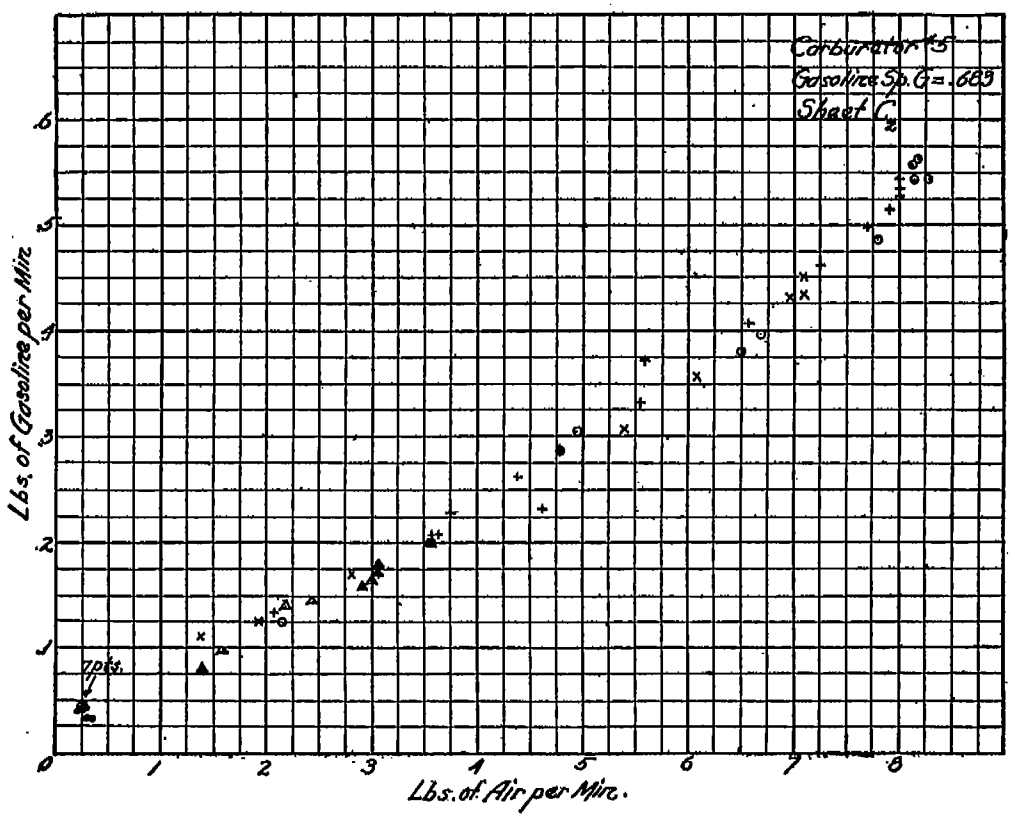
Carburator 15
Gasoline Sp. G = .683
Sheet C
Lbs. of Gasoline per Min.
Lbs. of Air per Min.
Zero
0
1
2
3
4
5
6
7
8

Fig. 31.

0.17 for throttle positions 4, 3, and 5, respectively. This corresponds to a total variation of 4.8, or 34 per cent, referred to the mean, 14.1.

At 7 pounds flow, on the other hand, in the same test, the variation for three throttle positions is only 0.75 for a mean value of 16.3, or 4.6 per cent. Only the irregular action of the metering valve, due to sticking and sluggishness, can account for such discrepancies.

(*d*) Whether the general tendency of all curves, especially the gradual enriching of the mixture with increase in flow, is desirable in a carburetor need not be discussed here. A modification of the outlines of the metering valve would evidently change the characteristics of the ratio versus flow curve, at least as far as the part to the right of the peak is concerned.

Sheets C_1 and C_2, figures 30 and 31, very clearly and much better than A_1 and A_2, show the effect of the fuel density on mixture proportions. More about this will be said later.

The level in the float chamber remained practically constant under all conditions, a maximum variation of 0.1 inch being negligible.

Carburetor No. 6 (fig. 32).—As may be seen in the cross section, this carburetor has three air inlets, one constant and the other two provided with spring-loaded automatic valves. The latter two are interconnected by linkwork, and one of them operates a tapered metering pin for gasoline. Another spray nozzle is in the constant air opening and is the only one in operation until the automatic air valves begin to open. A dashpot piston submerged in gasoline dampens the motion of the automatic air valves. Adjustments for both spray nozzles are provided. Thus the carburetor is seen to belong to new class 14.1.

Inspection of curve sheet C_1, figure 35, demonstrates that the carburetor was adjusted for the test so as to give constant average proportions, since means values are on a straight line passing through the origin, excepting for higher flow rates, beginning with about 4 pounds per minute, where the mixture begins to become slightly leaner. Whether the average ratio could have been made constant for the whole range of flow rates by means of the "high-speed" adjustment can not be stated with certainty.

Sheets A and B, figures 33 and 34, however, show that while the general tendency was to produce constant proportions the ratio actually varied between very wide limits. Whether it is mechanically possible to obtain perfectly free motion with so many moving parts and joints remains to be proven. In the absence of any other satisfactory explanation the test results would seem to indicate that it is not possible. This conclusion receives confirmation from the results of the tests for pressure at the mouth of the spray nozzle. If these results are plotted to a larger scale than the one used in figure 56, or if the log on Table IX is carefully examined, it is plainly seen that the suction increases more or less irregularly with the air flow, thus accounting for the variations in the gasoline-air ratio. When the air-gasoline ratio fluctuates in the extraordinary manner exhibited in figure 33, with a range extending from 11.9 to 17.2, it does not seem to be worth while to discuss mean values, as long as it is not shown that the excessive variation is not unavoidable with such elaborate mechanism.

The variations of the level in the float chamber were negligible, 0.15 inch being the maximum depression.

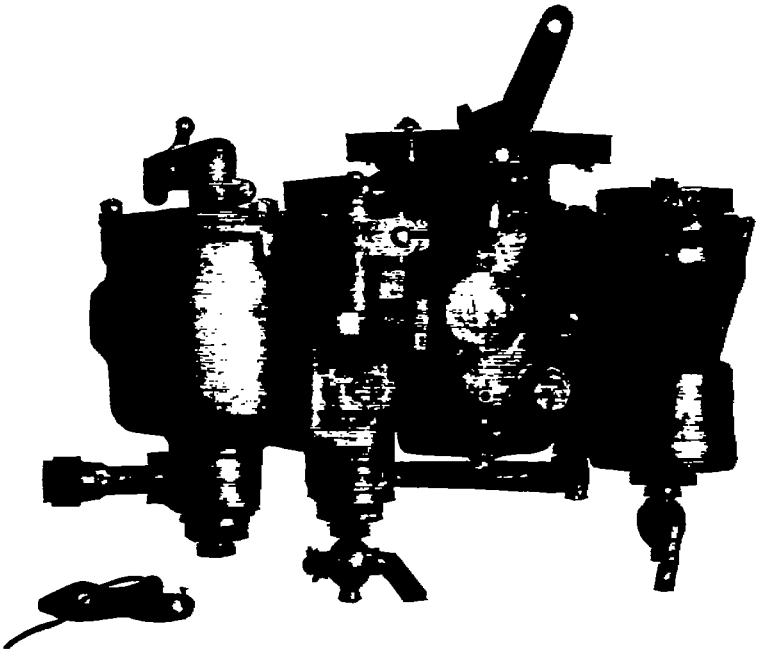

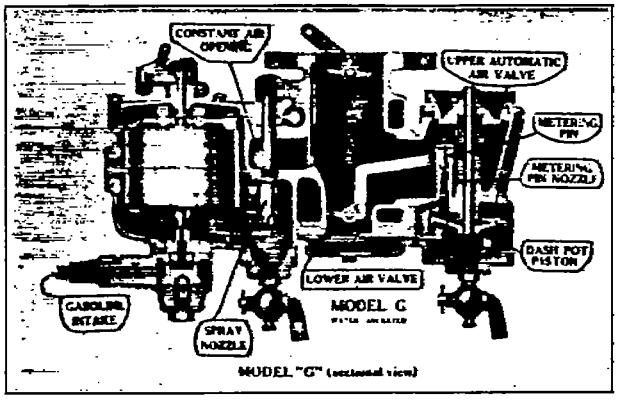

FIG. 32.—Carburetor No. 6.

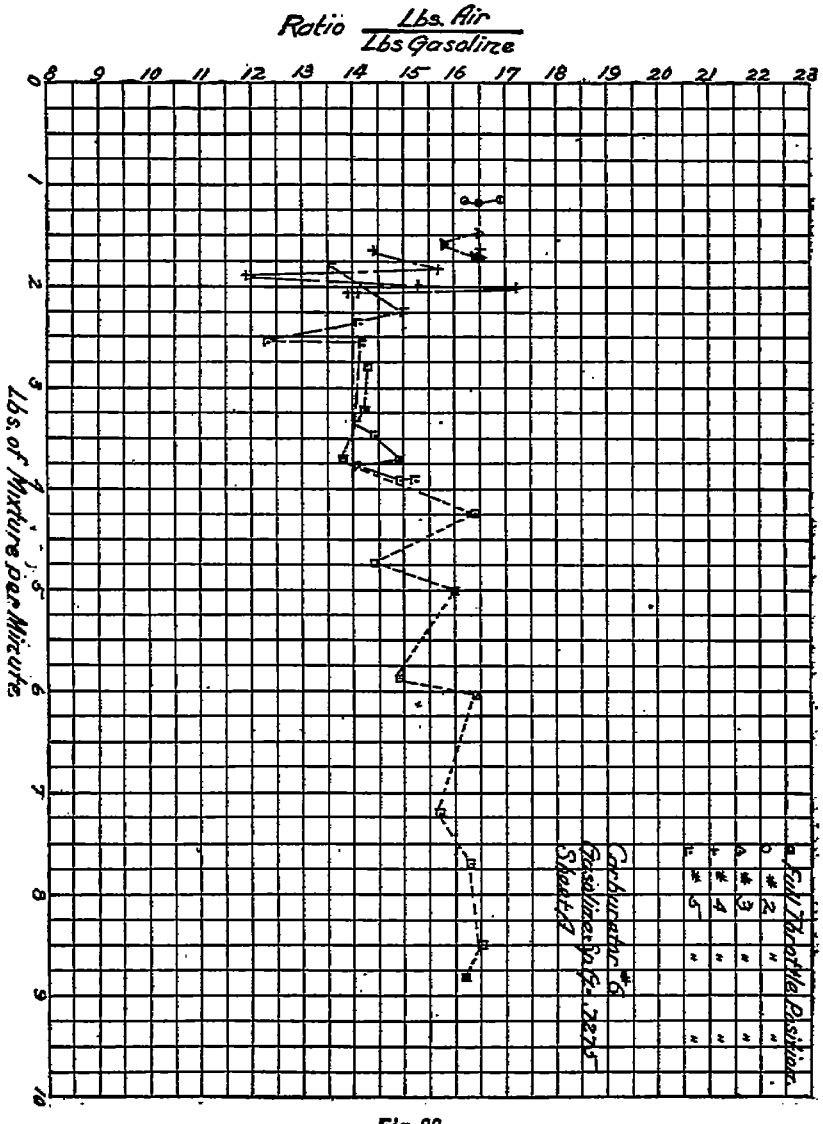
Full Throttle Position.
Carburetor #6
Gasoline Sp. Gr. .7275
Sheet 17
Ratio Lbs. Air / Lbs. Gasoline
Lbs. of Mixture per Minute

Fig. 88.

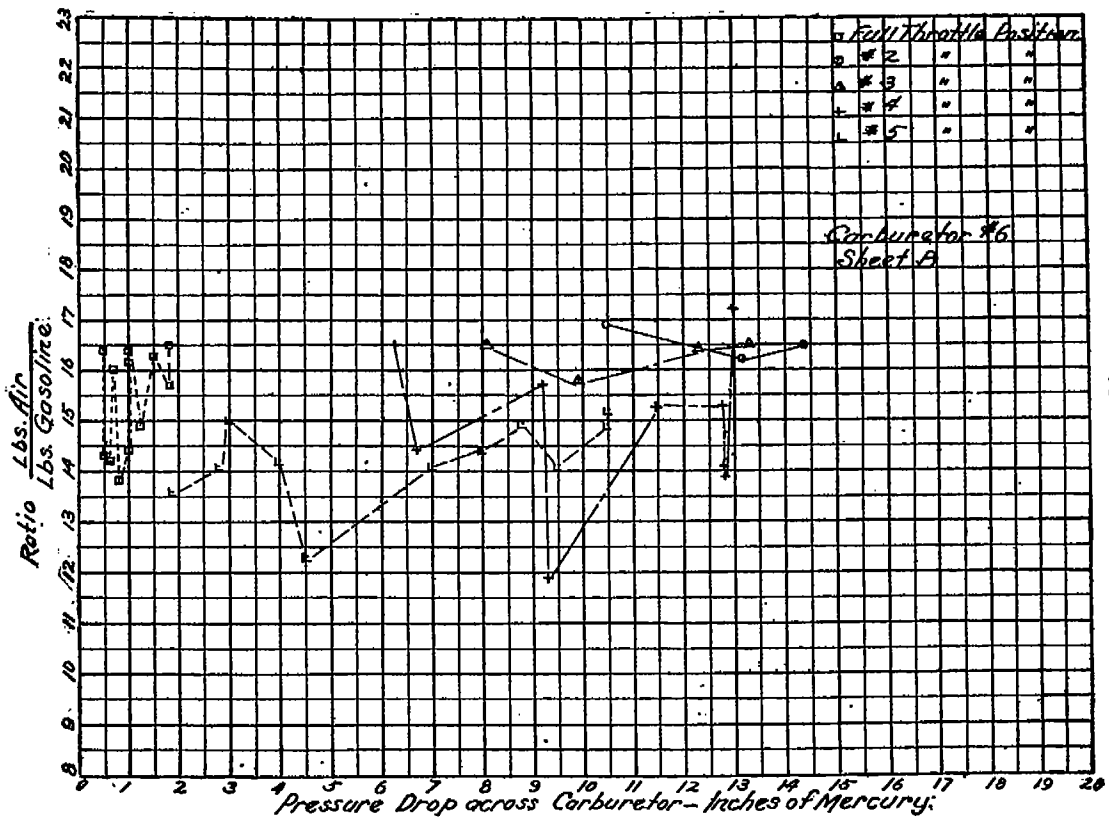
Full Throttle Position
#2 "
#3 "
#4 "
#5 "
Carburetor #6
Sheet B
Ratio Lbs. Air / Lbs. Gasoline.
Pressure Drop across Carburetor – Inches of Mercury.

Fig. 84.

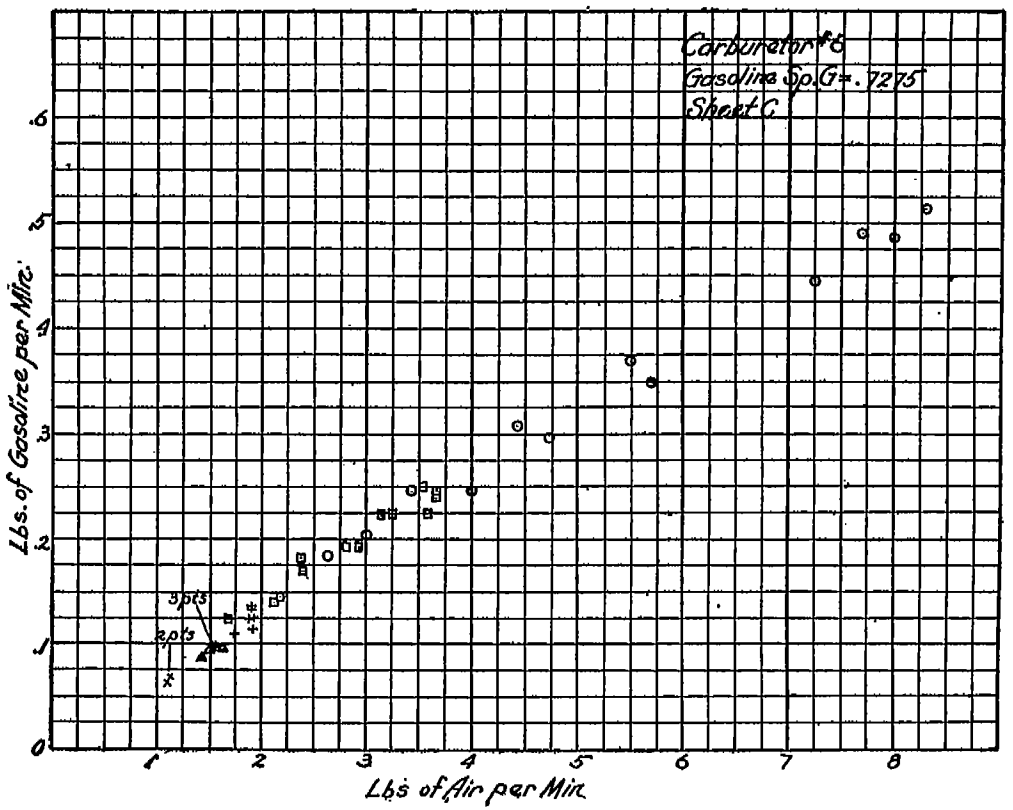
Carburetor #6
Gasoline Sp.G=.7275
Sheet C
Lbs. of Gasoline per Min.
Lbs of Air per Min.
3 pts
2 pts
0
1
2
3
4
5
6
7
8

Fig. 35.

Carburetor No. 7 (fig. 36).—In this carburetor, which has a fixed primary air inlet and a single-spray nozzle, hand adjusted by means of a needle valve, the auxiliary air enters through ports which are kept closed by bronze balls, until the suction is sufficient to raise them from their seats. After that the balls are kept floating in the air by the air flow, thus taking the place of springs such as used in the original Krebs type carburetors, but having the advantage over springs that the load never varies. This construction places the carburetor in new class 8.2.

Comments on results:

(*a*) According to the curves on figures 37–41, the compensating balls evidently do not begin to operate, at least not effectively, until, for this size carburetor, about 4 pounds of mixture per minute pass through. After this point has been reached the mixture maintains constant proportions, if mean values are taken, i. e., the curves representing mean values in figures 37 and 38 are horizontal lines, and in figures 40 and 41 straight inclined lines passing through the origin. The range, however, within which all the points are confined is between 7 and 10 per cent of the mean, in some places less.

(*b*) There must be a point where the balls cease to compensate, but the curves show hardly any falling off of the air-gasoline ratio.

(*c*) The suction at the outlet of the fuel nozzle does not increase with the flow in an absolutely regular manner as the curve on figure 55 and the log in Table X prove. This, of course, accounts for fluctuations in the mixture ratio. The only plausible explanation would seem to be that the balls (there are five of them) which are naturally not guided, do not act with absolute positiveness, although they have, of course, the advantage of total absence of friction.

(*d*) As in other carburetors there is an enormous variation in the mixture proportions at low-flow rates, and especially when the low-flow rate is due to the partial closing of the throttle rather than low engine speed. In this connection see groups 3 in figure 37 and groups 3 and 4 in figure 38. In the latter case for instance (group 4) the mixture flow increases from 2 to 3.6 pounds only, but the ratio increases proportionally to the flow from 9.1 to 14.2, an increase of 56 per cent. Group 4 represents an almost closed throttle position, and as the log readings No. 328 to 334 show, the pressure drop across the carburetor increased from 2.6 to 12.4 inches of mercury. These conditions would be reproduced by an automobile running on a smooth road offering little resistance and with varying degrees of down grade. In an aeroplane engine the higher flow rates would hardly ever be reproduced. The results show that under such conditions every carburetor tested fails to maintain even approximately constant mixture proportions, and that in every case the air to gasoline ratio increases more or less rapidly with the flow. Since at the same time the suction in the inlet manifold increases, the mixture should, if anything, become richer to allow for valve-stem leakage and decreased compression in the cylinder.

(*e*) The variation of the float chamber level was negligible with a maximum depression of 0.1 inch.

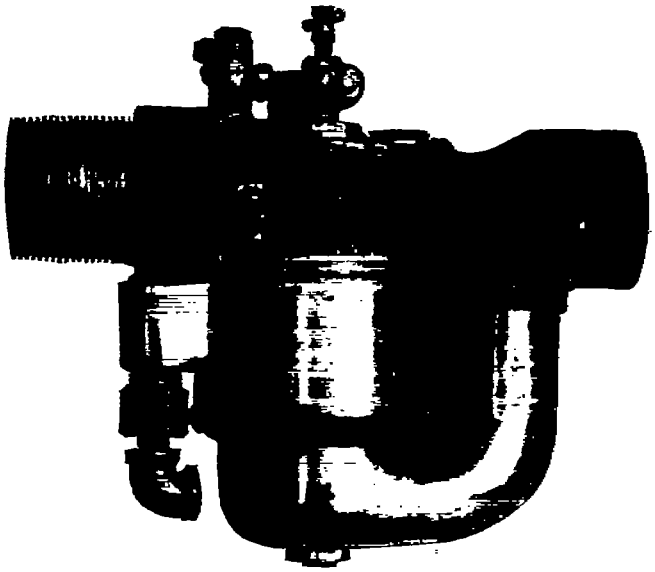

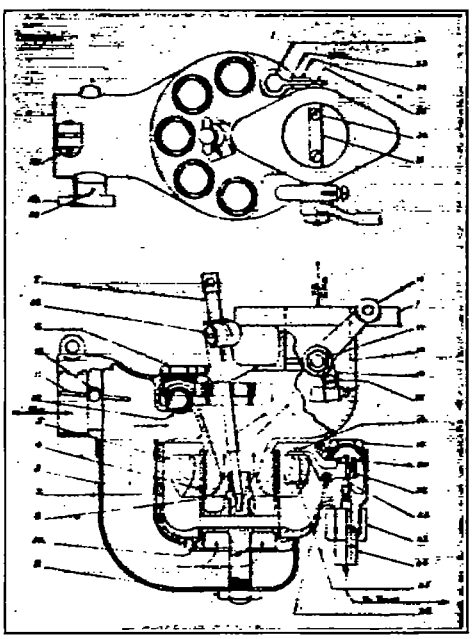

FIG. 36.—Carburetor No. 7.

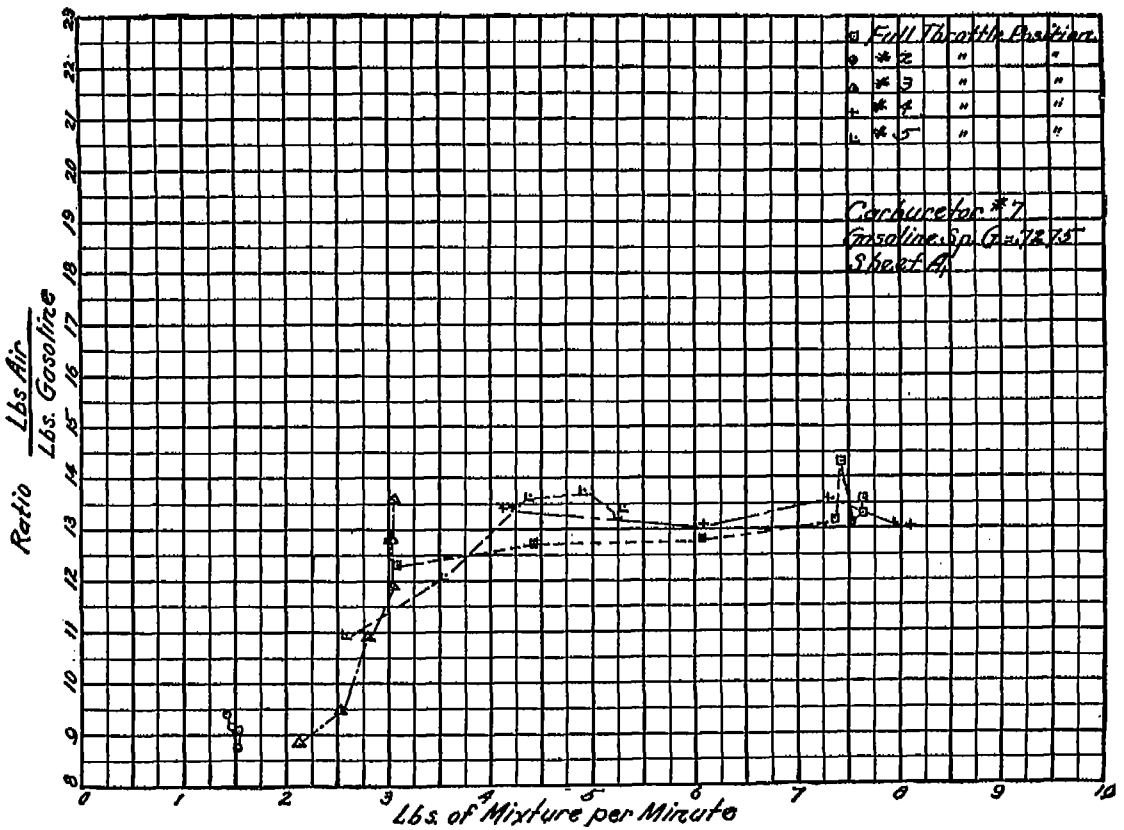
Full Throttle Position
#2 "
#3 "
#4 "
#5 "
Carbureter #7
Gasoline Sp. G. = .7275
Sheet A.
Ratio Lbs. Air / Lbs. Gasoline
Lbs. of Mixture per Minute
8
9
10
11
12
13
14
15
16
17
18
19
20
21
22
23
0
1
2
3
4
5
6
7
8
9
10

Fig. 37.

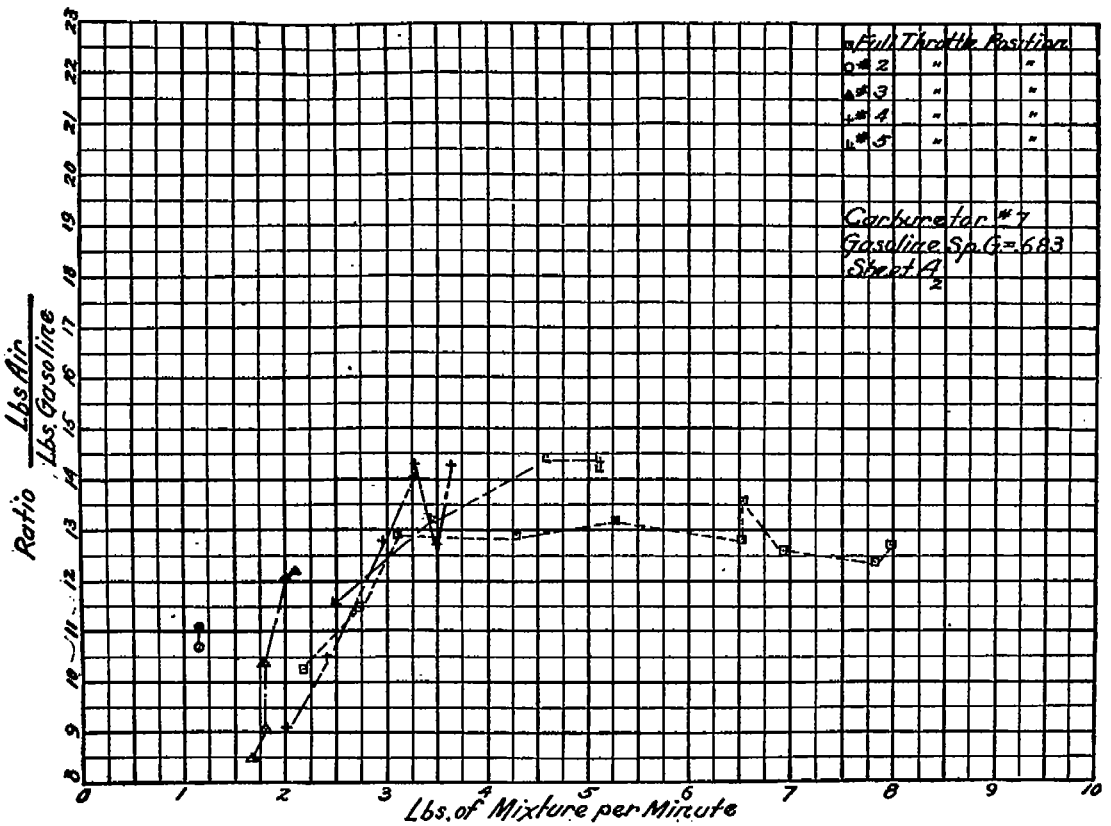
Full Throttle Position
#2 "
#3 "
#4 "
#5 "
Carburetor #7
Gasoline Sp.G=.683
Sheet A
Ratio Lbs Air / Lbs Gasoline
Lbs. of Mixture per Minute
0
1
2
3
4
5
6
7
8
9
10
8
9
10
11
12
13
14
15
16
17
18
19
20
21
22
23

Fig. 38.

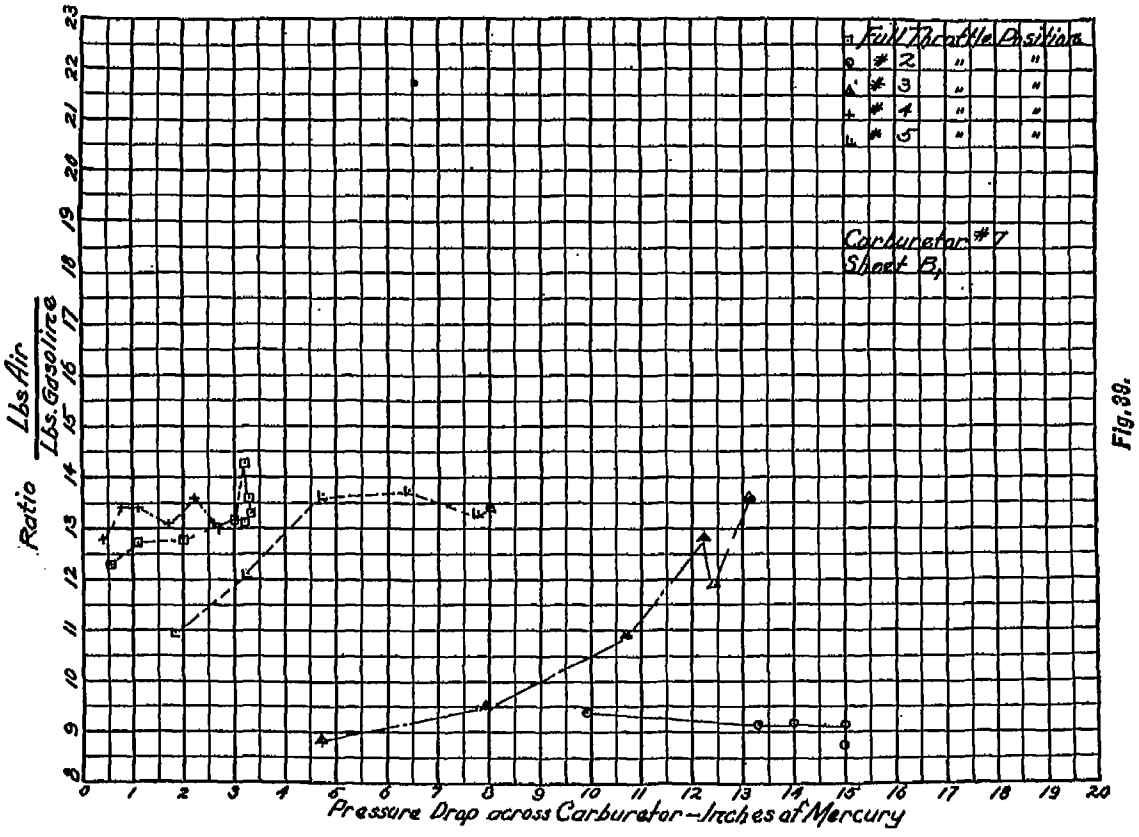
Full Throttle Position
2 " "
3 " "
4 " "
5 " "
Carburetor #7
Sheet B,
Ratio Lbs. Air / Lbs. Gasoline
Pressure Drop across Carburetor—Inches of Mercury

Fig. 38.

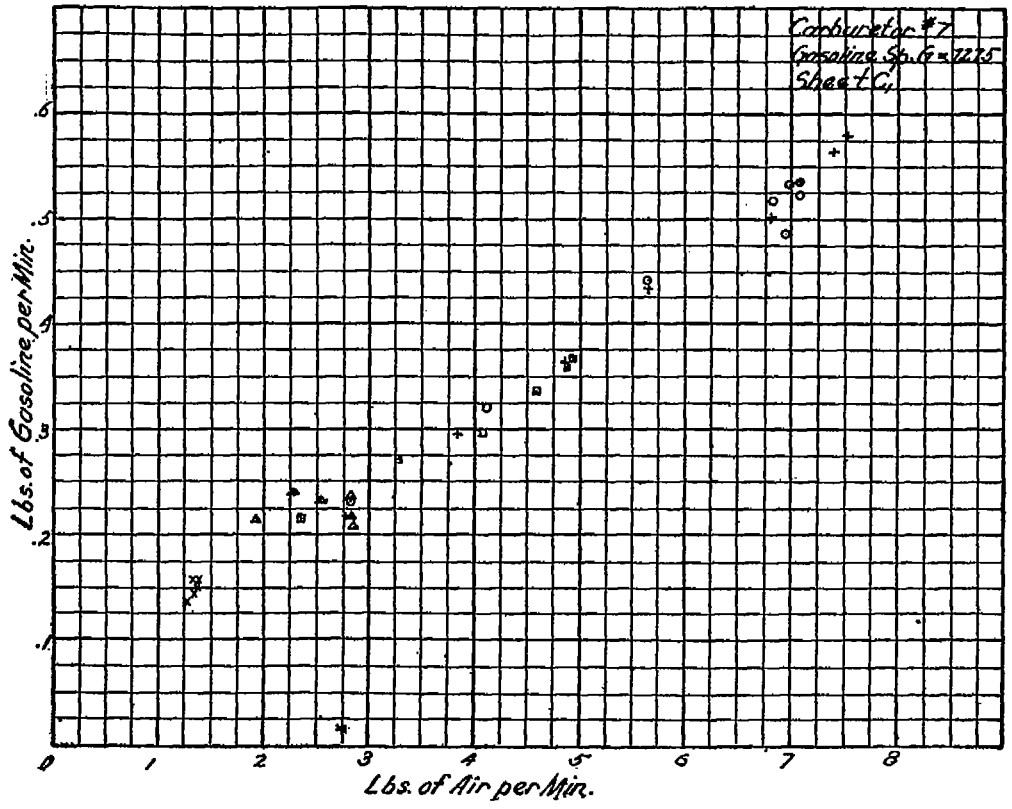
Carburetor #7
Gasoline Sp. G = .7275
Sheet C1
Lbs. of Gasoline per Min.
Lbs. of Air per Min.
.1
.2
.3
.4
.5
.6
0
1
2
3
4
5
6
7
8

Fig. 40.

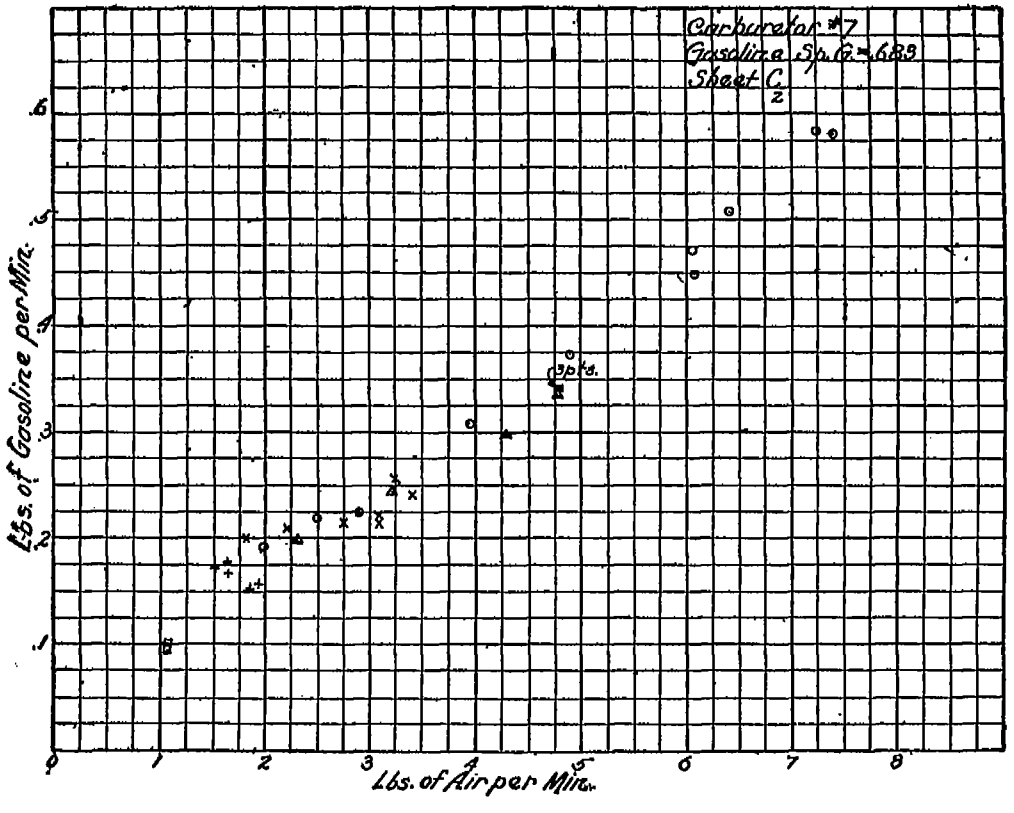
Carburetor #7
Gasoline Sp. G. = .683
Sheet C/2
Lbs. of Gasoline per Min.
Lbs. of Air per Min.
.1
.2
.3
.4
.5
.6
0
1
2
3
4
5
6
7
8
3 pts.

Fig. 41.

Carburetor No. 8 (fig. 42).—The principal features of this carburetor are a vertical plunger fitting in a cylinder, the upper side of which forms a dash port, air openings being uncovered as the plunger rises, and a tapered fuel metering pin rigidly attached to the hollow plunger, and dipping into the stationary aspirating tube. The plunger is "floating" in the current of air, which results in a practically constant vacuum in the mixing chamber surrounding the plunger. The test results substantiate the manufacturer's claim of a "constant vacuum carburetor." As figure 56 and Table X prove, the greatest difference in suction at the mouth of the fuel nozzle between minimum and maximum flow rates is only 0.8 inch of water. The carburetor belongs in new class 12.7, and the principal difference between it and No. 3 and No. 5 is that in No. 5 the whole metering pin is submerged in the fuel, and in No. 3 the point where the metering pin emerges from the aspirating tube is in the current of air, while in No. 8 the latter point is surrounded by air, but this air is dead air, so to speak, away from the air current, more or less saturated with fuel. The feature, however, which puts this in a class distinct from No. 3 and No. 5 is that the top of the air-tight float chamber is connected by a small tube to the mixing chamber. The vacuum thus produced on top of the fuel, however, may be varied by means of a hand regulated air valve which allows more or less air to leak in, thus partially destroying the vacuum and regulating the fuel flow. By means of an adjustable collar supporting the plunger when at rest, the opening of the fuel ports is given a "lead" with respect to the air ports which results in a richer mixture for idling.

Discussion of results (see figs. 43, 44, 45):

(*a*) The effect of the idling arrangement above described is plainly seen in figure 43 where the points of group 2 represent the idling position.

(*b*) Figures 43 and 45 show that the mixture gradually becomes leaner as the flow increases, up to about 8 pounds per minute mixture flow. At this point apparently the plunger has reached the limit of its travel, and the carburetor becomes a fixed air-inlet fixed fuel-inlet carburetor which accounts for the mixture becoming richer. Eight pounds represents, therefore, the limit of the working range unless a richer mixture is desired at extreme engine speeds in order to obtain maximum power for racing or whenever maximum engine power is desired.

(*c*) Between 2 and 8 pounds per minute mixture flow, the air-fuel ratio increases from 12 to 16, an increase of 33 per cent, or a variation of 28.6 per cent referred to a mean ratio of 14. This general tendency can, in the case of this carburetor, be changed only by substituting a metering pin of different contours.

(*d*) If one were to omit about six erratic readings, the results would be very good, even excellent, as far as constancy of proportions for any one rate of flow at different throttle positions is concerned. What right anyone has, however, to omit inconvenient readings is not evident, as long as no experimental error can be shown. Again occasional binding of the plunger is the only plausible explanation. The special test plotted in figure 56 does not give any indication of irregularities in the plunger action, but that can not be considered as conclusive unless a great many readings were taken.

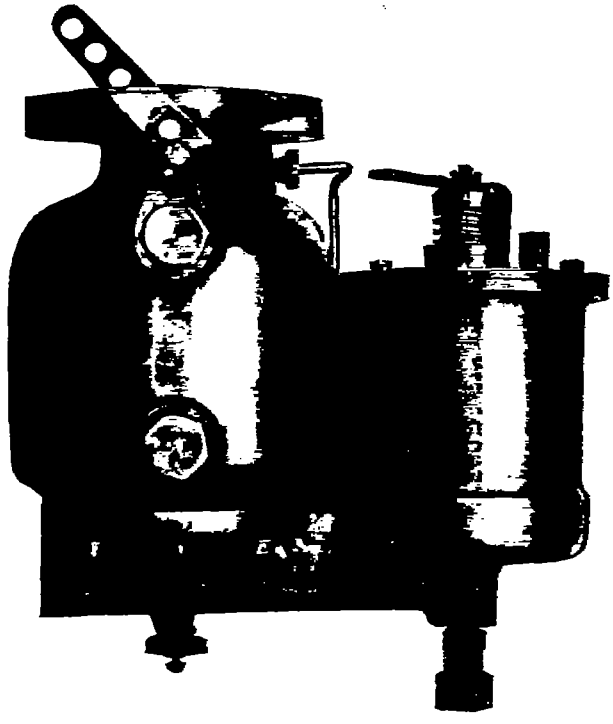

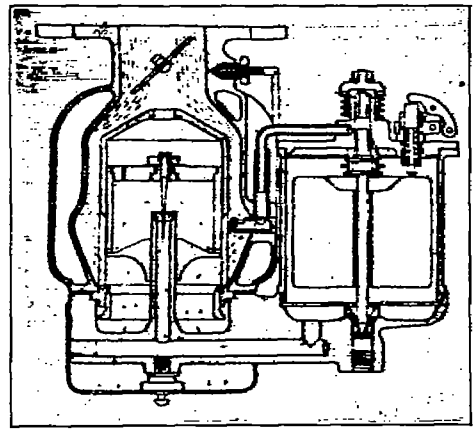

FIG. 42.—Carburetor No. 8.

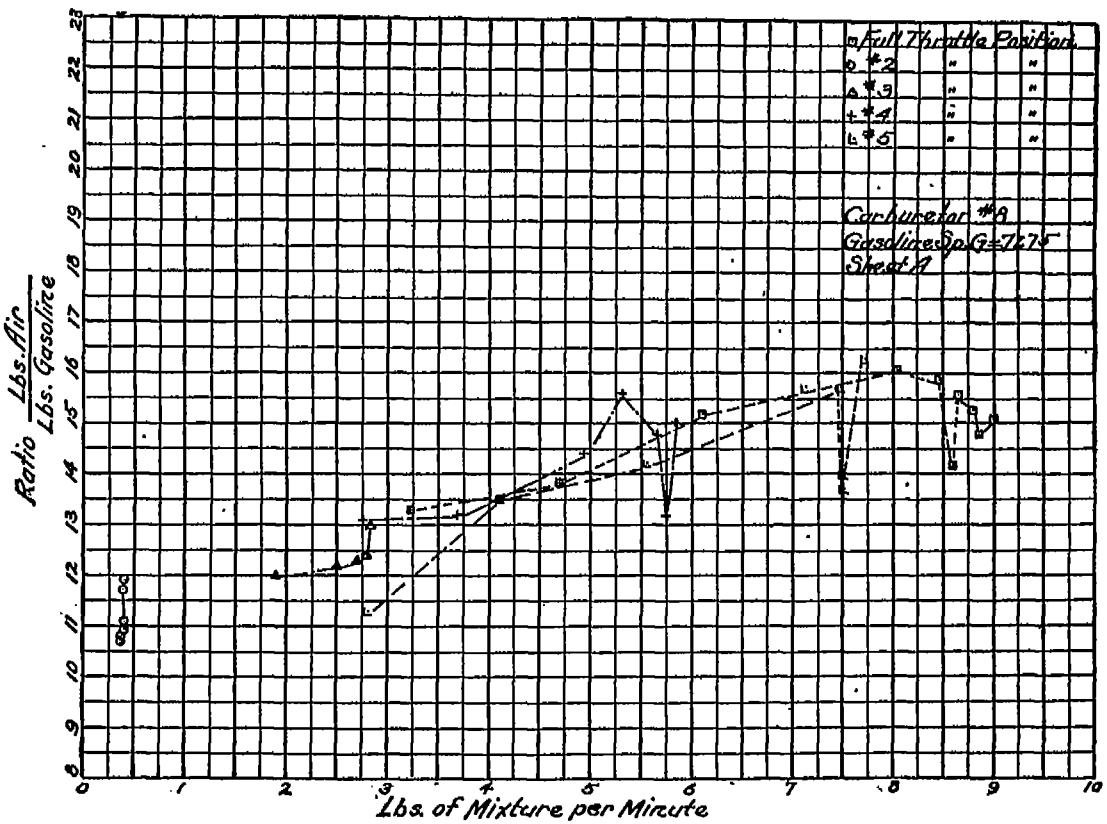
Full Throttle Position
#2
#3
#4
#5
Carburetor #A
Gasoline Sp. G=.7275
Sheet A
Ratio Lbs. Air / Lbs. Gasoline
Lbs. of Mixture per Minute

Fig. 46.

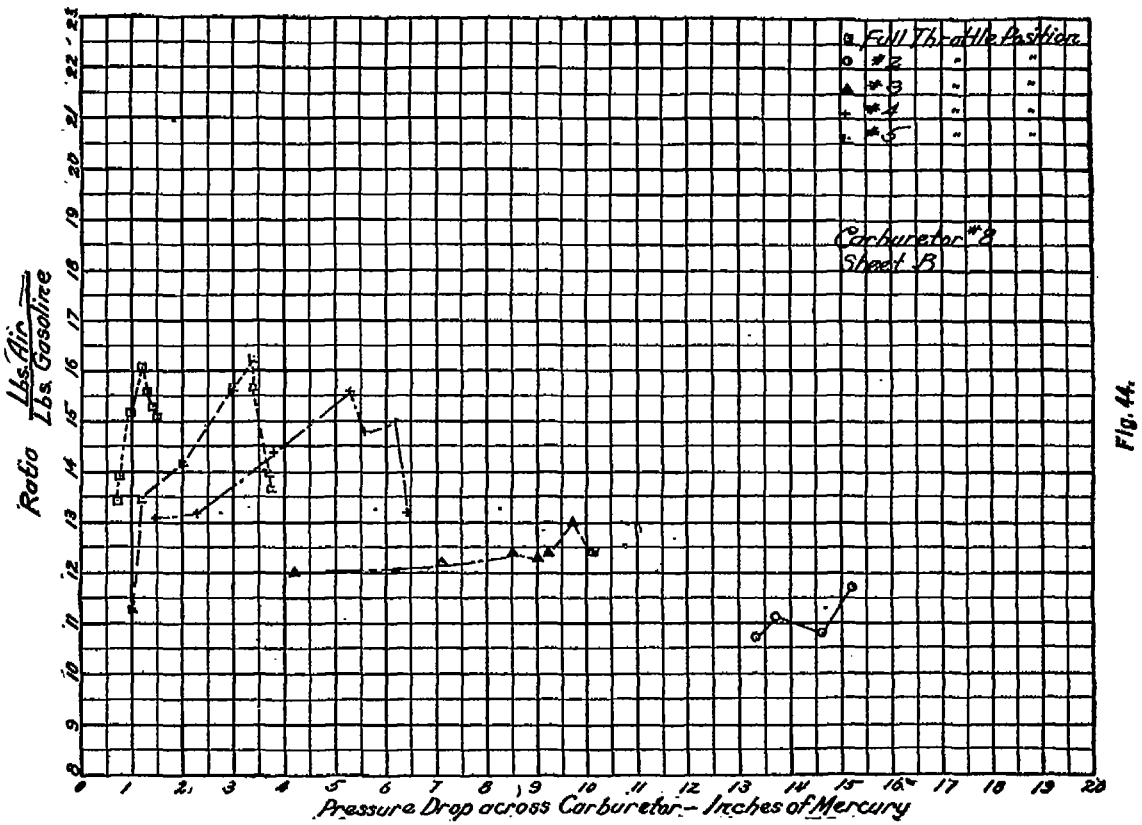
Full Throttle Position
#2
#3
#4
#5
Carburetor #8
Sheet B
Ratio Lbs. Air / Lbs. Gasoline
Pressure Drop across Carburetor – Inches of Mercury

Fig. 44.

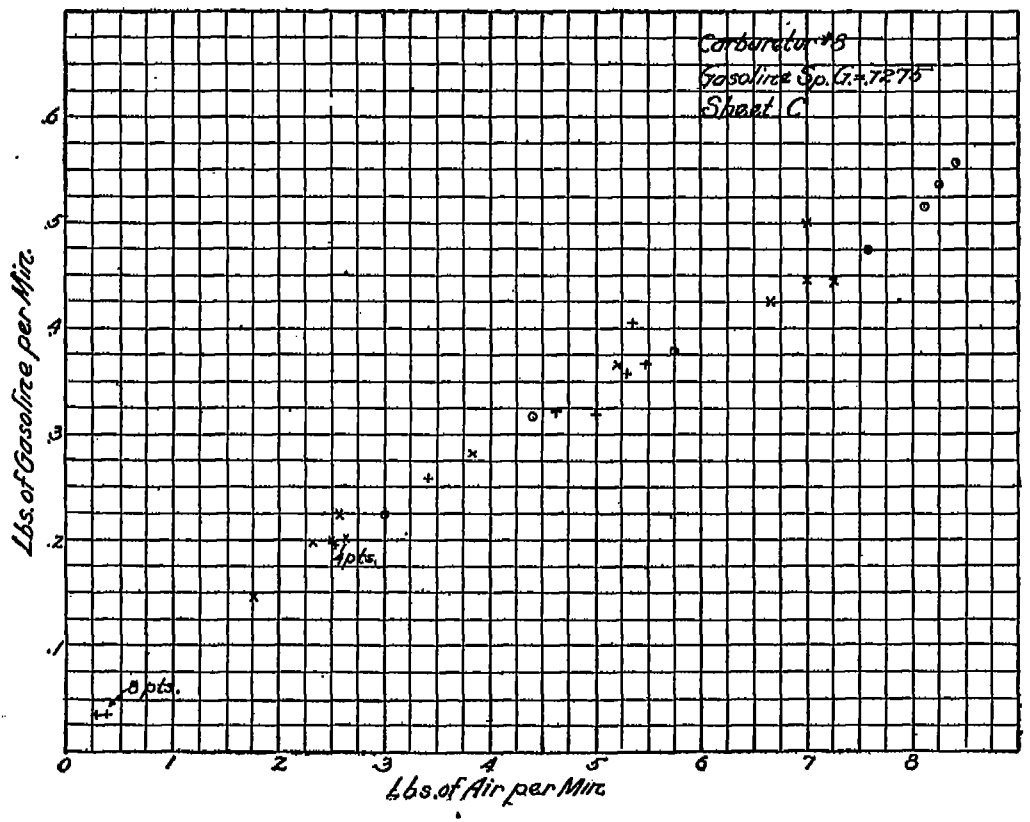
Carburetor #8
Gasoline Sp. G. = .7275
Sheet C
Lbs. of Gasoline per Min.
Lbs. of Air per Min.
.1
.2
.3
.4
.5
.6
0
1
2
3
4
5
6
7
8
8 pts.
4 pts.

Fig. 45.

(*e*) Since this is a carburetor in which the deflection of the current, due to the throttle position, can not possibly have any effect on the fuel flow (see fig. 42), and since the great differences in some of the other carburetors can only be due to the deflection by the throttle, the fact that the ratios for different throttle positions at the same flow rate agree quite closely, assumes considerable significance, but further investigations are required before this question can be conclusively settled.

(*f*) The variations in float chamber level were practically nil.

Carburetor No. 9 (fig. 46).—This carburetor has a small fixed area Venturi tube for the air inlet with a fixed area fuel spray nozzle, the flow through which may be adjusted by hand by means of a submerged needle valve. In addition it has a fixed area spray nozzle located under the hinged flap of a spring loaded auxiliary air valve. The secondary nozzle, therefore, does not act until there is sufficient suction to open the auxiliary air valve. This arrangement places the carburetor in new class 10.9.

Discussion of test results (see figs. 47, 48, and 49).

(*a*) The prints of group 2 (fig. 47) represent the idling position of the throttle, and again—the same as in other carburetors—a great variation in the mixture proportions is to be found. The air-gasoline ratio increases from 7.6 to 12.1.

(*b*) In the other throttle positions a distinct break occurs at a flow rate of about 2 pounds per minute. It must be concluded that this represents the point at which the auxiliary air valve and the secondary jet begin to affect the mixture.

(*c*) The air-gasoline ratio steadily increases at a uniform rate from about 10.5 at 2 pounds flow (fig. 47) to 16.6 at nearly 8 pounds flow, but between 1.7 pounds and 2.1 pounds it increases from 8.6 to 10.5, an increase of 22 per cent for an increase in flow of 23.5 per cent, while between 2 and 8 pounds, the ratio increases 58 per cent for an increase in flow of 400 per cent. A change in spring tension should enable the operator to reduce this excessive increase in the ratio, but the location of the secondary nozzle under the tip of the flap valve and close to the wall produced very curious and erratic results when the attempt was made to correct the adjustment. Lack of time prevented further investigation, but there is no doubt that the carburetor as furnished could not be adjusted to give a constant mixture at different flow rates, even for a single throttle position. What effects the substitution of another spring or of another secondary nozzle or the shifting of the point of the latter by bending the tube might produce, would be idle to discuss on the basis of theoretical considerations only.

(*d*) With the exception of only two or three readings the carburetor showed no irregular tendencies, and the ratio vs. flow curves (fig. 47) are fairly smooth, indicating that the auxiliary valve, the only moving part, worked freely.

(*e*) Regarding constancy of proportions for any one flow rate when passing from one throttle position to another, it may be noted that at 2 pounds per minute flow the ratios agree within 4 per cent of the mean, at 4.5 pounds within about 7 per cent, and at 7.5 pounds within less than 4 per cent of the mean ratio. These differences are

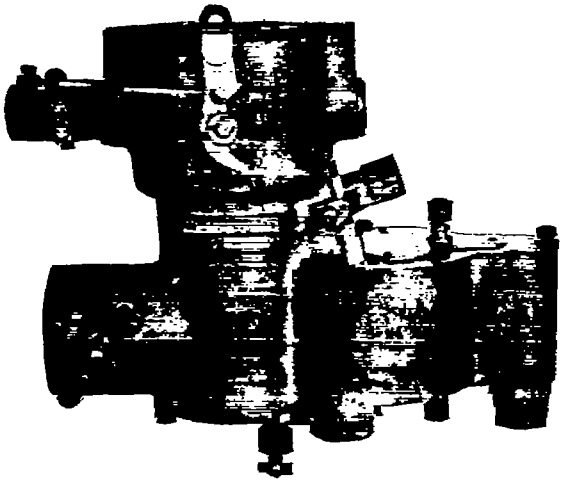

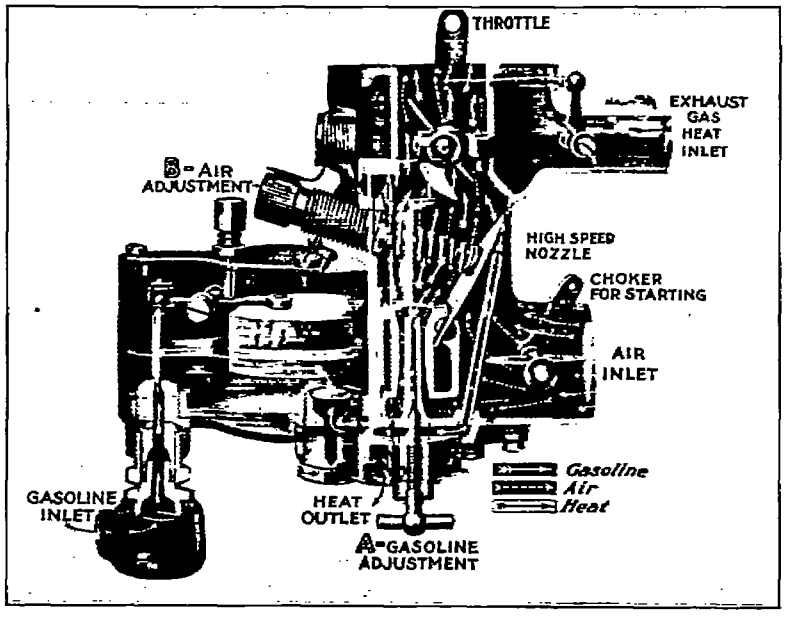

FIG. 46.—Carburetor No. 9.

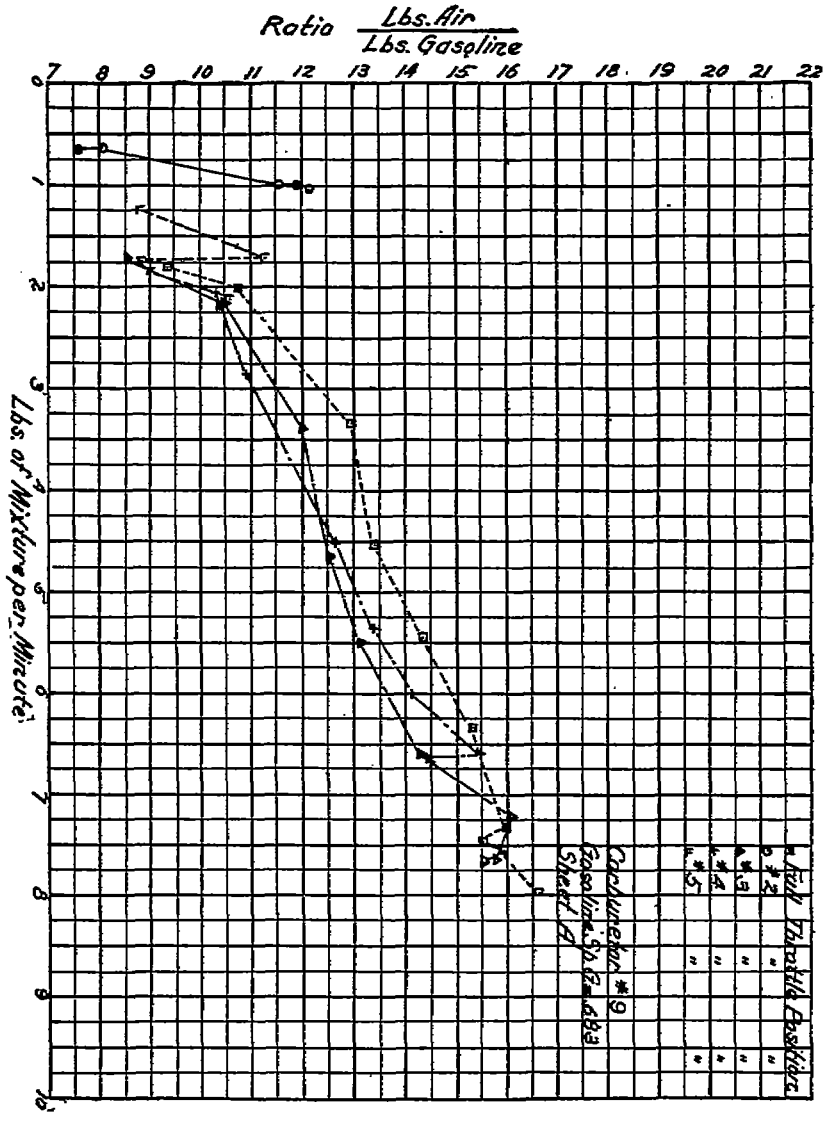
Full Throttle Position
Carburetor #6
Gasoline 60 Engine
Sheet A
Ratio Lbs. Air / Lbs. Gasoline
Lbs. of Mixture per Minute

Fig. 47.

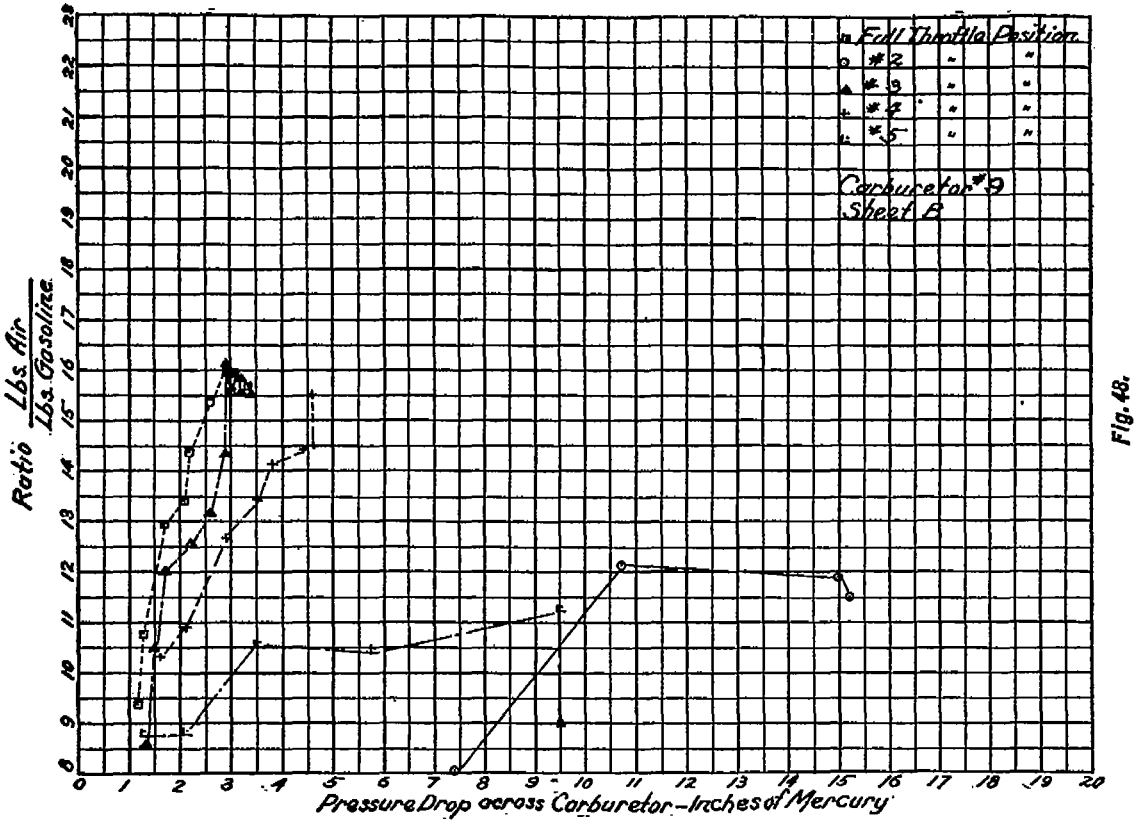
Full Throttle Position.
#2
#3
#4
#5
Carburetor #9
Sheet B
Ratio Lbs. Air / Lbs. Gasoline
Pressure Drop across Carburetor - Inches of Mercury

Fig. 48.

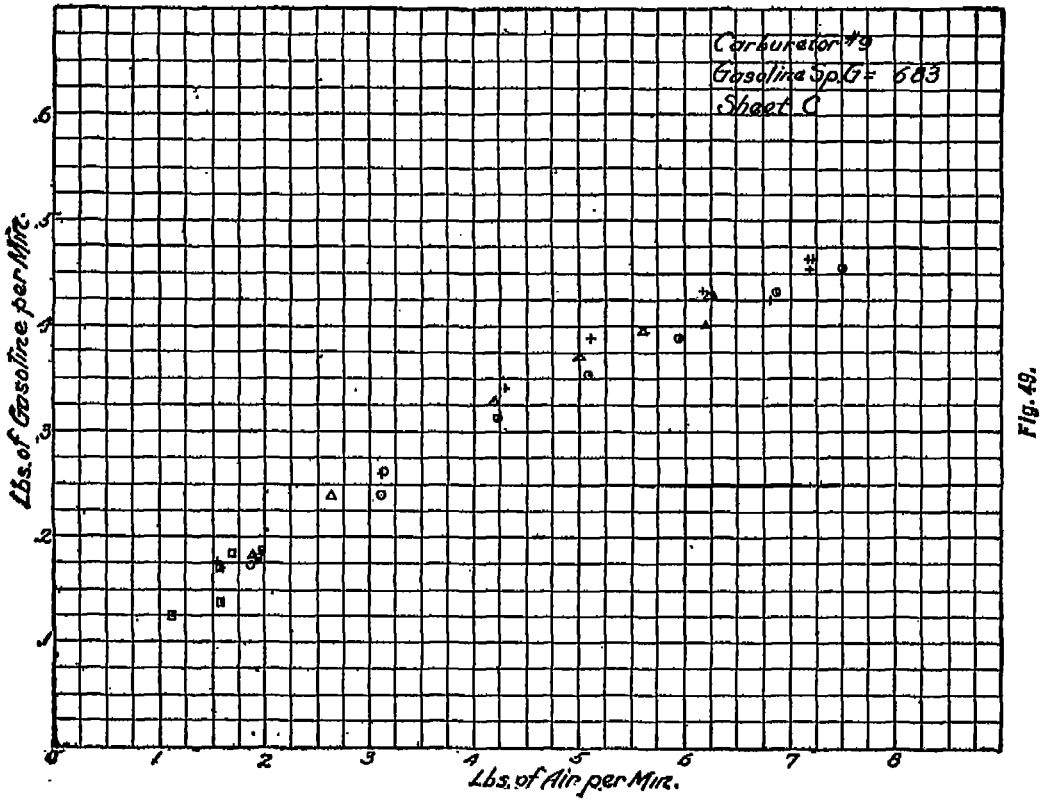
Carburator #9
Gasoline Sp.G = .683
Sheet C
Lbs. of Gasoline per Min.
Lbs. of Air per Min.
0
1
2
3
4
5
6
7
8

Fig. 49.

to be ascribed to the disturbing action of the throttle which must be quite pronounced in the case of this carburetor. (See cross section in fig. 46.)

(*f*) No variation in the float-chamber level could be observed.

Carburetor No. 10 (fig. 50).—In this carburetor the fuel issues from a number of very small holes, and a cylindrical rotary throttle with suitably shaped ports uncovers the fuel openings one by one, so the carbureter may be said to consist of a number of carburetors, each with a fixed air inlet and a fixed fuel inlet. Thus it comes under new class 9.2. An adjustable damper plate in the air passage provides hand regulation of the mixture.

Discussion of results (see figs. 51, 52, and 53): From the construction of the carburetor one would expect to find on sheet A (fig. 51) five quite similar curves, sloping gradually, even if slightly only, downward as the flow increases. The actual results as shown are disappointing as well as puzzling. Beginning with a closed throttle, the first position is represented by No. 2, the next by No. 3, and then No. 4, No. 5, and full throttle follow in the order given. Leaving aside positions No. 2 and No. 3 which represent very small flow rates only, and which show enormous variations in ratios, between 13 and 23 in one case and between 15.5 and 18.3 in the other, as was expected from the experience with the other carburetors, it might be possible to draw curves representing mean values, and these curves would be approximately parallel, and slightly sloping downward, but the fluctuations are so large, with the exception of group No. 5, that it seems idle to speak of general tendencies in mixture variation. It is especially striking that even the full throttle test which usually furnishes the most regular curves, in this case gives very erratic results, with successive ratio readings of 19.1, 16.5, 19.4, 18.2, 15.8, 15.9, 15.9, 15.6. Of course if the 19.4 and the 18.2 readings at 4.3 and 5.1 pounds, respectively were lowered to about 16, the results would at once show a most radical improvement, but there is no justification for any such procedure. A satisfactory explanation for the erratic readings given by this carburetor does not suggest itself.

The depression of far float chamber level was 0.2 at the higher flow rates, not sufficient to affect the flow appreciably.

Special tests.—After the completion of the regular tests, each carburetor was subjected to a special test the object of which was to ascertain the vacuum at the outlet of the spray nozzle for the whole range of flow rates. For this purpose the connection between the spray nozzle and the float chamber was plugged with plaster of Paris and the same was done with any outlets to auxiliary wells, etc., so that a manometer connected to the gasoline passage leading to the spray nozzle would read the actual pressure at the mouth, i. e., the vacuum which, with the float chamber head at the other end of the fuel column, determines the flow. The throttle was kept open full for these tests and air was passed through the carburetor and metered the same as during the regular tests.

The log of these tests appears on Tables IX and X and curves plotted from these readings, on figures 54–56.

These results, together with the readings of the regular tests, may be used for deducing an empirical formula for the flow in each car-

buretor, or for trying such formulæ as have been proposed for this purpose providing that the exact flow area for each flow rate is determined which is not an easy matter especially for the fuel passage, and where metering pins are used. The air flow, however, can not be calculated from these readings, since in general they do not represent the true static pressure of the air, and of course when air enters through auxiliary valves, even the true pressure at the primary nozzle would not be of any use by itself.

TABLE IX–X.—*Log of carburetor tests, Columbia University, June to August, 1916.*

CARBURETOR NO. 1.

[Aug. 2, 1910; average barometer, 30.17 inches.]

Run No.	Venturi meter.				Pressure at Venturi inlet, inches water.	Pounds air per minute.	Suction at mouth of fuel nozzle, inches water.	Pressure in box.	Temperature at carburetor inlet.	Revolutions per minute.
	Size, inches.	Left.	Right.	Height, inches water.						
1	¾	4.7	1.6	6.3	1.4	2.30	15.3	0	87	210
2	¾	8.5	5.5	14.0	3.1	3.35	21.0	0	86	310
3	¾	11.3	9.2	19.5	4.1	3.90	24.2	0	86	400
4	¾	17.7	15.1	32.3	6.2	4.92	31.2	0	86	500
5	1	6.0	6.2	12.2	2.0	5.60	36.6	0	86	600
6	1	8.0	8.2	16.2	2.6	6.30	41.0	0	88	700
7	1	10.2	10.8	21.0	3.6	7.20	42.2	0	89	800
8	1	11.2	12.2	23.2	3.6	7.54	43.5	0	89	900
9	1	12.0	13.0	25.0	4.2	7.80	44.8	0	90	1,000
10	1	12.2	13.2	25.4	4.3	7.80	46.2	0	90	1,200
11	1	12.2	13.2	25.4	4.3	7.86	41.5	0	91	1,440

CARBURETOR NO. 2.

12	¾	4.2	1.0	5.2	1.2	2.10	11.3	0	86	180
13	¾	5.3	2.2	7.5	1.4	2.50	14.0	0	86	250
14	¾	8.7	5.8	14.5	2.7	3.43	17.1	0	86	330
15	¾	10.5	7.5	18.0	3.8	3.80	18.4	0	86	400
16	¾	18.0	15.5	33.5	6.5	5.00	22.8	0	86	500
17	1	6.2	6.3	12.5	2.0	5.65	26.2	0	86	600
18	1	8.2	8.6	16.8	2.8	6.45	29.0	0	87	700
19	1	10.2	11.0	21.2	3.3	7.20	31.1	0	88.5	840
20	1	11.5	12.4	23.9	3.6	7.62	33.1	0	89.0	990
21	1	11.8	12.7	24.5	3.7	7.70	34.0	0	89.5	1,140
22	1	11.8	12.7	24.5	3.7	7.70	34.0	0	89.5	1,440

CARBURETOR NO. 3.

[July 27, 1916; average barometer, 29.86 inches.]

23	¾	4.5	1.8	6.3	1.8	2.30	7.3	0	82	230
24	¾	7.6	5.0	12.6	2.6	3.19	11.6	0	82	330
25	¾	15.7	13.2	28.9	5.4	4.67	9.2	0	82	480
26	¾	22.8	21.2	44.0	8.6	5.62	11.4	0	82	600
27	1	9.2	10.2	19.4	3.0	6.98	14.0	0	82	720
28	1	12.4	14.0	26.4	4.5	8.00	13.4	0	82	860
29	1	10.0	11.0	21.0	3.5	7.20	14.7	0	82	750
30	1	14.2	16.3	30.5	5.0	8.50	14.7	0	82	980
31	1	15.2	17.3	32.5	5.4	8.82	15.8	0	82	1,080
32	1	15.6	17.8	33.4	5.4	8.92	16.1	0	82	1,220
33	1	15.5	17.7	33.2	5.5	8.90	16.1	0	82	1,350

TABLE IX-X.—*Log of carburetor tests, Columbia University, June to August, 1916*—Continued.

CARBURETOR NO. 4.

[Aug. 1, 1916; average barometer, 29.96 inches.]

Run No.	Venturi meter.				Pressure at Venturi inlet, inches water.	Pounds air per minute.	Suction at mouth of fuel nozzle, inches water.	Pressure in box.	Temperature at carburetor inlet.	Revolutions per minute.
	Size, inches.	Left.	Right.	Height, inches water.						
34	¾	4.5	1.5	6.0	1.4	2.23	5.3	0	85	200
35	¾	7.0	4.0	11.0	2.3	2.98	9.7	0	86	295
36	¾	12.3	9.6	21.9	4.3	4.12	20.5	0	86	430
37	¾	17.8	15.2	33.0	6.2	4.92	29.1	0	86	520
38	¾	23.5	21.5	46.0	8.8	5.60	41.8	0	86	630
39	1	9.0	9.6	18.6	3.1	6.80	50.3	0	86	770
40	1	10.2	11.0	21.2	3.2	7.20	54.4	0	86	850
41	1	11.7	12.7	24.4	4.0	7.70	59.8	0	86	960
42	1	11.6	12.8	24.4	4.0	7.70	62.5	0	86	1,140
43	1	12.2	13.3	25.5	4.2	7.80	69.3	0	86	1,480

CARBURETOR NO. 5.

[Aug. 2, 1916; average barometer, 30.17 inches.]

44	¾	4.3	1.1	5.4	1.2	2.15	14.7	0	85	200
45	¾	7.0	3.9	10.9	2.3	2.98	12.5	0	85	300
46	¾	9.8	6.8	16.6	3.3	3.65	13.5	0	85	400
47	¾	16.8	14.0	30.8	5.0	4.82	13.0	0	85	500
48	1	6.0	6.0	12.0	2.3	5.53	13.5	0	86	600
49	1	8.3	8.6	16.9	2.8	6.62	14.5	0	87	700
50	1	10.5	11.3	21.8	3.3	7.33	15.6	0	87	800
51	1	12.1	13.0	25.1	4.1	7.80	15.9	0	88	900
52	1	13.2	14.3	27.5	4.3	8.10	16.2	0	89	1,000
53	1	13.6	14.6	28.1	4.4	8.18	17.5	0	89	1,152
54	1	14.0	15.1	29.1	4.8	8.30	18.5	0	89	1,440

CARBURETOR NO. 6.

[Aug. 3, 1916; average barometer, 29.94 inches.]

							Aux.	*Main.*			
55	¾	5.0	1.8	6.8	1.8	2.28	0.4	3.8	0	82	200
56	¾	7.1	3.8	10.9	2.4	3.00	0.7	4.5	0	82	300
57	¾	14.6	11.6	26.2	5.1	4.48	1.1	6.5	0	82	420
58	¾	16.6	13.8	30.4	6.0	4.78	1.5	6.6	0	82	500
59	1	8.1	8.3	16.4	3.0	6.47	2.2	8.4	0	82	650
60	1	11.0	11.6	22.6	3.6	7.40	3.0	10.4	0	82	800
61	1	12.8	13.6	26.4	4.2	8.00	3.1	10.9	0	82	950
62	1	13.2	14.3	27.5	4.6	8.10	3.2	11.4	0	82	1,100
63	1	13.9	14.8	28.7	4.6	8.26	3.2	11.4	0	83	1,400

CARBURETOR NO. 7.

[July 27, 1816; average barometer, 29.86 inches.]

64	¾	14.8	14.6	29.4	7.2	1.53	4.08	0	82	225
65	¾	9.0	6.3	15.3	3.0	3.52	10.36	0	82	350
66	¾	18.3	16.3	34.6	6.6	5.07	19.08	0	82	550
67	¾	12.4	9.8	22.2	4.3	4.20	13.60	0	82	440
68	1	7.0	7.7	14.7	2.3	6.10	24.45	0	82	650
69	1	9.2	10.3	19.6	3.0	7.00	31.25	0	82	770
70	1	11.0	12.3	23.3	3.6	7.50	38.10	0	82	900
71	1	12.0	13.5	25.5	4.3	7.95	42.20	0	82	1,010
72	1	12.1	13.6	25.7	4.2	7.95	42.20	0	82	1,120
73	1	12.5	14.0	26.5	4.4	8.10	43.60	0	82	1,200
74	1	12.2	13.7	25.9	4.3	7.97	43.60	0	82	1,240
75	1	12.3	13.8	26.1	4.2	7.97	42.20	0	82	1,400

TABLE IX–X.—*Log of carburetor tests, Columbia University, June to August, 1916*—Continued.

CARBURETOR NO. 8.

[Aug. 3, 1916; average barometer, 29.94 inches.]

Run No.	Venturi meter.				Pressure at Venturi inlet, inches water.	Pounds air per minute.	Suction at mouth of fuel nozzle, inches water.	Pressure in box.	Temperature at carburetor inlet.	Revolutions per minute.
	Size, inches.	Left.	Right.	Height, inches water.						
76	¾	4.6	1.6	6.2	1.3	2.27	7.3	0	85	200
77	¾	8.2	5.0	13.2	2.8	3.25	7.3	0	85	310
78	¾	14.2	11.5	25.7	5.4	4.45	7.4	0	85	450
79	¾	20.1	17.9	38.0	7.0	5.30	7.5	0	85	550
80	1	7.1	7.3	14.4	2.4	6.05	7.9	0	85	800
81	1	8.5	9.0	17.5	2.8	6.60	8.0	0	86	900
82	1	9.0	9.5	18.5	3.0	6.80	8.0	0	87	1,040
83	1	8.5	9.0	17.5	2.9	6.60	8.1	0	87	1,200
84	1	9.7	9.7	18.9	3.0	6.90	8.1	0	87	1,050
85	1	9.0	9.4	18.4	3.0	6.80	8.1	0	88	1,460
86	1	9.0	2.5	18.5	3.0	6.80	8.0	0	88	.....

CARBURETOR NO. 9.

87	¾	4.7	1.5	6.2	1.4	2.27	4.7	0	83	200
88	¾	7.2	4.0	11.2	2.5	3.00	7.3	0	84	300
89	¾	14.2	11.1	25.3	5.0	4.41	12.1	0	84	470
90	¾	20.2	17.7	37.8	7.0	5.28	15.5	0	84	600
91	1	8.0	8.2	16.2	2.6	6.40	19.0	0	85	700
92	1	10.0	10.5	20.9	3.4	7.12	21.5	0	85	820
93	1	10.7	11.3	22.0	3.6	7.35	23.2	0	86	900
94	1	12.0	12.8	24.8	4.2	7.80	23.8	0	86	1,040
95	1	12.0	13.0	25.0	4.5	7.82	24.0	0	86	1,160
96	1	12.1	13.1	25.2	4.5	7.85	24.3	0	87	1,440

CARBURETOR NO. 10.

97	¾	5.1	1.9	7.0	1.7	2.43	1.2	0	82	210
98	¾	7.7	4.5	12.2	2.6	2.13	3.4	0	82	300
99	¾	15.5	12.5	28.0	5.4	4.65	5.7	0	82	460
100	¾	22.5	20.5	46.0	8.4	5.72	8.0	0	83	580
101	1	8.5	8.7	17.2	3.0	6.60	11.0	0	83	680
102	1	11.1	11.6	22.7	3.5	7.50	14.8	0	84	800
103	1	12.8	13.8	26.6	4.5	8.00	16.6	0	85	900
104	1	14.0	15.0	29.0	4.8	8.30	18.2	0	85	1,020
105	1	14.1	15.1	29.2	4.8	8.32	18.6	0	85	1,150
106	1	14.1	15.1	29.2	4.7	8.32	18.6	0	85	1,440

As has been repeatedly pointed out in the discussion of the individual tests, in some cases the irregularities in the variation of the mixture ratio with flow is explained by the irregularity of the corresponding pressure readings, which in turn are due to sticking or binding of moving parts.

In carburetors Nos. 4 and 5 (see fig. 54) the curves also plainly show the points where the compensating arrangement ceases to be effective.

Carburetors Nos. 5 and 8 are intended to be "constant vacuum" instruments, and the curves on figures 54 and 56 confirm it.

No. 3 is also a constant vacuum carburetor, but the spray nozzle is directly at the point where the throttling takes place; therefore the curve figure 55 shows a gradually increasing suction with a maximum of 3 inches of water.

Carburetors Nos. 1, 2, 6, and 9 have spring-loaded auxiliary air valves and should therefore show similar relations between mixing chamber vacuum and air flow. The curves show that all four have this relation expressed by a straight linge of the equation $y=ax+b$, where y=vacuum, x=air flow, and a and b are constants. Naturally, if the curves could have been continued to the left, they would have curved off toward the origin, but the straight-line relation holds true for all except the lowest flow rates.

In the case of No. 6 carburetor separate tests were made for the primary and secondary nozzle pressures, and the two curves show plainly how the suction at the primary nozzle gives the same results as Nos. 1 and 2, but suction at the secondary nozzle begins to develop only when the flow amounts to about 2 pounds per minute; after that suction increases along a straight line. In the test of No. 9 carburetor the two nozzles were not separated. This explains why the curve is a straight line, but follows the equation $y=ax-b$, i. e., it intersects the zero pressure axis to the right of the origin.

No. 7 (fig. 55) also should give the same characteristics, since in place of the springs it has the constant weight balls. The curve shows a straight line only up to about 4 pounds. After that the suction increases more rapidly. This is probably due to the fact that in this case the pressure read on the manometer is the pressure at the throat of the Venturi tube rather than that of the mixing chamber.

The two remaining carburetors, Nos. 4 and 10, should, under the test conditions, give the characteristic curves of a carburetor with fixed air inlet and fixed fuel inlet. The actual results are as expected, only the curve for No. 10 (fig. 56) is improperly plotted as a straight line. Actually it is a curve similar to that of No. 4 (fig. 54), as inspection will show.

The great difference in the practice of the various manufacturers with respect to suction at the spray nozzle deserves mention. Assume an air flow of 7 pounds per minute, a flow rate which is certainly well within the working range of all the instruments. At this flow rate the constant vacuum carburetors have vacua of 2, 8, and 15 inches of water, respectively, while the others show 9, 12, 21, 30, 32, 40, and 54 inches of water, respectively.

SUMMARY OF TEST RESULTS.

(1) The tests performed in connection with this investigation, as has been explained before, were intended only to demonstrate the performance of modern commercial carburetors as metering or proportioning instruments. But even with this narrow limitation they are not complete; they show how the mixture proportions are affected by speed at fixed throttle and also by throttle position when the engine is running at perfectly uniform speed. They do not show the effects of a sudden change in the flow rate or of a change in barometric pressure or atmospheric temperature. Time, unfortunately, was not available for these extra tests nor for tests showing the effects of the tilting of the carburetor.

(2) While the method adopted for testing was that of varying the speed and flow rate at each of a series of fixed throttle positions

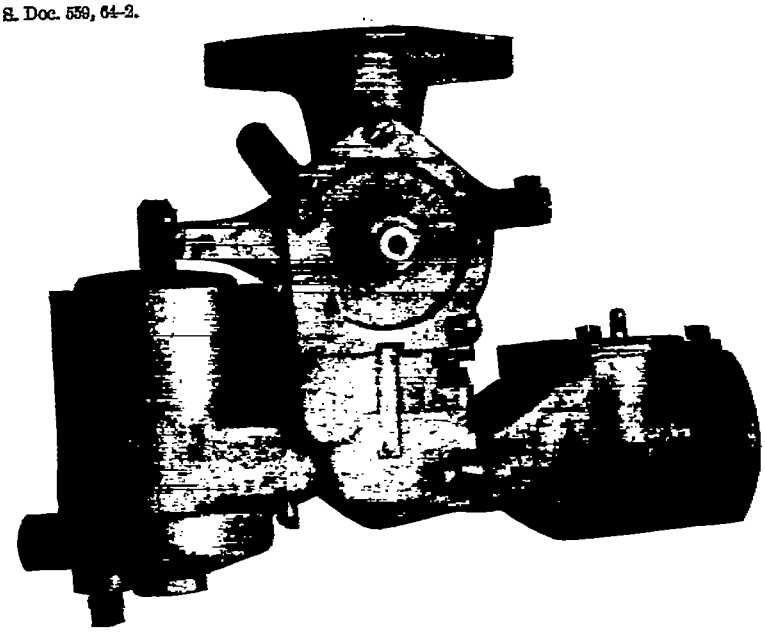

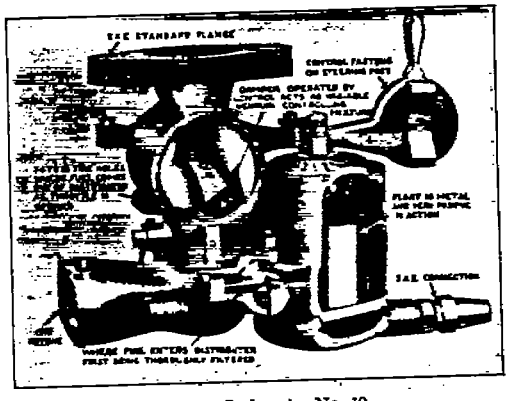

FIG. 50.—Carburetor No. 10

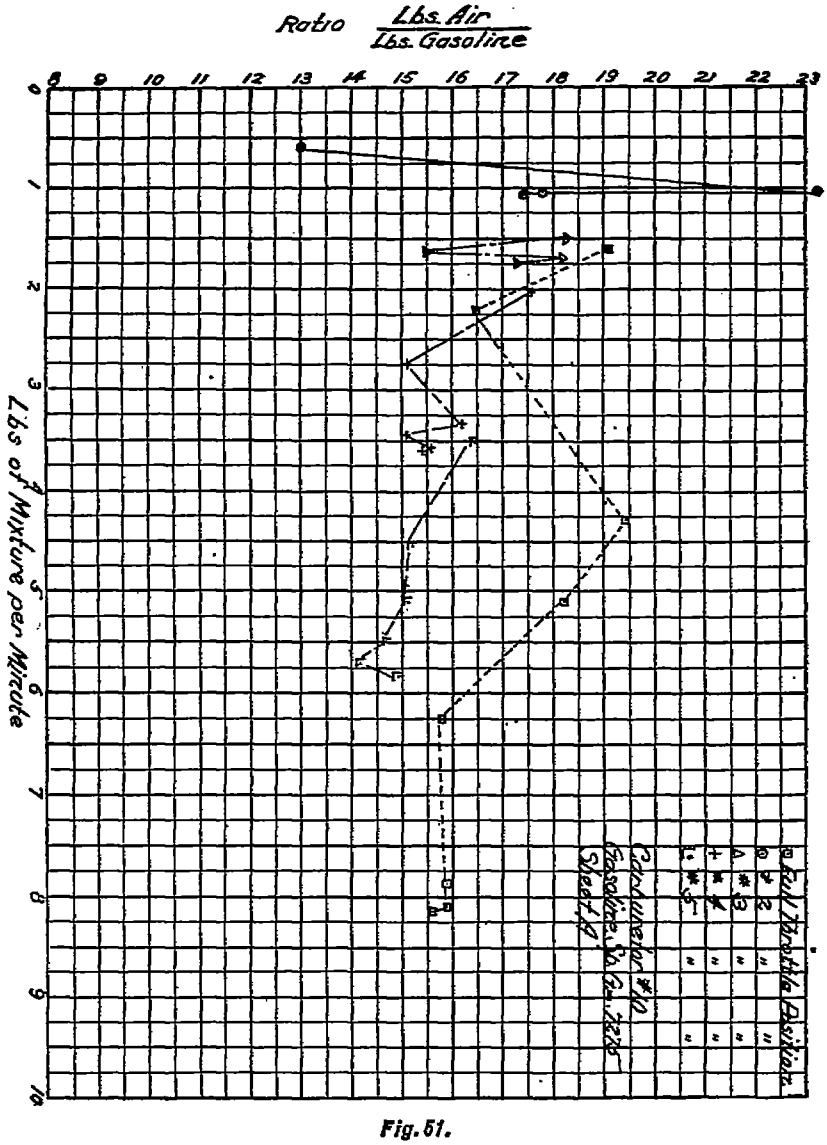
Full Throttle Position
Carburetor #10
Gasoline, 66 G. Tax
Sheet 12
Ratio Lbs. Air / Lbs. Gasoline
Lbs. of Mixture per Minute
8 9 10 11 12 13 14 15 16 17 18 19 20 21 22 23
0 1 2 3 4 5 6 7 8 9 10

Fig. 51.

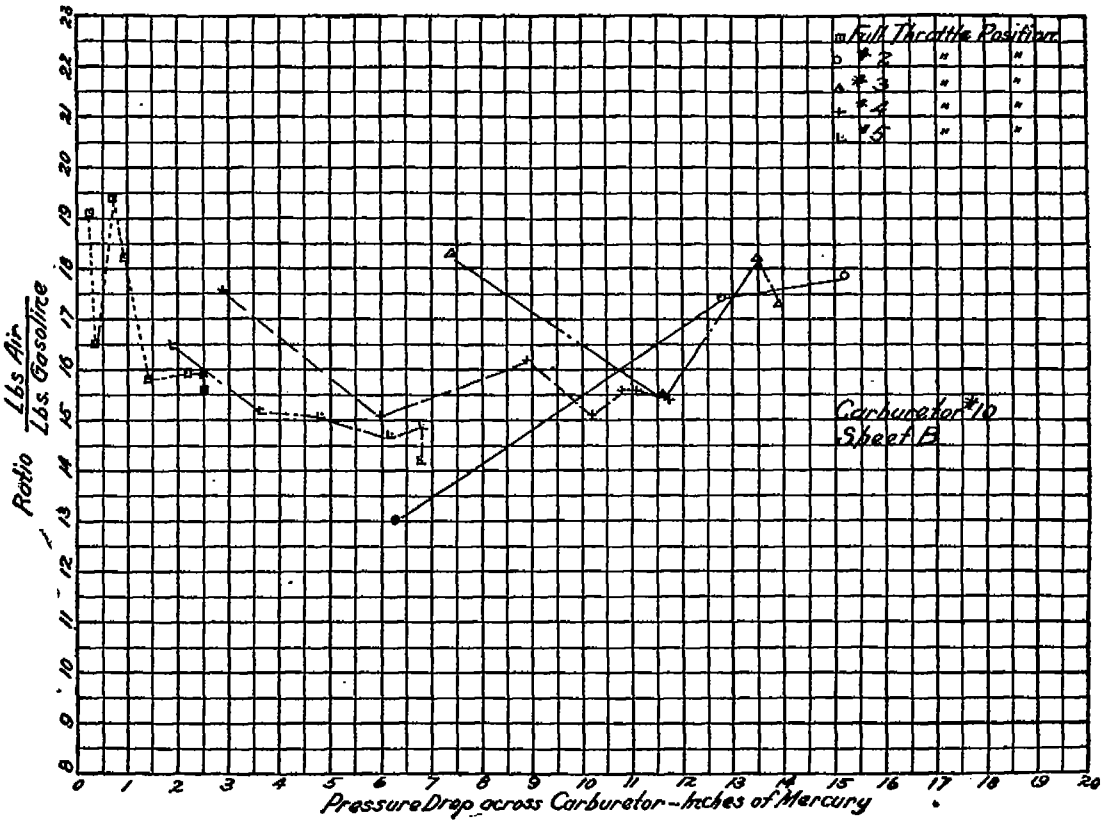
Full Throttle Position
#2
#3
#4
#5
Carburetor #10
Sheet B
Ratio Lbs. Air / Lbs. Gasoline
Pressure Drop across Carburetor – Inches of Mercury

Fig. 52.

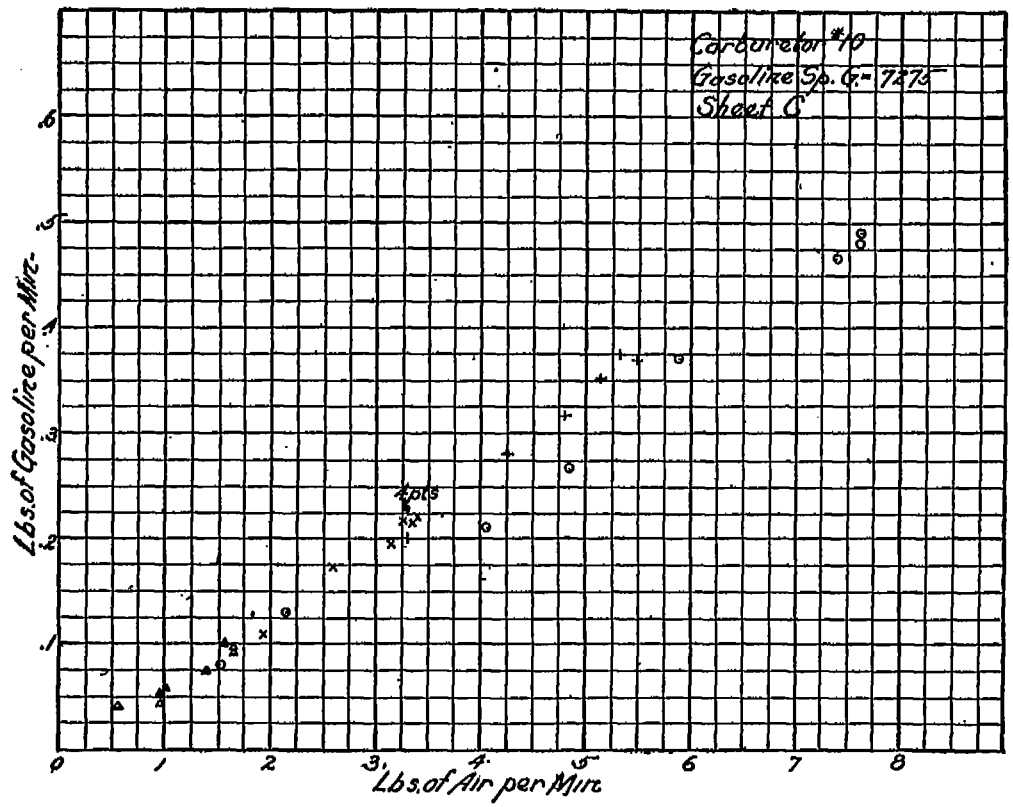
Carburetor #10
Gasoline Sp. G.= .7275
Sheet C
4 pts
Lbs. of Gasoline per Min.
Lbs. of Air per Min.
.1
.2
.3
.4
.5
.6
0
1
2
3
4
5
6
7
8

Fig. 68.

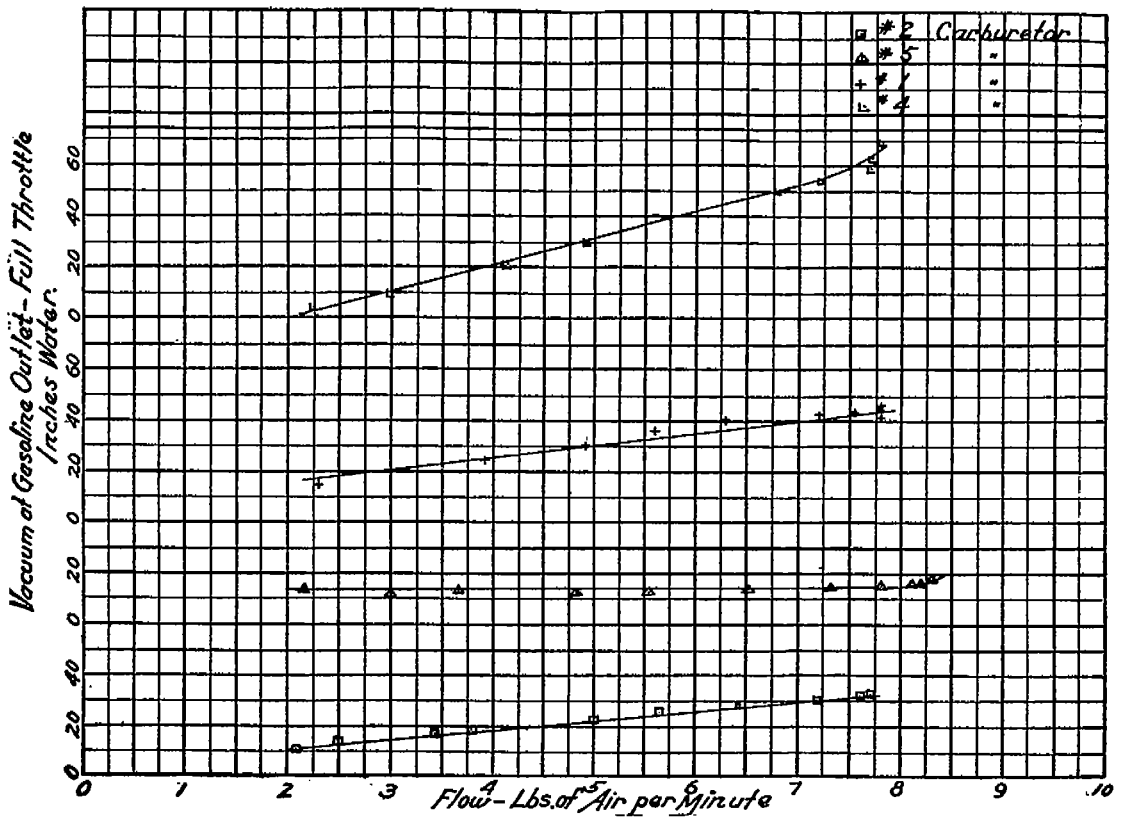
Vacuum of Gasoline Outlet - Full Throttle
Inches Water.
Flow - Lbs. of Air per Minute
0
1
2
3
4
5
6
7
8
9
10
0
20
40
60
#2 Carburetor
#5 "
#1 "
#4 "

Fig. 64.

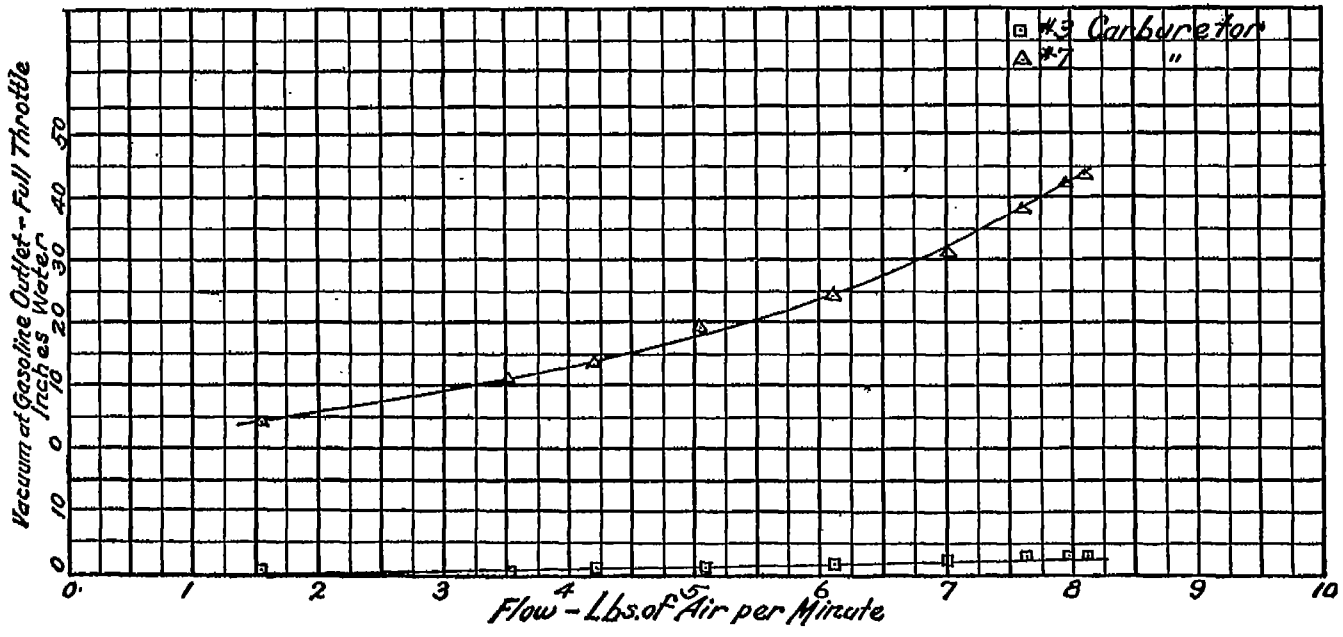
#3 Carburetor
#7 "
Vacuum at Gasoline Outlet - Full Throttle
Inches Water
0
10
20
30
40
50
0
1
2
3
4
5
6
7
8
9
10
Flow - Lbs. of Air per Minute

Fig. 55.

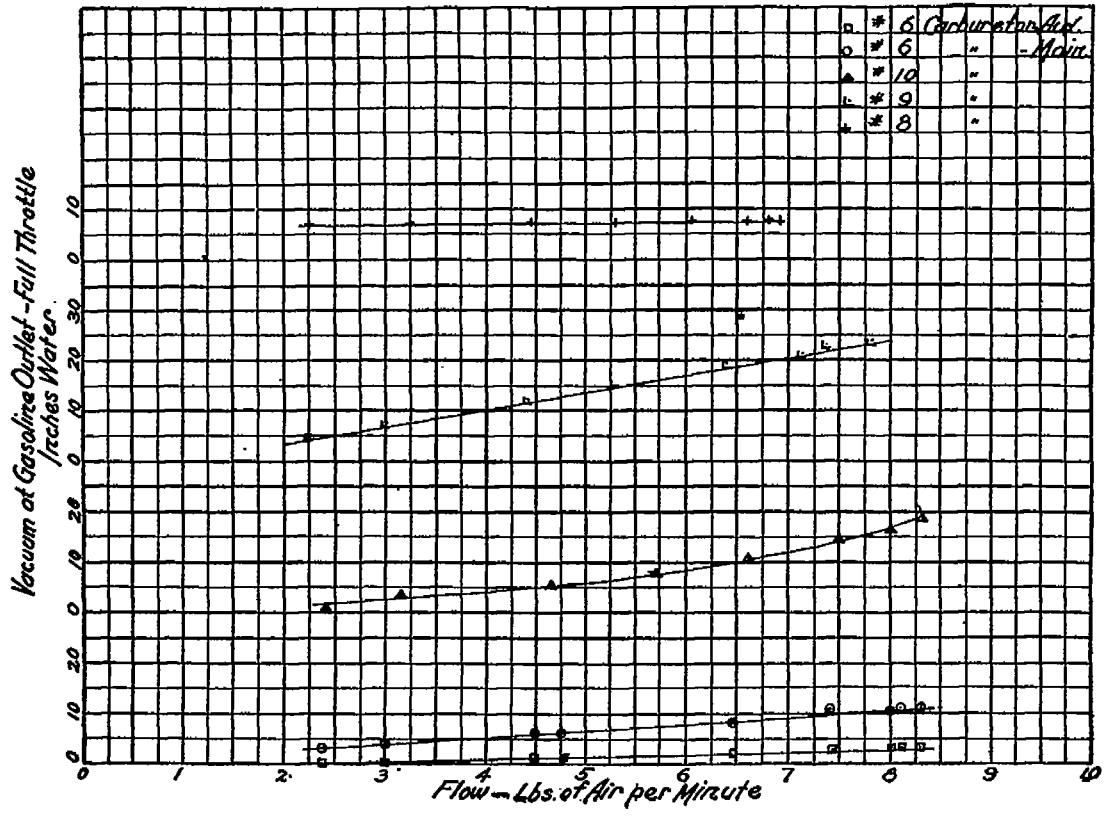
Vacuum at Gasoline Outlet - Full Throttle
Inches Water.
Flow - Lbs. of Air per Minute
0
1
2
3
4
5
6
7
8
9
10
0
10
20
0
10
20
30
0
10
20
0
10
20
0
10
□ # 6 Carburetor Aux.
○ # 6 " - Main
▲ # 10 "
L # 9 "
+ # 8 "

Fig. 56.

and the proportionality plotted with reference to flow rates, one curve for each such throttle position, it is a perfectly simple matter to connect the curves representing different throttle positions in any manner desired. The intersections will give the variation in mixture proportions when opening or closing the throttle.

(3) Inspection of these curves immediately raises the question of carburetor capacity rating in terms of flow rate. There is no reason why a manufacturer can not rate a carburetor in any way he sees fit, and there does not seem to exist an accepted standard of capacity. One report of a carburetor test speaks of 120 cubic feet per minute as the rated capacity of an 1½-inch carburetor, but no reason is given. In the light of the results of these new tests 100 cubic feet would seem to be nearer the mark than 120, since in several cases the compensation begins to fail at about 8 pounds of mixture per minute. There are many practical reasons for a reasonably definite and uniform relation between flow-rate capacity rating and connected pipe size.

(4) The importance of fixing a limit to the variation in mixture proportions that is permissible or advisable is also made clear. This question would have to be answered before the performance of any carburetor tested could be classified as good or bad, and it certainly should be known to any prospective user or designer. It would seem as if no real advancement in the carburetor field could be achieved unless and until the various functions are kept strictly separate. It does not seem right to feed a 12-to-1 mixture when a 14-to-1 mixture furnishes exactly the correct amount of oxygen for combustion. If the 14-to-1 mixture does not give as good results in a given engine as the 12-to-1, the conclusion must be that there are present some interfering influences, after the air and the fuel have been measured out. In the absence of proof that constant proportionality in combining proportions is not the best air-gas ratio for mixtures, the only scientific method is to proportion the fuel and air with the greatest possible accuracy and keep the mixture constant instead of guessing at the answer or arbitrarily making the mixture "a little richer" or leaner than it was before some operating difficulty was encountered. Then the next step would be to ascertain what is necessary so that this chemically perfect and constant mixture will give the best results in the engine.

(5) That there is anything but uniformity with respect to mixture characteristics of existing carburetors, the curves demonstrate better than any written comment. Not even the general slope of the curves is the same.

(6) The pressure drop across the carburetor is synonymous with the manifold vacuum at full open throttle, hence an important quantity, since it affects directly the volumetric efficiency, compression pressure, and negative work on the engine. For the same flow rate (about 7.2 pounds of air per minute) and at full throttle the following pressure drops (in inches of mercury) were observed: Carburetor No. 1, 2.3 inches; No. 2, 2.6 inches; No. 3, 1.5 inches; No. 4, 2.3 inches; No. 5, 1.3 inches; No. 6, 1.5 inches; No. 7, 3.3 inches; No. 8, 1.2 inches; No. 9, 3 inches; No. 10, 2.2 inches. These figures in connection with the cross section of the carburetors speak for themselves.

(7) Tests on the same carburetor, but with two grades of gasoline, gave the expected result: The use of lighter gasoline produced richer mixtures for the same air flow, but the difference is so small that it would be hazardous to give a numerical estimate, in view of the irregularities in proportions.

(8) Considering how little really scientific work has been done in connection with carburetors, it is surprising that they function as well as they do, but the road to further improvements seems clearly outlined.

(B) CARBURETOR TEST LITERATURE.

DISCUSSION OF THE LITERATURE OF OTHER CARBURETOR TESTS.

In an official carburetor competition arranged by the Prussian Government, among others, the following properties were to be investigated by tests and considered in the awarding of prizes: Fuel consumption of engine, output and flexibility of engine, time required to start engine after having stood all night in unheated shed, absence of bad odors, absence of smokiness in the exhaust and of soot in the cylinders. No lengthy discussion would be as striking as the simple enumeration of these items if one were asked to demonstrate how vital a part of the modern motor car the carburetor is; how not only power and economy of operation but also convenience and pleasure of driving depend altogether on the carburetor.

When it is further considered that the carburetor art is 23 years old, as the Maybach carburetor, the prototype of all modern proportioning flow carburetors, was introduced in 1893, it is hard to explain the incompleteness—if not complete lack—of reliable design data. One would think that to review all important carburetor tests undertaken for the purpose of furnishing such data would be a formidable undertaking, but instead of that it must be acknowledged that a careful search of the available literature will disclose less than a dozen reports of investigations that are of any real value to the designer.

In the discussion of one such paper presented before the Institution of Automobile Engineers, England, the president of the institution described the situation as follows (Proc. I. A. E., Vol. V, discussion of paper by Morgan & Wood):

> In my experience the design of the spray type of carburetor is somewhat in the same position as the design and fitting out of a sailing boat. Different men come along and move the ballast to different positions and alter and shift the sail plan about, here and there, and get different results, better or worse; but none of them get the exact results that the designer anticipated or know with any sort of certainty what effect any given alteration will produce.

These words were uttered in 1910, but they are just as true to-day, with this difference only, that in the intervening six years a greater number of men have "come along and moved the ballast and altered the sail plan," so that the results on the whole are perhaps somewhat improved, but in the meantime, also, the problem has been rendered more important, as well as more complicated, due not only to the available fuel becoming more expensive but more difficult to use.

If the tests made in connection with this report, incomplete as they are, will serve the purpose of emphasizing the necessity for more work, careful, scientific, unbiased work, the authors will be well satisfied.

A number of published reports of carburetor investigations which appear most useful at first sight lose their value, partly or altogether, on closer inspection. A report which does not give the details of the measuring appliances and methods by which the readings were obtained and the results calculated is of doubtful value, no matter what the standing of the investigator may be, since the degree of accuracy can not be judged nor can the reader know how far the character of the results has been affected by the test methods.

In this connection also the practice of publishing smooth curves only, without giving individual points or the test log, can not be condemned too strongly. Usually, also, in reports of this sort the curves are extended down to the origin or to zero flow, but no one can tell how far actual readings were carried, and this just at a flow region where the greatest irregularities occur. Another procedure which is not necessarily unscientific but apt to be misleading, and which has been referred to in the discussion of the tests, consists in unduly reducing the scale of one of the variables as compared with the other. This is apt to occur when gasoline flow is plotted against air flow.

Again, some apparently careful and valuable reports lose some of their significance when, after all kinds of other devices have been reported on, the author trots out his own personal pet and shows how superior it is to all the other creatures. As long as this refers only to some pet theory exception can not be taken, but when it is a question of a patented device which is just being put on the market it would seem to be more appropriate to let some one else report on it. No matter how distinguished a man me be, no matter how far above any unworthy suspicion, a scientific test report in which he compares different devices, all in the market and all patented and competing with each other, should not be signed by the inventor of one of the devices.

Some of the most valuable information has been derived from the work of British scientists, and the reports which were all presented before the Institution of Automobile Engineers deserve the highest praise, although some details may be criticized.

In 1907 Dugald Clerk read a paper before the institution on the principles of carbureting, as determined by exhaust-gas analysis. He examined the trials of the Royal Automobile Club. His paper and that of Prof. Hopkinson, of Cambridge University, in the same year, are important because they showed how the carburetor performance might be analyzed by means of the exhaust-gas anaylsis.

In Clerk and Burls Gas, Petrol, and Oil Engines, Volume II, page 632, a simple formula for calculating the air-fuel ratio from exhaust analysis will be found.

Two splendid investigations were undertaken by Dr. Watson in 1908 and 1909. The titles are "On the thermal and combustion efficiency of a four-cylinder petrol motor" (Proc. I. A. E., Vol. III, p. 389), and the other, "An investigation of the thermal efficiency of a two-cycle petrol engine" (Proc. I. A. E., Vol. V, p. 83). As the titles show, they were not really carburetor tests, but since they were to be as complete engine tests as facilities allowed, both air and fuel were measured, and the exhaust gases were analyzed. Thus the re-

sults, while not dealing with the performance of a modern carburetor under all conditions of flow (all tests were run at full throttle and the auxiliary air valve was fixed), are of the greatest interest as showing the relations between economy and mixture proportions and between exhaust gas analysis and mixture proportions. The tests were deficient only as far as the loading of the engines was concerned. In one case an uncalibrated fan brake was used; in the other a belted dynamo, so that in neither test could the brake horsepower be determined. Dr. Watson used an optical indicator of his own design, and all results are referred to as indicated horsepower. The air was measured by means of an orifice in a thin plate, forming the inlet to a box from which the air was drawn. The primary and the auxiliary air inlets of the carburetor were connected to the box by a pipe. A box of 19 cubic feet volume was used, but this was not sufficient to damp the pulsations of the air, so on one side of the box was an india rubber diaphragm. This is a very simple arrangement, and quite accurate if plate and orifice are made the same as those used in some reliable calibration tests, such as, for instance, Durley's experiments, so that the coefficient is known. It has, however, the disadvantage that the range of flow which can be measured with one diaphragm is very limited, since any large pressure drop must be avoided. This would mean a number of plates and orifices which would have to be exchanged when any flow rate between 120 cubic feet per minute and less than 1 cubic foot is to be measured, as was done in the new tests of this summer here reported. Of great importance in Dr. Watson's report are the graphs giving the relation between CO_2, CO, O_2, and the proportions of air to fuel.

Very interesting also, although not quite as accurate perhaps, are the tests made by Messrs. Morgan and Wood, and presented before the Association of Automobile Engineers the same year (1910) as Dr. Watson's second paper (Proc. I. A. E., Vol. V, p. 37). The purpose of the investigation was to develop a kerosene carburetor. The mixture was pulled through an automobile engine, which was driven by outside power, and then it was discharged into a gas holder for measuring. A rather risky procedure, it would seem. First, simple carburetors made up of sections of pipe and spray orifices were tested, and the characteristics of plain tube carburetors developed. Then regular carburetors were put under test, single jet with mechanical air valve, single jet with spring-controlled air valve, two and three jet and mechanical air valve, etc. The final conclusion of the authors was that a plain tube carburetor with fixed fuel nozzle of the right proportions could be combined with a constant rate of flow nozzle so as to produce a mixture of constant proportions. This would lead to a type of carburetor similar to our No. 4. Examination of the curves will show that most of them are quite irregular, although the general tendency may be evident. The individual points are given only on some of the plots. The tests were made at full throttle. Important, too, is the statement, which should be obvious, but does not seem so to many people, namely, that the tests when reproduced with the engine running under its own power gave exactly the same results.

In the discussion of this paper reference is frequently made to "surging flow" in the suction pipe, organ pipe effects, which possibly might affect the results.

In the Zeitschrift des Vereins deutscher Ingenieure a number of accurate and complete engine tests have been published from time to time, and Prof. Riedler, of Charlottenburg, has carried on a great many interesting engine investigations, but no special carburetor investigation has been found in the German technical literature except two. One, of course, is Prof. Rummel's, Aachen, Germany, famous investigation, which correctly has been called a classic of carburetor literature. Prof. Rummel conducted an extensive series of tests covering a period of three years to determine the laws of flow from carburetor nozzles. The results were first published in Der Motorwagen in 1906, and lately have been published in translation by Horseless Age, April 14, 1915. Since these experiments were not made on actual carburetors, but on nozzles only, and not in connection with an engine, they are reviewed in connection with the discussion of flow laws.

The same procedure has been followed in the case of R. W. A. Brewer, whose work would have been reviewed, together with that of the other British investigators, if it had not principally dealt with the establishing of flow laws based on the experiments of others and himself. E. Sorel's, the French engineer, valuable contributions are also treated in the last chapter.

Returning to carburetor investigations carried on in Germany, we find one and, as far as is known to the authors, the only instance where an attempt was made to determine the actual performance of existing commercial carburetors by means of unbiased competitive tests. These tests were undertaken by a commission appointed by the Prussian Government for the purpose of finding the carburetor best suited for benzol fuel. Money prizes were offered, and 14 carburetors were entered. A description of the test methods and of the prize-winning carburetors will be found in Der Motorwagon, May 31, 1914, and Horseless Age, volume 33, page 640. Unfortunately the actual results, which must be of extreme interest, have apparently never been published, probably due to the outbreak of the war. Nevertheless, it seems appropriate to call attention to the test conditions in view of the desirability of undertaking similar work in this country.

The tests consisted of two parts, a laboratory test and a road test. The bench tests were run in the laboratory of the Technische Hochschule, Charlottenburg, where the carburetors had to be attached to a pleasure car engine and a truck engine, all carburetors, of course, being tested on the same two engines. The points on which the carburetors were to be judged in the bench test were: (*a*) Maximum power; (*b*) fuel consumption at maximum power; (*c*) consumption when throttled, at R. P. M.=1,400; (*d*) consumption when throttled, at R. P. M.=800; (*e*) lowest R. P. M. at full load; (*f*) lowest idling speed; (*g*) fuel consumption when idling; (*h*) flexibility under sudden changes of load. Whether the order also represents the order of merit in judging is not clear. The exhaust was analyzed by Orsat apparatus. Also determined were the volumetric efficiency of the engine, cooling water temperature, humidity of the air, temperature of the air. All results were reduced to normal barometric reading. It was found that one of the leading carburetors could be used either on gasoline or benzol fuel without any change whatsoever. A route

extending over several hundred miles was laid out for the road tests. The points for the latter (partly quoted at the beginning of the chapter) were as follows: Consumption of benzol; output and flexibility of engine; time required to start engine after the car had stood all night in an unheated shed; absence of bad odors, of smoke in the exhaust, or soot in the cylinders; accessibility of internal parts; rapidity of conversion for operation on gasoline; and consumption of gasoline over one stage that had already been driven over on benzol.

Who can doubt that a competition of this sort properly conducted will be of incalculable benefit to the state of the art not only but to the whole industry? One only has to think of the stimulus given to the aeroplane-engine industry by the competitions that were held by the various European Governments and associations.

Coming now to the experimental work done in this country, we find that many have tried earnestly enough to solve the great mystery, but the net results, as far as the advancement of the art is concerned, are deplorably deficient. This statement, of course, refers only to the results published and not to the experimental work which has been carried on by the carburetor and automobile manufacturers and in private laboratories, and about which nothing is officially known. A great many individuals have experimented on carburetors, but in most cases either the mental equipment and scientific training of the investigator or the mechanical equipment for the carrying out of the tests, or both, were wholly inadequate to the task. No wonder then that men would come to such conclusions as this: "The investigation furnished convincing evidence that combustion is entirely without law; in other words, that it is an empirical phenomenon and to be treated as such."

A few of the serious investigations which have been found in the trade literature and proceedings of societies will now be briefly reviewed.

C. H. Taylor published in Horseless Age (Mar. 4, 1908) the results of tests made by him in order to determine correct mixture proportions for different engine speeds and throttle positions. The report is quite complete and great care apparently was used in order to obtain exact results, but the test equipment can not be accepted for a scientific investigation. The air was measured by means of an ordinary gas meter and the gasoline determined from the number of revolutions of a calibrated small triplex pump driven from the engine by friction drive. The gasoline pipe was heated by a blow torch and the supposition was that the gasoline entered the air pipe in vapor form. A two-cylinder automobile engine was used for the tests.

D. S. Tice undertook some experimental work described by him in Horseless Age, August 19, 1908, for the purpose of establishing definitely just what law or laws are followed by the discharges of several nozzle forms in actual use in carburetors. The nozzles, actually taken from carburetors, were tested by themselves, actual conditions being reproduced as far as possible, with the engine suction replaced by an aspirator. Gasoline flow is shown plotted against pressure drop. The air flow is calculated from theoretical formulæ without using a coefficient. In his conclusions Mr. Tice proposes in place of the automatic air valve as one means of compensation, "a jagged

piece of metal placed in the fuel passage in such a way that it presents a great frictional resistance to the flow of the liquid at high velocity, thus reducing the nozzle efflux," which is rather interesting in view of the fact that a similar method has lately been not only proposed but actually introduced in a carburetor. More about this will be found in the discussion of flow laws.

J. S. V. Bickford (Horseless Age, Dec. 2, 1908) constructed experimental carburetors out of glass lamp chimneys and nozzles and measured the air by means of a homemade gas holder consisting of a tinplate bell and a water barrel.

Mr. Tice's and Mr. Bickford's tests were used by H. L. Hepburn (Horseless Age, Apr. 14, 1909) as the basis for calculations on the carburetor problems.

A paper was read in 1912 before the American Society of Mechanical Engineers by George W. Munroe describing the tests he made on six commercial carburetors. The carburetors were attached to a new four-cylinder automobile engine, the load was applied and measured by means of an ordinary Prony brake. In each run power, speed, and fuel consumption were determined, but the air was not measured nor was the exhaust analyzed, so that the results are of no help in the proportioning problem. Tests were run at 10 different speeds, maximum load for each speed, and then the speed was reduced by throttling, so that the results should give a complete picture of engine and carburetor performance under all conditions of steady running, but of course this over-all performance does not assist the designer very much in tracing the reasons for good or bad results.

S. M. Udale (Horseless Age, Aug. 6, 1913) discussed the method and interpretation of exhaust-gas analysis in engine and carburetor tests. This method was first applied to automobile tests by Dugald Clerk (Proc. I. A. E., Dec. 11, 1907), as mentioned before, and undoubtedly is most helpful in the interpretation of results when considered in conjunction with air and fuel measurement, but just because the taking of samples and the use of the Orsat apparatus seems so very simple, exhaust-gas analysis is a rather dangerous thing. Only in the hands of a skilled chemist or of some one who has taken the trouble to study the subject and knows what to guard against, the Orsat or similar apparatus will furnish reliable results. It is rather significant that Mr. Udale in 1913 had to use the results obtained by Mr. Taylor, given years previous (see above), in order to illustrate some of his deductions, bearing out what was said at the beginning of this chapter about the meagerness of test data published.

The technical committee of the Automobile Club of America made a test of the "Sunderman safety carburetor," which was published in Horseless Age of October 1, 1913. At various speeds the horsepower and the fuel and air consumption were determined, and the exhaust gases were also analyzed. A Venturi meter was used for the air measurements. A number of runs were also made with the throttle valve being periodically opened and closed.

Under the auspices of the Automobile a series of road tests were undertaken, pleasure cars as well as motor trucks participating. The results were published in the Automobile, February 12, 1914, and February 19, 1914, by Mr. Herbert Chase. The gasoline was measured and exhaust gas samples were taken at prescribed points of the

route. The results together with the specifications of the cars are given in the report. In almost every case the percentage of CO when idling was very large.

At various times Messrs. F. H. and F. O. Ball have contributed the results of carburetor investigations. Thus we find articles by these authors in Horseless Age, December 25, 1907, in the same publication under the date of August 4, 1909, and finally a paper presented before the Society of Automobile Engineers and published in the Society of Automobile Engineers' Bulletin of August, 1916, all of these dealing with carburetor investigations carried on by the authors in their own laboratory. The testing equipment is only vaguely described. An engine with electric brake which could also run as motor, as well as a steam ejector, were used to draw the air through the carburetors. What kind of air-metering equipment was used is not stated except that it was "calibrated and very accurate." Many carburetors were tested, and the results are plotted as curves with the ratio "gasoline, ounces per 1,000 cubic feet as ordinates and air flow in cubic feet per minutes as abscissae." On each curve sheet the region between best ratio for high power and best ratio for high efficiency is shaded, there may be and is, of course, a difference of opinion about the numerical value of these limits. At the end of this year's paper a new two-stage carburetor is described and its performance analyzed. According to the curves it gives an absolutely constant ratio between 40 and 140 cubic feet per minute air flow. Individual points are not given. Tests are also given for a carburetor with "friction control" of gasoline. By compelling the fuel first to travel through a long thin annulus of relatively large diameter the authors claim to regulate the flow so that it will be directly proportional to the head itself instead of to the square root of it, and since, according to them, the flow of air in a carburetor with a spring loaded auxiliary air valve varies directly as the head, constancy of proportions is assured. An interesting discussion follows the paper.

The results of a diligent search of all publications to be found in the libraries of New York City are contained in the above review and it is thus seen that the private inventor or the small manufacturer who has not the means to install and maintain the elaborate testing equipment required, has almost no reliable data to help him in his work. This explains the many failures and disappointments among the great number of enthusiastic and conscientious people who have been lured into the field by the attractiveness of the carburetor problem.

REPORT No. 11.

PART VII.

CONCLUSIONS AND RECOMMENDATIONS.

By Charles E. Lucke.

1. Carburetor design has not yet emerged from the stage of invention and empiricism, but the time has arrived when it is important that scientific engineering methods should govern the practice in design.

2. There is available a surprisingly large number of different forms and arrangement of parts constituting carburetor schemes in the Patent Office records which serve as excellent material for qualitative design, to which the necessary dimensions must be applied when sufficient data have been established. (See Part IV of this report.)

3. Data are lacking on air and fuel flow in carburetor passages necessary for the determination of such dimensions as will insure the production of a specified quantity and quality of mixture. Quantitative design can not be undertaken until such data have been established. (See Part V of this report.)

4. Data are also lacking on the mixture requirements for engines to insure their best performance in horsepower and efficiency, which engine mixture requirements constitute the specifications which the carburetor must fulfill. (See Part I of this report.)

5. Experimental determination of the relation between the rate of flow of fuel and the head should be undertaken for all grades of gasoline, kerosene, alcohol, and benzol in passages of size and shape suitable for carburetors, and at all rates of flow from zero up to the maximum used. The sizes of passage should extend from zero up to values suitable for the largest gasoline engines, which, for the present, may be set at 500 horsepower, in round numbers. The effect of temperature and viscosity must also be evaluated over a range in excess of what may be encountered in use.

6. Experimental determination of the relation between the rate of flow of atmospheric air into carburetor air passages and the vacuum at any point of the passage should be undertaken for such shapes and sizes of air passages as are suitable for carburetors of the various compensating classes and for all velocities from zero up to the critical for orifices. The effect of changes in barometric and absolute pressure and of temperature on the air flow-vacuum relation should also be evaluated over a suitably wide range with reference to use.

7. The accuracy of maintenance of proportion in present commercial carburetors over working ranges of flow rates and at different throttle positions is by no means as good as it can be made. (See Part VI of this report.)

8. Additional tests on the changes in proportion of air to fuel in commercial carburetors should be made to clearly establish the influence of (*a*) sudden opening or closing of throttle; (*b*) atmospheric temperature between 120° F. and −30° F.; (*c*) air pressure from 10 to 40 inches Hg. absolute; (*d*) tilting through at least 45° from the vertical in all horizontal directions; (*e*) vibrations of such periodicity and degree as is characteristic of each typical arrangement of engine parts and for the largest and smallest sizes; (*f*) mixture pipe pulsations of the periodicity and amplitude found in typical manifolds of varying length and for all types of cylinder grouping.

9. Additional proportionality tests should be undertaken on two groups of carburetors and two types of engines. One of the carburetors should have throttle controlled compensation, and the other a compensation automatically controlled by the flow rate, independent of the throttle. One of the engines should have a load or resisting torque, independent of speed, and, therefore, the carburetor flow rate will be independent of throttle position, typical of automobiles. The other engine should have a resisting torque that is a function of speed, and, therefore, the carburetor flow rate will be more or less fixed by throttle position, typical of aero and marine conditions. These tests will clear up the question of the relative value of the two types of load, and especially for the screw propeller load—prove whether or not the throttle controlled compensation is substantially as good as the automatic, which appears to be necessary for the automobile type of load. In the test with propeller loads the propeller torque influences introduced by variable air or water currents must be evaluated.

10. The engine test to be conducted for the purpose of determining the most suitable mixture specifications should be started with mixtures that are dry and such as are most easily made by using very light gasoline of 76° Baumé or better. With such a fuel the precise effect of the proportion on both maximum horsepower and thermal efficiency should be determined for each type and size of engine now in use. Subsequently, heavier gasoline should be used, such as will yield mixtures with increasing amounts of unvaporized fuel, while the mixture proportion is first kept constant and then varied so that the effect of proportionality and of volatility or mixture wetness may be known on engine capacity and efficiency. Finally, each of the wet mixtures should be dried by heating and the effect on engine capacity and efficiency again determined. From the results of such tests the mixture specifications can be quantitatively fixed as to proportionality and quality and density with allowable limits to give any required engine performance, and carburetors can be purchased on such specifications or can be designed to fulfill them, fulfillment being determined by test.