REPORT No. 14.

In Three Parts.

EXPERIMENTAL RESEARCH ON AIR PROPELLERS.

By WILLIAM F. DURAND,

Chairman National Advisory Committee for Aeronautics.

Part I. The aerodynamic laboratory at Leland Stanford Junior University and the equipment installed with special reference to tests on air propellers.

Part II. Tests on 48 model forms of air propellers, with analysis and discussion of results and presentation of the same in graphic form.

Part III. A brief discussion of the law of similitude as affecting the relation between the results derived from model forms and those to be anticipated from full-sized forms.

INTRODUCTION.

The purposes of the experimental investigation on the performance of air propellers described in the following report were as follows:

(1) The development of a series of design factors and coefficients drawn from model forms distributed with some regularity over the field of air-propeller design and intended to furnish a basis of check with similar work done in other aerodynamic laboratories, and as a point of departure for the further study of special or individual types and forms.

(2) The establishment of a series of experimental values derived from models and intended for later use as a basis for comparison with similar results drawn from certain selected full-sized forms and tested in free flight.

The report comprises three parts, as follows:

I. The aerodynamic laboratory at Stanford University and the equipment installed with special reference to tests on air propellers.

II. Tests on 48 model forms of air propellers, with analysis and discussion of results and presentation of the same in graphical form.

III. A brief discussion of the law of similitude as affecting the relation between the results derived from model forms and those to be anticipated from full-sized forms.

The design of the aerodynamic laboratory described in the present report, with its instrumental equipment, the planning of the experimental work on the air propellers, the design of the propellers and of the equipment for their construction, together with the preparation of the report in its present form, are the joint work of the present author and of Prof. E. P. Lesley, of Stanford University. To the latter is due most of the details of instrumental equipment and the entire supervision of the experimental work since April, 1917, when the present writer was called to Washington, D. C.

REPORT No. 14.

PART I.

THE AERODYNAMIC LABORATORY AT LELAND STANFORD JUNIOR UNIVERSITY AND THE EQUIPMENT INSTALLED WITH SPECIAL REFERENCE TO TESTS ON AIR PROPELLERS.

By William F. Durand.

THE AERODYNAMIC LABORATORY OF THE LELAND STANFORD JUNIOR UNIVERSITY.

The aerodynamic laboratory at Stanford University was installed during the fall and winter of 1916–17. The immediate purpose in view was the provision of an equipment for the carrying on of an extended investigation on air propellers, the first stage of which was planned for the year 1917.

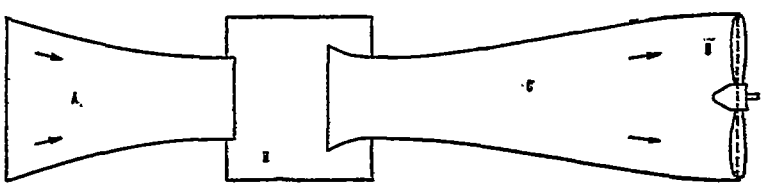

Fig. 1.

After due consideration, and with special reference to the facility of making observations, adjustments, etc., the so-called Eiffel type of wind tunnel was adopted. As is well known, this consists essentially of three elements as indicated in figure 1—the collector *A*, the diffuser *B*, and the experiment chamber *C*. At the end of the diffuser is located an exhaust fan *D*, which operates to draw the air from the diffuser and deliver it to the room in which the tunnel is located. This draft of air from the diffuser may be viewed as producing a reduced pressure in the experiment room, which is practically air-tight otherwise except for the entrance through the collector. In answer to this depression (difference of pressure between the experiment room and that in the surrounding room on the outside), the air flows as through a nozzle, in through the collector, across the experiment room to the inner mouth of the diffuser, and

thence on to the fan. The column of air thus flowing through the experiment room is then available for purposes of aerodynamic investigation.

The cross section was taken circular and the diameter of the throat was fixed at 5.5 feet as presumably suited to a propeller model 3 feet in diameter, a size large enough to give not too wide a step in passing by a law of comparison from model results to those for full-sized forms.

The principal dimensions, general arrangement, and structural details of the tunnel and experiment room are shown on the attached plans, Plates I and II, and figures 3 and 4.

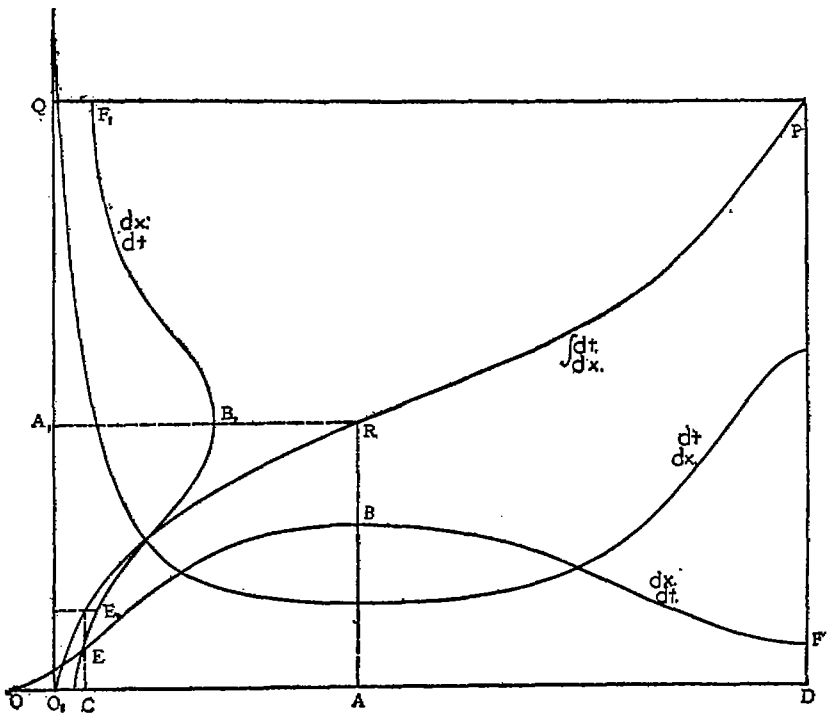

FIG. 2.

Aside from structual details, the chief problem in the design of the wind tunnel related to the forms of the collector and diffuser. These were developed as follows:

Suitable lengths were first chosen for the collector and for the diffuser. These are indicated in figure 2, at AC and AD on the axis OD. The point A represents the throat of the Venturi tube at the experiment chamber. Then to a suitable scale the ordinate AB was laid off representing the throat speed, say 60 miles per hour.

Neglecting the slight change in density along the path of the air, the entry and exit speeds will have one-fourth this value or 15 miles per hour. These are laid up as ordinates at C and D. A smooth curve was then drawn in through EBF and continued back to meet the axis OD at the point O.

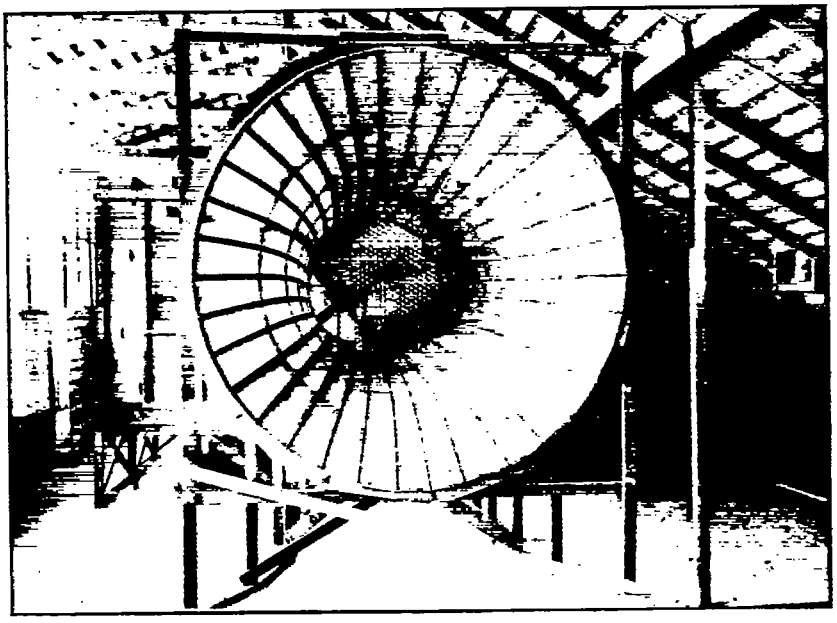

FIG. 3.

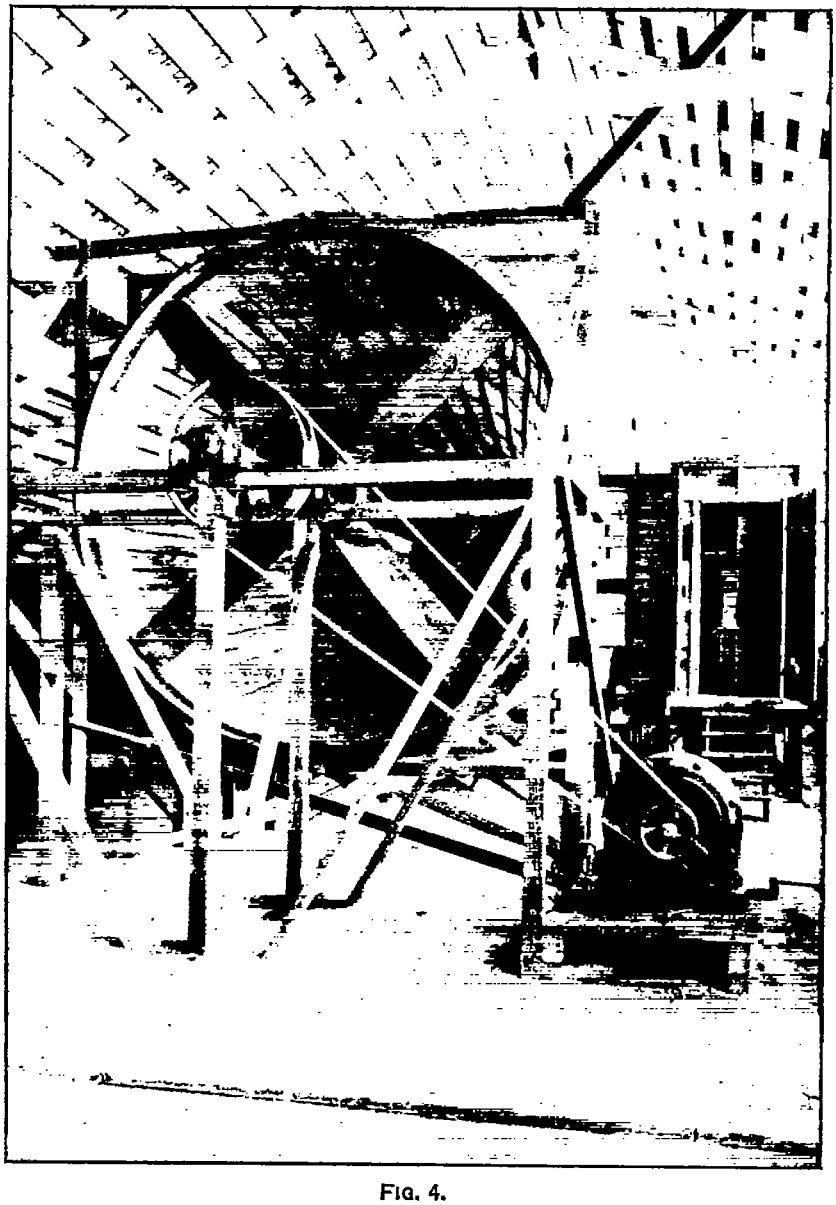

FIG. 4.

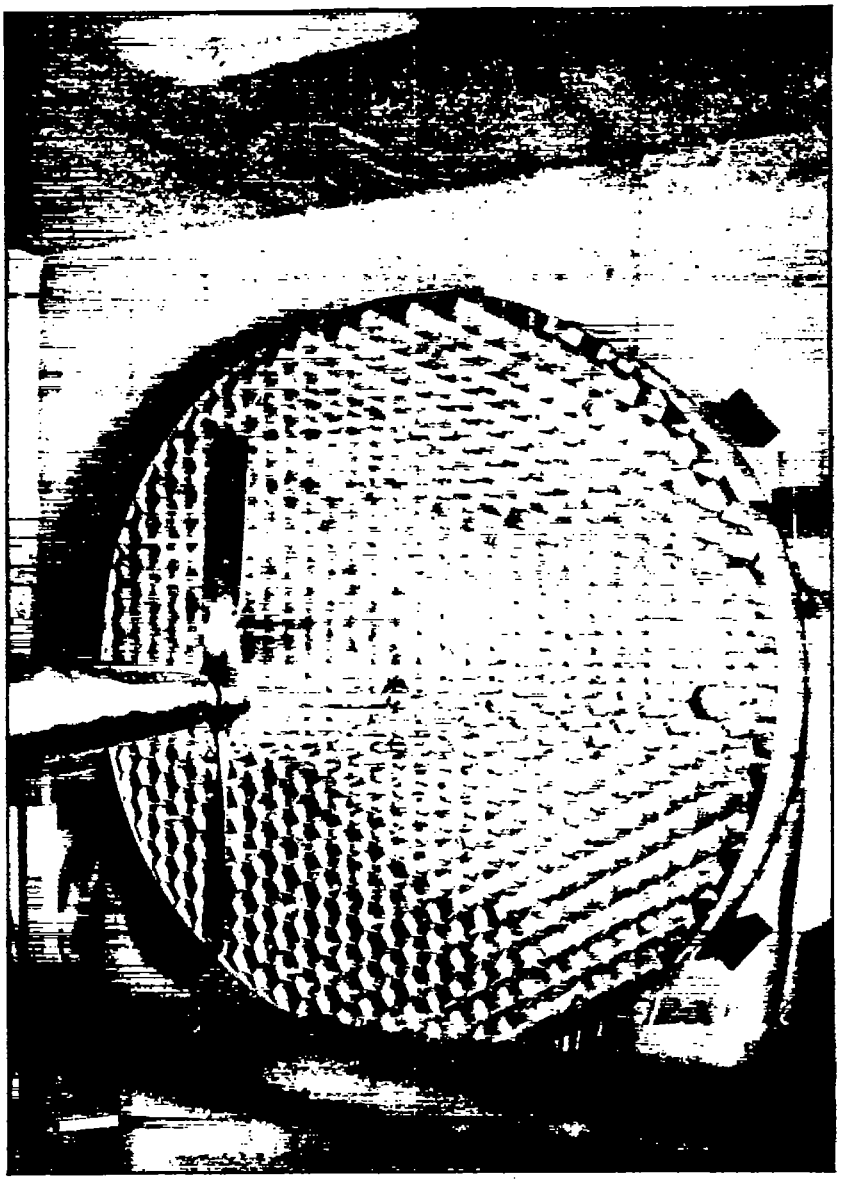

FIG. 5.

The curve $OEBF$ was then assumed as a graphical history of the air speed on distance, the part from C to A referring to the collector and the part from A to D to the diffuser. The curve OE for an axial distance OC may then be assumed to refer to the history of the velocity of the air outside the collector and during which it is accelerated from the low or inconsiderable speed of return to the speed of 15 miles per hour at C. It should be noted that the curve $OEBF$ was laid in as a smooth continuous curve showing easy and gradual acceleration and retardation as distributed along the distance axis CD. It was then thought desirable to judge the same distribution of velocity but on a time axis. To this end the transformation indicated in the diagram was effected. Considering $OEBF$ as a curve of dx/dt, the reciprocal of this curve was laid off as indicated giving a curve of dt/dx on an x axis. The integral curve of this was then run in as shown at O_1P giving x as a function of t, or t as a function of x. O_1Q thus becomes an axis of time t and the curve EBF of velocity on distance is readily transformed into the curve $E_1B_1F_1$ of velocity on time by the construction indicated. Any ordinate as AB is continued to the curve O_1P and from the point of intersection R an ordinate A_1R is drawn and from A_1 a distance $A_1B_1=AB$ is set up giving the velocity at the time O_1A_1 from the assumed origin at O_1. A similar construction for the other points gives the curve $E_1B_1F_1$ as the time distribution of the velocity in passing through the tunnel, apart from the experiment chamber. The form of this curve was again considered by the eye, and between the two a final form of curve for velocity on distance was chosen. Again neglecting change in density, these values of the velocity serve to determine the cross sections of the tunnel as compared with the section at the throat, 5.5 feet diameter.

Again considering the collector as a large nozzle into which the air is flowing as the result of a reduction of pressure in the experiment chamber and under the well-known laws for the flow of gases, it was found that the changes in density involved were too small to introduce any sensible change in the law of the distribution of velocity for the section areas assumed, or in the section areas for the velocities as shown by the accepted curve.

In this general man er the curves for the two parts of the tunnel were determined. Actually, of course, the width of the experiment chamber intervenes at the throat point A, but this fact does not introduce any difference in the character of the curves as showing the presumptive history of the wind velocity on its way along the collector and the diffuser.

At the end of the diffuser and just before reaching the propeller exhaust fan, the form of the diffuser was slightly modified by bringing the curve of cross-section areas in slightly so that the areas are sensibly uniform just before reaching the fan location at the exit end of the diffuser.

In order to secure the desired uniformity in flow at the entrance into the chamber from the mouth of the collector, a honeycomb structure was built in the delivery end composed of hexagonal cells 3 inches in diameter and 10 inches long (fig. 5). These are of builders' roofing tin and are soldered at the edges forming a stiff and true structure with thin walls and presenting the minimum resistance to the flow of the air.

In order the better to collect the air at the entry end of the diffuser, an inward projecting flaring rim was fitted as shown in the drawings.

PROPELLER FAN.

The exhaust fan at the outer end of the diffuser is of the propeller type, 4 blades, 11 feet in diameter and with a mean pitch of approximately 5.3 feet. The pitch is distributed on the Drzewiecki system assuming an advance of 4 feet per revolution with an angle of incidence of 3°. This gives values of the pitch on radius as shown in Table 1. The form of the blade contour, shape and character of blade sections, and mode of construction are all sufficiently shown by the drawing, Plate III.

TABLE I.—*Dimensions of fan propeller.*

Radius.	Pitch.	Width of blade.	Maximum thickness.
Feet.	*Feet.*	*Inches.*	*Inches.*
1.0	4.50	11.0	2.50
1.5	4.60	11.5	2.05
2.0	4.74	11.8	1.66
2.5	4.88	12.3	1.55
3.0	5.05	12.3	1.35
3.5	5.24	12.3	1.25
4.0	5.40	12.3	1.07
4.5	5.56	12.3	.90
5.0	5.72	12.0	.75

The propeller fan is driven through a belt connection from a 20-horsepower constant-speed induction motor. Such changes in wind speed as are desired in the program of propeller tests are obtained by changes in the size of the drive pulley on the motor shaft. The general plan of the propeller tests contemplates sensibly constant wind speed for any given run of tests and variable revolutions of the test propeller. This permits a constant motor speed for the fan propeller for any given run of the model propeller with variations in slip and other conditions secured by varying the revolutions of the model propeller. In the actual tests as reported later, the runs were made approximately at two wind speeds, approximately 30 miles per hour and 40 miles per hour and corresponding approximately to 220 and 310 revolutions per minute of the fan propeller. In order to secure extreme slips, with the power available, certain propellers were also run with a wind velocity of about 20 miles per hour.

MISCELLANEOUS DETAILS OF CONSTRUCTION.

No attempt will be made to give full structural details of the equipment. These must in any case be determined largely by the special circumstances of the case. A few of the more important structural features may, however, be noted.

The form of the collector and diffuser tubes was determined by circular frames made by nailing up a double ring of seven-eighths inch board segments, sawn to the proper curvature on one side, thus forming a strong ring of wood 1¾ inches thick. These rings were then fastened to uprights made of 2 by 4 inch scantling spaced about 2 feet between centers and so adjusted vertically as to line up with the axis

of the tunnel about 8 feet 9 inches above the floor of the room. These circular rings spaced out in this manner and each of appropriate diameter, give thus a series of transverse sections of the tunnel. The next step was to run longitudinal battens seven-eighths inch thick by 2 inches wide along the inside of these rings spacing them equally around the circumference. These battens were spaced about 6 inches between centers at the small end and double that amount, or 12 inches, at the large end. This entire framework when set up, cross braced, stayed to the building, roof and floor, made a very stiff and secure skeleton on which to lay the inner covering forming the shell of the tunnel itself. This covering was of a good quality of heavy cotton sheeting laid on and stretched with care and secured along each longitudinal batten by running on the inside a small airplane batten approximately one-fourth inch thick at the center by three-fourths inch wide, thus holding the fabric down on the large battens.

The fabric was then treated with a standard airplane wing "dope" (celluloid dissolved in acetone), varnished and rubbed down to a smooth finish. At the propeller-fan end for a distance of about 4 feet the number of longitudinal battens was doubled and for a distance of 1½ feet the inside of the tunnel was covered with galvanized sheet iron in order to give necessary stiffness in the immediate vicinity of the tips of the blades of the fan. This general procedure gave a tunnel with a smooth, true and fair surface, conforming to the law of cross-sectional areas as determined, and, as later test showed, stable and without sensible vibration or disturbance under the highest wind velocities employed.

The experiment room was made of matched boarding laid on the inside of joists and studding spaced about 18 inches between centers. The highest wind speeds contemplated were not much above 60 miles per hour, and with a reasonable coefficient of flow through the collector tube this would require a reduction of pressure in the experiment room not much exceeding 10 or 12 pounds per square foot. This is a very moderate load, and no trouble was experienced in carrying it with ordinary framing covered with the matched boarding, as indicated. To give light in the experiment room, two window sashes were fitted and the glass was reinforced on the inside with supports, reducing the size of pane to the equivalent of about 9 by 10 inches.

The room was made practically air-tight by papering on the inside with heavy builder's paper laid on with a specially heavy paste. For entry and exit an airlock was provided with doors closing on suitable packing strips and fitted with self-adjusting hinges, allowing close contact between door and packing. With this general character of construction, the experiment room was readily made substantially air-tight and of strength sufficient to carry the load due to the excess pressure of the outer air above that maintained in the chamber.

SPECIAL EQUIPMENT.

The special equipment for propeller testing comprises the following items:

Thrust dynamometer.
Torque dynamometer.
Revolution counter.
Air-speed meter.

(1) THRUST DYNAMOMETER.

The general arrangement of this apparatus is shown in the drawing, Plate IV, and will be clear with a minimum of textual description. The general form of the apparatus was so designed as to place the propeller approximately 1½ diameters forward of any sensible obstruction in the path of the air stream, and even here the standard is given a sharp forward and after edge and stream line form in order to minimize any possible reaction on the propeller itself.

The propeller is carried on the forward end of a shaft 1¼ inches in diameter, which runs in ring oiling, cylindrical, bronze bearings. This shaft is driven without longitudinal constraint through a yoke at the rear end having hardened steel flat longitudinal surfaces which engage with small ball-bearing steel rollers on a companion yoke carried by a bevel gear. This bevel gear runs on ball bearings outside the hub, which is bored to provide freedom from contact with the propeller shaft. The driving motor, a 7.5-horsepower direct-current motor is placed well over at the side, entirely out of the wind stream and drives the propeller shaft through bevel gearing and the yokes mentioned. In this manner the propeller shaft is subject to angular compulsion only so far as the motor drive is concerned. It is entirely free to move longitudinally as may be determined by the other forces in play. These other forces are the pull (or thrust) due to the propeller itself and some form of weighing or measuring device calculated to control and balance such pull (or thrust). To this end the propeller shaft is furnished with two ball-bearing thrusts which connect through hardened-steel knife-edges with a vertical lever as shown in Plate IV. This lever is attached to a shaft which extends outside the standard, well beyond the wind stream where it carries a horizontal scale beam with suitable weights. An adjusting weight in the casing serves to adjust the center of gravity of the device for sensitiveness of movement, and suitable stops control the range of travel of the vertical arm, and hence the horizontal travel of the propeller shaft.

This arrangement furnishes a sensitive and reliable means of measuring longitudinal forces developed by the propeller and without constraint due to the motor drive. The frictional forces involved when the shaft is in rotation are so small as to be quite negligible in comparison with the propeller forces involved but even these, small as they are, may readily be eliminated by suitable calibration.

(2) TORQUE DYNAMOMETER.

The general arrangement of the torque dynamometer is shown in Plate V. The motor shaft is extended to the casing of the thrust dynamometer stand and is cut for the insertion of a special coiled spring. The torque on the motor shaft is then measured by the torsion of this spring. To measure this torsion two fiber disks are fitted to the shaft, one on either side of the spring, actually at A and B, as shown. These disks carry a narrow metal strip on the edge to serve as an electric contact. The contacts are electrically connected to the shaft and hence to each other. A fixed brush resting on the face of the disk A is carried by the dynamometer frame. From this brush is led an electric conductor, first to a battery, then to a telephone receiver, and then to a second brush mounted over the disk B, as shown in figure 6. It is clear that if the contacts on the disks pass

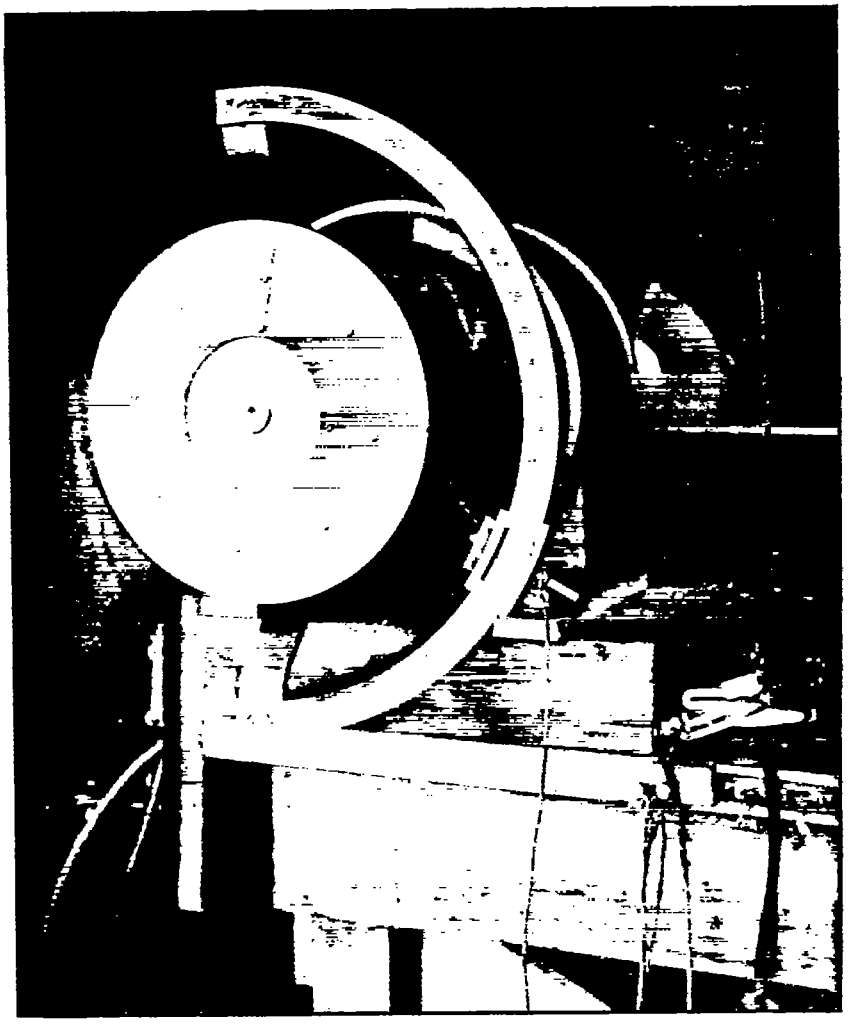

FIG. 6.

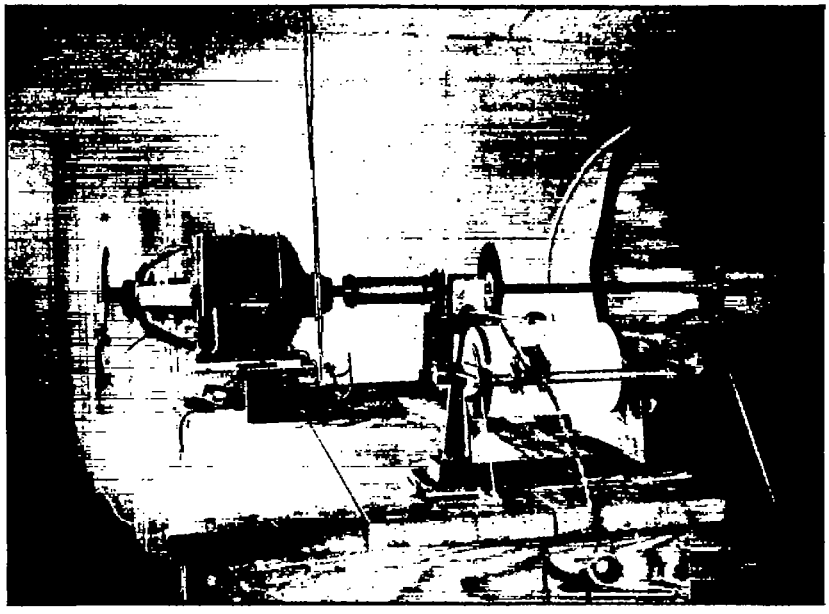

FIG. 7.

under the brushes simultaneously the circuits will be closed for the instant and a click will be heard in the telephone receiver. If they do not pass simultaneously, the circuit will not be closed and no click will be heard. Suppose then, with no torque on the shaft, the brush carrier at B is so adjusted as to give simultaneous contacts and a click in the receiver is heard; then with a load thrown on and a resultant torque the spring will twist, the contacts will no longer be simultaneous, and no click will be heard. Then the brush holder at B can be moved around to a point where the contacts will again be simultaneous and the click will be picked up again. Obviously the angle through which the movable brush holder is carried in order to thus compensate for the twist in the drive spring will measure the angle of spring torsion, and thus by suitable calibration, as described later, is readily translated into torque moment.

(3) REVOLUTION COUNTER.

The revolutions are counted by the movement on a drum, geared down by double worm-gear drive and so adjusted in diameter that 1 inch of travel on the face of a paper strip carried on the drum is just 50 revolutions. The drum is appropriately mounted on a frame with pencil carrier and with electric connection to a seconds beating pendulum. In operation the drum revolves and the pencil resting on the paper draws a line with jogs introduced by the click at second intervals. A given length of time is thus translated into revolutions and the revolutions per minute thence readily determined. A general view of this apparatus is shown in figure 7.

(4) AIR-SPEED METER.

The ultimate measure of air speed was based on the Pitot tube. The type employed is that made by the American Blower Co. and known as the A. B. C. tube. In this type the static pressure is indicated through air holes of about 0.02-inch diameter. Exhaustive test for this pattern of tube has indicated that its coefficient may be taken as sensibly unity, and for all experimental work, as described later, such coefficient has been assumed. It is, however, not convenient to make, in connection with each observation, a series of Pitot tube readings on air velocity, and to avoid this a series of careful determinations were made between the depression (difference in pressure outside and within the experiment room), considered as an air-pressure head, and the resulting velocity at the propeller location within the experiment room. This relation measures in effect the efficiency of the collector and honeycomb baffle, viewed as an orifice. The relation thus developed was as follows:

$$\text{Velocity head} = 0.876\ (P_1 - P_2)$$

where P_1 and P_2 denote the pressure heads without and within the experiment room.

The lost energy indicated by the difference between this and 100 per cent is distributed presumably among the following items:

(1) Friction resistance of collector surface.
(2) Resistance due to honeycomb baffle.
(3) General turbulence.
(4) Some slight spreading of the stream at the propeller location, with lower velocity as compared with that just at the delivery end of the collector.

With this relation between air velocity and experiment chamber depression assumed, a sensitive pressure indicator showing the pressure head between the experiment chamber and the surrounding room serves as an instantaneous air speed indicator.

Such pressure indicator is secured by the device shown in figure 8 and weighing to one-hundredth of a pound per square foot. The device as shown consists of two manometriccells carried each on opposite ends of a sensitive balance. The lower ends of the cells dip under coal oil, the space above the liquid being connected in one case to the air in the experiment chamber and in the other to the air in the surrounding room. The zero position of the scale is determined with both cups connected to the outer room. With one connected to the experiment room, the balance becomes disturbed, and the weights added to restore equilibrium furnish a direct measure of the depression within the experiment room. These indications calibrated against the Pitot tube measures of speed give then the direct relation desired between the measure of the depression and the air speed at the propeller position. The weights for the balance were of such mass as to give readings of pressure directly in pounds per square foot. These readings are independent of the fluid used. Coal oil was selected, as it kept the cans wet and there was no variation in the meniscus.

TESTS AND CALIBRATIONS OF APPARATUS.

AIR PROPELLER.

No matter what the type of air tunnel, the circuit may be considered as closed. If the circuit is complete and such as to hold the air under restraint throughout the entire round, the closed character is evident. If as in the Eiffel type the air is delivered to one end of a room and drawn from the other, the return outside the tunnel may be viewed as through the room. The room may furthermore be considered as of any size, and in the extreme case we may suppose it infinite in dimension, in which case the air may be considered as delivered at one point and drawn in at another.

From this viewpoint the problem is, therefore, that of establishing and maintaining a continuous flow of air in a closed circuit. The energy required will then be obviously the energy dissipated in the circuit. If no energy were so dissipated, the air circuit once set up would continue indefinitely. There is, however, a continual dissipation of energy in the form of turbulence due to surface resistance and unavoidable formation of eddies and irregular turbulent motion. This loss the fan or its equivalent must supply.

In considering the operation of the fan we may most conveniently compare the power actually required at the fan with the kinetic energy in the air flowing through the throat of the circuit. This gives then a comparison between the energy dissipated in the total circuit including the fan and the kinetic energy in the air at the throat.

Assuming normal atmospheric pressure and temperature in the outside room, and with due allowance for the slightly diminished density at the collector delivery, we find for the kinetic energy at this point the values shown in Table 2, column 3, while test of actual fan input showed the values as given in column 4. These values indicate for the speeds employed a relation given substantially by the following:

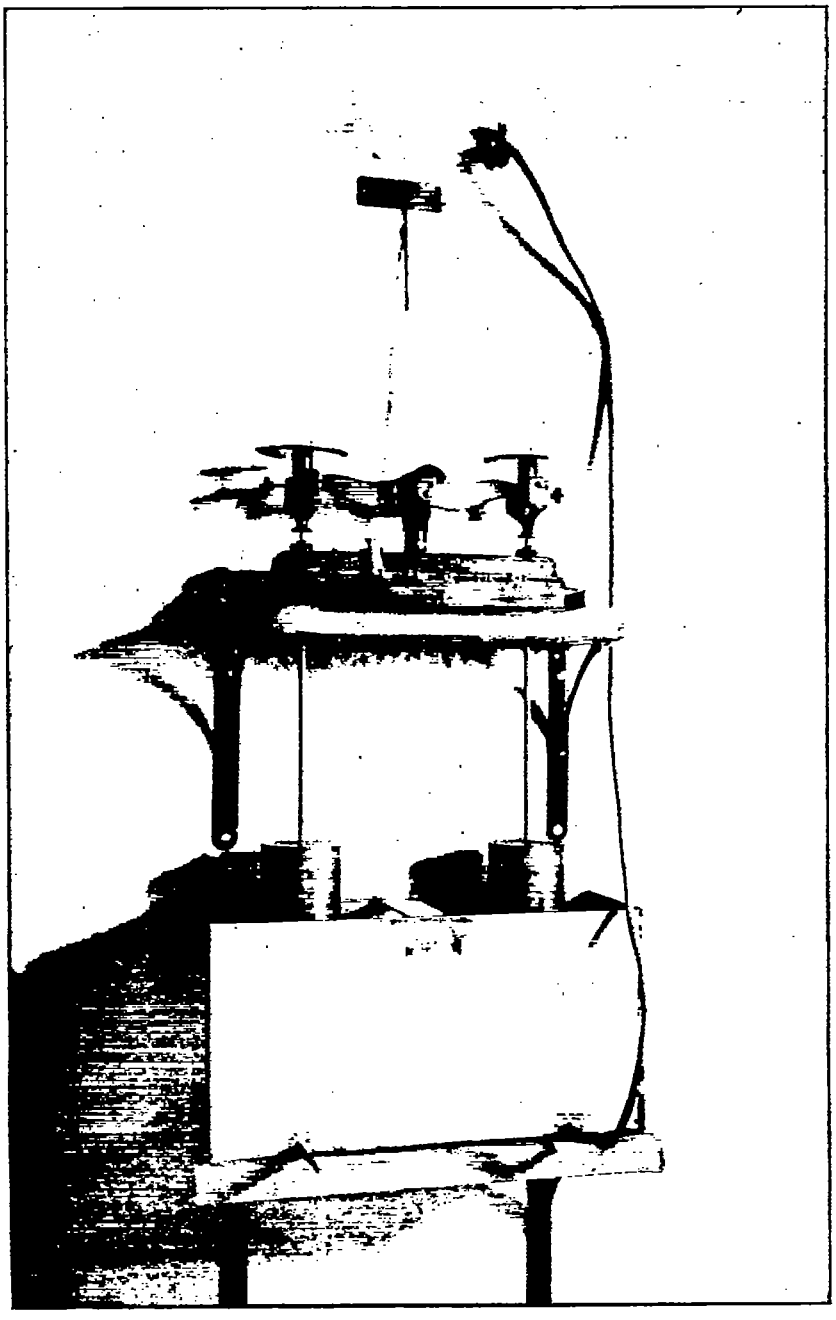

Fig. 8.

Energy dissipated = 0.86 × kinetic energy of air at throat.

The relation of wind velocity to fan revolutions and of wind velocity to fan horsepower are shown graphically in figures 9 and 10, respectively.

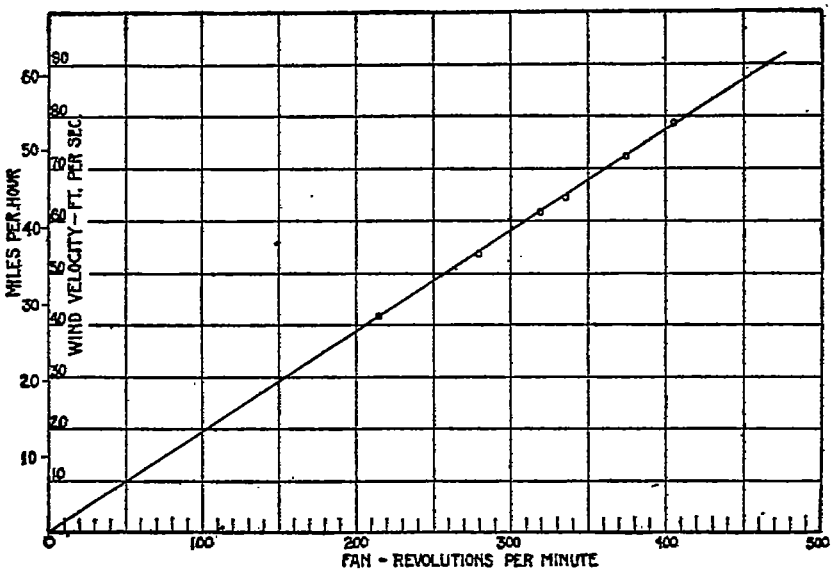

FIG. 9.

TABLE II.

Fan.	Wind velocity per second.	Kinetic energy wind stream.	Fan.
Revolutions per minute.	*Feet.*	*Horsepower.*	*Horsepower.*
215	41.7	3.68	3.32
279	53.8	7.86	6.40
320	61.8	11.95	10.00
336	64.6	13.60	11.70
376	72.8	19.45	16.35
406	78.8	24.70	21.95

5.91×10^9

UNIFORMITY OF VELOCITY OVER CROSS SECTION OF AIR STREAM.

Surveys were made over the cross section of the air stream in order to determine the variation of velocity in time at any one point and from point to point over diameters horizontal and vertical.

These indicated a mean variation of velocity head on distance of about 2.5 per cent or a mean variation of velocity of 1.25 per cent. The variation of velocity at any one point with time was substantially the same. A Pitot tube survey of 20 well-distributed cells of the honeycomb baffle showed, just in front of the delivery plane, a mean variation of velocity head of 0.7 per cent. The time variation of a single cell was similarly 0.8 per cent. These correspond to velocity variations of one-half the above values.

RELATION BETWEEN DEPRESSION WITHIN EXPERIMENT ROOM AND AIR STREAM VELOCITY.

This relation was based on Pitot tube determinations of velocity and manometric balance measures of the difference of pressure acting as an air head. Numerous determinations of this relation were made at the start of the work and they were repeated daily throughout the tests in order to detect any tendency toward change in this relation.

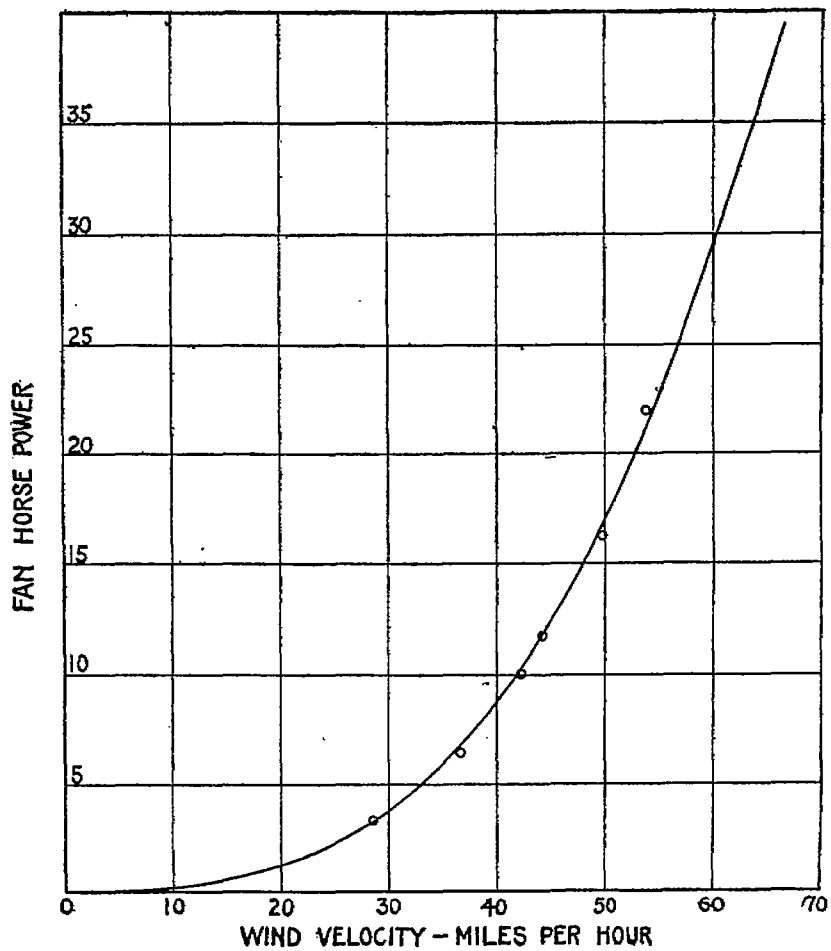

FIG. 10.

The relation was found practically constant and as the result of large numbers of determinations was taken as:

$$\text{Velocity head} = 0.876\ (P_1 - P_2)$$

where P_1 and P_2 denote the pressure heads without and within the experiment room.

It should be noted that when the model propeller is in operation with a velocity sufficient to give a positive slip and hence an additional accelerating effect on the air, we have in effect an additional fan in the

system and hence must expect an increase of velocity of air stream. This effect on the air stream will also be twofold, as follows:

(1) Local and immediately in front of the model propeller, where there will be acceleration of the air as it approaches the propeller.

(2) Outside the immediate local influence of the model propeller where there will be an increase in air stream velocity due to the greater amount of energy supplied in the circuit and a corresponding reduction in pressure in the experiment room with consequent general increase in the speed of inflow. It was, therefore, important to ascertain whether the general velocity of air stream as indicated by that of the cylindrical shell about the propeller still remained in the same relation to the fall of pressure within the experiment room.

Careful and repeated tests showed that this was the case and it was, therefore, assumed that the combined action of the large fan propeller and the model propeller was to produce a velocity of wind stream in the cylindrical shell surrounding the model, standing in the given and fixed relation to the depression caused in the room by the joint action of the two propellers. This velocity of wind stream then corresponds to the indefinite stream flowing around and outside of the propeller in the case of an airplane in free flight, and is, therefore, to be taken as corresponding to the velocity of flight through the air.

Similarly the local result immediately in front of the model propeller is to be taken as similar to the local acceleration of the air immediately in front of the airplane propeller, causing a local flow of air aft to meet the forward moving propeller.

RELATION BETWEEN DIAMETERS OF WIND STREAM AND DIAMETER OF MODEL PROPELLER.

It was assumed from precedent and from general experience in wind-tunnel work that a propeller model 3 feet in diameter could be properly run in a wind stream 5½ feet diameter without sensible disturbance at the boundaries of the stream and hence with sensibly the same result as though in an indefinite stream.

The experimental examination of this question was approached from three different directions, as follows:

(*a*) Successive reduction of wind-stream diameter with comparative study of thrust and torque coefficients.

(*b*) Pitot tube survey of wind stream with model propeller in operation, with special reference to distribution of velocity in the cylindrical shell outside the tip circle of the propeller.

(*c*) Comparison of thrust and torque coefficients for four sizes of propellers of successively increasing diameters.

The results of these three examinations may be briefly indicated.

The diameter of the wind stream was reduced by 6-inch steps by blanking over the delivery end of the collector with suitable flat annular rings. This had the effect of closing off an outer zone of cells of the honeycomb baffle, leaving the remainder operative. This gave wind streams of diameters, successively, 66, 60, 54, and 48 inches, and within which a propeller of 3 feet diameter was run. The results were then reduced to the form of thrust and torque coefficients by assuming, at equal values of V/ND, a force variation with the square of the speed.

The torque and thrust coefficient curves thus derived give the following indications: The torque and thrust of the 3-foot model in

wind streams of 5 feet and 5.5 feet in diameter are sensibly identical. For a wind stream 4.5 feet diameter the torque and thrust were about 2.5 per cent greater than for the wind streams of 5 feet or 5.5 feet diameter.

For a wind stream 4 feet diameter the torque and thrust were 6 to 7 per cent greater than for the wind streams of 5 feet or 5.5 feet diameter.

With the model propeller in operation and throwing aft a slip stream of pronounced velocity, the wind stream across the entire section forward of and about the propeller was subjected to survey by Pitot tube. The results indicated a relatively abrupt break in the influence of the propeller close about the tips of the blades, and that the size of the slip stream proper at and just in advance of the propeller was practically determined by the diameter swept by the tips of the blades. The velocities in the cylindrical ring lying outside the blade tips were also compared with the depression within the chamber and found to agree as previously stated. These tests indicate that the special influence of the propeller in disturbing the distribution of velocities through the wind stream extends to but a slight distance beyond the circle swept by the tips of the blades. The indications of this test, therefore, support fully the anticipated relation between diameter of propeller and of wind stream.

As a final test in regard to this important question, four propellers of diameters, successively, 30, 36, 42, and 48 inches, and similar geometrically, were tested out in regular course and the results reduced to thrust and torque coefficients by assuming, at equal values of V/ND, a force variation with the square of the speed and with the square of the diameter. The results of these tests are shown in figures 11 and 12 and indicate substantially the same values of the coefficients for the same value of V/ND for all four propellers. This indicates apparently that the diameter of the propellers might have been increased to 42 inches, or possibly even to 48 inches, and run in a wind stream of diameter 66 inches without sensible departure from the conditions in an indefinite stream.

As a matter of fact, as may be noted in the figures, the values of the coefficients for the diameters 30, 42, and 48 inches lie most satisfactorily on a continuous smooth curve. Those for the diameter 36 inches lie slightly above. This slight variation is apparently due to some slight departure in geometrical similarity between the propeller for 36-inch diameter and the other three.

In any event these results together with the others noted above seem to justify fully the use of the propeller models of 36 inches diameter in the wind stream of 66 inches diameter.

CALIBRATION OF TORSION DYNAMOMETER.

The torsion dynamometer was calibrated as shown in figure 13. A Prony brake was attached to the shaft at the propeller position. A load was applied and the corresponding yield of the spring was noted. These tests were made at various speeds, and loads were applied varying from zero to the full capacity of the driving motor. These calibrations were conducted daily throughout the tests in order to detect any change in the ratio of spring yield to moment in pound-feet. The ratio was found to be practically constant for all speeds and loads.

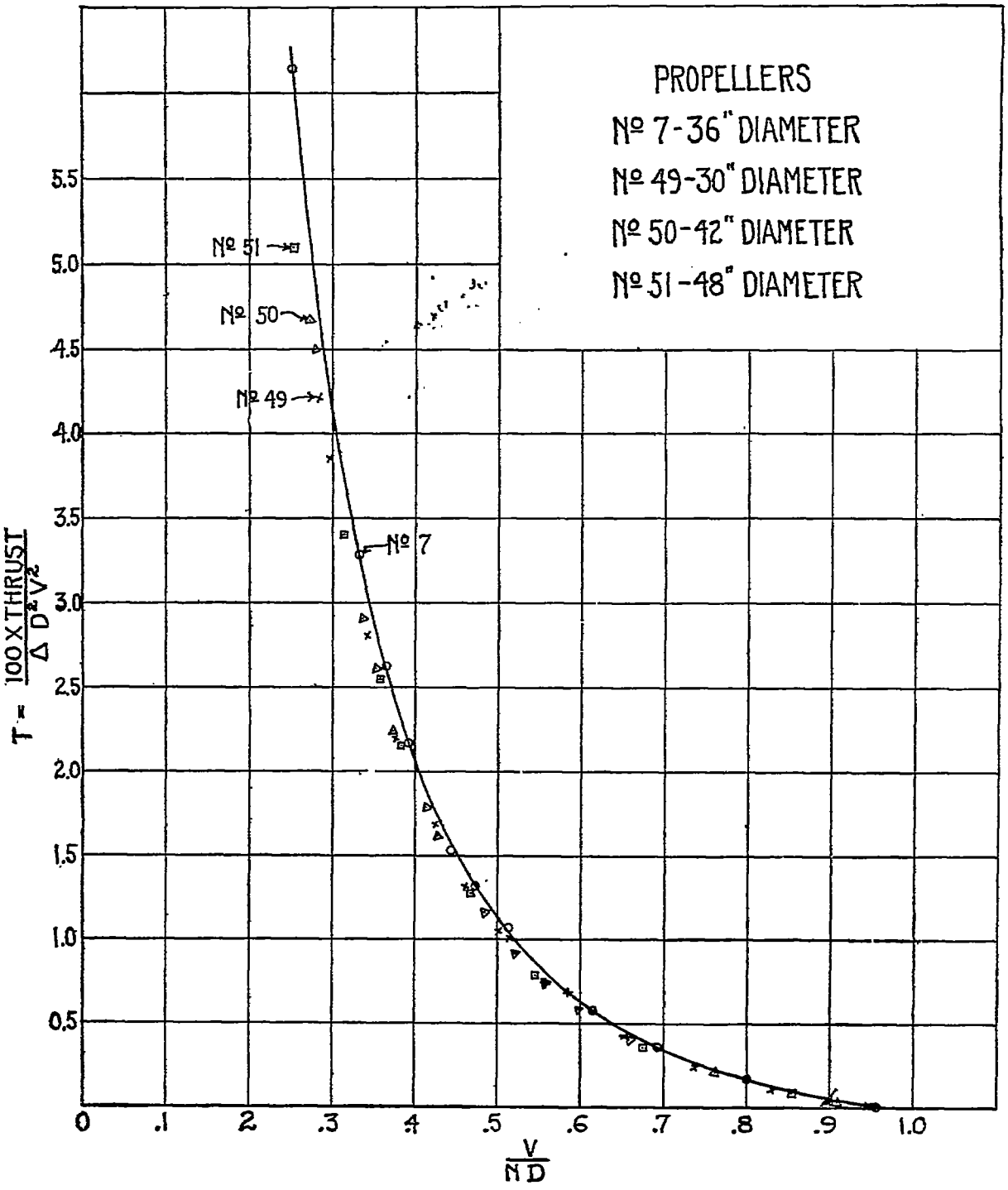
PROPELLERS
Nº 7-36" DIAMETER
Nº 49-30" DIAMETER
Nº 50-42" DIAMETER
Nº 51-48" DIAMETER
Nº 51
Nº 50
Nº 49
Nº 7
T = 100 X THRUST / Δ D²V²
5.5
5.0
4.5
4.0
3.5
3.0
2.5
2.0
1.5
1.0
0.5
0
.1
.2
.3
.4
.5
.6
.7
.8
.9
1.0
V / N D

FIG. 11.

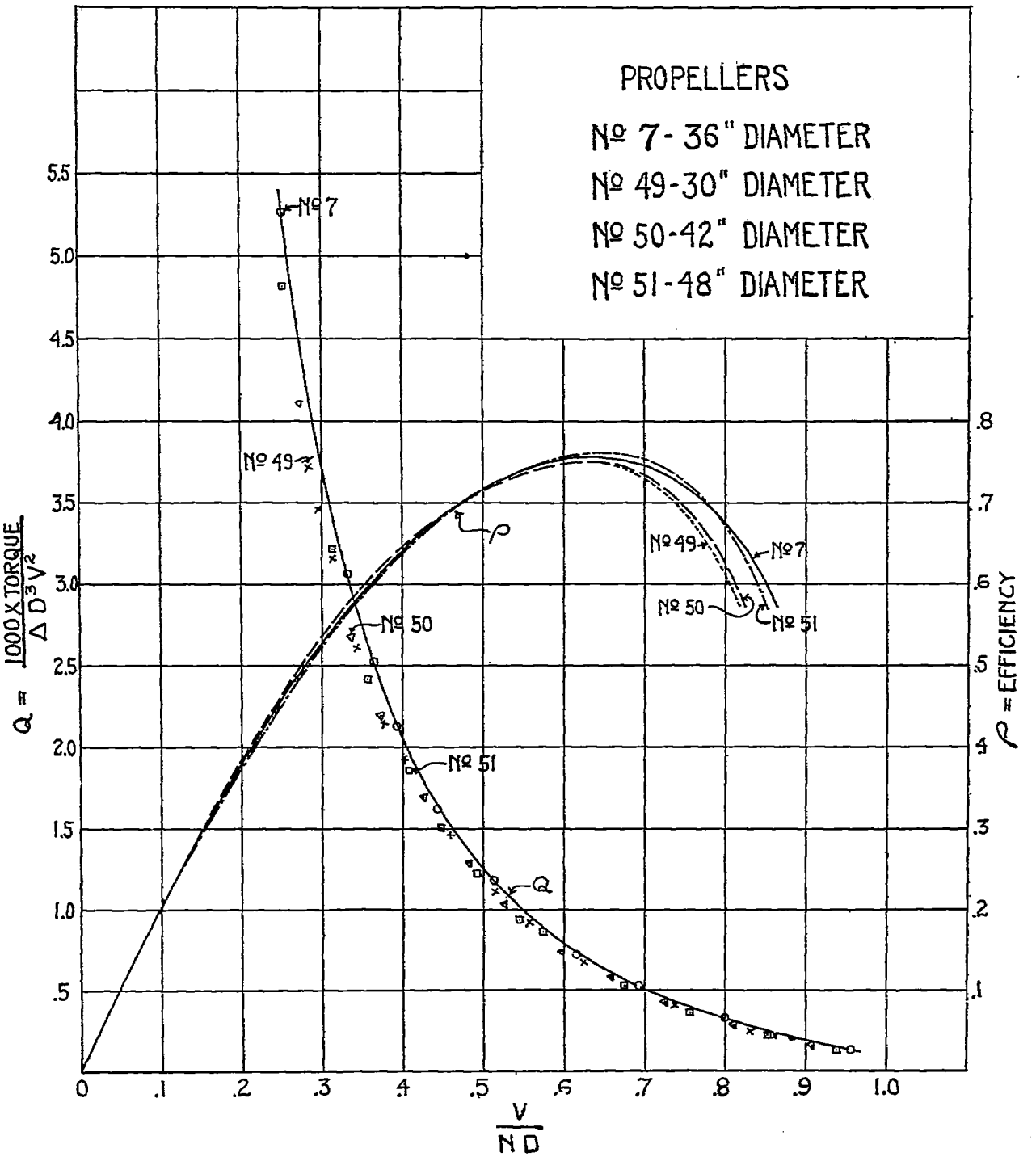
PROPELLERS
№ 7 - 36" DIAMETER
№ 49 - 30" DIAMETER
№ 50 - 42" DIAMETER
№ 51 - 48" DIAMETER
№ 7
№ 49
№ 50
№ 51
ρ
Q
Q = 1000 X TORQUE / Δ D³ V²
ρ = EFFICIENCY
V / N D
5.5
5.0
4.5
4.0
3.5
3.0
2.5
2.0
1.5
1.0
.5
.8
.7
.6
.5
.4
.3
.2
.1
0
.1
.2
.3
.4
.5
.6
.7
.8
.9
1.0

FIG. 12.

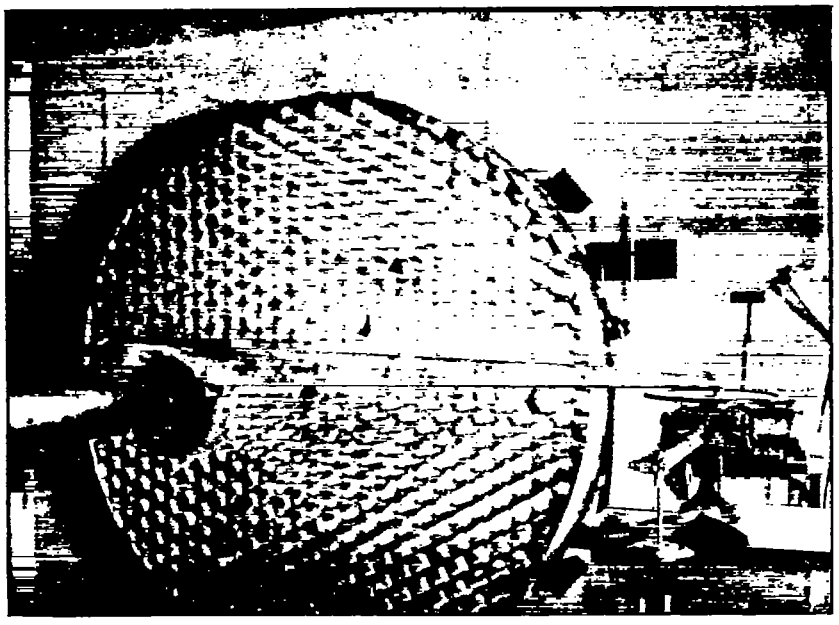

FIG. 18.

REPORT No. 14.

PART II.

TESTS ON 48 MODEL FORMS OF AIR PROPELLERS WITH ANALYSIS AND DISCUSSION OF RESULTS AND PRESENTATION OF THE SAME IN GRAPHIC FORM.

By William F. Durand.

SELECTION OF PROPELLER MODEL CHARACTERISTICS.

As a first stage in the propeller investigation, it was proposed to try out 48 models with characteristics distributed as nearly as possible in a representative way over the field of propeller design. The purpose of this selection was to establish a definite series of design constants and data for these types and characteristics and also to furnish a means for check with the similar work done in other laboratories. With the results thus determined for a set of forms and proportions regularly distributed, further research may be directed along such lines as appear to indicate the most useful results.

After due consideration of the matter the following characteristics were selected to make up by combination the 48 models:

		Values.
Pitch ratio (mean)	0.5, 0.7, 0.9	3
Distribution of pitch	Uniform and variable	2
Mean blade-width ratio [1]	0.15 and 0.20	2
Form of blade contour	Nearly straight parallel and curved tapering	2
Type of blade section	Plain and cambered	2

With the fixed diameter of 36 inches, the three values of the pitch become 18, 25.2 and 32.4 inches, respectively.

The uniform-pitch propellers have this value throughout the blade surface.

For the variable pitch forms, variation according to the Drzewiecki method was followed. The angle of incidence chosen was 3° and the propeller was given the standard pitch for the uniform pitch propellers at the 13-inch radius, the pitch at other radii varying according to the law determined by the angle of incidence selected.

The blade-area, or mean blade-width ratios were so chosen as to give for one a rather moderate area and for the other a rather wide blade or full area.

The forms were so chosen as to give one a blade with nearly parallel sides and the other a more rounded and tapering contour.

The two types of section show for the one a flat driving face and for the other a rather pronounced camber. The amount of camber

[1] Ratio of mean width to radius.

or maximum height of the arc was made one-third the maximum thickness of blade at the outer portion and somewhat less near the hub. The maximum thickness and general character of the sections were taken to represent in proper geometrical ratio average practice with air propellers of full dimension.

The various characteristics of these model propellers are shown more definitely by Tables III, IV, V, and figures 14 to 24.

TABLE III.—*Characteristics of model propellers.*

No.	Diameter.	Pitch.	Pitch ratio.	Mean blade width.	Shape of blade.	Blade section.
	Inches.	*Inches.*				
1	36	32.4	0.9	0.15 r	1	Non-cam.
2	36	32.4	.9	.20 r	1	Non-cam.
3	36	32.4	.9	.15 r	2	Non-cam.
4	36	32.4	.9	.20 r	2	Non-cam.
5	36	25.2	.7	.15 r	1	Non-cam.
6	36	25.2	.7	.20 r	1	Non-cam.
7	36	25.2	.7	.15 r	2	Non-cam.
8	36	25.2	.7	.20 r	2	Non-cam.
9	36	18.0	.5	.15 r	1	Non-cam.
10	36	18.0	.5	.20 r	1	Non-cam.
11	36	18.0	.5	.15 r	2	Non-cam.
12	36	18.0	.5	.20 r	2	Non-cam.
13	36	30.6-33.9	.9	.15 r	1	Non-cam.
14	36	30.6-33.9	.9	.20 r	1	Non-cam.
15	36	30.6-33.9	.9	.15 r	2	Non-cam.
16	36	30.6-33.9	.9	.20 r	2	Non-cam.
17	36	22.8-26.8	.7	.15 r	1	Non-cam.
18	36	22.8-26.8	.7	.20 r	1	Non-cam.
19	36	22.8-26.8	.7	.15 r	2	Non-cam.
20	36	22.8-26.8	.7	.20 r	2	Non-cam.
21	36	15.3-19.6	.5	.15 r	1	Non-cam.
22	36	15.3-19.6	.5	.20 r	1	Non-cam.
23	36	15.3-19.6	.5	.15 r	2	Non-cam.
24	36	15.3-19.6	.5	.20 r	2	Non-cam.
25	36	32.4	.9	.15 r	1	Cam.
26	36	32.4	.9	.20 r	1	Cam.
27	36	32.4	.9	.15 r	2	Cam.
28	36	32.4	.9	.20 r	2	Cam.
29	36	25.2	.7	.15 r	1	Cam.
30	36	25.2	.7	.20 r	1	Cam.
31	36	25.2	.7	.15 r	2	Cam.
32	36	25.2	.7	.20 r	2	Cam.
33	36	18.0	.5	.15 r	1	Cam.
34	36	18.0	.5	.20 r	1	Cam.
35	36	18.0	.5	.15 r	2	Cam.
36	36	18.0	.5	.20 r	2	Cam.
37	36	30.6-33.9	.9	.15 r	1	Cam.
38	36	30.6-33.9	.9	.20 r	1	Cam.
39	36	30.6-33.9	.9	.15 r	2	Cam.
40	36	30.6-33.9	.9	.20 r	2	Cam.
41	36	22.8-26.8	.7	.15 r	1	Cam.
42	36	22.8-26.8	.7	.20 r	1	Cam.
43	36	22.8-26.8	.7	.15 r	2	Cam.
44	36	22.8-26.8	.7	.20 r	2	Cam.
45	36	15.3-19.6	.5	.15 r	1	Cam.
46	36	15.3-19.6	.5	.20 r	1	Cam.
47	36	15.3-19.6	.5	.15 r	2	Cam.
48	36	15.3-19.6	.5	.20 r	2	Cam.
49	30	21.0	.7	.15 r	2	Non-cam.
50	42	29.4	.7	.15 r	2	Non-cam.
51	48	33.6	.7	.15 r	2	Non-cam.

TABLE III.—CHARACTERISTICS OF MODEL PROPELLERS.

Pitch.—Where a single value is given, the pitch is uniform. Where two values are given, they relate to radii at 4 and 18 inches from center. The pitch is understood to vary in the Drzewiecki system from one value to the other for an angle of attack of 3°.

Pitch ratio.—For the variable pitch propellers the pitch ratio relates to the pitch at radius 13 inches.

Mean width of blade.—The mean width of blade relates to the actual blade—normally that part lying beyond radius $0.2r$ approximately. The face area of a two-blade propeller will then be mean width $+0.8D$, and hence the two values of the face areas employed are approximately $0.06D^2$ and $0.08D^2$.

Shape of blade.—The numbers 1 and 2 are employed to designate, respectively, the straight or curved forms, as shown in figures 14, 15.

Blade section.—The terms "cam." and "non-cam." are used, respectively, to designate the cambered and noncambered forms of blade section, as shown in figures 16–23.

TABLE IV.—*Dimensions of model propeller sections.*

Propeller numbers.	Form, area, and section symbols.	Radius of section.	AB.	AE.	AC and BD.	EG.	EH.	EM.	RS.	θ
		Inches.	*Inches.*	*Inches.*	*Inches.*	*Inches.*	*Inches.*	*Inches.*	*Inches.*	°
1 13	$F_1A_1S_1$	4	2.45	0.90	0.05	0.70	1.19	.....	0.15	78
5 17		7	2.70	.90	.05	.60	1.01	.....	.....	69
9 21		10	2.70	.90	.05	.50	.84	.....	.....	60
		13	2.70	.90	.05	.40	.66	.....	.....	51
		16	2.70	.90	.05	.30	.49	.....	.....	42
25 37	$F_1A_1S_2$	4	2.45	.90	.05	.70	1.19	.....	.....	78
29 41		7	2.70	.90	.05	.60	1.01	0.166	.....	69
33 45		10	2.70	.90	.05	.50	.84	.166	.....	60
		13	2.70	.90	.05	.40	.66	.133	.....	51
		16	2.70	.90	.05	.30	.49	.100	.....	42
2 14	$F_1A_2S_1$	4	3.27	1.20	.05	.70	1.19	.....	.20	78
6 18		7	3.60	1.20	.05	.60	1.01	.....	.....	69
10 22		10	3.60	1.20	.05	.50	.84	.....	.....	60
		13	3.60	1.20	.05	.40	.66	.....	.....	51
		16	3.60	1.20	.05	.30	.49	.....	.....	42
26 38	$F_1A_2S_2$	4	3.27	1.20	.05	.70	1.19	.....	.....	78
30 42		7	3.60	1.20	.05	.60	1.01	.166	.....	69
34 46		10	3.60	1.20	.05	.50	.84	.166	.....	60
		13	3.60	1.20	.05	.40	.66	.133	.....	51
		16	3.60	1.20	.05	.30	.49	.100	.....	42
3 15	$F_2A_1S_1$	4	3.00	1.00	.05	.70	1.19	.....	.18	78
7 19		7	3.22	1.07	.05	.60	1.01	.....	.....	69
11 23		10	3.14	1.05	.05	.50	.84	.....	.....	60
		13	2.68	.89	.05	.40	.66	.....	.....	51
		16	1.90	.63	.05	.30	.49	.....	.....	42
27 39	$F_2A_1S_2$	4	3.00	1.00	.05	.70	1.19	.....	.....	78
31 43		7	3.22	1.07	.05	.60	1.01	.166	.....	69
35 47		10	3.14	1.05	.05	.50	.84	.166	.....	60
		13	2.68	.89	.05	.40	.66	.133	.....	51
		16	1.90	.63	.05	.30	.49	.100	.....	42
4 16	$F_2A_2S_1$	4	4.00	1.33	.05	.70	1.19	.....	.25	78
8 20		7	4.30	1.43	.05	.60	1.01	.....	.....	69
12 24		10	4.18	1.39	.05	.50	.84	.....	.....	60
		13	3.58	1.19	.05	.40	.66	.....	.....	51
		16	2.54	.85	.05	.30	.49	.....	.....	42
28 40	$F_2A_2S_2$	4	4.00	1.33	.05	.70	1.19	.....	.....	78
32 44		7	4.30	1.43	.05	.60	1.01	.166	.....	69
36 48		10	4.18	1.39	.05	.50	.84	.166	.....	60
		13	3.58	1.19	.05	.40	.66	.133	.....	51
		16	2.54	.85	.05	.30	.49	.100	.....	42

F_1 denotes form No. 1, as in figure 14.
F_2 denotes form No. 2, as in figure 15.
A_1 denotes smaller area, mean blade width ratio 0.15.
A_2 denotes larger area, mean blade width ratio 0.20.
S_1 denotes blade section with plain face, figures 16, 18, etc.
S_2 denotes blade section with cambered face, figures 17, 19, etc.

TABLE V.—*Nominal and dynamic pitch of propeller models.*

Propeller No.	$\frac{V}{ND}$ for $T=0$.	Dynamic pitch.	Nominal pitch.	Propeller No.	$\frac{V}{ND}$ for $T=0$.	Dynamic pitch.	Nominal pitch.
		Inches.	*Inches.*			*Inches.*	*Inches.*
1	1.178	42.3	32.4	25	1.200	43.2	32.4
2	1.128	40.6	32.4	26	1.086	39.1	32.4
3	1.198	43.1	32.4	27	1.170	42.1	32.4
4	1.090	39.3	32.4	28	1.092	39.3	32.4
5	.995	35.8	25.2	29	1.006	36.2	25.2
6	.910	32.8	25.2	30	.872	31.4	25.2
7	.964	34.7	25.2	31	.968	34.8	25.2
8	.870	31.3	25.2	32	.910	31.8	25.2
9	.756	27.2	18.0	33	.770	27.7	18.0
10	.680	24.5	18.0	34	.671	24.2	18.0
11	.757	27.2	18.0	35	.765	27.5	18.0
12	.690	24.8	18.0	36	.718	25.9	18.0
13	1.178	42.3	32.4	37	1.148	41.3	32.4
14	1.098	39.5	32.4	38	1.108	39.8	32.4
15	1.193	42.9	32.4	39	1.150	41.4	32.4
16	1.109	39.9	32.4	40	1.054	37.9	32.4
17	.948	34.1	25.2	41	.914	32.9	25.2
18	.867	31.2	25.2	42	.884	31.8	25.2
19	.923	33.2	25.2	43	.942	33.9	25.2
20	.890	32.0	25.2	44	.861	31.0	25.2
21	.734	26.4	18.0	45	.715	25.7	18.0
22	.673	24.2	18.0	46	.690	24.8	18.0
23	.720	25.9	18.0	47	.729	26.2	18.0
24	.664	23.9	18.0	48	.692	24.9	18.0

Dynamic Pitch$=D\times\left(\frac{V}{ND}\text{ for }T=0\right)$

CONSTRUCTION OF MODEL PROPELLERS.

The model propellers were made of Pacific coast sugar pine (*Pinus Lambertaina*) a wood light, strong, and which upon careful test was found to retain its form without change once well seasoned. The stock obtained was well seasoned at the start but was sawn into blocks a little larger than the propellers and allowed to still further dry out.

The propellers were hand formed from templates laid out carefully according to the characteristics desired. The general arrangement of the swinging crab for carrying the templates is shown in figure 25. The templates carried on the swinging arm or crab were located at values of the radii 4, 7, 10, 13, 16, 17.5 inches. The proper application of these templates gave six lines across the blade lying on the final finished surface and at intervals of 3 inches, except at the tip, as noted. The intermediate area was then readily taken down by judgment and the face reduced to a smooth continuous surface, fair with the lines determined by the edges of the templates.

The form of blade contour was then laid out on the helical surface thus determined, and the blade reduced to proper contour form. Similar templates were prepared for the back of the blade and the proper distribution of thickness and form of blade section thus determined.

The propellers were then given two coats of shellac and two coats of varnish and rubbed down between coats.

The 48 models tested are shown in figures 26, 27, and 28. The three other models, together with No. 7 to which they are similar geometrically, are shown in figure 29.

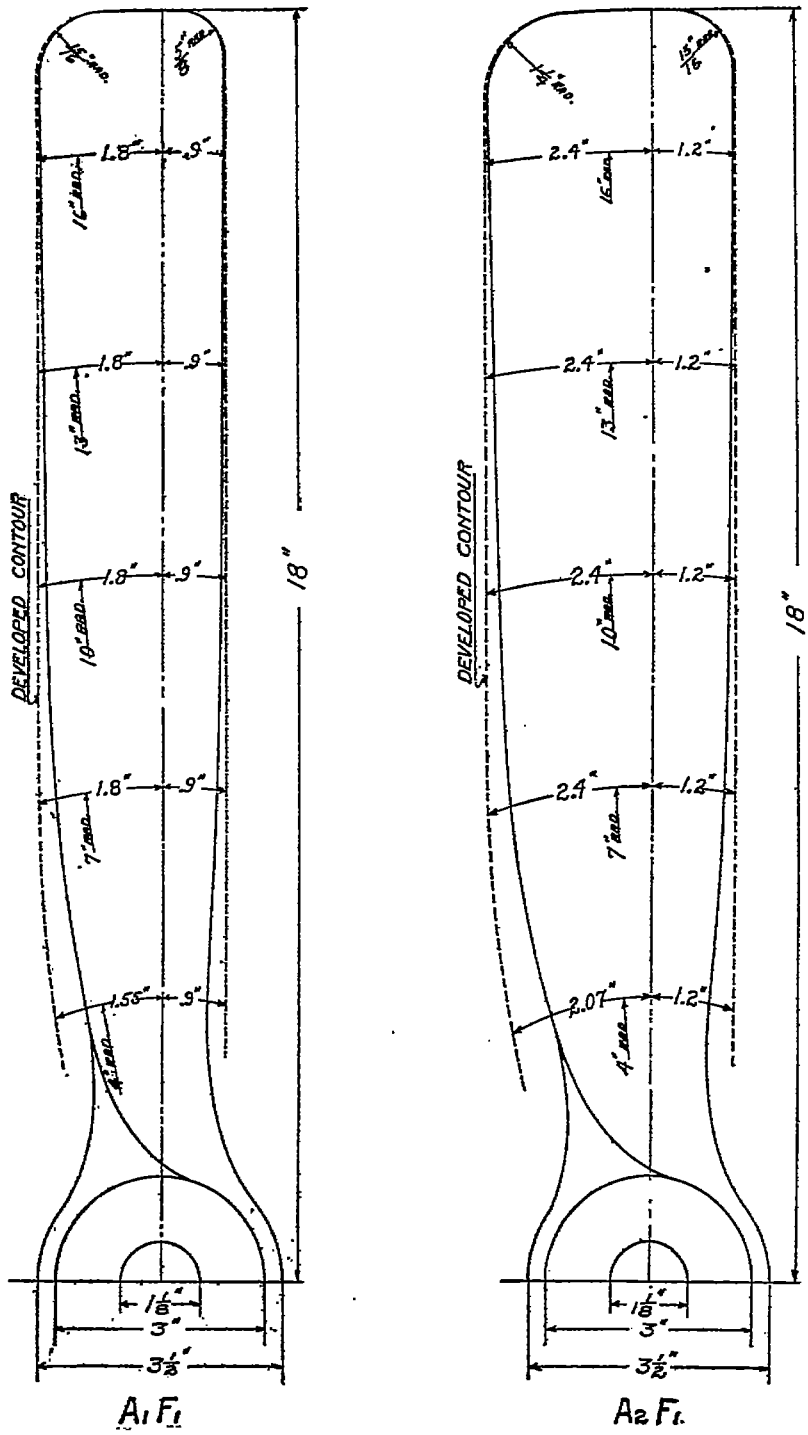
DEVELOPED CONTOUR
1.8"
.9"
16" RAD.
13" RAD.
10" RAD.
7" RAD.
4" RAD.
1.55"
18"
1 1/8"
3"
3 1/2"
A1 F1
2.4"
1.2"
2.07"
A2 F1.

FIG. 14.

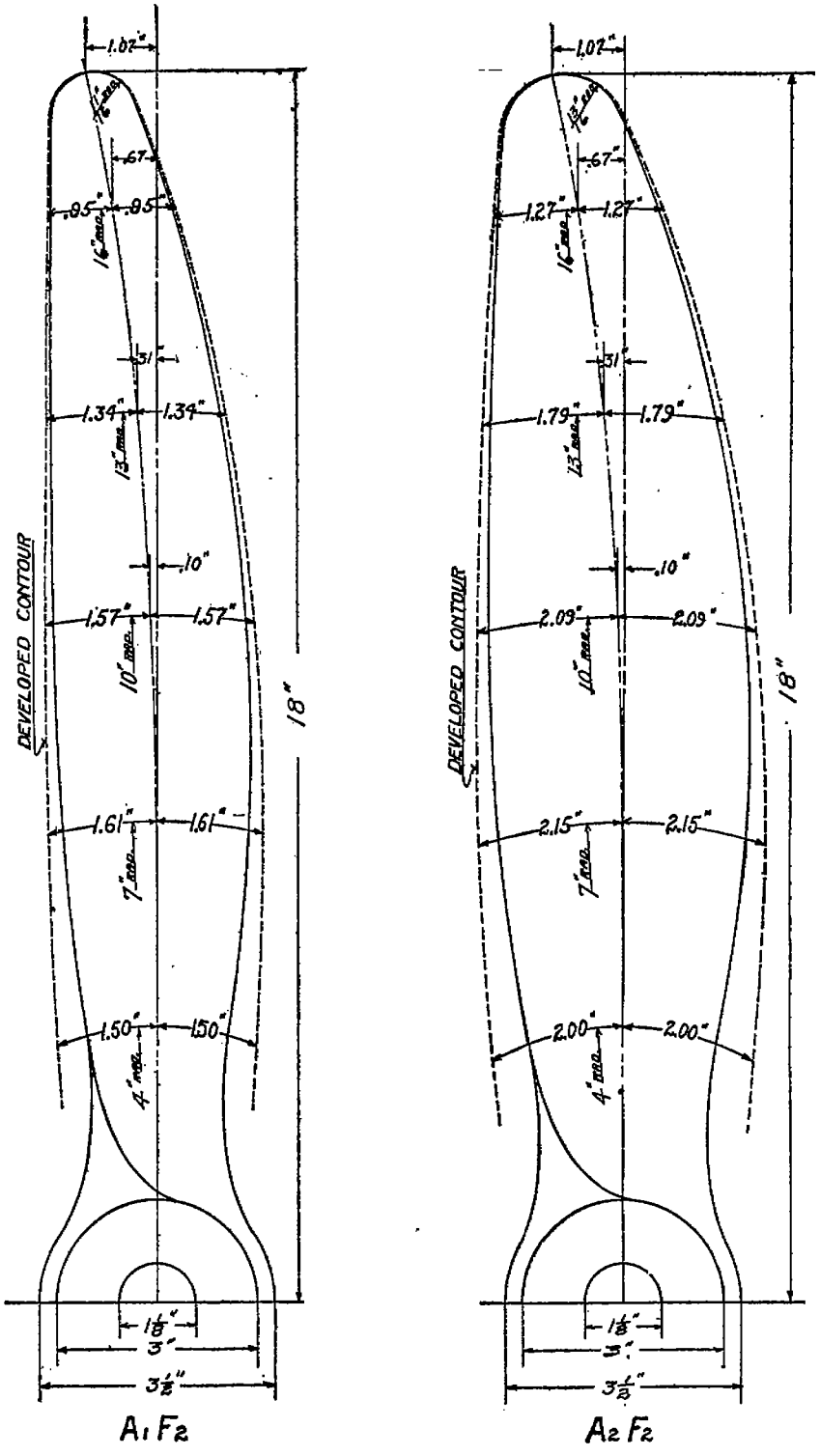
1.02"
.67"
.95"
.95"
.31"
1.34"
1.34"
.10"
1.57"
1.57"
1.61"
1.61"
1.50"
1.50"
DEVELOPED CONTOUR
18"
1.27"
1.27"
1.79"
1.79"
2.09"
2.09"
2.15"
2.15"
2.00"
2.00"
3"
A1 F2
A2 F2

FIG. 15.

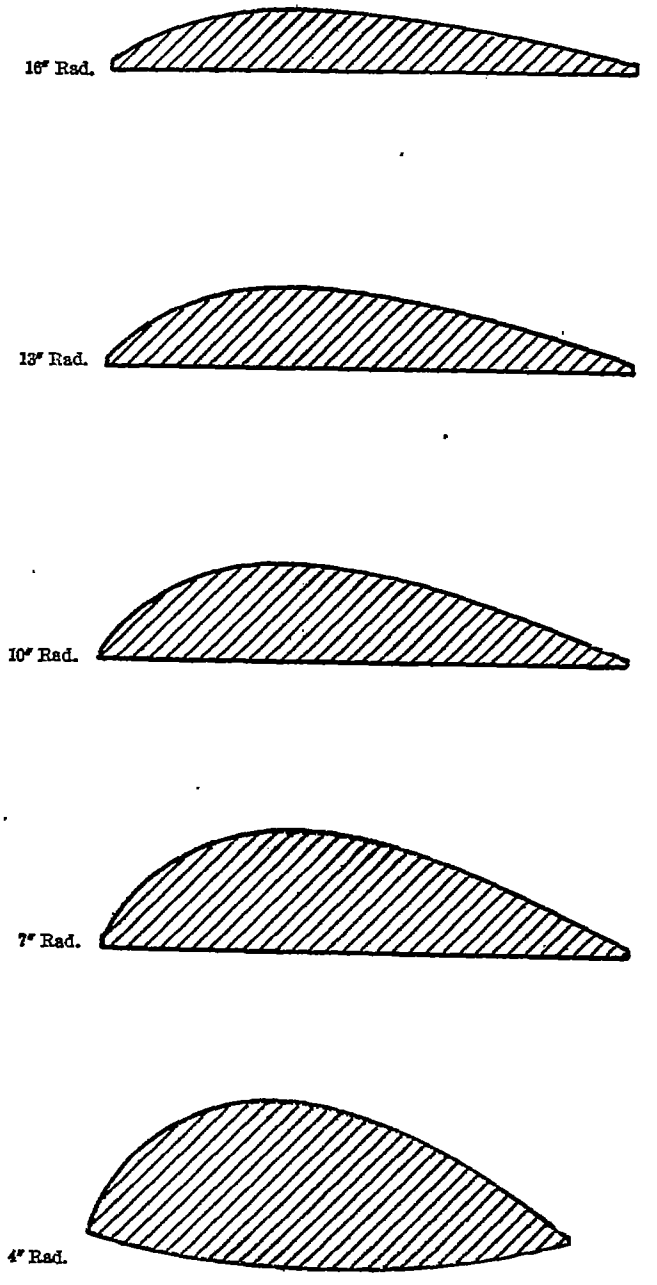

$F_1 A_1 S_1$

FIG. 16.—Propeller model sections. (For dimensions see diagrams and tables.)

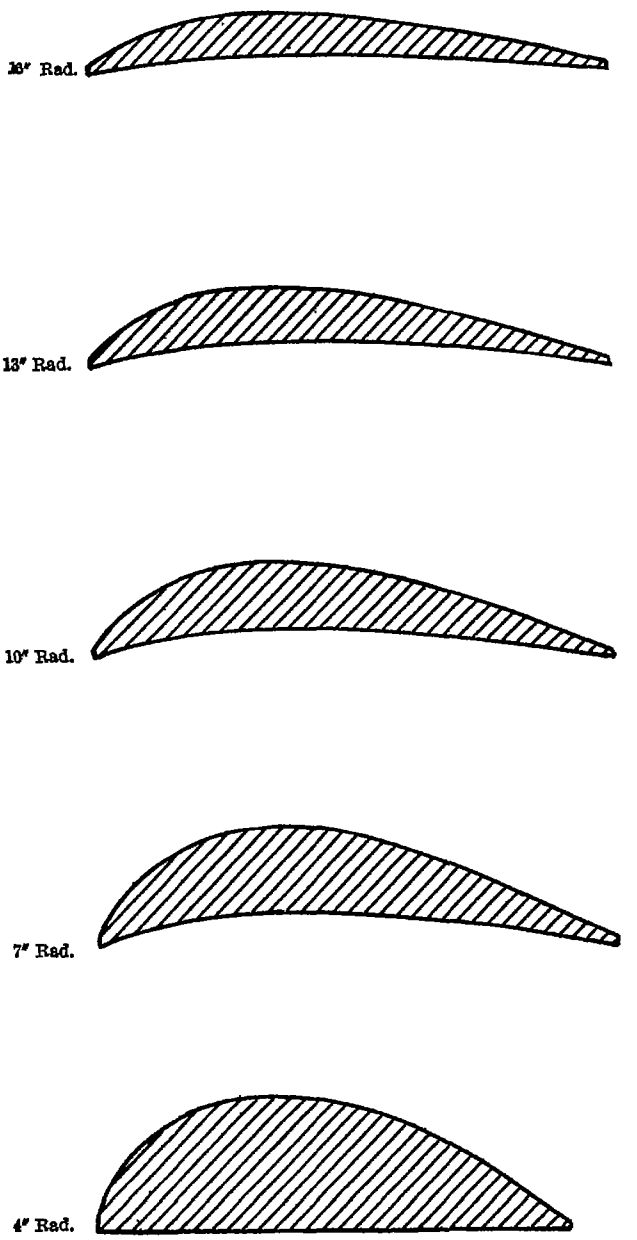

$F_1 A_1 S_1$

FIG. 17.—Propeller model sections (For dimensions see diagrams and tables.)

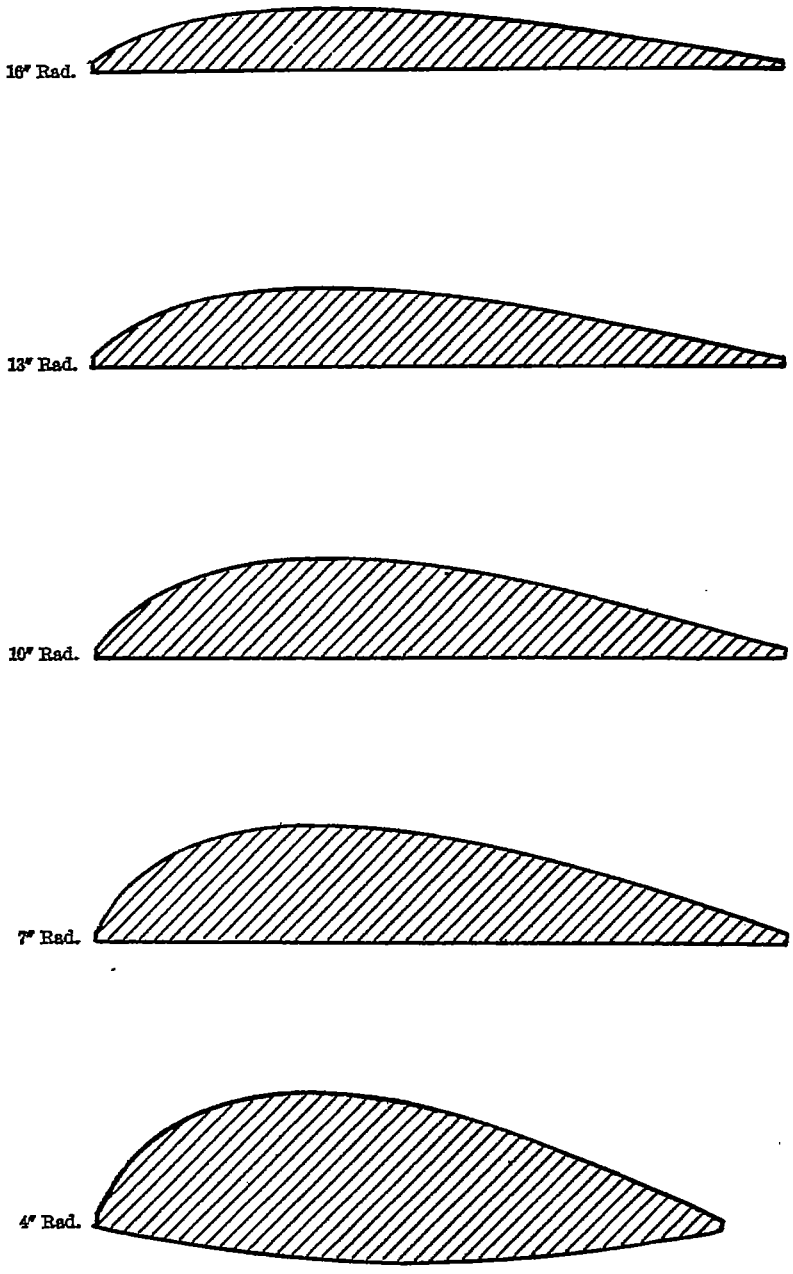

$F_1 A_2 S_1$

FIG. 18.—Propeller model sections. (For dimensions see diagrams and tables.)

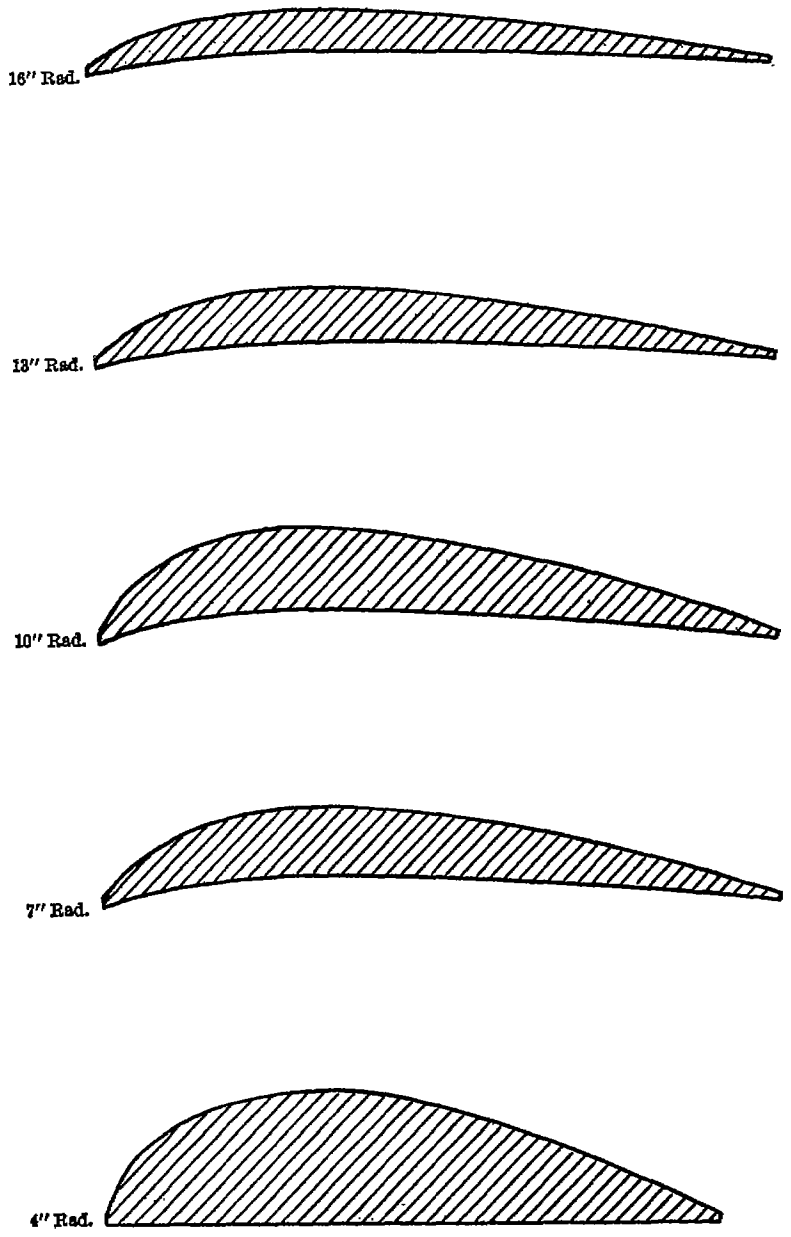

F_1 A_2 S_2

FIG. 19.—Propeller model sections. (For dimensions see diagrams and tables.)

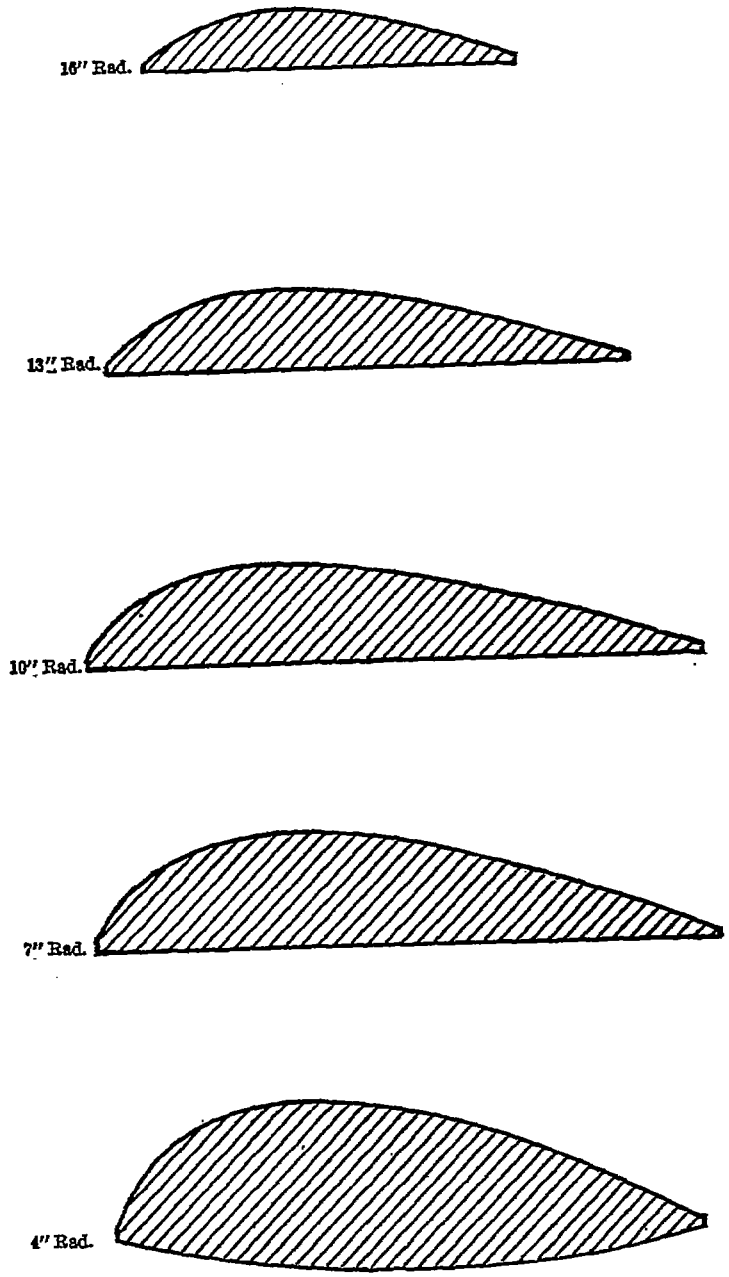

$F_1 A_1 S_1$

FIG. 20.—Propeller model sections. (For dimensions see diagrams and tables.)

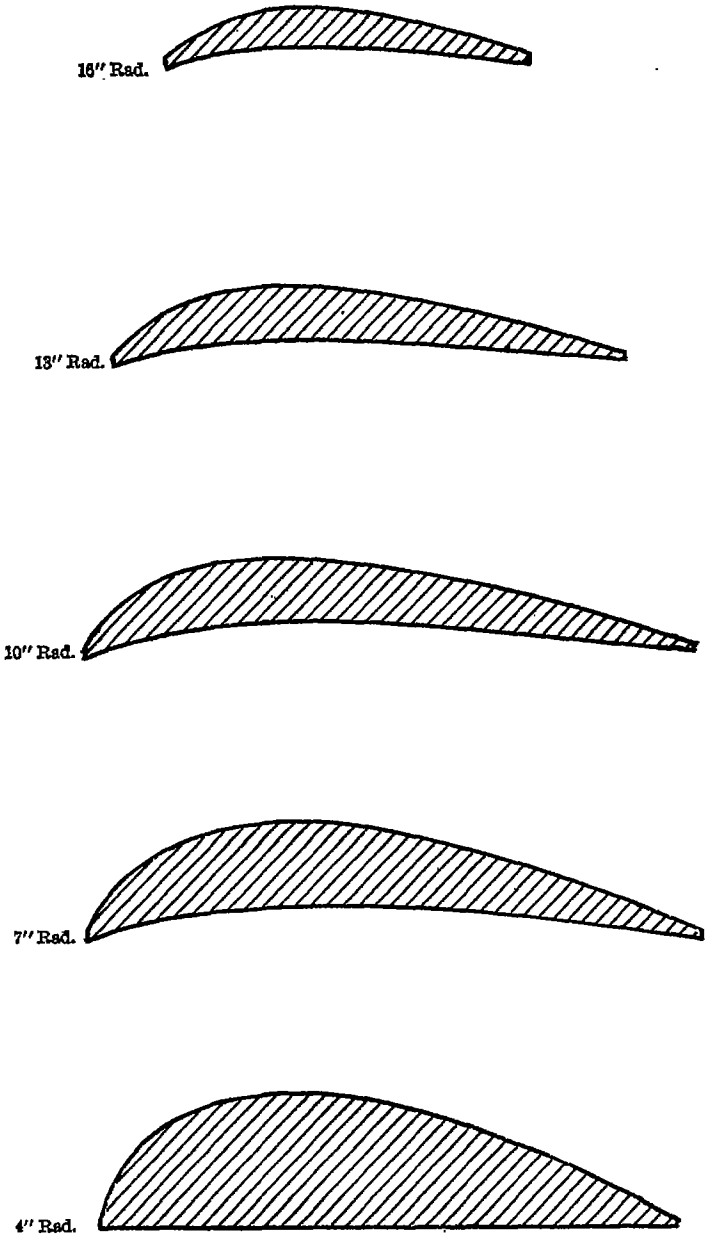

$F_2 A_1 S_2$

FIG. 21.—Propeller model sections. (For dimensions see diagrams and tables.)

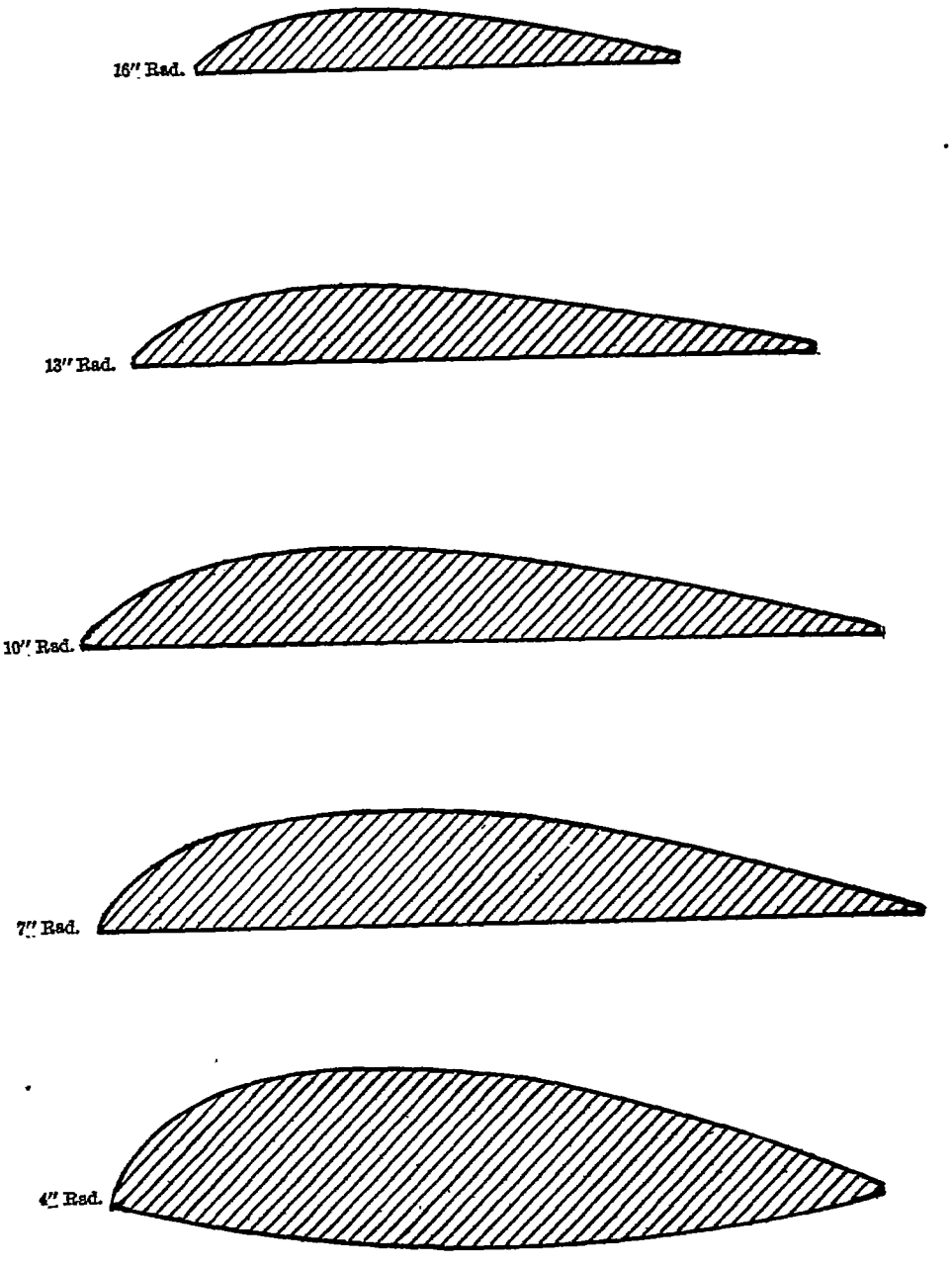

$F_3 A_2 S_1$

FIG. 22.—Propeller model sections. (For dimensions see diagrams and tables.)

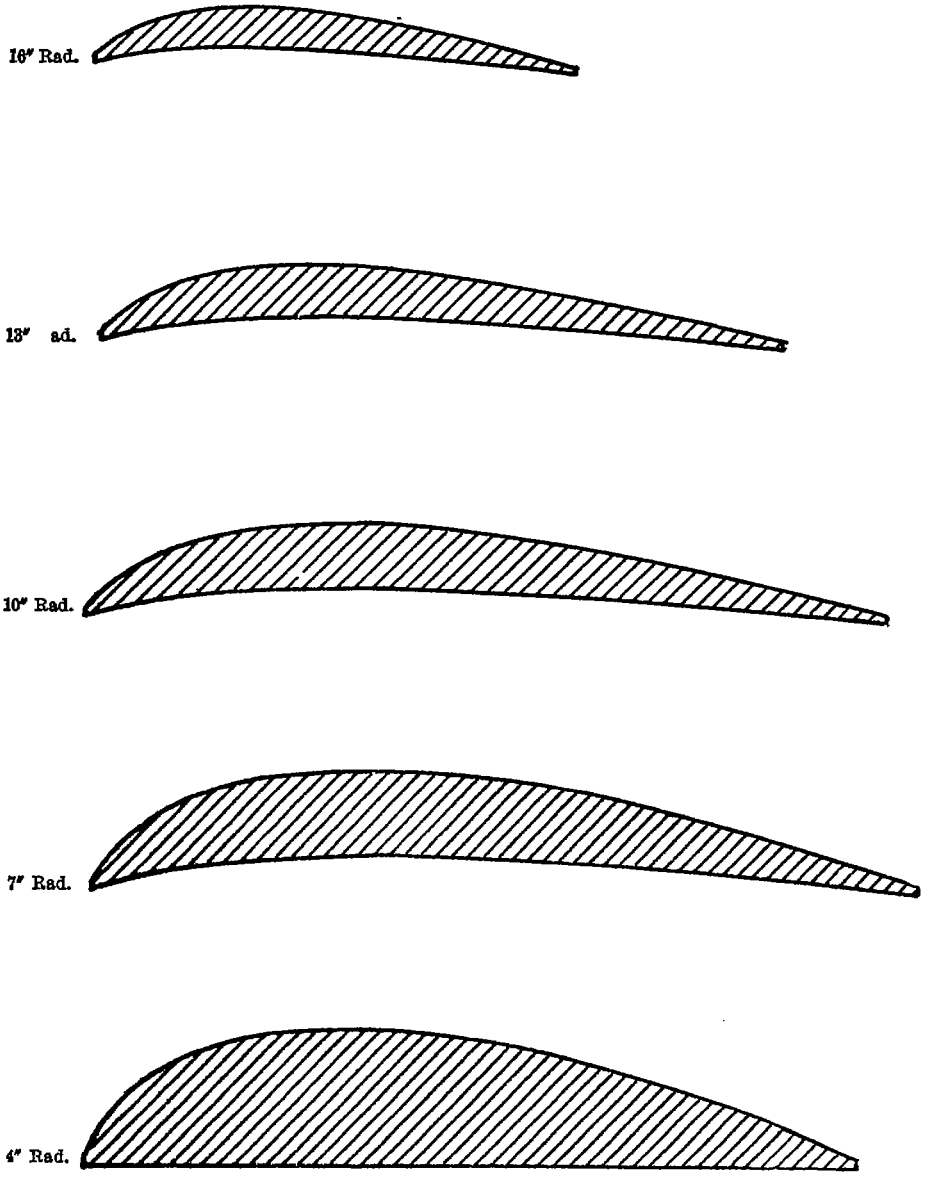

$F_2 A_1 S_2$

FIG. 23—Propeller model sections. (For dimensions see diagrams and tables.)

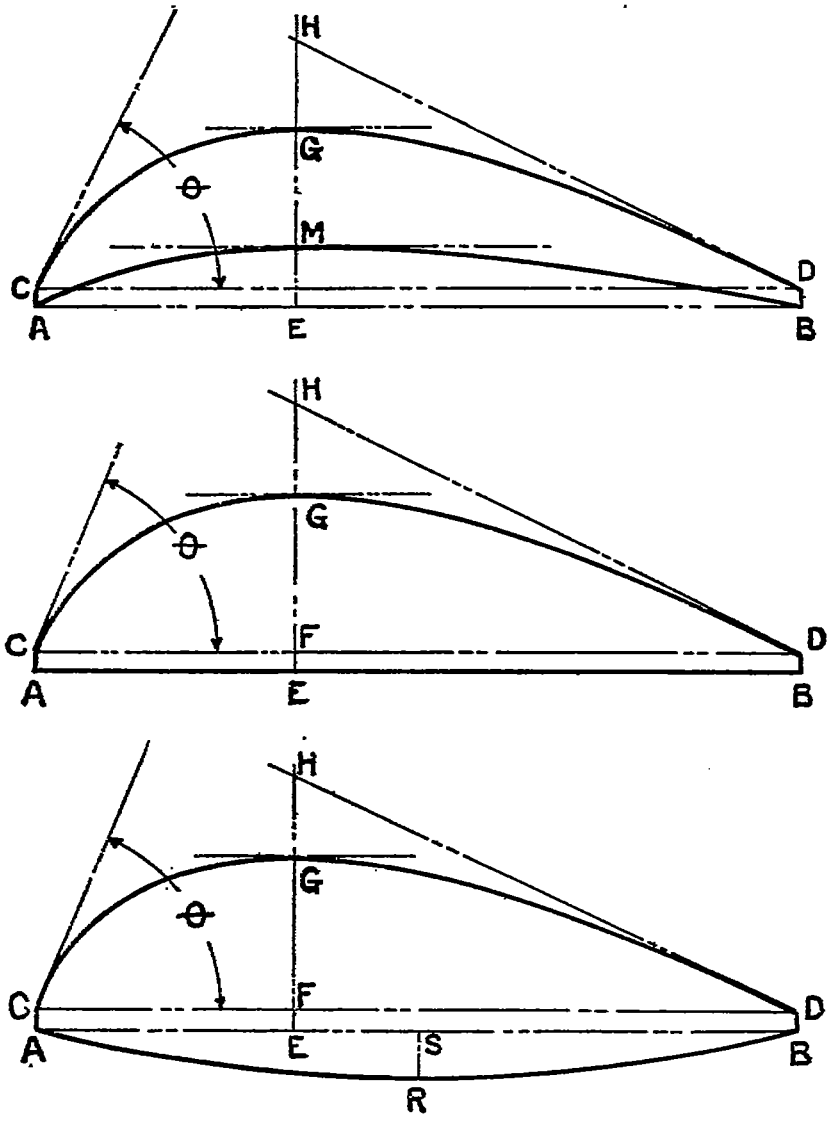

FIG. 24.

METHOD OF CONDUCTING TESTS.

The items involved in a single set of observations are the following:

(1) The wind speed.
(2) The revolutions per second or per minute.
(3) The thrust.
(4) The torque (moment).
(5) The density of the air.

The wind speed was determined by reading, simultaneously with the other observations, the depression in the room. This with the relation established by Pitot tube calibration gave the velocity head, and this with the density gave the speed. It may be noted that the relation between the Pitot tube measurement of velocity head and the manometer measure of the depression was determined day by day as a matter of routine, but was not found to vary more than 1 per cent from that given by the ratio 0.876 as noted previously.

The revolutions per second were determined by taking the length on a strip of paper from the revolution counter drum covering a period of some 10 seconds lying on either side of the instant of simultaneous observations. This was then readily converted into revolutions through the factor 50 per inch and hence the relation between revolutions and time determined. It may be noted that the nature of the record was such as to permit a reading of revolutions to one-tenth of one revolution per second.

The thrust, as has been previously noted, was read directly from the weights and rider on the scale beam. The balance was sensitive to about one two-hundredth of a pound, and including slight perturbations, the readings could normally be made to one one-hundredth of a pound.

The torque moment was read from the circular scale as noted in connection with the description of this part of the equipment. The reading, including perturbations, could usually be made to one-tenth of one division of the scale which corresponds to 0.007 pound-foot. The relation between the scale divisions and the torque at the end of the propeller shaft was, in the manner previously noted, determined daily throughout the series of tests in order to insure against any change in this relation.

Before starting a propeller test a dummy hub was put in place of the propeller and the driving motor started. It was allowed to run from 15 to 20 minutes until bearings had attained a running temperature and the torque indicator showed no tendency to change from a steady position. The position of the torque indicator was observed for various speeds and if found to be sensibly constant was noted. The thrust balance was adjusted to read zero. The model propeller was then put in position and driven at various speeds from that required for zero thrust to thrusts of from 50 to 60 pounds.

Simultaneous observations were made of—

Torque (moment).
Thrust.
Room depression.
Barometer.
Dry-bulb temperature.
Wet-bulb temperature.
Revolutions per second.

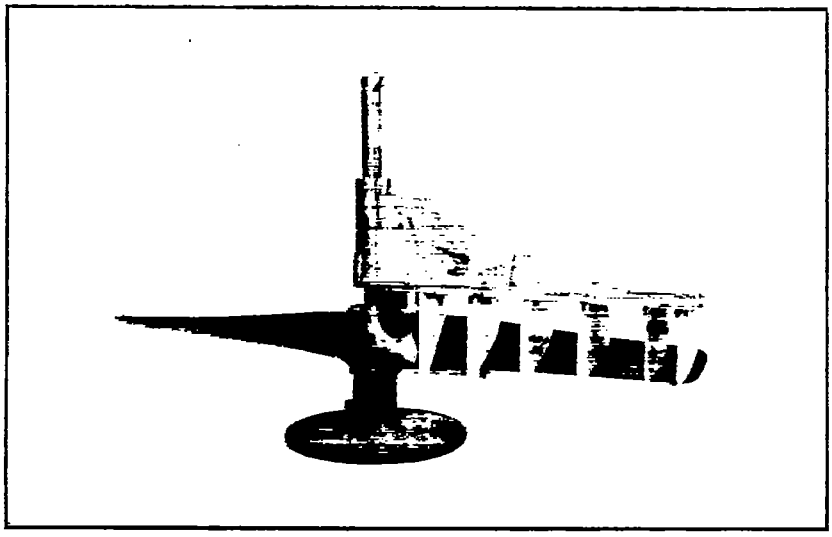

FIG. 25.

114-1

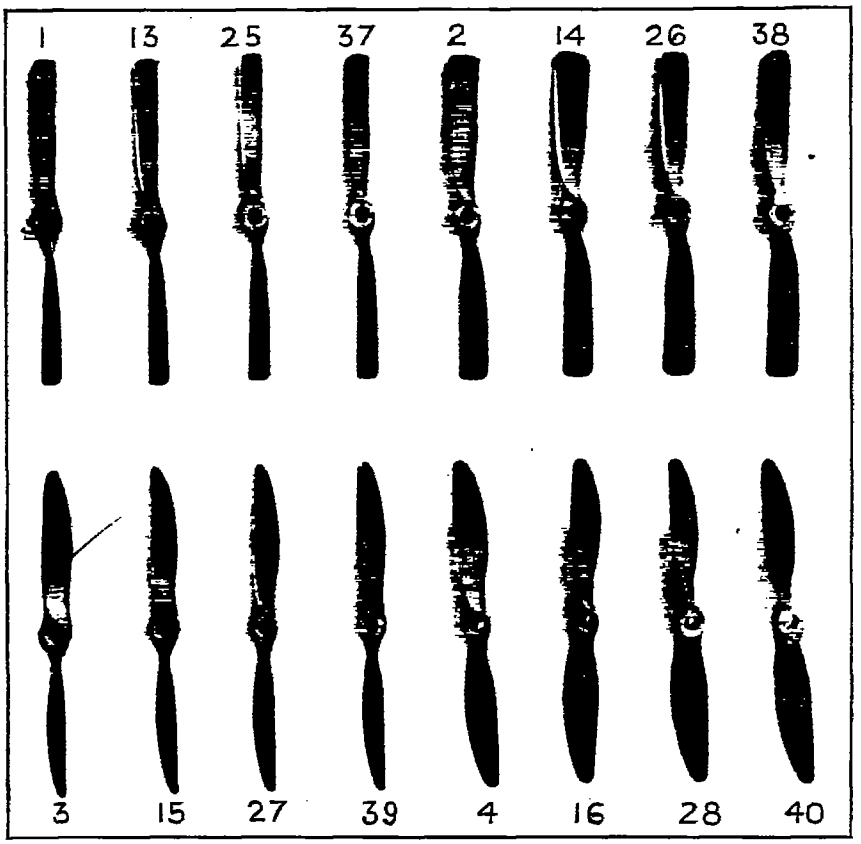

FIG. 26.

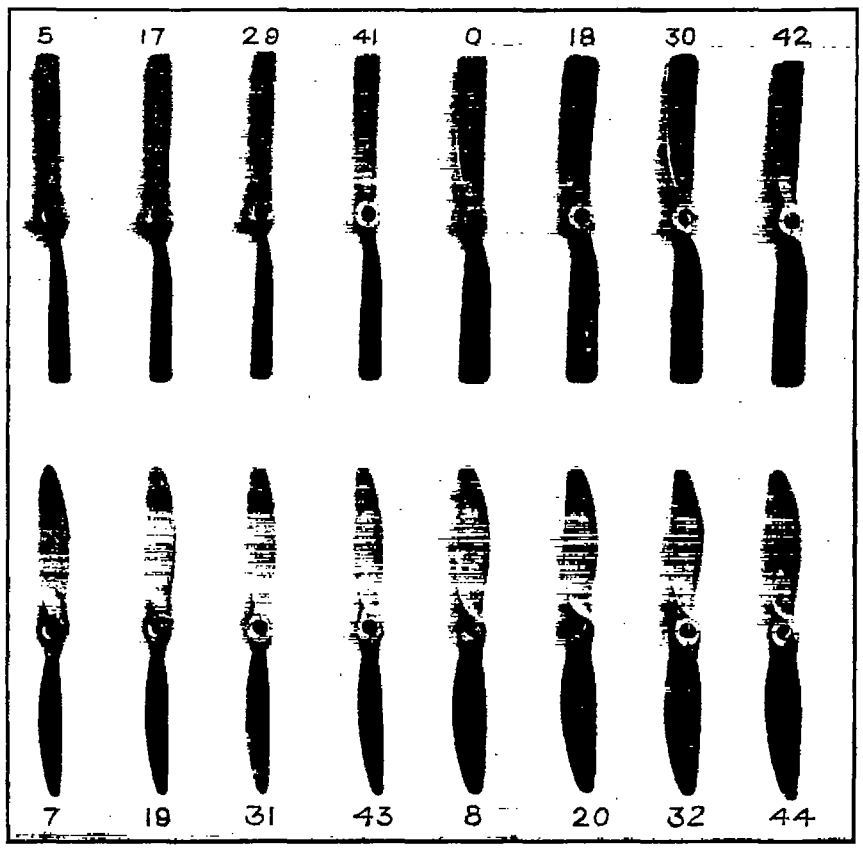

FIG. 27.

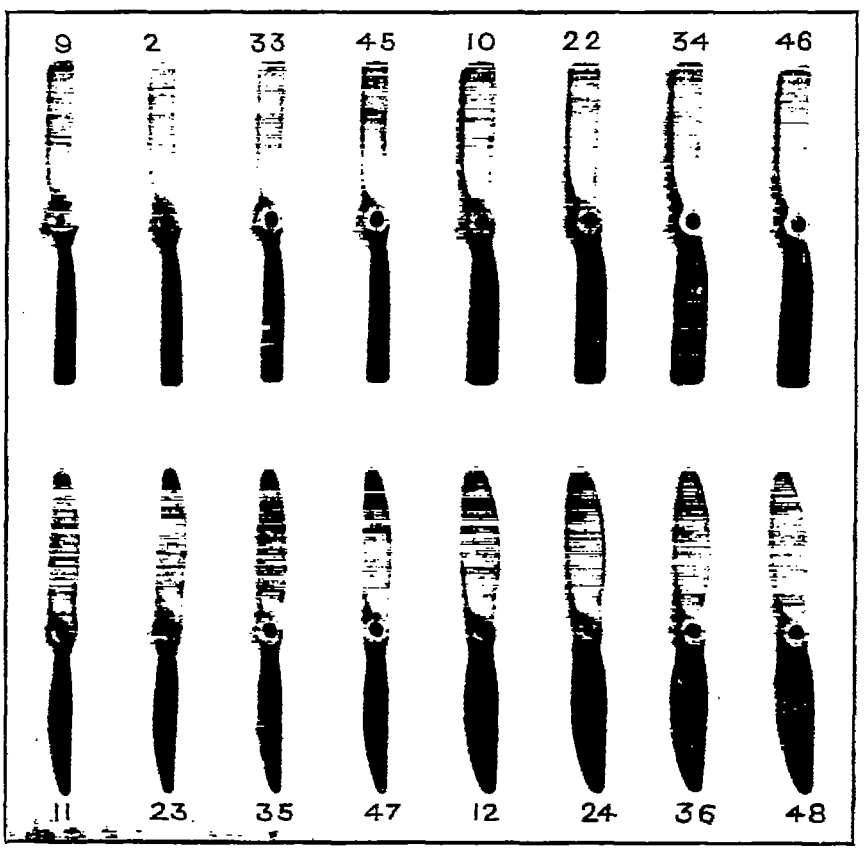

FIG. 28.

114-4

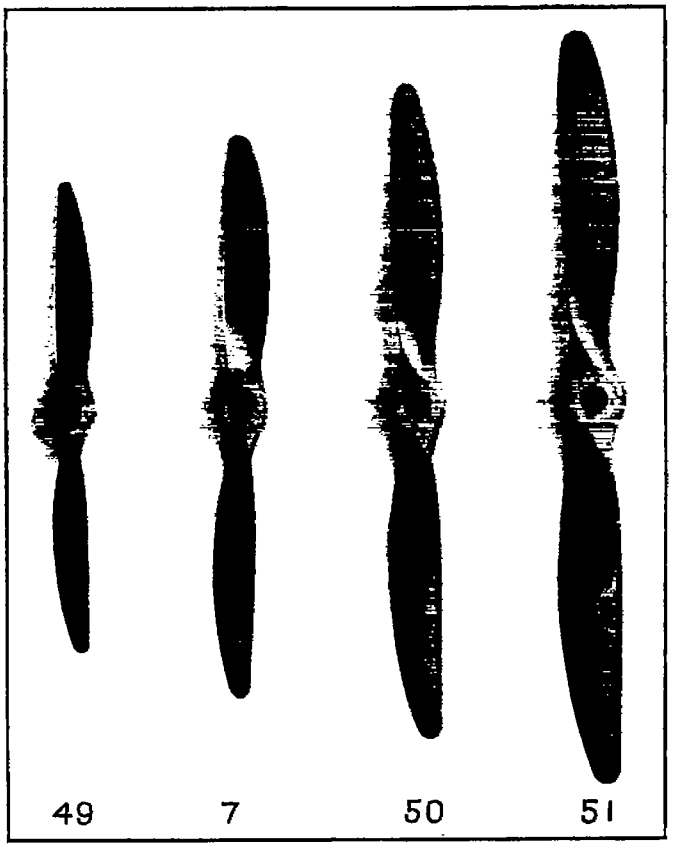

Fig. 29.

When the test was completed the propeller was again replaced by the dummy hub and the torque zero again observed. In the reduction of observations this zero value was subtracted from the observed torque, thus eliminating the friction of the mechanism between the torque spring and the propeller.

In the general plan of procedure the propeller fan was run at a given uniform speed and the model propeller was run at a series of revolutions suited to cover the range in operating conditions desired. With increase in the revolutions of the model propeller there develops naturally some increase in the speed of the wind stream. The actual observations were made, therefore, under a series of determinately varying values of the revolutions and a consequent slight variation in wind-stream velocities.

In most cases, moreover, the model propellers have been thus run at two or more values of the fan speed.

All values thus derived are then reduced to coefficients, as explained in the following section.

REDUCTION OF OBSERVATIONS.

Let V=velocity.
N=revolutions.
D=diameter.
Δ=density of air.
T=thrust.
Q=torque.
P_e=effective power=power delivered to or absorbed by the propeller.
P_u=useful power=power realized in forward movement of plane.
ρ=efficiency.

In this notation, and for the purposes of general discussion, we assume the units employed to constitute a homogeneous system throughout, such, for example, as the foot, the pound, and the second or the meter, the kilo and the second. At a later point, and when dealing with commercial units, horsepower, speed in miles per hour and revolutions per minute, the corresponding symbols will be suitably defined.

The conditions of any one test as dependent on the relation between the wind stream and the speed of the propeller itself are most conveniently indicated by the values of the ratio V/ND. The relation of this function to pitch and slip may be noted in passing. If we let p denote pitch, m the ratio of pitch to diameter, and s the slip ratio, then we have

$$V=pN\,(1-s)=mDN\,(1-s) \text{ and}$$

$$\frac{V}{ND}=m\,(1-s)$$

Assuming that the thrust (or pull) developed by the propeller varies directly with the density of the medium, with the area of the

propeller disk, and with the square of the wind stream speed, we have

$$T \sim \Delta D^2 V^2$$

Hence $\frac{T}{\Delta D^2 V^2}$ will be a dimensionless coefficient if all quantities are measured in absolute units. If T is measured in gravity units, the dimensionless coefficient will be $\frac{gT}{\Delta D^2 V^2}$.

Similarly, for the torque Q, the two corresponding dimensionless coefficients will be $\frac{Q}{\Delta D^3 V^2}$ and $\frac{gQ}{\Delta D^3 V^2}$.

The efficiency comes immediately from the equation

$$\rho = \frac{TV}{2\pi NQ}$$

If, then, these values of thrust coefficient, torque coefficient, and efficiency are plotted on an abscissa of V/ND, we shall have a complete expression of all relations involved in the operation of the propeller, and in such form as to be readily applicable to any proposed or specified case.

In Plates VI to XXI are shown diagrams giving values of the thrust and torque coefficients and of the efficiency, all for the 48 models tested. For convenience the actual scale of ordinates gives values of 100 times the thrust coefficient and of 1,000 times the torque coefficient.

Let T_c and Q_c denote the thrust and torque coefficients, as defined above. We have then

$$T = \frac{T_c \Delta D^2 V^2}{100}$$

$$Q = \frac{Q_c \Delta D^3 V^2}{1{,}000}$$

$$\rho = \frac{10 T_c V/ND}{2\pi Q_c}$$

It should be noted that for convenience of use in English measures the numerical values of the coefficients as plotted correspond to the measure of force in pounds force; that is, in gravity units for T and Q. These coefficients are therefore not dimensionless so far as the scale of ordinates is involved, but may be made so by multiplying by g. It is evident that the abscissa V/ND is dimensionless so long as the units are homogeneous.

ILLUSTRATIVE PROBLEM.

Given a propeller 8 feet diameter similar to No. 1 and making 1,200 revolutions per minute, with a speed of 72 miles per hour at an elevation of 3,000 feet, what should be the thrust, torque, horsepower, and efficiency?

We find immediately the value $V/ND=0.66$. Then from the diagram we find for the thrust and torque coefficients, respectively, 0.685 and 0.970.* We then have

$$T=\frac{0.685\times64\times11{,}152\times0.071}{100}=347 \text{ pounds.}$$

$$Q=\frac{0.970\times512\times11{,}152\times0.071}{1{,}000}=393 \text{ pound-feet.}$$

$$P_e=\frac{393\times2\pi\times1{,}200}{33{,}000}=89.5 \text{ horsepower.}$$

$$\rho=\frac{0.685\times0.66\times10}{0.970\times2\pi}=0.742.$$

LOGARITHMIC DIAGRAMS.

The thrust and torque coefficients, with the curves of efficiency, as given in Plates VI — XXI, contain all the fundamental data as derived from the model experiments and may be used for the solution of various problems which may arise. They are not, however, the most conveniently adapted to the solution of the problems commonly arising, especially when the data involves horsepower, speed in miles per hour, and revolutions per minute. For the treatment of problems involving the data in this form, it has been found convenient to use the coefficients or functions†

$$\frac{P_e}{\Delta N^3D^5} \text{ and } \frac{P_u}{\Delta N^3D^5}$$

plotted on an axis of V/ND.

In these expressions the units employed are still understood to constitute a homogeneous system as in the preceding section. It is also readily seen that with absolute units for force these expressions give dimensionless coefficients. With gravity units for force, they must be multiplied by g in order to give coefficients independent of the system of units.

To derive the values of these coefficients from those for thrust and torque we have

$$\frac{P_e}{\Delta N^3D^5}=\frac{Q}{\Delta V^2D^3}\times2\pi\left(\frac{V}{ND}\right)^2 \quad . \quad . \quad . \quad . \quad . \qquad (5)$$

$$\frac{P_u}{\Delta N^3D^5}=\frac{T}{\Delta V^2D^2}\times\left(\frac{V}{ND}\right)^3 \quad . \quad . \quad . \quad . \quad . \quad . \qquad (6)$$

The most convenient graphical representation of these coefficients is by means of the Eiffel logarithmic diagrams.‡

*Assuming a density at 3,000 feet of 0.071 pound per cubic foot.

† For a discussion of these with other special coefficients, reference may be made to paper by Marchis published in Report of the National Advisory Committee for Aeronautics for 1916, p. 585.

‡ Nouvelles Recherches sur la Resistance de l'air et l'Aviation, p. 309.

To develop these diagrams we first, for numerical convenience, assume a standard or reference value Δ_0 for the density of the air, and standard or reference values N_0, D_0 for the revolutions and diameter. We then have

$$\begin{aligned}\log.\frac{P_e}{\Delta N^3 D^5} &= \log. P_e - \log. \Delta/\Delta_0 - \log. \Delta_0 - 3 \log. N/N_0 - 3 \log. N_0 \\ &\quad - 5 \log. D/D_0 - 5 \log. D_0 \\ &= \log. P_e - \log. \Delta/\Delta_0 - 3 \log. N/N_0 - 5 \log. D/D_0 \\ &\quad + \log.\frac{1}{\Delta_0 N_0^3 D_0^5}.\end{aligned}$$

Denote the left-hand member by y and the last member on the right by B. We then have

$$\begin{aligned}y - B = \log.\left[P_e \times \frac{\Delta_0 N_0^3 D_0^5}{\Delta N^3 D^5}\right] &= \log. P_e - \log.\frac{\Delta}{\Delta_0} - 3 \log.\frac{N}{N_0} \\ &\quad - 5 \log.\frac{D}{D_0}. \quad . \quad . \quad . \quad . \quad . \quad . \quad . \quad . \quad . \quad . \quad . \quad . \quad (7)\end{aligned}$$

Similarly we have for the abscissa

$$\log.\frac{V}{ND} = \log. V/V_0 - \log. N/N_0 - \log. D/D_0 + \log.\frac{V_0}{N_0 D_0}$$

Denote the left-hand member by x and the last term on the right by A, and we have

$$x - A = \log.\left[\frac{V}{ND} \div \frac{V_0}{N_0 D_0}\right] = \log.\frac{V}{V_0} - \log.\frac{N}{N_0} - \log.\frac{D}{D_0}. \quad . \quad . \quad . \quad . \quad (8)$$

In terms of vectors each of these equations may be interpreted as representing the equality of a pair of vectors; the two sides of (7) representing a pair of vectors parallel to Y and the two sides of (8) a pair parallel to X. It further appears that N/N_0 and D/D_0 appear in both (7) and (8), that is on both the X and Y axes.

This immediately suggests an interpretation of these, each in terms of a single vector inclined to X and Y and at such an angle that the X component will give the value which is laid off in the direction of X and the Y component, that laid off in the direction of Y.

Thus suppose for convenience of discussion that $\Delta < \Delta_0$, $N < N_0$, $D < D_0$. Then all vectors on the right-hand sides of (7) and (8) will be essentially positive.

We have then in figure 30 the following vector representations. Let O denote the origin for vectors and X and Y axes. Then:

$$\begin{aligned}OG &= x - A. \\ OA &= \log. V/V_0. \\ AF &= -\log. N/N_0. \\ FG &= -\log. D/D_0. \\ OK &= y - B. \\ OH &= \log. P_e. \\ HI &= -\log. \Delta/\Delta_0. \\ IJ &= -3 \log. N/N_0. \\ JK &= -5 \log. D/D_0.\end{aligned}$$

Noting the values of AF and IJ it is clear that they may be viewed as the horizontal and vertical projections of a vector CZ whose length is $\sqrt{10}$ log. N/N_o and whose inclination to the horizontal is $\tan^{-1}3$. Similarly the vectors FG and JK may be viewed as the projections of a vector ZE whose length is $\sqrt{26}$ log. D/D_o and inclination to the horizontal $\tan^{-1}5$. Thus the compound vector CZE represents completely the members of (7) and (8) involving N and D, the horizontal projection giving the N and D terms in (8) and the vertical projection those in (7).

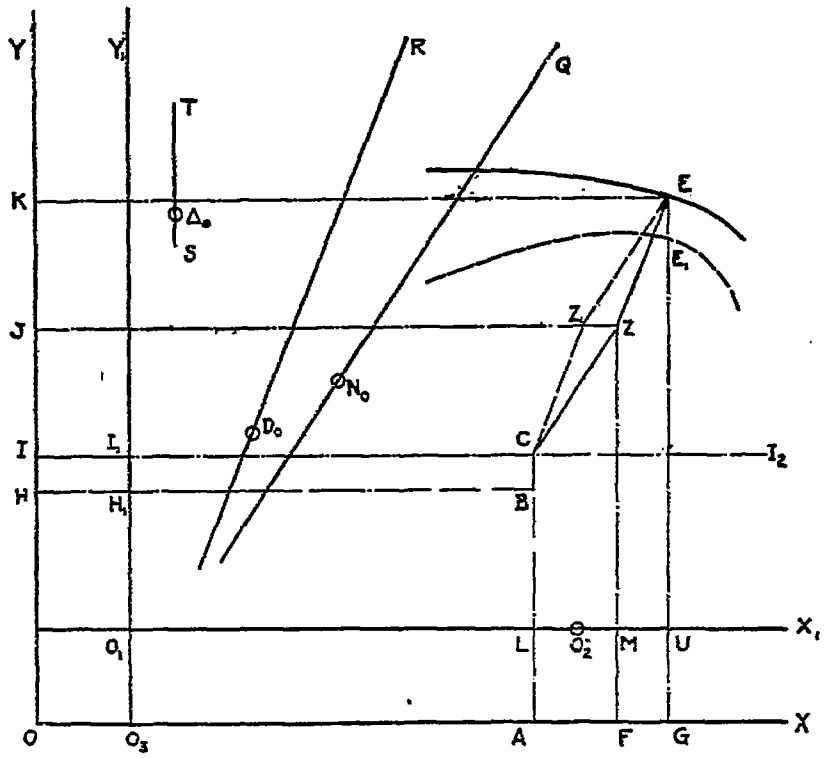

FIG. 30.

These representations may be denoted by writing equations (7) and (8) as follows:

$$y-B=\log.\ P_e-\log.\ \Delta/\Delta_o-\frac{3}{\sqrt{10}}\sqrt{10}\log.\ N/N_o-\frac{5}{\sqrt{26}}\sqrt{26}\ \log.\ D/D_o. \quad . \ . \ . \ (9)$$

$$x-A=\log.\ V/V_o-\frac{1}{\sqrt{10}}\sqrt{10}\log.\ N/N_o-\frac{1}{\sqrt{26}}\sqrt{26}\log.\ D/D_o \ldots\ldots\ldots (10)$$

As a matter of fact it develops that the use of equal scales for the horizontal and vertical axes, the former for equation (8) and the latter for (7), leads to an ill-proportioned diagram. It is found, therefore, preferable to use a scale for the vertical measurements

one-half that for the horizontal and to adjust the length and slope of the oblique vectors accordingly. In such case it is clear that the actual lengths of the vectors IJ and JK, figure 30, will be one-half the lengths with equal scales throughout. We have then $1^2+(3/2)^2=13/4$ and $1^2+(5/2)^2=29/4$, and hence the length of the vector CZ in terms of the unit of X will be $(\sqrt{13}/2)$ log. N/N_o and in terms of the unit of $Y\sqrt{13}$ log. N/N_o. Its inclination to the axis of X will be tan.$^{-1}3/2$. Similarly the length of the vector ZE in terms of the unit of X will be $(\sqrt{29}/2)$ log. D/D_o, and in terms of the unit of Y, $\sqrt{29}$ log. D/D_o. Its inclination to the horizontal will be tan.$^{-1}5/2$. Similarly, the length of IJ in terms of the unit of X will be 3/2 log. N/N_o, and in terms of the unit of Y, 3 log. N/N_o, and the length of JK in terms of the unit of X, 5/2 log. D/D_o, and in terms of the unit of Y, 5 log. D/D_o. It is thus clear that we may express these vector relations by writing equations (7) and (8) as follows:

$$y-B=\log.P_e-\log.\Delta/\Delta_o-\frac{3}{\sqrt{13}}\frac{\sqrt{13}}{2}\log.N/N_o-\frac{5}{\sqrt{29}}\frac{\sqrt{29}}{2}\log.D/D_o\ldots(11)$$

$$x-A=\log.\ V/V_o-\frac{2}{\sqrt{13}}\frac{\sqrt{13}}{2}\ \log.\ N/N_o-\frac{2}{\sqrt{29}}\frac{\sqrt{29}}{2}\ \log.\ D/D_o\ldots(12)$$

In these equations all terms of (12) are measured in terms of the unit for X. In equation (11) log. N/N_o and log. D/D_o will be measured in terms of the same unit as in (12) while the other terms will be measured in terms of the unit for Y. The factors 3/2 and 5/2 in (11) will then give lengths suited to the scale of Y for the components IJ and JK.

To realize practically these various vector relations we proceed as follows:

(1) Draw axes O_1X_1 and O_1Y_1 according to convenience. The conditions to be observed in selecting O_1 will be noted later.

(2) From a convenient point O_2 lay off a scale of

$$x-A=\log.\frac{V}{ND}-\log.\frac{V_o}{N_oD_o}=\log.\left[\frac{V}{ND}+\frac{V_o}{N_oD_o}\right]$$

and place at each point thus determined the corresponding values or scale division of V/ND.

Actually this operation may be carried out as follows:

(*a*) Take a series of values of V/ND over the range desired, as for example from 0.20 to 1.00.

(*b*) Select a unit for a logarithmic scale such that the log. over the range of these values, viz, log. 1.00 − log. 0.20 = log. 5, will cover a convenient length on the axis of abscissa.

(*c*) Locate the value $V/ND=1.00$ at a convenient point and find the distances from such point to the left for any other value x from the equation log. 1.00 − log. x = log. $1/x$. Lay off this distance to the left of the initial point, and at the point thus determined place the number x or its division mark for a scale of V/ND. See Plates

XXII–XXXVII. The point O_2 will then fall at the value of V_o/N_oD_o. In the diagrams of Plates XXII–XXXVII we have $V_o=100$ miles per hour $=440/3$ feet per second, $N_o=1{,}200$ revolutions per minute $=$ 20 revolutions per second, $D_o=10$ feet, and hence $V_o/N_oD_o=0.733$.

(3) From the same point O_2 and with the same unit lay off a scale of log. V/V_o, giving to V various values, as desired, and at each point thus determined place the value of V expressed in miles per hour. Actually this is realized by taking a similar scale as for V/ND, locating $V_o=100$ at $O_2=0.733$ on the scale of V/ND, and then putting in the other scale numbers and divisions as desired. See Plates XXII–XXXVII.

(4) Again, from O_3 and with a unit one-half that for the scales on O_1X_1, lay off on O_1Y_1 a scale of

$$y-B=\log.\left[P_e\times\frac{\Delta_o N_o^3 D_o^5}{\Delta\ N^3D^5}\right]$$

and place at each point values of $P_e/\Delta N^3D^5$ (homogeneous units).

Actually a scale or regular series of values of $P_e/\Delta N^3D^5$ is taken covering the desired range, as for example from 0.0004 to 0.0030 (homogeneous units), see Plates XXII–XXXVII. Then locating any point of this scale on the axis of ordinates according to convenience, the remainder is completed according to the scale adopted. Thus the distance from 0.0004 to 0.0005 will be log. 1.25, the distance to 0.001 will be log. 2.5, etc. This locates the scale according to convenience and without the need of specific reference to the point O_3 as origin.

(5) Lay off also from O_3 a scale for values of log. P_e (homogeneous units) and place at each point the value of P_e expressed in horsepower.

To this end write equation (7) twice, as follows:

$$y-B=\log.\Delta_o N_o^3 D_o^5+\log.\frac{P_e}{\Delta N^3D^5}\cdot\quad\cdots\cdots\quad(13)$$

$$y-B=\log.P_e+\log.\frac{\Delta_o N_o^3 D_o^5}{\Delta N^3D^5}\quad\cdots\cdots\quad(14)$$

The first of these gives a logarithmic scale for $P_e/\Delta N^3D^5$ beginning at a point log. $\Delta_o N_o^3 D_o^5$ from the origin, or O_3. The second gives a logarithmic scale of P_e beginning at O_3, while beyond are laid off the other terms indicated. Now, at any given point determined by (13) it is desired to find the corresponding value for P_e if the latter were laid off from O_3 as in (14).

At this point we shall evidently have

$$\log.P_e=\log.\Delta_o N_o^3\ D_o^5+\log.\ \frac{P_e}{\Delta\ N^3D^5}.$$

Whence $\Delta_o N_o^3\ D_o^5=\Delta N^3D^5$.

Let $y=$ any value of the ratio $P_e/\Delta\ N^3D^5$.

Then for the particular point where $\Delta N^3D^5=\Delta_o N_o^3 D_o^5$ we shall have

$$y=\frac{P_e}{\Delta N^3D^5}=\frac{P_e}{\Delta_o N_o^3 D_o^5}.$$

This will give the value of y corresponding on the scale to any assumed value of P_e. Other values may be found similarly, or one value of P_e being thus located on the scale the remaining scale points and values for P_e may be run in with the scale unit in a similar manner as for the scale of y.

(6) Through any convenient point draw a line $N_o Q$ as an axis of N and inclined at an angle $\tan^{-1} 3/2$ to the axis of X.

(7) Draw a similar line $D_o R$ as an axis of D and inclined at an angle $\tan^{-1} 5/2$ to the axis of X.

(8) Select any convenient point N_o on the axis of N for origin and with the unit of the scales on $O\ X$ lay off a scale of $(\sqrt{13}/2)$ log. N/N_o giving to N various values as desired and at the various points determined by the values of $(\sqrt{13}/2)$ log. N/N_o mark down the corresponding values of N expressed as revolutions per minute. For all values of $N > N_o$ the value will be positive and for all values of $N < N_o$ it will be negative. Lay off the positive values downward to the left and the negative values upward to the right. This will give a scale of N and N_o at the origin selected, and increasing downward and to the left as shown in Plates XXII–XXXVII. The reason for this particular direction of the scale of N will appear at a later point.

(9) Similarly and with the same unit lay off on the axis of D a scale of $(\sqrt{29}/2)$ log. D/D_o; and likewise increasing downward and to the left. See Plates XXII–XXXVII.

(10) At some convenient point on the diagram lay off an axis ST for values of log. Δ/Δ_o and take any convenient point for origin. From this point and with the unit of the scales on $O\,Y$ lay off a scale of log. Δ/Δ_o and mark at each point the value of Δ or altitude, as may be desired. For values of $\Delta > \Delta_o$ we shall have positive values and for values of $\Delta < \Delta_o$, negative values. Positive values should be laid off below the origin and negative values above. This will give a scale increasing downward and with Δ_o at the origin as seen in Plates XXII–XXXVII.

(11) It must be noted that the unit selected for the scales of O_1X_1 must be such that for this and for the various resulting scales, vertical and oblique, the range of values desired for the various quantities V/ND, V, N, D, Δ, and P_e will come within the scope of the diagram.

(12) For the various values of V/ND compute, for any given propeller, the values of $P_e/\Delta N^3D^5$ by the relation of equation (5) and plot the corresponding point on the diagram. The actual coordinate distances from O as origin will be $(x-A)$ and $(y-B)$ as in equations (7) and (8). With the scales above noted laid off on O_1X_1 and O_1Y_1, the spot for any pair of values V/ND and $P_e/\Delta N^3D^5$ may be, however, directly determined by suitable interpolation on the scales and without the laying off of logarithmic coordinates as such.

The location of the origin O and of the axes $O\,X$ $O\,Y$ is not necessarily within the scope of the diagram. All that is needed is a set of scales along O_1X_1, O_1Y_1 giving for V, V/ND, P_e and $P_e/\Delta N^3D^5$ the ranges needful in practical problems. Likewise for the oblique scales, they must be of suitable length to give the series of values of N/N_o and D/D_o needful in practical problems.

Thus in the diagrams of Plates XXII–XXXVII the actual origins for the horizontal and vertical scales are not indicated. The hori-

zontal and vertical axes are placed where convenient and likewise the oblique axes for N and D.

(13) In a precisely similar manner and to the same scales a curve is laid off for $P_u/\Delta N^3 D^5$.

Taking now the curve for P_e, let L denote for any given case the location of V on the velocity scale and U the location of the value of V/ND on the scale for this quantity. Then E on the corresponding curve will give on the suitable scale the value of $P_e/\Delta N^3 D^5$. Now draw a vertical LBC and take a point B representing P_e on the power scale. Then lay off BC equal to the value of log Δ/Δ_o taken on ST as the distance from the origin or Δ_o to Δ (Δ here assumed less than Δ_o). Then through C draw a line parallel to N_oQ and lay off CZ equal to $(\sqrt{13}/2)$ log. N/N_o, taken on N_oQ as the distance from origin or N_o to N (N here assumed less than N_o). Next draw ZE parallel to D_oR until it meets the curve for values of $P_e/\Delta N^3 D^5$ (D here assumed less than D_o).

Then the following relations are readily seen to obtain:

(*a*) The points U and E must lie on the same vertical, and the determination of one will necessarily fix the other.

(*b*) Hence if the value of V/ND is given (and hence the point U), together with N and D, the construction may be carried out in the reverse sense and a point L determined, which will mark the value of V.

(*c*) More generally the compound vector CZE must necessarily give, by verticals drawn through its extremities, the values of V and of V/ND, the former by a vertical drawn through C, the extremity of the N vector, and the latter by a vertical drawn through E, the extremity of the D vector.

(*d*) The power vector P_e is always assumed to be laid off with its origin as OX. This means simply locating the point B in accordance with the value of P_e, as laid off on the power scale $O_1\ Y_1$.

(*e*) The three vectors BC, CZ, and ZE may be laid off in any order according to convenience, and the result will be the same. In the diagram the full line CZE shows the two vectors for revolutions and diameter in the order $N\ D$, while the dotted line CZ_1E shows the same vectors in the order DN, starting in each case from the point C. Similarly, the vector BC may be put in between N and D, or adjacent to E, if desired. In figure 31 are shown four different combinations of algebraic signs, each with the six different sequences in which the vectors may be arranged. There are in all eight different combinations of signs, each with the six different sequences, or in all 48 different figures or patterns which these three vectors may effect. Those shown in figure 31 are simply for illustration.

(*f*) According to the data given, the actual construction may proceed from L to U, or vice versa.

(*g*) The power scale is taken positive upward. Hence LB is the positive direction of this vector. From the form of the second member of equation (7) it is clear that if $-\log. \Delta/\Delta_o$ is to be essentially positive; that is, if it is to have the same sign as P_e, then Δ must be less than Δ_o. Hence if BC is to be laid off upward, it must correspond to $\Delta < \Delta_o$. This accounts for laying off the scale on ST in the direction previously indicated.

Similarly if $-3 \log. N/N_o$ and $-5 \log. D/D_o$ are to be intrinsically positive, we must have $N < N_o$ and $D < D_o$ and hence the scales on OQ and OR must be laid off in such direction as to give, when meas-

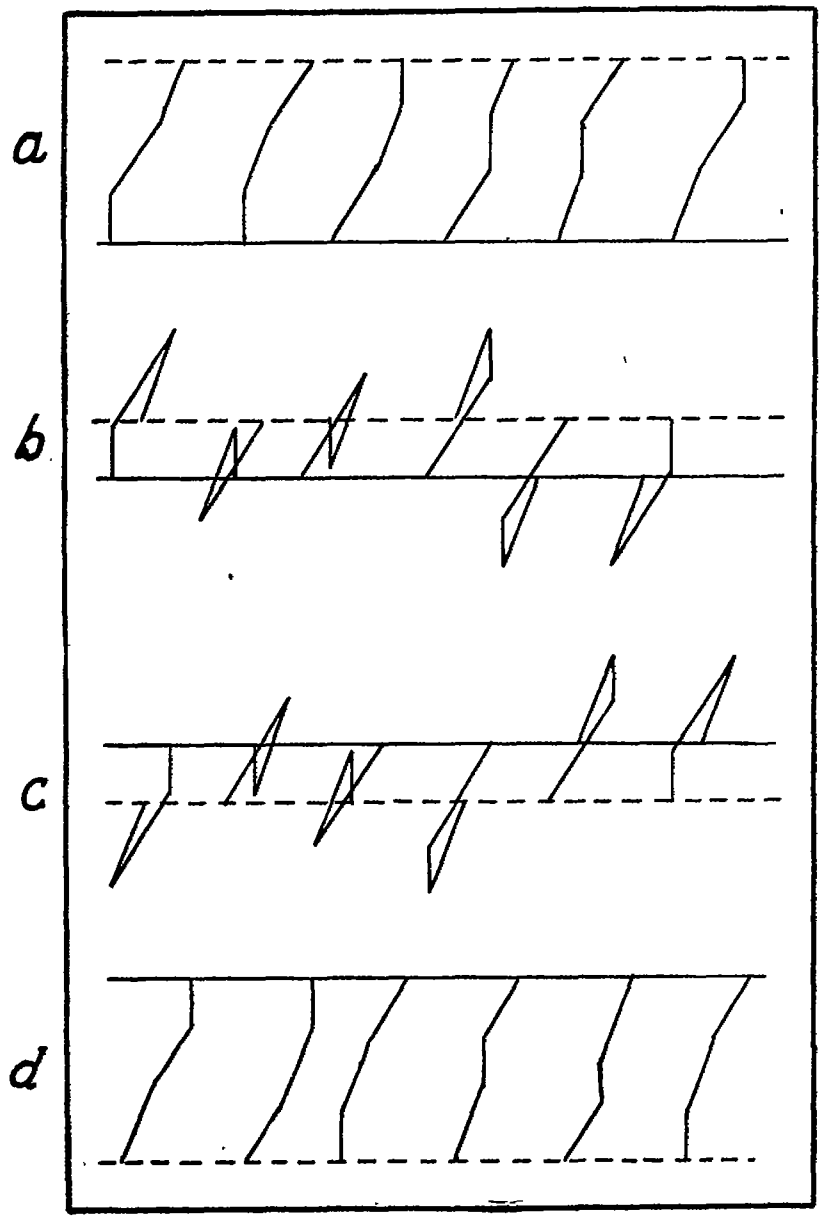

FIG. 31.

ured from the origin N_o or D_o a positive or upward component for $N < N_o$ and $D < D_o$. This again accounts for the direction in which these scales are laid off, as previously indicated.

(*h*) In the general case Δ, N and D may have any relation to Δ_o, N_o, and D_o and hence the values of the vectors representing density, revolutions and diameter may be positive or negative, or, of course, O. If positive, they will be laid off in the proper direction by taking BC, CZ and ZE in the direction of decreasing values of Δ, N and D along the corresponding axes, and if negative, they will be laid off in the proper direction by taking similarly, BC, CZ and ZE in the direction of increasing values. It is seen that the manner in which the scales of Δ, N and D are laid off on their respective axes will give the proper direction in which they should be laid off in order to combine properly with a positive value of P_e.

(*i*) Hence, if we are able to start with the point B (determined by the value of P_e), the remainder of the vector $BCZE$ should be traced out, each element parallel to its axis and in the direction in which the corresponding quantity lies, reckoned from the origin (Δ_o, N_o, or D_o). Furthermore, the last or closing element of this threefold vector must always end on the curve.

(*j*) On the other hand, if the data are such that we must start with the point U or E and work over to the point B, then the vectors EZ, ZC, and CB must be traced through in the inverse direction to that in which they lie on the axes of D, N, and Δ. The reason of this is obviously to so trace these vectors that when the diagram is completed and the vectors are traced through in the positive direction for P_e, then the other three will also follow in the same direction as that in which they lie on their axes and thus properly combine with a positive value of P_e, as noted above.

As a general rule or guide in the matter of the direction or sense in which the various vectors should be drawn, it thus results that irrespective of the particular direction in which the construction of the vector may require it to be drawn the final result must be such that when complete and when traced through from B to its end on the curve the various vectors must all be traced in the direction determined by the lay of the corresponding quantity Δ, N, or D from Δ_o, N_o, or D_o, on the respective axes for these quantities.

The variables involved in this logarithmic diagram are, as we have seen,

$$P_e, P_u, \rho, V/ND, \Delta, V, N, D.$$

In connection with any single construction, for example, that involving P_e, the variables are:

P_e, V/ND, Δ, V, N, D.

Certain of these may be known and the others unknown. The various cases thus arising may be briefly indicated.

In the following analysis the letters and vector symbols of figure 30 are used with fixed meanings as follows:

L means the point on axis O_1X_1, determined by V.
U means the point on axis O_1X_1, determined by V/ND.
B means the point on vertical through L, determined by P_e.
BC means the vector for Δ, counting from the point B.
CZ means the vector for N, counting from the point C.
CZ_1 means the vector for D, counting from the point C.
ZE means the vector for D, counting from the point Z.
Z_1E means the vector for N, counting from the point Z_1.
Z or Z_1 means the point of juncture of the vectors for N and D.

E means the point on the curve at the end of the vector CZE or CZ_1E and on the vertical through U.

We have then cases as follows:

(1) Known or assumed P_e, Δ, V, V/ND.
Unknown N, D.

With V find the point L, and thence with P_e and Δ find C. With V/ND find U and E. Then from C and E draw vectors parallel, respectively, to the axes of N and D and extend to the point of intersection Z. Then CZ gives N and ZE gives D.

(2) Known or assumed P_e, Δ, V, N.
Unknown V/ND, D.

Find C as in problem 1, and thence with N find Z. Then draw vector ZE parallel to axis of D to meet curve at E. Then ZE gives D and E gives U and V/ND.

(3) Known or assumed P_e, Δ, V, D.
Unknown V/ND, N.

Find C as in problem 1, and thence draw vector for D, giving Z_1. Then draw vector Z_1E parallel to axis of N to meet curve at E. Then Z_1E gives N and E gives U and V/ND.

(4) Known or assumed P_e, Δ, V/ND, N.
Unknown V, D.

With P_e and Δ find I_1 and draw horizontal line I_1I_2. With V/ND find U and E and through E draw parallel to axis of N vector Z_1E. From Z_1 draw line parallel to axis of D to intersection with I_1I_2 at C. Then vector CZ_1 gives D and C determines L and V.

(5) Known or assumed P_e, Δ, V/ND, D.
Unknown V, N.

Same general procedure as for problem (4) with appropriate interchange of N for D.

(6) Known or assumed P_e, V, V/ND, N.
Unknown Δ, D.

With V and P_e find L and B. With V/ND find U and E. Through E draw parallel to axis of N vector Z_1E and with N find Z_1. Then through Z_1 draw parallel to axis of D line to meet vertical through B. This determines C. Then vector CZ_1 gives D and BC gives Δ.

(7) Known or assumed P_e, V, V/ND, D.
Unknown Δ, N.

Same general procedure as for problem (6) with appropriate interchange of N for D.

(8) Known or assumed Δ, V, V/ND, N.
Unknown P_e, D.

With V and V/ND find L, U, and E. Draw vertical through L and through E parallel to axis of N vector Z_1E. Then N determines Z_1. From Z_1 draw parallel to axis of D line to intersection of vertical through L. This gives point C. Then Δ gives B, B gives P_e, and vector CZ_1 gives D.

(9) Known or assumed Δ, V, V/ND, D.
Unknown P_e, N.

Same general procedure as for problem (8), with appropriate interchange of N for D.

(10) Known or assumed Δ, V, N, D.
Unknown P_e, V/ND.

V/ND follows immediately from V, N, D.

Then proceed as in (8) or (9).

Entirely similar constructions may be carried out involving P_u by using the corresponding curves, dotted instead of full line, in the diagrams of Plates XXII–XXXVII.

EFFICIENCY.

The value of efficiency is given by

$$\rho = \frac{P_u}{P_e} = \text{ratio of coefficients for the two functions}$$

$$P_u/\Delta N^3 D^5 \text{ and } P_e/\Delta N^3 D^5.$$

Calling these y_1 and y_2, we have then

$$\log.\ \rho = \log.\ y_1 - \log.\ y_2.$$

Hence the intercept E_1E (fig. 30) is equal to log. ρ, and to evaluate the same we have only to go to the logarithmic scale for efficiency, and by any convenient means step from the origin a distance equal to E_1E. Where E falls, the efficiency may be read. This is readily done by dividers or paper strip.

There are a number of other constructions which may be worked out by the aid of these logarithmic diagrams and related to the determination of various characteristics of propeller performance such as the thrust T, torque Q, and a series of special dimensionless coefficients as listed by Marchis.[1]

DISCUSSION OF RESULTS.

Thrust in relation to pitch ratio.—As shown by the curves of thrust, this quantity for a given value of V/ND increases with pitch ratio. This is entirely in accord with the results to be anticipated.

Thrust in relation to blade area.—At any given value of V/ND the thrusts for the narow and wide blades are very nearly the same. There is a general tendency for the wide blade to show a greater thrust for moderate and low values of V/ND or for moderate and high values of the slip with a lesser thrust for large values of V/ND or very low values of the slip.

Thrust in relation to blade form.—The thrust developed for a given value of V/ND is in general greater for the straight blade than for the curved forms. There are, however, some exceptions to this general indication.

Thrust in relation to constant and variable pitch.—For a given value of V/ND there is but slight difference in the thrust. As a general rule, the value for variable pitch is slightly less than that for the uniform pitch.

Thrust in relation to blade section.—For a given value of V/ND the thrust developed by the cambered section is in general greater than that for the plain section.

Power in relation to pitch ratio.—As shown by the curves of torque and power, these quantities, for a given value of V/ND, increase with pitch ratio. This is entirely in accord with the results to be anticipated.

[1] See paper published in Second Annual Report National Advisory Committee for Aeronautics, p. 585.

Power in relation to blade area.—The wider propellers, having a smaller dynamic pitch than the narrow ones of the same form and nominal pitch, show a somewhat less power (effective and useful) than the narrow propellers at low slips or high values of V/ND.

They show the same values of power at values of V/ND somewhat less than those for maximum efficiency.

At the lower values of V/ND or high values of slip, the wide propellers show in general more power than the narrow.

An exception to the above statement is noted in cases of the pairs 29–30 and 33–34 in which cases the dynamic pitch of the narrow blades 29 and 33 is so much greater than that of the wide blades that the power for the wide blades, at all points within the range of the tests, is less than for the narrow blades.

Power in relation to blade form.—The power required for a given value of V/ND is in general greater for the straight blade propellers than for the curved forms. The following exceptions are noted:

Propeller No. 2, practically equal to No. 4.
Propeller No. 9, practically equal to No. 11.
Propeller No. 10, slightly less than No. 12.
Propeller No. 18, less than No. 20.
Propeller No. 26, practically equal to No. 28.
Propeller No. 30, practically equal to No. 32.

Power in relation to constant and variable pitch.—The variable and constant pitch propellers show little difference in power coefficients.

For the 0.9 pitch ratio the values are practically the same, two pairs showing slightly greater values for constant pitch and six pairs practically equal.

For the 0.7 pitch ratio one pair shows slightly less for the constant pitch, two pairs show practically the same and five pairs show slightly more for the constant pitch.

For the 0.5 pitch ratio one pair shows less for constant pitch, one pair shows practically same for both, six pairs show greater for constant pitch.

Power in relation to blade section.—The blades of cambered section show effective powers of from 11 per cent to 35 per cent greater than the noncambered sections. The difference is more marked in the narrow blades than in the wide ones.

Efficiency in relation to pitch ratio.—The maximum efficiency of propellers of given form otherwise increases with the value of the pitch ratio. The same is true for the efficiency over the usual working range. Broadly speaking, for equal values of V/ND efficiency increases with the pitch ratio. For very small values of V/ND, however, the lower pitch ratio propellers show the greater efficiency.

Efficiency in relation to area.—The narrow propellers show in general a higher efficiency throughout the working range, a higher maximum efficiency and a larger range.

There are a few exceptions. Certain of the wide cambered blades show a slightly higher efficiency at extreme slips than the corresponding narrow cambered blade. This is the case with 25–26, 29–30, 33–34, 37–38, 41–42.

In other cases the efficiency of the wide cambered blades is equal or more nearly equal to efficiency of the narrow cambered blades than is the case with noncambered forms.

Efficiency in relation to blade form.—In general the curved form of blade contour shows a higher efficiency in the working range as well as a higher maximum efficiency.

There are a few exceptions in the case of maximum efficiency but these are not marked. There are no exceptions in the case of the efficiency over the working range. The ranges of the efficiency are not markedly different.

Efficiency in relation to uniform or variable pitch.—The variable pitch propellers show in general less efficiency than those of constant pitch, both as to maximum efficiency and as to the efficiency over the working range.

There are one or two exceptions to this statement but these are not marked nor are the advantages of the uniform pitch propellers over those of variable pitch pronounced in character, there being a number of pairs in which the efficiency curves are practically identical for uniform and variable pitch.

The eff... 'range for variable and constant pitch is practically the same.

It is, of course, entirely possible that some other value of the angle of attack in the Drzewiecki system or some other distribution of pitch than th here exhibited might show values of the efficiency superior to those or uniform pitch.

Efficiency in relation to blade section.—The plain section propellers are markedly more efficient than those of cambered sections.

In general there is little difference in the range of efficiency, 11 pairs having equal range and other pairs varying some one way and some another, but without exception all show that the plain-face forms are more efficient in the working range as well as having a higher maximum efficiency.

REPORT No. 14.

PART III.

A BRIEF DISCUSSION OF THE LAW OF SIMILITUDE AS AFFECTING THE RELATION BETWEEN THE RESULTS DERIVED FROM MODEL FORMS AND THOSE TO BE ANTICIPATED FROM FULL-SIZED FORMS.

By William F. Durand.

THE LAW OF KINEMATIC SIMILITUDE IN ITS RELATION TO PROPELLER-MODEL EXPERIMENTS.

The use of model propellers as a basis for the prediction of the force reactions of full-scale propellers raises at once the question of the law of kinematic similitude, according to which we may hope to interpret the results of tests on model forms in terms of the performance of full-scale propellers.

The subject of kinematic similitude has been adequately treated by many authors and no general discussion of the problem is here required. It seems, however, proper to note certain aspects of the subject with special reference to its relation to the problem of the air propeller.

In its broader aspects the existence of a law of force relation between a model and a full-scale body implies the existence of a functional relation between the force reactions to which a body is subject and the various attendant determining conditions and dimensions.

These various parameters fall under the following groups:

(*a*) All dimensions and characteristics required to define the body as a geometrical and as a physical entity.

(*b*) All mechanical or dynamic characteristics of the medium in which it moves.

(*c*) The conditions of operation involving primarily the velocity relations between the body and the medium and between the body and the earth.

These various characteristics, or the variables which represent them, fall, furthermore, into two classes which we may denote by a, b, c, . . . x, y, z . . .

The variables a, b, c, . . . denote characteristics or parameters, the value of which may be definitely expressed or measured for any given body, thus a geometrical dimension, a velocity, the density or viscosity of a medium.

On the other hand, the variables x, y, z . . . denote characteristics or parameters, the numerical measure of which can not be directly determined for any given case. Such may be, for example, the influence of geometric form independent of dimension, of roughness or quality of surface, or of turbulence in the medium.

Then the functional relation referred to above may be expressed in the form:

$$F=f\,(a, b, c\ .\ .\ .)\ \phi\,(a, b, c, .\ .\ .\ x, y, z\ .\ .\ .). \quad . \quad . \quad . \quad (1)$$

Where F denotes a force reaction between the body and the surrounding medium (such as thrust on a propeller) and f represents a known or determinable and ϕ an unknown form of function.

The function ϕ, furthermore, contains variables $x, y, z\ .\ .\ .$, representing parameters or conditions which usually do not admit of numerical evaluation. In any event, the numerical values are not determinable in any specific case, and the form of the function itself is unknown.

The value of this function for any specific case is, therefore, wholly unknown and is not determinable by any purely algebraic process.

It is, however, determinable for any specific case by experimental procedure. This plainly implies placing the body under operating or functioning conditions, measuring the actual force F and taking note of the values of the parameters $a, b, c\ .\ .\ .$

With these known, the numerical value of the function f is directly found and thence that of ϕ. This, let us say, is for a body A. Suppose then another body B with different values of the parameters $a, b, c\ .\ .\ .$, but for which we may assume the same numerical value of ϕ. If such assumption is justifiable, we may then find immediately the value of F for the body B.

The key to the whole procedure is the use of the *same* numerical value of ϕ for A and for B. Under what conditions may this be done?

Assume that the function ϕ is made up of two functions expressed in the form:

$$\phi\,(\phi_1\,(abc\ .\ .\ .)\ \phi_2\,(xyz\ .\ .\ .))$$

Suppose further that ϕ_1 is a known function while ϕ_2 is unknown, as also the numerical values of $x, y, z\ .\ .\ .$ Suppose further that for the two bodies A and B the parameters $a, b, c\ .\ .\ .$ are so chosen that ϕ_1 has the same numerical value for each; also that the conditions on which $x, y, z\ .\ .\ .$ are assumed to depend are the same in both A and B and hence $x, y, z\ .\ .\ .$, whatever may be their actual values are assumed to be the same for both A and B.

Then under these conditions it is clear that ϕ will have the same value for both A and B and a value determined experimentally for A may be used for B or vice versa.

The conditions for a relation of this character are, therefore, the following:

(1) The existence of a function ϕ_1 and involving measurable parameters such as a geometrical dimension, velocity, density, viscosity, coefficient of elasticity, etc., and with numerical values so chosen that the numerical value of ϕ_1 will be the same for both A and B.

(2) The assumption of equal values for A and B of parameters $x, y, z\ .\ .\ .$ based upon equal conditions or characteristics the influence of which they are assumed to measure. Thus if x be assumed to relate to the influence of the material, texture, or quality of the surface, then if both bodies are given, as nearly as may be, surfaces of the same material, texture, or quality, we assume equal values of x. Again if y is assumed to relate to the influence of geometrical form as such and independent of absolute dimension, and if we make the geometrical form the same for both A and B, we assume equal values of y.

Form as such may, of course, be determined by geometrical dimension. In detail, however, unless of some definable character, a form will require a vast (at the limit an infinite) number of dimensions for its determination. If, therefore, the forms of the bodies A and B were dissimilar, a vast number of geometrical measures and dimensions would require to be included in the functions under consideration. Due to this fact, no attempt has been made to develop or use any such functional relation except in the case of bodies or forms which exhibit some considerable degree of geometrical similarity and which permit of definition in terms of a small number of controlling dimensions plus the characteristic involving geometrical similarity. Thus spheres are defined by the diameter plus the characteristic of sphericity, cylinders by the diameter and the length plus the characteristic of a constant circular cross section.

Again with the assumption of complete geometrical similarity, bodies are determined by a single defining dimension plus the stated form.

The question may, therefore, arise as to whether there is any parameter y to which the influence of form as such may be related and permitting the assumption that for like forms we may assume equal values of y or, in other words, equal influences on the value of the function ϕ_2.

If, then, these general conditions and assumptions are accepted, it is clear that between the two values of the force F for the two bodies A and B functioning under suitably related sets of conditions, there will exist a determinable relation, and a value for A found experimentally may be used to determine the corresponding value for B, or vice versa.

From this analysis it will be clear that the justification of this general procedure will depend on the following:

(1) Whether all the variables, parameters and conditions upon which the force relation depends are, as a matter of fact, included in the list of $a, b, c \ldots x, y, z \ldots$ represented in the formula.

(2) Whether, in point of fact, equality of condition between the two bodies, such as quality of surface or geometrical form, is a justification for assuming equal values of the function ϕ_2.

The latter of these two conditions merits some further consideration. It raises immediately the questions:

Does geometrical form as such, and independent of absolute dimension, constitute an independent determining characteristic for force relations such as those under present consideration?

Does quality or material, or texture of surface (expressed usually in terms of smoothness or roughness), constitute an independent determining characteristic for force? and in particular, to what extent is the assumption of geometrical form as an independent parameter inconsistent with the assumption of equality of surface texture or smoothness?

Regarding the latter point, it is clear that, carried to the limit necessary in order to include molecular or short range forces, such as those responsible for the formation of turbulence near the skin of a body moving in a mobile medium, geometrical similarity and equal degrees of smoothness are mutually inconsistent. Geometrical similarity implies an increase of dimension in the irregularities consti-

tuting texture or roughness of surface. Equal degrees of roughness or like qualities of texture in bodies of different over-all dimension implies a lack of geometrical similarity carried to the limit of surface texture.

Again including forces of molecular order the question may arise as to the influence of the actual substance of the surface as between the two bodies A and B.

It seems clear that no course of abstract reasoning can serve to definitely determine the extent of inconsistency which may be involved in these considerations. It seems equally clear that we must admit that the assumption of equal values of ϕ_2 resulting from similar qualities or conditions on which ϕ_2 is assumed to depend, does not rest on an entirely rational foundation; or otherwise that such assumption can not be justified by abstract reasoning and the extent to which it may be justified must, therefore, be sought ultimately in actual experience.

We find further, in some cases, that it seems desirable to omit the influence due to certain parameters, especially in the a, b, c class. In such cases again it is clear that experience alone can furnish a guide as to the extent to which the assumptions above outlined can be safely made and a law of kinematic similitude usefully employed.

Having in view then the general problem and remembering the uncertainty whether all the parameters of the a, b, c class are included, the need occasionally of definitely omitting some of them and the lack of a complete rational basis for assuming equality in the numerical values of the ϕ_2 function, it is clear that the final justification for the use of a law of kinematic similitude must be sought in actual experience rather than in abstract reasoning.

Turning now more specifically to the screw propeller, the chief parameters on which the operation must depend may be listed as follows:

(a) Characteristics of the propeller as a geometrical and physical body.
- (1) The diameter or general determining dimension.
- (2) The pitch of the helicoidal surface employed for the driving face. This may have two different modes of specification, viz.:
  - (a) The single value of the pitch if uniform.
  - (b) The distribution of values if variable.
- (3) The form of the contour bounding the blade or helicoidal surface employed.
- (4) The area of the blade on the driving face.
- (5) The cross section or thickness of the blade. This may have two modes of specification, viz.:
  - (a) Areas of cross sections and their distribution radially.
  - (b) Forms of cross sections.
- (6) The form and dimensions of the hub or central body carrying the blades.
- (7) The character and finish of the blade surface.
- (8) The density of the blade material.
- (9) The coefficient of elasticity of the blade material.

(b) The characteristics of the medium.
- (10) Density.
- (11) Viscosity.
- (12) Compressibility (velocity of sound).
- (13) Character and extent of turbulence or departure from homogeneous conditions.

(c) The characteristics of operation.
- (14) Speed of translation or speed of advance.
- (15) Speed of rotation.

Characteristic (12) is most conveniently represented by the velocity of sound in the medium which, as is well known, is jointly dependent on the density and on the coefficient of elasticity.

We have thus, without going too far into detail, some fifteen variables or conditions, any one of which may exercise an important influence on the results realized from the propeller.

These various parameters, falling in part in the a, b, c class and in part in the x, y, z class are in any case far too numerous to permit of the practicable development of a functional relation of the character contemplated. If, however, we assume full geometrical similarity then a single controlling dimension, such as diameter or pitch, plus the assumed geometrical form, serves to completely define a given propeller, in geometrical form.

We are, therefore, reduced to characteristics 1, 7, 8, 9, 10, 11, 12, 13, 14, 15 plus form. Of these 1, 8, 9, 10, 11, 12, 14, 15 belong in the a, b, c class of parameter and 7, 13 plus form belong in the x, y, z class.

In order, therefore, to determine our functional relation, we must assume like conditions regarding 7 and 13, and this with similar forms is then assumed to justify the assumption of equal values of the variables representing them in the function ϕ_2. If this is indeed the case, we may omit x, y, z from the expression of the functional relation and write

$$F=f\ (abc\ \ .\ .\ .\ )\ \phi\ (\phi_1\ (abc\ \ .\ .\ .)\ )\ .\ .\ .\ .\ .\ . \qquad (2)$$

It only remains now to discuss the development of the form of the functions f and ϕ_1.

The theory of dimensional units, as is well known, furnishes the most general method for the determination of such functions and functional relations.

Let us assume the following notation:

	Dimension.
Force (thrust), T	MLT^{-2}
Diameter, D	L
Density of blade material, Δ_1	ML^{-3}
Coefficient of elasticity of blade material, E	$ML^{-1}T^{-2}$
Density of medium, Δ	ML^{-3}
Viscosity of medium, μ	$ML^{-1}T^{-1}$
Velocity of sound in medium, U	LT^{-1}
Velocity of advance, V	LT^{-1}
Revolutions, N	T^{-1}

Then, applying the theory of dimensional homogeneity,[1] we readily find

$$T=\Delta D^2 V^2 \phi\left(\frac{DN}{V},\ \frac{\mu}{DV\Delta}\ \ \frac{U}{V}\ \ \frac{E}{V^2\Delta_1}\ \ \frac{\Delta_1}{\Delta}\right)\ .\ .\ .\ .\ .\ .\ . \qquad (3)$$

We have now to examine the quantities entering into ϕ in order to determine the conditions under which this function may be given the same value for two different propellers. Obviously, to this end the five functions DN/V, $\mu/DV\Delta$, U/V, $E/V^2\Delta_1$, and Δ_1/Δ must have the same values for each propeller.

The first condition is readily fulfilled, implying as it does that the two propellers are operating under equal slip, or, otherwise, that the

[1] See Buckingham, "Transactions American Society of Mechanical Engineers." 1915.

ratio between the circumferential velocity at the tip of the blade and the speed of advance is the same in each case.

With the second function, assuming each propeller working in air, we shall have the kinematic viscosity μ/Δ the same (except as the value may be modified by difference in pressure change in the air while passing through the propellers). Then the remaining terms imply equal values of the product DV, or velocity varying inversely with the diameter. This is not an easy condition to be fulfilled, since it calls for very high values of V with reduced values of D.

Again, if the medium is air for each propeller, the value of U will be the same in each case (except again as the characteristics of the air may be differently affected by the pressure changes in passing through the propellers). This will require equal values of V in order that the ratio U/V may be the same in the two cases.

With the fourth and fifth functions, assuming air as the medium in each case, Δ will be the same, and hence Δ_1 the density of the blade material must also be the same. Then unless the values of E widely differ in their relation to Δ_1, it will follow that V^2 and V must be the same or nearly the same for the two forms A and B.

The introduction of these characteristics of the blade material, E and Δ_1 implies the consideration of some degree of distortion and hence change of form. The assumption of geometrical similarity in the two propellers implies either no distortion under load or distortion to like degree so that when under load the two forms will still be geometrically similar. Taking into account centrifugal force in producing tension at any given cross section of the blade, the forces acting at right angles to the radius in producing bending stress and centrifugal force in modifying such bending stress, it may be shown that like geometrical forms under load imply equal values of the two functions $E/V^2\Delta_1$ and Δ_1/Δ. That is, the conditions for equal values of ϕ in the two cases are also the conditions which imply like geometrical forms when distorted under load.

The five conditions, therefore, substantially reduce themselves to the following:

(1) DN/V the same.
(2) DV the same.
(3) V the same.
(4) $E/V^2\Delta_1$ the same.
(5) Δ_1/Δ the same.

Obviously conditions (1), (2), (3) are not independent. From any two the other must follow.

Obviously the only way in which these five conditions can be simultaneously fulfilled is by making D, N, V, E, and Δ_1 the same throughout, and thus the two cases become identical.

In model experiments, however, we are only interested in such cases as will permit the use of different values of D, a small value for the model and a larger value for the full-sized form.

If, then, D is not the same, we may have the choice of simultaneously meeting conditions (1), (2), and (5), or (1), (3), (4), and (5).

Condition (2) would require for the model very high values of V and would, therefore, be difficult of realization. Conditions (1), (3), (4), and (5) require the same values of V/DN, of V, of DN, of E, and of Δ_1. These conditions may be met, up to the point at least of the ability to produce, under experimental conditions, values of the

wind-stream velocity V and of the product DN, equal to those met with in actual practice.

The omission of condition (2) is, furthermore, equivalent to neglecting the influence of viscosity. Where the movement is so excessively turbulent as that about an air propeller, this seems permissible without the danger of involving an error of sensible magnitude.

In any event, in order to reach a practical solution of the problem we may omit the influence of viscosity, and the law of comparison commonly employed is then based on the remaining conditions (1), (3), (4), and (5), requiring for both model and full-sized propeller the following:

(1) Equal values of the ratio V/ND.

(2) Equal values of the wind speed V and hence,

(3) Equal values of the product DN.

(4) The same material for both model and full-size propeller, or in any case equal values of E and of Δ_1.

With this understanding equation (3) becomes

$$T=\Delta D^2 V^2 \varphi\left(\frac{V}{ND}\ \frac{U}{V}\ \frac{E}{V^2\Delta_1}\ \frac{\Delta}{\Delta}\right) \quad . \quad . \quad . \quad . \quad . \quad . \quad . \qquad (4)$$

The form of equation (4) is then equivalent to the assumption that under conditions giving constant values of these functions, the thrusts (or other like forces) on two propellers geometrically similar are related as the densities of the media, as the squares of the diameters and as the squares of the speeds.

The forms of equations (3), (4) have been developed on the assumption that the force in question is any characteristic force such as thrust. The same general form and involving the same functions for the make up of φ will obviously hold for any other force. Hence the torque, the effective work, the useful work and the efficiency will also all be expressible in terms of the same functions which make up the functions φ. Hence the conditions for similarity with reference to work and efficiency are identical with those for a characteristic force such as thrust.

In particular we shall have for useful work P_u and effective work P_e.

$$P_u=TV=\Delta D^2 V^3 \phi_1.$$
$$P_e=2\pi QN=2\pi\Delta D^3 V^2 N\phi_2.$$

But the relation between $2\pi DN$ and V may be readily thrown into ϕ_2 and we may thus write

$$P_e=D^2 V^3 \phi_2.$$

Hence

$$\text{Efficiency}=\rho=P_u/P_e=\frac{\phi_1}{\phi_2}.$$

This equation is equivalent to the assumption that two propellers fulfilling the conditions for equal values of the functions ϕ will have equal efficiencies.

Experiment indicates that the influence of compressibility and of blade distortion are on the whole small and may, in many cases,

be neglected. With this further departure from the conditions indicated by equation (3) we have

$$T=\Delta D^2 V^2 \phi\left(\frac{DN}{V}\right)$$

or as it is usually more convenient to write

$$T=\Delta D^2 V^2 \phi\left(\frac{V}{DN}\right) \quad . \quad . \quad . \quad . \quad . \quad . \quad . \quad . \quad (5)$$

This gives but a single condition, V/DN the same implying equal slips for model and full size propeller.

The equation in this form is then equivalent to the assumption that at equal values of V/DN, or of the slip, the thrusts (or other like forces) on two propellers, geometrically similar, are related as the densities of the media, as the squares of the diameters and as the squares of the speeds. Also that at equal values of V/ND, or of the slip, the efficiencies will be equal.

We have thus three factors, viscosity, compressibility and distortion, the influence of which, in determining the conditions of kinematic similitude, becomes of practical importance. As we have already seen, the first of these can not be readily included, while, to a degree at least, the other two can. Cases will often arise, however, when it will be desired to extend the results of model experiments to speeds other than those under which the experiments were made, and the extent to which error is thus introduced becomes of interest.

A considerable amount of experimental data indicates that while the influence of these three factors is measurable under carefully controlled conditions and with due care in measurement, the aggregate error due to their omission is often not serious, and hence for many practical purposes the conditions of similitude as indicated in (5) will furnish satisfactory results. At the same time it is undoubtedly true that, so far as may be practicable, the speeds should be the same for both model and full-size propeller, thus including the influence of compressibility and distortion under load.

The law of kinematic similitude, as actually applied, involves, therefore, the possibility of error under two heads:

(*a*) Departure from the conditions needed to insure equal values of the function ϕ so far as dependent on the a, b, c class of variables, and as discussed just above.

(*b*) Departure from the conditions needed to insure equal values of the function ϕ so far as dependent on the x, y, z class of variables, and as discussed at an earlier point.

With these two possibilities in view it will be apparent that in its practical application the law of kinematic similitude must rest its authority and utility upon actual experience. To this end there are needed further carefully conducted experiments on models and full-size forms, similar geometrically, and under conditions calculated to furnish a somewhat more definite measure of the influence of these various departures from the indicated conditions.

With such relation established and expressed in terms of a series of factors or percentages, the use of the data derived from model experiments would be attended by increased confidence as to reliability and general availability for design purposes.

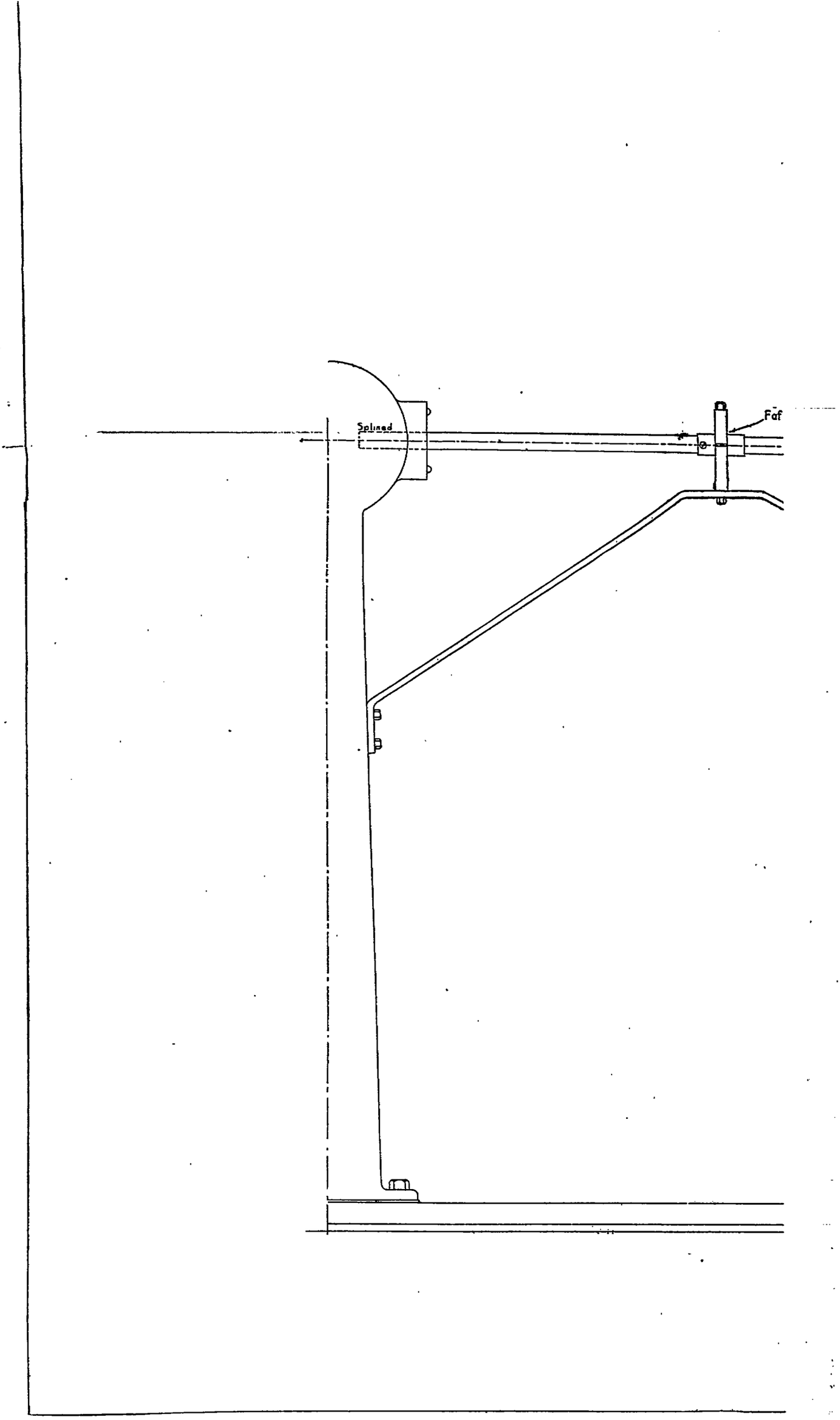
Splined
Faf

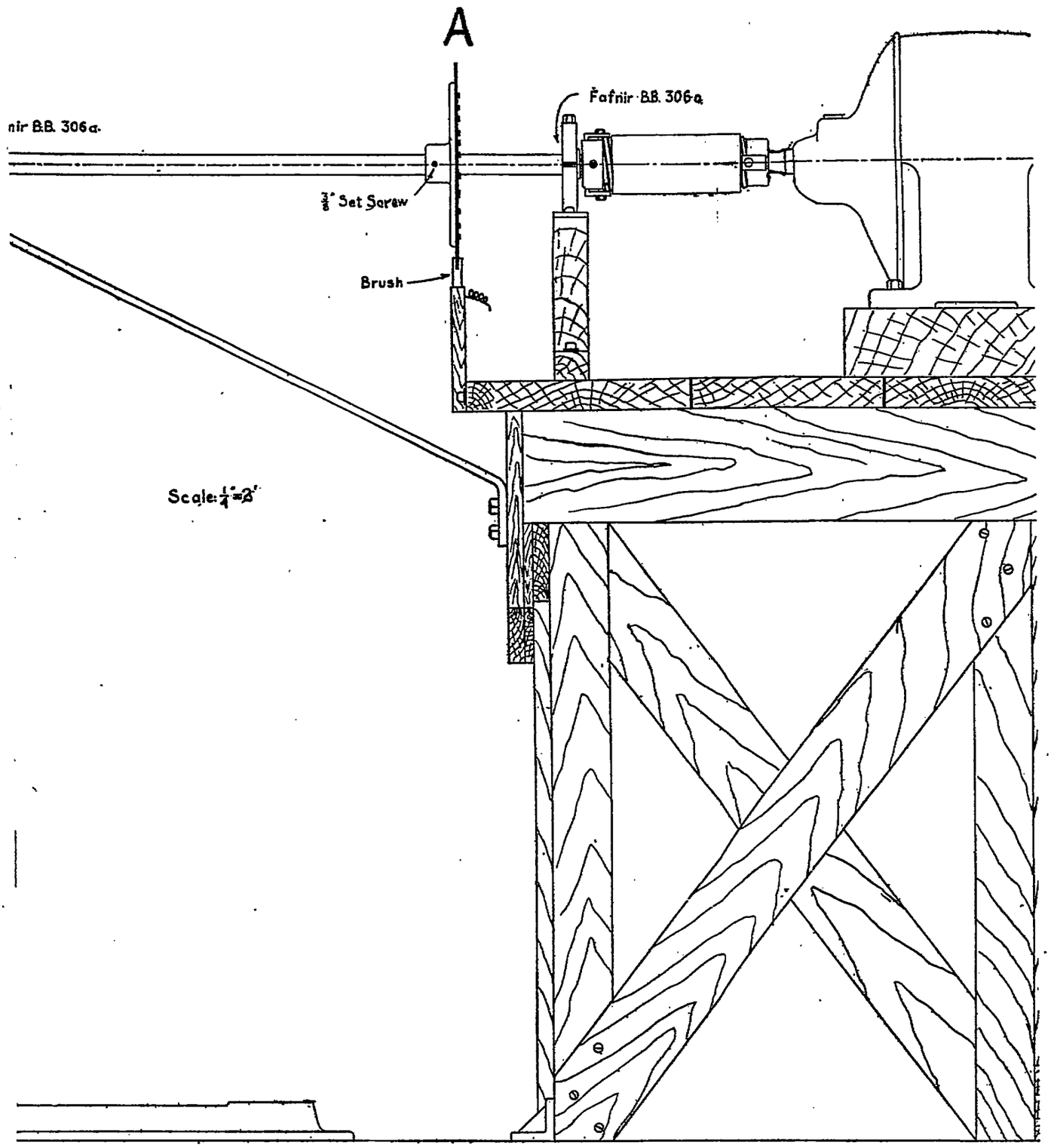

AERODYNAMICAL LABORATORY
STANFORD UNIVERSITY CAL.
TORSION DYNOMOMETER

PLATE I.

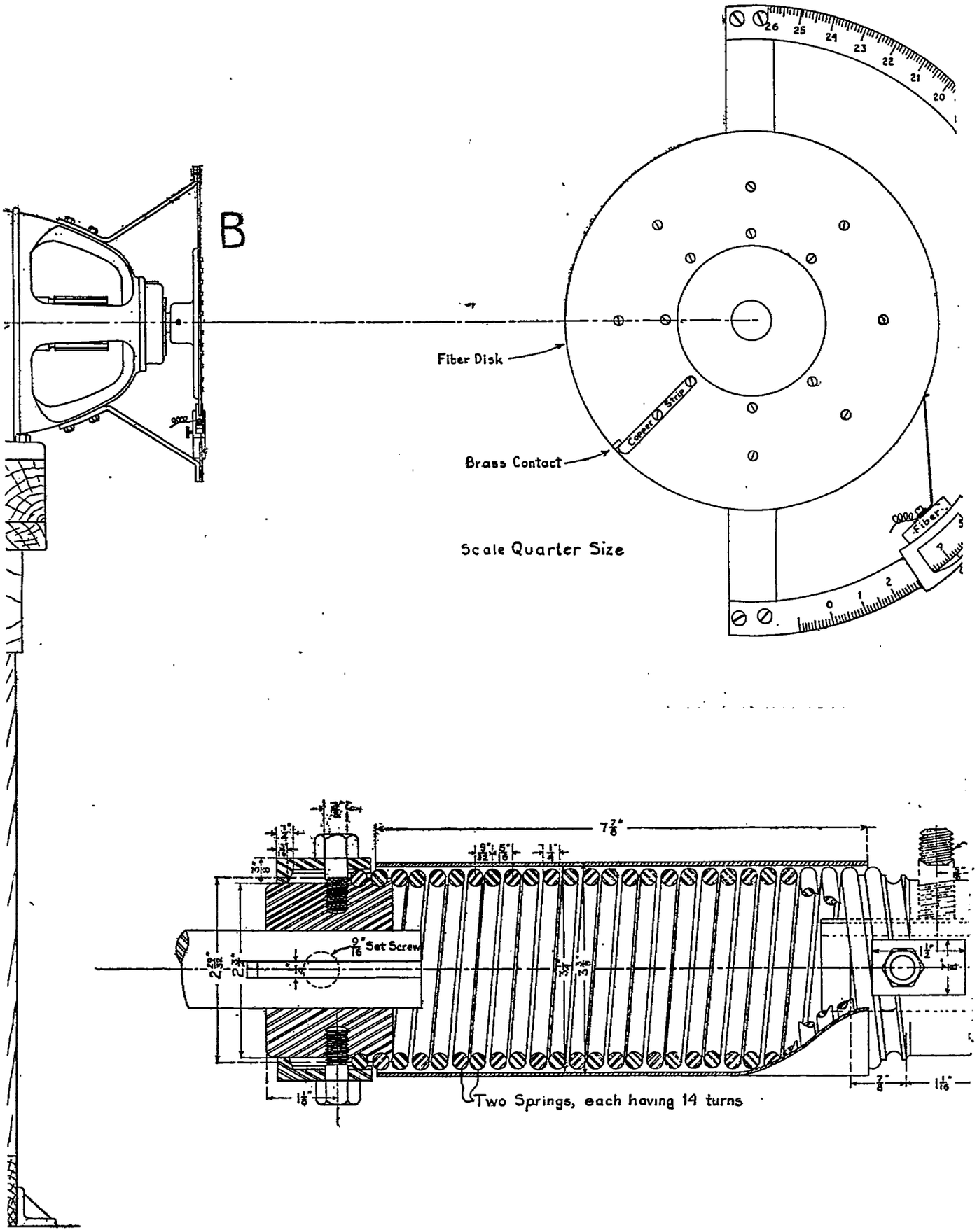
B
Fiber Disk
Brass Contact
Copper Strip
Fiber
Scale Quarter Size
Set Screw
Two Springs, each having 14 turns

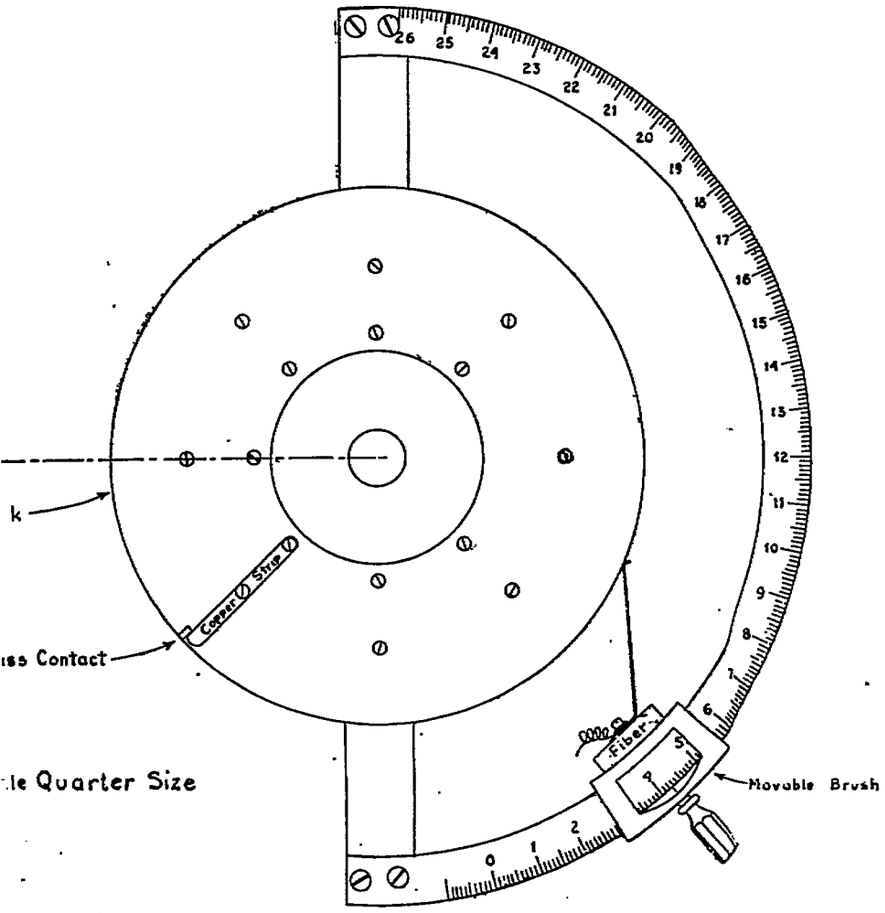

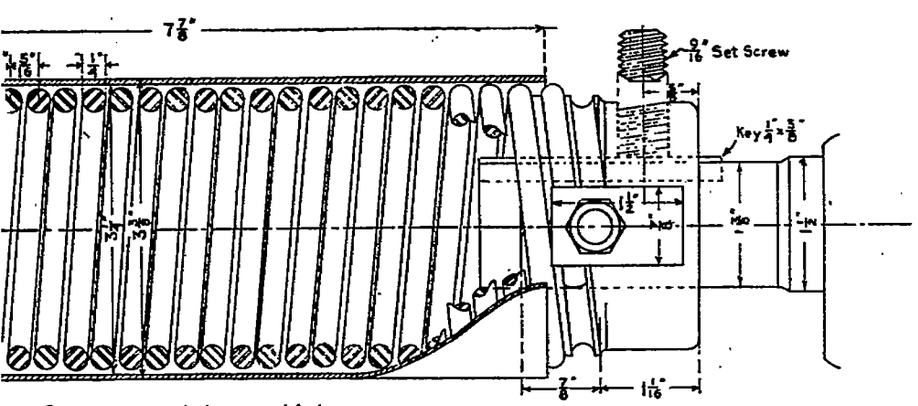

wo Springs, each having 14 turns

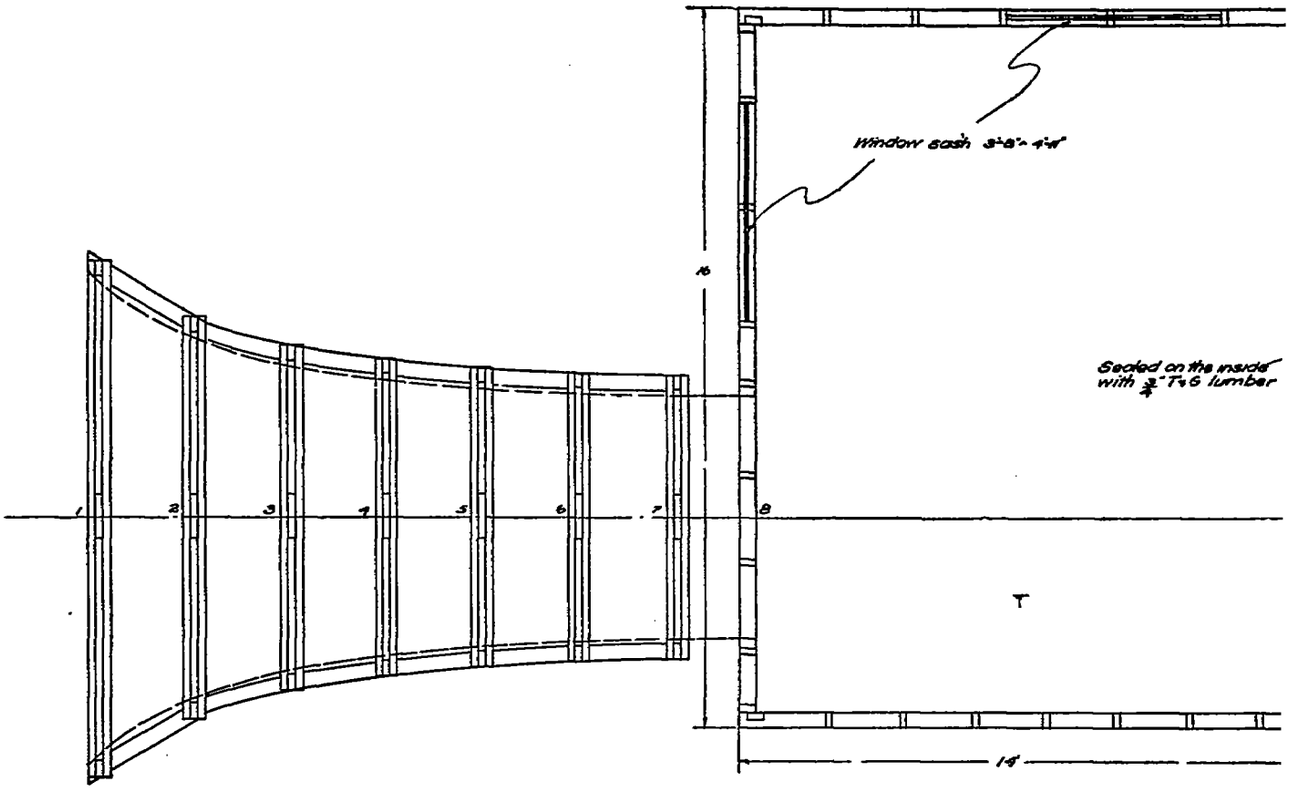
Window sash 3'-8"x 4'-4"
Sealed on the inside with 3/4" T&G lumber
16
14
1
2
3
4
5
6
7
8

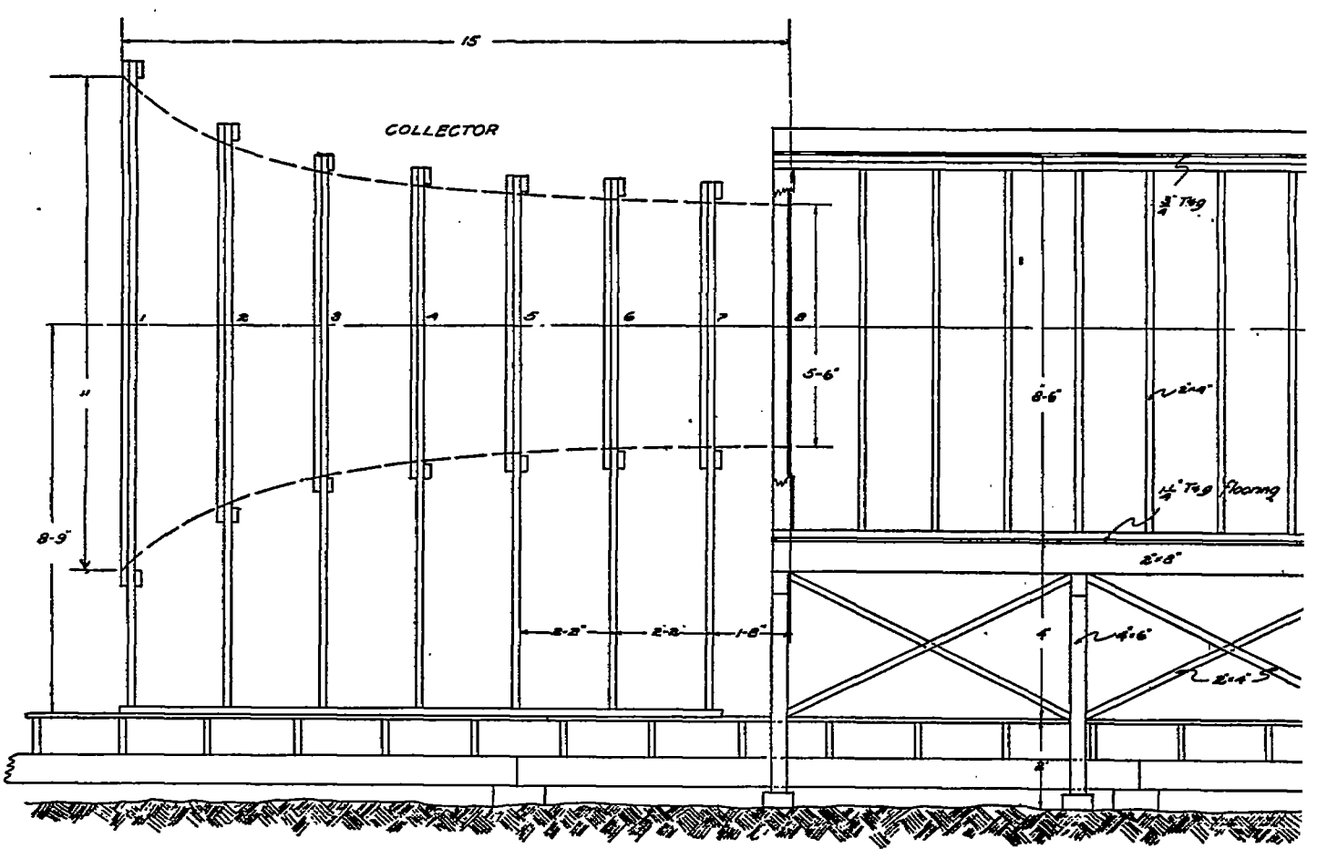
15
COLLECTOR
11
8-9"
5-6"
8-6"
3/4" T&G
2"x4"
1 1/4" T&G flooring
2"x8"
4"x6"
2"x4"
2-2"
2-2"
1-8"
1
2
3
4
5
6
7
8

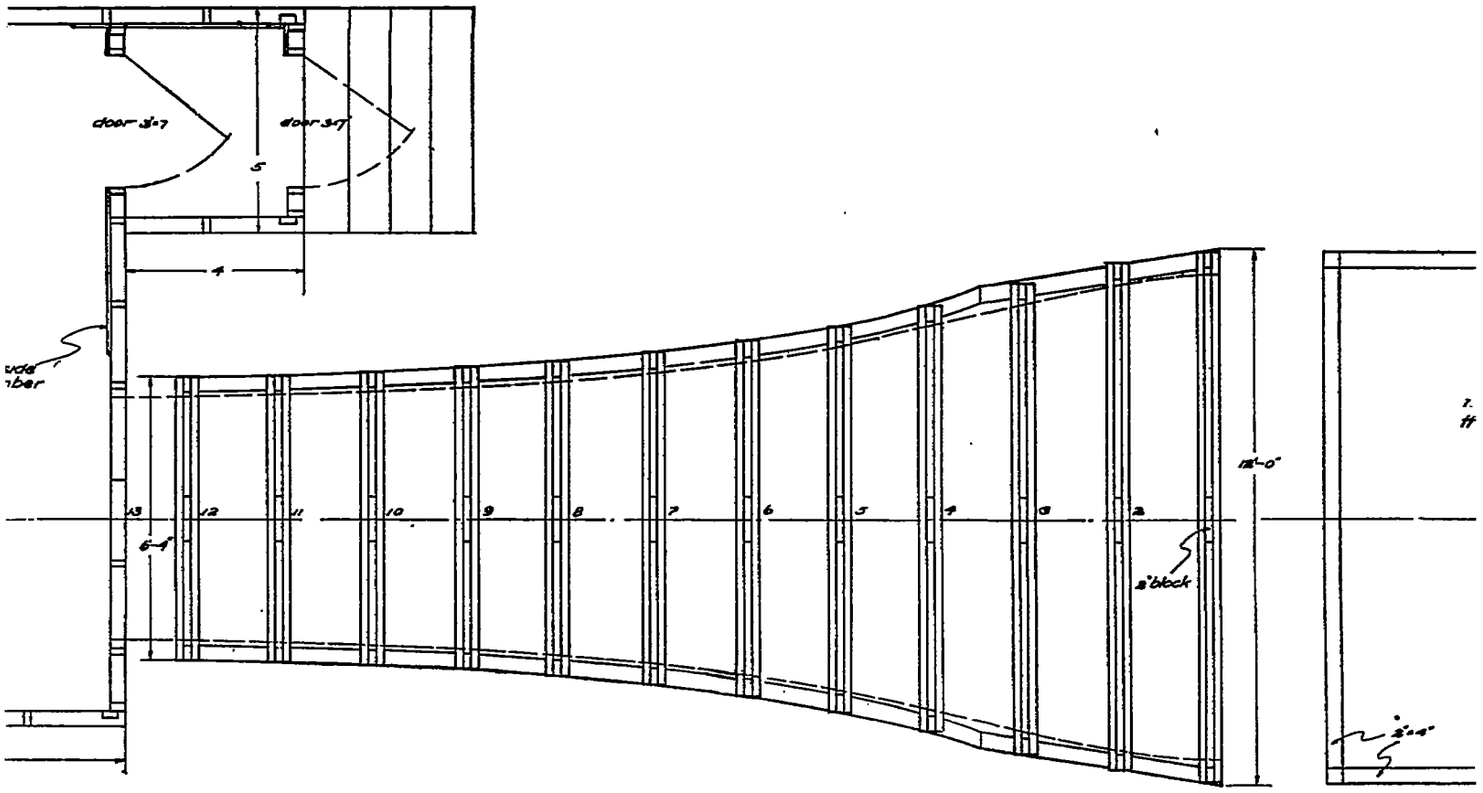

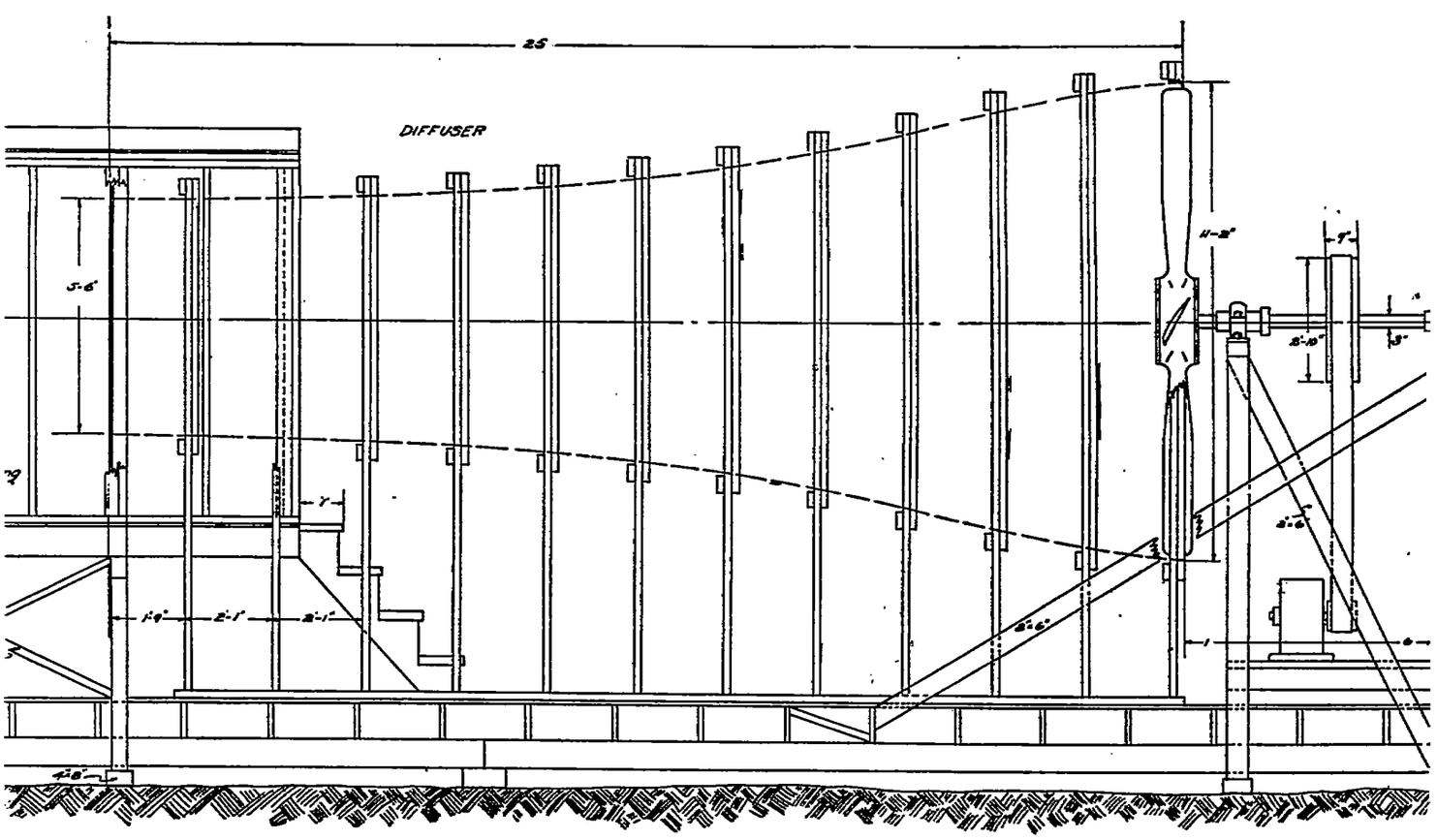

(19)

AERODYNAMICAL LABORATORY
STANFORD UNIVERSITY, CAL.
WIND TUNNEL
SCALE 1/2" = 1'-0" MARCH 1/12

PLATE II.

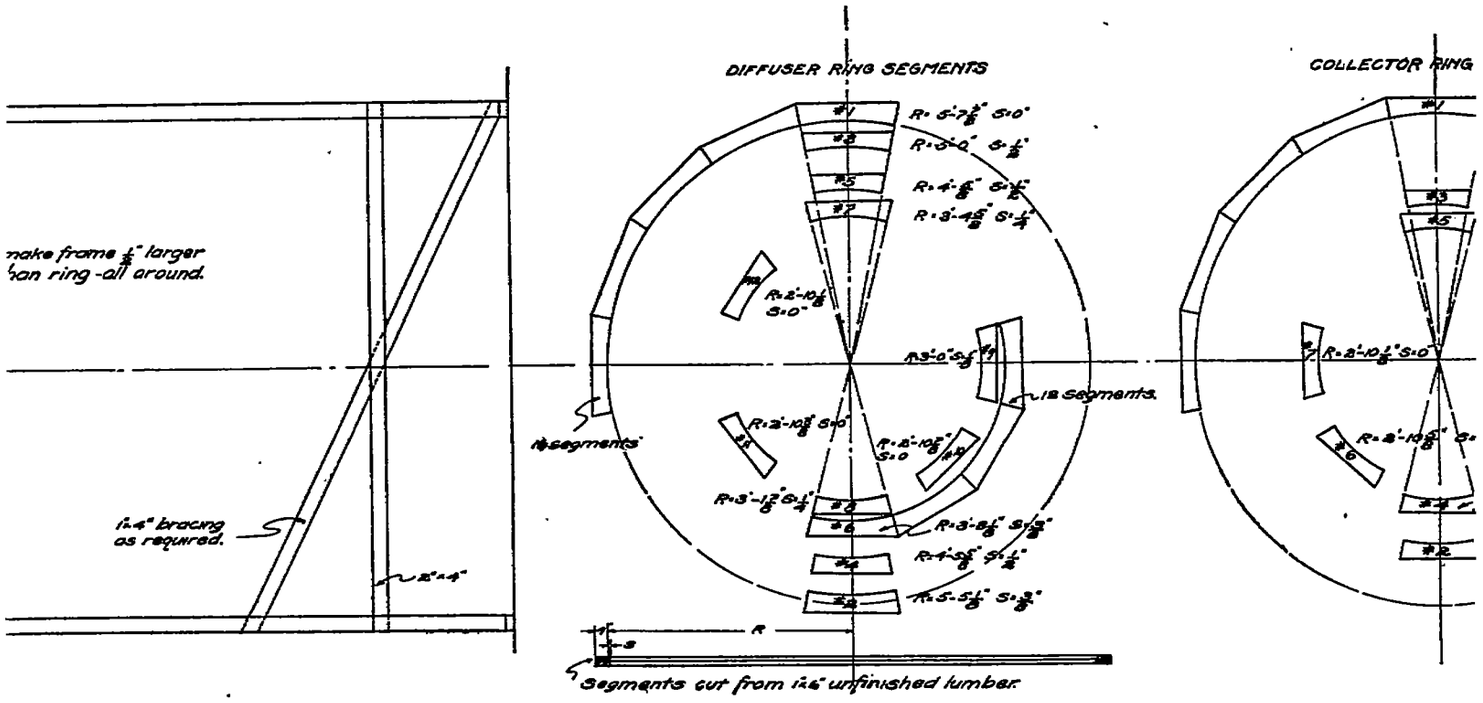
make frame 1/8" larger than ring -all around.
1"x4" bracing as required.
2"x4"
DIFFUSER RING SEGMENTS
COLLECTOR RING
12 segments
12 segments
Segments cut from 1"x6" unfinished lumber.

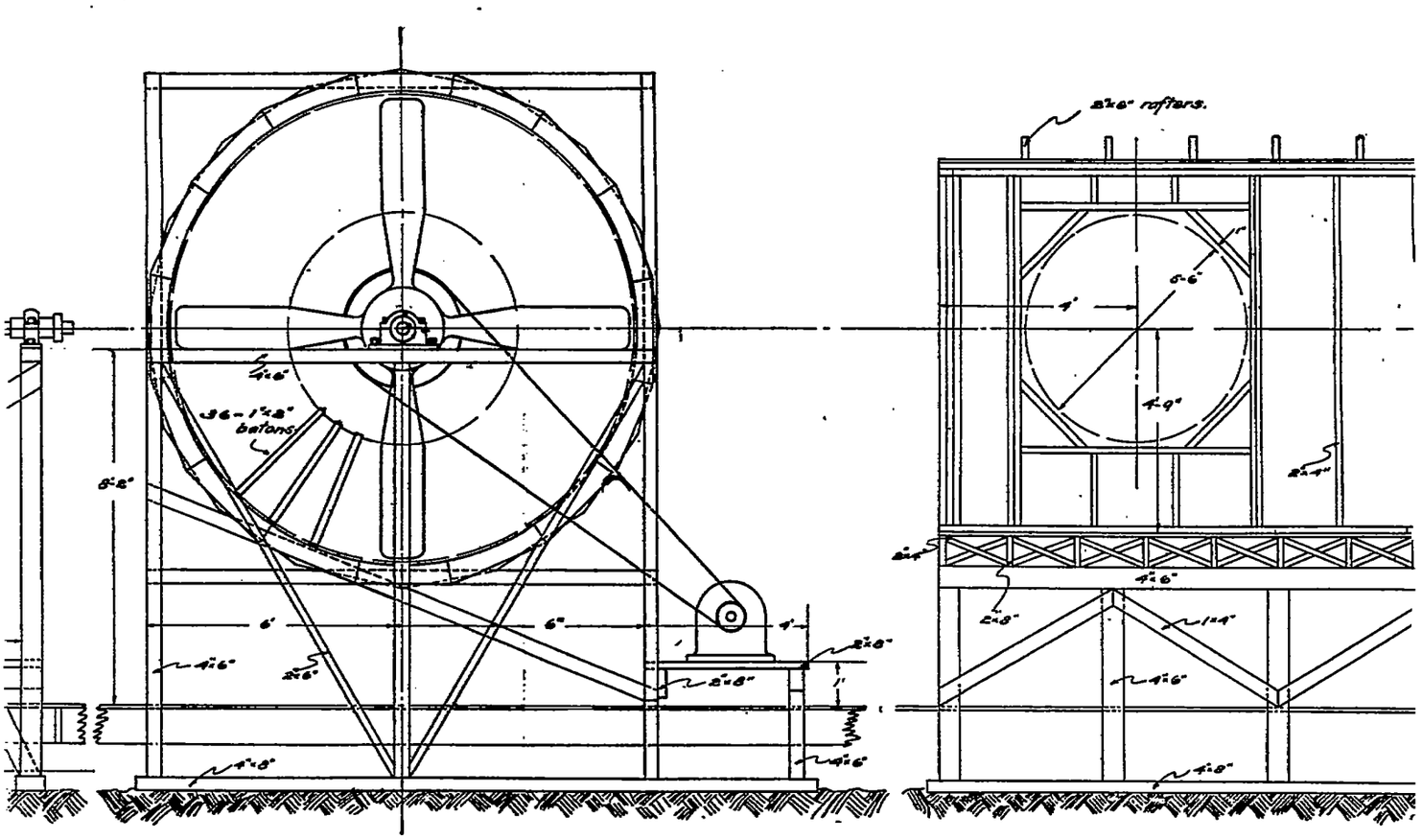
2"x6" rafters.
36 - 1"x2" batons
8'-2"
6'
6"
4'
4'-9"
5'-6"
2"x4"
4"x6"
2"x8"
1"x4"
4"x8"

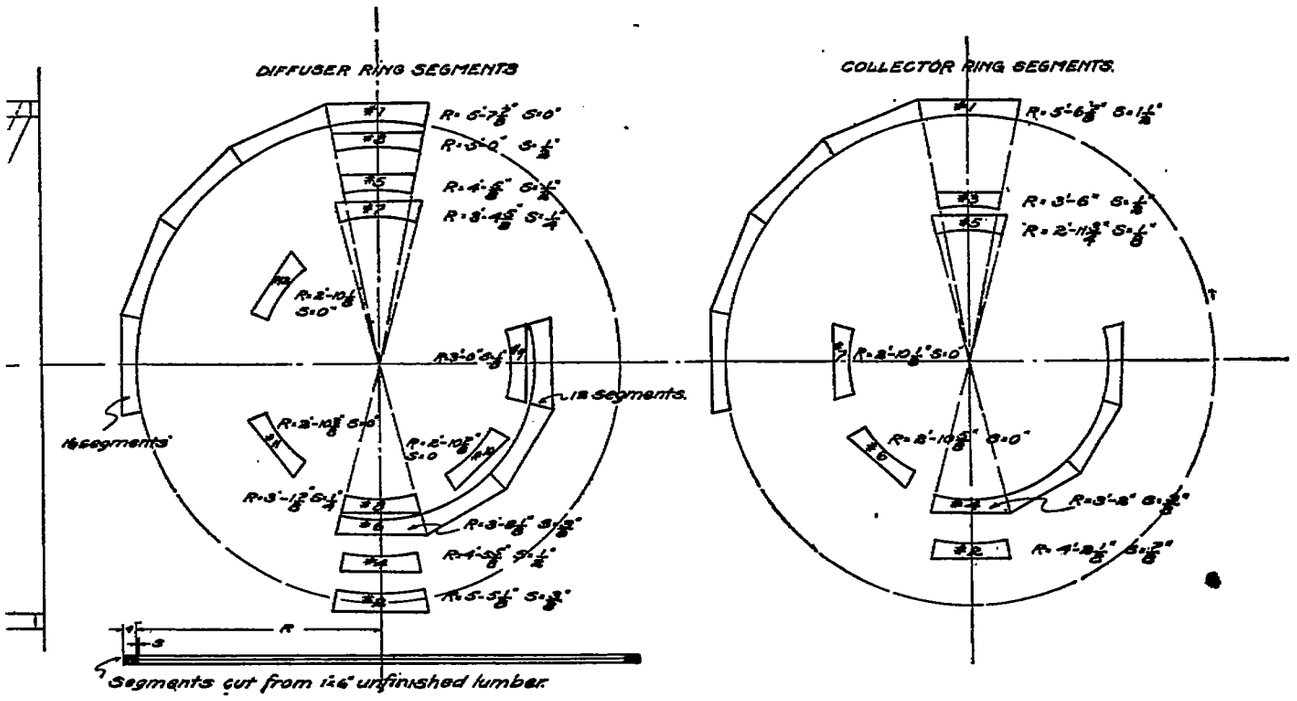
DIFFUSER RING SEGMENTS
COLLECTOR RING SEGMENTS.
16 segments
18 segments.
Segments cut from 1"x6" unfinished lumber.

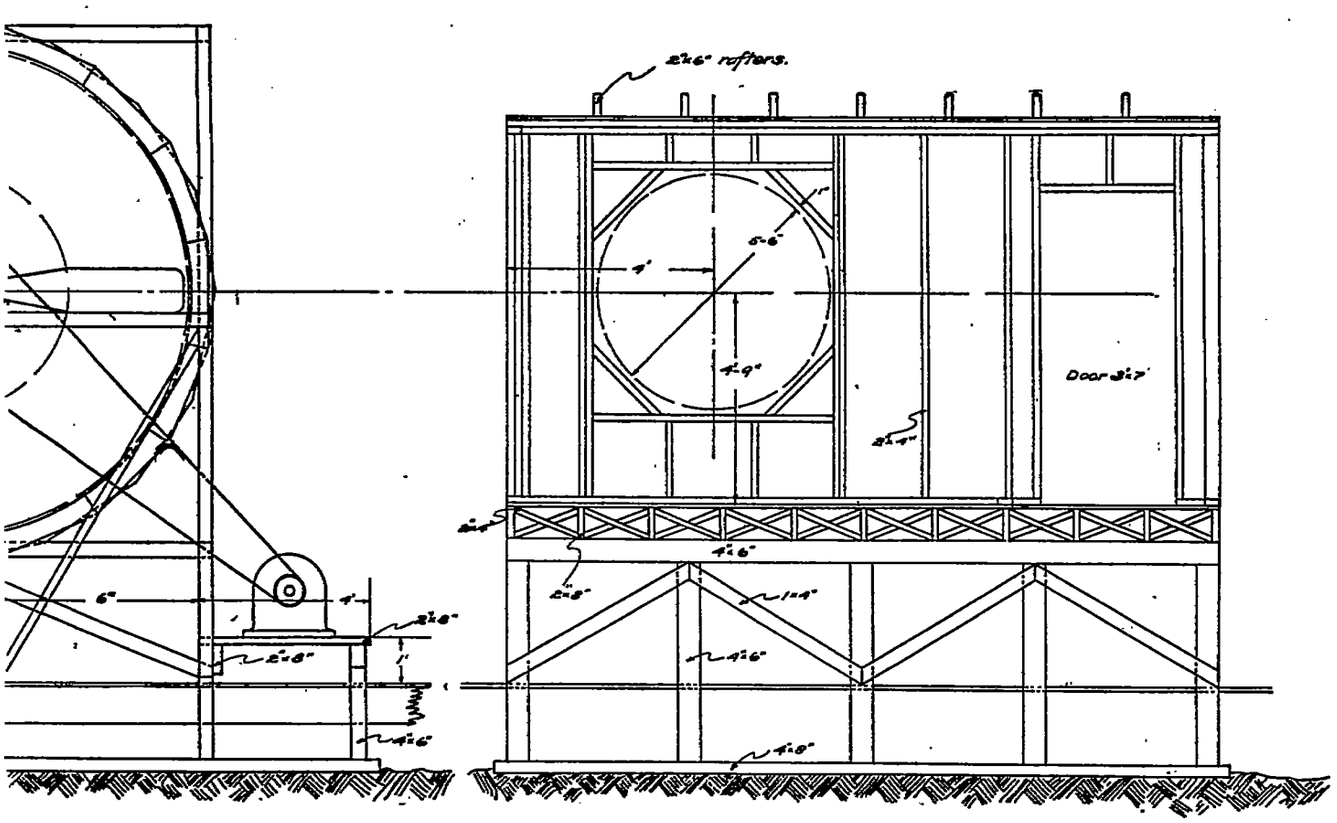
2"x6" rafters.
Door 3'-7"

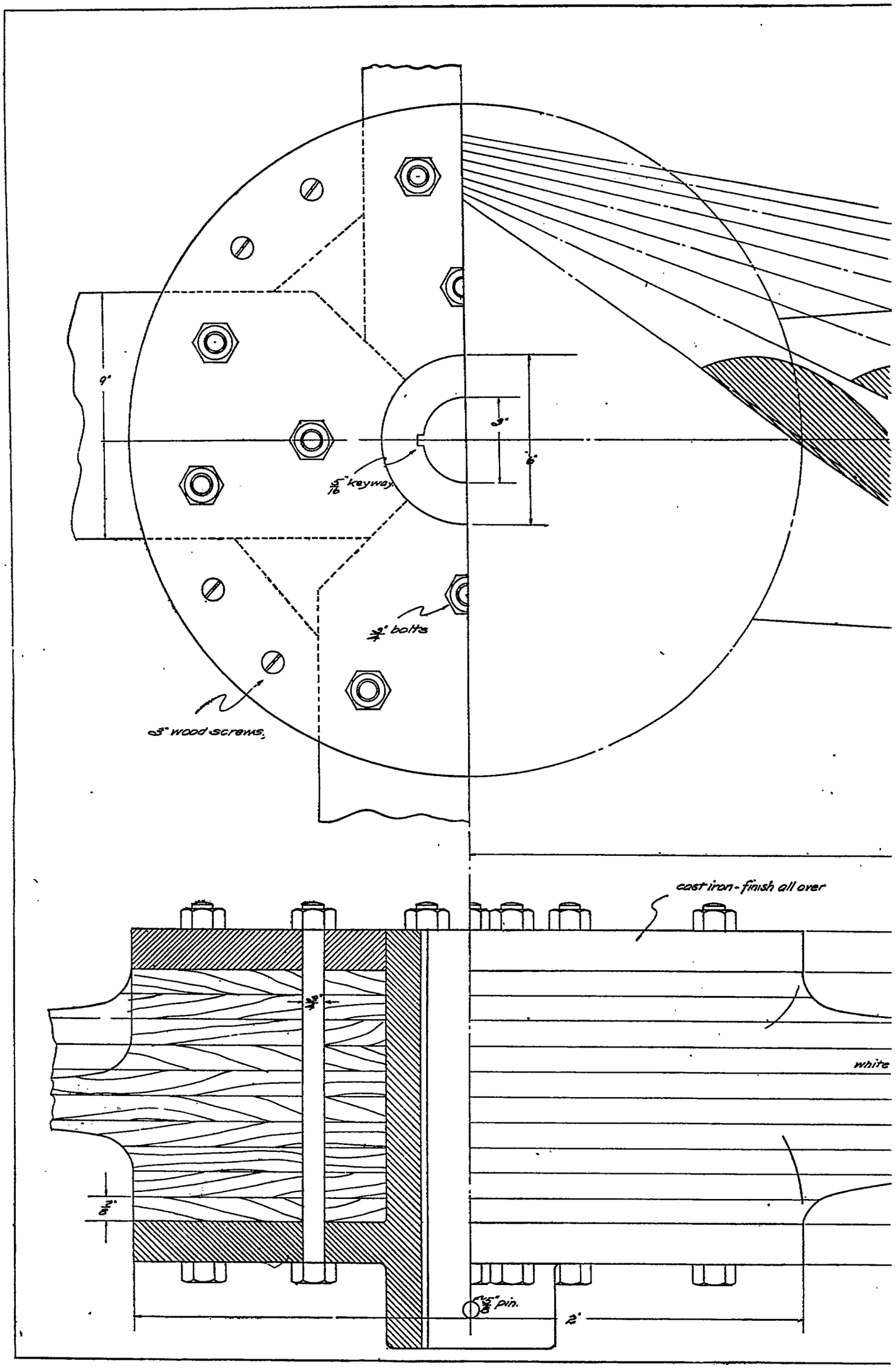
9"
3"
6"
5/16" keyway
3/4" bolts
3" wood screws.
cast iron - finish all over
3/4"
white
3/8"
5/8" pin.
2"

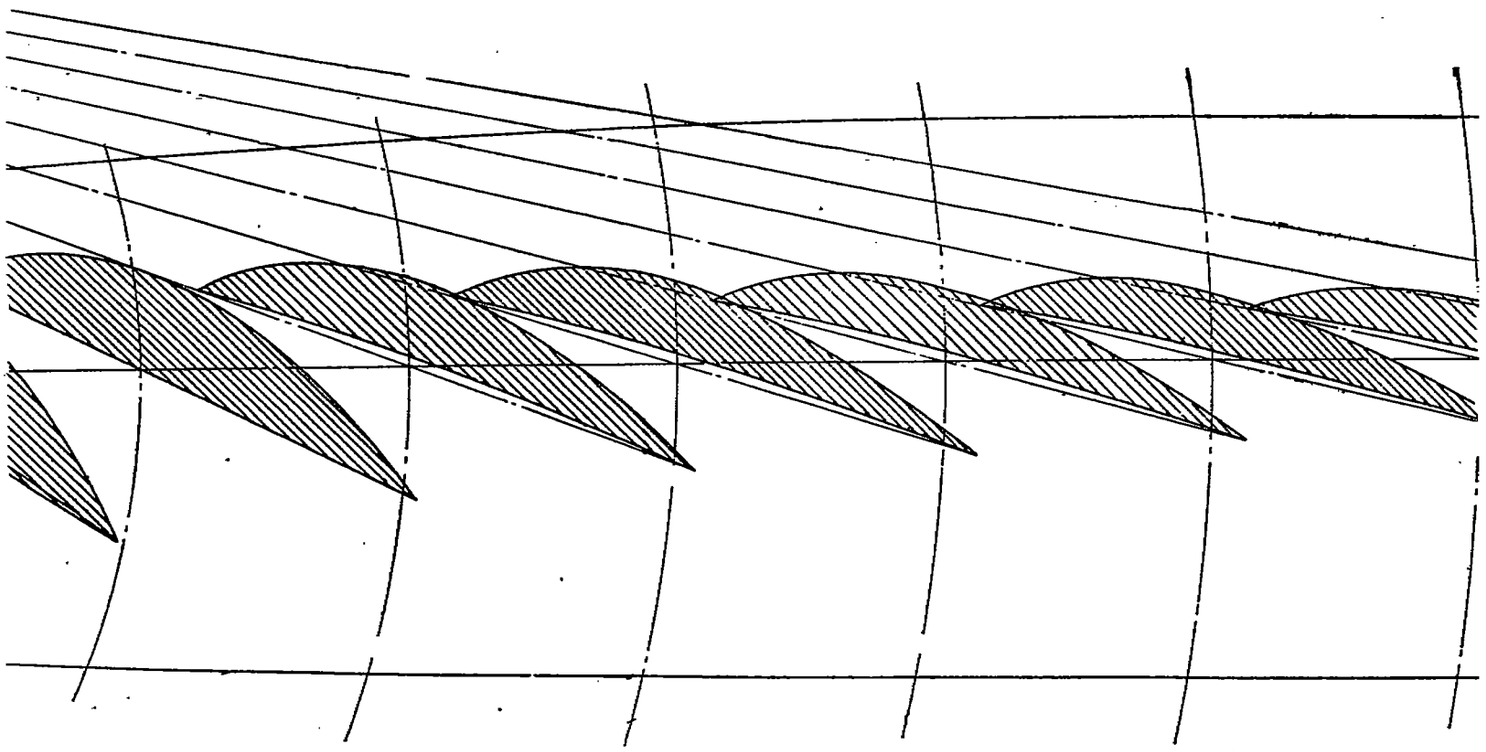

5'-6"

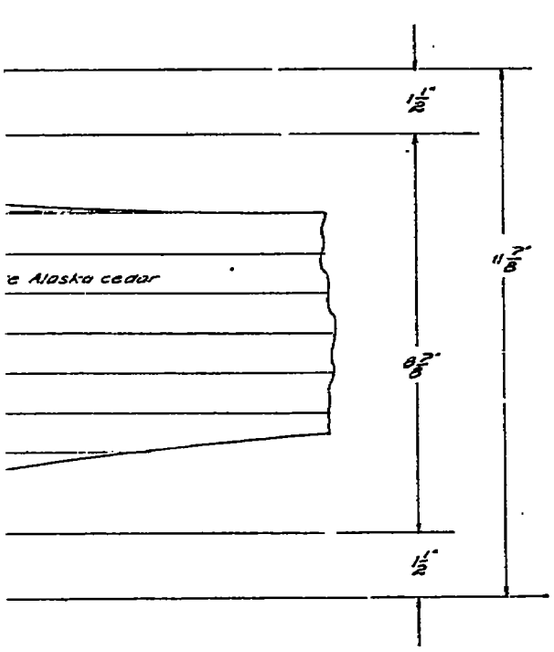

(1b)

AERODYNAMICAL LABORATORY
STANFORD UNIVERSITY, CAL.
FAN DETAILS
SCALE ½"=1" MARCH 1/12.

PLATE III.

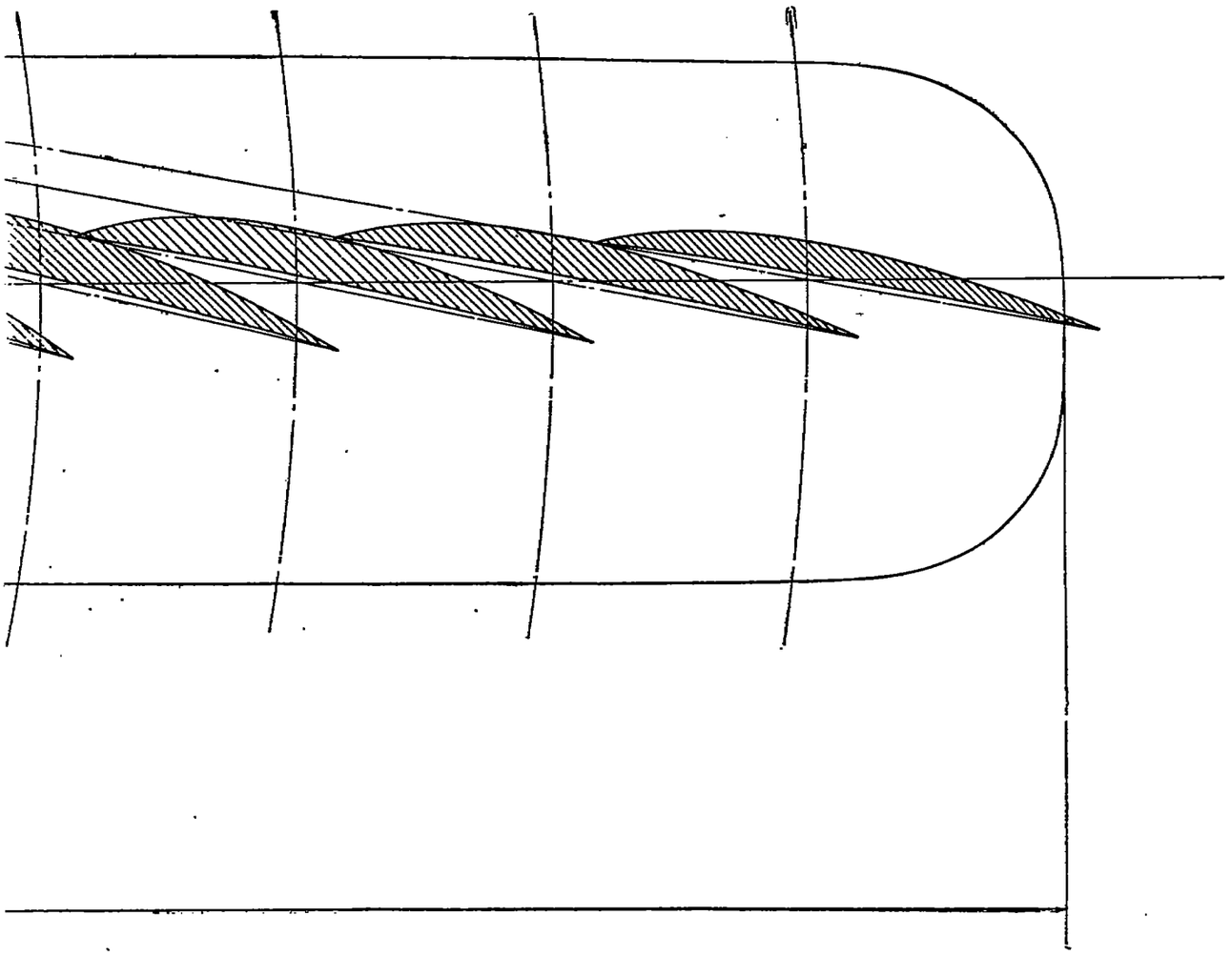

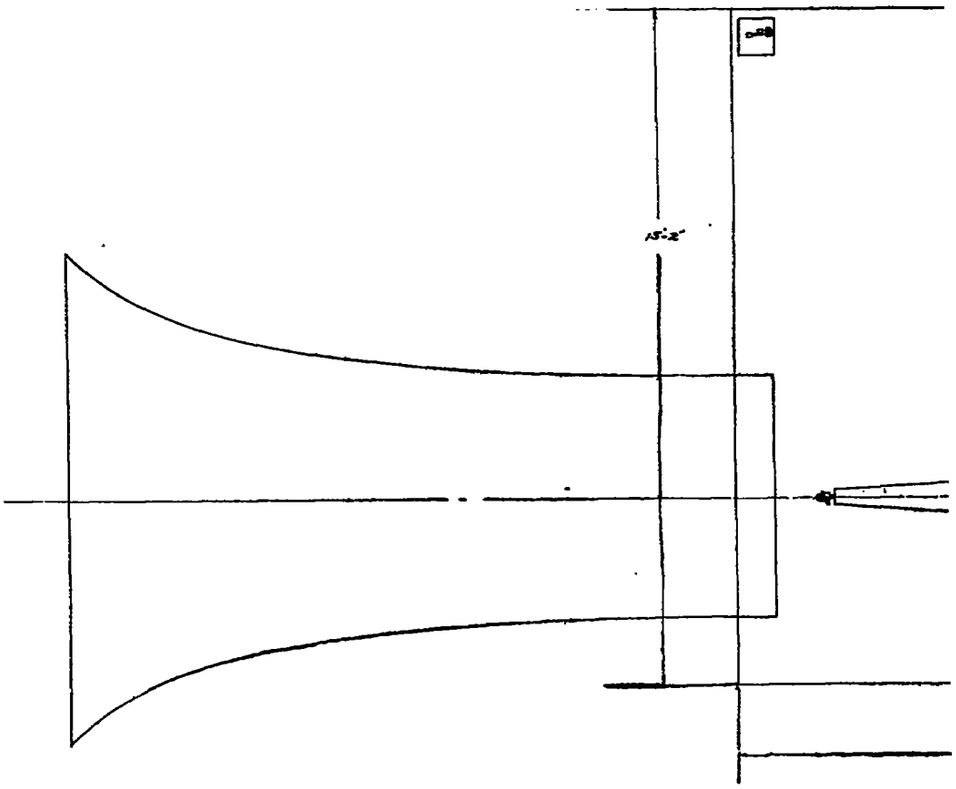
15'-2"

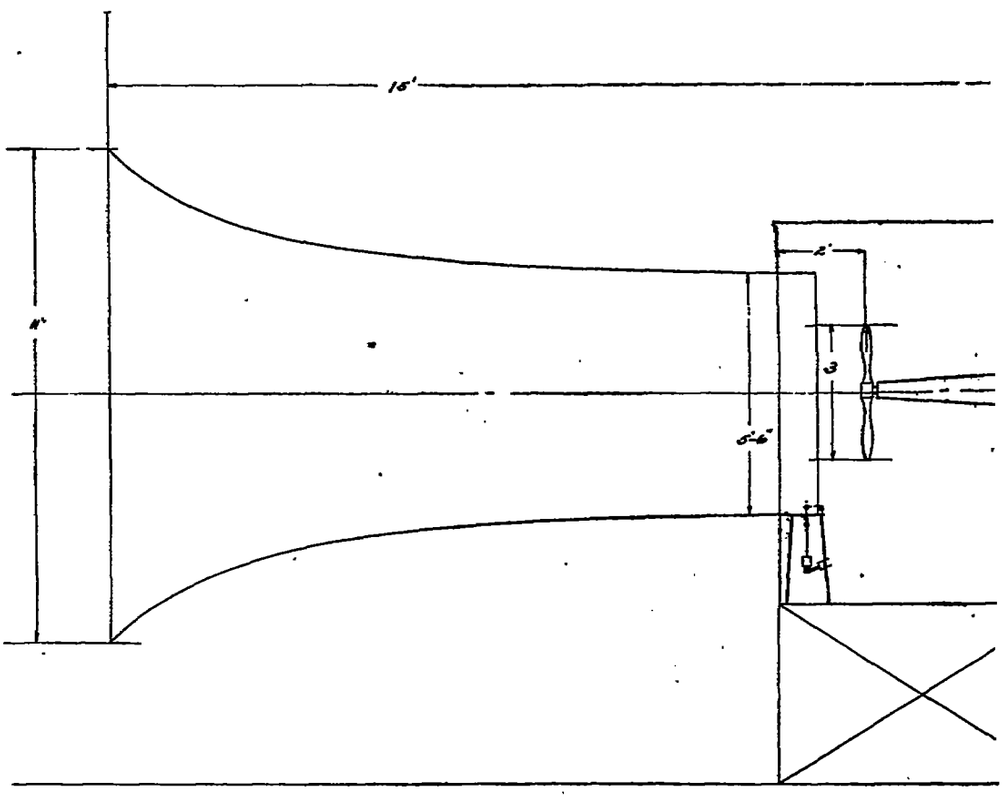
15'
11'
2'
3
5'-6"

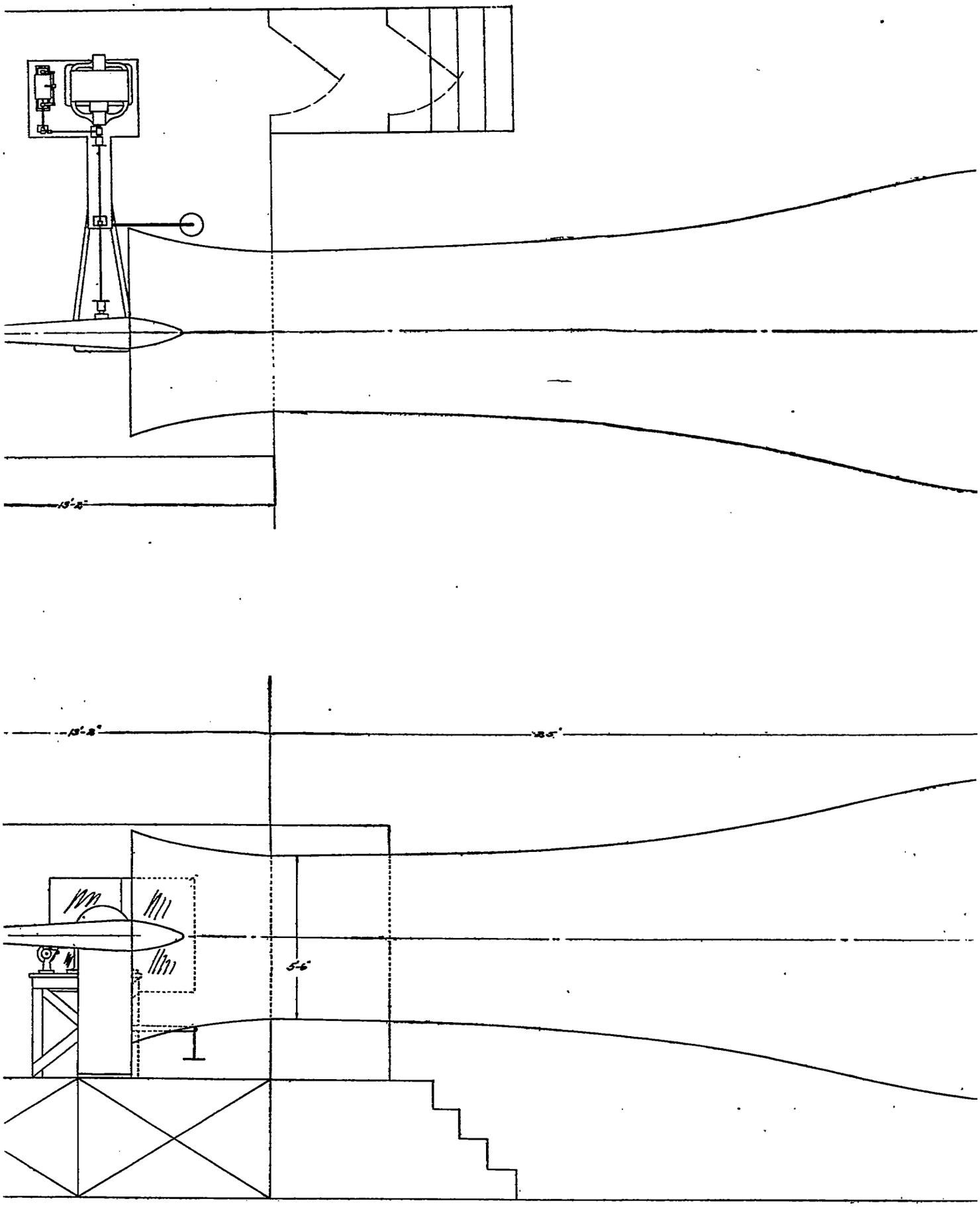

1

AERODYNAMICAL LABORATORY
STANFORD UNIVERSITY, CAL.
GENERAL ARRANGEMENT.
MARCH 1917.

PLATE IV.

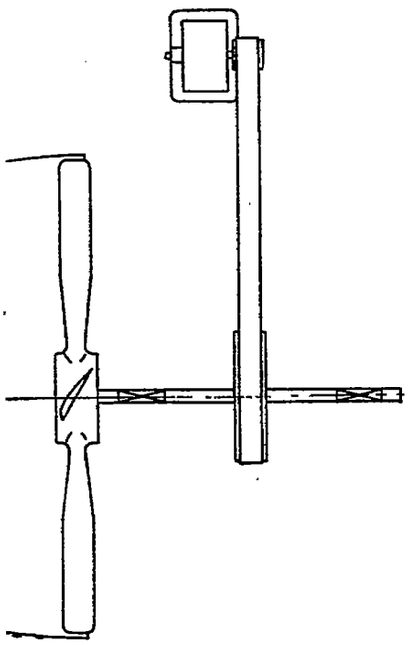

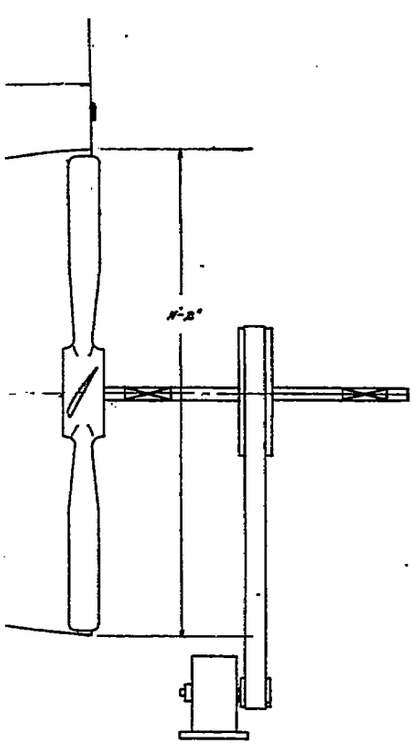
14'-2"

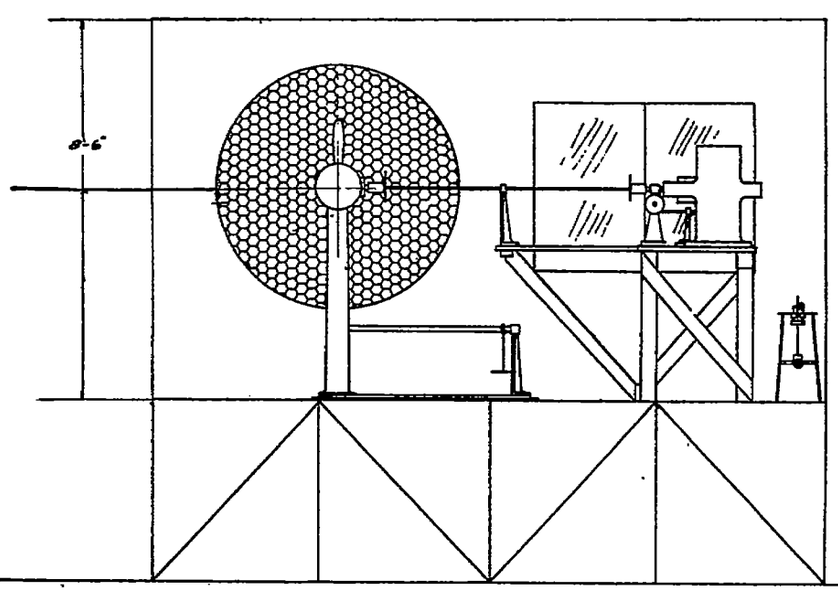
8'-6"

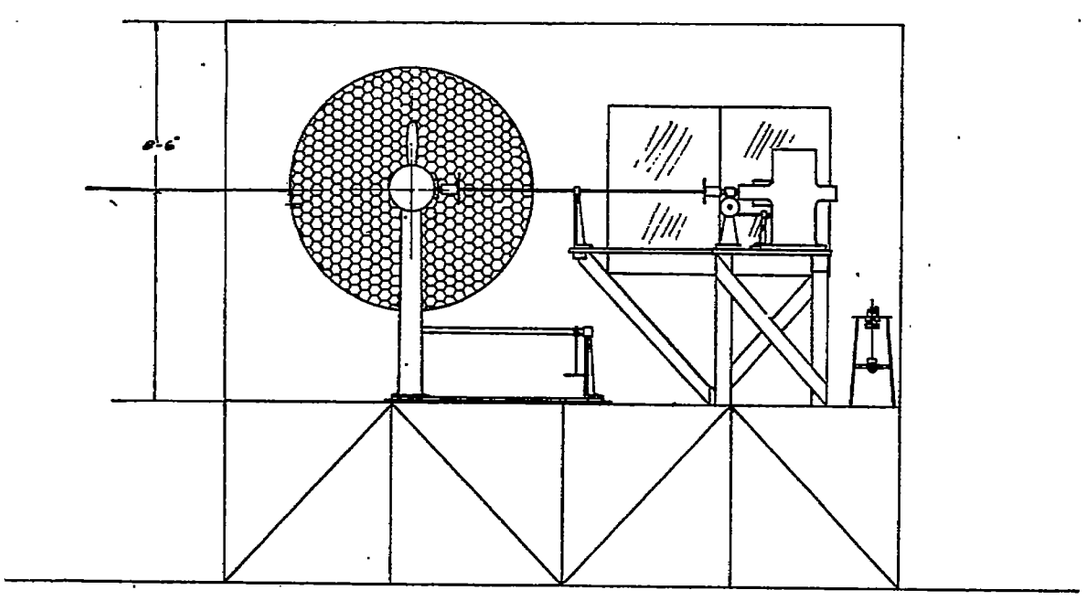

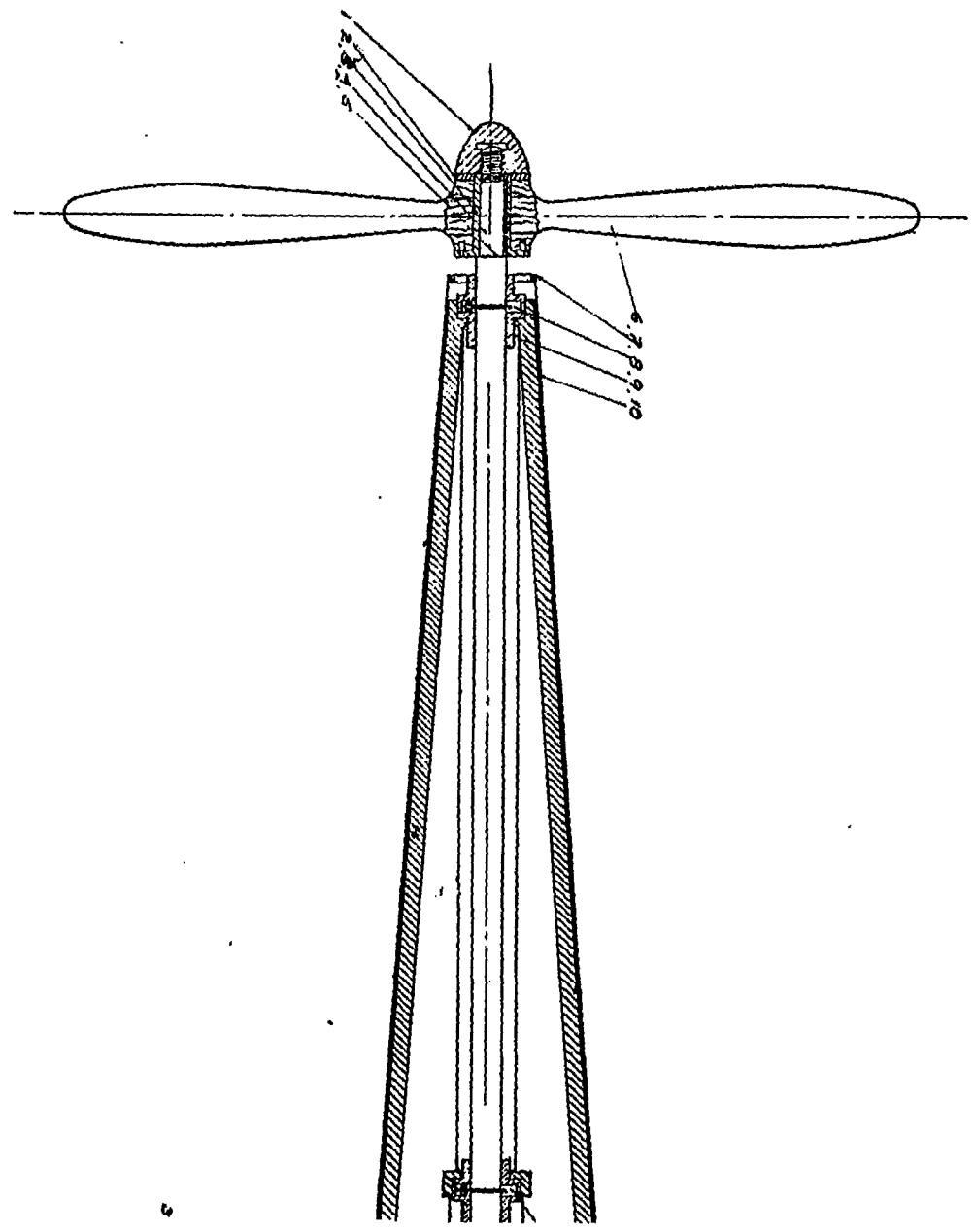
1
2
3
4
5
6
7
8
9
10

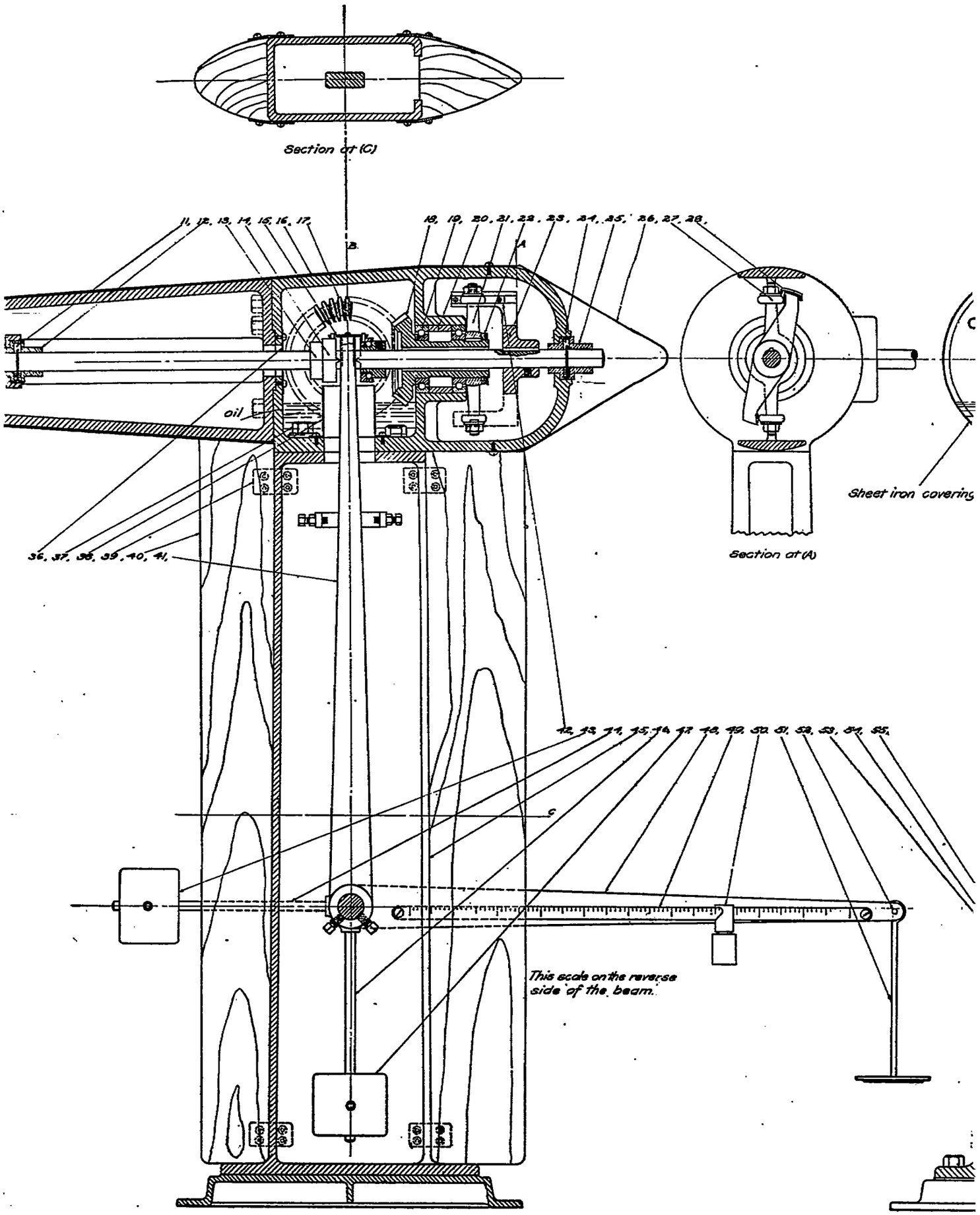

(2)

AERODYNAMICAL LABORATORY
STANFORD UNIVERSITY, CAL.
THRUST DYNAMOMETER.
SCALE 1/4" = 1" MARCH 1/7.

PLATE V.

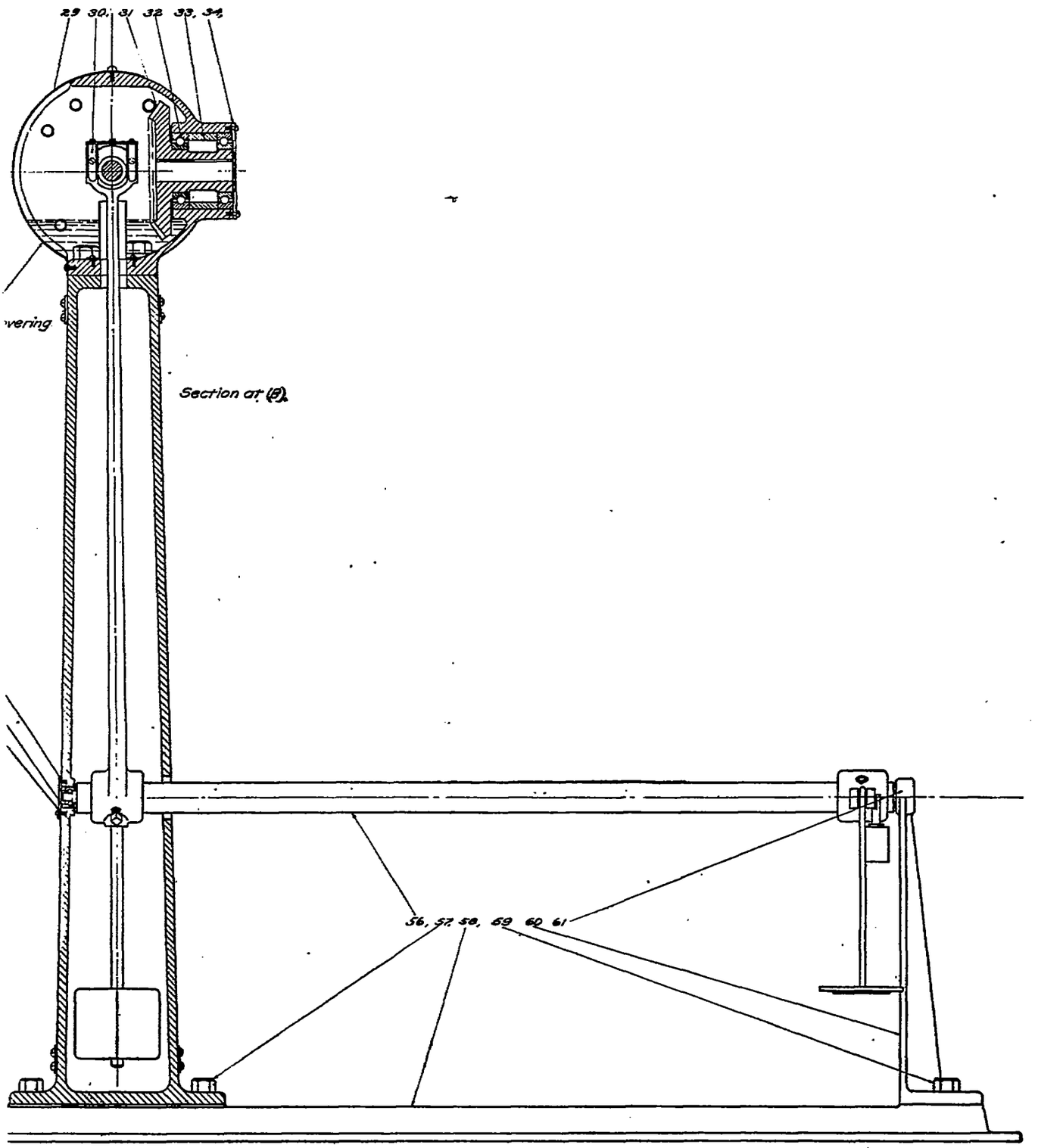
29 30, 31 32 33, 34,
vering.
Section at (B).
56, 57 58, 59 60 61

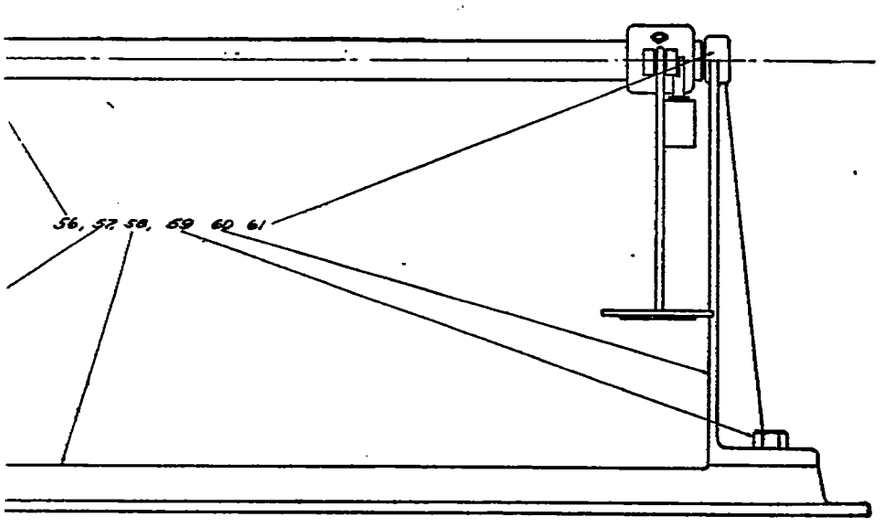
56, 57 58, 59 60 61

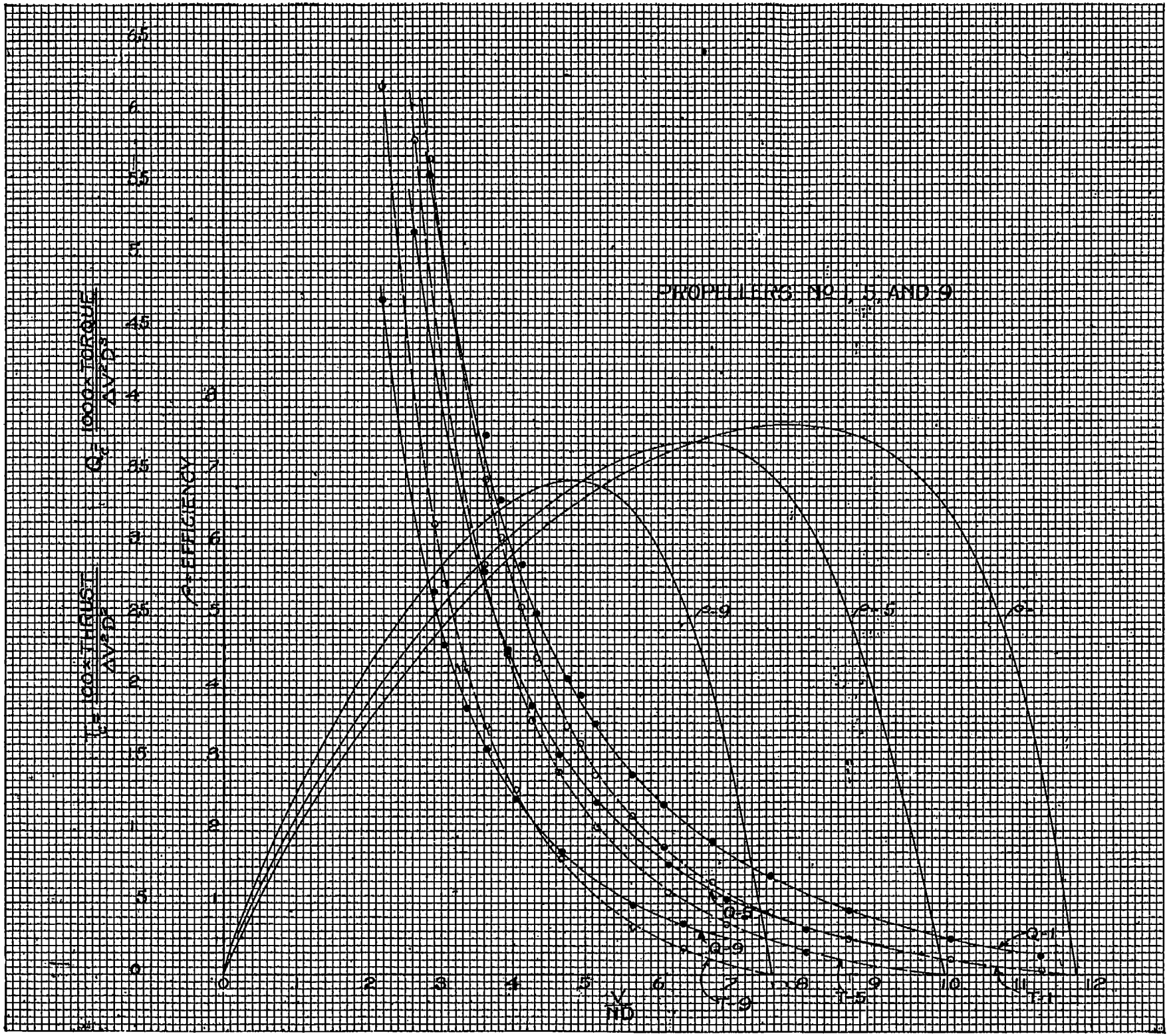
PROPELLERS No. 1, 5, AND 9.
$C_T = \frac{100 \times THRUST}{\Delta V^2 D^2}$
$C_Q = \frac{1000 \times TORQUE}{\Delta V^2 D^3}$
η - EFFICIENCY
$\frac{V}{ND}$
Q-1
Q-5
Q-9
T-1
T-5
T-9
0
.5
1
1.5
2
2.5
3
3.5
4
4.5
5
5.5
6
6.5
7
8
9
10
11
12

PLATE VI.

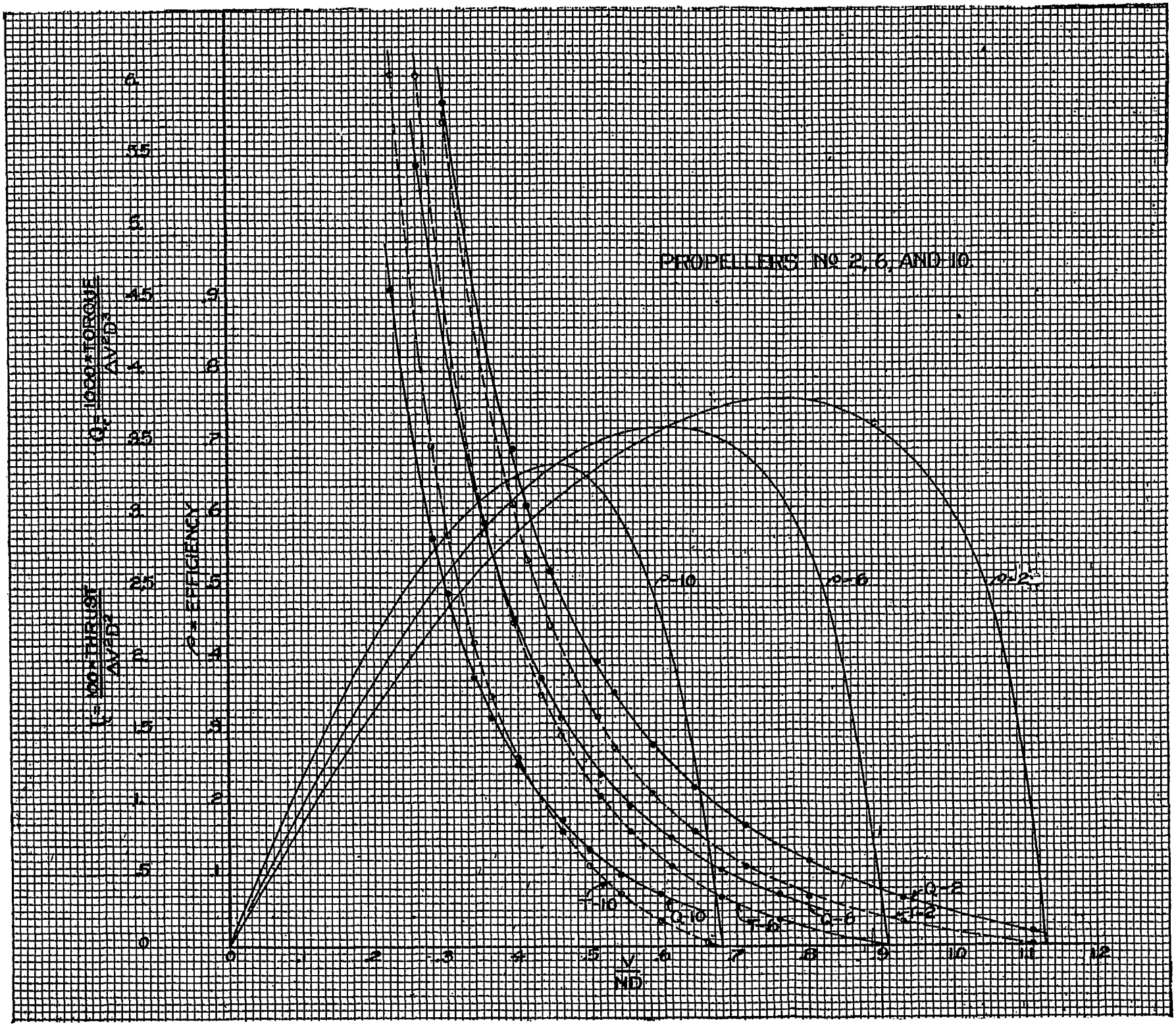
PROPELLERS Nº 2, 6, AND 10
$C_T = \frac{100 \times THRUST}{\Delta V^2 D^2}$
$C_Q = \frac{1000 \times TORQUE}{\Delta V^2 D^3}$
η = EFFICIENCY
$\frac{V}{ND}$
T-10
Q-10
T-6
Q-6
T-2
Q-2
0
.1
.2
.3
.4
.5
.6
.7
.8
.9
1.0
1.1
1.2
.5
1.
1.5
2.
2.5
3.
3.5
4.
4.5
5.
5.5
6.

PLATE VII.

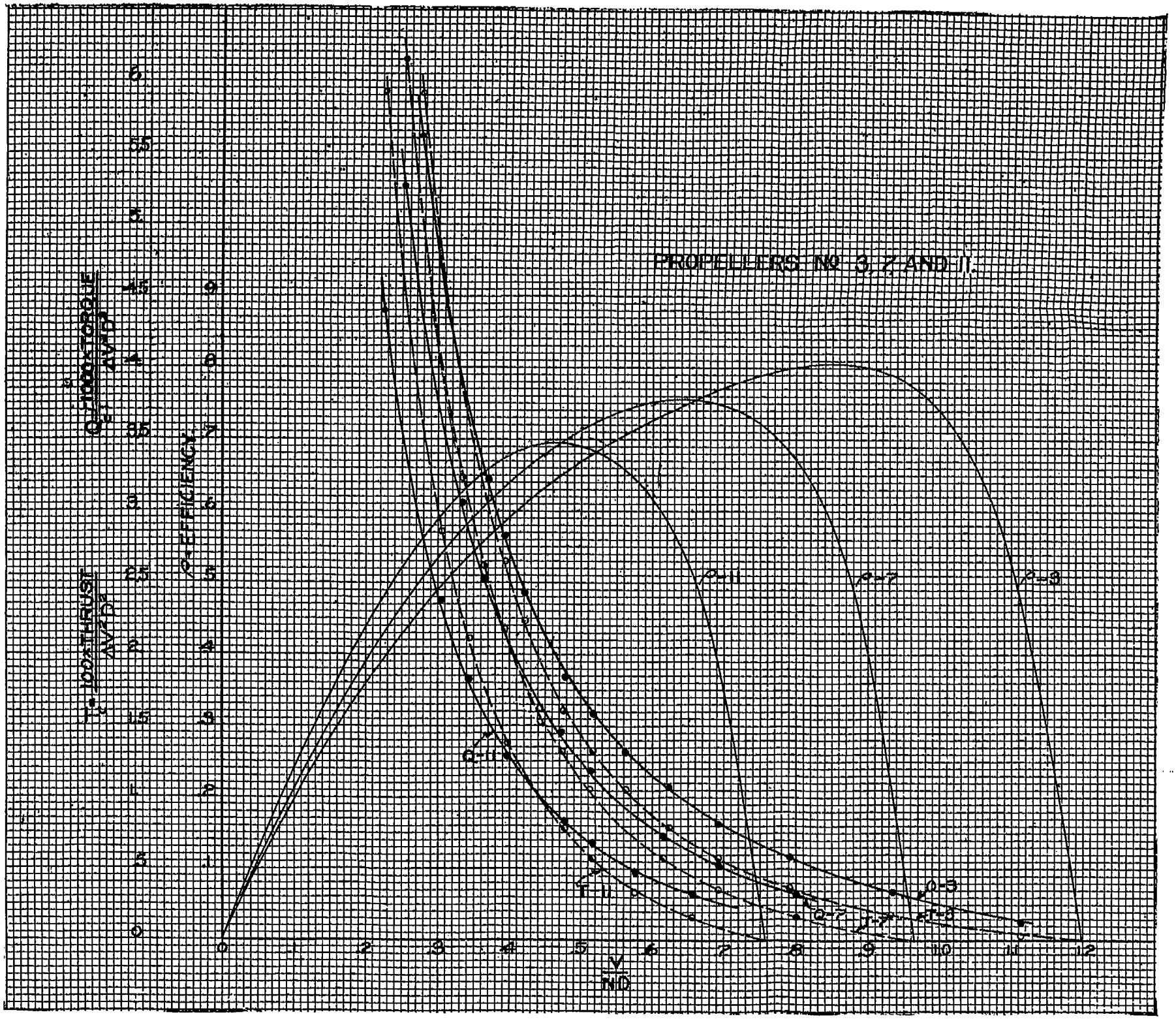
PROPELLERS Nº 3, 7 AND 11.
$T_c = \frac{100 \times THRUST}{AV^2D^2}$
$Q_c = \frac{1000 \times TORQUE}{AV^2D^3}$
η - EFFICIENCY
$\frac{V}{ND}$
η-11
η-7
η-3
Q-11
Q-7
Q-3
T-11
T-7
T-3

PLATE VIII.

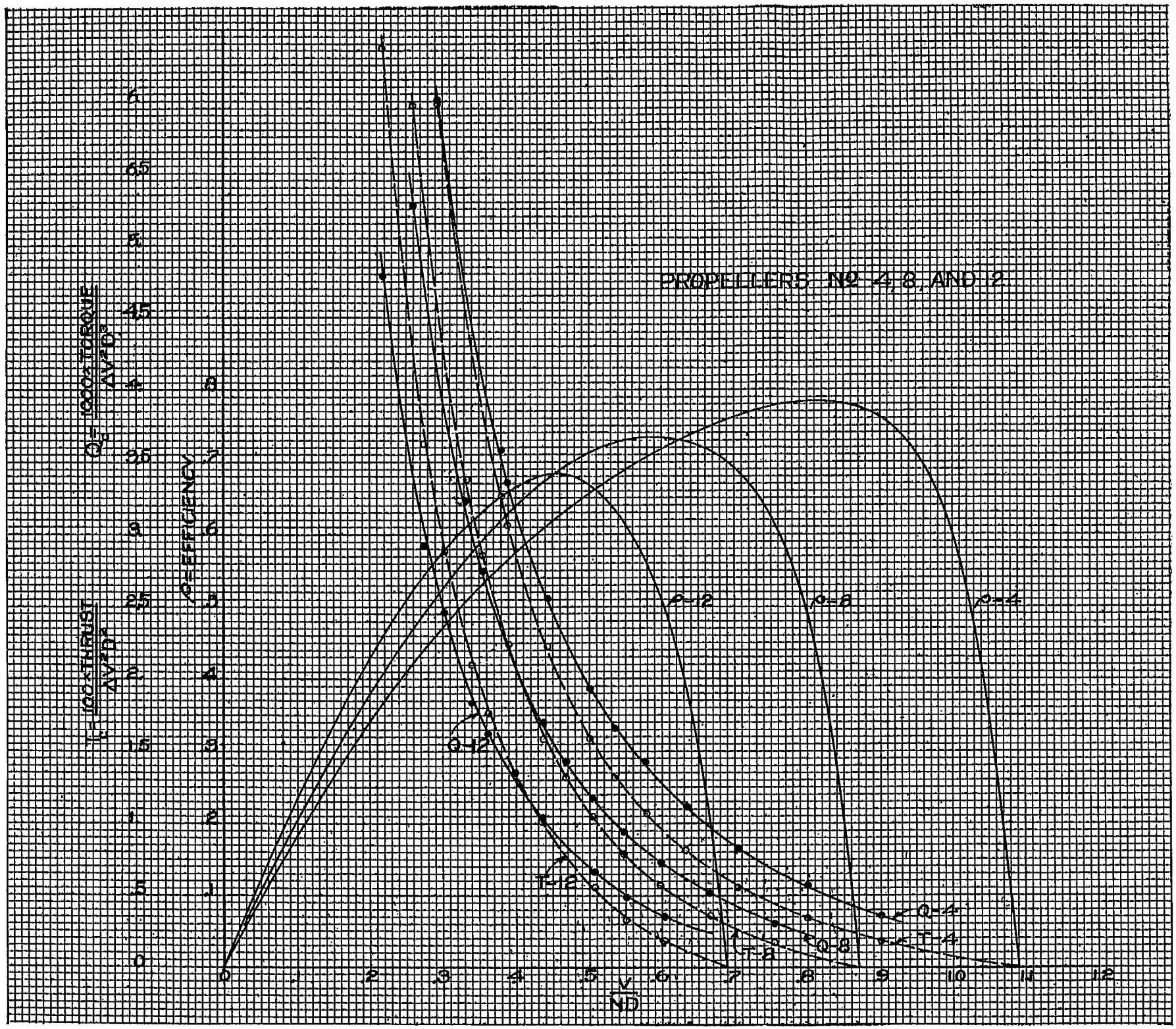
PROPELLERS No 4, 8, AND 12.
Q = 100 × TORQUE / ρV²D³
T = 100 × THRUST / ρV²D²
e = EFFICIENCY
V / ND
ρ-12
ρ-8
ρ-4
Q-12
T-12
Q-4
T-4
Q-8
T-8
0
.5
1
1.5
2
2.5
3
3.5
4
4.5
5
5.5
6
.1
.2
.3
.4
.5
.6
.7
.8
.9
1
1.1
1.2

PLATE IX.

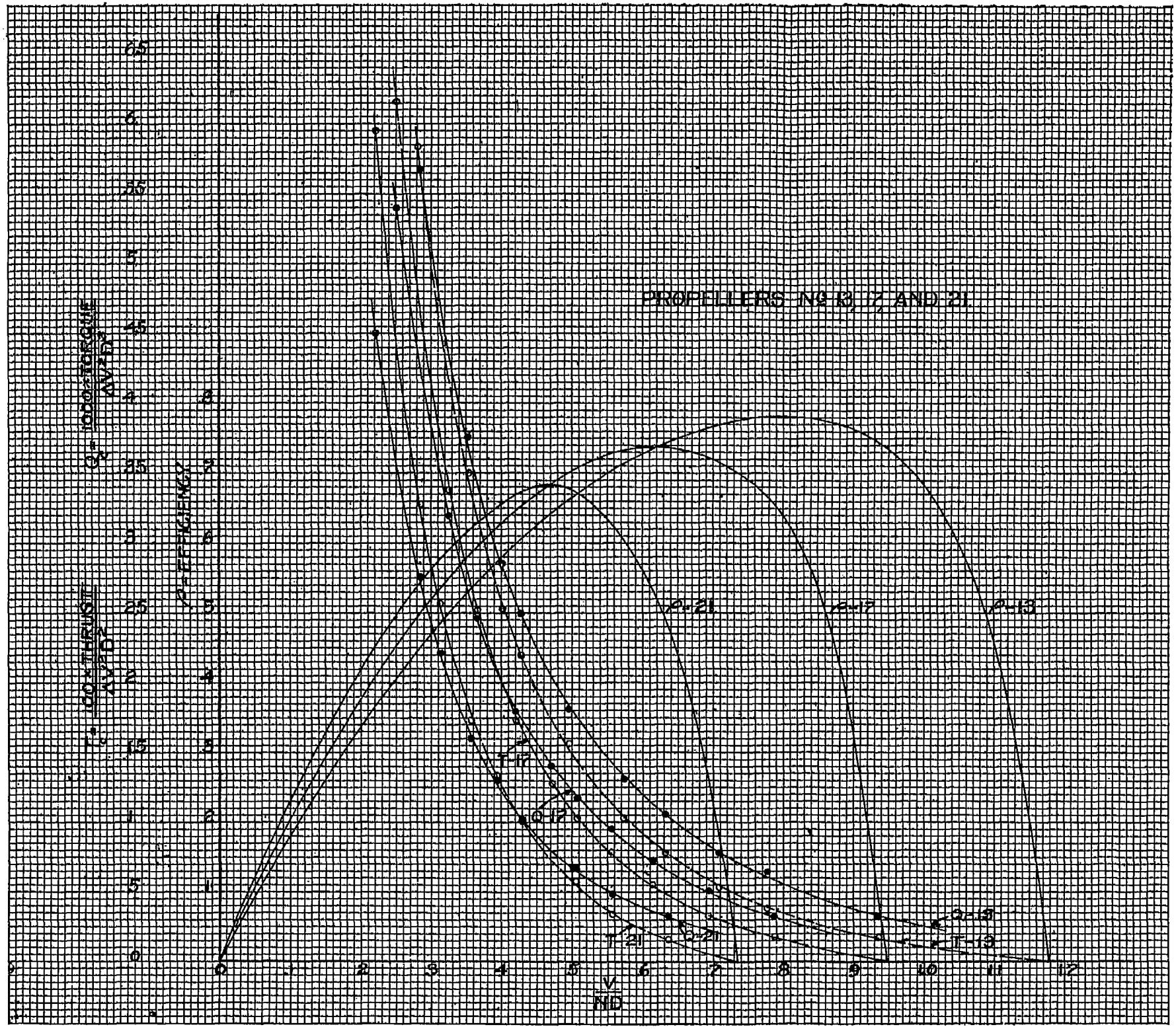
PROPELLERS Nº 13, 17 AND 21.
$C_Q = \frac{100 \times TORQUE}{\rho V^2 D^3}$
$C_T = \frac{100 \times THRUST}{\rho V^2 D^2}$
η = EFFICIENCY
$\frac{V}{ND}$
Q-21
Q-17
Q-13
T-17
Q-17
T-21
Q-21
Q-13
T-13

PLATE X.

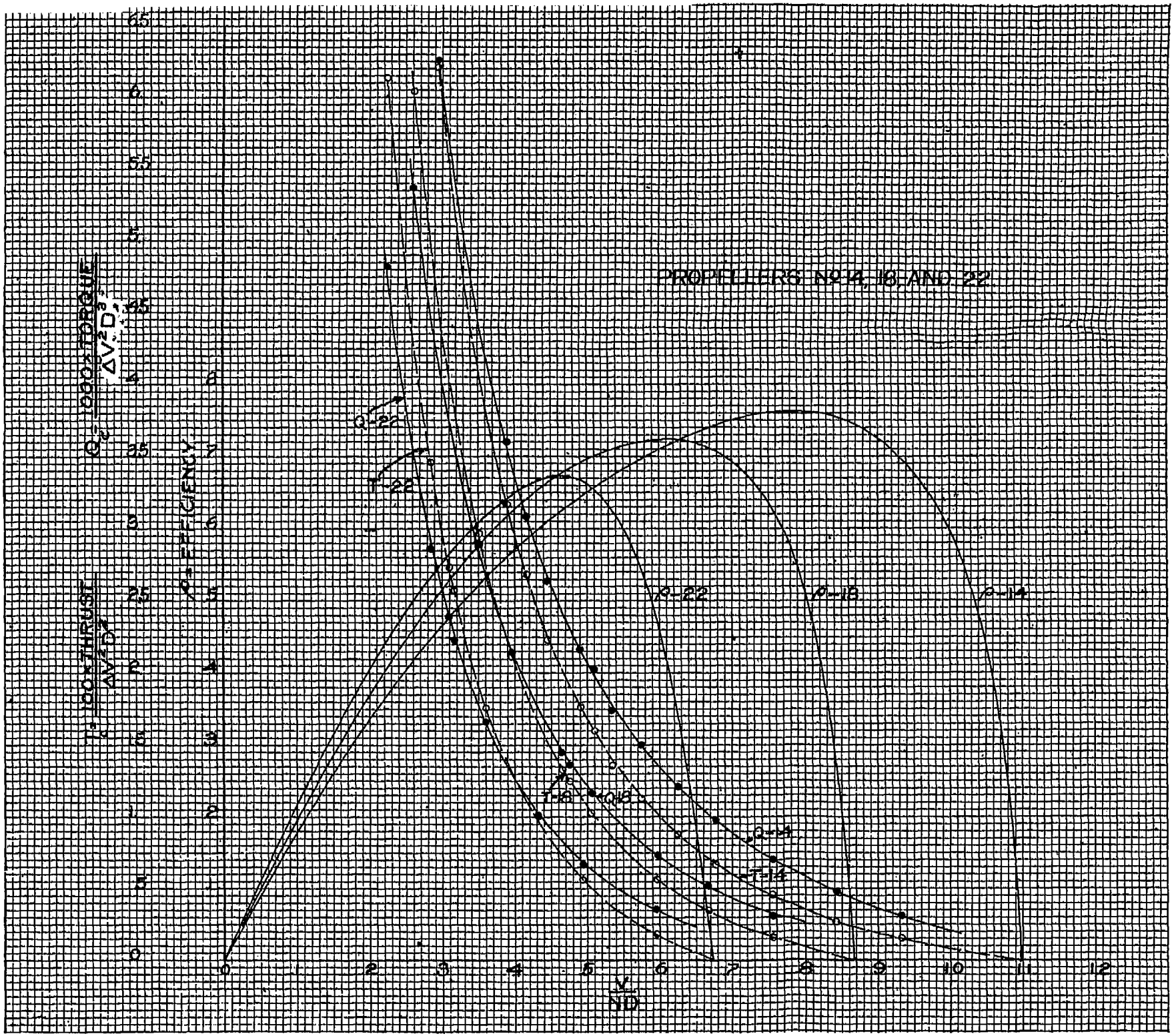
PROPELLERS No 14, 18, AND 22
$Q_c = \frac{1000 \times TORQUE}{\Delta V^2 D^3}$
$T_c = \frac{100 \times THRUST}{\Delta V^2 D^2}$
EFFICIENCY
$\frac{V}{ND}$
Q-22
T-22
Q-18
T-18
Q-14
T-14
0
1
2
3
4
5
6
7
8
9
10
11
12
.5
1.5
2.5
3.5
4.5
5.5
6.5

PLATE XI.

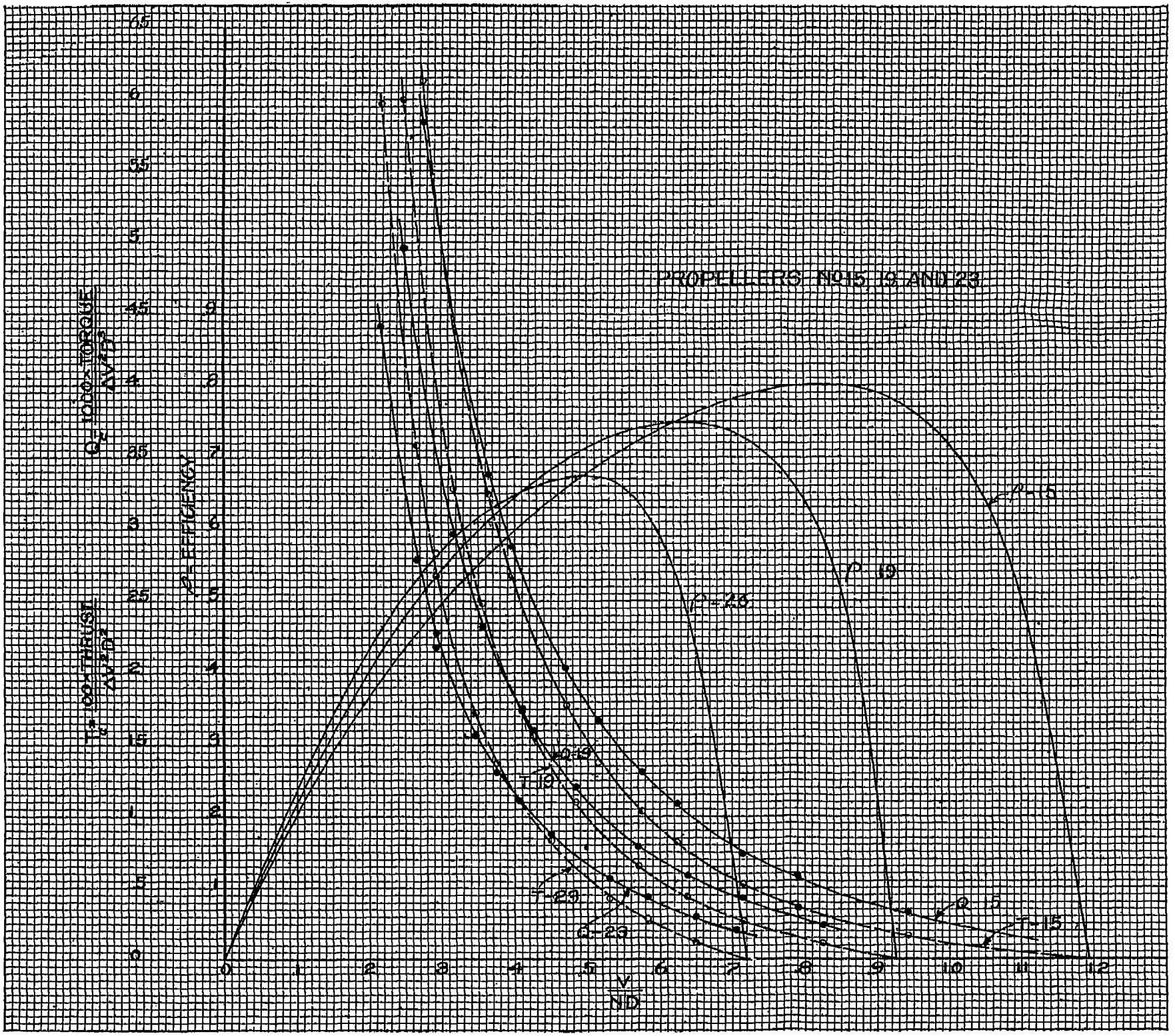
PROPELLERS Nº15, 19 AND 23.
$Q_c = \frac{100 \times \text{TORQUE}}{\Delta V^2 D^3}$
$T_c = \frac{100 \times \text{THRUST}}{\Delta V^2 D^2}$
ρ - EFFICIENCY
$\frac{V}{ND}$
P-15
P-19
P-23
Q-19
T-19
T-23
Q-23
Q-15
T-15

PLATE XII.

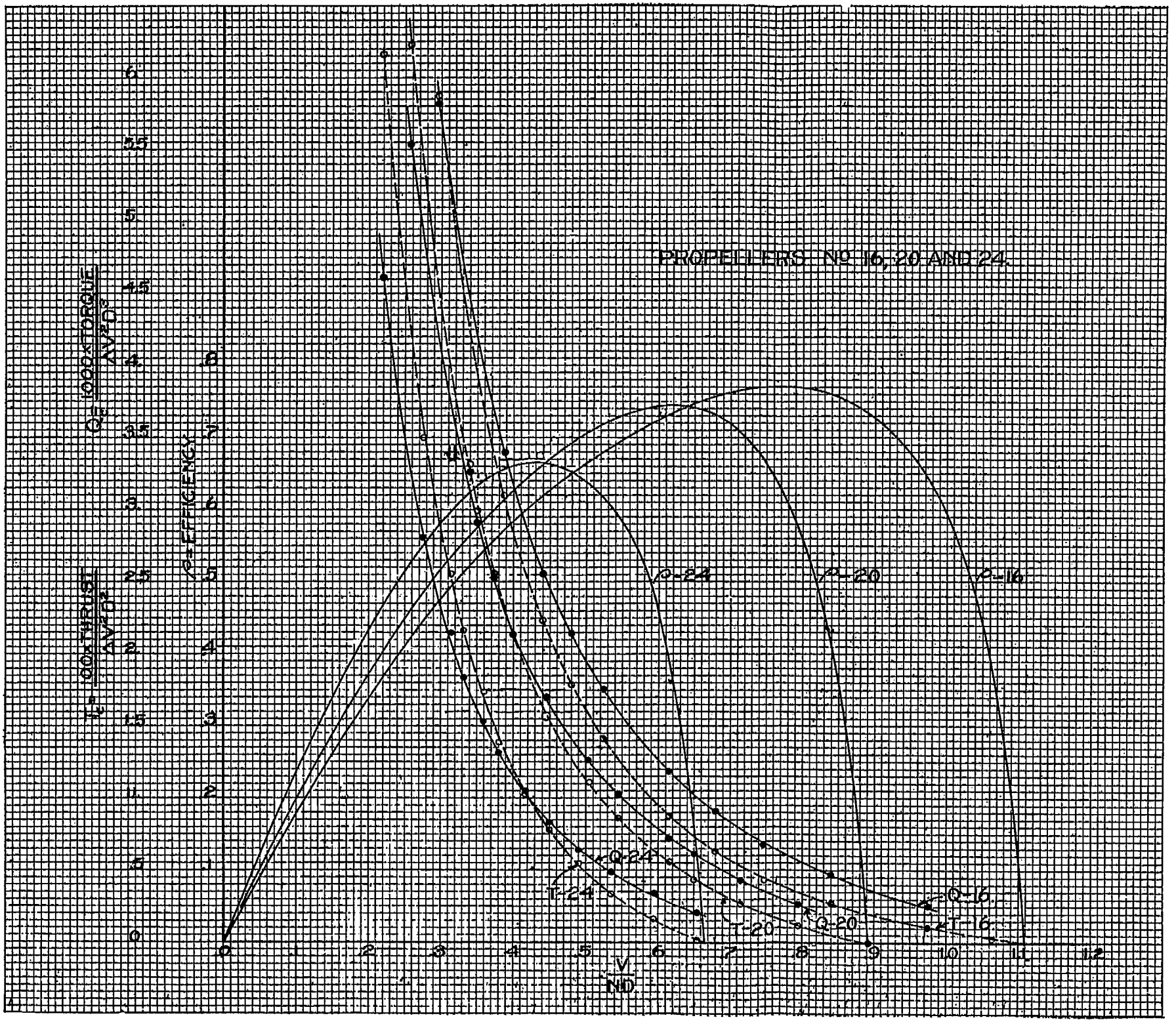
PROPELLERS. Nº 16, 20 AND 24.
$Q_c = \frac{1000 \times TORQUE}{\Delta V^2 D^3}$
$T_c = \frac{100 \times THRUST}{\Delta V^2 D^2}$
η = EFFICIENCY
$\frac{V}{ND}$
P-24
P-20
P-16
Q-24
T-24
Q-20
T-20
Q-16
T-16

PLATE XIII.

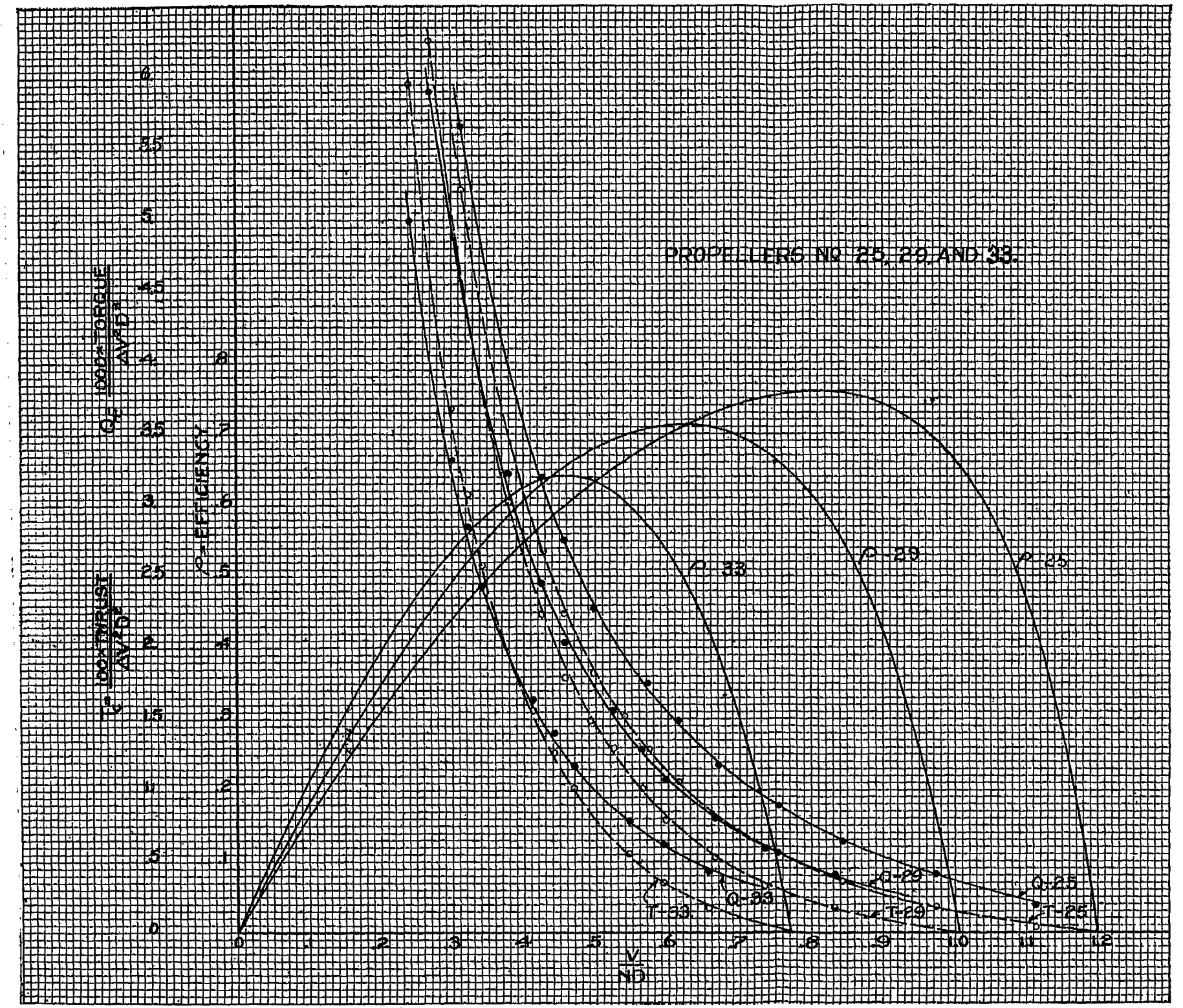
PROPELLERS Nº 25, 29 AND 33.
$\frac{100 \times TORQUE}{\rho V^2 D^3}$
$\frac{100 \times THRUST}{\rho V^2 D^2}$
ρ = EFFICIENCY
$\frac{V}{ND}$
ρ-33
ρ-29
ρ-25
Q-29
Q-25
Q-33
T-33
T-29
T-25

PLATE XIV.

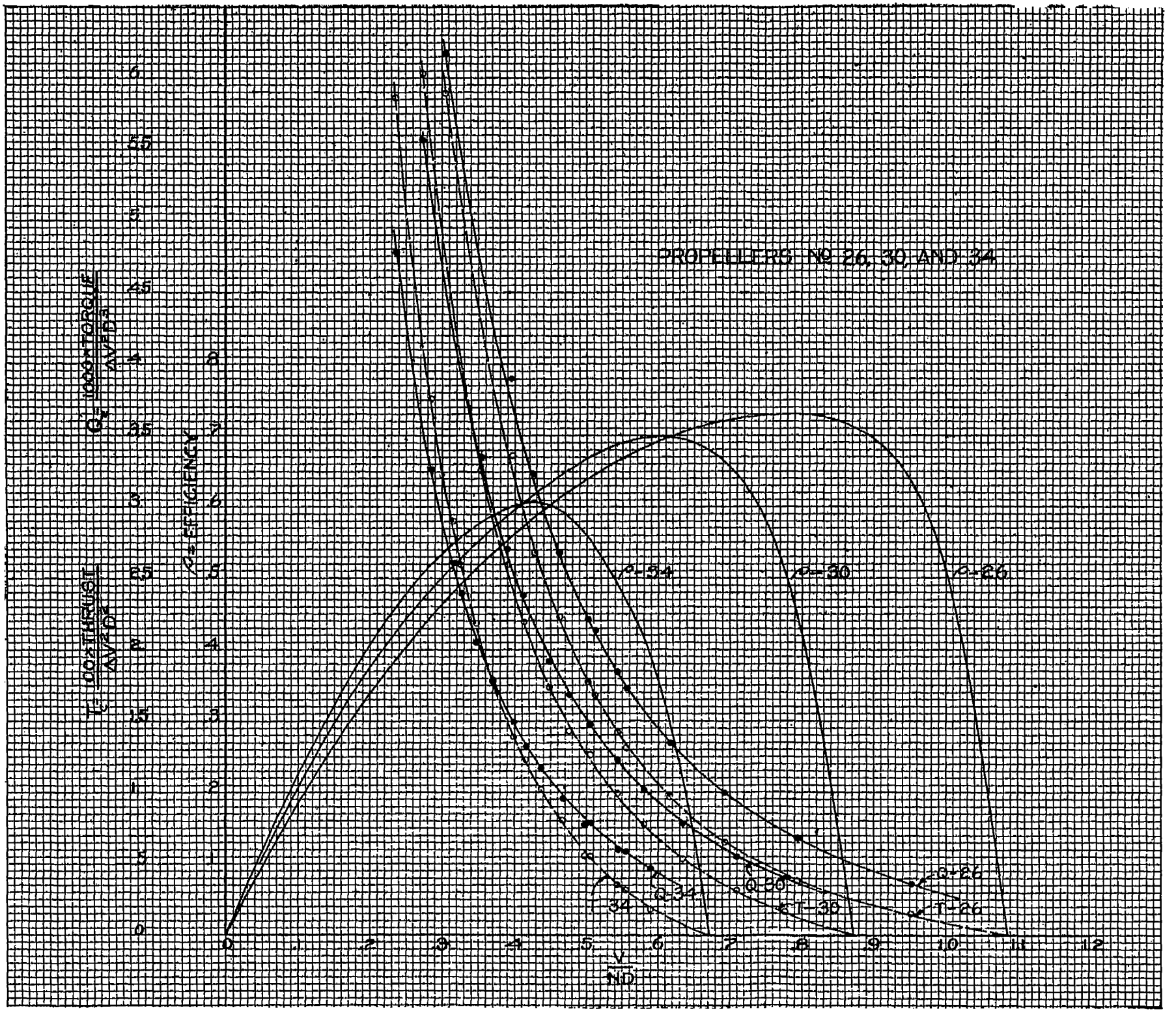
PROPELLERS № 26, 30, AND 34
$C_T = \frac{100 \times THRUST}{\rho V^2 D^2}$
$C_Q = \frac{1000 \times TORQUE}{\rho V^2 D^3}$
η = EFFICIENCY %
$\frac{V}{ND}$
C-34
C-30
C-26
Q-26
Q-30
Q-34
T-34
T-30
T-26

PLATE XV.

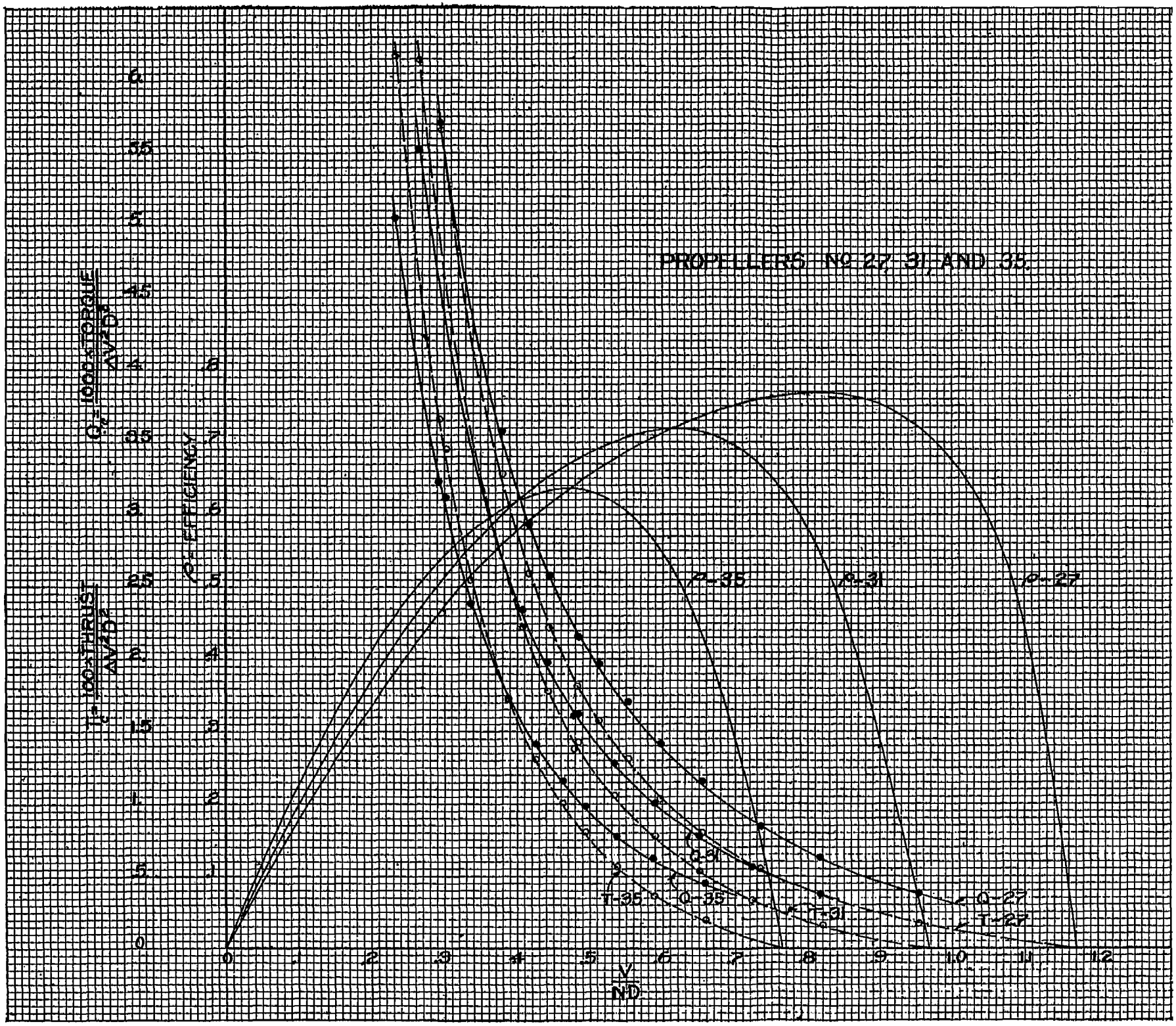
PROPELLERS Nº 27, 31, AND 35.
$Q_c = \frac{100 \times TORQUE}{\Delta V^2 D^3}$
$T_c = \frac{100 \times THRUST}{\Delta V^2 D^2}$
η - EFFICIENCY
$\frac{V}{ND}$
Q-35
Q-31
Q-27
T-35
Q-35
Q-31
T-31
Q-27
T-27

PLATE XVI.

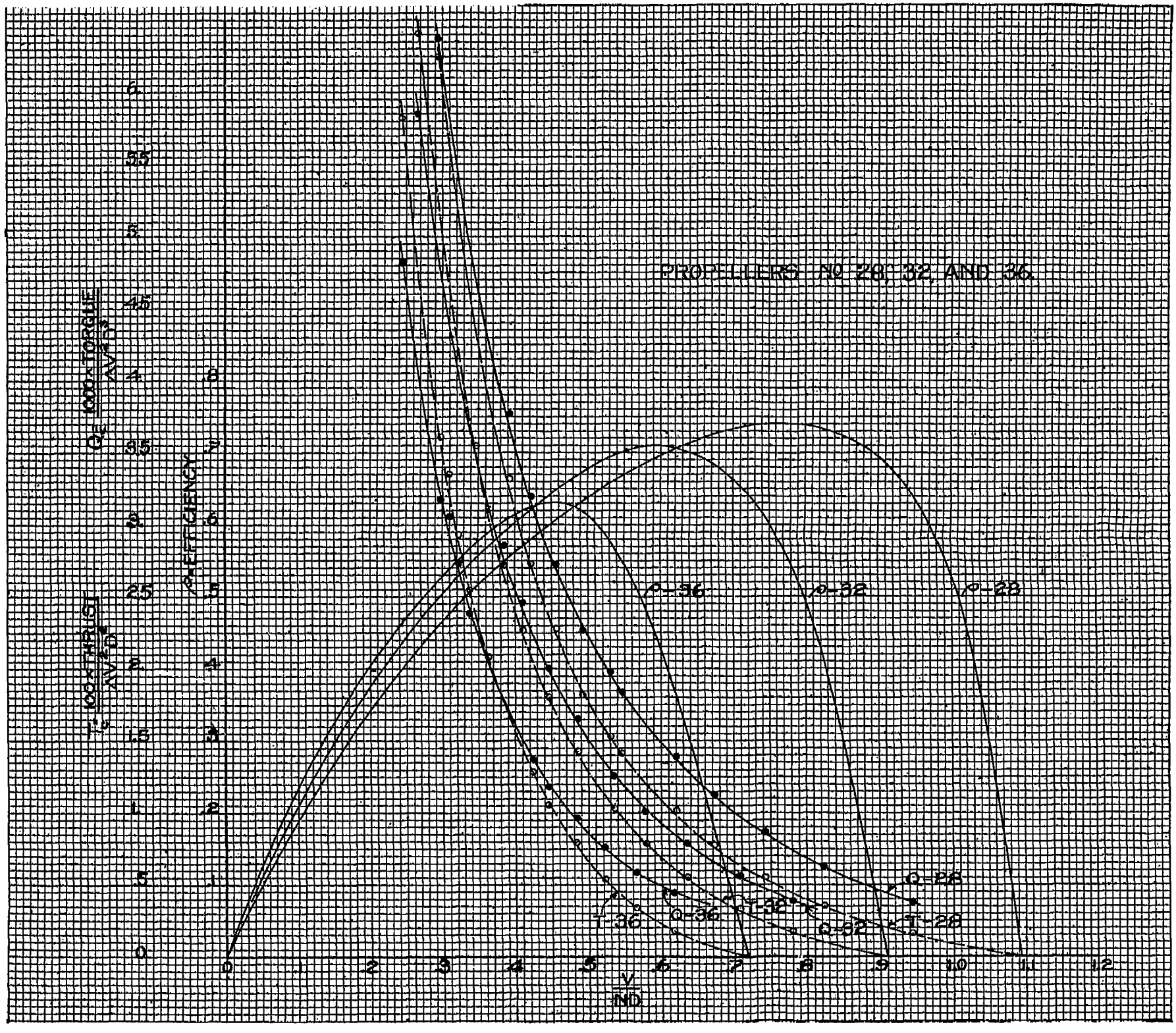
PROPELLERS № 28, 32, AND 36.
$\frac{100 \times \text{TORQUE}}{\rho V^2 D^3}$
$\frac{100 \times \text{THRUST}}{\rho V^2 D^2}$
η = EFFICIENCY
$\frac{V}{ND}$
Q-36
Q-32
Q-28
T-36
T-32
T-28

PLATE XVII.

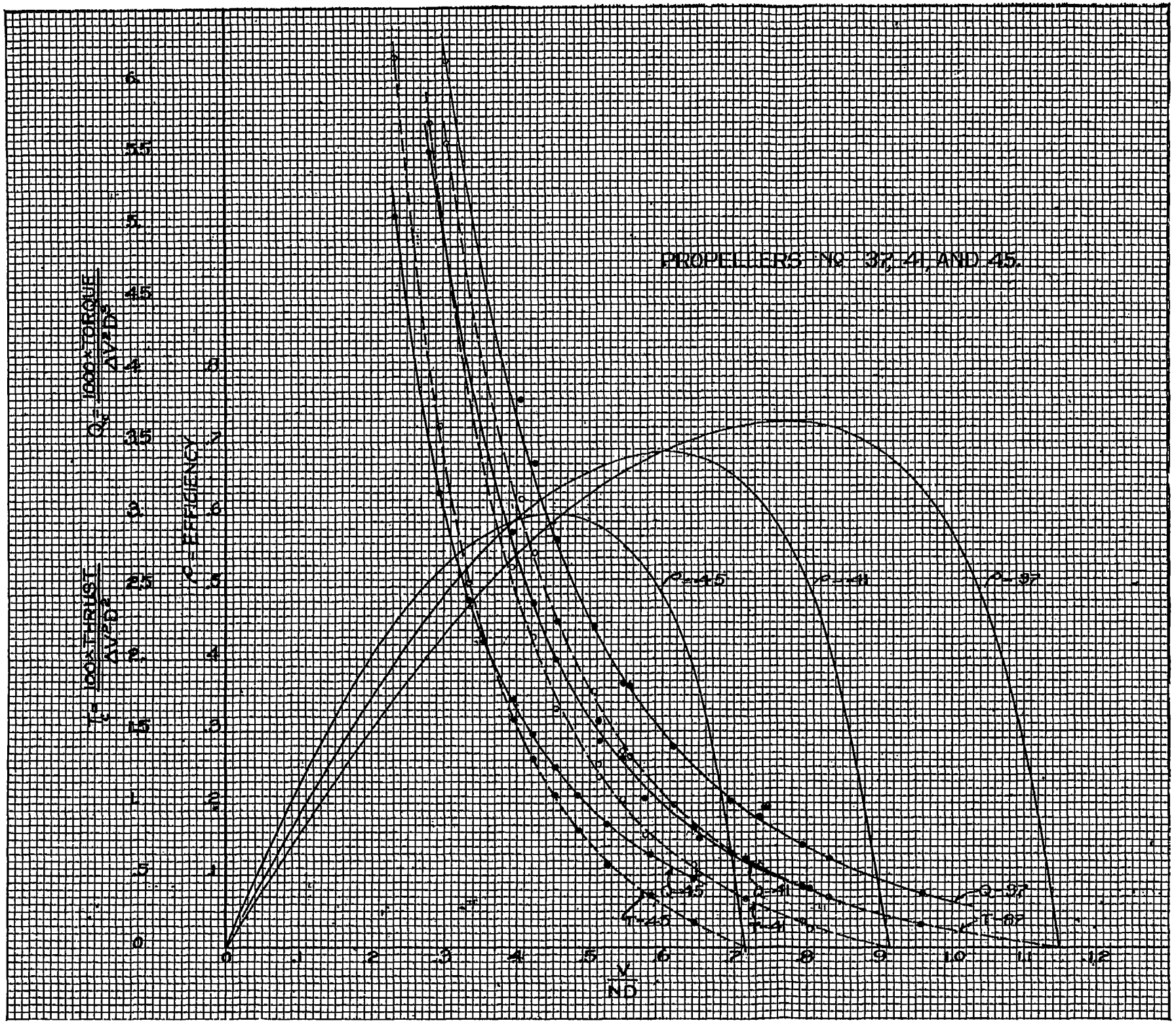
PROPELLERS No. 37, 41, AND 45.
$T_c = \frac{100 \times \text{THRUST}}{\Delta V^2 D^2}$
$Q_c = \frac{1000 \times \text{TORQUE}}{\Delta V^2 D^3}$
η = EFFICIENCY
$\frac{V}{ND}$
ρ=.45
ρ=.41
ρ=.37
Q-45
Q-41
Q-37
T-45
T-41
T-37

PLATE XVIII.

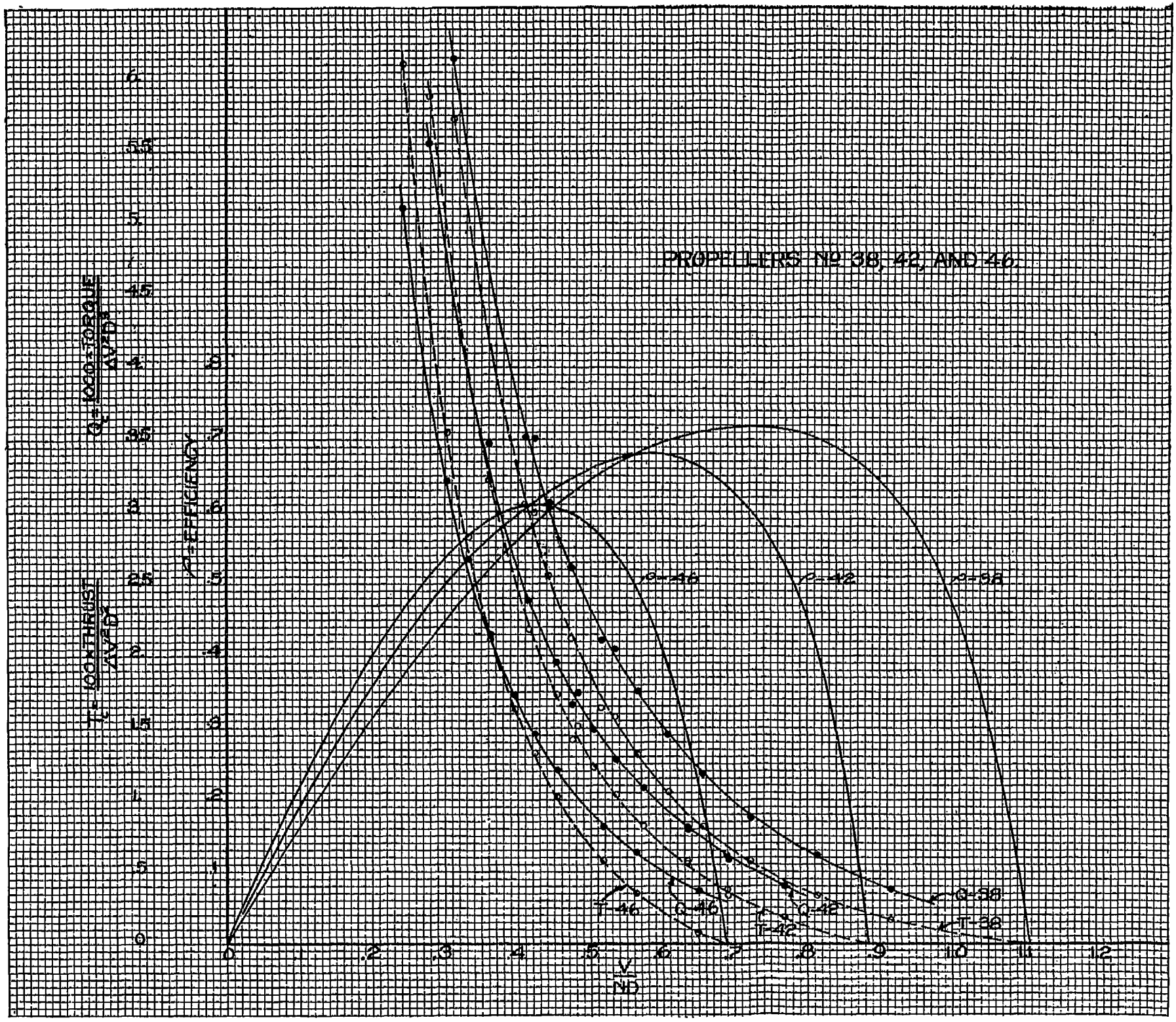
PROPELLERS Nº 38, 42, AND 46.
$T_c = \frac{100 \times THRUST}{\rho V^2 D^2}$
$Q_c = \frac{1000 \times TORQUE}{\rho V^2 D^3}$
η = EFFICIENCY
$\frac{V}{ND}$
Q-46
Q-42
Q-38
T-46
T-42
T-38

PLATE XIX.

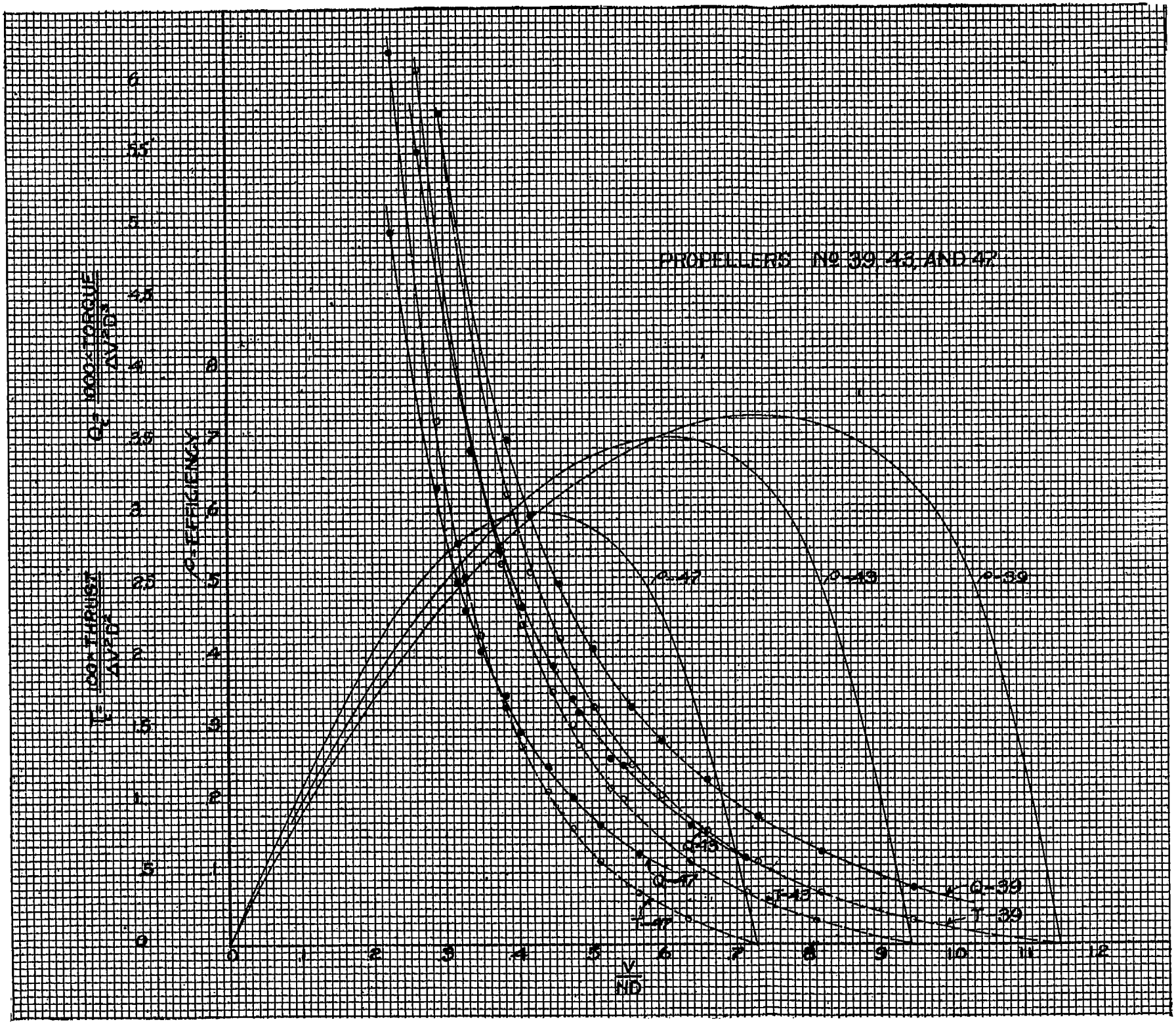
PROPELLERS Nº 39, 43, AND 47
$C_T = \frac{100 \times THRUST}{\Delta V^2 D^2}$
$C_Q = \frac{1000 \times TORQUE}{\Delta V^2 D^3}$
η = EFFICIENCY
$\frac{V}{ND}$
0
1
2
3
4
5
6
7
8
9
10
11
12
.5
1.5
2.5
3.5
4.5
5.5
6
.5
1
2
3
4
5
6
7
8
η-47
η-43
η-39
Q-47
Q-43
Q-39
T-47
T-43
T-39

PLATE XX.

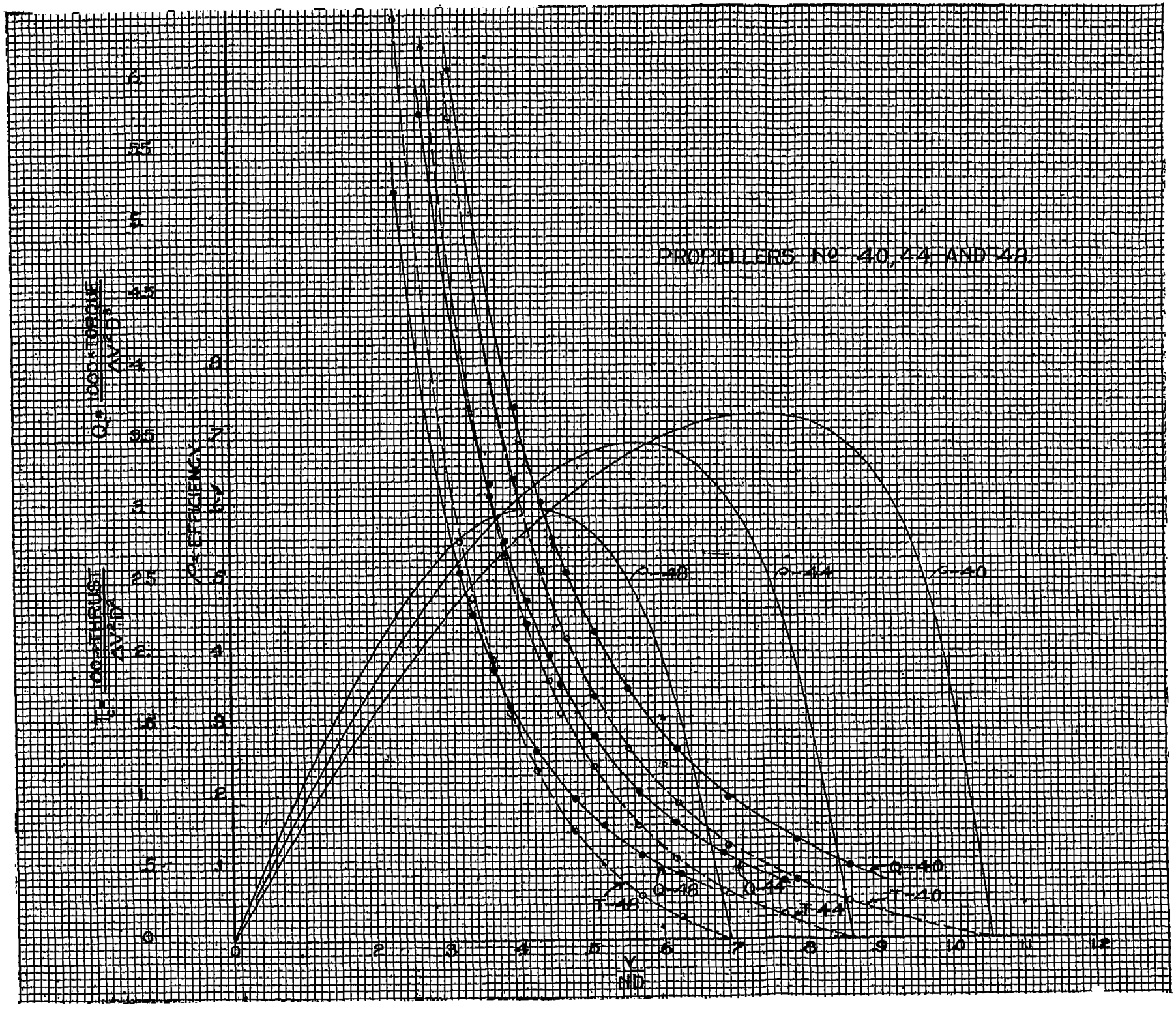
PROPELLERS Nº 40, 44 AND 48.
Q* = 100 × TORQUE / AVG Q
T* = 100 × THRUST / AVG T
η* EFFICIENCY
V / nD
Q-48
Q-44
Q-40
T-48
T-44
T-40

PLATE XXI.

TABLE VI.—*Density of air at altitudes above sea level.*

Altitude.	Mean temperature.	Barometer.	Weight of dry air.
Feet.	*° F.*	*Inches.*	*Pounds per cubic foot.*
.....	50	30	0.0789
2,000	45	27.7	.0730
4,000	40	25.7	.0685
6,000	34	23.8	.0639
8,000	28	22.1	.0601
10,000	22	20.5	.0565
12,000	15½	19.0	.0531
14,000	9½	17.6	.0497
16,000	3½	16.3	.0467
18,000	−4	15.1	.0139
20,000	−12	18.9	.0412
22,000	−20	12.9	.0389

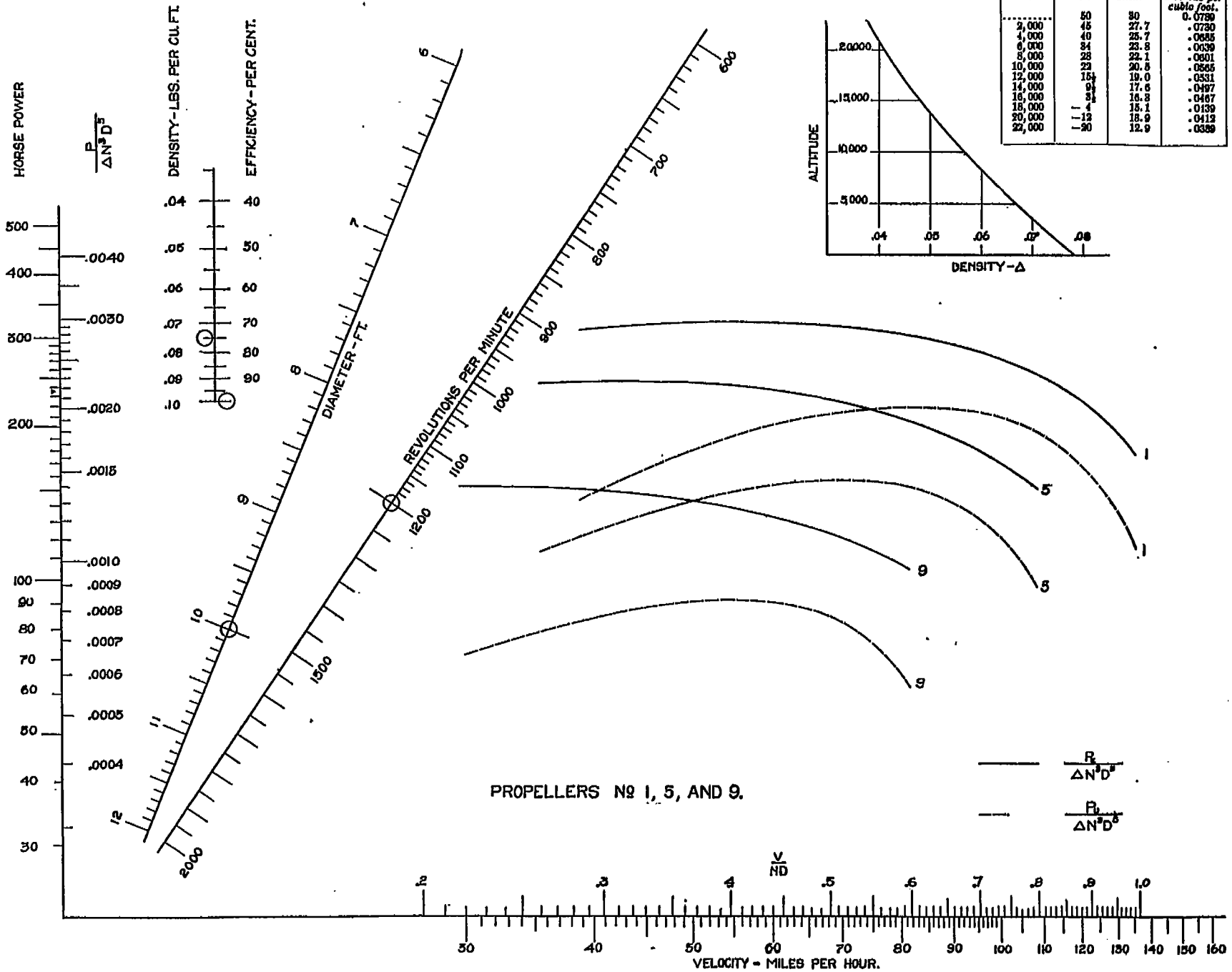

PLATE XXII.

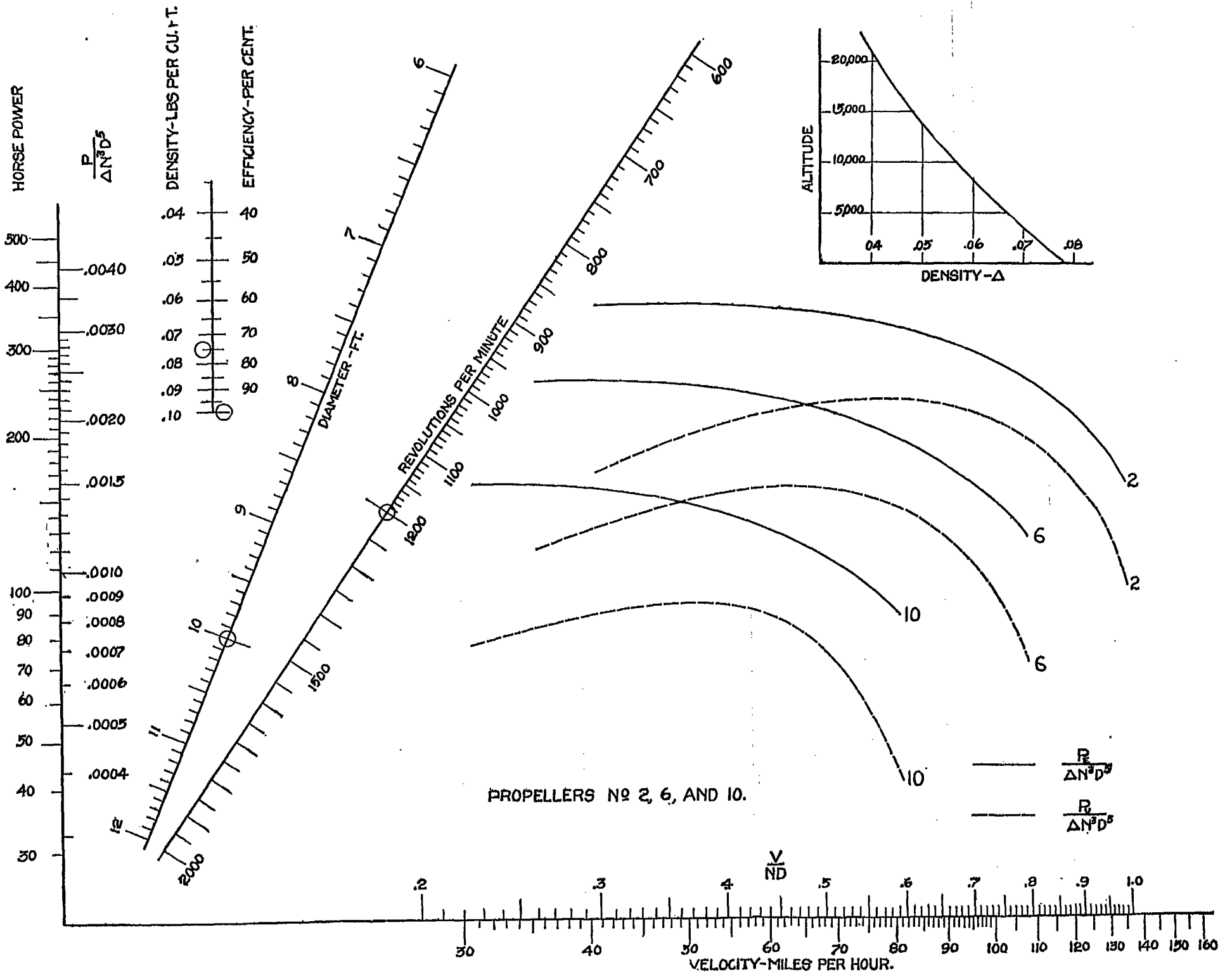
HORSE POWER
$\frac{P}{\Delta N^3 D^5}$
DENSITY-LBS PER CU. FT.
EFFICIENCY-PER CENT.
DIAMETER-FT.
REVOLUTIONS PER MINUTE
ALTITUDE
DENSITY-Δ
PROPELLERS Nº 2, 6, AND 10.
$\frac{R_E}{\Delta N^3 D^5}$
$\frac{R_L}{\Delta N^3 D^5}$
$\frac{V}{ND}$
VELOCITY-MILES PER HOUR.

PLATE XXIII

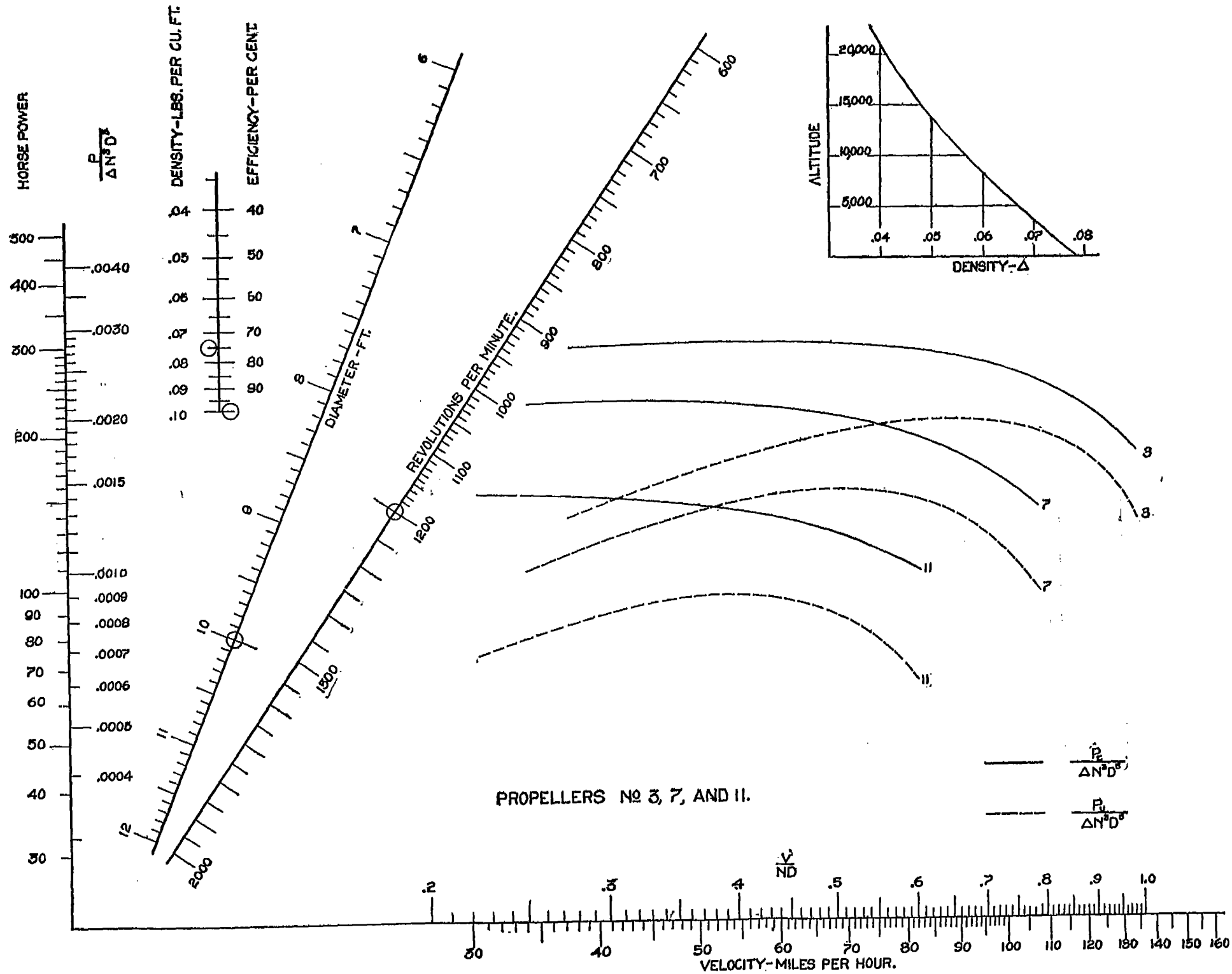
HORSE POWER
$\frac{P}{\Delta N^3 D^5}$
DENSITY-LBS. PER CU. FT.
EFFICIENCY-PER CENT
DIAMETER-FT.
REVOLUTIONS PER MINUTE.
ALTITUDE
DENSITY-Δ
PROPELLERS № 3, 7, AND 11.
$\frac{P_E}{\Delta N^3 D^5}$
$\frac{P_U}{\Delta N^3 D^5}$
$\frac{V}{ND}$
VELOCITY-MILES PER HOUR.

PLATE XXIV.

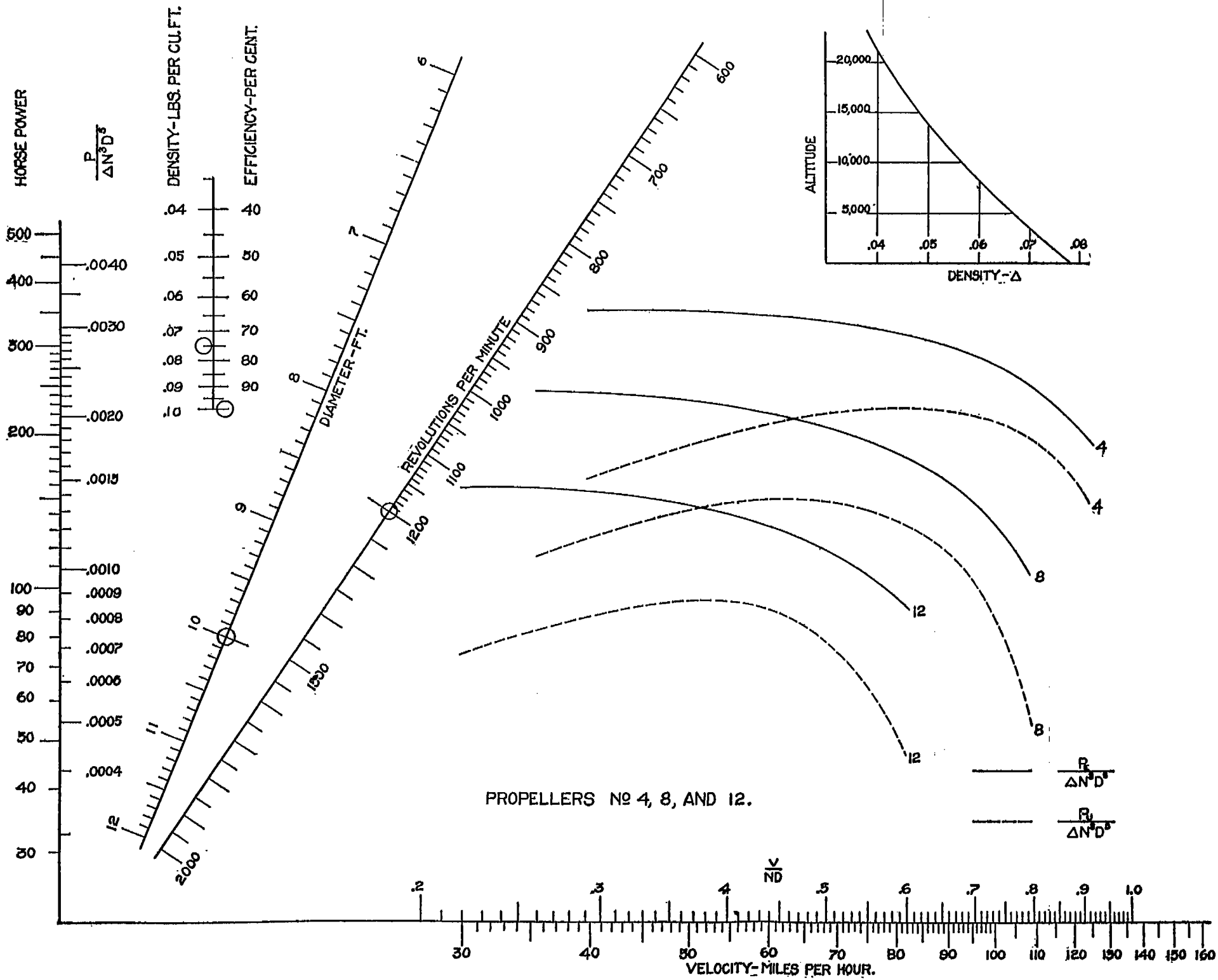
HORSE POWER
$\frac{P}{\Delta N^3 D^5}$
DENSITY-LBS. PER CU. FT.
EFFICIENCY-PER CENT.
DIAMETER-FT.
REVOLUTIONS PER MINUTE
ALTITUDE
DENSITY-Δ
PROPELLERS Nº 4, 8, AND 12.
$\frac{R_t}{\Delta N^3 D^5}$
$\frac{R_u}{\Delta N^3 D^5}$
$\frac{V}{ND}$
VELOCITY-MILES PER HOUR.

PLATE XXV.

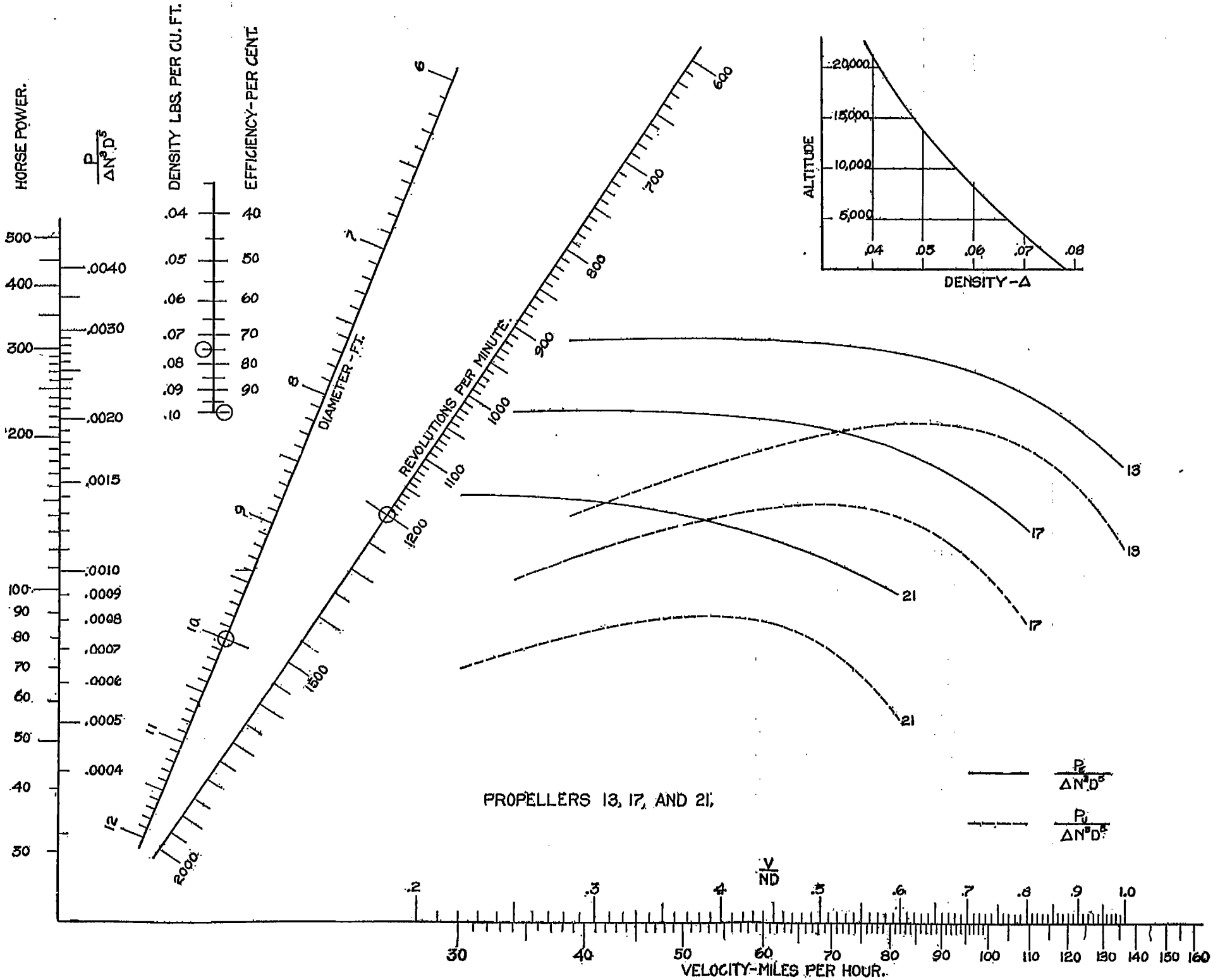
HORSE POWER.
$\frac{P}{\Delta N^3 D^5}$
DENSITY LBS. PER CU. FT.
EFFICIENCY-PER CENT.
DIAMETER-FT.
REVOLUTIONS PER MINUTE.
ALTITUDE
DENSITY-Δ
PROPELLERS 13, 17, AND 21.
$\frac{P_E}{\Delta N^3 D^5}$
$\frac{P_U}{\Delta N^3 D^5}$
$\frac{V}{ND}$
VELOCITY-MILES PER HOUR.

PLATE XXVI.

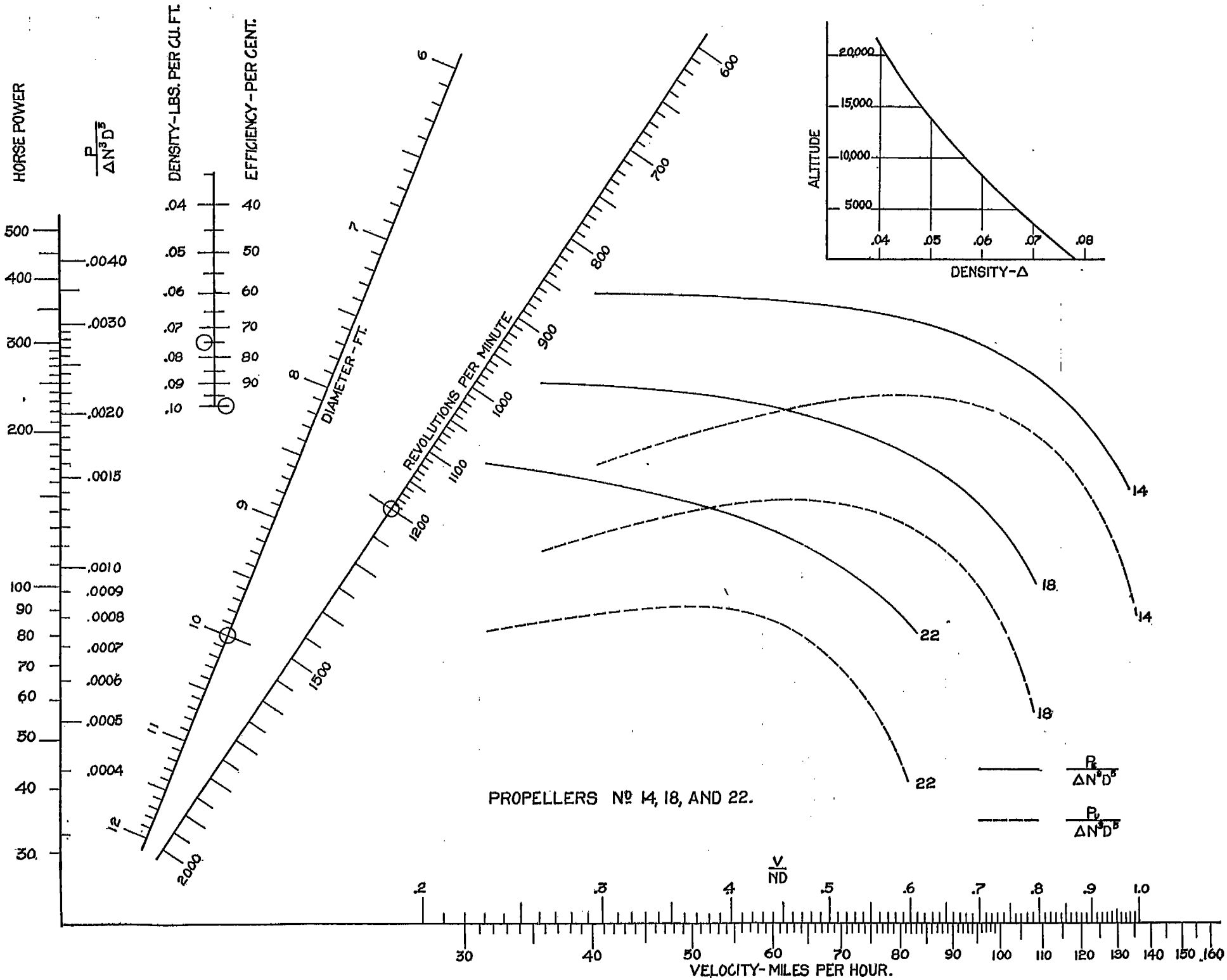
HORSE POWER
$\frac{P}{\Delta N^3 D^5}$
DENSITY-LBS. PER CU. FT.
EFFICIENCY-PER CENT.
DIAMETER-FT.
REVOLUTIONS PER MINUTE
ALTITUDE
DENSITY-Δ
PROPELLERS Nº 14, 18, AND 22.
$\frac{P_k}{\Delta N^3 D^5}$
$\frac{P_v}{\Delta N^3 D^5}$
$\frac{V}{ND}$
VELOCITY-MILES PER HOUR.

PLATE XXVII.

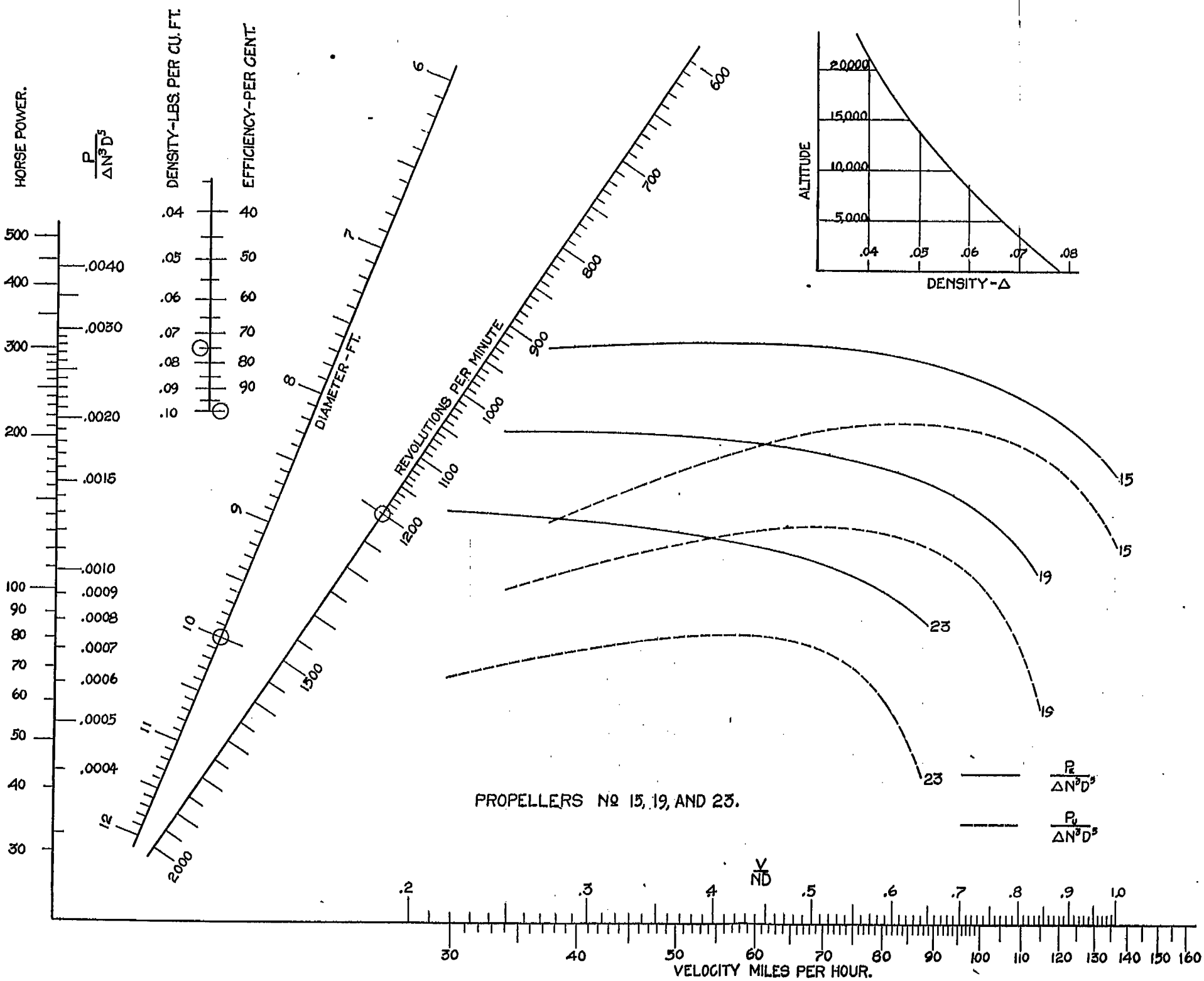

PLATE XXVIII.

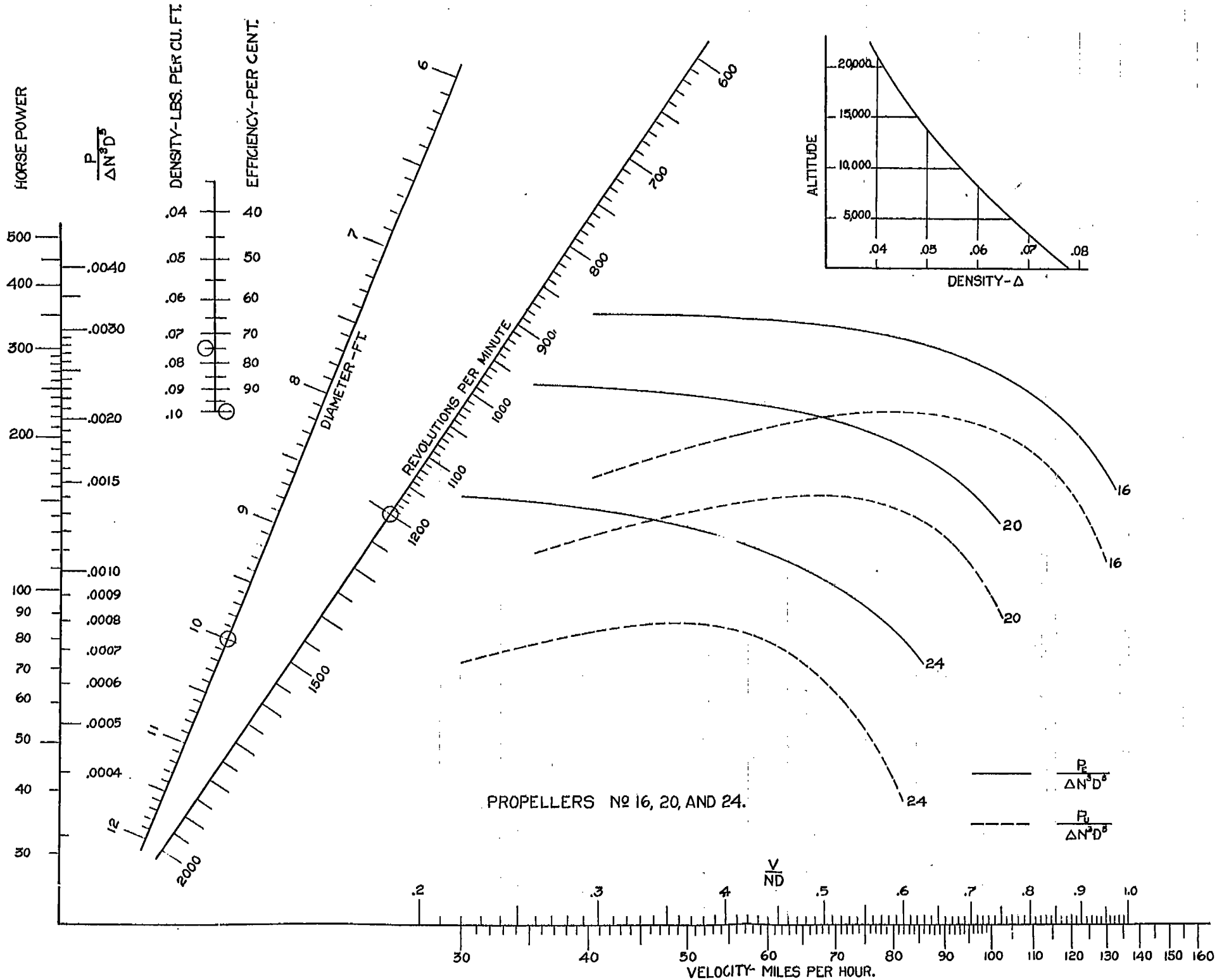
HORSE POWER
$\frac{P}{\Delta N^3 D^5}$
DENSITY-LBS. PER CU. FT.
EFFICIENCY-PER CENT.
DIAMETER-FT.
REVOLUTIONS PER MINUTE
ALTITUDE
DENSITY-Δ
PROPELLERS Nº 16, 20, AND 24.
$\frac{P_E}{\Delta N^3 D^5}$
$\frac{P_U}{\Delta N^3 D^5}$
$\frac{V}{ND}$
VELOCITY- MILES PER HOUR.

PLATE XXIX.

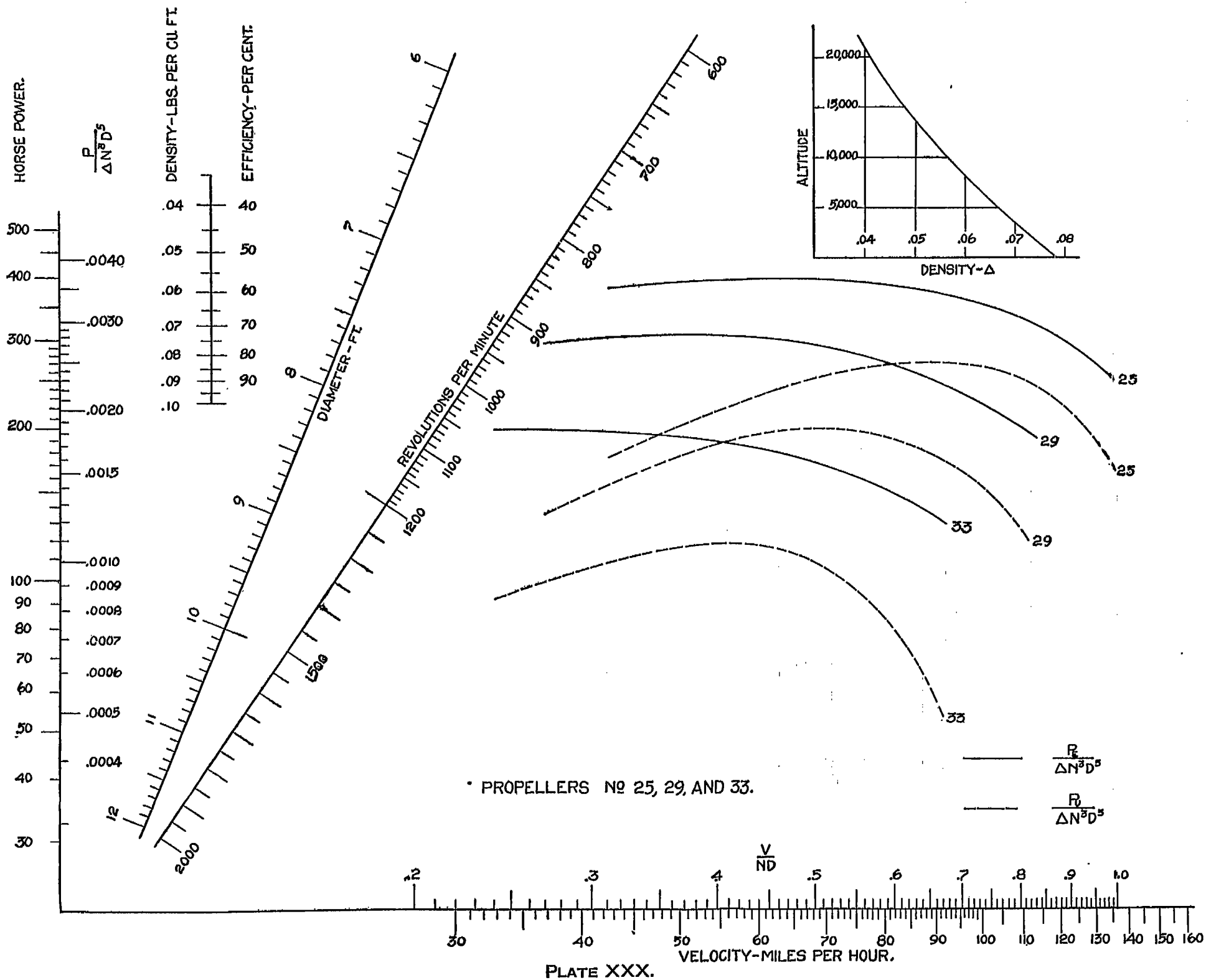
HORSE POWER.
$\frac{P}{\Delta N^3 D^5}$
DENSITY-LBS. PER CU. FT.
EFFICIENCY-PER CENT.
DIAMETER-FT.
REVOLUTIONS PER MINUTE
ALTITUDE
DENSITY-Δ
$\frac{V}{ND}$
VELOCITY-MILES PER HOUR.
* PROPELLERS № 25, 29, AND 33.
$\frac{R_t}{\Delta N^3 D^5}$
$\frac{R_v}{\Delta N^3 D^5}$

PLATE XXX.

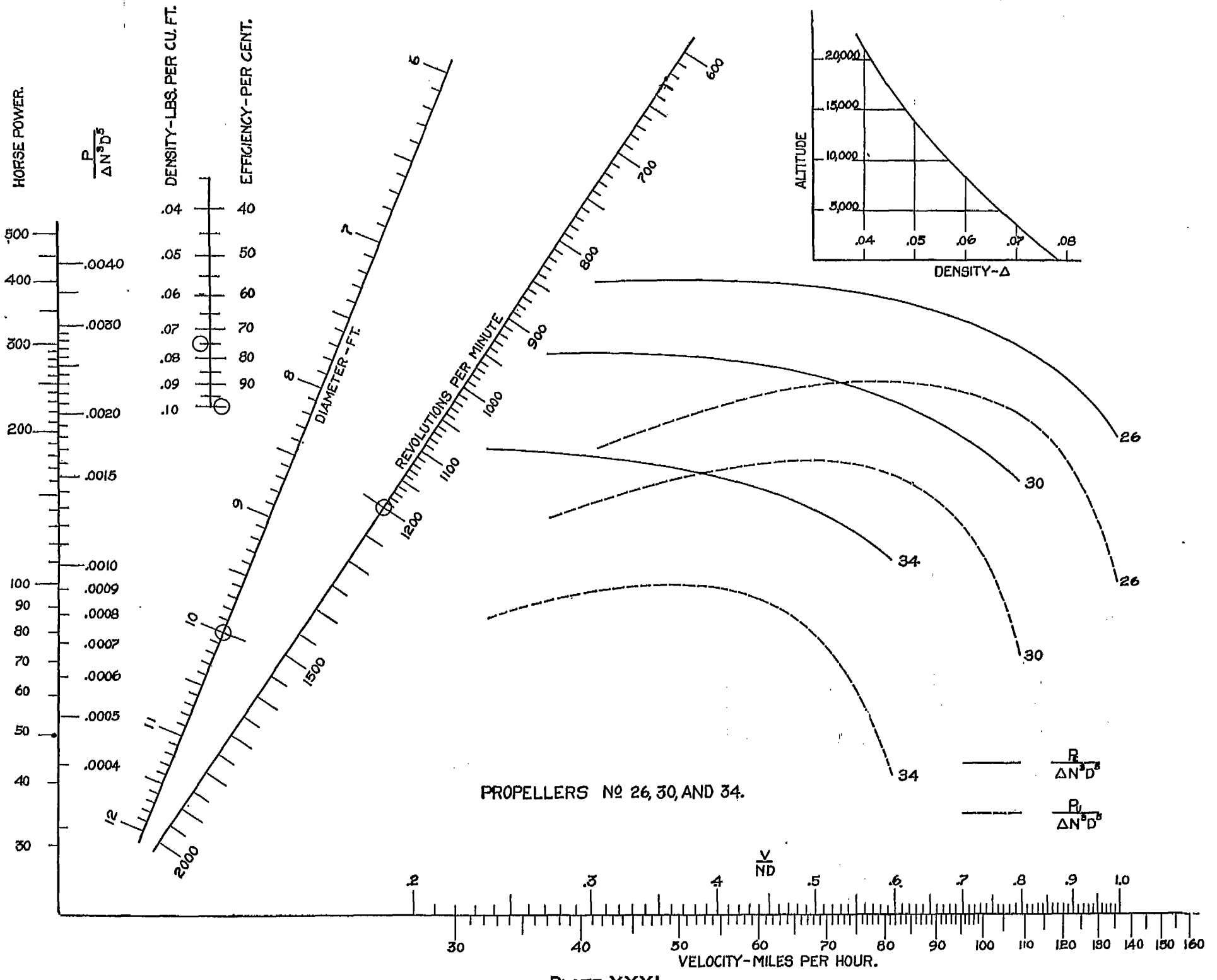
HORSE POWER.
$\frac{P}{\Delta N^3 D^5}$
DENSITY-LBS. PER CU. FT.
EFFICIENCY-PER CENT.
DIAMETER-FT.
REVOLUTIONS PER MINUTE
ALTITUDE
DENSITY-Δ
PROPELLERS Nº 26, 30, AND 34.
$\frac{P_t}{\Delta N^3 D^5}$
$\frac{P_u}{\Delta N^3 D^5}$
$\frac{V}{ND}$
VELOCITY-MILES PER HOUR.

PLATE XXXI.

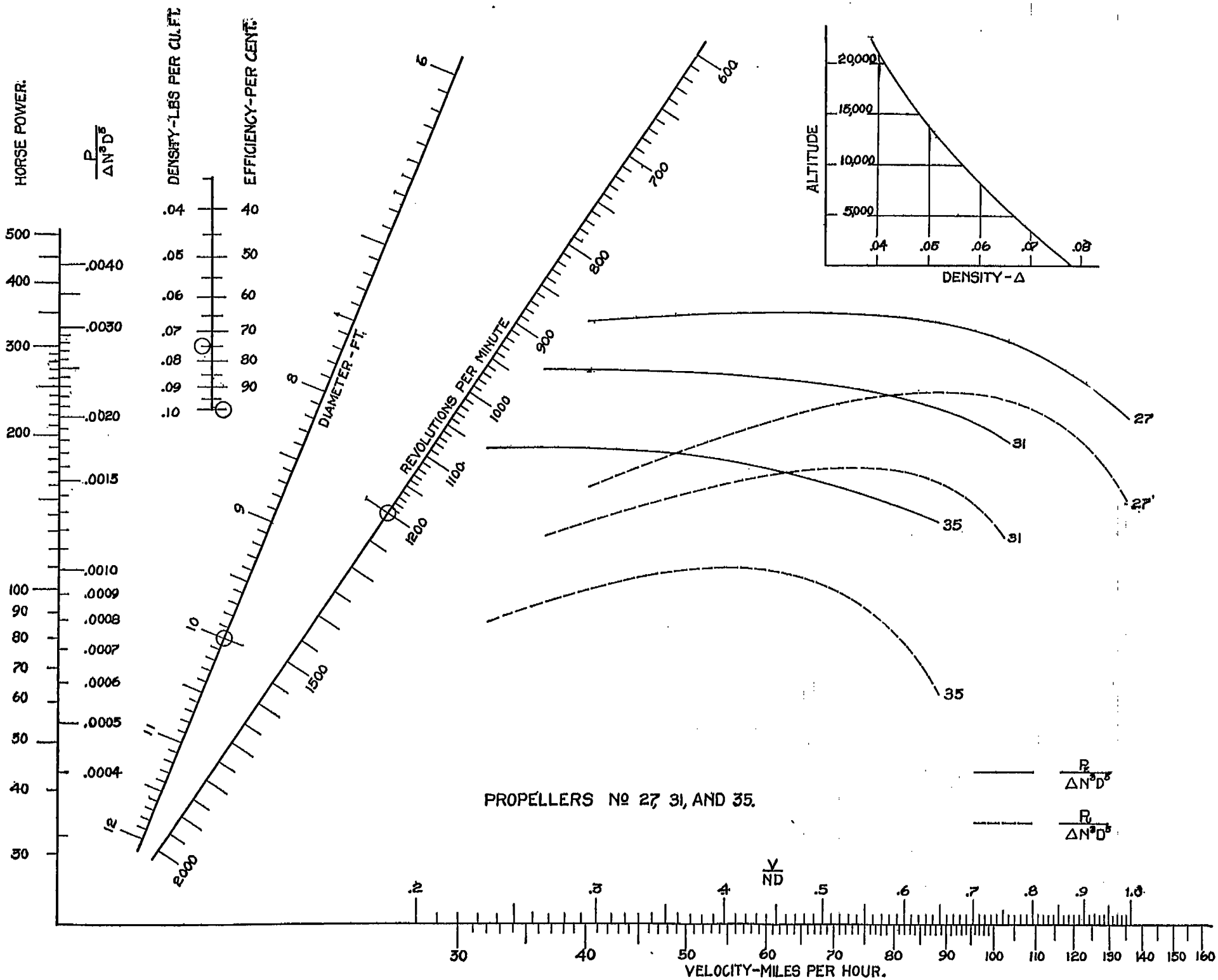
HORSE POWER.
$\frac{P}{\Delta N^3 D^5}$
DENSITY-LBS PER CU.FT.
EFFICIENCY-PER CENT.
DIAMETER-FT.
REVOLUTIONS PER MINUTE
ALTITUDE
DENSITY-Δ
PROPELLERS Nº 27, 31, AND 35.
$\frac{R_z}{\Delta N^3 D^5}$
$\frac{R_u}{\Delta N^3 D^5}$
$\frac{V}{ND}$
VELOCITY-MILES PER HOUR.

PLATE XXXII.

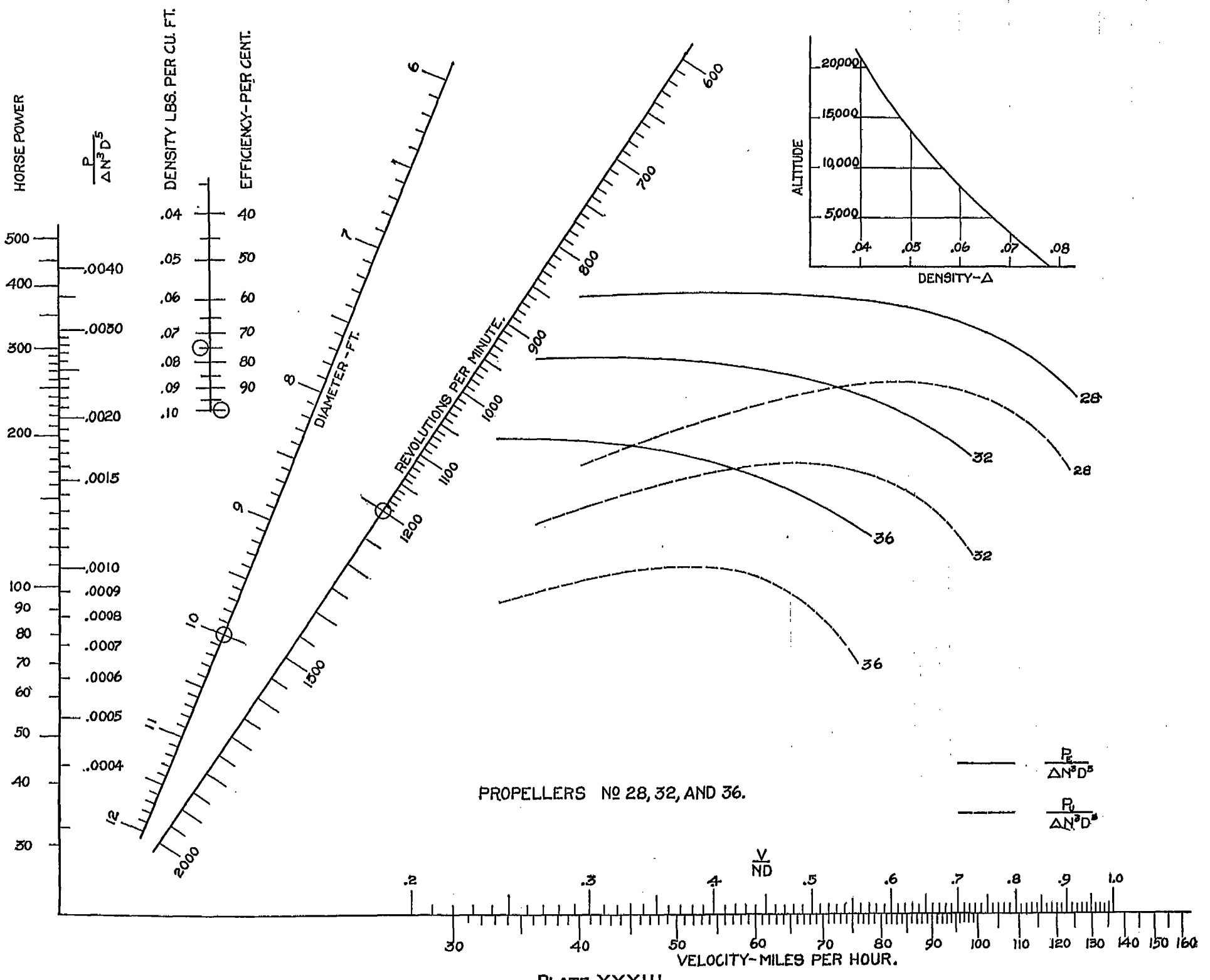

PLATE XXXIII.

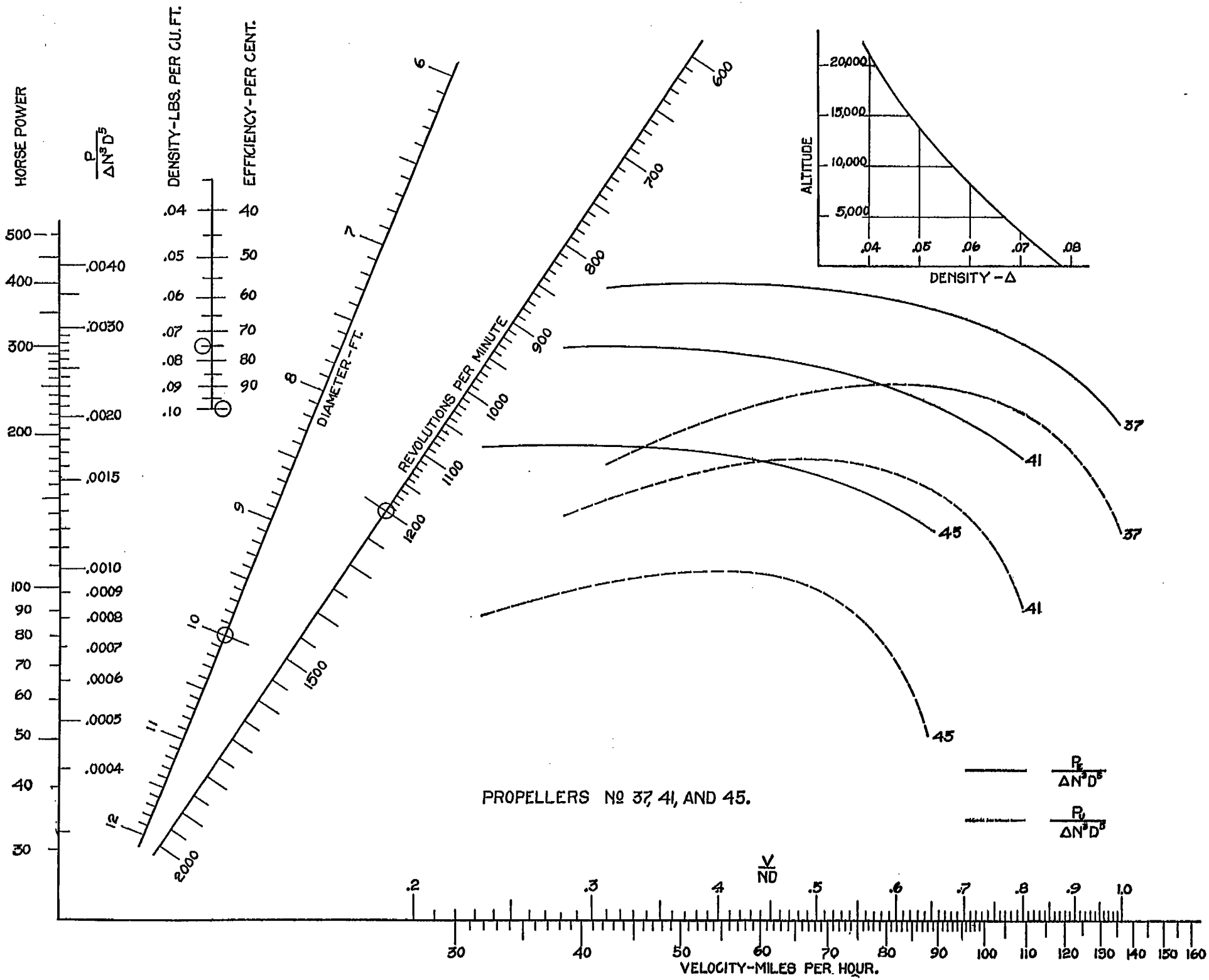
HORSE POWER
$\frac{P}{\Delta N^3 D^5}$
DENSITY-LBS. PER CU. FT.
EFFICIENCY-PER CENT.
DIAMETER-FT.
REVOLUTIONS PER MINUTE
ALTITUDE
DENSITY - Δ
PROPELLERS Nº 37, 41, AND 45.
$\frac{P_E}{\Delta N^3 D^5}$
$\frac{P_V}{\Delta N^3 D^5}$
$\frac{V}{ND}$
VELOCITY-MILES PER HOUR.

PLATE XXXIV.

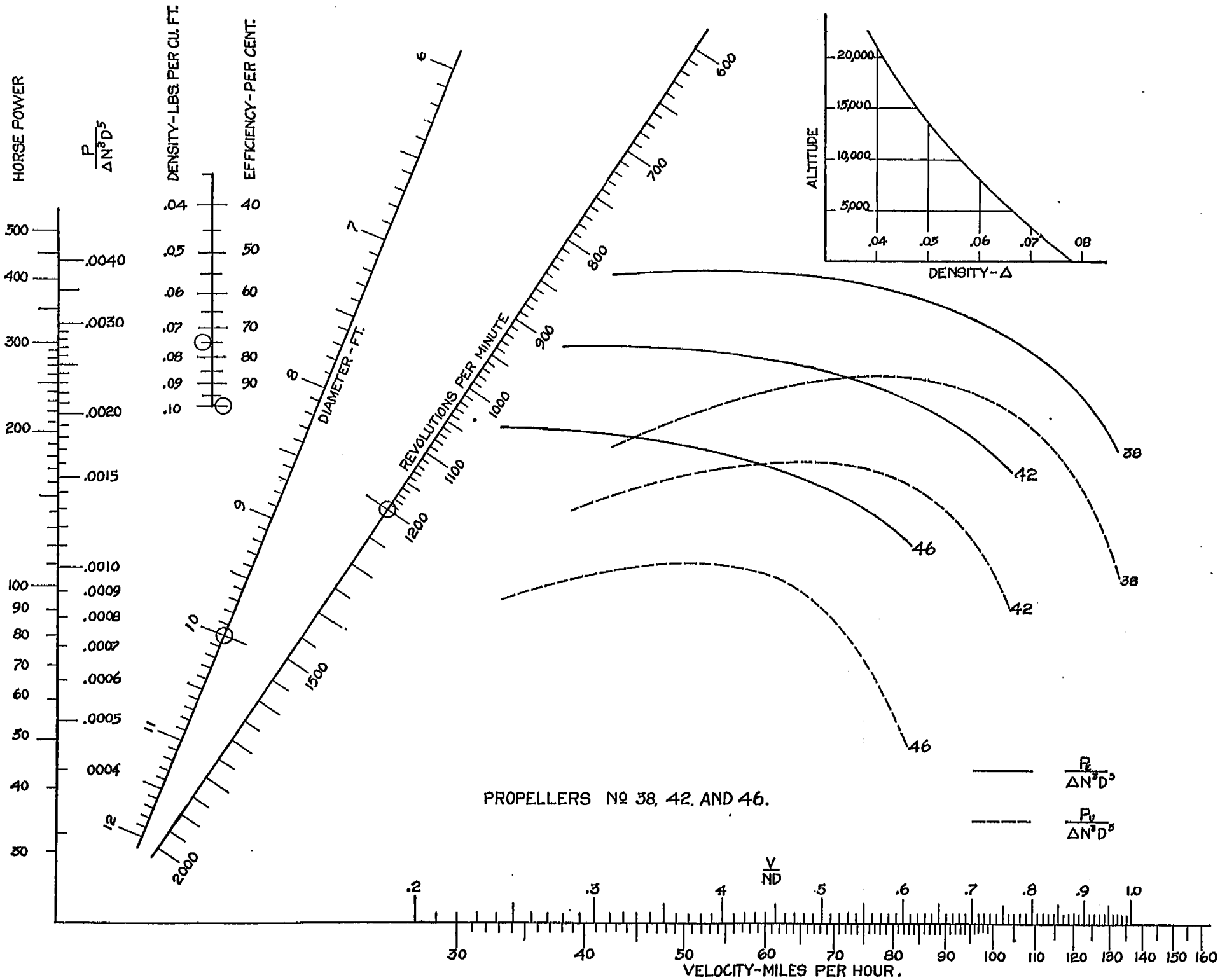
HORSE POWER
$\frac{P}{\Delta N^3 D^5}$
DENSITY-LBS. PER CU. FT.
EFFICIENCY-PER CENT.
DIAMETER-FT.
REVOLUTIONS PER MINUTE
ALTITUDE
DENSITY-Δ
PROPELLERS Nº 38, 42, AND 46.
$\frac{P_E}{\Delta N^3 D^5}$
$\frac{P_V}{\Delta N^3 D^5}$
$\frac{V}{ND}$
VELOCITY-MILES PER HOUR.

PLATE XXXV.

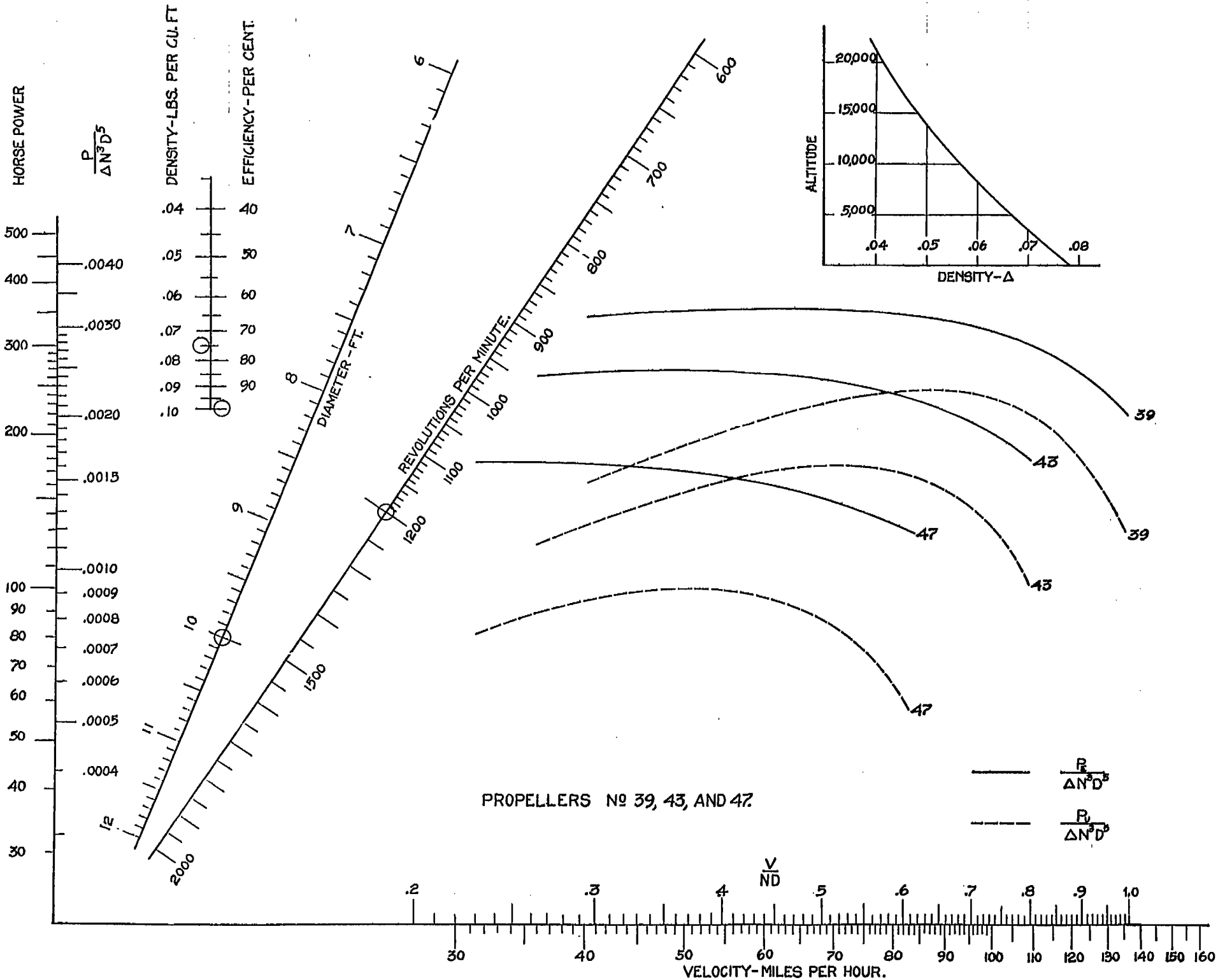
HORSE POWER
$\frac{P}{\Delta N^3 D^5}$
DENSITY-LBS. PER CU. FT
EFFICIENCY-PER CENT.
DIAMETER-FT.
REVOLUTIONS PER MINUTE.
ALTITUDE
DENSITY-Δ
PROPELLERS Nº 39, 43, AND 47.
$\frac{P_E}{\Delta N^3 D^5}$
$\frac{P_V}{\Delta N^3 D^5}$
$\frac{V}{ND}$
VELOCITY-MILES PER HOUR.

PLATE XXXVI.

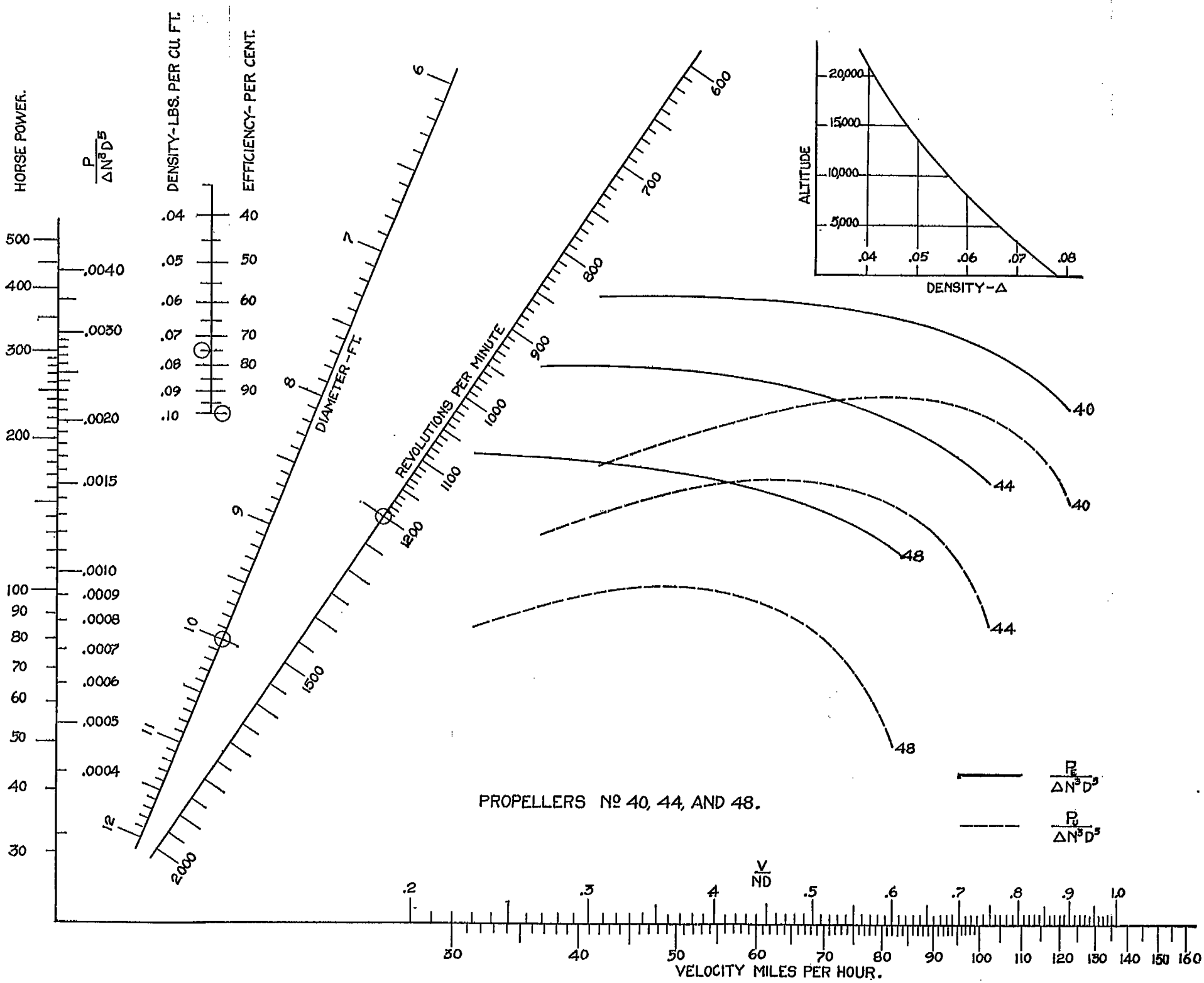

PLATE XXXVII.