REPORT 1251

STRESS ANALYSIS OF CIRCULAR SEMIMONOCOQUE CYLINDERS WITH CUTOUTS [1]

By Harvey G. McComb, Jr.

SUMMARY

A method is presented for analyzing the stresses about cutouts in circular semimonocoque cylinders with flexible rings. The method involves the use of so-called perturbation stress distributions which are superposed on the stress distribution that would exist in the structure with no cutout in such a way as to give the effects of a cutout. The method can be used for any loading case for which the structure without the cutout can be analyzed and is sufficiently versatile to account for stringer and shear reinforcement about the cutout.

INTRODUCTION

An airplane fuselage usually has openings or cutouts for entrance doors, cargo doors, windows, and many other purposes. The presence of such openings may result in a considerable redistribution of stress in the structure. Some knowledge of this stress redistribution is desirable in the structural design of fuselages near cutouts.

A large portion of the structure of many fuselages can be represented, approximately, by a circular semimonocoque cylinder, that is, a thin-walled circular cylinder stiffened by stringers (axial stiffening members) and rings (circumferential stiffening members). Some previous investigations relating to the problem of stress analysis of cylindrical semimonocoque shells with cutouts were reported in references 1 to 4. One limitation common to all of these analyses is that the flexibility of the rings or circumferential-stiffening members is neglected. In reference 5, Cicala discussed this limitation as well as certain other limitations in some of the previous investigations and introduced the idea that the effect of a cutout can be reproduced by superposing certain perturbation stress states on the stresses which would occur in the shell without a cutout.

The problem discussed by Cicala in reference 5 is that of a cutout in a circular semimonocoque cylinder which is long in comparison to the length of the cutout. The analysis of reference 5 is somewhat limited because it can be used only for loading conditions which produce stringer stresses longitudinally antisymmetric about the center line of the cutout (for example, torsion), and it cannot take into consideration the effects of coaming stringer reinforcement. The present report is an extension of the approach of Cicala and presents a method of analysis which can be used with more general loading conditions and with either shear or stringer reinforcement about the cutout.

In reference 6 the stress perturbation technique is applied to the analysis of stresses about cutouts in flat sheet-stringer panels under axial load. Three basic unit perturbation solutions were used as tools in this method of analysis. In part I of this report the analogous perturbation approach is described for the stress analysis of circular semimonocoque cylinders with cutouts. The three perturbation-solution tools for circular semimonocoque cylinders analogous to those for the flat sheet-stringer panels of reference 6 are developed in part II of this report.

SYMBOLS

A effective cross-sectional area of a stringer

A^* cross-sectional area of additional portion of a reinforced stringer

$A_n=3B\delta^2-1+\cos n\delta$

$a_{ni}=\dfrac{\Delta_{ti}f_n(i)}{2L\sin\dfrac{n\delta}{2}}\qquad(n\geqq 2)$

$B=\dfrac{E}{G}\dfrac{t'}{t}\dfrac{R^2}{L^2}$

$B_n=3B\delta^2+2(1-\cos n\delta)$

b arc distance between stringers, $R\delta$

$b_{ni}=\dfrac{\Delta_{ti}f_n(i)}{2L\sin\dfrac{n\delta}{2}}\qquad(n\geqq 2)$

$C=\dfrac{t'R^6}{IL^3}$

$D_n=\dfrac{2(\beta_n-1)}{\gamma_n^2}$

$D_{rn}=\dfrac{1}{(rm+n)^2[(rm+n)^2-1]}$

d_n coefficient in trigonometric series for δ_{0j}

E Young's modulus of elasticity

F_{tj} tangential force on ring i uniformly distributed between stringer j and stringer $j+1$

$f_n(i)$ coefficient in trigonometric series for stringer loads

G shear modulus of elasticity

[1] Supersedes NACA TN 3199, 1954 and NACA TN 3200, 1954 by Harvey G. McComb, Jr., and NACA TN 3460, 1955 by Harvey G. McComb, Jr. and Emmet F. Low, Jr.

$H_1(n,\phi)=\sum_{r=-\infty}^{\infty} D_{rn}\cos(rm+n)\phi$

$H_2(n,\phi)=\sum_{r=-\infty}^{\infty} (-1)^r D_{rn}\sin(rm+n)\phi$

I effective moment of inertia of a ring cross section

i,ξ longitudinal indices, indicating rings and bays

J_h has the value 1 when h is an integer and has the value 0 when h is not an integer

j,η circumferential indices, indicating stringers and panel rows

k,l,r,s integers

L distance between rings

$M(i,\phi)$ bending moment in ring i

M_1,M_2 applied moment and torque, respectively (see fig. 5)

m total number of stringers in cylinder, $m\geqq 3$

n index of terms in a trigonometric series

P external concentrated force in the longitudinal direction applied to a stringer at its intersection with a ring, lb

p_{ij} stringer load in stringer j at ring i

$\bar{p}_{ij}$ basic stringer load in stringer j at ring i

$p_{ij}(\xi,\eta)$ load in stringer j at ring i due to a unit concentrated perturbation load on stringer η at ring ξ

$p_{ij}[\xi,\eta]$ load in stringer j at ring i due to a unit shear perturbation load about shear panel (ξ,η)

Q external shear force per unit length applied about a shear panel, lb/in.

q_{ij} shear flow in shear panel (i,j)

$\bar{q}_{ij}$ basic shear flow in shear panel (i,j)

$q_{ij}(\xi,\eta)$ shear flow in shear panel (i,j) due to a unit concentrated perturbation load on stringer η at ring ξ

$q_{ij}[\xi,\eta]$ shear flow in shear panel (i,j) due to a unit shear perturbation load about shear panel (ξ,η)

R radius to middle surface of sheet

S external force in the longitudinal direction uniformly distributed along that portion of a stringer which lies between adjacent rings, lb

$S_n=\sum_{r=-\infty}^{\infty} D_{rn}^2$

$T(i,\phi)$ thrust in ring i

t thickness of sheet

t^* thickness of additional portion of a reinforced shear panel, that is, a doubler plate

t' thickness of all material carrying bending stresses in cylinder if uniformly distributed around perimeter, A/b

U total stress energy

$V(i,\phi)$ transverse shear in ring i

$\left.\begin{matrix}\alpha_{1n},\alpha_{2n},\\ \alpha_{3n},\alpha_{4n}\end{matrix}\right\}$ arbitrary constants

$$\beta_n=3+\frac{4+3\dfrac{B\delta^2}{\sin^2\dfrac{n\delta}{2}}}{12CS_n}$$

$$\gamma_n=-2+\frac{1-\dfrac{3}{2}\dfrac{B\delta^2}{\sin^2\dfrac{n\delta}{2}}}{12CS_n}$$

Δ_{ii} second central difference in the i direction or longitudinal direction, that is $\Delta_{ii}g(i)=g(i+1)-2g(i)+g(i-1)$

δ central angle between stringers, $2\pi/m$

δ_{rs} Kronecker delta; takes the value 1 when $r=s$ and takes the value 0 when $r\neq s$

$\zeta_n=\pm e^{-\psi_n}$

$\Lambda_{1n},\Lambda_{2n}$ quantities defined immediately following equation (24)

ϕ angular coordinate for rings

$$\chi_n=\frac{1}{2}\cos^{-1}\left[\frac{\beta_n-1}{2}-\sqrt{\left(\frac{\beta_n+1}{2}\right)^2-\gamma_n^2}\right]\qquad (D_n>1)$$

$$=\frac{1}{2}\cosh^{-1}\left[\frac{\beta_n-1}{2}-\sqrt{\left(\frac{\beta_n+1}{2}\right)^2-\gamma_n^2}\right]\qquad (D_n<1)$$

$$\psi_n=\frac{1}{2}\cosh^{-1}\left[\frac{\beta_n-1}{2}+\sqrt{\left(\frac{\beta_n+1}{2}\right)^2-\gamma_n^2}\right]$$

BASIC ASSUMPTIONS

A structure of the type considered in this report is shown in figure 1. It consists of a thin-walled circular cylinder stiffened by stringers in the longitudinal direction and by rings in the circumferential direction. The rings and stringers divide the thin-walled shell into rectangular panels which are called shear panels. The cutout is assumed to be rectangular—it removes an arbitrary number of shear panels and interrupts the corresponding stringers.

Some loading conditions which can be handled with this method of analysis are illustrated in figure 1. Other loading conditions are permissible if the stress distribution in the cylinder without the cutout is known.

A typical portion of the structure is shown in figure 2 with the index system used in this report to designate stringers, rings, bays, and panel rows. Note that the intersection of

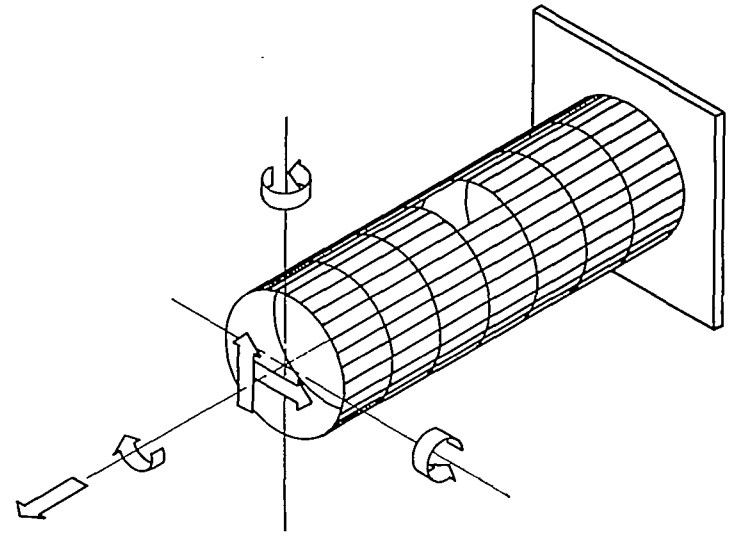

FIGURE 1.—Circular semimonocoque cylinder with cutout.

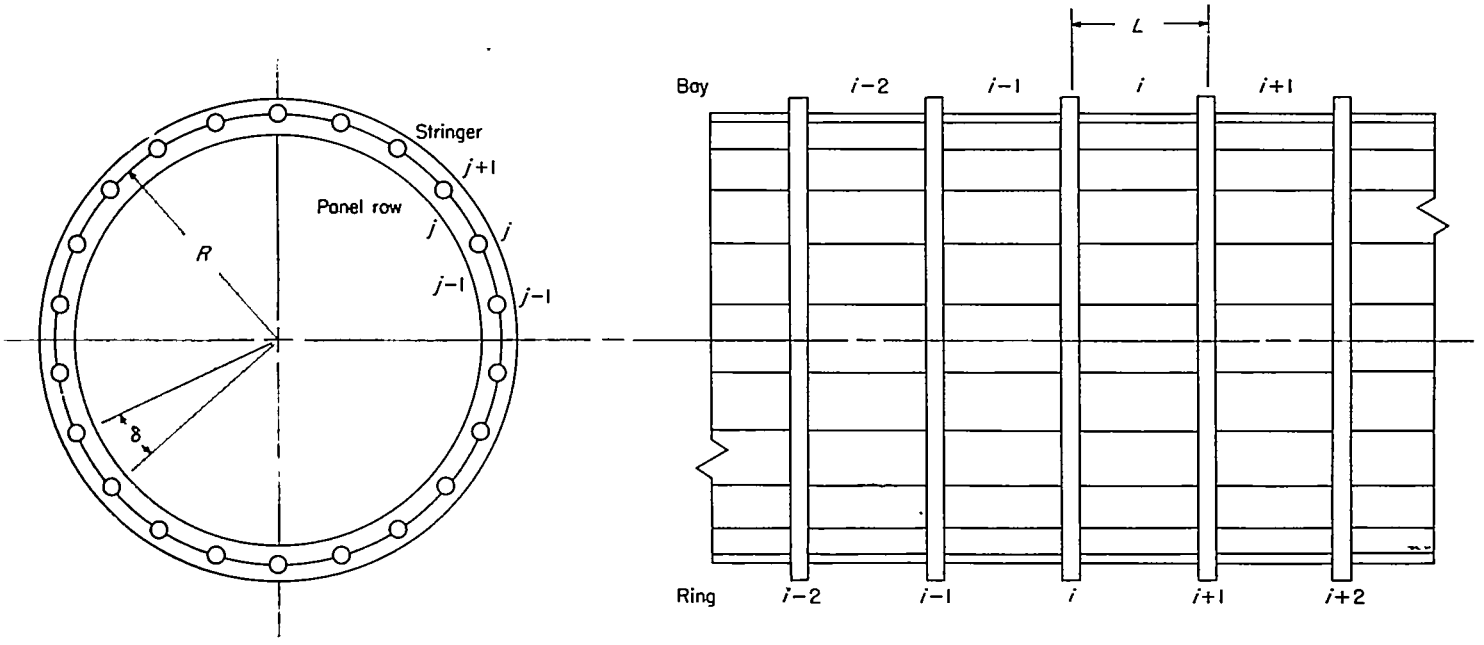

FIGURE 2.—Portion of typical cylinder.

ring i and stringer j occurs at the lower left-hand corner of shear panel (i,j).

The analysis is based on the following assumptions regarding the properties of the structure:

(a) The cylinder is long relative to the length of the cutout.

(b) The stringers are uniform and equally spaced around the shell, and the sheet is of constant thickness.

(c) The stringers carry only direct stress, and the sheet takes only shear stress which is constant within each shear panel; thus stringer stresses vary linearly between adjacent rings.

(d) The rings are uniform and have a finite bending stiffness in their own planes, but they do not restrain longitudinal displacements of the stringers. The bending of the rings is inextensional.

(e) The difference between the radius to the middle surface of the sheet and the radius to the neutral axis of a ring is negligible.

(f) The structure is elastic and no buckling occurs.

I—ANALYSIS OF STRESSES ABOUT CUTOUTS BY A PERTURBATION LOAD TECHNIQUE

PERTURBATION STRESS DISTRIBUTIONS

The tools for the method of analysis to be described are the stress distributions due to three types of loads, called perturbation loads, applied to an infinitely long circular cylinder with no cutout. One perturbation load consists of a concentrated force P imposed on one stringer of the shell at its intersection with a ring, the force acting in the direction of the stringer. This load is illustrated in figure 3 (a) and is called the concentrated perturbation load. A second type, illustrated in figure 3 (b), is called the distributed perturbation load and consists of a force S uniformly distributed along the portion of one stringer which extends between two adjacent rings, the force acting in the direction of the stringer. The third type, shown in figure 3 (c), is called the shear perturbation load and consists of uniformly distributed forces per unit length Q applied along the stringers and rings that border one shear panel of the shell, the forces acting in such a way as to cause pure shear in that panel.

For each of the three perturbation loads, formulas are developed in part II of this report which give stringer loads in every stringer at each ring and shear flows in each shear panel of the shell. By use of these formulas, tables of coefficients can be computed which give stringer loads and shear flows in the neighborhood of each perturbation load due to a unit magnitude of that load. Such tables for a cylinder having 36 stringers and various values of the structural parameters B and C are presented as tables 1 to 30. These tables were calculated on an IBM Card-Programmed Electronic Calculator. The application of these tables is not limited to cylinders with 36 stringers. In general, the total stringer area can simply be redistributed into 36 fictitious stringers. The values of the parameters B and C are not changed by such a redistribution of stringer area. Then the tables can be thought of as presenting (a) the load which is taken by all of the normal-stress-carrying material up to 5° on either side of the location of a fictitious stringer and (b) the shear flows at points in the sheet halfway between fictitious stringers.

Part (a) of each table contains the values of p_{ij} and $q_{ij}L$ due to a concentrated perturbation load $P=1$ on stringer $j=0$ at ring station $i=0$. Part (b) contains the values of p_{ij} and $q_{ij}L$ due to a distributed perturbation load of total magnitude $S=1$ on stringer $j=0$ between rings $i=0$ and $i=1$. Part (c) contains the values of p_{ij}/L and q_{ij} due to a shear perturbation load per unit length of magnitude $Q=1$ about shear panel (0,0). The positive senses of the perturbation loads are the senses shown in figure 3; stringer loads are assumed positive in tension, and shear flow is positive when an element of the sheet is loaded by shears which act

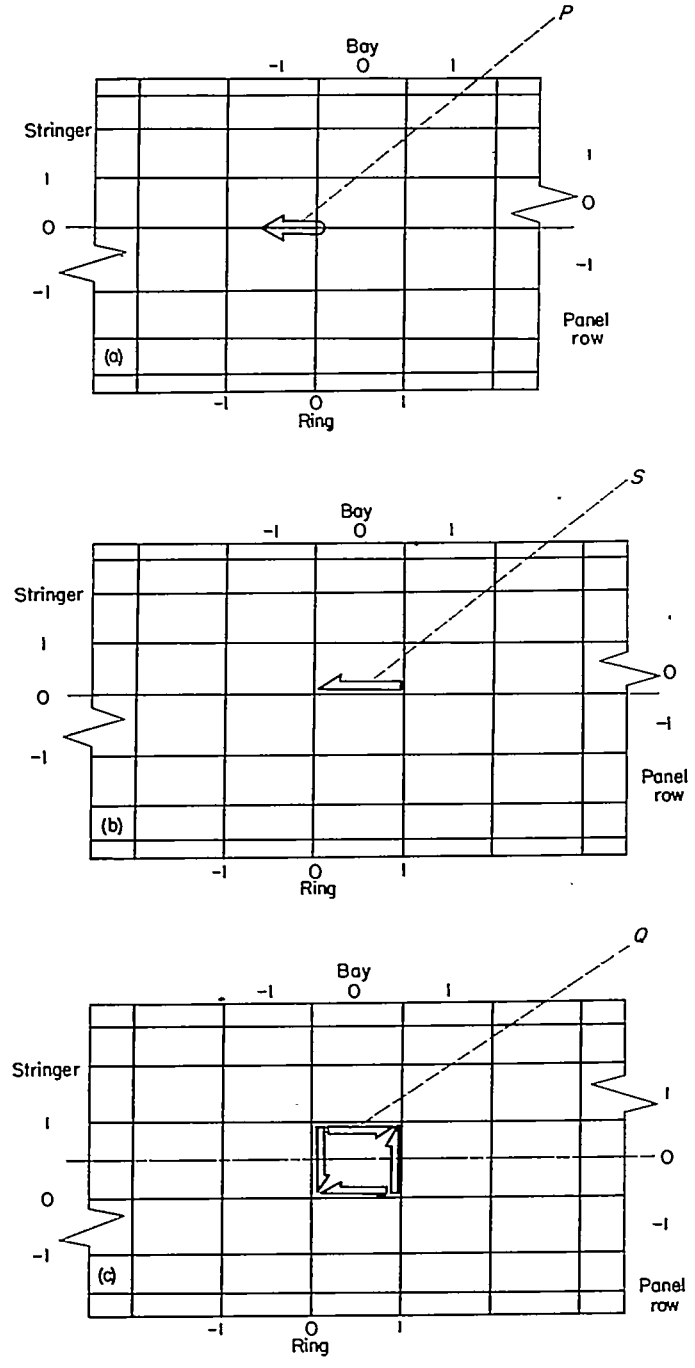

(a) Concentrated.
(b) Distributed.
(c) Shear.

FIGURE 3.—Perturbation loads.

in the positive sense of the shear perturbation load. The solutions for arbitrary locations of the perturbation loads are readily obtained from the tables by means of changes of indices.

The application of these perturbation loads and the stress distributions caused by them in the stress analysis of circular semimonocoque cylinders with cutouts is discussed in the following section. The perturbation solutions are exact only for infinitely long cylinders. However, in the solution of a cutout problem, the perturbation loads are applied in self-equilibrating groups in order not to disturb the overall equilibrium of the structure; therefore, the stresses due to the perturbation loads decay rapidly in the longitudinal direction. Consequently, the application of perturbation stress distributions for an infinitely long cylinder to a cylinder of finite length is justified if the vicinity of application of the perturbation loads is far from the ends of the cylinder.

METHOD OF ANALYSIS

STRUCTURE WITH NO REINFORCEMENT ABOUT CUTOUT

Application of perturbation loads.—Consider, first, a structure like that shown in figure 1 which has no reinforcement about the cutout. The stress distribution in such a shell can be thought of as a superposition of the stresses which would exist in the structure without a cutout and perturbation stress distributions which arise because of the cutout. The structure without a cutout is called herein the basic structure. The stress distribution which would exist in this structure is called herein the basic stress distribution. In the present report the basic stress distribution is assumed to be known. Then the problem of analyzing a structure with a cutout consists of the determination of the perturbation stress distributions to be superposed on the basic stresses in such a manner as to annihilate the effects of that portion of the basic structure which lies within the boundaries of the cutout. Finding the proper magnitudes of these perturbation stresses involves the solution of a system of simultaneous algebraic equations.

At the cutout boundary in the structure with the cutout, two conditions must be satisfied: (a) the stringer load must be zero at points where a stringer is interrupted by the cutout and (b) no external shear forces may act on portions of stringers and rings which border the cutout. By superposing concentrated and shear perturbation loads on the basic structure, the resultant stresses can be made to satisfy these conditions.

The method of analysis is as follows:

(1) Find the stress distribution for the basic structure, that is, the cylinder without a cutout.

(2) Place perturbation loads on the basic structure in the following manner: At each point where a stringer would be interrupted by the cutout, place a concentrated perturbation load; and, about each shear panel which would be removed by the cutout, place a shear perturbation load. For the case of a cutout removing three shear panels and interrupting two stringers, these perturbation loads are shown in figure 4.

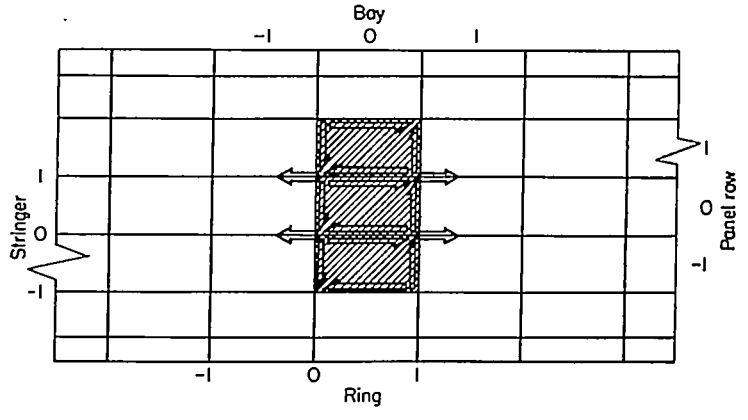

FIGURE 4.—Application of perturbation loads.

(3) With the use of the tables of coefficients, write a set of simultaneous algebraic equations which state the following conditions:

(a) At the points where a stringer is to be interrupted by the cutout boundary, the resultant stringer load must vanish when the boundary is approached from the structure outside of the cutout. This resultant stringer load is composed of the basic stringer load plus the stringer load due to all the perturbation loads.

(b) In each shear panel which is to be removed by the cutout, the basic shear flow plus the shear flow due to all the perturbation loads must be equal to the shear perturbation load applied to the portions of stringers and rings which border that given panel. Thus, the shear flow exerted by the shear panel on the portions of stringers and rings bordering it will exactly cancel the shear perturbation load applied to those same portions of stringers and rings.

(4) Solve the system of equations from step (3) for the magnitudes of the perturbation loads, and superpose the stress distributions due to these loads on the basic distribution. This procedure yields the stress distribution in the structure with cutout.

Upon completion of these four steps, the magnitudes of the perturbation loads on the basic structure have been adjusted so that simultaneous removal of that portion of the basic structure which lies within the cutout boundary and the perturbation loads themselves would not disturb the remainder of the structure. The perturbation loads are in equilibrium with the portion of the basic structure lying within the cutout boundary. The stresses outside the cutout boundary in the basic structure subjected to the actual external loading together with the perturbation loads are precisely the same as the stresses in the structure with the cutout subjected to the external loading alone.

Conditions 3 (a) and 3 (b) can be expressed mathematically by the following equations, respectively:

$$\sum_{\xi}\sum_{\eta}P_{\xi\eta}p_{ij}(\xi,\eta)+\sum_{\xi}\sum_{\eta}Q_{\xi\eta}p_{ij}[\xi,\eta]+\bar{p}_{ij}=0 \qquad (1)$$

$$\sum_{\xi}\sum_{\eta}P_{\xi\eta}q_{ij}(\xi,\eta)+\sum_{\xi}\sum_{\eta}Q_{\xi\eta}q_{ij}[\xi,\eta]+\bar{q}_{ij}=Q_{ij} \qquad (2)$$

The unknowns are $P_{\xi\eta}$, the magnitude of the concentrated perturbation load on stringer η at ring ξ, and $Q_{\xi\eta}$, the magnitude of the shear perturbation load about shear panel (ξ,η). The coefficients $p_{ij}(\xi,\eta)$ and $q_{ij}(\xi,\eta)$ are found in part (a) of the tables and the coefficients $p_{ij}[\xi,\eta]$ and $q_{ij}[\xi,\eta]$ are found in part (c). The summations in each case are extended over the appropriate perturbation loads. Equation (1) is written for each i,j where a stringer is to be interrupted by the cutout and refers in each case to the stringer load as the point i,j is approached from within that portion of the structure lying outside the cutout boundary. Equation (2) is written for each i,j where a shear panel is to be removed by the cutout. The form of equations (1) and (2) is the same regardless of whether the rings in the cylinder are considered rigid or flexible.

This method of analysis may be applied to a cylinder having a cutout more than 1 bay long, but, in such a situation, the effects of removing ring segments from the region within the cutout boundary are neglected. In the rigid-ring case, such effects do not exist if the cut rings remain effectively rigid; in the flexible-ring case, the effects of cutting a ring could, in principle, be taken into account through the introduction of additional types of perturbation loads. It is possible that even with flexible rings the effects of cutting a ring are negligible in certain cases, but this would have to be verified by further investigation.

Sample calculation.—In order to illustrate the method of calculation, the cylinder shown in figure 5 is analyzed. A cutout which removes three shear panels and interrupts two stringers is located in the central bay. The properties of the cylinder are taken as follows:

$$m=36$$

$$A=0.260 \text{ sq in.}$$

$$R=15 \text{ in.}$$

$$L=12 \text{ in.}$$

$$t=0.051 \text{ in.}$$

$$b=R\frac{2\pi}{36}=2.62 \text{ in.}$$

$$t'=\frac{0.260}{2.62}=0.0992$$

For the purposes of this example suppose the rings are very heavy and can be considered rigid in bending in their own planes. From these properties the structural parameters B and C are calculated. The table corresponding to the values of B and C closest to the computed values will be used. If E is taken as 10.6×10^6 psi and G is taken as 4×10^6 psi, the parameters B and C are

$$B=\left(\frac{10.6}{4}\right)\left(\frac{0.0992}{0.051}\right)\left(\frac{15}{12}\right)^2=8.05$$

$$C=0$$

Suppose that the cylinder is loaded with the bending moment M_1 and torque M_2 shown in figure 5. The perturbation load system for this problem is shown in figure 4. The concentrated perturbation loads are doubly symmetric about the cutout. The shear perturbation loads are symmetric about panel row $j=0$. Let P represent the magnitude of each of the concentrated perturbation loads. Let Q_0 represent the magnitude of the shear perturbation load about shear panel (0,0); and let Q_1 represent the magnitude of the shear perturbation loads about shear panels (0,1) and (0,−1).

Equations (1) and (2) are now written for this example by use of the tables of coefficients for $B=8$ and $C=0$. Equation (1) for the stringer load condition in stringer $j=1$ at ring $i=1$ is written with the aid of tables 1 (a) and 1 (c) as follows:

$$-0.5000P+0.0476P+0.0895P+0.1192Q_1L-0.1192Q_0L-0.0374Q_1L+\bar{p}_{11}=0$$

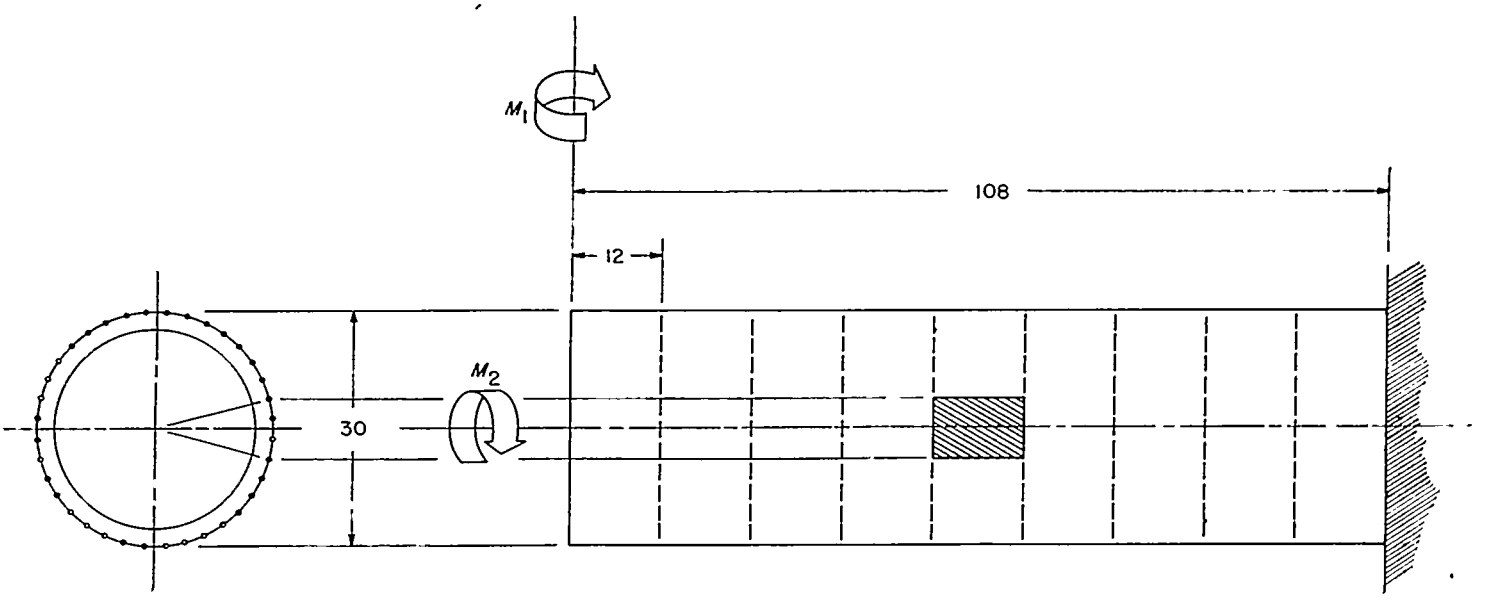

FIGURE 5.—Circular cylinder with cutout used in sample calculation.

where $\bar{p}_{11}$ is the basic stringer load in stringer $j=1$ at station $i=1$. Because of symmetry, similar equations result when equation (1) is written for stringer $j=1$ at ring $i=0$ or for stringer $j=0$ at rings $i=0$ or $i=1$. Equation (2) for shear panel (0,0) is

$$-0.2262\frac{P}{L}+0.2262\frac{P}{L}-0.2262\frac{P}{L}+0.2262\frac{P}{L}+0.6986Q_0-2(0.0629)Q_1+\bar{q}_{00}=Q_0$$

where $\bar{q}_{00}$ is the basic shear flow in shear panel (0,0). For shear panels (0,1) and (0,−1), equation (2) gives

$$-0.2262\frac{P}{L}+0.2262\frac{P}{L}-0.1368\frac{P}{L}+0.1368\frac{P}{L}+0.6986Q_1-0.0629Q_0+0.0119Q_1+\bar{q}_{01}=Q_1$$

where $\bar{q}_{01}$ is the basic shear flow in shear panel (0,1). These three equations in the three unknowns P, Q_0, and Q_1 become

$$\left.\begin{aligned}0.3629P+0.1192Q_0L-0.0818Q_1L&=\bar{p}_{11}\\0.3014Q_0L+0.1258Q_1L&=\bar{q}_{00}L\\0.0629Q_0L+0.2895Q_1L&=\bar{q}_{01}L\end{aligned}\right\}\qquad(3)$$

For simplicity, let $M_1=M_2=100{,}000$ lb-in. In the present example, the basic stress distribution can be found from elementary beam and torsion theories which give $\bar{p}_{11}=370$ pounds and $\bar{q}_{00}=\bar{q}_{01}=70.8$ lb/in. When these constants are introduced into the system of equations (3), the solution is

$$P=1{,}020\text{ lb}$$
$$Q_0L=1{,}750\text{ lb}$$
$$Q_1L=2{,}560\text{ lb}$$

Stringer loads and shear flows in the neighborhood of the cutout are obtained by superposing the effects of these perturbation loads on the basic stress distribution. For example, with the use of tables 1 (a) and 1 (c) the stringer load at the intersection of ring $i=0$ and stringer $j=2$ is given by

$$P(0.0895+0.0511)+Q_1L(0.1192+0.0125)+Q_0L(0.0374)+\bar{p}_{02}=545+\bar{p}_{02}$$

The basic stringer load $\bar{p}_{02}$ equals 358 pounds. Therefore, the load in stringer $j=2$ at ring $i=0$ is 903 pounds. Other stringer loads at ring $i=0$ are shown in figure 6(a). The shear flow in shear panel (−1,1) is given by

$$\frac{1}{L}[P(0.2262+0.1368+0.0044-0.0360)+Q_1L(0.1357-0.0159)+Q_0L(0.0097)]+\bar{q}_{-1,1}=55.1+\bar{q}_{-1,1}$$

The basic shear flow $\bar{q}_{-1,1}$ equals 70.8 lb/in. Thus, the shear flow in panel (−1,1) is 125.9 lb/in. Other shear flows in bay $i=-1$ are shown in figure 6 (b), and in figure 6 (c) are presented shear flows in the net section (bay $i=0$).

STRUCTURE WITH REINFORCEMENT ABOUT CUTOUT

Shear reinforcement.—The method of analysis is easily extended to problems where shear panels are reinforced in the neighborhood of the cutout. Suppose that some of the shear panels around the cutout are reinforced by the addition of a certain thickness of sheet (i. e., a doubler plate). Then, the procedure consists of adding shear perturbation loads to each of these shear panels in the basic structure. On the doubler plates is placed the same shear perturbation load except with opposite sign. Then, for each reinforced shear panel, an equation is written which states the requirement that the shear stress in the shear panel of the basic structure shall equal the shear stress in the doubler plate used to reinforce that panel. When this condition is satisfied, the loaded doubler plates can conceptually be inserted into the basic structure without disturbing continuity. The shear perturbation loads on the doubler plates cancel the shear perturbation loads on the basic structure.

As an example, consider for simplicity the cylinder shown in figure 5 loaded only with bending moment M_1. The most highly loaded shear panels are those indicated by the vertical

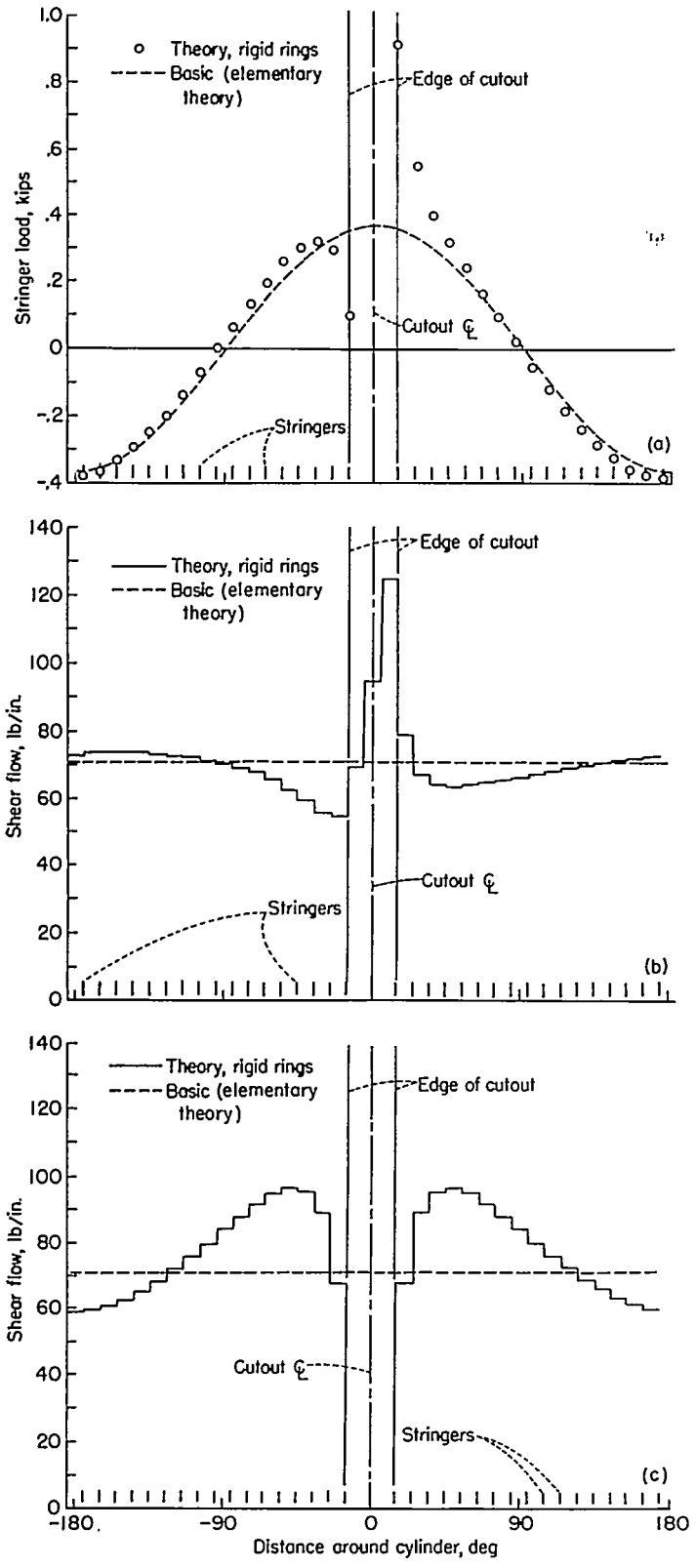

(a) Stringer loads at ring bordering cutout (ring $i=0$).
(b) Shear flow in bay adjacent to cutout (bay $i=-1$).
(c) Shear flow in net section (bay $i=0$).

FIGURE 6.—Results of sample calculation.

hatching in figure 7. Suppose, now, that these shear panels are reinforced by the addition of plates of thickness t^* to the skin of thickness t so that the total thickness in these shear panels is $t+t^*$. The perturbation load system to be placed on the basic structure is shown in figure 8. The four doubler plates of thickness t^* are shown as free bodies in figure 8. The shear perturbation loads applied to them are of the same magnitude as those applied to the basic portions of the reinforced shear panels, but are opposite in sign. The conditions that must be satisfied are:

(a) The stringer load is zero in stringers $j=0$ and $j=1$ at rings $i=0$ and $i=1$ as each of these points is approached from the structure outside of the cutout.

(b) The shear flow in shear panels (0,−1), (0,0), and (0,1) cancels any shear perturbation load applied about these panels. (In this example, no shear is developed in the shear panels of bay $i=0$ and this condition is automatically satisfied.)

(c) The shear stress in each of the shear panels (1,1), (1,−1), (−1,1), and (−1,−1) in the basic structure must equal the shear stress in the corresponding doubler plate.

Condition (a), which must hold where stringers $j=0$ and $j=1$ are interrupted by the cutout, is expressed by a single equation because of symmetry:

$$(-0.5000+0.0476+0.0895)P+(-0.1192-0.0374+0.0067-0.0118)QL+\bar{p}_{11}=0$$

where P and Q are the magnitudes of the concentrated and shear perturbation loads, respectively, and $\bar{p}_{11}$ is the basic stringer load. The condition in shear panel (1,1) that the shear stress in the basic portion of the sheet equals the shear stress in the doubler plate (condition (c)) is expressed as

$$\left[(-0.2262-0.1368-0.0044+0.0360)\frac{P}{L}+(0.6986-0.0119-0.0068+0.0052)Q\right]\frac{1}{t}=-Q\frac{1}{t^*}$$

where t is the thickness of the basic portion of the shear panel and t^* is the thickness of the doubler plate. Because of symmetry, the same equation expresses condition (c) for the other three reinforced shear panels. These equations become

$$0.3629P+0.1617QL=\bar{p}_{11}$$

$$-0.3314P+\left(\frac{t}{t^*}+0.6851\right)QL=0$$

For a given value of t/t^* and for a given magnitude of M_1 (so that $\bar{p}_{11}$ can be computed), this system of equations can be solved for P and Q, and the stress distributions due to these perturbation loads can then be superposed on the basic stress distribution to give the stresses about the cutout.

Stringer reinforcement.—The method of analysis is also easily extended to problems where stringers are reinforced in the neighborhood of the cutout. For example, suppose the coaming stringers in the structure shown in figure 5 have reinforcement of constant cross-sectional area extending 1 bay on either side of the cutout. This coaming-stringer reinforcement is illustrated in figure 9. Let the area of the added reinforcing portion of a coaming stringer be A^* so that the total area of the reinforced portion of the stringer is $A+A^*$. It is assumed that the stringer load is abruptly transmitted into the added portion of the reinforced coaming stringer so that the stress is always given by the force divided by the cross-sectional area.

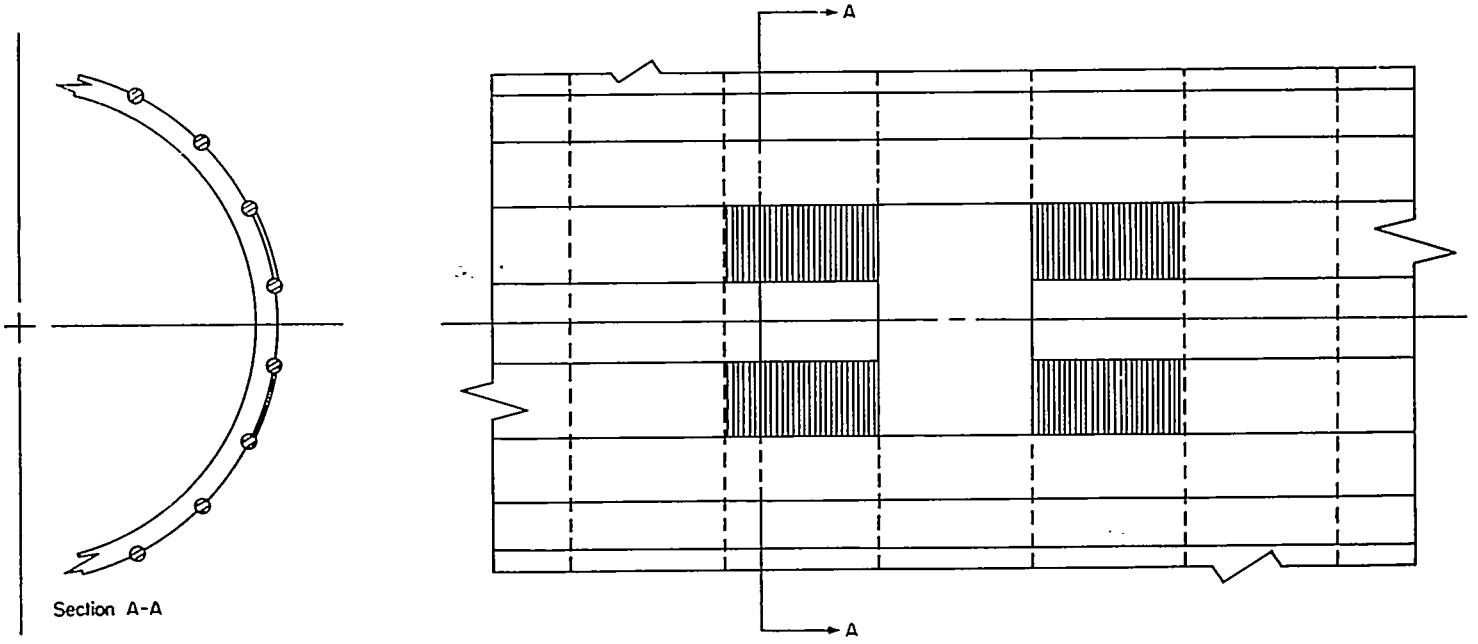

FIGURE 7.—Cutout with shear reinforcement.

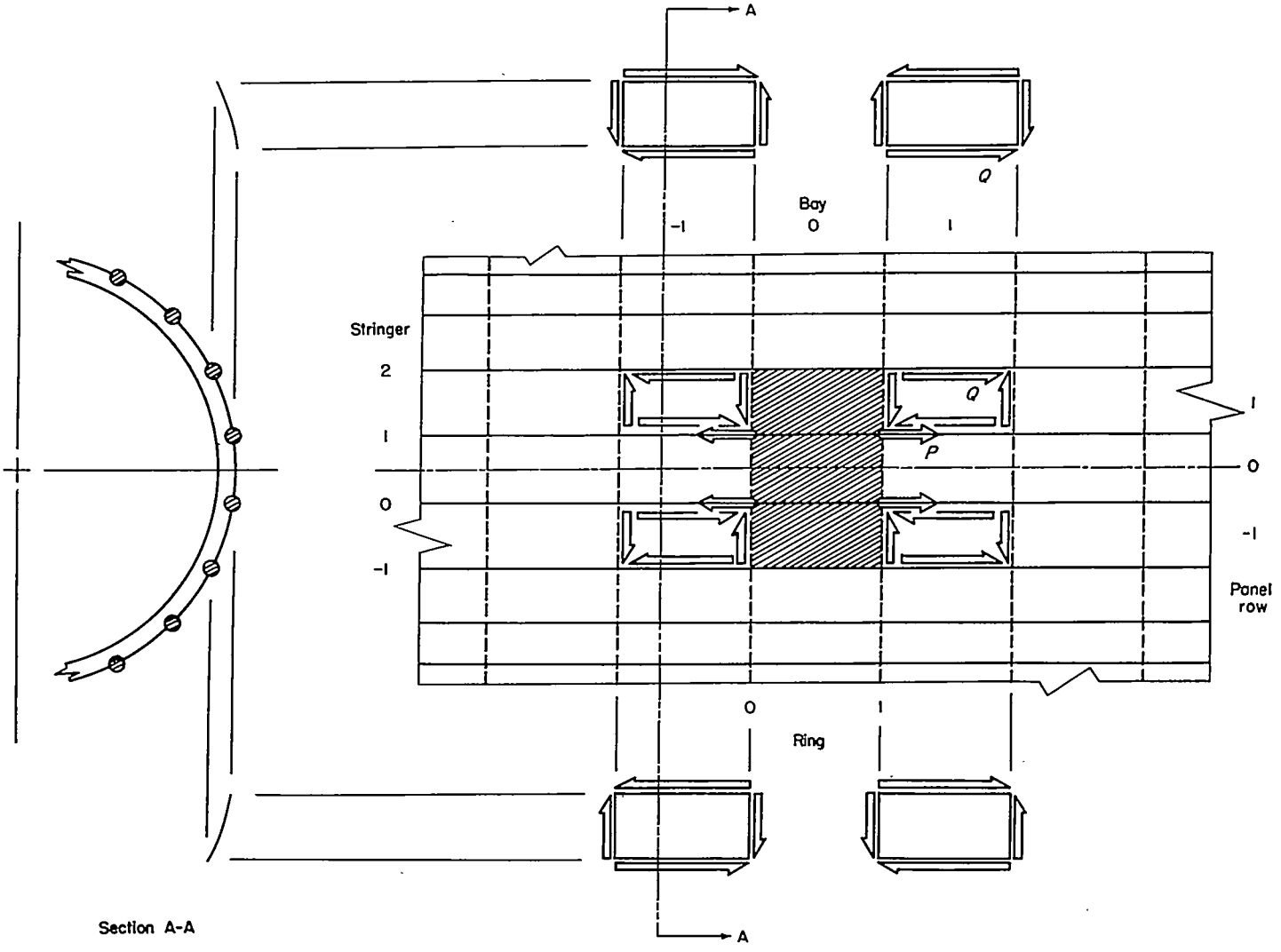

FIGURE 8.—Perturbation load system for a problem of shear reinforcement.

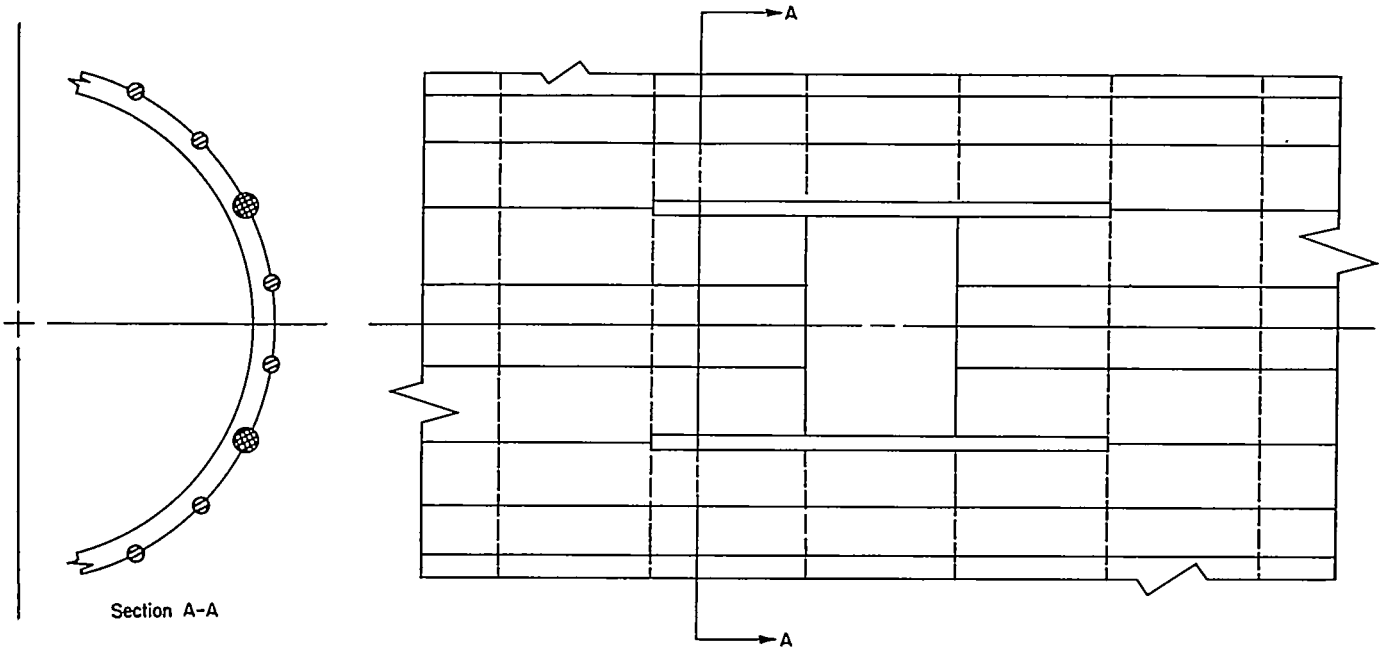

FIGURE 9.—Cutout with reinforced coaming stringers.

Again for simplicity suppose that the cylinder is loaded only by the bending moment M_1 shown in figure 5. The perturbation load system to be placed on the basic structure is shown in figure 10. The added reinforcing portions of the coaming stringers are shown as free bodies in figure 10 with the proper perturbation loads applied to them. The conditions that must be satisfied are:

(a) The stringer load is zero in stringers $j=0$ and $j=1$ at rings $i=0$ and $i=1$ as each of these points is approached from the structure outside of the cutout.

(b) The shear flow in shear panels (0,−1), (0,0), and (0,1) cancels any shear perturbation load applied about these shear panels. (This condition is automatically satisfied in this example.)

(c) The stress in the basic portions of the coaming stringers $j=-1$ and $j=2$ equals the stress in the added reinforcing portions at rings $i=0$ and $i=1$.

(d) In the basic portions of the coaming stringers $j=-1$ and $j=2$ at rings $i=-1$ and $i=2$, when these points are approached from the side which is reinforced, the stress equals the stress at the ends of the added reinforcing portions of the coaming stringers.

Because of the symmetry in this structure, only three equations are required. The unknowns are P_1 and P_2, the magnitudes of the concentrated perturbation loads, and S, the magnitude of the distributed perturbation loads. Condition (a), which must hold where stringer $j=1$ is interrupted by the cutout, is expressed with the use of tables 1(a) and 1(b) as follows:

$$(-0.5000+0.0476+0.0895)P_1+(-0.0895-0.0511-0.0490-0{:}0475)P_2+(-0.0727-0.0340-0.0629-0.0499)S+\bar{p}_{11}=0$$

The condition that the stringer stress in the basic portion of stringer $j=2$ equals the stress in the added reinforcing portion at ring $i=1$ (condition (c)) is expressed as

$$[(0.0895+0.0511)P_1+(-0.0476-0.0330-0.0565-0.0402)P_2+(-0.1924-0.0195-0.0567-0.0379)S+\bar{p}_{12}]\frac{1}{A}=(P_2+S)\frac{1}{A^*}$$

Finally, the condition that the stress in the basic portion of stringer $j=2$, as the ring $i=2$ is approached from the reinforced side, equals the stress at the ends of the added reinforcing member (condition (d)) is expressed as follows:

$$[(-0.5000-0.0459-0.0394)P_2+(0.1924+0.0195-0.0499-0.0398)S+(-0.0895-0.0511+0.0490+0.0475)P_1+\bar{p}_{22}]\frac{1}{A}=\frac{P_2}{A^*}$$

These three equations become

$$0.3629P_1+0.2371P_2+0.2195S=\bar{p}_{11}$$

$$-0.1406P_1+\left(\frac{A}{A^*}+0.1773\right)P_2+\left(\frac{A}{A^*}+0.3065\right)S=\bar{p}_{12}$$

$$0.0441P_1+\left(\frac{A}{A^*}+0.5853\right)P_2-0.1222S=\bar{p}_{22}$$

When A/A^* is known and the magnitude of the external moment M_1 is known so that the basic stringer loads $\bar{p}_{11}$, $\bar{p}_{12}$, and $\bar{p}_{22}$ can be computed, this system of equations can be solved for the unknowns P_1, P_2, and S. Superposition of the stresses due to these perturbation loads on the basic stress distribution yields the stresses about the cutout.

In this example the basic stringer loads do not vary in the longitudinal direction, and the concentrated and distributed perturbation loads can be applied in pairs, equal in magnitude and opposite in sign, as shown in figure 10. However, in cases where the basic stringer loads do vary longitudinally, for example, when the shell is loaded in shear and bending, the concentrated and distributed perturbation loads may not occur in equal and opposite pairs. Furthermore, additional distributed perturbation loads may be necessary on the coaming stringers in bay $i=0$. If such is the case, the stress conditions which were used in the example no longer provide a sufficient number of equations to determine the magnitudes of the perturbation loads. The required

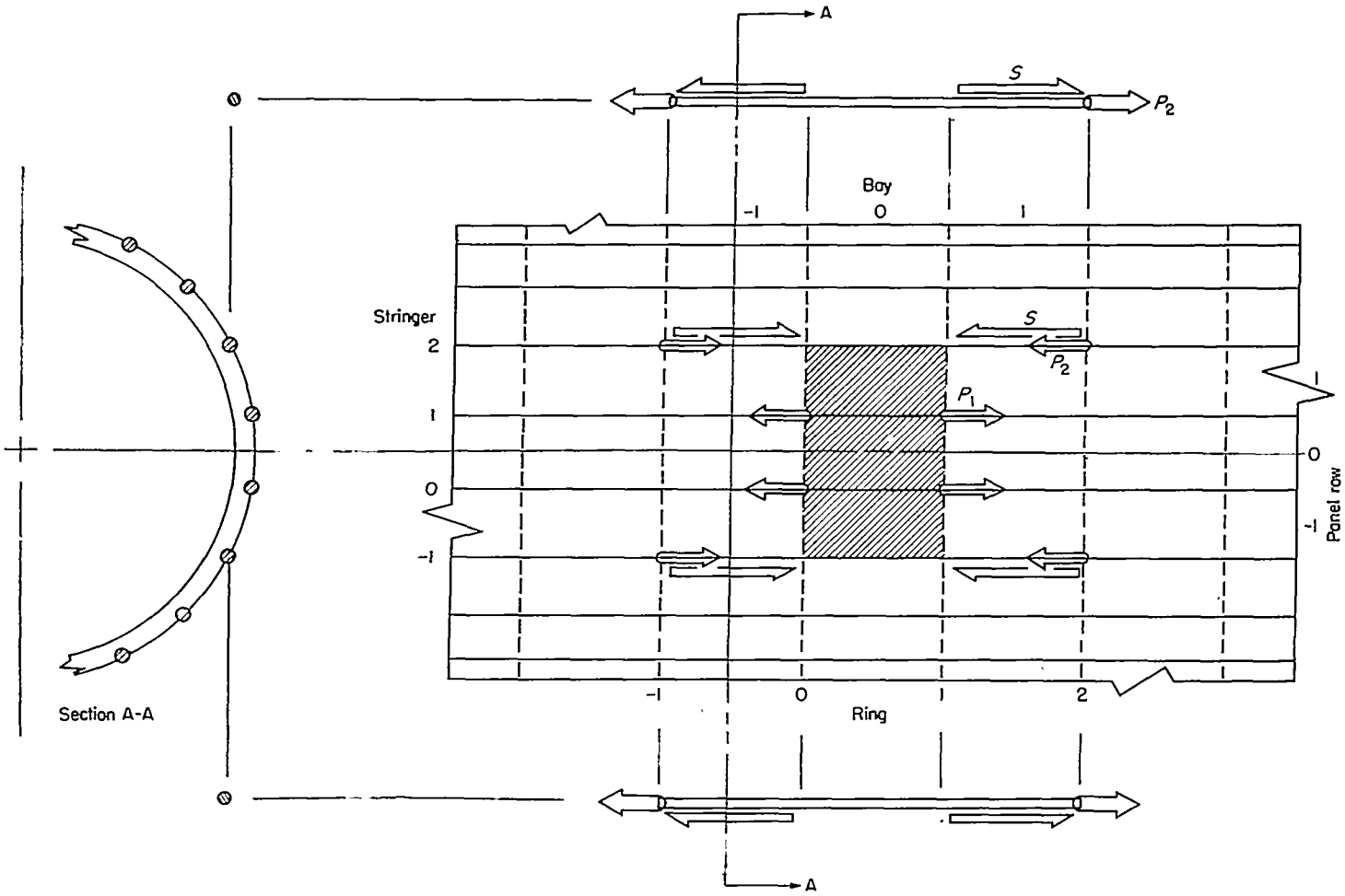

FIGURE 10.—Perturbation load system for a problem of coaming-stringer reinforcement.

supplementary equations are found from the conditions of equilibrium obtained when the added reinforcing portions of the coaming stringers are considered as free bodies.

Comparison of results for reinforced and unreinforced structures.—Some calculated results for the problems of cutouts with reinforcement just discussed are compared with the results for the structure without reinforcement in the following tables:

Intersection of ring and stringer	Stringer load, lb, for—		
	Structure without reinforcement	Structure with reinforced coaming stringers, $A^*=A$	Structure with shear reinforcement, $t^*=t$
(1, 2)	501	758	507
(1, 3)	422	331	422
(1, 4)	359	296	359
(1, 5)	303	258	302
(1, 6)	244	209	242

Shear panel	Shear flow, lb/in., for—		
	Structure without reinforcement	Structure with reinforced coaming stringers, $A^*=A$	Structure with shear reinforcement, $t^*=t$
(1, 0)	0	0	0
(1, 1)	−28.1	−27.3	−30.6
(1, 2)	−12.3	−.3	−13.3
(1, 3)	−5.6	.4	−5.8
(1, 4)	−2.5	.5	−2.3

The reinforced shear panels were assumed to have sheet twice as thick as the uniform sheet; the reinforced portions of the coaming stringers were taken to have twice the area of the uniform stringers. The applied bending moment M_1 was taken as 100,000 lb-in.

The following comparison is noted for these illustrative examples: In the case of coaming-stringer reinforcement, the maximum stringer load is increased, but the maximum stringer stress is decreased (because stringer area is doubled), and the maximum shear flow is not appreciably changed. In the case of shear reinforcement, the maximum shear flow is increased only slightly so that maximum shear stress is considerably reduced, and stringer loads are not appreciably affected.

II—DERIVATION OF PERTURBATION SOLUTIONS

ANALYTICAL APPROACH

Equations for the stress distributions arising from the three perturbation loads illustrated in figure 3 are derived in this part of the report. The perturbation solutions are obtained by use of the principle of minimum complementary energy. This principle states that, among all possible stress distributions in the structure which satisfy equilibrium and the boundary conditions on stress, the distribution that most nearly satisfies compatibility is the one which minimizes the complementary energy π^* where

$$\pi^*=\text{Internal energy}-\left(\begin{array}{l}\text{Work done by surface stresses}\\ \text{acting through the prescribed}\\ \text{surface displacements}\end{array}\right) \quad (4)$$

Since displacements are not prescribed anywhere on the structure, the second term on the right-hand side of equation (4) is omitted. The complementary energy becomes the internal energy or stress energy of the structure.

In writing the equation for the stress energy, the following factors are considered: the energy of axial distortion of the stringers, the shear energy in the sheet, and the bending energy of the rings in their own planes. Each of the perturbation loads is shown in its positive sense in figure 3. Stringer loads are taken as positive in tension. Shear flows are positive as shown in figure 11. Ring bending moments, shear, and thrusts are placed on the ring element in figure 11 in the positive sense. The stress energy in the structure can be expressed as

$$U=\sum_{i=-\infty}^{\infty}\sum_{j=0}^{m-1}\left[\frac{L}{6AE}(p_{ij}^2+p_{ij}p_{i+1,j}+p_{i+1,j}^2)+\frac{R\delta L}{2Gt}q_{ij}^2\right]+\sum_{i=-\infty}^{\infty}\int_0^{2\pi}\frac{R}{2EI}M^2(i,\phi)d\phi \tag{5}$$

where the integration over the length of a stringer between adjacent rings has been carried out.

In the analysis to follow, stringer loads are expressed in the form of a finite trigonometric series. Then, by using the equations of statics, the shear flows and ring bending moments are written in terms of the coefficients of this trigonometric series. The expression for stress energy, equation (5), is minimized with respect to the coefficients of the trigonometric series for stringer loads; then, the expressions for the stringer loads, shear flows, and ring bending moments are substituted into the resulting equation. This process yields a fourth-order finite-difference equation which can be solved for these trigonometric coefficients. The solution is then substituted back into the original expressions for stringer loads, shear flows, and ring moments to yield the desired distributions.

For convenience in application, the significant equations are collected in appendix A.

PERTURBATION LOAD SOLUTIONS

CONCENTRATED PERTURBATION LOAD

Expression for stringer loads.—The concentrated perturbation load is shown in figure 3 (a); let P represent the magnitude of this load. Since the structure is uniform and infinitely long, half of the load goes into the portion of the structure to the right of the ring where the load is applied (ring $i=0$), and half goes to the left of this ring. Therefore, it can be seen from figure 3 (a) that, because of symmetry,

$$\left.\begin{aligned} p_{ij}&=-p_{-i,j} && (i\geqq 1)\\ q_{ij}&=q_{-i-1,j} && (i\geqq 0)\\ M(i,\phi)&=-M(-i,\phi) && (i\geqq 0)\end{aligned}\right\} \tag{6}$$

Consider the right half of the structure, including the ring at $i=0$. The concentrated perturbation load gives rise to stringer loads which are circumferentially symmetric about stringer $j=0$ (see fig. 3 (a)). Thus the stringer load distribution can be represented by a series of the form

$$p_{ij}=\sum_{n=0}^{\frac{m}{2}\text{ or }\frac{m-1}{2}} f_n(i)\cos nj\delta \tag{7}$$

where the notation $\sum_{n=0}^{\frac{m}{2}\text{ or }\frac{m-1}{2}}$ means that the summation is

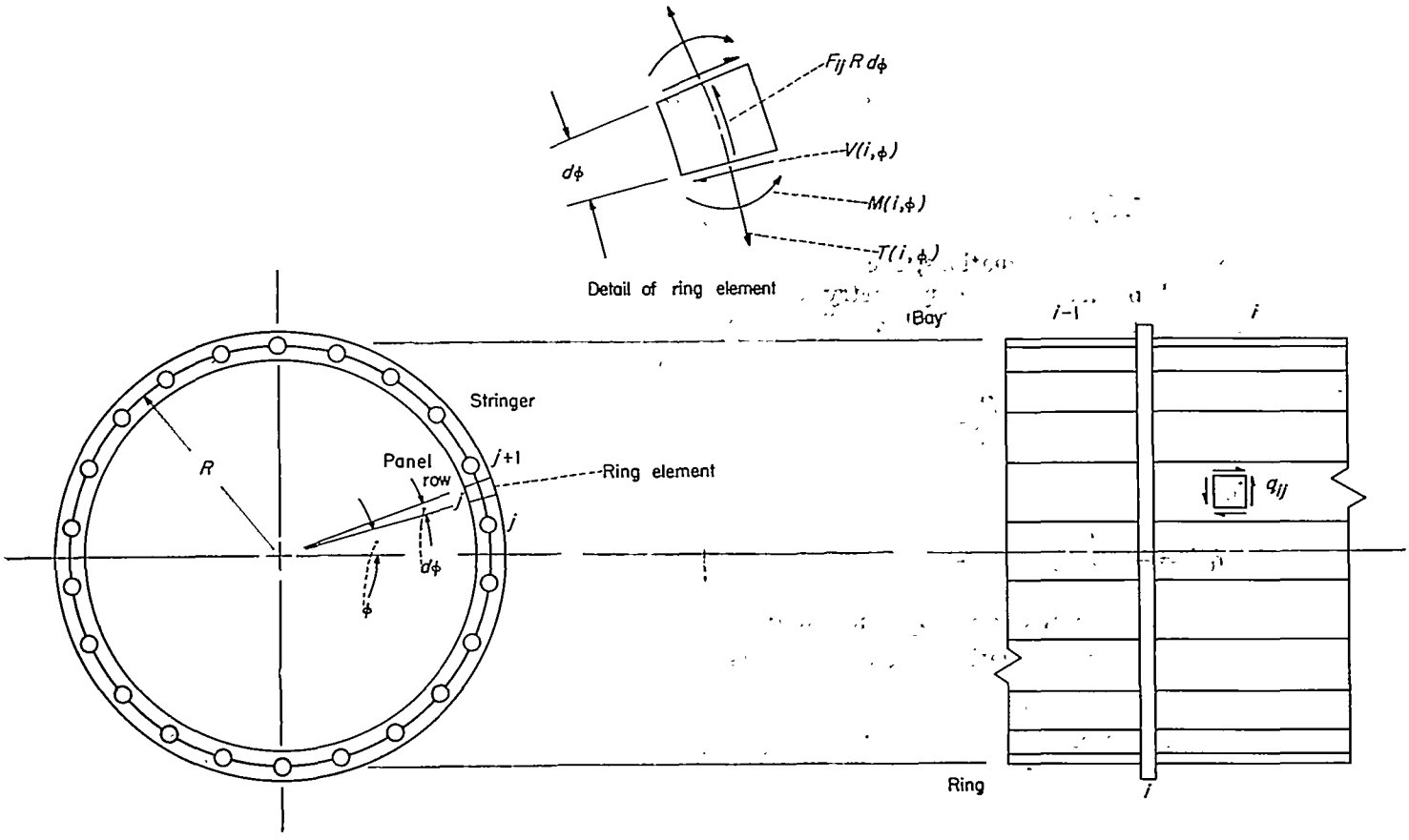

FIGURE 11.—Positive sense of quantities used in analysis.

carried over n from $n=0$ to $n=\frac{m}{2}$ if m is even and to $n=\frac{m-1}{2}$ if m is odd.

Evaluation of $f_0(i)$, $f_1(i)$, and $f_n(0)$.—Suppose that equation (7) is multiplied by $\cos lj\delta$ and summed over j from 0 to $m-1$. This procedure yields

$$\sum_{j=0}^{m-1} p_{ij} \cos lj\delta = \sum_{n=0}^{\frac{m}{2} \text{ or } \frac{m-1}{2}} f_n(i) \sum_{j=0}^{m-1} \cos nj\delta \cos lj\delta$$

The sum over j on the right-hand side is, for $0 \leqq n \leqq \frac{m}{2}$ and $0 \leqq l \leqq \frac{m}{2}$,

$$\sum_{j=0}^{m-1} \cos nj\delta \cos lj\delta = 0 \qquad (l \neq n)$$

$$= \frac{m}{2}\left(1+\delta_{n0}+\delta_{n,\frac{m}{2}}\right) \qquad (l=n)$$

Thus the coefficients of the trigonometric series in equation (7) are

$$f_n(i) = \frac{2}{m\left(1+\delta_{n0}+\delta_{n,\frac{m}{2}}\right)} \sum_{j=0}^{m-1} p_{ij} \cos nj\delta \tag{8}$$

It is desirable first of all to determine those values of $f_n(i)$ which can be found from consideration of the boundary conditions and of the overall equilibrium of the cylinder. Consider the equations of statics for the cylinder as a whole. Satisfaction of equilibrium in the longitudinal direction requires that the sum of the stringer loads at any ring station i must equal one-half of the applied load P. This condition is expressed as

$$\sum_{j=0}^{m-1} p_{ij} = \frac{P}{2}$$

For $n=0$, equation (8) gives

$$f_0(i) = \frac{1}{m} \sum_{j=0}^{m-1} p_{ij} = \frac{P}{2m} \tag{9}$$

Moment equilibrium gives two equations, one of which is automatically satisfied because of the symmetry of the stringer load distribution around the cylinder. The other moment equation is

$$\sum_{j=0}^{m-1} p_{ij} R \cos j\delta = \frac{PR}{2}$$

For $n=1$, equation (8) is

$$f_1(i) = \frac{2}{m} \sum_{j=0}^{m-1} p_{ij} \cos j\delta = \frac{P}{m} \tag{10}$$

On substituting the values of $f_0(i)$ and $f_1(i)$ given in equations (9) and (10), respectively, into equation (7), there results

$$p_{ij} = \frac{P}{2m} + \frac{P}{m} \cos j\delta + \sum_{n=2}^{\frac{m}{2} \text{ or } \frac{m-1}{2}} f_n(i) \cos nj\delta \tag{11}$$

Consider now the boundary condition at ring $i=0$. The stringer loads here are

$$p_{0j} = \frac{P}{2} \delta_{0j}$$

and substitution of this expression into equation (8) yields

$$f_n(0) = \frac{P}{m\left(1+\delta_{n0}+\delta_{n,\frac{m}{2}}\right)} \qquad \left(0 \leqq n \leqq \frac{m}{2}\right) \tag{12}$$

The equations of equilibrium and the boundary condition at $i=0$ have been used to obtain certain of the coefficients of the trigonometric series for stringer loads. The remainder of the coefficients are found by use of the principle of minimum complementary energy, and this is the next step in the solution.

Expressions for shear flows and ring bending moments.—In order to use the principle of minimum complementary energy, the shear flows and ring bending moments must be found in terms of the trigonometric coefficients $f_n(i)$. Shear flows are determined by the consideration of the equations of statics of a portion of any stringer j between two adjacent rings i and $i+1$. The forces on this free body are shown in sketch (a):

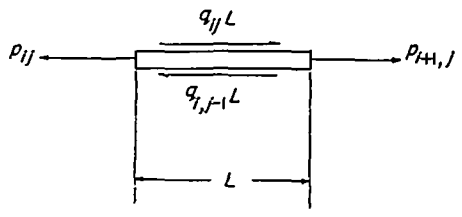

Sketch (a).

Equilibrium of these forces requires that

$$p_{i+1,j} - p_{ij} + (q_{ij} - q_{i,j-1})L = 0 \tag{13}$$

Substitution of equation (11) into equation (13) yields

$$q_{ij} - q_{i,j-1} = -\frac{1}{L} \sum_{n=2}^{\frac{m}{2} \text{ or } \frac{m-1}{2}} [f_n(i+1) - f_n(i)] \cos nj\delta \tag{14}$$

In order to find q_{ij}, replace j with a dummy index k and sum both sides of this equation over k from $k=1$ to $k=j$; that is write

$$\sum_{k=1}^{j} (q_{ik} - q_{i,k-1}) = -\frac{1}{L} \sum_{n=2}^{\frac{m}{2} \text{ or } \frac{m-1}{2}} [f_n(i+1) - f_n(i)] \sum_{k=1} \cos nk\delta$$

When the indicated summations over k have been carried out the following equation is obtained:

$$q_{ij} - q_{i0} = -\frac{1}{L} \sum_{n=2}^{\frac{m}{2} \text{ or } \frac{m-1}{2}} [f_n(i+1) - f_n(i)] \left[\frac{\sin n\left(j+\frac{1}{2}\right)\delta}{2 \sin \frac{n\delta}{2}} - \frac{1}{2}\right]$$

The term q_{i0} can be found from the condition that the total torque on the section is zero. The resulting expression for shear flows is

$$q_{ij}=-\sum_{n=2}^{\frac{m}{2}\text{ or }\frac{m-1}{2}}\frac{f_n(i+1)-f_n(i)}{2L\sin\frac{n\delta}{2}}\sin n\left(j+\frac{1}{2}\right)\delta \tag{15}$$

Bending moments are caused in each ring by a tangential loading which develops because of the difference in shear flow in the sheet on either side of the ring. The tangential load on ring i has the value

$$q_{ij}-q_{i-1,j}=-\sum_{n=2}^{\frac{m}{2}\text{ or }\frac{m-1}{2}}\frac{\Delta_{ii}f_n(i)}{2L\sin\frac{n\delta}{2}}\sin n\left(j+\frac{1}{2}\right)\delta \tag{16}$$

In appendix B, this load is applied to a circular ring and the bending moment in the ring is derived. This procedure results in the following moment in ring i (see eq. (B9)):

$$M(i,\phi)=-\sum_{n=2}^{\frac{m}{2}\text{ or }\frac{m-1}{2}}\frac{R^2m}{2\pi L}\Delta_{ii}f_n(i)H_1(n,\phi) \tag{17}$$

where

$$H_1(n,\phi)=\sum_{r=-\infty}^{\infty}\frac{\cos(rm+n)\phi}{(rm+n)^2[(rm+n)^2-1]}$$

The sign convention for the moment is illustrated in figure 11; the convention for measuring the angle ϕ is shown in figure 12 (a).

Energy analysis.—The stringer loads, shear flows, and ring bending moments have now been expressed in terms of the coefficients $f_n(i)$. The stringer loads are given in equation (11), the shear flows in equation (15), and the bending moments in equation (17). These equations are used in the minimization of the stress energy of the cylinder with respect to $f_n(i)$.

By virtue of the symmetry properties of this problem expressed in equations (6), the energy in the structure to the left of ring $i=0$ is the same as the energy to the right of ring $i=0$. Thus, equation (5) becomes

$$U=2\sum_{i=0}^{\infty}\sum_{j=0}^{m-1}\left[\frac{L}{6AE}(p_{ij}^2+p_{ij}p_{i+1,j}+p_{i+1,j}^2)+\frac{R\delta L}{2Gt}q_{ij}^2\right]+$$
$$2\sum_{i=1}^{\infty}\int_0^{2\pi}\frac{R}{2EI}M^2(i,\phi)d\phi$$

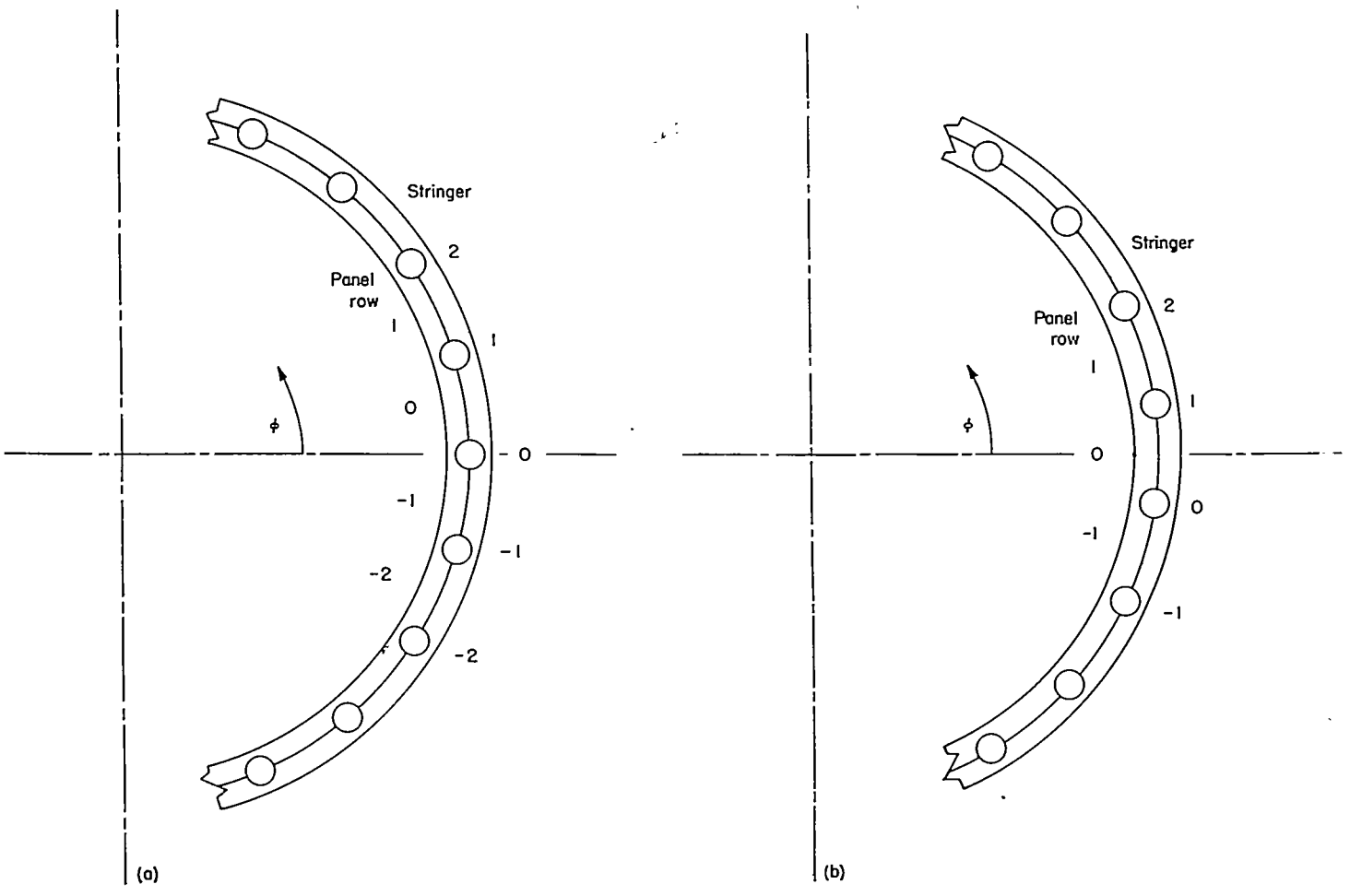

(a) For concentrated and distributed perturbation loads.

(b) For shear perturbation load.

FIGURE 12.—Conventions for angular coordinate ϕ.

Note that $M(0,\phi)$ is identically zero because there is no difference in shear flow across ring $i=0$ and, therefore, no tangential load acts on this ring.

Minimization of the stress energy with respect to $f_n(i)$ results in the following equation:

$$\frac{\partial U}{\partial f_n(i)}=0$$
$$=\sum_{j=0}^{m-1}\left[\frac{L}{6AE}(p_{i+1,j}+4p_{ij}+p_{i-1,j})\frac{\partial p_{ij}}{\partial f_n(i)}+\frac{R\delta L}{Gt}\left(q_{ij}\frac{\partial q_{ij}}{\partial f_n(i)}+q_{i-1,j}\frac{\partial q_{i-1,j}}{\partial f_n(i)}\right)\right]+\int_0^{2\pi}\frac{R}{EI}\left[M(i+1,\phi)\frac{\partial M(i+1,\phi)}{\partial f_n(i)}+M(i,\phi)\frac{\partial M(i,\phi)}{\partial f_n(i)}+M(i-1,\phi)\frac{\partial M(i-1,\phi)}{\partial f_n(i)}\right]d\phi \tag{18}$$

The coefficients $f_0(i)$ and $f_1(i)$ are known already for all values of i, and $f_n(0)$ is known for $0\leqq n\leqq\frac{m}{2}$. Equation (18) therefore needs only to be considered for $i\geqq 1$ and $n\geqq 2$. The expressions for the stringer loads, shear flows, and ring bending moments are substituted into equation (18). Then the following definite sums are needed (these can be obtained by the procedure outlined in ref. 7):

$$\sum_{j=0}^{m-1}\cos nj\delta=0 \qquad (0<n<m) \tag{19}$$

and for the integers n and l restricted to the range $1\leqq n\leqq\frac{m}{2}$ and $1\leqq l\leqq\frac{m}{2}$,

$$\left.\begin{aligned}\sum_{j=0}^{m-1}\cos lj\delta\cos nj\delta&=0 &(l\neq n)\\ &=\frac{m}{2}\left(1+\delta_{n,\frac{m}{2}}\right) &(l=n)\end{aligned}\right\} \tag{20}$$

and

$$\left.\begin{aligned}\sum_{j=0}^{m-1}\sin l\left(j+\frac{1}{2}\right)\delta\sin n\left(j+\frac{1}{2}\right)\delta&=0 &(l\neq n)\\ &=\frac{m}{2}\left(1+\delta_{n,\frac{m}{2}}\right) &(l=n)\end{aligned}\right\} \tag{21}$$

The following definite integral, which is derived in appendix C, is also needed:

$$\left.\begin{aligned}\int_0^{2\pi}H_1(n,\phi)H_1(l,\phi)\,d\phi&=0 &(l\neq n)\\ &=S_n\pi\left(1+\delta_{n,\frac{m}{2}}\right) &(l=n)\end{aligned}\right\} \tag{22}$$

where

$$S_n=\sum_{r=-\infty}^{\infty}D_{rn}^2=\sum_{r=-\infty}^{\infty}\frac{1}{(rm+n)^4[(rm+n)^2-1]^2}$$

and where n and l are restricted to $2\leqq n\leqq\frac{m}{2}$ and $2\leqq l\leqq\frac{m}{2}$.

A closed form of S_n is presented in appendix C but the series form converges so rapidly that it is usually more convenient than the closed form for use in calculations.

After substitution of the expressions for stringer loads, shear flows, and ring moments into equation (18), the use of these definite sums (19), (20), and (21), and definite integral (22) results in the following equations which express the condition of minimum stress energy:

For $i=1$,

$$f_n(3)+2\gamma_n f_n(2)+(2\beta_n-1)f_n(1)+2(\gamma_n+1)f_n(0)=0 \tag{23a}$$

and, for $i\geqq 2$,

$$f_n(i+2)+2\gamma_n f_n(i+1)+2\beta_n f_n(i)+2\gamma_n f_n(i-1)+f_n(i-2)=0 \tag{23b}$$

where

$$\gamma_n=-2+\frac{1-\frac{3}{2}\frac{B\delta^2}{\sin^2\frac{n\delta}{2}}}{12CS_n}$$

$$\beta_n=3+\frac{4+3\frac{B\delta^2}{\sin^2\frac{n\delta}{2}}}{12CS_n}$$

$$B=\frac{E}{G}\frac{t'}{t}\frac{R^2}{L^2}$$

$$C=\frac{t'R^6}{IL^3}$$

Solution of finite-difference equation.—Equation (23b) is a fourth-order finite-difference equation with constant coefficients. (Note that the symbol i represents the index of the rings and bays and should not be confused with the usual notation for $\sqrt{-1}$ which never appears in this report.) Equation (23b) corresponds exactly with equation (24) of reference 8. The general solution is presented on pages 23 to 26 of reference 8 and on pages 28 and 29 of reference 9. It may be written as

$$f_n(i)=(\pm e^{-\psi_n})^i[\alpha_{1n}\Lambda_{1n}(i)+\alpha_{2n}\Lambda_{2n}(i)]+(\pm e^{\psi_n})^i[\alpha_{3n}\Lambda_{1n}(i)+\alpha_{4n}\Lambda_{2n}(i)] \qquad (n\geqq 2) \tag{24}$$

where the upper sign is used when $\gamma_n<0$ and the lower sign when $\gamma_n>0$. The values of Λ are as follows:

For $D_n=\frac{2(\beta_n-1)}{\gamma_n^2}>1$,

$$\Lambda_{1n}(i)=\cos i\chi_n$$

$$\Lambda_{2n}(i)=\sin i\chi_n$$

where

$$\chi_n=\frac{1}{2}\cos^{-1}\left[\frac{\beta_n-1}{2}-\sqrt{\left(\frac{\beta_n+1}{2}\right)^2-\gamma_n^2}\right]$$

For $D_n<1$,

$$\Lambda_{1n}(i)=\cosh i\chi_n$$

$$\Lambda_{2n}(i)=\sinh i\chi_n$$

where

$$\chi_n=\frac{1}{2}\cosh^{-1}\left[\frac{\beta_n-1}{2}-\sqrt{\left(\frac{\beta_n+1}{2}\right)^2-\gamma_n^2}\right]$$

For $D_n=1$,

$$\Lambda_{1n}=1$$

$$\Lambda_{2n}=i$$

In the inverse trigonometric and hyperbolic functions, the principal values are used. The argument ψ_n of the exponential function is given by the positive branch of

$$\psi_n=\frac{1}{2}\cosh^{-1}\left[\frac{\beta_n-1}{2}+\sqrt{\left(\frac{\beta_n+1}{2}\right)^2-\gamma_n^2}\right]$$

At a large longitudinal distance from the applied load, the stringer loads should approach the elementary distribution given by the first two terms of equation (11); consequently, for $n\geqq 2$, $f_n(i)$ approaches zero as i approaches infinity. The first term on the right-hand side of equation (24) satisfies this condition; however, the second term does not and, hence, must be omitted. The solutions, then, that are compatible with the boundary conditions at infinity are:

$$f_n(i)=\zeta_n^i[\alpha_{1n}\Lambda_{1n}(i)+\alpha_{2n}\Lambda_{2n}(i)] \qquad (n\geqq 2) \tag{25}$$

where

$$\zeta_n=\pm e^{-\psi_n}$$

Now the arbitrary constants α_{1n} and α_{2n} are determined. The first, α_{1n}, is obtained immediately. Substitution of $i=0$ into equation (25) and use of equation (12) to evaluate $f_n(0)$ yields

$$f_n(0)=\alpha_{1n}=\frac{P}{m\left(1+\delta_{n,\frac{m}{2}}\right)} \qquad (n\geqq 2) \tag{26}$$

Substitution of equations (26) and (25) into the boundary equation (23a) yields

$$\alpha_{2n}=-\frac{\Theta_{1n}+2(\gamma_n+1)}{\Theta_{2n}}\frac{P}{m\left(1+\delta_{n,\frac{m}{2}}\right)}$$

where

$$\Theta_{sn}=\zeta_n^3\Lambda_{sn}(3)+2\gamma_n\zeta_n^2\Lambda_{sn}(2)+(2\beta_n-1)\zeta_n\Lambda_{sn}(1) \qquad (s=1,2)$$

The solution for the concentrated perturbation load is now complete since the coefficients $f_n(i)$ are completely defined and may be substituted into equation (11) to give the stringer loads. The shear flows can be found from equation (15); however, once the stringer loads are known, it is simpler to calculate the shear flows by the use of the equations of statics. Because of symmetry, the shear flows in shear panels adjacent to stringer $j=0$ are given by

$$q_{i0}=-q_{i,-1}=\frac{p_{i0}-p_{i+1,0}}{2L}$$

All the other shear flows can be found by the use of equation (13). If desired, the moment distribution in the rings can be computed from equation (17) and the thrust and transverse shear in the rings can be found from the formulas given in appendix B.

DISTRIBUTED PERTURBATION LOAD

Expression for stringer loads.—The distributed perturbation load is shown in figure 3 (b); let S represent the magnitude of the total force distributed along stringer $j=0$ between rings $i=0$ and $i=1$. From figure 3 (b) it is seen that

$$p_{ij}=-p_{-i+1,j} \qquad (i\geqq 1) \tag{27a}$$

$$q_{ij}=q_{-i,j} \qquad (i\geqq 1) \tag{27b}$$

$$M(i,\phi)=-M(-i+1,\phi) \qquad (i\geqq 1) \tag{27c}$$

At ring $i=1$ and to the right of this ring, the stringer loads can be represented by a trigonometric series of exactly the same form as equation (7)

$$p_{ij}=\sum_{n=0}^{\frac{m}{2}\text{ or }\frac{m-1}{2}} f_n(i)\cos nj\delta \tag{28}$$

except now $i\geqq 1$, and the coefficients $f_n(i)$ are different from those obtained for the preceding case of the concentrated load.

Evaluation of $f_0(i)$ and $f_1(i)$.—As in the preceding case, the first two coefficients $f_0(i)$ and $f_1(i)$ can be obtained from the equations of statics, and the results are the same as before. Equation (28) becomes

$$p_{ij}=\frac{S}{2m}+\frac{S}{m}\cos j\delta+\sum_{n=2}^{\frac{m}{2}\text{ or }\frac{m-1}{2}} f_n(i)\cos nj\delta \qquad (i\geqq 1) \tag{29}$$

With the concentrated perturbation load, all the coefficients $f_n(0)$ were easily found because the stringer load distribution at ring station $i=0$ was known. Here no such distribution is known. In order to determine the boundary condition at bay $i=0$, the effect of the distributed perturbation load on the equilibrium of portions of stringers in this bay must be investigated.

Expressions for shear flows and ring bending moments.—Away from bay $i=0$ the shear flows and ring bending moments are of the same form as for the concentrated load. The following expression for the shear flows is obtained by use of equation (13):

$$q_{ij}=-\sum_{n=2}^{\frac{m}{2}\text{ or }\frac{m-1}{2}}\frac{f_n(i+1)-f_n(i)}{2L\sin\frac{n\delta}{2}}\sin n\left(j+\frac{1}{2}\right)\delta \qquad (i\geqq 1) \tag{30}$$

The ring bending moments are obtained in appendix B as

$$M(i,\phi)=-\sum_{n=2}^{\frac{m}{2}\text{ or }\frac{m-1}{2}}\frac{R^2m}{2\pi L}\Delta_{ii}f_n(i)H_1(n,\phi)\qquad(i\geqq 2)\quad(31)$$

where

$$H_1(n,\phi)=\sum_{r=-\infty}^{\infty}\frac{\cos(rm+n)\phi}{(rm+n)^2[(rm+n)^2-1]}$$

The applied force in bay $i=0$ may be written as $S\delta_{0j}$. Consider, now, the equilibrium of a portion of any stringer j between ring $i=0$ and ring $i=1$. The forces on this free body are shown in sketch (b):

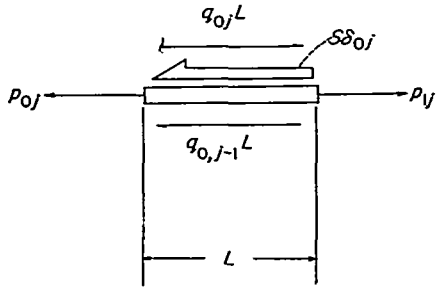

Sketch (b).

Equilibrium of these forces requires that

$$p_{1j}-p_{0j}+(q_{0j}-q_{0,j-1})L-S\delta_{0j}=0$$

Because of the antisymmetry property expressed in equation (27a), the equilibrium equation becomes

$$2p_{1j}+(q_{0j}-q_{0,j-1})L-S\delta_{0j}=0\qquad(32)$$

It is convenient, now, to expand the Kronecker delta δ_{0j} in a finite trigonometric series,

$$\delta_{0j}=\sum_{n=0}^{\frac{m}{2}\text{ or }\frac{m-1}{2}}d_n\cos nj\delta\qquad(33)$$

Multiplying through by $\cos lj\delta$ and summing over j from 0 to $m-1$ yields the trigonometric coefficients d_n. The result is

$$d_n=\frac{2}{m\left(1+\delta_{n0}+\delta_{n,\frac{m}{2}}\right)}\qquad(34)$$

Substitution of the expression for stringer loads (equation (29)) and the trigonometric expansion for δ_{0j} (equation (33)) into the equilibrium equation (32) yields

$$q_{0j}-q_{0,j-1}=\frac{1}{L}\sum_{n=2}^{\frac{m}{2}\text{ or }\frac{m-1}{2}}[Sd_n-2f_n(1)]\cos nj\delta$$

In order to find q_{0j}, this equation can be treated in the same manner as equation (14); that is, replace j by a dummy index k, sum from $k=1$ to $k=j$, and then use the condition that the total torque on a cross section in bay $i=0$ must be zero. This procedure results in the following expression for the shear flows in bay $i=0$:

$$q_{0j}=\sum_{n=2}^{\frac{m}{2}\text{ or }\frac{m-1}{2}}\frac{\frac{1}{2}Sd_n-f_n(1)}{L\sin\frac{n\delta}{2}}\sin n\left(j+\frac{1}{2}\right)\delta\qquad(35)$$

The expression for the bending moment in rings $i=1$ and $i=0$ is yet to be found, as this expression differs from that for the moment in the rest of the rings given in equation (31). The moment in ring $i=0$ is the same in magnitude as that in ring $i=1$ but opposite in sign. The tangential loading on ring $i=1$ is given by

$$q_{1j}-q_{0j}=-\sum_{n=2}^{\frac{m}{2}\text{ or }\frac{m-1}{2}}\frac{f_n(2)-3f_n(1)+Sd_n}{2L\sin\frac{n\delta}{2}}\sin n\left(j+\frac{1}{2}\right)\delta$$

By analogy with equations (16) and (17), then, the bending moment in ring $i=1$ can be written as

$$M(1,\phi)=-\sum_{n=2}^{\frac{m}{2}\text{ or }\frac{m-1}{2}}\frac{R^2m}{2\pi L}[f_n(2)-3f_n(1)+Sd_n]H_1(n,\phi)\qquad(36)$$

All the stringer loads, shear flows, and ring bending moments have now been expressed in terms of the coefficients $f_n(i)$. The stringer loads are given in equation (29), the shear flows in equations (30) and (35), and the ring moments in equations (31) and (36). The next step in the analysis is the substitution of these expressions into the equation obtained from minimization of the stress energy of the cylinder with respect to $f_n(i)$.

Energy analysis.—By virtue of the symmetry properties in this problem given in equations (27), the energy in the structure to the right of bay $i=0$ equals the energy to the left of this bay. Equation (5) for the stress energy can be written

$$U=\sum_{j=0}^{m-1}\left(\frac{L}{6AE}p_{1j}^2+\frac{R\delta L}{2Gt}q_{0j}^2\right)+2\sum_{i=1}^{\infty}\sum_{j=0}^{m-1}\left[\frac{L}{6AE}(p_{ij}^2+p_{ij}p_{i+1,j}+p_{i+1,j}^2)+\frac{R\delta L}{2Gt}q_{ij}^2\right]+2\sum_{i=1}^{\infty}\int_0^{2\pi}\frac{R}{2EI}M^2(i,\phi)d\phi\qquad(37)$$

Minimization of the stress energy with respect to $f_n(i)$ results in the following equations:

$$\frac{\partial U}{\partial f_n(1)}=0=\sum_{j=0}^{m-1}\left[\frac{L}{6AE}(3p_{1j}+p_{2j})\frac{\partial p_{1j}}{\partial f_n(1)}+\frac{R\delta L}{2Gt}\left(2q_{1j}\frac{\partial q_{1j}}{\partial f_n(1)}+q_{0j}\frac{\partial q_{0j}}{\partial f_n(1)}\right)\right]+\int_0^{2\pi}\frac{R}{EI}\left[M(2,\phi)\frac{\partial M(2,\phi)}{\partial f_n(1)}+M(1,\phi)\frac{\partial M(1,\phi)}{\partial f_n(1)}\right]d\phi\qquad(38)$$

and

$$\frac{\partial U}{\partial f_n(i)}=0=\sum_{j=0}^{m-1}\left[\frac{L}{6AE}(p_{i+1,j}+4p_{ij}+p_{i-1,j})\frac{\partial p_{ij}}{\partial f_n(i)}+\frac{R\delta L}{Gt}\left(q_{ij}\frac{\partial q_{ij}}{\partial f_n(i)}+q_{i-1,j}\frac{\partial q_{i-1,j}}{\partial f_n(i)}\right)\right]+\int_0^{2\pi}\frac{R}{EI}\left[M(i+1,\phi)\frac{\partial M(i+1,\phi)}{\partial f_n(i)}+M(i,\phi)\frac{\partial M(i,\phi)}{\partial f_n(i)}+M(i-1,\phi)\frac{\partial M(i-1,\phi)}{\partial f_n(i)}\right]d\phi \qquad (i\geqq 2) \tag{39}$$

Note that equation (39) is the same as equation (18), except that equation (39) is valid only for $i\geqq 2$.

The stringer loads, shear flows, and ring moments are substituted into equations (38) and (39), and then the definite sums and definite integral derived in the preceding section are used to simplify these equations. After simplification, the following equations result:

For $i=1$,

$$f_n(3)+(2\gamma_n-1)f_n(2)+2(\beta_n-\gamma_n)f_n(1)=Sd_n\left(\frac{\beta_n-4\gamma_n-2}{3}\right) \tag{40a}$$

For $i=2$,

$$f_n(4)+2\gamma_n f_n(3)+2\beta_n f_n(2)+(2\gamma_n-1)f_n(1)=-Sd_n \tag{40b}$$

For $i\geqq 3$,

$$f_n(i+2)+2\gamma_n f_n(i+1)+2\beta_n f_n(i)+2\gamma_n f_n(i-1)+f_n(i-2)=0 \tag{40c}$$

Solution of finite-difference equation.—Equation (40c) is the same as equation (23b); therefore, the solution to equation (40c) is

$$f_n(i)=\zeta_n^i[\alpha_{1n}\Lambda_{1n}(i)+\alpha_{2n}\Lambda_{2n}(i)] \quad (n\geqq 2) \tag{41}$$

which is the same as equation (25) except for the values of the arbitrary constants α_{1n} and α_{2n}. These constants are found by the substitution of the solution (41) into equations (40a) and (40b). This procedure yields two simultaneous algebraic equations in α_{1n} and α_{2n}, and their solution gives

$$\alpha_{1n}=\frac{\Gamma_{2n}\dfrac{\beta_n-4\gamma_n-2}{3}+\Omega_{2n}}{\Omega_{1n}\Gamma_{2n}-\Gamma_{1n}\Omega_{2n}}\,\frac{2S}{m\left(1+\delta_{n,\frac{m}{2}}\right)}$$

$$\alpha_{2n}=-\frac{\Omega_{1n}+\Gamma_{1n}\dfrac{\beta_n-4\gamma_n-2}{3}}{\Omega_{1n}\Gamma_{2n}-\Gamma_{1n}\Omega_{2n}}\,\frac{2S}{m\left(1+\delta_{n,\frac{m}{2}}\right)}$$

where d_n, the coefficient in the trigonometric series for the Kronecker delta δ_{0j}, has been replaced by its value as given in equation (34), and where the Ω's and Γ's are given by

$$\Omega_{sn}=\zeta_n^3\Lambda_{sn}(3)+(2\gamma_n-1)\zeta_n^2\Lambda_{sn}(2)+2(\beta_n-\gamma_n)\zeta_n\Lambda_{sn}(1) \qquad (s=1,2) \tag{42a}$$

$$\Gamma_{sn}=\zeta_n^4\Lambda_{sn}(4)+2\gamma_n\zeta_n^3\Lambda_{sn}(3)+2\beta_n\zeta_n^2\Lambda_{sn}(2)+(2\gamma_n-1)\zeta_n\Lambda_{sn}(1) \qquad (s=1,2) \tag{42b}$$

The coefficients $f_n(i)$ are now defined for the distributed perturbation load and may be substituted into equation (29) to give the stringer loads. The shear flows can be found from equations (30) and (35), but, again, once the stringer loads are known, shear flows can easily be found by use of the equations of statics. The shear flow in the panels adjacent to stringer $j=0$ can be found by considering symmetry:

In bay $i=0$

$$q_{00}=-q_{0,-1}=\frac{S-2p_{10}}{2L}$$

and, outside of bay $i=0$,

$$q_{i0}=-q_{i,-1}=\frac{p_{i0}-p_{i+1,0}}{2L} \qquad (i\geqq 1)$$

The other shear flows are found from equation (13), as before. If desired, the ring moments can be obtained from equations (31) and (36) and the ring thrust and transverse shear can be found from the equations given in appendix B.

SHEAR PERTURBATION LOAD

Expression for stringer loads.—The shear perturbation load is shown in figure 3 (c). The magnitude of the load per unit length applied along the stringers and rings bordering shear panel (0,0) will be represented by Q. From figure 3(c) it is seen that the longitudinal symmetry properties in this case are the same as those for the case of the distributed perturbation load given by equation (27).

The shear perturbation load is self-equilibrating and gives rise to stringer loads which are antisymmetric about panel row $j=0$. For $i\geqq 1$, the stringer loads may be represented by

$$p_{ij}=\sum_{n=2}^{\frac{m}{2}\text{ or }\frac{m-1}{2}} f_n(i)\sin n\left(j-\frac{1}{2}\right)\delta \tag{43}$$

where the coefficients $f_n(i)$ are different from those in the two preceding cases. The term corresponding to $n=1$ vanishes because it represents an elementary bending stringer-load distribution, and the shear perturbation load does not require this distribution for overall equilibrium.

Expressions for shear flows and ring bending moments.—None of the coefficients $f_n(i)$ in the trigonometric series (43) can be found from the equations of statics. Furthermore, the boundary condition at bay $i=0$ must be determined from a consideration of the effect that the shear perturbation load

has on the equilibrium of the portions of stringers in bay $i=0$ and on the bending moment in the rings bounding this bay. Thus the energy approach must be used immediately and the first step in this approach is to write the shear flows and ring moments in terms of $f_n(i)$, the coefficients of the trigonometric series for the stringer loads, equation (43).

Outside of bay $i=0$, the satisfaction of the equations of statics for the portions of stringers between adjacent rings yields equation (13), the same as in the two preceding cases. Substituting equation (43) for the stringer loads into the equilibrium equation (13) and following the same procedure used to obtain equation (15) yields the expression for the shear flows due to the shear perturbation load:

$$q_{ij}=\sum_{n=2}^{\frac{m}{2}\text{ or }\frac{m-1}{2}}\frac{f_n(i+1)-f_n(i)}{2L\sin\frac{n\delta}{2}}\cos nj\delta \qquad (i\geqq 1) \qquad (44)$$

The tangential loadings on the rings to the right of ring $i=1$ are

$$q_{ij}-q_{i-1,j}=\sum_{n=2}^{\frac{m}{2}\text{ or }\frac{m-1}{2}}\frac{\Delta_{ii}f_n(i)}{2L\sin\frac{n\delta}{2}}\cos nj\delta$$

In appendix B this load is applied to a circular ring and the following expression for the moment in the ring is obtained (see eq. (B13)):

$$M(i,\phi)=-\sum_{n=2}^{\frac{m}{2}\text{ or }\frac{m-1}{2}}\frac{R^2m}{2\pi L}\Delta_{ii}f_n(i)H_2(n,\phi) \qquad (i\geqq 2) \qquad (45)$$

where

$$H_2(n,\phi)=\sum_{r=-\infty}^{\infty}(-1)^r\frac{\sin(rm+n)\phi}{(rm+n)^2[(rm+n)^2-1]}$$

The convention for measuring the angle ϕ here is a little different than before and is illustrated in figure 12 (b).

Now, the shear flows in bay $i=0$ and the bending moments in the rings bordering bay $i=0$ must be found. Consider the shear flows in this central bay. The shear perturbation loading applied at bay $i=0$ may be written $Q\delta_{0j}$. Then the forces on the portion of any stringer j between ring $i=0$ and ring $i=1$ are as shown in sketch (c):

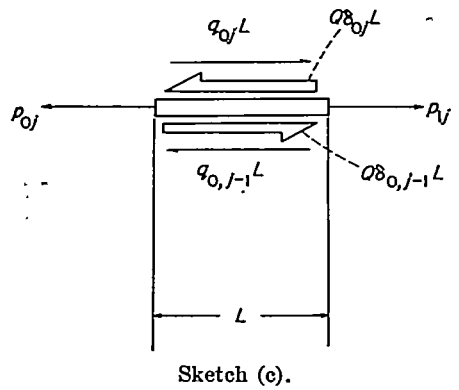

Sketch (c).

Equilibrium of these forces requires that

$$p_{1j}-p_{0j}+(q_{0j}-q_{0,j-1})L+Q(\delta_{0,j-1}-\delta_{0j})L=0$$

Because of the antisymmetry property, equation (27a), the equation of equilibrium becomes

$$2p_{1j}+(q_{0j}-q_{0,j-1})L+Q(\delta_{0,j-1}-\delta_{0j})L=0 \qquad (46)$$

The substitution of the stringer loads (equation (43)) into the equilibrium equation (46), and the introduction of the trigonometric expansion for the Kronecker delta δ_{0j} (equation (33)) yields the following equation:

$$q_{0j}-q_{0,j-1}=-\frac{1}{L}\sum_{n=2}^{\frac{m}{2}\text{ or }\frac{m-1}{2}}2f_n(1)\sin n\left(j-\frac{1}{2}\right)\delta-$$
$$Qd_1[\cos(j-1)\delta-\cos j\delta]-\sum_{n=2}^{\frac{m}{2}\text{ or }\frac{m-1}{2}}Qd_n[\cos n(j-1)\delta-\cos nj\delta]$$

Now q_{0j} can be found by replacing j with a dummy index k, summing over k from $k=1$ to $k=j$, and using the condition that the torque on a cross section within bay $i=0$ balances the applied torque. This procedure results in the following equation for the shear flow in the central bay:

$$q_{0j}=Qd_0+Qd_1\cos j\delta+\sum_{n=2}^{\frac{m}{2}\text{ or }\frac{m-1}{2}}\left(\frac{f_n(1)}{L\sin\frac{n\delta}{2}}+Qd_n\right)\cos nj\delta \qquad (47)$$

Consider the bending moment in rings $i=1$ and $i=0$. The moment in ring $i=0$ is identical in magnitude to the moment in ring $i=1$ but of opposite sign. The tangential loading per unit arc length on the portion of ring $i=1$ between stringer j and stringer $j+1$ is illustrated in sketch (d):

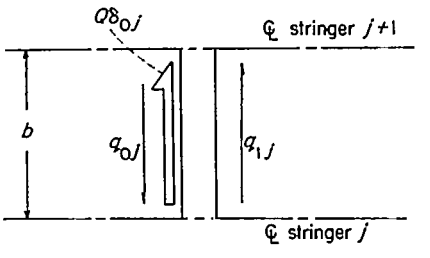

Sketch (d).

When these tangential loads are added and the series expansions for q_{0j}, q_{1j}, and δ_{0j} are introduced, the total load per unit arc length on ring $i=1$ is given by

$$q_{1j}-q_{0j}+Q\delta_{0j}=\sum_{n=2}^{\frac{m}{2}\text{ or }\frac{m-1}{2}}\frac{f_n(2)-3f_n(1)}{2L\sin\frac{n\delta}{2}}\cos nj\delta$$

By analogy with equations (16) and (17) the bending moment in ring $i=1$ is

$$M(1,\phi)=-\sum_{n=2}^{\frac{m}{2}\text{ or }\frac{m-1}{2}}\frac{R^2m}{2\pi L}[f_n(2)-3f_n(1)]H_2(n,\phi) \qquad (48)$$

Expressions for stringer loads, shear flows, and ring moments have been written in terms of the coefficients $f_n(i)$. The stringer loads are given in equation (43), the shear flows in equations (44) and (47), and ring moments

in equations (45) and (48). These expressions are ready to be substituted into the equation which results from minimizing the stress energy with respect to $f_n(i)$.

Energy analysis.—Because the longitudinal symmetry relations which exist for the distributed perturbation load, equations (27), also exist in the case of the shear perturbation load, the stress-energy expression used in the distributed-load problem can be used here. The expressions obtained on minimizing this stress energy, equations (38) and (39), are also applicable here. Consequently, the stringer loads, shear flows, and ring moments just derived are substituted into equations (38) and (39). At this stage in the two preceding cases, certain definite sums and a definite integral were introduced to simplify the equations. A similar procedure is followed here.

The definite sums which are of interest are

$$\sum_{j=0}^{m-1} \sin n\left(j-\frac{1}{2}\right)\delta=0$$

and for the integers n and l restricted to the range $1\leqq n\leqq\frac{m}{2}$ and $1\leqq l\leqq\frac{m}{2}$

$$\sum_{j=0}^{m-1} \cos lj\delta \cos nj\delta=0 \qquad (l\neq n)$$

$$=\frac{m}{2}\left(1+\delta_{n,\frac{m}{2}}\right) \qquad (l=n)$$

and

$$\sum_{j=0}^{m-1} \sin l\left(j-\frac{1}{2}\right)\delta \sin n\left(j-\frac{1}{2}\right)\delta=0 \qquad (l\neq n)$$

$$=\frac{m}{2}\left(1+\delta_{n,\frac{m}{2}}\right) \qquad (l=n)$$

The required definite integral, which is derived in appendix C, is

$$\int_0^{2\pi} H_2(n,\phi)H_2(l,\phi)d\phi=0 \qquad (l\neq n)$$

$$=S_n\pi\left(1+\delta_{n,\frac{m}{2}}\right) \qquad (l=n)$$

where n and l are restricted to $2\leqq n\leqq\frac{m}{2}$ and $2\leqq l\leqq\frac{m}{2}$. After simplification the following equations result:

For $i=1$,

$$f_n(3)+(2\gamma_n-1)f_n(2)+2(\beta_n-\gamma_n)f_n(1)$$
$$=-2LQd_n\left(\frac{\beta_n-4\gamma_n-11}{3}\right)\sin\frac{n\delta}{2} \qquad (49a)$$

For $i=2$,

$$f_n(4)+2\gamma_n f_n(3)+2\beta_n f_n(2)+(2\gamma_n-1)f_n(1)=0 \qquad (49b)$$

For $i\geqq 3$,

$$f_n(i+2)+2\gamma_n f_n(i+1)+2\beta_n f_n(i)+2\gamma_n f_n(i-1)+f_n(i-2)=0 \qquad (49c)$$

Solution of finite-difference equation.—Equation (49c) is the same finite-difference equation for which the solution is written in the two preceding sections. Substitution of this solution, equation (41), into equation (49a) and (49b) gives two simultaneous algebraic equations for α_{1n} and α_{2n}, the arbitrary constants. Solution of this system yields

$$\alpha_{1n}=-\frac{\Gamma_{2n}\dfrac{\beta_n-4\gamma_n-11}{3}\sin\dfrac{n\delta}{2}}{\Omega_{1n}\Gamma_{2n}-\Gamma_{1n}\Omega_{2n}}\frac{4QL}{m\left(1+\delta_{n,\frac{m}{2}}\right)}$$

$$\alpha_{2n}=\frac{\Gamma_{1n}\dfrac{\beta_n-4\gamma_n-11}{3}\sin\dfrac{n\delta}{2}}{\Omega_{1n}\Gamma_{2n}-\Gamma_{1n}\Omega_{2n}}\frac{4QL}{m\left(1+\delta_{n,\frac{m}{2}}\right)}$$

The Ω's and Γ's in this case are precisely the same as in the preceding case of the distributed perturbation load; Ω_{sn} is given by equation (42a) and Γ_{sn} by equation (42b).

With the coefficients $f_n(i)$ known for the shear perturbation load, the stringer loads are obtained from equation (43) and the shear flows can be found from equations (44) and (47). For panel row $j=0$, the shear flow equations become

$$q_{i0}=\sum_{n=2}^{\frac{m}{2}\text{ or }\frac{m-1}{2}}\frac{f_n(i+1)-f_n(i)}{2L\sin\dfrac{n\delta}{2}} \qquad (i\geqq 1)$$

and

$$q_{00}=\frac{3Q}{m}+\sum_{n=2}^{\frac{m}{2}\text{ or }\frac{m-1}{2}}\left[\frac{f_n(1)}{L\sin\dfrac{n\delta}{2}}+\frac{2Q}{m\left(1+\delta_{n,\frac{m}{2}}\right)}\right]$$

When the shear flows in panel row $j=0$ are known, it is simpler to compute the remainder of the shear flows by use of the equations of statics rather than equations (44) and (47). In shear panels (0,1) and (0, −1) adjacent to the loaded panel, the shear flow is given by

$$q_{01}=q_{0,-1}=q_{00}-\frac{2p_{11}+QL}{L}$$

All the other shear flows are found by use of equation (13). If desired, the ring bending moments can be found from equations (45) and (48) and the ring thrust and transverse shear can be calculated from the formulas given in appendix B.

LIMITING CASE OF RIGID RINGS

If the ring bending stiffness is allowed to increase indefinitely, the rings approach complete rigidity in bending, the parameter C approaches zero, and a considerable simplification results. For this limiting case, equations (23) for the concentrated perturbation load reduce to

$$f_n(i+1)-2\frac{B_n}{A_n}f_n(i)+f_n(i-1)=0 \qquad (i\geqq 1) \qquad (50)$$

where

$$A_n=3B\delta^2-1+\cos n\delta$$

$$B_n=3B\delta^2+2(1-\cos n\delta)$$

This can be shown easily by multiplying equations (23) through by C and allowing C to approach 0. Equation (50) is a second-order finite-difference equation with constant coefficients. The same equation, together with its general

solution, is given in reference 9, page 31. The solution compatible with the boundary conditions at infinity can be written as

$$f_n(i)=\alpha_n(\pm e^{-\lambda_n})^i \quad . \tag{51}$$

where

$$\cosh \lambda_n=\left|\frac{B_n}{A_n}\right|$$

and where the upper sign is taken when $A_n>0$ and the lower sign when $A_n<0$.

The arbitrary constant α_n is determined by evaluating the solutions, equation (51), for $i=0$ and introducing the value of $f_n(0)$ given in equation (12). The result is identical to α_{1n} given in equation (26)

$$\alpha_n=\frac{P}{m\left(1+\delta_{n,\frac{m}{2}}\right)} \qquad (n\geqq 2)$$

Equations (11) and (15), the expressions for stringer loads and shear flows, respectively, used before in the case of the concentrated perturbation load are still valid. The substitution into these expressions of the solution (51) with the constant α_n as found above yields the stringer loads and shear flows due to a concentrated perturbation load when the rings can be considered rigid.

For the case of the distributed perturbation load, equations (40) reduce in the limit to

$$(-A_n)f_n(2)+(2B_n+A_n)f_n(1)=3B\delta^2Sd_n$$

$$f_n(i+1)-2\frac{B_n}{A_n}f_n(i)+f_n(i-1)=0 \qquad (i\geqq 2)$$

The arbitrary constant α_n in the solution (51) is

$$\alpha_n=\frac{6B\delta^2}{A_n(\pm e^{-\lambda_n}+1)}\frac{S}{m\left(1+\delta_{n,\frac{m}{2}}\right)}$$

For the shear perturbation load, equations (49) reduce to

$$(-A_n)f_n(2)+(2B_n+A_n)f_n(1)=-6LQd_nB\delta^2\sin\frac{n\delta}{2}$$

$$f_n(i+1)-2\frac{B_n}{A_n}f_n(i)+f_n(i-1)=0 \qquad (i\geqq 2)$$

The solution is again equation (51) and α_n becomes

$$\alpha_n=-\frac{12B\delta^2\sin\frac{n\delta}{2}}{A_n(\pm e^{-\lambda_n}+1)}\frac{QL}{m\left(1+\delta_{n,\frac{m}{2}}\right)}$$

CONCLUDING REMARKS

A method is presented for the stress analysis of circular semimonocoque cylinders with cutouts. It is most accurate in problems where the cutout is located far from external restraints. The loading may be any combination of torsion, bending, shear, or axial load. Other loadings are permissible if the stress distribution in the cylinder without a cutout is known.

The method of analysis is based on the superposition of certain perturbation stress distributions to give the effects of the cutout on the stress distribution which would exist in the cylinder without a cutout. The equations for the three necessary perturbation stress distributions are derived in this report, and tables of coefficients calculated from these equations are presented for a wide range of structural properties. Ring bending flexibility is taken into account in the tables. The tables refer to a structure having 36 stringers, but they can be used for cylinders having any number of stringers by redistribution of the actual stringer area into 36 fictitious stringers. Sample calculations utilizing the tables of coefficients are presented to illustrate the analytical procedure.

LANGLEY AERONAUTICAL LABORATORY,
NATIONAL ADVISORY COMMITTEE FOR AERONAUTICS,
LANGLEY FIELD, VA., *March 2, 1955.*

APPENDIX A

SUMMARY OF SIGNIFICANT EQUATIONS

The formulas and parameters required for computing the stress distribution due to concentrated, distributed, and shear perturbation loads are collected in this appendix for reference.

STRINGER LOADS

Concentrated perturbation load (see fig. 3 (a)):

$$p_{ij}=\frac{P}{2m}+\frac{P}{m}\cos j\delta+\sum_{n=2}^{\frac{m}{2}\text{ or }\frac{m-1}{2}} f_n(i)\cos nj\delta \qquad (i\geqq 0)$$

where P is the applied load.

Distributed perturbation load (see fig. 3 (b)):

$$p_{ij}=\frac{S}{2m}+\frac{S}{m}\cos j\delta+\sum_{n=2}^{\frac{m}{2}\text{ or }\frac{m-1}{2}} f_n(i)\cos nj\delta \qquad (i\geqq 1)$$

where S is the total applied load.

Shear perturbation load (see fig. 3 (c)):

$$p_{ij}=\sum_{n=2}^{\frac{m}{2}\text{ or }\frac{m-1}{2}} f_n(i)\sin n\left(j-\frac{1}{2}\right)\delta \qquad (i\geqq 1)$$

SHEAR FLOWS

Concentrated perturbation load (see fig. 3 (a)):
For the shear panels in panel row $j=0$,

$$q_{i0}=\frac{p_{i0}-p_{i+1,0}}{2L}$$

and, for the remainder of the shear panels,

$$q_{ij}=\frac{p_{ij}-p_{i+1,j}}{L}+q_{i,j-1} \qquad (j\geqq 1)$$

Distributed perturbation load (see fig. 3 (b)):
For the shear panel (0,0),

$$q_{00}=\frac{S-2p_{10}}{2L}$$

for the remainder of the shear panels in panel row $j=0$,

$$q_{i0}=\frac{p_{i0}-p_{i+1,0}}{2L} \qquad (i\geqq 1)$$

and, for all other shear panels,

$$q_{ij}=\frac{p_{ij}-p_{i+1,j}}{L}+q_{i,j-1} \qquad (j\geqq 1)$$

Shear perturbation load (see fig. 3 (c)):
For the panel about which the load is applied,

$$q_{00}=\frac{3Q}{m}+\sum_{n=2}^{\frac{m}{2}\text{ or }\frac{m-1}{2}}\left[\frac{f_n(1)}{L\sin\frac{n\delta}{2}}+\frac{2Q}{m\left(1+\delta_{n,\frac{m}{2}}\right)}\right]$$

for the remainder of the shear panels in row $j=0$,

$$q_{i0}=\sum_{n=2}^{\frac{m}{2}\text{ or }\frac{m-1}{2}}\frac{f_n(i+1)-f_n(i)}{2L\sin\frac{n\delta}{2}} \qquad (i\geqq 1)$$

for the shear panel (0,1),

$$q_{01}=q_{00}-\frac{2p_{11}+QL}{L}$$

for the remainder of the shear panels in panel row $j=1$,

$$q_{i1}=\frac{p_{i1}-p_{i+1,1}}{L}+q_{i0} \qquad (i\geqq 1)$$

and, for all other shear panels,

$$q_{ij}=\frac{p_{ij}-p_{i+1,j}}{L}+q_{i,j-1} \qquad (j\geqq 2)$$

EVALUATION OF THE TRIGONOMETRIC COEFFICIENTS $f_n(i)$ FOR FLEXIBLE RINGS

Basic parameters:

$$B=\frac{E}{G}\frac{t'}{t}\frac{R^2}{L^2}$$

$$C=\frac{t'R^6}{IL^3}$$

Auxiliary parameters:

$$\beta_n=3+\frac{4+3\dfrac{B\delta^2}{\sin^2\frac{n\delta}{2}}}{12CS_n}$$

$$\gamma_n=-2+\frac{1-\dfrac{3}{2}\dfrac{B\delta^2}{\sin^2\frac{n\delta}{2}}}{12CS_n}$$

Discriminating parameter:

$$D_n=\frac{2(\beta_n-1)}{\gamma_n^2}$$

Trigonometric coefficients:

$$f_n(i)=\zeta_n^i[\alpha_{1n}\Lambda_{1n}(i)+\alpha_{2n}\Lambda_{2n}(i)] \qquad (n\geqq 2)$$

where

$$\zeta_n=-\frac{\gamma_n}{|\gamma_n|}e^{-\psi_n}$$

$$\Lambda_{1n}(i)=\cos i\chi_n \qquad (D_n>1)$$
$$=1 \qquad (D_n=1)$$
$$=\cosh i\chi_n \qquad (D_n<1)$$
$$\Lambda_{2n}(i)=\sin i\chi_n \qquad (D_n>1)$$
$$=i \qquad (D_n=1)$$
$$=\sinh i\chi_n \qquad (D_n<1)$$

$$\chi_n=\frac{1}{2}\cos^{-1}\left[\frac{\beta_n-1}{2}-\sqrt{\left(\frac{\beta_n+1}{2}\right)^2-\gamma_n^2}\right] \qquad (D_n>1)$$

$$=\frac{1}{2}\cosh^{-1}\left[\frac{\beta_n-1}{2}-\sqrt{\left(\frac{\beta_n+1}{2}\right)^2-\gamma_n^2}\right] \qquad (D_n<1)$$

$$\psi_n=\frac{1}{2}\cosh^{-1}\left[\frac{\beta_n-1}{2}+\sqrt{\left(\frac{\beta_n+1}{2}\right)^2-\gamma_n^2}\right]$$

Arbitrary constants for concentrated perturbation load:

$$\alpha_{1n}=\frac{P}{m\left(1+\delta_{n,\frac{m}{2}}\right)}$$

$$\alpha_{2n}=-\frac{\Theta_{1n}+2(\gamma_n+1)}{\Theta_{2n}}\frac{P}{m\left(1+\delta_{n,\frac{m}{2}}\right)}$$

where P is the applied load and

$$\Theta_{sn}=\zeta_n^3\Lambda_{sn}(3)+2\gamma_n\zeta_n^2\Lambda_{sn}(2)+(2\beta_n-1)\zeta_n\Lambda_{sn}(1) \qquad (s=1,2)$$

Arbitrary constants for distributed perturbation load:

$$\alpha_{1n}=\frac{\Gamma_{2n}\dfrac{\beta_n-4\gamma_n-2}{3}+\Omega_{2n}}{\Omega_{1n}\Gamma_{2n}-\Gamma_{1n}\Omega_{2n}}\frac{2S}{m\left(1+\delta_{n,\frac{m}{2}}\right)}$$

$$\alpha_{2n}=-\frac{\Omega_{1n}+\Gamma_{1n}\dfrac{\beta_n-4\gamma_n-2}{3}}{\Omega_{1n}\Gamma_{2n}-\Gamma_{1n}\Omega_{2n}}\frac{2S}{m\left(1+\delta_{n,\frac{m}{2}}\right)}$$

where S is the total applied load and

$$\Omega_{sn}=\zeta_n^3\Lambda_{sn}(3)+(2\gamma_n-1)\zeta_n^2\Lambda_{sn}(2)+2(\beta_n-\gamma_n)\zeta_n\Lambda_{sn}(1) \qquad (s=1,2)$$

$$\Gamma_{sn}=\zeta_n^4\Lambda_{sn}(4)+2\gamma_n\zeta_n^3\Lambda_{sn}(3)+2\beta_n\zeta_n^2\Lambda_{sn}(2)+(2\gamma_n-1)\zeta_n\Lambda_{sn}(1) \qquad (s=1,2)$$

Arbitrary constants for shear perturbation load:

$$\alpha_{1n}=-\frac{\Gamma_{2n}\dfrac{\beta_n-4\gamma_n-11}{3}\sin\frac{n\delta}{2}}{\Omega_{1n}\Gamma_{2n}-\Gamma_{1n}\Omega_{2n}}\frac{4QL}{m\left(1+\delta_{n,\frac{m}{2}}\right)}$$

$$\alpha_{2n}=\frac{\Gamma_{1n}\frac{\beta_n-4\gamma_n-11}{3}\sin\frac{n\delta}{2}}{\Omega_{1n}\Gamma_{2n}-\Gamma_{1n}\Omega_{2n}}\frac{4QL}{m\left(1+\delta_{n,\frac{m}{2}}\right)}$$

where Q is the applied load per unit length.

EVALUATION OF THE TRIGONOMETRIC COEFFICIENTS $f_n(i)$ FOR RIGID RINGS

Basic parameter:

$$B=\frac{E}{G}\frac{t'}{t}\frac{R^2}{L^2}$$

Auxiliary parameters:

$$A_n=3B\delta^2-1+\cos n\delta$$

$$B_n=3B\delta^2+2(1-\cos n\delta)$$

$$\lambda_n=\cosh^{-1}\left|\frac{B_n}{A_n}\right|$$

Trigonometric coefficients:

$$f_n(i)=\alpha_n\left(\frac{A_n}{|A_n|}e^{-\lambda_n}\right)^i$$

Arbitrary constant for concentrated perturbation load:

$$\alpha_n=\frac{P}{m\left(1+\delta_{n,\frac{m}{2}}\right)}$$

Arbitrary constant for distributed perturbation load:

$$\alpha_n=\frac{6B\delta^2}{A_n\left(\frac{A_n}{|A_n|}e^{-\lambda_n}+1\right)}\frac{S}{m\left(1+\delta_{n,\frac{m}{2}}\right)}$$

Arbitrary constant for shear perturbation load:

$$\alpha_n=-\frac{12B\delta^2\sin\frac{n\delta}{2}}{A_n\left(\frac{A_n}{|A_n|}e^{-\lambda_n}+1\right)}\frac{QL}{m\left(1+\delta_{n,\frac{m}{2}}\right)}$$

APPENDIX B

BENDING MOMENT, AXIAL THRUST, AND TRANSVERSE SHEAR IN RINGS

Expressions will be developed for the bending moment, axial thrust, and transverse shear in a circular ring under tangential loads such as those which arise from the differences in shear flow across a ring in a circular semimonocoque cylinder.

Two cases must be considered: One case occurs with the concentrated and distributed perturbation loads, where the ring loading is antisymmetric about stringer $j=0$. The other case occurs with the shear perturbation load, where the ring loading is symmetric about panel row $j=0$.

CONCENTRATED AND DISTRIBUTED PERTURBATION LOADS

For the concentrated and distributed perturbation loads, the tangential loading on ring i has been written in the form of a finite trigonometric series (see eq. (16))

$$F_{ij}=q_{ij}-q_{i-1,j}=\sum_{n=2}^{\frac{m}{2}\text{ or }\frac{m-1}{2}}b_{ni}\sin n\left(j+\frac{1}{2}\right)\delta \qquad \text{(B1)}$$

where

$$b_{ni}=-\frac{\Delta_{ii}f_n(i)}{2L\sin\frac{n\delta}{2}} \qquad (n\geqq 2)$$

This ring load has a stepwise variation around the ring, being constant between stringers and having jump discontinuities at the stringers. The limitation that $n\geqq 2$ ensures that the ring is in equilibrium.

The procedure will be to expand each term of the series (B1) in an infinite Fourier series in the variable ϕ. For each harmonic of the Fourier series, that is, for a continuous sinusoidal tangential force distribution on the ring, the moment, thrust, and shear in the ring are easily found. (See ref. 8, p. 33, for example.) On the basis of inextensional deformation and the neglect of transverse shear distortions, the results are as follows: If the tangential load on ring i is given by

$$\bar{a}_{ni}\cos n\phi+\bar{b}_{ni}\sin n\phi \qquad (n\geqq 2)$$

then the moment, thrust, and shear in this ring are, respectively,

$$\left.\begin{aligned}
M_n(i,\phi)&=-\bar{a}_{ni}\frac{R^2}{n(n^2-1)}\sin n\phi+\bar{b}_{ni}\frac{R^2}{n(n^2-1)}\cos n\phi\\
T_n(i,\phi)&=-\bar{a}_{ni}\frac{R}{n^2-1}n\sin n\phi+\bar{b}_{ni}\frac{R}{n^2-1}n\cos n\phi\\
V_n(i,\phi)&=\bar{a}_{ni}\frac{R}{n^2-1}\cos n\phi+\bar{b}_{ni}\frac{R}{n^2-1}\sin n\phi
\end{aligned}\right\} \qquad \text{(B2)}$$

Figure 11 shows the sign convention used in writing equations (B2).

Consider, now, one term of the series (B1). To expand this term in a Fourier series, write

$$b_{ni}\sin n\left(j+\frac{1}{2}\right)\delta=\sum_{r=n}^{\infty}(c_r)_{ni}\sin r\phi \qquad \text{(B3)}$$

where the $(c_r)_{ni}$'s are the Fourier coefficients. It is obvious that the first harmonic which will occur in the Fourier series in equation (B3) must be that for which $r=n$. The other harmonics, then, will be added to this to build up the step shape of the loading function. The convention for measuring angle ϕ in this case is illustrated in figure 12 (a). The index j can be thought of as a function of ϕ, that is: when $0<\phi<\delta$, $j=0$; when $\delta<\phi<2\delta$, $j=1$; and so forth.

In order to carry out the expansion, equation (B3) is multiplied through by $\sin l\phi$ and integrated from 0 to 2π

$$\sum_{j=0}^{m-1}\int_{j\delta}^{(j+1)\delta}b_{ni}\sin n\left(j+\frac{1}{2}\right)\delta\sin l\phi\,d\phi$$
$$=\int_0^{2\pi}\sum_{r=n}^{\infty}(c_r)_{ni}\sin r\phi\sin l\phi\,d\phi$$

After integration, the right-hand side of this equation becomes

$$(c_l)_{ni}\pi$$

by virtue of the orthogonality of the trigonometric functions. The left-hand side becomes

$$\frac{2\sin\frac{l\delta}{2}}{l}b_{ni}\sum_{j=0}^{m-1}\sin n\left(j+\frac{1}{2}\right)\delta\sin l\left(j+\frac{1}{2}\right)\delta$$

on carrying out the integration. From reference 7 it can be shown that

$$\sum_{j=0}^{m-1}\sin n\left(j+\frac{1}{2}\right)\delta\sin l\left(j+\frac{1}{2}\right)\delta$$
$$=\frac{m}{2}\left[(-1)^{\frac{l-n}{m}}J_{\frac{l-n}{m}}-(-1)^{\frac{l+n}{m}}J_{\frac{l+n}{m}}\right]$$

where $J_h=1$ if h is an integer, and $J_h=0$ if h is not an integer.

Thus the Fourier coefficients are given by

$$(c_l)_{ni}=\frac{m}{\pi}b_{ni}\frac{\sin\frac{l\delta}{2}}{l}\left[(-1)^{\frac{l-n}{m}}J_{\frac{l-n}{m}}-(-1)^{\frac{l+n}{m}}J_{\frac{l+n}{m}}\right]$$

The nth term of the tangential loading on the ring is

$$b_{ni}\sin n\left(j+\frac{1}{2}\right)\delta$$
$$=\frac{m}{\pi}b_{ni}\sum_{l=n}^{\infty}\left[(-1)^{\frac{l-n}{m}}J_{\frac{l-n}{m}}-(-1)^{\frac{l+n}{m}}J_{\frac{l+n}{m}}\right]\frac{\sin\frac{l\delta}{2}}{l}\sin l\phi \quad \text{(B4)}$$

By use of the properties of J_h this summation can be rewritten

$$b_{ni}\sin n\left(j+\frac{1}{2}\right)\delta=\frac{m}{\pi}b_{ni}\left[\sum_{r=0}^{\infty}(-1)^r\frac{\sin(rm+n)\frac{\delta}{2}}{rm+n}\sin(rm+n)\phi-\right.$$
$$\left.\sum_{r=1}^{\infty}(-1)^r\frac{\sin(rm-n)\frac{\delta}{2}}{rm-n}\sin(rm-n)\phi\right] \quad \text{(B5)}$$

On expansion by the sum and difference formulas of trigonometry and with the use of the fact that $m\delta=2\pi$, it is found that

$$\left.\begin{aligned}\sin(rm+n)\frac{\delta}{2}&=(-1)^r\sin\frac{n\delta}{2}\\ \sin(rm-n)\frac{\delta}{2}&=(-1)^{r+1}\sin\frac{n\delta}{2}\end{aligned}\right\} \quad \text{(B6)}$$

When equations (B6) are substituted into equation (B5), the following relationship results:

$$b_{ni}\sin n\left(j+\frac{1}{2}\right)\delta=\frac{m}{\pi}b_{ni}\sin\frac{n\delta}{2}\left[\sum_{r=0}^{\infty}\frac{\sin(rm+n)\phi}{rm+n}+\right.$$
$$\left.\sum_{r=1}^{\infty}\frac{\sin(rm-n)\phi}{rm-n}\right]$$
$$=\frac{m}{\pi}b_{ni}\sin\frac{n\delta}{2}\sum_{r=-\infty}^{\infty}\frac{\sin(rm+n)\phi}{rm+n} \quad \text{(B7)}$$

From the first of equations (B2) it is seen that if the tangential loading on the ring is given by the right-hand side of equation (B7) then the bending moment in that ring is

$$M_n(i,\phi)=R^2\frac{m}{\pi}b_{ni}\sin\frac{n\delta}{2}H_1(n,\phi) \quad \text{(B8)}$$

where

$$H_1(n,\phi)=\sum_{r=-\infty}^{\infty}\frac{\cos(rm+n)\phi}{(rm+n)^2[(rm+n)^2-1]}$$

Equation (B8) gives the bending moment in a ring which carries a tangential load distributed according to one term of the series of equation (B1). When the ring is loaded by the sum of such stepwise terms, as in equation (B1), then the moment is given by a sum of terms like (B8). The bending moment in ring i is therefore

$$M(i,\phi)=\sum_{n=2}^{\frac{m}{2}\text{ or }\frac{m-1}{2}}R^2\frac{m}{\pi}b_{ni}\sin\frac{n\delta}{2}H_1(n,\phi) \quad \text{(B9)}$$

For completeness, the expressions for axial thrust and transverse shear can be written in a similar manner—

$$T(i,\phi)=\sum_{n=2}^{\frac{m}{2}\text{ or }\frac{m-1}{2}}R\frac{m}{\pi}b_{ni}\sin\frac{n\delta}{2}K_1(n,\phi)$$

$$V(i,\phi)=\sum_{n=2}^{\frac{m}{2}\text{ or }\frac{m-1}{2}}R\frac{m}{\pi}b_{ni}\sin\frac{n\delta}{2}L_1(n,\phi)$$

where

$$K_1(n,\phi)=\sum_{r=-\infty}^{\infty}\frac{\cos(rm+n)\phi}{(rm+n)^2-1}$$

$$L_1(n,\phi)=\sum_{r=-\infty}^{\infty}\frac{\sin(rm+n)\phi}{(rm+n)[(rm+n)^2-1]}$$

SHEAR PERTURBATION LOAD

In the case of the shear perturbation load, the tangential loading on ring i is given by the finite trigonometric series

$$F_{ij}=q_{ij}-q_{i-1,j}=\sum_{n=2}^{\frac{m}{2}\text{ or }\frac{m-1}{2}}a_{ni}\cos nj\delta \quad \text{(B10)}$$

where

$$a_{ni}=\frac{\Delta_{ti}f_n(i)}{2L\sin\frac{n\delta}{2}} \qquad (n\geqq 2)$$

Equation (B10) can be treated in a manner analogous to the handling of equation (B1). That is, each term of the series in equation (B10) can be expanded in a Fourier series. Then the moment, thrust, and shear in the ring are written immediately.

Analogous to equation (B3), write

$$a_{ni}\cos nj\delta=\sum_{r=n}^{\infty}(c_r)_{ni}\cos r\phi \quad \text{(B11)}$$

where, now, the angle ϕ is as shown in figure 12 (b). If both sides of equation (B11) are multiplied by $\cos l\phi$ and integrated from 0 to 2π, there results for the Fourier coefficients:

$$(c_l)_{ni}=\frac{2\sin\frac{l\delta}{2}}{\pi l}a_{ni}\sum_{j=0}^{m-1}\cos nj\delta\cos lj\delta$$

It can be shown (see ref. 7) that

$$\sum_{j=0}^{m-1} \cos nj\delta \cos lj\delta = \frac{m}{2}\left(J_{\frac{l-n}{m}} + J_{\frac{l+n}{m}}\right)$$

so the nth term of the tangential loading on the ring is

$$a_{nt} \cos nj\delta = \frac{m}{\pi} a_{nt} \sum_{l=n}^{\infty} \left(J_{\frac{l-n}{m}} + J_{\frac{l+n}{m}}\right) \frac{\sin \frac{l\delta}{2}}{l} \cos l\phi \quad \text{(B12)}$$

This summation becomes

$$a_{nt} \cos nj\delta = \frac{m}{\pi} a_{nt} \sin \frac{n\delta}{2} \sum_{r=-\infty}^{\infty} (-1)^r \frac{\cos (rm+n)\phi}{rm+n}$$

which corresponds to equation (B7). Then the bending moment is

$$M(i,\phi) = -\sum_{n=2}^{\frac{m}{2} \text{ or } \frac{m-1}{2}} R^2 \frac{m}{\pi} a_{nt} \sin \frac{n\delta}{2} H_2(n,\phi) \quad \text{(B13)}$$

Similarly, thrust and shear are

$$T(i,\phi) = -\sum_{n=2}^{\frac{m}{2} \text{ or } \frac{m-1}{2}} R \frac{m}{\pi} a_{nt} \sin \frac{n\delta}{2} K_2(n,\phi)$$

and

$$V(i,\phi) = \sum_{n=2}^{\frac{m}{2} \text{ or } \frac{m-1}{2}} R \frac{m}{\pi} a_{nt} \sin \frac{n\delta}{2} L_2(n,\phi)$$

where

$$H_2(n,\phi) = \sum_{r=-\infty}^{\infty} (-1)^r \frac{\sin (rm+n)\phi}{(rm+n)^2[(rm+n)^2-1]}$$

$$K_2(n,\phi) = \sum_{r=-\infty}^{\infty} (-1)^r \frac{\sin (rm+n)\phi}{(rm+n)^2-1}$$

$$L_2(n,\phi) = \sum_{r=-\infty}^{\infty} (-1)^r \frac{\cos (rm+n)\phi}{(rm+n)[(rm+n)^2-1]}$$

APPENDIX C

EVALUATION OF DEFINITE INTEGRALS

In order to minimize the stress energy it is necessary to investigate the following definite integrals:

$$\int_0^{2\pi} H_1(n,\phi) H_1(l,\phi)\, d\phi$$

$$= \int_0^{2\pi} \sum_{r=-\infty}^{\infty} D_{rn} \cos (rm+n)\phi \sum_{s=-\infty}^{\infty} D_{sl} \cos (sm+l)\phi d\phi \quad \text{(C1)}$$

and

$$\int_0^{2\pi} H_2(n,\phi) H_2(l,\phi)\, d\phi$$

$$= \int_0^{2\pi} \sum_{r=-\infty}^{\infty} (-1)^r D_{rn} \sin (rm+n)\phi \sum_{s=-\infty}^{\infty} (-1)^s D_{sl} \sin (sm+l)\phi d\phi \quad \text{(C2)}$$

where

$$D_{rn} = \frac{1}{(rm+n)^2\,[(rm+n)^2-1]}$$

and where integers n and l are limited to the following ranges:

$$2 \leqq n \leqq \frac{m}{2}$$

$$2 \leqq l \leqq \frac{m}{2}$$

Consider the relation (C1). The right-hand side can be written

$$\frac{1}{2} \sum_{r=-\infty}^{\infty} \sum_{s=-\infty}^{\infty} D_{rn} D_{sl} \left[\int_0^{2\pi} \cos (rm+n-sm-l)\phi\, d\phi + \int_0^{2\pi} \cos (rm+n+sm+l)\phi\, d\phi\right]$$

$$= \frac{1}{2} \sum_{r=-\infty}^{\infty} \sum_{s=-\infty}^{\infty} D_{rn} D_{sl} (\delta_{rm+n,\, sm+l} + \delta_{rm+n,\, -sm-l})\, 2\pi$$

Now, by virtue of the limited range of the integers n and l, the following relations can be written:

$$\delta_{rm+n,\, sm+l} = \delta_{s,\, r-\frac{l-n}{m}} = \delta_{sr}\delta_{ln}$$

$$\delta_{rm+n,\, -sm-l} = \delta_{s,\, -r-\frac{l+n}{m}} = \delta_{s,\, -r-1}\delta_{l,\, \frac{m}{2}}\delta_{n,\, \frac{m}{2}}$$

Thus, when $2 \leqq n < \frac{m}{2}$, equation (C1) yields

$$\int_0^{2\pi} H_1(n,\phi) H_1(l,\phi)\, d\phi = 0 \qquad (l \neq n)$$

$$= \sum_{r=-\infty}^{\infty} D_{rn}^2 \pi = S_n \pi \qquad (l = n)$$

If $n = \frac{m}{2}$, the following equation is obtained:

$$\int_0^{2\pi} H_1\left(\frac{m}{2}, \phi\right) H_1\left(\frac{m}{2}, \phi\right) d\phi = \sum_{r=-\infty}^{\infty} \left(D_{r,\frac{m}{2}}^2 + D_{r,\frac{m}{2}} D_{-r-1,\frac{m}{2}}\right)\pi$$

Since

$$D_{-r-1,\frac{m}{2}} = \frac{1}{\left(-rm-m+\frac{m}{2}\right)^2\left[\left(-rm-m+\frac{m}{2}\right)^2-1\right]}$$

$$= \frac{1}{\left(-rm-\frac{m}{2}\right)^2\left[\left(-rm-\frac{m}{2}\right)^2-1\right]}$$

$$= D_{r,\frac{m}{2}}$$

it is found that when $n = \frac{m}{2}$

$$\int_0^{2\pi} H_1\left(\frac{m}{2}, \phi\right) H_1\left(\frac{m}{2}, \phi\right) d\phi = 2 \sum_{r=-\infty}^{\infty} D_{r,\frac{m}{2}}^2 \pi = 2 S_{\frac{m}{2}} \pi$$

To summarize, then,

$$\int_0^{2\pi} H_1(n,\phi)H_1(l,\phi)d\phi=0 \qquad (l\neq n)$$

$$=S_n\pi\left(1+\delta_{n,\frac{m}{2}}\right) \qquad (l=n)$$

Consider the relation (C2). It is handled in a manner analogous to the treatment of (C1). Equation (C2) can be written

$$\int_0^{2\pi} H_2(n,\phi)H_2(l,\phi)d\phi$$

$$=\sum_{r=-\infty}^{\infty}\sum_{s=-\infty}^{\infty}(-1)^r D_{rn}(-1)^s D_{sl}\frac{1}{2}(\delta_{rm+n,sm+l}-\delta_{rm+n,-sm-l})2\pi$$

$$=\sum_{r=-\infty}^{\infty}\sum_{s=-\infty}^{\infty}(-1)^r(-1)^s D_{rn}D_{sl}\left(\delta_{sr}\delta_{nl}-\delta_{s,-r-1}\delta_{n,\frac{m}{2}}\delta_{l,\frac{m}{2}}\right)\pi$$

For $2\leqq n<\frac{m}{2}$,

$$\int_0^{2\pi} H_2(n,\phi)H_2(l,\phi)d\phi=0 \qquad (l\neq n)$$

$$=\sum_{r=-\infty}^{\infty} D_{rn}^2\pi=S_n\pi \qquad (l=n)$$

If $n=\frac{m}{2}$,

$$\int_0^{2\pi} H_2\left(\frac{m}{2},\phi\right)H_2\left(\frac{m}{2},\phi\right)d\phi$$

$$=\sum_{r=-\infty}^{\infty}\left[D_{r,\frac{m}{2}}^2-(-1)^r(-1)^{-r-1}D_{r,\frac{m}{2}}D_{-r-1,\frac{m}{2}}\right]\pi$$

$$=\sum_{r=-\infty}^{\infty}\left[D_{r,\frac{m}{2}}^2-(-1)^{-1}D_{r,\frac{m}{2}}^2\right]\pi$$

$$=2\sum_{r=-\infty}^{\infty} D_{r,\frac{m}{2}}^2\pi$$

$$=2S_{\frac{m}{2}}\pi$$

Thus the definite integral (C2) gives precisely the same result as (C1)

$$\int_0^{2\pi} H_2(n,\phi)H_2(l,\phi)d\phi=0 \qquad (l\neq n)$$

$$=S_n\pi\left(1+\delta_{n,\frac{m}{2}}\right) \qquad (l=n)$$

The sum

$$S_n=\sum_{r=-\infty}^{\infty} D_{rn}^2=\sum_{r=-\infty}^{\infty}\frac{1}{(rm+n)^4[(rm+n)^2-1]^2}$$

can be expressed in closed form with the aid of formula 6.495, number 2, reference 10. The result is

$$S_n=\frac{\delta^4}{12}\frac{2+\cos n\delta}{(1-\cos n\delta)^2}+\frac{\delta^2}{1-\cos n\delta}-\frac{\delta^2}{4}\frac{\cos n\delta\cos\delta-1}{(\cos n\delta-\cos\delta)^2}+$$

$$\frac{5}{4}\frac{\delta\sin\delta}{\cos n\delta-\cos\delta}$$

However, the series form of S_n, because of its rapid convergence, may be more convenient than the closed form for use in computation.

REFERENCES

1. Beskin, Leon: Stress Analysis of Open Cylindrical Membranes, Jour. Aero. Sci., vol. 11, no. 4, Oct. 1944, pp. 343–355.
2. Gololobov, M. M.: Shear Distribution Due to Twist in a Cylindrical Fuselage with a Cutout. Jour. Aero. Sci., vol. 14, no. 4, Apr. 1947, pp. 253–256.
3. Langhaar, Henry L., and Smith, Clarence R.: Stresses in Cylindrical Semimonocoque Open Beams. Jour. Aero. Sci., vol. 14, no. 4, Apr. 1947, pp. 211–220.
4. Vaughan, W. L.: Fuselage Cutout Analysis. Aero Digest, vol. 63, no. 5, Nov. 1951, pp. 42–50.
5. Cicala, P.: Effects of Cutouts in Semimonocoque Structures. Jour. Aero. Sci., vol. 15, no. 3, Mar. 1948, pp. 171–179.
6. McComb, Harvey G., Jr.: Stress Analysis of Sheet-Stringer Panels With Cutouts. Jour. Aero. Sci., vol. 20, no. 6, June 1953, pp. 387–401.
7. Willers, Fr. A.: Practical Analysis. Dover Publications, Inc., c. 1948, pp. 334–336.
8. Duberg, John E., and Kempner, Joseph: Stress Analysis by Recurrence Formula of Reinforced Circular Cylinders Under Lateral Loads. NACA TN 1219, 1947.
9. Ebner, H., and Köller, H.: Calculation of Load Distribution in Stiffened Cylindrical Shells. NACA TM 866, 1938.
10. Adams, Edwin P., and Hippisley, R. L.: Smithsonian Mathematical Formulae and Tables of Elliptic Functions. Second Reprint, Smithsonian Misc. Coll., vol. 74, no. 1, 1947, p. 129.

TABLE 1.—LOAD DISTRIBUTION DUE TO A UNIT PERTURBATION LOAD

[$B=8$; $C=0$; $m=36$]

(a) Concentrated perturbation load on stringer $j=0$ at ring $i=0$

j	Stringer load, p_{ij}, at station—						
	$i=0$	$i=1$	$i=2$	$i=3$	$i=4$	$i=5$	$i=6$
0	0.5000	0.0476	0.0505	0.0459	0.0437	0.0426	0.0421
1	0	.0896	.0490	.0457	.0430	.0421	.0416
2	0	.0611	.0476	.0429	.0414	.0406	.0403
3	0	.0330	.0402	.0394	.0387	.0383	.0381
4	0	.0222	.0329	.0349	.0362	.0362	.0362
5	0	.0173	.0266	.0300	.0311	.0315	.0316
6	0	.0130	.0212	.0250	.0260	.0273	.0276
7	0	.0097	.0165	.0202	.0219	.0227	.0231
8	0	.0070	.0123	.0154	.0171	.0180	.0184
9	0	.0047	.0084	.0110	.0124	.0131	.0135
10	0	.0026	.0050	.0067	.0078	.0084	.0087
11	0	.0007	.0018	.0028	.0035	.0039	.0041
12	0	−.0010	−.0010	−.0008	−.0005	−.0003	−.0002
13	0	−.0034	−.0035	−.0039	−.0040	−.0040	−.0040
14	0	−.0036	−.0056	−.0065	−.0070	−.0072	−.0073
15	0	−.0046	−.0072	−.0086	−.0094	−.0098	−.0100
16	0	−.0053	−.0084	−.0102	−.0112	−.0117	−.0120
17	0	−.0057	−.0092	−.0111	−.0122	−.0128	−.0132
18	0	−.0059	−.0094	−.0115	−.0126	−.0132	−.0136

	Shear flow, $q_{ij}L$, at station—					
	$i=0$	$i=1$	$i=2$	$i=3$	$i=4$	$i=5$
0	0.2262	−0.0044	0.0063	0.0011	0.0006	0.0002
1	.1365	.0360	.0067	.0028	.0016	.0007
2	.0856	.0306	.0133	.0053	.0022	.0010
3	.0527	.0326	.0141	.0069	.0026	.0013
4	.0294	.0227	.0121	.0056	.0026	.0013
5	.0123	.0133	.0080	.0045	.0022	.0011
6	−.0007	.0052	.0047	.0029	.0016	.0008
7	−.0106	−.0016	.0010	.0012	.0008	.0004
8	−.0175	−.0068	−.0021	−.0005	.0000	.0000
9	−.0222	−.0106	−.0046	−.0019	−.0008	−.0003
10	−.0248	−.0129	−.0064	−.0030	−.0014	−.0006
11	−.0255	−.0140	−.0073	−.0037	−.0018	−.0009
12	−.0246	−.0140	−.0076	−.0040	−.0020	−.0010
13	−.0222	−.0129	−.0072	−.0039	−.0020	−.0010
14	−.0186	−.0110	−.0062	−.0034	−.0018	−.0009
15	−.0140	−.0083	−.0048	−.0026	−.0014	−.0007
16	−.0087	−.0052	−.0030	−.0017	−.0009	−.0005
17	−.0029	−.0018	−.0010	−.0006	−.0003	−.0002

(b) Distributed perturbation load on stringer $j=0$ between rings $i=0$ and $i=1$

j	Stringer load, p_{ij}, at station—					
	$i=1$	$i=2$	$i=3$	$i=4$	$i=5$	$i=6$
0	0.1924	0.0507	0.0469	0.0447	0.0430	0.0423
1	.0737	.0529	.0475	.0441	.0425	.0418
2	.0340	.0499	.0447	.0421	.0410	.0404
3	.0195	.0379	.0398	.0390	.0385	.0382
4	.0128	.0291	.0341	.0351	.0352	.0352
5	.0092	.0226	.0288	.0307	.0313	.0316
6	.0063	.0175	.0234	.0260	.0270	.0274
7	.0061	.0134	.0185	.0211	.0224	.0229
8	.0036	.0098	.0140	.0164	.0170	.0182
9	.0024	.0067	.0098	.0117	.0128	.0134
10	.0013	.0038	.0059	.0073	.0081	.0086
11	.0003	.0013	.0023	.0032	.0037	.0040
12	−.0006	−.0010	−.0009	−.0006	−.0004	−.0002
13	−.0013	−.0030	−.0037	−.0040	−.0040	−.0040
14	−.0020	−.0047	−.0061	−.0068	−.0071	−.0073
15	−.0025	−.0060	−.0080	−.0091	−.0096	−.0099
16	−.0029	−.0070	−.0094	−.0107	−.0114	−.0118
17	−.0031	−.0070	−.0102	−.0117	−.0126	−.0130
18	−.0032	−.0078	−.0106	−.0121	−.0130	−.0134

j	Shear flow, $q_{ij}L$, at station—					
	$i=0$	$i=1$	$i=2$	$i=3$	$i=4$	$i=5$
0	0.3077	0.0579	0.0034	0.0026	0.0008	0.0004
1	.1623	.0776	.0188	.0060	.0025	.0010
2	.0942	.0617	.0240	.0086	.0038	.0016
3	.0553	.0433	.0221	.0094	.0041	.0018
4	.0296	.0271	.0171	.0085	.0039	.0018
5	.0112	.0137	.0110	.0064	.0033	.0016
6	−.0025	.0030	.0062	.0038	.0022	.0012
7	−.0127	−.0063	.0001	.0012	.0010	.0006
8	−.0200	−.0115	−.0041	−.0012	−.0002	.0000
9	−.0248	−.0158	−.0072	−.0031	−.0013	−.0005
10	−.0273	−.0183	−.0093	−.0045	−.0021	−.0010
11	−.0279	−.0193	−.0104	−.0053	−.0027	−.0013
12	−.0268	−.0189	−.0105	−.0056	−.0029	−.0015
13	−.0240	−.0172	−.0098	−.0054	−.0028	−.0015
14	−.0201	−.0145	−.0084	−.0047	−.0025	−.0013
15	−.0151	−.0109	−.0064	−.0036	−.0020	−.0010
16	−.0094	−.0068	−.0040	−.0023	−.0013	−.0007
17	−.0032	−.0023	−.0014	−.0008	−.0004	−.0002

(c) Shear perturbation load about shear panel (0,0)

j	Stringer load, p_{ij}/L, at station—					
	$i=1$	$i=2$	$i=3$	$i=4$	$i=5$	$i=6$
1	−0.1192	0.0007	−0.0019	−0.0001	−0.0001	0.0006
2	−.0374	−.0118	−.0016	−.0003	−.0003	−.0001
3	−.0125	−.0100	−.0029	−.0010	−.0004	−.0003
4	−.0038	−.0061	−.0029	−.0011	−.0005	−.0002
5	−.0002	−.0031	−.0021	−.0010	−.0005	−.0002
6	.0010	−.0011	−.0012	−.0007	−.0004	−.0002
7	.0026	.0003	−.0006	−.0004	−.0002	−.0001
8	.0032	.0011	.0003	−.0001	−.0001	−.0001
9	.0036	.0017	.0006	.0002	.0000	.0000
10	.0037	.0020	.0009	.0004	.0002	.0001
11	.0037	.0021	.0011	.0006	.0002	.0001
12	.0035	.0021	.0012	.0006	.0003	.0002
13	.0032	.0020	.0011	.0006	.0003	.0002
14	.0028	.0018	.0010	.0006	.0003	.0002
15	.0023	.0014	.0009	.0005	.0003	.0002
16	.0017	.0011	.0007	.0004	.0002	.0001
17	.0010	.0007	.0004	.0003	.0001	.0001
18	.0004	.0002	.0001	.0001	.0000	.0000

j	Shear flow, q_{ij}, at station—					
	$i=0$	$i=1$	$i=2$	$i=3$	$i=4$	$i=5$
0	0.0288	0.1257	0.0068	0.0052	0.0016	0.0008
1	−.0629	.0097	.0154	.0034	.0016	.0007
2	.0119	−.0159	.0052	.0026	.0011	.0005
3	.0370	−.0184	−.0010	.0006	.0005	.0003
4	.0445	−.0162	−.0051	−.0010	−.0001	.0000
5	.0451	−.0124	−.0060	−.0021	−.0007	−.0002
6	.0419	−.0107	−.0058	−.0026	−.0010	−.0004
7	.0366	−.0083	−.0051	−.0026	−.0012	−.0006
8	.0302	−.0062	−.0042	−.0024	−.0012	−.0006
9	.0230	−.0043	−.0031	−.0019	−.0011	−.0006
10	.0156	−.0025	−.0021	−.0014	−.0008	−.0004
11	.0083	−.0010	−.0011	−.0008	−.0006	−.0003
12	.0012	.0004	−.0001	−.0003	−.0002	−.0002
13	−.0052	.0017	.0007	.0002	.0000	.0000
14	−.0108	.0027	.0014	.0007	.0003	.0002
15	−.0153	.0035	.0020	.0011	.0006	.0003
16	−.0187	.0041	.0024	.0013	.0007	.0004
17	−.0207	.0045	.0026	.0015	.0008	.0004
18	−.0214	.0046	.0027	.0016	.0009	.0005

TABLE 2.—LOAD DISTRIBUTION DUE TO A UNIT PERTURBATION LOAD

[$B = 30$; $C = 0$; $m = 36$]

(a) Concentrated perturbation load on stringer $j=0$ at ring $i=0$

j	Stringer load, p_H, at station—						
	$i=0$	$i=1$	$i=2$	$i=3$	$i=4$	$i=5$	$i=6$
0	0.5000	0.1518	0.0853	0.0636	0.0541	0.0491	0.0463
1	0	.0806	.0711	.0588	.0518	.0478	.0454
2	0	.0374	.0488	.0484	.0462	.0443	.0439
3	0	.0200	.0331	.0380	.0393	.0394	.0392
4	0	.0137	.0237	.0296	.0326	.0341	.0348
5	0	.0096	.0177	.0232	.0267	.0288	.0300
6	0	.0072	.0134	.0181	.0214	.0236	.0251
7	0	.0054	.0100	.0138	.0167	.0188	.0203
8	0	.0038	.0073	.0102	.0126	.0143	.0156
9	0	.0026	.0049	.0069	.0086	.0100	.0111
10	0	.0013	.0027	.0040	.0051	.0061	.0068
11	0	.0003	.0006	.0013	.0019	.0024	.0029
12	0	−.0006	−.0009	−.0010	−.0010	−.0009	−.0007
13	0	−.0014	−.0024	−.0031	−.0035	−.0037	−.0039
14	0	−.0021	−.0037	−.0048	−.0056	−.0062	−.0066
15	0	−.0027	−.0047	−.0063	−.0073	−.0081	−.0087
16	0	−.0030	−.0054	−.0072	−.0085	−.0095	−.0103
17	0	−.0033	−.0058	−.0078	−.0093	−.0104	−.0112
18	0	−.0034	−.0060	−.0080	−.0095	−.0107	−.0116

j	Shear flow, $q_H L$, at station—					
	$i=0$	$i=1$	$i=2$	$i=3$	$i=4$	$i=5$
0	0.1741	0.0333	0.0108	0.0048	0.0025	0.0014
1	.0375	.0489	.0231	.0118	.0065	.0038
2	.0501	.0375	.0234	.0140	.0084	.0052
3	.0292	.0253	.0186	.0126	.0083	.0054
4	.0155	.0153	.0127	.0096	.0068	.0047
5	.0057	.0074	.0072	.0061	.0047	.0035
6	−.0016	.0012	.0025	.0028	.0025	.0021
7	−.0069	−.0034	−.0013	−.0001	.0004	.0006
8	−.0108	−.0069	−.0042	−.0025	−.0014	−.0007
9	−.0133	−.0092	−.0063	−.0042	−.0027	−.0018
10	−.0146	−.0106	−.0076	−.0053	−.0037	−.0025
11	−.0149	−.0111	−.0081	−.0059	−.0042	−.0030
12	−.0143	−.0108	−.0080	−.0059	−.0043	−.0031
13	−.0128	−.0098	−.0074	−.0055	−.0041	−.0030
14	−.0107	−.0082	−.0063	−.0047	−.0036	−.0026
15	−.0080	−.0062	−.0048	−.0036	−.0027	−.0020
16	−.0050	−.0039	−.0030	−.0023	−.0017	−.0013
17	−.0017	−.0013	−.0010	−.0008	−.0006	−.0004

(b) Distributed perturbation load on stringer $j=0$ between rings $i=0$ and $i=1$

j	Stringer load, p_H, at station—					
	$i=1$	$i=2$	$i=3$	$i=4$	$i=5$	$i=6$
0	0.2850	0.1124	0.0729	0.0583	0.0514	0.0476
1	.0603	.0789	.0644	.0550	.0496	.0465
2	.0214	.0447	.0489	.0473	.0453	.0435
3	.0111	.0378	.0360	.0388	.0394	.0393
4	.0071	.0191	.0270	.0313	.0334	.0345
5	.0050	.0139	.0206	.0251	.0278	.0294
6	.0037	.0104	.0159	.0196	.0226	.0244
7	.0027	.0078	.0120	.0154	.0178	.0196
8	.0019	.0056	.0088	.0114	.0134	.0150
9	.0013	.0037	.0059	.0078	.0094	.0106
10	.0007	.0020	.0034	.0046	.0056	.0065
11	.0001	.0005	.0010	.0016	.0023	.0027
12	−.0004	−.0005	−.0010	−.0010	−.0009	−.0008
13	−.0008	−.0020	−.0028	−.0033	−.0036	−.0038
14	−.0011	−.0029	−.0043	−.0052	−.0059	−.0064
15	−.0014	−.0037	−.0056	−.0068	−.0077	−.0084
16	−.0016	−.0043	−.0063	−.0079	−.0091	−.0099
17	−.0017	−.0046	−.0069	−.0086	−.0099	−.0108
18	−.0018	−.0047	−.0070	−.0088	−.0101	−.0112

j	Shear flow, $q_H L$, at station—					
	$i=0$	$i=1$	$i=2$	$i=3$	$i=4$	$i=5$
0	0.2150	0.0853	0.0198	0.0073	0.0035	0.0019
1	.0944	.0678	.0343	.0167	.0088	.0050
2	.0516	.0444	.0301	.0183	.0109	.0066
3	.0204	.0277	.0220	.0156	.0103	.0067
4	.0152	.0156	.0141	.0111	.0082	.0057
5	.0052	.0067	.0074	.0067	.0054	.0041
6	−.0022	.0000	.0020	.0027	.0027	.0023
7	−.0076	−.0051	−.0023	−.0006	.0002	.0005
8	−.0115	−.0087	−.0056	−.0033	−.0019	−.0010
9	−.0140	−.0112	−.0077	−.0052	−.0034	−.0023
10	−.0154	−.0128	−.0090	−.0064	−.0045	−.0031
11	−.0156	−.0129	−.0096	−.0070	−.0050	−.0036
12	−.0149	−.0124	−.0094	−.0070	−.0051	−.0037
13	−.0134	−.0112	−.0085	−.0064	−.0048	−.0035
14	−.0112	−.0094	−.0072	−.0055	−.0041	−.0030
15	−.0084	−.0071	−.0054	−.0042	−.0031	−.0023
16	−.0053	−.0044	−.0034	−.0026	−.0020	−.0015
17	−.0018	−.0015	−.0012	−.0009	−.0007	−.0005

(c) Shear perturbation load about shear panel (0,0)

j	Stringer load, pu/L, at station—					
	$i=1$	$i=2$	$i=3$	$i=4$	$i=5$	$i=6$
1	−0.2242	−0.0331	−0.0081	−0.0029	−0.0013	−0.0007
2	−.0377	−.0329	−.0142	−.0064	−.0032	−.0017
3	−.0033	−.0148	−.0109	−.0064	−.0037	−.0022
4	−.0012	−.0060	−.0062	−.0047	−.0032	−.0021
5	.0013	−.0017	−.0029	−.0028	−.0022	−.0016
6	.0026	.0005	−.0008	−.0012	−.0012	−.0010
7	.0034	.0017	.0006	−.0001	−.0004	−.0004
8	.0039	.0025	.0014	.0007	.0003	.0000
9	.0042	.0029	.0020	.0012	.0008	.0004
10	.0042	.0031	.0023	.0016	.0011	.0007
11	.0041	.0032	.0024	.0017	.0012	.0009
12	.0039	.0031	.0023	.0018	.0013	.0009
13	.0036	.0028	.0022	.0017	.0013	.0009
14	.0031	.0024	.0019	.0015	.0011	.0009
15	.0025	.0020	.0016	.0012	.0010	.0007
16	.0018	.0015	.0012	.0009	.0007	.0006
17	.0011	.0009	.0007	.0006	.0004	.0003
18	.0004	.0003	.0002	.0002	.0002	.0001

j	Shear flow, qu, at station—					
	$i=0$	$i=1$	$i=2$	$i=3$	$i=4$	$i=5$
0	0.5133	0.1726	0.0305	0.0146	0.0070	0.0038
1	−.0352	−.0186	.0145	.0094	.0054	.0031
2	.0372	−.0233	−.0042	.0016	.0021	.0016
3	.0437	−.0167	−.0081	−.0023	−.0006	.0001
4	.0562	−.0120	−.0079	−.0043	−.0022	−.0010
5	.0535	−.0099	−.0067	−.0044	−.0027	−.0016
6	.0452	−.0087	−.0054	−.0040	−.0028	−.0018
7	.0413	−.0080	−.0042	−.0033	−.0025	−.0018
8	.0336	−.0037	−.0032	−.0026	−.0020	−.0015
9	.0251	−.0024	−.0022	−.0019	−.0016	−.0012
10	.0166	−.0014	−.0013	−.0012	−.0010	−.0009
11	.0085	−.0004	−.0005	−.0006	−.0006	−.0005
12	.0007	.0005	.0002	.0000	−.0001	−.0001
13	−.0064	.0012	.0006	.0005	.0003	.0002
14	−.0126	.0018	.0013	.0010	.0007	.0005
15	−.0176	.0023	.0018	.0013	.0010	.0007
16	−.0212	.0027	.0021	.0016	.0012	.0009
17	−.0235	.0029	.0022	.0017	.0013	.0010
18	−.0243	.0030	.0023	.0018	.0013	.0010

TABLE 3.—LOAD DISTRIBUTION DUE TO A UNIT PERTURBATION LOAD

[$B = 100$; $C = 0$; $m = 36$]

(a) Concentrated perturbation load on stringer $j=0$ at ring $i=0$

j	Stringer load, p_{ij}, at station—						
	$i=0$	$i=1$	$i=2$	$i=3$	$i=4$	$i=5$	$i=6$
0	0.5000	0.2648	0.1528	0.1062	0.0835	0.0692	0.0611
1	0	.0699	.0800	.0750	.0678	.0615	.0560
2	0	.0241	.0391	.0460	.0483	.0484	.0475
3	0	.0124	.0226	.0297	.0343	.0369	.0383
4	0	.0079	.0149	.0206	.0250	.0283	.0306
5	0	.0055	.0106	.0151	.0189	.0219	.0243
6	0	.0041	.0079	.0113	.0144	.0170	.0191
7	0	.0030	.0058	.0084	.0108	.0129	.0147
8	0	.0021	.0042	.0061	.0079	.0095	.0109
9	0	.0014	.0028	.0040	.0053	.0064	.0075
10	0	.0007	.0015	.0023	.0030	.0037	.0044
11	0	.0002	.0004	.0006	.0009	.0012	.0015
12	0	−.0004	−.0006	−.0008	−.0009	−.0010	−.0010
13	0	−.0003	−.0015	−.0021	−.0025	−.0029	−.0033
14	0	−.0012	−.0023	−.0033	−.0039	−.0045	−.0050
15	0	−.0015	−.0029	−.0040	−.0050	−.0058	−.0065
16	0	−.0018	−.0033	−.0046	−.0058	−.0068	−.0076
17	0	−.0019	−.0036	−.0050	−.0063	−.0074	−.0083
18	0	−.0020	−.0037	−.0052	−.0064	−.0076	−.0085

j	Shear flow, $q_{ij}L$, at station—					
	$i=0$	$i=1$	$i=2$	$i=3$	$i=4$	$i=5$
0	0.1296	0.0510	0.0233	0.0119	0.0066	0.0041
1	.0527	.0409	.0283	.0191	.0129	.0089
2	.0356	.0269	.0214	.0168	.0129	.0098
3	.0162	.0137	.0112	.0123	.0102	.0083
4	.0083	.0087	.0085	.0079	.0070	.0060
5	.0028	.0038	.0040	.0041	.0040	.0036
6	−.0018	−.0002	.0006	.0011	.0014	.0016
7	−.0043	−.0030	−.0020	−.0013	−.0007	−.0003
8	−.0064	−.0051	−.0040	−.0031	−.0023	−.0018
9	−.0078	−.0064	−.0053	−.0043	−.0035	−.0028
10	−.0085	−.0073	−.0060	−.0050	−.0042	−.0035
11	−.0087	−.0074	−.0063	−.0053	−.0045	−.0038
12	−.0083	−.0071	−.0061	−.0052	−.0044	−.0038
13	−.0074	−.0064	−.0055	−.0048	−.0041	−.0035
14	−.0063	−.0054	−.0047	−.0040	−.0034	−.0030
15	−.0047	−.0041	−.0036	−.0030	−.0025	−.0022
16	−.0029	−.0025	−.0022	−.0019	−.0016	−.0014
17	−.0010	−.0009	−.0007	−.0006	−.0006	−.0005

(b) Distributed perturbation load on stringer $j=0$ between rings $i=0$ and $i=1$

j	Stringer load, p_{ij}, at station—					
	$i=1$	$i=2$	$i=3$	$i=4$	$i=5$	$i=6$
0	0.3800	0.1972	0.1208	0.0812	0.0753	0.0648
1	.0428	.0770	.0779	.0714	.0645	.0589
2	.0127	.0324	.0431	.0474	.0485	.0480
3	.0063	.0177	.0264	.0321	.0357	.0377
4	.0040	.0115	.0179	.0229	.0267	.0295
5	.0028	.0081	.0129	.0170	.0204	.0231
6	.0020	.0060	.0096	.0129	.0157	.0181
7	.0015	.0044	.0072	.0097	.0119	.0138
8	.0011	.0032	.0051	.0070	.0087	.0102
9	.0007	.0021	.0034	.0047	.0059	.0070
10	.0004	.0011	.0019	.0026	.0033	.0040
11	.0001	.0002	.0005	.0006	.0011	.0014
12	−.0002	−.0005	−.0007	−.0009	−.0010	−.0010
13	−.0004	−.0012	−.0018	−.0023	−.0027	−.0030
14	−.0006	−.0018	−.0027	−.0035	−.0042	−.0048
15	−.0006	−.0022	−.0035	−.0045	−.0054	−.0062
16	−.0009	−.0028	−.0040	−.0052	−.0063	−.0073
17	−.0010	−.0028	−.0043	−.0057	−.0068	−.0078
18	−.0010	−.0028	−.0044	−.0058	−.0070	−.0080

j	Shear flow, $q_{ij}L$, at station—					
	$i=0$	$i=1$	$i=2$	$i=3$	$i=4$	$i=5$
0	0.1400	0.0814	0.0352	0.0168	0.0090	0.0052
1	.0543	.0472	.0343	.0234	.0158	.0108
2	.0289	.0275	.0237	.0191	.0148	.0113
3	.0162	.0161	.0151	.0133	.0112	.0092
4	.0082	.0083	.0087	.0082	.0074	.0065
5	.0026	.0032	.0039	.0041	.0040	.0036
6	−.0015	−.0007	.0002	.0008	.0012	.0014
7	−.0045	−.0038	−.0025	−.0016	−.0010	−.0005
8	−.0066	−.0057	−.0045	−.0035	−.0027	−.0020
9	−.0080	−.0071	−.0058	−.0048	−.0039	−.0031
10	−.0087	−.0078	−.0066	−.0055	−.0046	−.0038
11	−.0089	−.0080	−.0068	−.0058	−.0049	−.0041
12	−.0085	−.0077	−.0066	−.0056	−.0048	−.0041
13	−.0076	−.0069	−.0060	−.0051	−.0044	−.0038
14	−.0064	−.0063	−.0060	−.0043	−.0037	−.0032
15	−.0048	−.0044	−.0038	−.0033	−.0028	−.0024
16	−.0030	−.0027	−.0024	−.0020	−.0018	−.0015
17	−.0010	−.0009	−.0008	−.0007	−.0006	−.0006

(c) Shear perturbation load about shear panel (0,0)

j	Stringer load, p_{ij}/L, at station—					
	$i=1$	$i=2$	$i=3$	$i=4$	$i=5$	$i=6$
1	−0.3168	−0.1198	−0.0485	−0.0214	−0.0103	−0.0055
2	−.0288	−.0433	−.0335	−.0236	−.0148	−.0097
3	−.0043	−.0127	−.0147	−.0122	−.0107	−.0083
4	.0004	−.0035	−.0057	−.0064	−.0062	−.0054
5	.0022	.0001	−.0015	−.0025	−.0029	−.0029
6	.0032	.0018	.0007	−.0002	−.0008	−.0011
7	.0038	.0028	.0019	.0012	.0006	.0002
8	.0042	.0034	.0027	.0020	.0015	.0010
9	.0045	.0037	.0031	.0025	.0020	.0016
10	.0045	.0039	.0033	.0028	.0023	.0019
11	.0044	.0038	.0033	.0029	.0024	.0020
12	.0041	.0036	.0032	.0027	.0024	.0020
13	.0037	.0033	.0029	.0026	.0022	.0019
14	.0032	.0028	.0025	.0022	.0019	.0017
15	.0026	.0023	.0020	.0018	.0016	.0014
16	.0019	.0017	.0016	.0013	.0012	.0010
17	.0012	.0010	.0009	.0008	.0007	.0006
18	.0004	.0004	.0003	.0003	.0002	.0002

j	Shear flow, q_{ij}, at station—					
	$i=0$	$i=1$	$i=2$	$i=3$	$i=4$	$i=5$
0	0.3632	0.1638	0.0704	0.0337	0.0179	0.0104
1	−.0332	−.0342	−.0009	.0065	.0068	.0066
2	.0546	−.0197	−.0105	−.0043	−.0010	.0005
3	.0632	−.0114	−.0066	−.0058	−.0035	−.0020
4	.0634	−.0075	−.0064	−.0051	−.0038	−.0027
5	.0579	−.0053	−.0048	−.0041	−.0034	−.0027
6	.0515	−.0040	−.0036	−.0033	−.0028	−.0024
7	.0438	−.0029	−.0027	−.0025	−.0022	−.0020
8	.0363	−.0021	−.0020	−.0018	−.0017	−.0015
9	.0264	−.0014	−.0013	−.0013	−.0012	−.0011
10	.0174	−.0008	−.0008	−.0008	−.0007	−.0007
11	.0086	−.0002	−.0002	−.0003	−.0003	−.0003
12	.0004	.0003	.0002	.0001	.0001	.0000
13	−.0071	.0008	.0006	.0005	.0004	.0003
14	−.0135	.0011	.0010	.0008	.0007	.0006
15	−.0188	.0014	.0012	.0011	.0009	.0008
16	−.0226	.0017	.0014	.0012	.0011	.0009
17	−.0250	.0018	.0016	.0013	.0012	.0010
18	−.0258	.0018	.0016	.0014	.0012	.0010

TABLE 4.—LOAD DISTRIBUTION DUE TO A UNIT PERTURBATION LOAD

[$B = 300$; $C = 0$; $m = 38$]

(a) Concentrated perturbation load on stringer $j=0$ at ring $i=0$

j	Stringer load, p_{ij}, at station—						
	$i=0$	$i=1$	$i=2$	$i=3$	$i=4$	$i=5$	$i=6$
0	0.5000	0.3354	0.2366	0.1756	0.1370	0.1116	0.0945
1	0	.0506	.0710	.0782	.0781	.0752	.0713
2	0	.0149	.0271	.0369	.0417	.0453	.0472
3	0	.0074	.0142	.0201	.0250	.0290	.0320
4	0	.0046	.0091	.0132	.0168	.0201	.0228
5	0	.0032	.0064	.0094	.0121	.0147	.0170
6	0	.0024	.0047	.0069	.0090	.0110	.0128
7	0	.0018	.0035	.0051	.0067	.0082	.0096
8	0	.0012	.0025	.0036	.0048	.0059	.0070
9	0	.0008	.0016	.0024	.0033	.0039	.0046
10	0	.0004	.0008	.0013	.0017	.0021	.0026
11	0	.0001	.0002	.0003	.0004	.0006	.0007
12	0	−.0002	−.0004	−.0006	−.0007	−.0008	−.0009
13	0	−.0005	−.0010	−.0014	−.0017	−.0021	−.0023
14	0	−.0007	−.0014	−.0020	−.0026	−.0031	−.0035
15	0	−.0009	−.0018	−.0025	−.0032	−.0039	−.0045
16	0	−.0010	−.0020	−.0029	−.0037	−.0045	−.0052
17	0	−.0011	−.0022	−.0031	−.0040	−.0048	−.0056
18	0	−.0012	−.0022	−.0032	−.0041	−.0050	−.0057

j	Shear flow, $q_{ij}L$, at station—					
	$i=0$	$i=1$	$i=2$	$i=3$	$i=4$	$i=5$
0	0.0323	0.0494	0.0305	0.0193	0.0127	0.0086
1	.0317	.0284	.0229	.0194	.0156	.0125
2	.0168	.0162	.0151	.0136	.0120	.0105
3	.0094	.0094	.0092	.0087	.0081	.0075
4	.0049	.0050	.0061	.0060	.0049	.0047
5	.0015	.0018	.0021	.0023	.0024	.0024
6	−.0009	−.0005	−.0001	.0002	.0004	.0006
7	−.0026	−.0022	−.0018	−.0014	−.0011	−.0009
8	−.0039	−.0034	−.0030	−.0026	−.0022	−.0019
9	−.0047	−.0042	−.0038	−.0034	−.0030	−.0026
10	−.0051	−.0046	−.0042	−.0038	−.0034	−.0031
11	−.0052	−.0047	−.0043	−.0039	−.0035	−.0032
12	−.0049	−.0045	−.0041	−.0038	−.0034	−.0032
13	−.0044	−.0041	−.0037	−.0034	−.0032	−.0029
14	−.0037	−.0034	−.0031	−.0029	−.0026	−.0024
15	−.0028	−.0026	−.0024	−.0022	−.0020	−.0018
16	−.0017	−.0016	−.0015	−.0014	−.0012	−.0011
17	−.0006	−.0005	−.0005	−.0005	−.0004	−.0004

(b) Distributed perturbation load on stringer $j=0$ between rings $i=0$ and $i=1$

j	Stringer load, p_{ij}, at station—					
	$i=1$	$i=2$	$i=3$	$i=4$	$i=5$	$i=6$
0	0.4103	0.2890	0.2038	0.1549	0.1234	0.1026
1	.0286	.0628	.0757	.0785	.0768	.0732
2	.0076	.0213	.0318	.0390	.0436	.0464
3	.0037	.0109	.0172	.0227	.0271	.0306
4	.0023	.0069	.0111	.0150	.0185	.0215
5	.0016	.0048	.0079	.0108	.0134	.0158
6	.0012	.0036	.0058	.0080	.0100	.0119
7	.0009	.0026	.0043	.0059	.0074	.0089
8	.0006	.0018	.0031	.0042	.0054	.0064
9	.0004	.0012	.0020	.0028	.0035	.0043
10	.0002	.0006	.0010	.0015	.0019	.0024
11	.0000	.0001	.0002	.0003	.0005	.0006
12	−.0001	−.0004	−.0005	−.0007	−.0008	−.0009
13	−.0003	−.0007	−.0012	−.0016	−.0019	−.0022
14	−.0004	−.0011	−.0017	−.0023	−.0028	−.0033
15	−.0005	−.0014	−.0022	−.0029	−.0038	−.0042
16	−.0005	−.0015	−.0025	−.0033	−.0041	−.0048
17	−.0006	−.0017	−.0027	−.0036	−.0044	−.0052
18	−.0006	−.0017	−.0027	−.0037	−.0045	−.0054

j	Shear flow, $q_{ij}L$, at station—					
	$i=0$	$i=1$	$i=2$	$i=3$	$i=4$	$i=5$
0	0.0392	0.0644	0.0391	0.0244	0.0157	0.0104
1	.0320	.0302	.0262	.0216	.0175	.0140
2	.0168	.0166	.0157	.0144	.0128	.0113
3	.0094	.0094	.0093	.0089	.0084	.0078
4	.0047	.0049	.0050	.0050	.0050	.0048
5	.0014	.0017	.0020	.0022	.0023	.0024
6	−.0010	−.0007	−.0003	.0000	.0003	.0005
7	−.0027	−.0024	−.0020	−.0016	−.0013	−.0010
8	−.0040	−.0038	−.0032	−.0028	−.0024	−.0021
9	−.0048	−.0044	−.0040	−.0036	−.0032	−.0028
10	−.0052	−.0049	−.0044	−.0040	−.0036	−.0032
11	−.0052	−.0049	−.0045	−.0041	−.0037	−.0034
12	−.0050	−.0047	−.0043	−.0040	−.0036	−.0033
13	−.0045	−.0042	−.0039	−.0036	−.0033	−.0030
14	−.0037	−.0035	−.0032	−.0030	−.0028	−.0025
15	−.0028	−.0026	−.0024	−.0022	−.0021	−.0019
16	−.0017	−.0016	−.0015	−.0014	−.0013	−.0012
17	−.0006	−.0006	−.0005	−.0005	−.0004	−.0004

(c) Shear perturbation load about shear panel (0,0)

j	Stringer load, p_{ij}/L, at station—					
	$i=1$	$i=2$	$i=3$	$i=4$	$i=5$	$i=6$
1	−0.3817	−0.2188	−0.1276	−0.0789	−0.0462	−0.0288
2	−.0197	−.0403	−.0427	−.0383	−.0319	−.0256
3	−.0018	−.0064	−.0125	−.0143	−.0145	−.0138
4	.0014	−.0012	−.0033	−.0049	−.0058	−.0063
5	.0027	.0014	.0003	−.0003	−.0016	−.0023
6	.0035	.0027	.0019	.0012	.0006	.0000
7	.0041	.0034	.0029	.0023	.0018	.0014
8	.0044	.0039	.0034	.0030	.0026	.0023
9	.0046	.0042	.0038	.0034	.0030	.0027
10	.0046	.0042	.0039	.0035	.0032	.0029
11	.0045	.0042	.0038	.0035	.0032	.0030
12	.0042	.0039	.0036	.0034	.0031	.0029
13	.0038	.0036	.0033	.0031	.0029	.0026
14	.0033	.0031	.0029	.0027	.0025	.0023
15	.0027	.0025	.0023	.0022	.0020	.0019
16	.0020	.0018	.0017	.0016	.0015	.0014
17	.0012	.0011	.0011	.0010	.0009	.0009
18	.0004	.0004	.0004	.0003	.0003	.0003

j	Shear flow, q_{ij}, at station—					
	$i=0$	$i=1$	$i=2$	$i=3$	$i=4$	$i=5$
0	0.2618	0.1237	0.0782	0.0489	0.0315	0.0209
1	.0253	−.0341	−.0130	−.0028	.0017	.0035
2	.0648	−.0137	−.0105	−.0072	−.0046	−.0027
3	.0664	−.0071	−.0064	−.0054	−.0044	−.0035
4	.0557	−.0045	−.0043	−.0039	−.0034	−.0030
5	.0403	−.0032	−.0031	−.0029	−.0027	−.0024
6	.0353	−.0024	−.0023	−.0022	−.0020	−.0019
7	.0450	−.0017	−.0017	−.0016	−.0015	−.0015
8	.0363	−.0012	−.0012	−.0012	−.0011	−.0011
9	.0270	−.0008	−.0008	−.0008	−.0008	−.0007
10	.0177	−.0004	−.0004	−.0004	−.0004	−.0004
11	.0087	−.0001	−.0001	−.0001	−.0001	−.0002
12	.0002	.0002	.0002	.0002	.0001	.0001
13	−.0074	.0005	.0004	.0004	.0003	.0003
14	−.0140	.0007	.0006	.0006	.0005	.0005
15	−.0194	.0009	.0008	.0007	.0007	.0006
16	−.0234	.0010	.0009	.0009	.0008	.0007
17	−.0258	.0011	.0010	.0009	.0008	.0008
18	−.0256	.0011	.0010	.0010	.0009	.0008

TABLE 5.—LOAD DISTRIBUTION DUE TO A UNIT PERTURBATION LOAD

[$B=1{,}000$; $C=0$; $m=36$]

(a) Concentrated perturbation load on stringer $j=0$ at ring $i=0$

j	Stringer load, p_{ij}, at station—						
	$i=0$	$i=1$	$i=2$	$i=3$	$i=4$	$i=5$	$i=6$
0	0.5000	0.4001	0.3348	0.2876	0.2227	0.1900	0.1537
1	0	.0323	.0530	.0567	.0731	.0769	.0783
2	0	.0084	.0162	.0232	.0290	.0336	.0378
3	0	.0041	.0081	.0119	.0154	.0187	.0216
4	0	.0026	.0051	.0075	.0099	.0121	.0143
5	0	.0018	.0036	.0053	.0070	.0086	.0102
6	0	.0013	.0026	.0039	.0051	.0064	.0075
7	0	.0010	.0019	.0029	.0038	.0047	.0056
8	0	.0007	.0014	.0020	.0027	.0033	.0040
9	0	.0004	.0009	.0013	.0018	.0022	.0026
10	0	.0002	.0004	.0007	.0009	.0012	.0014
11	0	.0000	.0001	.0001	.0002	.0002	.0003
12	0	−.0001	−.0003	−.0004	−.0005	−.0006	−.0006
13	0	−.0003	−.0006	−.0008	−.0010	−.0013	−.0015
14	0	−.0004	−.0008	−.0012	−.0015	−.0019	−.0022
15	0	−.0005	−.0010	−.0015	−.0019	−.0023	−.0027
16	0	−.0006	−.0011	−.0017	−.0022	−.0027	−.0032
17	0	−.0006	−.0012	−.0018	−.0024	−.0029	−.0034
18	0	−.0006	−.0013	−.0018	−.0024	−.0030	−.0035

j	Shear flow, $q_{ij}L$, at station—					
	$i=0$	$i=1$	$i=2$	$i=3$	$i=4$	$i=5$
0	0.0499	0.0377	0.0286	0.0219	0.0169	0.0132
1	.0177	.0170	.0159	.0145	.0131	.0118
2	.0092	.0092	.0090	.0087	.0083	.0079
3	.0051	.0052	.0052	.0051	.0050	.0049
4	.0026	.0027	.0027	.0028	.0028	.0028
5	.0008	.0009	.0010	.0011	.0011	.0012
6	−.0005	−.0004	−.0003	−.0002	−.0001	.0000
7	−.0015	−.0014	−.0012	−.0011	−.0010	−.0009
8	−.0022	−.0020	−.0019	−.0018	−.0016	−.0015
9	−.0026	−.0025	−.0023	−.0022	−.0021	−.0019
10	−.0029	−.0027	−.0026	−.0024	−.0023	−.0022
11	−.0029	−.0028	−.0026	−.0025	−.0024	−.0023
12	−.0028	−.0027	−.0026	−.0025	−.0023	−.0022
13	−.0025	−.0024	−.0023	−.0022	−.0020	−.0020
14	−.0020	−.0020	−.0019	−.0018	−.0017	−.0016
15	−.0015	−.0015	−.0014	−.0014	−.0013	−.0012
16	−.0010	−.0009	−.0009	−.0008	−.0008	−.0008
17	−.0003	−.0003	−.0003	−.0003	−.0003	−.0003

(b) Distributed perturbation load on stringer $j=0$ between rings $i=0$ and $i=1$

j	Stringer load, p_{ij}, at station—					
	$i=1$	$i=2$	$i=3$	$i=4$	$i=5$	$i=6$
0	0.4477	0.3607	0.2949	0.2447	0.2061	0.1763
1	.0173	.0434	.0569	.0698	.0752	.0777
2	.0042	.0124	.0168	.0222	.0315	.0359
3	.0031	.0061	.0100	.0137	.0171	.0203
4	.0013	.0036	.0063	.0087	.0110	.0132
5	.0009	.0027	.0044	.0061	.0078	.0094
6	.0007	.0020	.0032	.0045	.0056	.0070
7	.0005	.0014	.0024	.0033	.0042	.0051
8	.0003	.0010	.0017	.0024	.0030	.0037
9	.0002	.0007	.0011	.0015	.0020	.0024
10	.0001	.0003	.0006	.0008	.0010	.0013
11	.0000	.0000	.0001	.0002	.0002	.0003
12	−.0001	−.0002	−.0003	−.0004	−.0005	−.0006
13	−.0001	−.0004	−.0007	−.0009	−.0012	−.0014
14	−.0002	−.0006	−.0010	−.0014	−.0017	−.0020
15	−.0003	−.0008	−.0012	−.0017	−.0021	−.0025
16	−.0003	−.0009	−.0014	−.0019	−.0024	−.0029
17	−.0003	−.0009	−.0015	−.0021	−.0026	−.0032
18	−.0003	−.0010	−.0016	−.0021	−.0027	−.0033

j	Shear flow, $q_{ij}L$, at station—					
	$i=0$	$i=1$	$i=2$	$i=3$	$i=4$	$i=5$
0	0.0593	0.0435	0.0329	0.0251	0.0193	0.0149
1	.0177	.0174	.0164	.0152	.0138	.0124
2	.0092	.0092	.0091	.0088	.0085	.0081
3	.0051	.0052	.0052	.0051	.0051	.0050
4	.0026	.0026	.0027	.0027	.0028	.0028
5	.0008	.0008	.0009	.0010	.0011	.0012
6	−.0006	−.0005	−.0004	−.0002	−.0001	.0000
7	−.0015	−.0014	−.0013	−.0012	−.0010	−.0009
8	−.0022	−.0021	−.0020	−.0018	−.0017	−.0016
9	−.0027	−.0026	−.0024	−.0023	−.0021	−.0020
10	−.0029	−.0028	−.0026	−.0025	−.0024	−.0022
11	−.0029	−.0028	−.0027	−.0026	−.0024	−.0023
12	−.0028	−.0027	−.0026	−.0024	−.0023	−.0022
13	−.0025	−.0024	−.0023	−.0022	−.0021	−.0020
14	−.0021	−.0020	−.0019	−.0018	−.0018	−.0017
15	−.0016	−.0015	−.0014	−.0014	−.0013	−.0013
16	−.0010	−.0009	−.0009	−.0008	−.0008	−.0008
17	−.0003	−.0003	−.0003	−.0003	−.0003	−.0003

(c) Shear perturbation load about shear panel (0,0)

j	Stringer load, p_{ij}/L, at station—					
	$i=1$	$i=2$	$i=3$	$i=4$	$i=5$	$i=6$
1	−0.4300	−0.3169	−0.2346	−0.1745	−0.1306	−0.0931
2	−.0118	−.0297	−.0388	−.0424	−.0425	−.0406
3	−.0002	−.0043	−.0077	−.0104	−.0124	−.0136
4	.0020	.0006	−.0009	−.0022	−.0033	−.0042
5	.0030	.0022	.0015	.0008	.0002	−.0004
6	.0037	.0033	.0028	.0023	.0019	.0015
7	.0042	.0039	.0035	.0032	.0029	.0026
8	.0045	.0042	.0040	.0037	.0035	.0032
9	.0047	.0045	.0042	.0040	.0038	.0036
10	.0047	.0045	.0043	.0041	.0039	.0037
11	.0046	.0044	.0042	.0040	.0038	.0037
12	.0043	.0041	.0040	.0038	.0036	.0035
13	.0039	.0038	.0036	.0035	.0033	.0032
14	.0034	.0032	.0031	.0030	.0029	.0028
15	.0027	.0026	.0025	.0024	.0024	.0023
16	.0020	.0019	.0019	.0018	.0017	.0017
17	.0012	.0012	.0011	.0011	.0011	.0010
18	.0004	.0004	.0004	.0004	.0004	.0004

j	Shear flow, q_{ij}, at station—					
	$i=0$	$i=1$	$i=2$	$i=3$	$i=4$	$i=5$
0	0.1879	0.0870	0.0368	0.0502	0.0386	0.0299
1	.0479	−.0261	−.0165	−.0099	−.0055	−.0025
2	.0715	−.0062	−.0074	−.0064	−.0054	−.0044
3	.0718	−.0040	−.0030	−.0037	−.0034	−.0031
4	.0678	−.0025	−.0025	−.0024	−.0023	−.0022
5	.0617	−.0018	−.0018	−.0017	−.0017	−.0016
6	.0542	−.0013	−.0013	−.0013	−.0013	−.0012
7	.0458	−.0010	−.0010	−.0009	−.0009	−.0009
8	.0367	−.0007	−.0007	−.0007	−.0007	−.0006
9	.0273	−.0004	−.0004	−.0004	−.0004	−.0004
10	.0179	−.0002	−.0002	−.0002	−.0002	−.0002
11	.0088	.0000	.0000	.0000	−.0001	−.0001
12	.0001	.0001	.0001	.0001	.0001	.0001
13	−.0078	.0003	.0003	.0002	.0002	.0002
14	−.0144	.0004	.0004	.0004	.0003	.0003
15	−.0198	.0005	.0005	.0005	.0004	.0004
16	−.0238	.0006	.0006	.0006	.0006	.0006
17	−.0263	.0006	.0006	.0006	.0006	.0006
18	−.0271	.0006	.0006	.0006	.0006	.0006

TABLE 6.—LOAD DISTRIBUTION DUE TO A UNIT PERTURBATION LOAD

[$H=8$; $C=2\times10^3$; $m=36$]

(a) Concentrated perturbation load on stringer $j=0$ at ring $i=0$

j	Stringer load, p_{ij}, at station—						
	$i=0$	$i=1$	$i=2$	$i=3$	$i=4$	$i=5$	$i=6$
0	0.5000	0.0499	0.0476	0.0461	0.0436	0.0426	0.0421
1	0	.0916	.0600	.0459	.0429	.0421	.0416
2	0	.0628	.0483	.0430	.0413	.0406	.0403
3	0	.0339	.0407	.0396	.0386	.0383	.0381
4	0	.0233	.0331	.0350	.0352	.0352	.0352
5	0	.0166	.0284	.0300	.0312	.0315	.0316
6	0	.0117	.0206	.0250	.0267	.0273	.0276
7	0	.0080	.0156	.0200	.0220	.0227	.0231
8	0	.0051	.0113	.0152	.0172	.0180	.0184
9	0	.0028	.0074	.0107	.0125	.0131	.0135
10	0	.0090	.0040	.0065	.0079	.0084	.0087
11	0	−.0006	.0010	.0026	.0035	.0039	.0041
12	0	−.0017	−.0015	−.0009	−.0005	−.0003	−.0002
13	0	−.0025	−.0037	−.0040	−.0040	−.0040	−.0040
14	0	−.0032	−.0054	−.0065	−.0070	−.0072	−.0073
15	0	−.0036	−.0067	−.0085	−.0095	−.0098	−.0100
16	0	−.0039	−.0076	−.0100	−.0112	−.0117	−.0120
17	0	−.0041	−.0082	−.0109	−.0123	−.0128	−.0132
18	0	−.0042	−.0084	−.0112	−.0127	−.0133	−.0136

j	Shear flow, $q_{ij}L$, at station—					
	$i=0$	$i=1$	$i=2$	$i=3$	$i=4$	$i=5$
0	0.2250	−0.0038	0.0038	0.0013	0.0005	0.0002
1	.1334	.0378	.0099	.0042	.0013	.0007
2	.0806	.0423	.0152	.0061	.0020	.0010
3	.0407	.0356	.0164	.0069	.0023	.0012
4	.0234	.0257	.0145	.0067	.0023	.0012
5	.0008	.0159	.0109	.0056	.0020	.0011
6	−.0049	.0069	.0065	.0038	.0014	.0008
7	−.0129	−.0007	.0022	.0018	.0007	.0004
8	−.0180	−.0069	−.0013	−.0002	−.0001	.0000
9	−.0206	−.0115	−.0061	−.0020	−.0007	−.0003
10	−.0217	−.0145	−.0076	−.0034	−.0012	−.0006
11	−.0213	−.0161	−.0091	−.0044	−.0016	−.0009
12	−.0195	−.0162	−.0093	−.0049	−.0018	−.0010
13	−.0170	−.0151	−.0086	−.0049	−.0018	−.0010
14	−.0133	−.0129	−.0063	−.0043	−.0016	−.0009
15	−.0102	−.0098	−.0065	−.0034	−.0013	−.0007
16	−.0062	−.0062	−.0041	−.0021	−.0008	−.0005
17	−.0021	−.0021	−.0014	−.0007	−.0005	−.0002

(b) Distributed perturbation load on stringer $j=0$ between rings $i=0$ and $i=1$

j	Stringer load, p_{ij}, at station—					
	$i=1$	$i=2$	$i=3$	$i=4$	$i=5$	$i=6$
0	0.1941	0.0583	0.0506	0.0447	0.0430	0.0423
1	.0743	.0648	.0451	.0441	.0423	.0418
2	.0353	.0612	.0453	.0421	.0410	.0404
3	.0201	.0387	.0401	.0390	.0385	.0382
4	.0129	.0293	.0343	.0351	.0352	.0352
5	.0067	.0222	.0295	.0307	.0313	.0316
6	.0058	.0166	.0231	.0250	.0270	.0274
7	.0038	.0121	.0181	.0211	.0224	.0229
8	.0023	.0083	.0134	.0164	.0170	.0182
9	.0010	.0052	.0092	.0117	.0128	.0134
10	.0001	.0024	.0053	.0073	.0081	.0085
11	−.0006	.0009	.0018	.0031	.0037	.0040
12	−.0011	−.0017	−.0012	−.0007	−.0004	−.0002
13	−.0014	−.0032	−.0038	−.0040	−.0040	−.0040
14	−.0016	−.0044	−.0060	−.0068	−.0071	−.0073
15	−.0018	−.0053	−.0077	−.0090	−.0096	−.0099
16	−.0019	−.0059	−.0089	−.0107	−.0114	−.0118
17	−.0020	−.0063	−.0097	−.0117	−.0126	−.0130
18	−.0020	−.0064	−.0099	−.0120	−.0130	−.0134

j	Shear flow, $q_{ij}L$, at station—					
	$i=0$	$i=1$	$i=2$	$i=3$	$i=4$	$i=5$
0	0.3060	0.0079	0.0039	0.0029	0.0006	0.0004
1	.1572	.0778	.0203	.0068	.0025	.0010
2	.0880	.0610	.0263	.0069	.0038	.0010
3	.0494	.0433	.0249	.0110	.0041	.0018
4	.0206	.0270	.0199	.0102	.0039	.0018
5	.0023	.0134	.0135	.0080	.0033	.0016
6	−.0064	.0020	.0071	.0061	.0022	.0012
7	−.0159	−.0067	.0011	.0021	.0010	.0006
8	−.0204	−.0118	−.0040	−.0009	−.0002	.0000
9	−.0224	−.0160	−.0080	−.0024	−.0013	−.0006
10	−.0220	−.0183	−.0109	−.0064	−.0021	−.0010
11	−.0215	−.0190	−.0125	−.0066	−.0027	−.0013
12	−.0194	−.0184	−.0130	−.0072	−.0030	−.0015
13	−.0160	−.0166	−.0123	−.0070	−.0030	−.0016
14	−.0133	−.0130	−.0107	−.0062	−.0027	−.0013
15	−.0097	−.0104	−.0083	−.0049	−.0021	−.0010
16	−.0059	−.0064	−.0052	−.0031	−.0014	−.0007
17	−.0020	−.0022	−.0018	−.0011	−.0005	−.0002

(c) Shear perturbation load about shear panel (0,0)

j	Stringer load, p_{ij}/L, at station—					
	$i=1$	$i=2$	$i=3$	$i=4$	$i=5$	$i=6$
1	−0.1182	0.0067	−0.0020	−0.0002	−0.0001	0.0000
2	−.0348	−.0118	−.0018	−.0010	−.0003	−.0001
3	−.0088	−.0100	−.0043	−.0013	−.0004	−.0002
4	.0005	−.0060	−.0032	−.0014	−.0005	−.0002
5	.0040	−.0020	−.0025	−.0013	−.0005	−.0002
6	.0052	−.0003	−.0016	−.0010	−.0004	−.0002
7	.0053	.0005	−.0007	−.0006	−.0003	−.0001
8	.0045	.0014	.0000	−.0002	−.0001	−.0001
9	.0035	.0019	.0006	.0001	.0000	.0000
10	.0024	.0021	.0010	.0004	.0002	.0001
11	.0014	.0021	.0013	.0007	.0002	.0001
12	.0006	.0019	.0015	.0008	.0003	.0002
13	−.0001	.0017	.0015	.0009	.0003	.0002
14	−.0006	.0014	.0014	.0009	.0003	.0002
15	−.0007	.0011	.0012	.0008	.0003	.0002
16	−.0006	.0008	.0009	.0006	.0002	.0001
17	−.0004	.0004	.0006	.0004	.0001	.0001
18	−.0002	.0001	.0002	.0001	.0000	.0000

j	Shear flow, q_{ij}, at station—					
	$i=0$	$i=1$	$i=2$	$i=3$	$i=4$	$i=5$
0	0.7239	0.1233	0.0064	0.0065	0.0016	0.0008
1	−.0397	−.0016	.0141	.0037	.0015	.0007
2	.0301	−.0246	.0040	.0029	.0008	.0005
3	.0577	−.0234	−.0028	.0009	.0000	.0003
4	.0467	−.0108	−.0060	−.0009	−.0009	.0000
5	.0380	−.0098	−.0060	−.0022	−.0017	−.0002
6	.0281	−.0038	−.0053	−.0026	−.0023	−.0004
7	.0173	.0008	−.0040	−.0029	−.0026	−.0006
8	.0088	.0039	−.0027	−.0027	−.0027	−.0006
9	.0018	.0065	−.0014	−.0022	−.0025	−.0006
10	−.0030	.0059	−.0003	−.0016	−.0024	−.0004
11	−.0068	.0062	.0006	−.0010	−.0019	−.0003
12	−.0069	.0038	.0010	−.0004	−.0014	−.0002
13	−.0067	.0020	.0012	.0002	−.0008	.0000
14	−.0057	.0002	.0012	.0007	−.0002	.0002
15	−.0044	−.0016	.0011	.0011	.0003	.0003
16	−.0032	−.0030	.0010	.0015	.0007	.0004
17	−.0023	−.0038	.0009	.0017	.0010	.0004
18	−.0020	−.0041	.0008	.0018	.0011	.0006

TABLE 7.—LOAD DISTRIBUTION DUE TO A UNIT PERTURBATION LOAD

[$B=30$; $C=2\times10^3$; $m=30$]

(a) Concentrated perturbation load on stringer $j=0$ at ring $i=0$

j	Stringer load, p_{ij}, at station—						
	$i=0$	$i=1$	$i=2$	$i=3$	$i=4$	$i=5$	$i=6$
0	0.8000	0.1521	0.0854	0.0637	0.0541	0.0491	0.0463
1	0	.0870	.0713	.0569	.0519	.0478	.0454
2	0	.0377	.0499	.0485	.0462	.0443	.0420
3	0	.0211	.0332	.0360	.0393	.0394	.0392
4	0	.0137	.0237	.0296	.0339	.0341	.0348
5	0	.0097	.0176	.0232	.0267	.0288	.0300
6	0	.0070	.0133	.0180	.0214	.0238	.0251
7	0	.0061	.0099	.0138	.0167	.0188	.0203
8	0	.0035	.0071	.0100	.0126	.0143	.0156
9	0	.0022	.0046	.0068	.0088	.0100	.0111
10	0	.0011	.0025	.0039	.0051	.0061	.0068
11	0	.0001	.0006	.0013	.0019	.0024	.0029
12	0	−.0008	−.0010	−.0011	−.0010	−.0009	−.0007
13	0	−.0015	−.0025	−.0031	−.0035	−.0037	−.0039
14	0	−.0021	−.0036	−.0048	−.0056	−.0062	−.0066
15	0	−.0025	−.0046	−.0061	−.0073	−.0081	−.0087
16	0	−.0028	−.0052	−.0071	−.0085	−.0095	−.0103
17	0	−.0030	−.0057	−.0077	−.0092	−.0104	−.0112
18	0	−.0031	−.0058	−.0079	−.0095	−.0107	−.0116

j	Shear flow, $q_{ij}L$, at station—					
	$i=0$	$i=1$	$i=2$	$i=3$	$i=4$	$i=5$
0	0.1739	0.0334	0.0108	0.0046	0.0026	0.0014
1	.0589	.0491	.0222	.0118	.0066	.0035
2	.0493	.0378	.0236	.0141	.0085	.0053
3	.0282	.0256	.0189	.0128	.0084	.0054
4	.0145	.0156	.0130	.0098	.0069	.0047
5	.0048	.0077	.0075	.0063	.0048	.0035
6	−.0023	.0018	.0027	.0029	.0026	.0021
7	−.0074	−.0033	−.0012	.0000	.0005	.0006
8	−.0109	−.0069	−.0042	−.0024	−.0013	−.0007
9	−.0131	−.0093	−.0064	−.0042	−.0027	−.0018
10	−.0141	−.0108	−.0078	−.0054	−.0037	−.0025
11	−.0142	−.0113	−.0084	−.0060	−.0042	−.0030
12	−.0134	−.0110	−.0084	−.0061	−.0043	−.0031
13	−.0120	−.0100	−.0077	−.0057	−.0041	−.0030
14	−.0099	−.0085	−.0066	−.0049	−.0035	−.0026
15	−.0074	−.0064	−.0050	−.0037	−.0027	−.0020
16	−.0046	−.0040	−.0031	−.0023	−.0017	−.0013
17	−.0016	−.0013	−.0011	−.0008	−.0006	−.0004

(b) Distributed perturbation load on stringer $j=0$ between rings $i=0$ and $i=1$

j	Stringer load, p_{ij}, at station—					
	$i=1$	$i=2$	$i=3$	$i=4$	$i=5$	$i=6$
0	0.2553	0.1137	0.0731	0.0584	0.0514	0.0476
1	.0806	.0792	.0645	.0561	.0496	.0465
2	.0216	.0449	.0490	.0474	.0452	.0425
3	.0112	.0280	.0361	.0388	.0394	.0393
4	.0071	.0191	.0270	.0313	.0334	.0345
5	.0049	.0139	.0206	.0251	.0278	.0294
6	.0035	.0103	.0158	.0193	.0226	.0244
7	.0025	.0078	.0119	.0153	.0178	.0196
8	.0017	.0053	.0086	.0113	.0134	.0150
9	.0010	.0034	.0058	.0077	.0094	.0106
10	.0005	.0018	.0033	.0045	.0056	.0065
11	.0000	.0003	.0009	.0016	.0022	.0027
12	−.0004	−.0009	−.0011	−.0010	−.0009	−.0008
13	−.0008	−.0020	−.0028	−.0033	−.0036	−.0038
14	−.0011	−.0029	−.0042	−.0052	−.0059	−.0064
15	−.0013	−.0036	−.0054	−.0067	−.0077	−.0084
16	−.0014	−.0041	−.0062	−.0078	−.0091	−.0099
17	−.0015	−.0044	−.0067	−.0085	−.0099	−.0108
18	−.0016	−.0045	−.0069	−.0087	−.0101	−.0112

j	Shear flow, $q_{ij}L$, at station—					
	$i=0$	$i=1$	$i=2$	$i=3$	$i=4$	$i=5$
0	0.2147	0.0383	0.0198	0.0073	0.0035	0.0019
1	.0035	.0677	.0344	.0168	.0080	.0080
2	.0504	.0443	.0304	.0185	.0110	.0066
3	.0280	.0276	.0223	.0157	.0104	.0067
4	.0138	.0155	.0144	.0114	.0083	.0057
5	.0039	.0060	.0077	.0069	.0056	.0041
6	−.0032	−.0001	.0022	.0029	.0028	.0023
7	−.0082	−.0061	−.0021	−.0006	.0003	.0005
8	−.0116	−.0083	−.0064	−.0032	−.0018	−.0010
9	−.0137	−.0112	−.0078	−.0052	−.0035	−.0022
10	−.0146	−.0125	−.0092	−.0064	−.0046	−.0031
11	−.0146	−.0128	−.0098	−.0071	−.0053	−.0036
12	−.0137	−.0123	−.0097	−.0071	−.0053	−.0037
13	−.0122	−.0111	−.0089	−.0066	−.0050	−.0035
14	−.0100	−.0093	−.0075	−.0057	−.0043	−.0030
15	−.0075	−.0070	−.0057	−.0043	−.0033	−.0023
16	−.0046	−.0043	−.0035	−.0027	−.0020	−.0015
17	−.0016	−.0015	−.0013	−.0009	−.0006	−.0005

(c) Shear perturbation load about shear panel (0,0)

j	Stringer load, p_{ij}/L, at station—					
	$i=1$	$i=2$	$i=3$	$i=4$	$i=5$	$i=6$
1	−0.2238	−0.0331	−0.0081	−0.0029	−0.0013	−0.0007
2	−.0364	−.0329	−.0143	−.0064	−.0032	−.0017
3	−.0062	−.0148	−.0110	−.0064	−.0037	−.0022
4	.0011	−.0069	−.0064	−.0048	−.0032	−.0021
5	.0037	−.0017	−.0030	−.0030	−.0022	−.0016
6	.0047	.0006	−.0000	−.0013	−.0012	−.0010
7	.0049	.0018	.0004	−.0001	−.0004	−.0004
8	.0047	.0026	.0014	.0007	.0003	.0000
9	.0043	.0030	.0020	.0012	.0008	.0004
10	.0036	.0031	.0023	.0015	.0011	.0007
11	.0029	.0031	.0024	.0017	.0012	.0009
12	.0022	.0030	.0024	.0018	.0013	.0009
13	.0016	.0027	.0023	.0017	.0013	.0009
14	.0011	.0023	.0020	.0015	.0011	.0009
15	.0007	.0019	.0016	.0013	.0010	.0007
16	.0004	.0014	.0012	.0009	.0007	.0006
17	.0002	.0008	.0007	.0006	.0004	.0004
18	.0000	.0003	.0002	.0002	.0002	.0001

j	Shear flow, q_{ij}, at station—					
	$i=0$	$i=1$	$i=2$	$i=3$	$i=4$	$i=5$
0	0.8271	0.1659	0.0390	0.0147	0.0070	0.0038
1	−.0264	−.0247	.0140	.0095	.0064	.0031
2	.0473	−.0283	−.0048	.0017	.0031	.0016
3	.0593	−.0196	−.0034	−.0028	−.0006	.0001
4	.0676	−.0126	−.0030	−.0043	−.0022	−.0010
5	.0602	−.0072	−.0006	−.0045	−.0028	−.0015
6	.0403	−.0031	−.0051	−.0040	−.0029	−.0018
7	.0309	.0000	−.0038	−.0034	−.0027	−.0018
8	.0214	.0022	−.0026	−.0027	−.0022	−.0015
9	.0139	.0034	−.0016	−.0020	−.0018	−.0012
10	.0057	.0039	−.0007	−.0013	−.0013	−.0009
11	−.0001	.0037	.0000	−.0006	−.0007	−.0006
12	−.0046	.0029	.0006	.0000	−.0002	−.0001
13	−.0078	.0018	.0010	.0006	.0003	.0002
14	−.0100	.0006	.0013	.0010	.0008	.0006
15	−.0114	−.0006	.0015	.0013	.0011	.0007
16	−.0122	−.0016	.0016	.0016	.0014	.0009
17	−.0126	−.0022	.0017	.0018	.0016	.0010
18	−.0127	−.0024	.0017	.0018	.0016	.0010

TABLE 8.—LOAD DISTRIBUTION DUE TO A UNIT PERTURBATION LOAD

[$B=100$; $C=2\times10^3$; $m=36$]

(a) Concentrated perturbation load on stringer $j=0$ at ring $i=0$

	Stringer load, p_{ij}, at station—						
	$i=0$	$i=1$	$i=2$	$i=3$	$i=4$	$i=5$	$i=6$
0	0.5000	0.2548	0.1523	0.1062	0.0835	0.0692	0.0611
1	0	.0599	.0300	.0780	.0678	.0615	.0566
2	0	.0341	.0391	.0460	.0483	.0484	.0475
3	0	.0194	.0235	.0297	.0342	.0369	.0383
4	0	.0079	.0149	.0206	.0250	.0283	.0306
5	0	.0065	.0108	.0151	.0180	.0219	.0243
6	0	.0041	.0079	.0113	.0144	.0170	.0191
7	0	.0030	.0058	.0084	.0108	.0129	.0147
8	0	.0021	.0042	.0061	.0079	.0095	.0109
9	0	.0014	.0028	.0040	.0053	.0064	.0075
10	0	.0007	.0015	.0022	.0030	.0037	.0044
11	0	.0002	.0004	.0006	.0009	.0012	.0015
12	0	−.0004	−.0006	−.0008	−.0009	−.0010	−.0010
13	0	−.0008	−.0015	−.0021	−.0025	−.0029	−.0032
14	0	−.0012	−.0023	−.0032	−.0039	−.0045	−.0050
15	0	−.0015	−.0029	−.0040	−.0050	−.0058	−.0065
16	0	−.0018	−.0033	−.0046	−.0058	−.0068	−.0076
17	0	−.0019	−.0036	−.0050	−.0063	−.0074	−.0083
18	0	−.0020	−.0037	−.0052	−.0064	−.0076	−.0085

j	Shear flow, $q_{ij}L$, at station—					
	$i=0$	$i=1$	$i=2$	$i=3$	$i=4$	$i=5$
0	0.1226	0.0510	0.0233	0.0119	0.0066	0.0041
1	.0527	.0429	.0253	.0191	.0129	.0089
2	.0256	.0259	.0214	.0163	.0129	.0098
3	.0162	.0157	.0142	.0123	.0102	.0083
4	.0083	.0087	.0085	.0079	.0070	.0060
5	.0028	.0036	.0040	.0041	.0040	.0036
6	−.0013	−.0002	.0006	.0011	.0014	.0015
7	−.0043	−.0030	−.0020	−.0013	−.0007	−.0003
8	−.0064	−.0051	−.0040	−.0031	−.0023	−.0018
9	−.0078	−.0064	−.0053	−.0043	−.0035	−.0028
10	−.0085	−.0072	−.0060	−.0050	−.0042	−.0035
11	−.0087	−.0074	−.0063	−.0053	−.0045	−.0038
12	−.0083	−.0071	−.0061	−.0052	−.0044	−.0038
13	−.0074	−.0064	−.0055	−.0048	−.0041	−.0035
14	−.0062	−.0054	−.0047	−.0040	−.0034	−.0030
15	−.0047	−.0041	−.0035	−.0030	−.0026	−.0022
16	−.0029	−.0025	−.0022	−.0019	−.0016	−.0014
17	−.0010	−.0009	−.0007	−.0006	−.0006	−.0006

(b) Distributed perturbation load on stringer $j=0$ between rings $i=0$ and $i=1$

j	Stringer load, p_{ij}, at station—					
	$i=1$	$i=2$	$i=3$	$i=4$	$i=5$	$i=6$
0	0.3600	0.1972	0.1268	0.0932	0.0753	0.0648
1	.0428	.0770	.0779	.0714	.0645	.0589
2	.0127	.0394	.0431	.0474	.0485	.0480
3	.0063	.0177	.0264	.0321	.0357	.0377
4	.0040	.0115	.0179	.0229	.0267	.0296
5	.0028	.0081	.0129	.0170	.0204	.0231
6	.0020	.0060	.0096	.0129	.0157	.0181
7	.0015	.0044	.0072	.0097	.0119	.0138
8	.0011	.0032	.0061	.0070	.0087	.0102
9	.0007	.0021	.0034	.0047	.0059	.0070
10	.0004	.0011	.0019	.0026	.0033	.0040
11	.0001	.0002	.0005	.0003	.0011	.0014
12	−.0002	−.0005	−.0007	−.0009	−.0010	−.0010
13	−.0004	−.0012	−.0018	−.0023	−.0027	−.0030
14	−.0006	−.0018	−.0027	−.0035	−.0042	−.0048
15	−.0008	−.0022	−.0035	−.0045	−.0054	−.0062
16	−.0009	−.0030	−.0040	−.0052	−.0063	−.0072
17	−.0010	−.0028	−.0043	−.0057	−.0065	−.0078
18	−.0010	−.0028	−.0044	−.0058	−.0070	−.0030

j	Shear flow, $q_{ij}L$, at station—					
	$i=0$	$i=1$	$i=2$	$i=3$	$i=4$	$i=5$
0	0.1400	0.0814	0.0382	0.0165	0.0090	0.0052
1	.0543	.0472	.0348	.0234	.0158	.0108
2	.0289	.0275	.0237	.0191	.0148	.0113
3	.0162	.0161	.0151	.0133	.0112	.0092
4	.0082	.0086	.0087	.0082	.0074	.0066
5	.0020	.0022	.0029	.0041	.0040	.0038
6	−.0015	−.0007	.0002	.0008	.0012	.0014
7	−.0045	−.0036	−.0025	−.0010	−.0010	−.0006
8	−.0066	−.0057	−.0045	−.0035	−.0027	−.0020
9	−.0080	−.0071	−.0058	−.0048	−.0029	−.0031
10	−.0087	−.0078	−.0066	−.0045	−.0040	−.0038
11	−.0089	−.0080	−.0068	−.0058	−.0049	−.0041
12	−.0085	−.0077	−.0066	−.0056	−.0048	−.0041
13	−.0076	−.0069	−.0060	−.0041	−.0044	−.0038
14	−.0064	−.0056	−.0060	−.0043	−.0037	−.0033
15	−.0048	−.0044	−.0038	−.0033	−.0038	−.0024
16	−.0030	−.0027	−.0024	−.0020	−.0018	−.0016
17	−.0010	−.0009	−.0008	−.0007	−.0006	−.0006

(c) Shear perturbation load about shear panel (0, 0)

j	Stringer load, p_{ij}/L, at station—					
	$i=1$	$i=2$	$i=3$	$i=4$	$i=5$	$i=6$
1	−0.3166	−0.1198	−0.0485	−0.0214	−0.0103	−0.0056
2	−.0283	−.0433	−.0325	−.0227	−.0148	−.0097
3	−.0035	−.0120	−.0147	−.0133	−.0107	−.0083
4	.0014	−.0034	−.0057	−.0064	−.0062	−.0054
5	.0032	.0001	−.0015	−.0025	−.0029	−.0029
6	.0041	.0018	.0006	−.0002	−.0008	−.0011
7	.0045	.0028	.0019	.0011	.0006	.0002
8	.0046	.0034	.0026	.0020	.0015	.0010
9	.0045	.0037	.0031	.0024	.0020	.0016
10	.0042	.0039	.0033	.0027	.0023	.0019
11	.0039	.0038	.0033	.0028	.0024	.0020
12	.0034	.0036	.0032	.0028	.0024	.0020
13	.0029	.0032	.0029	.0025	.0022	.0019
14	.0024	.0028	.0026	.0022	.0019	.0017
15	.0019	.0023	.0020	.0018	.0016	.0014
16	.0013	.0017	.0015	.0014	.0012	.0010
17	.0008	.0010	.0009	.0008	.0007	.0006
18	.0003	.0003	.0003	.0003	.0002	.0002

j	Shear flow, q_{ij}, at station—					
	$i=0$	$i=1$	$i=2$	$i=3$	$i=4$	$i=5$
0	0.3868	0.1601	0.0703	0.0337	0.0179	0.0104
1	.0290	−.0367	−.0010	.0065	.0063	.0066
2	.0566	−.0217	−.0107	−.0043	−.0010	.0005
3	.0657	−.0126	−.0087	−.0058	−.0035	−.0020
4	.0630	−.0078	−.0004	−.0041	−.0038	−.0027
5	.0566	−.0047	−.0048	−.0041	−.0034	−.0027
6	.0485	−.0025	−.0036	−.0033	−.0028	−.0024
7	.0395	−.0008	−.0027	−.0025	−.0022	−.0020
8	.0303	.0004	−.0019	−.0019	−.0017	−.0016
9	.0213	.0013	−.0013	−.0013	−.0012	−.0011
10	.0128	.0016	−.0006	−.0008	−.0007	−.0007
11	.0050	.0016	−.0001	−.0003	−.0003	−.0003
12	−.0019	.0015	.0003	.0001	.0001	.0000
13	−.0077	.0011	.0006	.0005	.0004	.0003
14	−.0125	.0007	.0009	.0008	.0007	.0006
15	−.0162	.0002	.0012	.0011	.0009	.0008
16	−.0189	−.0001	.0013	.0012	.0011	.0009
17	−.0197	−.0004	.0014	.0013	.0012	.0010
18	−.0202	−.0005	.0015	.0014	.0012	.0010

TABLE 9.—LOAD DISTRIBUTION DUE TO A UNIT PERTURBATION LOAD

[B=300; C=2×10³; m=36]

(a) Concentrated perturbation load on stringer j=0 at ring i=0

j	Stringer load, p_{ij}, at station—						
	i=0	i=1	i=2	i=3	i=4	i=5	i=6
0	0.5000	0.3364	0.2266	0.1756	0.1870	0.1116	0.0945
1	0	.0506	.0716	.0782	.0781	.0762	.0713
2	0	.0149	.0271	.0359	.0417	.0453	.0472
3	0	.0074	.0142	.0201	.0250	.0290	.0320
4	0	.0046	.0091	.0132	.0168	.0201	.0228
5	0	.0032	.0064	.0094	.0121	.0147	.0170
6	0	.0024	.0047	.0069	.0090	.0110	.0128
7	0	.0018	.0035	.0051	.0067	.0083	.0096
8	0	.0012	.0025	.0036	.0048	.0059	.0070
9	0	.0008	.0016	.0024	.0033	.0039	.0046
10	0	.0004	.0008	.0013	.0017	.0021	.0025
11	0	.0001	.0002	.0003	.0004	.0006	.0007
12	0	−.0002	−.0004	−.0006	−.0007	−.0008	−.0009
13	0	−.0005	−.0010	−.0014	−.0017	−.0021	−.0023
14	0	−.0007	−.0014	−.0020	−.0026	−.0031	−.0035
15	0	−.0009	−.0018	−.0025	−.0032	−.0039	−.0045
16	0	−.0010	−.0020	−.0029	−.0037	−.0045	−.0052
17	0	−.0011	−.0022	−.0031	−.0040	−.0048	−.0056
18	0	−.0012	−.0022	−.0032	−.0041	−.0050	−.0057

j	Shear flow, $q_{ij}L$, at station—					
	i=0	i=1	i=2	i=3	i=4	i=5
0	0.0333	0.0494	0.0305	0.0193	0.0127	0.0086
1	.0317	.0234	.0239	.0194	.0156	.0128
2	.0168	.0163	.0151	.0136	.0120	.0106
3	.0094	.0094	.0092	.0087	.0081	.0075
4	.0048	.0050	.0051	.0050	.0049	.0047
5	.0015	.0018	.0021	.0022	.0024	.0024
6	−.0009	−.0006	−.0001	.0002	.0004	.0006
7	−.0026	−.0022	−.0018	−.0014	−.0011	−.0009
8	−.0039	−.0034	−.0030	−.0026	−.0022	−.0019
9	−.0047	−.0042	−.0038	−.0034	−.0030	−.0026
10	−.0051	−.0046	−.0042	−.0038	−.0034	−.0031
11	−.0052	−.0047	−.0043	−.0039	−.0036	−.0032
12	−.0049	−.0045	−.0041	−.0038	−.0035	−.0032
13	−.0044	−.0041	−.0037	−.0034	−.0032	−.0029
14	−.0037	−.0034	−.0031	−.0029	−.0026	−.0024
15	−.0028	−.0026	−.0024	−.0022	−.0020	−.0018
16	−.0017	−.0016	−.0015	−.0014	−.0012	−.0011
17	−.0006	−.0005	−.0005	−.0005	−.0004	−.0004

(b) Distributed perturbation load on stringer j=0 between rings i=0 and i=1

j	Stringer load, p_{ij}, at station—					
	i=1	i=2	i=3	i=4	i=5	i=6
0	0.4106	0.2820	0.2038	0.1549	0.1234	0.1036
1	.0288	.0528	.0787	.0785	.0708	.0733
2	.0076	.0213	.0318	.0390	.0436	.0464
3	.0037	.0109	.0172	.0227	.0271	.0305
4	.0023	.0069	.0111	.0150	.0185	.0215
5	.0016	.0048	.0079	.0106	.0134	.0163
6	.0012	.0036	.0058	.0080	.0100	.0119
7	.0009	.0026	.0043	.0059	.0074	.0089
8	.0006	.0018	.0031	.0042	.0054	.0064
9	.0004	.0012	.0020	.0028	.0036	.0043
10	.0003	.0006	.0010	.0015	.0019	.0024
11	.0000	.0001	.0002	.0003	.0005	.0006
12	−.0001	−.0004	−.0005	−.0007	−.0008	−.0009
13	−.0003	−.0007	−.0012	−.0016	−.0019	−.0022
14	−.0004	−.0011	−.0017	−.0023	−.0028	−.0033
15	−.0005	−.0014	−.0022	−.0029	−.0036	−.0042
16	−.0005	−.0015	−.0025	−.0033	−.0041	−.0048
17	−.0006	−.0017	−.0027	−.0036	−.0044	−.0053
18	−.0006	−.0017	−.0027	−.0037	−.0040	−.0054

j	Shear flow, $q_{ij}L$, at station—					
	i=0	i=1	i=2	i=3	i=4	i=5
0	0.0392	0.0044	0.0391	0.0244	0.0157	0.0104
1	.0320	.0302	.0238	.0216	.0175	.0140
2	.0168	.0166	.0157	.0144	.0128	.0113
3	.0094	.0094	.0093	.0089	.0084	.0078
4	.0047	.0049	.0050	.0050	.0050	.0048
5	.0014	.0017	.0020	.0022	.0023	.0024
6	−.0010	−.0007	−.0003	.0000	.0003	.0006
7	−.0027	−.0024	−.0020	−.0016	−.0013	−.0010
8	−.0040	−.0036	−.0032	−.0028	−.0024	−.0021
9	−.0048	−.0044	−.0040	−.0035	−.0032	−.0028
10	−.0052	−.0049	−.0044	−.0040	−.0036	−.0032
11	−.0052	−.0049	−.0045	−.0041	−.0037	−.0034
12	−.0050	−.0047	−.0043	−.0040	−.0035	−.0033
13	−.0045	−.0042	−.0039	−.0036	−.0033	−.0030
14	−.0037	−.0035	−.0033	−.0030	−.0028	−.0025
15	−.0028	−.0026	−.0024	−.0023	−.0021	−.0019
16	−.0017	−.0016	−.0015	−.0014	−.0013	−.0012
17	−.0006	−.0006	−.0005	−.0005	−.0004	−.0004

(c) Shear perturbation load about shear panel (0,0)

j	Stringer load, p_{ij}/L, at station—					
	i=1	i=2	i=3	i=4	i=5	i=6
1	−0.3817	−0.2188	−0.1276	−0.0759	−0.0462	−0.0288
2	−.0195	−.0402	−.0427	−.0383	−.0319	−.0256
3	−.0010	−.0034	−.0125	−.0148	−.0145	−.0138
4	.0017	−.0012	−.0033	−.0049	−.0058	−.0063
5	.0031	.0014	.0002	−.0008	−.0010	−.0022
6	.0038	.0027	.0019	.0012	.0008	.0000
7	.0043	.0034	.0029	.0023	.0018	.0014
8	.0046	.0039	.0034	.0030	.0026	.0022
9	.0046	.0043	.0038	.0034	.0030	.0027
10	.0045	.0043	.0039	.0035	.0032	.0029
11	.0043	.0042	.0038	.0035	.0032	.0030
12	.0040	.0039	.0036	.0034	.0031	.0029
13	.0035	.0036	.0033	.0031	.0029	.0026
14	.0029	.0031	.0029	.0027	.0025	.0023
15	.0024	.0025	.0023	.0022	.0020	.0019
16	.0018	.0019	.0017	.0016	.0015	.0014
17	.0011	.0011	.0011	.0010	.0009	.0009
18	.0004	.0004	.0004	.0003	.0003	.0003

j	Shear flow, q_{ij}, at station—					
	i=0	i=1	i=2	i=3	i=4	i=5
0	0.2639	0.1277	0.0783	0.0489	0.0315	0.0209
1	.0272	−.0351	−.0130	−.0025	.0017	.0035
2	.0663	−.0144	−.0105	−.0073	−.0046	−.0027
3	.0094	−.0070	−.0064	−.0064	−.0064	−.0065
4	.0569	−.0047	−.0043	−.0039	−.0034	−.0030
5	.0528	−.0030	−.0031	−.0029	−.0027	−.0024
6	.0521	−.0018	−.0023	−.0023	−.0020	−.0019
7	.0434	−.0009	−.0017	−.0016	−.0015	−.0015
8	.0343	−.0003	−.0012	−.0012	−.0011	−.0011
9	.0251	.0002	−.0008	−.0008	−.0008	−.0007
10	.0160	.0004	−.0004	−.0004	−.0004	−.0004
11	.0073	.0006	−.0001	−.0001	−.0001	−.0002
12	−.0006	.0006	.0002	.0001	.0001	.0001
13	−.0077	.0006	.0004	.0004	.0003	.0003
14	−.0137	.0005	.0006	.0006	.0005	.0005
15	−.0185	.0004	.0008	.0007	.0007	.0006
16	−.0220	.0003	.0009	.0008	.0008	.0007
17	−.0241	.0002	.0010	.0009	.0008	.0008
18	−.0248	.0002	.0010	.0010	.0009	.0008

TABLE 10.—LOAD DISTRIBUTION DUE TO A UNIT PERTURBATION LOAD

[$B = 1{,}000$; $C = 2 \times 10^6$; $m = 36$]

(a) Concentrated perturbation load on stringer $j=0$ at ring $i=0$

j	Stringer load, p_{ij}, at station—						
	$i=0$	$i=1$	$i=2$	$i=3$	$i=4$	$i=5$	$i=6$
0	0.5000	0.4001	0.3248	0.2676	0.2237	0.1900	0.1637
1	0	.0223	.0630	.0657	.0731	.0769	.0783
2	0	.0034	.0102	.0232	.0290	.0338	.0378
3	0	.0041	.0081	.0119	.0154	.0187	.0216
4	0	.0026	.0051	.0075	.0099	.0121	.0143
5	0	.0018	.0036	.0053	.0070	.0086	.0102
6	0	.0013	.0026	.0039	.0051	.0064	.0076
7	0	.0010	.0019	.0029	.0038	.0047	.0056
8	0	.0007	.0014	.0020	.0027	.0033	.0040
9	0	.0004	.0009	.0013	.0018	.0023	.0026
10	0	.0002	.0004	.0007	.0009	.0012	.0014
11	0	.0000	.0001	.0001	.0002	.0002	.0003
12	0	−.0001	−.0003	−.0004	−.0006	−.0006	−.0006
13	0	−.0003	−.0006	−.0008	−.0010	−.0013	−.0015
14	0	−.0004	−.0008	−.0013	−.0015	−.0019	−.0023
15	0	−.0005	−.0010	−.0015	−.0019	−.0023	−.0027
16	0	−.0006	−.0011	−.0017	−.0023	−.0027	−.0032
17	0	−.0006	−.0012	−.0018	−.0024	−.0029	−.0034
18	0	−.0006	−.0013	−.0018	−.0024	−.0030	−.0035

j	Shear flow, $q_{ij}L$, at station—					
	$i=0$	$i=1$	$i=2$	$i=3$	$i=4$	$i=5$
0	0.0490	0.0377	0.0286	0.0219	0.0160	0.0132
1	.0177	.0170	.0159	.0145	.0131	.0118
2	.0092	.0092	.0090	.0087	.0083	.0079
3	.0061	.0062	.0062	.0061	.0060	.0059
4	.0026	.0027	.0027	.0028	.0028	.0028
5	.0008	.0009	.0010	.0011	.0011	.0012
6	−.0006	−.0004	−.0003	−.0003	−.0001	.0000
7	−.0015	−.0014	−.0012	−.0011	−.0010	−.0009
8	−.0022	−.0020	−.0019	−.0018	−.0016	−.0015
9	−.0026	−.0025	−.0023	−.0023	−.0021	−.0019
10	−.0029	−.0027	−.0026	−.0024	−.0023	−.0022
11	−.0029	−.0028	−.0026	−.0025	−.0024	−.0022
12	−.0028	−.0026	−.0025	−.0024	−.0023	−.0022
13	−.0025	−.0024	−.0022	−.0023	−.0020	−.0020
14	−.0020	−.0020	−.0019	−.0018	−.0017	−.0016
15	−.0015	−.0015	−.0014	−.0014	−.0013	−.0012
16	−.0010	−.0009	−.0009	−.0008	−.0008	−.0008
17	−.0003	−.0003	−.0003	−.0003	−.0003	−.0003

(b) Distributed perturbation load on stringer $j=0$ between rings $i=0$ and $i=1$

j	Stringer load, p_{ij}, at station—					
	$i=1$	$i=2$	$i=3$	$i=4$	$i=5$	$i=6$
0	0.4477	0.3607	0.2949	0.2447	0.2061	0.1763
1	.0173	.0434	.0569	.0628	.0752	.0777
2	.0043	.0124	.0198	.0262	.0315	.0359
3	.0021	.0061	.0100	.0137	.0171	.0203
4	.0013	.0038	.0063	.0087	.0110	.0132
5	.0009	.0027	.0044	.0061	.0078	.0094
6	.0007	.0020	.0032	.0045	.0058	.0070
7	.0005	.0014	.0024	.0033	.0042	.0051
8	.0003	.0010	.0017	.0024	.0030	.0037
9	.0002	.0007	.0011	.0015	.0020	.0024
10	.0001	.0003	.0006	.0008	.0010	.0013
11	.0000	.0000	.0001	.0002	.0002	.0003
12	−.0001	−.0003	−.0003	−.0004	−.0005	−.0006
13	−.0001	−.0004	−.0007	−.0009	−.0012	−.0014
14	−.0002	−.0006	−.0010	−.0014	−.0017	−.0020
15	−.0003	−.0008	−.0012	−.0017	−.0021	−.0025
16	−.0003	−.0009	−.0014	−.0019	−.0024	−.0029
17	−.0003	−.0009	−.0015	−.0021	−.0026	−.0032
18	−.0003	−.0010	−.0016	−.0021	−.0027	−.0032

j	Shear flow, $q_{ij}L$, at station—					
	$i=0$	$i=1$	$i=2$	$i=3$	$i=4$	$i=5$
0	0.0523	0.0435	0.0329	0.0261	0.0193	0.0149
1	.0177	.0174	.0164	.0152	.0138	.0124
2	.0092	.0092	.0091	.0088	.0085	.0081
3	.0061	.0062	.0062	.0061	.0061	.0059
4	.0026	.0026	.0027	.0027	.0028	.0028
5	.0008	.0008	.0009	.0010	.0011	.0012
6	−.0006	−.0005	−.0004	−.0002	−.0001	.0000
7	−.0015	−.0014	−.0013	−.0012	−.0010	−.0009
8	−.0022	−.0021	−.0020	−.0018	−.0017	−.0016
9	−.0027	−.0026	−.0024	−.0023	−.0021	−.0020
10	−.0029	−.0028	−.0026	−.0025	−.0024	−.0022
11	−.0029	−.0028	−.0027	−.0026	−.0024	−.0023
12	−.0028	−.0027	−.0026	−.0024	−.0023	−.0022
13	−.0025	−.0024	−.0023	−.0022	−.0021	−.0020
14	−.0021	−.0020	−.0019	−.0018	−.0018	−.0017
15	−.0016	−.0015	−.0014	−.0014	−.0013	−.0013
16	−.0010	−.0009	−.0009	−.0008	−.0008	−.0003
17	−.0003	−.0003	−.0003	−.0003	−.0003	−.0003

(c) Shear perturbation load about shear panel (0,0)

j	Stringer load, p_{ij}/L, at station—					
	$i=1$	$i=2$	$i=3$	$i=4$	$i=5$	$i=6$
1	−0.4300	−0.3169	−0.2346	−0.1745	−0.1305	−0.0981
2	−.0117	−.0297	−.0388	−.0434	−.0425	−.0406
3	.0000	−.0043	−.0077	−.0104	−.0124	−.0136
4	.0021	.0006	−.0009	−.0022	−.0033	−.0042
5	.0031	.0023	.0015	.0008	.0002	−.0004
6	.0038	.0033	.0028	.0023	.0019	.0015
7	.0043	.0039	.0035	.0032	.0029	.0026
8	.0046	.0043	.0040	.0037	.0035	.0032
9	.0047	.0045	.0042	.0040	.0038	.0036
10	.0047	.0045	.0043	.0041	.0039	.0037
11	.0045	.0044	.0042	.0040	.0038	.0037
12	.0042	.0041	.0040	.0038	.0036	.0035
13	.0038	.0037	.0036	.0035	.0033	.0032
14	.0033	.0032	.0031	.0030	.0029	.0028
15	.0026	.0026	.0025	.0024	.0024	.0023
16	.0019	.0019	.0019	.0018	.0017	.0017
17	.0013	.0012	.0011	.0011	.0011	.0010
18	.0004	.0004	.0004	.0004	.0004	.0004

j	Shear flow, q_{ij}, at station—					
	$i=0$	$i=1$	$i=2$	$i=3$	$i=4$	$i=5$
0	0.1885	0.0867	0.0658	0.0503	0.0386	0.0299
1	.0485	−.0264	−.0166	−.0090	−.0055	−.0025
2	.0720	−.0084	−.0074	−.0064	−.0054	−.0044
3	.0721	−.0042	−.0039	−.0037	−.0034	−.0031
4	.0678	−.0026	−.0025	−.0024	−.0023	−.0022
5	.0615	−.0017	−.0015	−.0017	−.0017	−.0016
6	.0539	−.0011	−.0013	−.0013	−.0012	−.0012
7	.0453	−.0007	−.0009	−.0010	−.0009	−.0009
8	.0363	−.0004	−.0007	−.0007	−.0007	−.0006
9	.0267	−.0001	−.0004	−.0004	−.0004	−.0004
10	.0174	.0000	−.0002	−.0002	−.0003	−.0002
11	.0083	.0002	.0000	−.0001	−.0001	−.0001
12	.0001	.0003	.0001	.0001	.0001	.0001
13	−.0077	.0003	.0003	.0002	.0002	.0002
14	−.0143	.0004	.0004	.0004	.0003	.0003
15	−.0196	.0004	.0005	.0004	.0004	.0004
16	−.0234	.0004	.0005	.0005	.0006	.0006
17	−.0258	.0004	.0000	.0006	.0006	.0006
18	−.0266	.0004	.0000	.0006	.0006	.0006

TABLE 11.—LOAD DISTRIBUTION DUE TO A UNIT PERTURBATION LOAD

[$B = 8$; $C = 2 \times 10^3$; $m = 36$]

(a) Concentrated perturbation load on stringer $j=0$ at ring $i=0$

j	Stringer load, p_{ij}, at station—						
	$i=0$	$i=1$	$i=2$	$i=3$	$i=4$	$i=5$	$i=6$
0	0.5000	0.0558	0.0520	0.0488	0.0448	0.0426	0.0421
1	0	.0969	.0543	.0485	.0441	.0421	.0416
2	0	.0553	.0617	.0452	.0424	.0407	.0403
3	0	.0352	.0429	.0410	.0394	.0384	.0381
4	0	.0236	.0337	.0357	.0356	.0353	.0352
5	0	.0140	.0253	.0297	.0311	.0316	.0310
6	0	.0081	.0181	.0237	.0263	.0273	.0270
7	0	.0040	.0121	.0178	.0210	.0227	.0231
8	0	.0014	.0072	.0124	.0159	.0179	.0184
9	0	−.0002	.0033	.0076	.0109	.0129	.0135
10	0	−.0012	.0004	.0038	.0063	.0082	.0087
11	0	−.0017	−.0017	.0001	.0022	.0036	.0041
12	0	−.0019	−.0021	−.0025	−.0014	−.0004	−.0002
13	0	−.0020	−.0029	−.0040	−.0044	−.0042	−.0040
14	0	−.0020	−.0044	−.0060	−.0066	−.0072	−.0073
15	0	−.0021	−.0046	−.0070	−.0087	−.0097	−.0100
16	0	−.0021	−.0047	−.0076	−.0100	−.0114	−.0120
17	0	−.0021	−.0048	−.0080	−.0107	−.0120	−.0132
18	0	−.0021	−.0048	−.0081	−.0110	−.0128	−.0136

j	Shear flow, $q_{ij}L$, at station—					
	$i=0$	$i=1$	$i=2$	$i=3$	$i=4$	$i=5$
0	0.2231	−0.0031	0.0066	0.0030	0.0011	0.0003
1	.1252	.0296	.0122	.0064	.0031	.0007
2	.0659	.0443	.0188	.0093	.0048	.0011
3	.0337	.0307	.0205	.0109	.0058	.0014
4	.0112	.0255	.0184	.0109	.0061	.0015
5	−.0028	.0141	.0141	.0095	.0056	.0015
6	−.0109	.0040	.0086	.0070	.0044	.0013
7	−.0149	−.0040	.0029	.0038	.0028	.0009
8	−.0163	−.0097	−.0024	.0004	.0008	.0006
9	−.0161	−.0132	−.0068	−.0029	−.0012	−.0003
10	−.0149	−.0148	−.0100	−.0057	−.0031	−.0007
11	−.0132	−.0147	−.0118	−.0077	−.0045	−.0013
12	−.0113	−.0136	−.0123	−.0088	−.0055	−.0016
13	−.0093	−.0117	−.0117	−.0089	−.0057	−.0018
14	−.0073	−.0093	−.0101	−.0081	−.0053	−.0017
15	−.0053	−.0067	−.0077	−.0064	−.0043	−.0014
16	−.0031	−.0040	−.0049	−.0041	−.0028	−.0009
17	−.0011	−.0013	−.0017	−.0014	−.0009	−.0004

(b) Distributed perturbation load on stringer $j=0$ between rings $i=0$ and $i=1$

j	Stringer load, p_{ij}, at station—					
	$i=1$	$i=2$	$i=3$	$i=4$	$i=5$	$i=6$
0	0.1983	0.0635	0.0540	0.0467	0.0435	0.0423
1	.0780	.0593	.0514	.0460	.0431	.0418
2	.0375	.0548	.0480	.0437	.0414	.0404
3	.0207	.0406	.0420	.0402	.0389	.0382
4	.0119	.0293	.0350	.0357	.0355	.0352
5	.0006	.0204	.0279	.0306	.0314	.0310
6	.0033	.0135	.0212	.0251	.0268	.0274
7	.0012	.0082	.0152	.0190	.0220	.0229
8	.0001	.0042	.0099	.0143	.0169	.0183
9	−.0006	.0013	.0065	.0094	.0121	.0134
10	−.0008	−.0007	.0019	.0050	.0072	.0086
11	−.0009	−.0019	−.0009	.0012	.0031	.0040
12	−.0009	−.0027	−.0029	−.0020	−.0010	−.0002
13	−.0009	−.0031	−.0043	−.0045	−.0042	−.0040
14	−.0009	−.0033	−.0053	−.0065	−.0071	−.0073
15	−.0010	−.0033	−.0059	−.0079	−.0092	−.0099
16	−.0010	−.0033	−.0062	−.0089	−.0108	−.0118
17	−.0010	−.0033	−.0064	−.0094	−.0116	−.0130
18	−.0010	−.0033	−.0064	−.0096	−.0121	−.0134

j	Shear flow, $q_{ij}L$, at station—					
	$i=0$	$i=1$	$i=2$	$i=3$	$i=4$	$i=5$
0	0.3017	0.0674	0.0047	0.0037	0.0016	0.0006
1	.1457	.0761	.0225	.0091	.0040	.0019
2	.0700	.0589	.0293	.0134	.0068	.0028
3	.0293	.0390	.0379	.0153	.0081	.0036
4	.0065	.0216	.0323	.0145	.0083	.0038
5	−.0077	.0078	.0148	.0115	.0075	.0036
6	−.0143	−.0026	.0071	.0060	.0057	.0030
7	−.0163	−.0095	.0001	.0036	.0033	.0020
8	−.0169	−.0136	−.0057	−.0007	.0007	.0008
9	−.0158	−.0155	−.0099	−.0046	−.0020	−.0005
10	−.0142	−.0156	−.0126	−.0077	−.0042	−.0018
11	−.0124	−.0146	−.0135	−.0097	−.0061	−.0028
12	−.0106	−.0128	−.0133	−.0107	−.0071	−.0036
13	−.0088	−.0106	−.0121	−.0105	−.0074	−.0038
14	−.0070	−.0082	−.0100	−.0093	−.0067	−.0037
15	−.0051	−.0058	−.0075	−.0073	−.0054	−.0030
16	−.0031	−.0035	−.0046	−.0046	−.0035	−.0020
17	−.0011	−.0012	−.0016	−.0015	−.0012	−.0006

(c) Shear perturbation load about shear panel (0,0)

j	Stringer load, p_{ij}/L, at station—					
	$i=1$	$i=2$	$i=3$	$i=4$	$i=5$	$i=6$
1	−0.1165	0.0067	−0.0020	−0.0002	−.0002	−0.0001
2	−.0301	−.0116	−.0018	−.0011	−.0005	−.0003
3	−.0026	−.0034	−.0033	−.0014	−.0008	−.0004
4	.0063	−.0048	−.0031	−.0016	−.0009	−.0005
5	.0083	−.0013	−.0022	−.0015	−.0009	−.0006
6	.0072	.0011	−.0011	−.0011	−.0008	−.0005
7	.0060	.0022	−.0001	−.0007	−.0006	−.0004
8	.0027	.0027	.0006	−.0002	−.0003	−.0003
9	.0008	.0024	.0011	.0003	.0000	−.0001
10	−.0005	.0018	.0013	.0006	.0002	.0001
11	−.0011	.0011	.0012	.0008	.0005	.0003
12	−.0012	.0004	.0010	.0009	.0006	.0004
13	−.0010	−.0001	.0006	.0009	.0006	.0006
14	−.0007	−.0005	.0005	.0008	.0006	.0005
15	−.0004	−.0006	.0002	.0007	.0007	.0005
16	−.0002	−.0003	.0001	.0005	.0005	.0004
17	−.0001	−.0004	.0000	.0003	.0003	.0003
18	.0000	−.0001	.0000	.0001	.0001	.0001

j	Shear flow, q_{ij}, at station—					
	$i=0$	$i=1$	$i=2$	$i=3$	$i=4$	$i=5$
0	0.7534	0.1124	0.0026	0.0041	0.0016	0.0010
1	−.0137	−.0108	.0112	.0023	.0016	.0010
2	.0464	−.0293	.0014	.0016	.0010	.0007
3	.0517	−.0226	−.0049	−.0001	.0004	.0004
4	.0390	−.0113	−.0067	−.0017	−.0003	.0000
5	.0224	−.0018	−.0057	−.0024	−.0008	−.0003
6	.0081	.0043	−.0036	−.0024	−.0012	−.0006
7	−.0019	.0070	−.0012	−.0019	−.0012	−.0008
8	−.0072	.0070	.0009	−.0010	−.0011	−.0008
9	−.0067	.0064	.0022	−.0003	−.0008	−.0008
10	−.0078	.0031	.0027	.0005	−.0004	−.0007
11	−.0067	.0009	.0026	.0009	−.0001	−.0005
12	−.0033	−.0007	.0020	.0010	.0002	−.0002
13	−.0013	−.0016	.0011	.0009	.0003	.0000
14	.0000	−.0018	.0001	.0006	.0004	.0002
15	.0006	−.0016	−.0007	.0001	.0004	.0004
16	.0012	−.0012	−.0014	−.0003	.0004	.0005
17	.0014	−.0008	−.0018	−.0006	.0004	.0006
18	.0014	−.0007	−.0020	−.0006	.0003	.0006

TABLE 12.—LOAD DISTRIBUTION DUE TO A UNIT PERTURBATION LOAD

[$B=30$; $C=2\times10^3$; $n=36$]

(a) Concentrated perturbation load on stringer $j=0$ at ring $i=0$

j	Stringer load, p_{ij}, at station—						
	$i=0$	$i=1$	$i=2$	$i=3$	$i=4$	$i=5$	$i=6$
0	0.5000	0.1538	0.0869	0.0648	0.0547	0.0494	0.0463
1	0	.0885	.0727	.0599	.0525	.0481	.0454
2	0	.0387	.0601	.0493	.0467	.0445	.0429
3	0	.0216	.0339	.0385	.0397	.0396	.0392
4	0	.0137	.0229	.0298	.0328	.0342	.0348
5	0	.0091	.0172	.0229	.0266	.0287	.0300
6	0	.0061	.0124	.0175	.0211	.0235	.0251
7	0	.0039	.0087	.0129	.0162	.0186	.0203
8	0	.0023	.0067	.0091	.0119	.0140	.0156
9	0	.0011	.0043	.0063	.0080	.0097	.0111
10	0	.0001	.0013	.0029	.0045	.0057	.0068
11	0	−.0006	−.0003	.0005	.0014	.0022	.0029
12	0	−.0011	−.0016	−.0016	−.0013	−.0010	−.0007
13	0	−.0015	−.0026	−.0032	−.0036	−.0038	−.0039
14	0	−.0017	−.0033	−.0046	−.0055	−.0061	−.0066
15	0	−.0019	−.0039	−.0056	−.0070	−.0080	−.0087
16	0	−.0021	−.0043	−.0063	−.0080	−.0093	−.0103
17	0	−.0021	−.0045	−.0068	−.0086	−.0101	−.0112
18	0	−.0021	−.0046	−.0069	−.0088	−.0104	−.0116

j	Shear flow, $q_{ij}L$, at station—					
	$i=0$	$i=1$	$i=2$	$i=3$	$i=4$	$i=5$
0	0.1731	0.0334	0.0111	0.0060	0.0027	0.0015
1	.0846	.0493	.0239	.0125	.0070	.0042
2	.0459	.0380	.0247	.0151	.0092	.0059
3	.0243	.0267	.0200	.0139	.0093	.0063
4	.0106	.0155	.0141	.0110	.0079	.0057
5	.0015	.0074	.0084	.0073	.0058	.0044
6	−.0046	.0011	.0034	.0037	.0033	.0028
7	−.0085	−.0037	−.0003	.0004	.0009	.0011
8	−.0106	−.0071	−.0042	−.0033	−.0012	−.0005
9	−.0119	−.0094	−.0067	−.0045	−.0030	−.0019
10	−.0120	−.0108	−.0083	−.0060	−.0042	−.0030
11	−.0115	−.0109	−.0090	−.0069	−.0050	−.0037
12	−.0104	−.0104	−.0091	−.0071	−.0053	−.0040
13	−.0089	−.0094	−.0084	−.0067	−.0051	−.0040
14	−.0072	−.0078	−.0071	−.0058	−.0045	−.0035
15	−.0053	−.0058	−.0054	−.0045	−.0035	−.0028
16	−.0032	−.0036	−.0034	−.0028	−.0022	−.0017
17	−.0011	−.0012	−.0011	−.0009	−.0008	−.0006

(b) Distributed perturbation load on stringer $j=0$ between rings $i=0$ and $i=1$

j	Stringer load, p_{ij}, at station—					
	$i=1$	$i=2$	$i=3$	$i=4$	$i=5$	$i=6$
0	0.2363	0.1144	0.0744	0.0592	0.0517	0.0476
1	.0616	.0807	.0658	.0559	.0502	.0465
2	.0222	.0461	.0600	.0480	.0456	.0435
3	.0115	.0286	.0397	.0393	.0396	.0393
4	.0070	.0192	.0271	.0315	.0337	.0345
5	.0045	.0134	.0203	.0249	.0275	.0294
6	.0029	.0093	.0151	.0194	.0225	.0244
7	.0018	.0063	.0109	.0146	.0173	.0190
8	.0010	.0040	.0074	.0105	.0130	.0150
9	.0004	.0021	.0046	.0069	.0089	.0106
10	.0000	.0007	.0021	.0037	.0050	.0065
11	−.0004	−.0005	.0001	.0009	.0018	.0027
12	−.0006	−.0014	−.0016	−.0015	−.0012	−.0008
13	−.0007	−.0021	−.0029	−.0034	−.0033	−.0038
14	−.0009	−.0025	−.0040	−.0051	−.0058	−.0064
15	−.0009	−.0029	−.0048	−.0063	−.0075	−.0084
16	−.0010	−.0032	−.0053	−.0072	−.0087	−.0099
17	−.0010	−.0033	−.0057	−.0077	−.0093	−.0106
18	−.0010	−.0034	−.0058	−.0079	−.0098	−.0112

j	Shear flow, $q_{ij}L$, at station—					
	$i=0$	$i=1$	$i=2$	$i=3$	$i=4$	$i=5$
0	0.2137	0.0880	0.0200	0.0076	0.0038	0.0020
1	.0906	.0669	.0349	.0175	.0094	.0057
2	.0451	.0431	.0310	.0195	.0119	.0078
3	.0231	.0290	.0229	.0169	.0116	.0080
4	.0091	.0138	.0150	.0128	.0093	.0073
5	.0000	.0049	.0081	.0080	.0067	.0054
6	−.0066	−.0015	.0024	.0037	.0035	.0025
7	−.0094	−.0060	−.0022	−.0001	.0008	.0012
8	−.0113	−.0090	−.0067	−.0031	−.0017	−.0007
9	−.0121	−.0108	−.0081	−.0065	−.0038	−.0024
10	−.0120	−.0115	−.0095	−.0071	−.0061	−.0038
11	−.0113	−.0114	−.0101	−.0070	−.0060	−.0047
12	−.0102	−.0106	−.0099	−.0081	−.0062	−.0050
13	−.0087	−.0093	−.0090	−.0076	−.0069	−.0050
14	−.0070	−.0076	−.0076	−.0065	−.0052	−.0044
15	−.0051	−.0056	−.0057	−.0060	−.0040	−.0035
16	−.0031	−.0034	−.0035	−.0031	−.0029	−.0022
17	−.0010	−.0011	−.0012	−.0010	−.0009	−.0007

(c) Shear perturbation load about shear panel (0,0)

j	Stringer load, p_{ij}/L, at station—					
	$i=1$	$i=2$	$i=3$	$i=4$	$i=5$	$i=6$
1	−0.2234	−0.0326	−0.0081	−0.0030	−0.0012	−0.0007
2	−.0326	−.0221	−.0142	−.0065	−.0033	−.0017
3	−.0011	−.0138	−.0108	−.0067	−.0039	−.0022
4	.0065	−.0042	−.0060	−.0050	−.0033	−.0021
5	.0085	.0002	−.0026	−.0030	−.0023	−.0016
6	.0081	.0024	−.0004	−.0014	−.0013	−.0010
7	.0067	.0034	.0010	−.0002	−.0004	−.0004
8	.0049	.0036	.0018	.0007	.0003	.0000
9	.0030	.0034	.0022	.0013	.0008	.0004
10	.0014	.0029	.0023	.0017	.0012	.0007
11	.0002	.0022	.0023	.0019	.0013	.0009
12	−.0006	.0015	.0020	.0019	.0013	.0009
13	−.0011	.0009	.0017	.0018	.0013	.0009
14	−.0012	.0004	.0014	.0016	.0011	.0009
15	−.0012	.0001	.0011	.0013	.0010	.0007
16	−.0009	−.0001	.0007	.0010	.0008	.0006
17	−.0006	−.0001	.0004	.0006	.0004	.0003
18	−.0002	−.0001	.0001	.0002	.0002	.0001

j	Shear flow, q_{ij}, at station—					
	$i=0$	$i=1$	$i=2$	$i=3$	$i=4$	$i=5$
0	0.5569	0.1502	0.0349	0.0121	0.0069	0.0038
1	.0017	−.0333	.0101	.0080	.0052	.0033
2	.0669	−.0338	−.0078	.0004	.0019	.0018
3	.0691	−.0214	−.0106	−.0037	−.0008	.0002
4	.0560	−.0105	−.0098	−.0047	−.0024	−.0009
5	.0390	−.0023	−.0059	−.0043	−.0030	−.0017
6	.0237	.0034	−.0031	−.0033	−.0030	−.0019
7	.0123	.0058	−.0006	−.0022	−.0027	−.0020
8	−.0005	.0080	.0013	−.0011	−.0023	−.0017
9	−.0060	.0077	.0024	−.0003	−.0018	−.0012
10	−.0094	.0062	.0030	.0005	−.0011	−.0007
11	−.0093	.0043	.0029	.0009	−.0004	−.0004
12	−.0085	.0021	.0023	.0010	.0003	−.0001
13	−.0063	.0002	.0015	.0009	.0007	.0003
14	−.0038	−.0015	.0004	.0007	.0011	.0005
15	−.0015	−.0027	−.0006	.0004	.0013	.0007
16	.0004	−.0035	−.0014	.0003	.0014	.0008
17	.0010	−.0040	−.0020	.0000	.0010	.0009
18	.0020	−.0041	−.0023	.0000	.0010	.0010

TABLE 18.—LOAD DISTRIBUTION DUE TO A UNIT PERTURBATION LOAD

[B=100; C=2×10⁴; m=36]

(a) Concentrated perturbation load on stringer $j=0$ at ring $i=0$

j	Stringer load, p_{ij}, at station—						
	$i=0$	$i=1$	$i=2$	$i=3$	$i=4$	$i=5$	$i=6$
0	0.5000	0.2551	0.1532	0.1064	0.0826	0.0692	0.0611
1	0	.0702	.0803	.0782	.0679	.0615	.0586
2	0	.0943	.0394	.0462	.0484	.0484	.0475
3	0	.0126	.0227	.0293	.0343	.0369	.0383
4	0	.0079	.0149	.0207	.0251	.0283	.0306
5	0	.0054	.0108	.0151	.0189	.0219	.0243
6	0	.0039	.0077	.0112	.0143	.0170	.0191
7	0	.0027	.0056	.0083	.0107	.0129	.0147
8	0	.0018	.0039	.0059	.0077	.0095	.0109
9	0	.0011	.0025	.0038	.0051	.0064	.0075
10	0	.0006	.0013	.0020	.0028	.0037	.0044
11	0	−.0001	.0001	.0004	.0008	.0012	.0015
12	0	−.0006	−.0008	−.0010	−.0010	−.0010	−.0010
13	0	−.0009	−.0016	−.0021	−.0025	−.0029	−.0032
14	0	−.0012	−.0022	−.0031	−.0039	−.0046	−.0050
15	0	−.0014	−.0027	−.0039	−.0049	−.0058	−.0065
16	0	−.0016	−.0031	−.0045	−.0056	−.0066	−.0076
17	0	−.0017	−.0033	−.0048	−.0061	−.0074	−.0083
18	0	−.0017	−.0034	−.0049	−.0063	−.0076	−.0086

j	Shear flow, $q_{ij}L$, at station—					
	$i=0$	$i=1$	$i=2$	$i=3$	$i=4$	$i=5$
0	0.1224	0.0510	0.0234	0.0119	0.0066	0.0041
1	.0622	.0410	.0284	.0192	.0130	.0089
2	.0379	.0269	.0216	.0170	.0130	.0098
3	.0153	.0158	.0144	.0124	.0104	.0083
4	.0074	.0088	.0087	.0080	.0071	.0060
5	.0020	.0036	.0042	.0043	.0040	.0036
6	−.0019	−.0002	.0007	.0012	.0014	.0015
7	−.0046	−.0031	−.0020	−.0012	−.0007	−.0003
8	−.0065	−.0051	−.0040	−.0031	−.0024	−.0018
9	−.0076	−.0065	−.0053	−.0044	−.0036	−.0028
10	−.0081	−.0072	−.0061	−.0051	−.0044	−.0035
11	−.0081	−.0074	−.0064	−.0054	−.0047	−.0038
12	−.0075	−.0071	−.0062	−.0054	−.0047	−.0038
13	−.0066	−.0064	−.0057	−.0049	−.0044	−.0035
14	−.0055	−.0053	−.0048	−.0043	−.0037	−.0030
15	−.0041	−.0040	−.0036	−.0032	−.0028	−.0022
16	−.0025	−.0025	−.0022	−.0020	−.0017	−.0014
17	−.0008	−.0008	−.0006	−.0007	−.0005	−.0006

(b) Distributed perturbation load on stringer $j=0$ between rings $i=0$ and $i=1$

j	Stringer load, p_{ij}, at station—					
	$i=1$	$i=2$	$i=3$	$i=4$	$i=5$	$i=6$
0	0.3803	0.1976	0.1271	0.0933	0.0753	0.0648
1	.0430	.0773	.0781	.0715	.0645	.0589
2	.0129	.0327	.0433	.0476	.0485	.0480
3	.0064	.0179	.0265	.0332	.0357	.0377
4	.0040	.0115	.0179	.0230	.0287	.0296
5	.0027	.0081	.0129	.0170	.0204	.0231
6	.0019	.0058	.0095	.0128	.0157	.0181
7	.0013	.0042	.0070	.0095	.0119	.0138
8	.0009	.0029	.0049	.0068	.0087	.0102
9	.0005	.0018	.0031	.0045	.0059	.0070
10	.0002	.0008	.0016	.0024	.0033	.0040
11	−.0001	.0000	.0003	.0006	.0011	.0014
12	−.0003	−.0007	−.0009	−.0010	−.0010	−.0010
13	−.0004	−.0012	−.0019	−.0024	−.0027	−.0030
14	−.0006	−.0017	−.0027	−.0035	−.0042	−.0048
15	−.0007	−.0021	−.0033	−.0044	−.0054	−.0062
16	−.0008	−.0023	−.0038	−.0051	−.0063	−.0072
17	−.0008	−.0025	−.0041	−.0055	−.0068	−.0078
18	−.0008	−.0025	−.0042	−.0056	−.0070	−.0080

j	Shear flow, $q_{ij}L$, at station—					
	$i=0$	$i=1$	$i=2$	$i=3$	$i=4$	$i=5$
0	0.1397	0.0513	0.0352	0.0180	0.0090	0.0053
1	.0536	.0470	.0344	.0235	.0150	.0108
2	.0279	.0272	.0238	.0192	.0149	.0113
3	.0150	.0157	.0152	.0135	.0113	.0092
4	.0070	.0082	.0083	.0084	.0075	.0065
5	.0016	.0029	.0039	.0043	.0042	.0038
6	−.0023	−.0010	.0002	.0010	.0014	.0014
7	−.0050	−.0039	−.0025	−.0016	−.0009	−.0006
8	−.0068	−.0058	−.0046	−.0035	−.0027	−.0020
9	−.0078	−.0071	−.0059	−.0048	−.0040	−.0031
10	−.0082	−.0077	−.0067	−.0056	−.0048	−.0038
11	−.0081	−.0078	−.0070	−.0059	−.0052	−.0041
12	−.0076	−.0074	−.0067	−.0058	−.0051	−.0041
13	−.0066	−.0066	−.0061	−.0052	−.0047	−.0038
14	−.0055	−.0055	−.0051	−.0046	−.0039	−.0032
15	−.0041	−.0041	−.0039	−.0034	−.0029	−.0024
16	−.0025	−.0026	−.0024	−.0021	−.0018	−.0015
17	−.0009	−.0009	−.0008	−.0007	−.0006	−.0005

(c) Shear perturbation load about shear panel (0,0)

j	Stringer load, p_{ij}/L, at station—					
	$i=1$	$i=2$	$i=3$	$i=4$	$i=5$	$i=6$
1	−0.3168	−0.1196	−0.0485	−0.0214	−0.0103	−0.0055
2	−.0260	−.0428	−.0335	−.0227	−.0148	−.0097
3	−.0001	−.0110	−.0146	−.0133	−.0107	−.0083
4	.0062	−.0020	−.0056	−.0065	−.0062	−.0054
5	.0060	.0011	−.0013	−.0026	−.0029	−.0029
6	.0072	.0028	.0008	−.0003	−.0006	−.0011
7	.0066	.0030	.0020	.0011	.0006	.0002
8	.0056	.0039	.0027	.0020	.0015	.0010
9	.0043	.0039	.0031	.0025	.0020	.0016
10	.0030	.0037	.0033	.0028	.0023	.0019
11	.0019	.0033	.0032	.0029	.0024	.0020
12	.0009	.0029	.0031	.0028	.0024	.0020
13	.0001	.0023	.0028	.0026	.0022	.0019
14	−.0003	.0019	.0024	.0023	.0019	.0017
15	−.0006	.0014	.0019	.0019	.0016	.0014
16	−.0006	.0009	.0014	.0014	.0012	.0010
17	−.0004	.0006	.0009	.0009	.0007	.0006
18	−.0002	.0003	.0003	.0003	.0002	.0002

j	Shear flow, q_{ij}, at station—					
	$i=0$	$i=1$	$i=2$	$i=3$	$i=4$	$i=5$
0	0.2011	0.1517	0.0679	0.0231	0.0178	0.0104
1	.0220	−.0444	−.0232	.0060	.0067	.0056
2	.0745	−.0275	−.0126	−.0048	−.0011	.0005
3	.0747	−.0157	−.0099	−.0061	−.0036	−.0020
4	.0642	−.0079	−.0068	−.0053	−.0038	−.0027
5	.0504	−.0020	−.0044	−.0040	−.0034	−.0027
6	.0381	.0024	−.0024	−.0030	−.0029	−.0024
7	.0250	.0054	−.0006	−.0021	−.0023	−.0020
8	.0117	.0071	.0004	−.0013	−.0017	−.0015
9	.0030	.0075	.0013	−.0007	−.0013	−.0011
10	−.0031	.0063	.0016	−.0002	−.0007	−.0007
11	−.0065	.0054	.0017	.0002	−.0001	−.0003
12	−.0086	.0034	.0015	.0006	.0002	.0000
13	−.0085	.0012	.0011	.0006	.0006	.0003
14	−.0082	−.0010	.0006	.0007	.0008	.0006
15	−.0070	−.0029	.0000	.0007	.0010	.0008
16	−.0059	−.0045	−.0004	.0006	.0011	.0009
17	−.0051	−.0054	−.0007	.0006	.0012	.0010
18	−.0048	−.0055	−.0008	.0006	.0013	.0010

TABLE 14.—LOAD DISTRIBUTION DUE TO A UNIT PERTURBATION LOAD

[$B=300$; $C=2\times10^6$; $m=36$]

(a) Concentrated perturbation load on stringer $j=0$ at ring $i=0$

j	Stringer load, p_{ij}, at station—						
	$i=0$	$i=1$	$i=2$	$i=3$	$i=4$	$i=5$	$i=6$
0	0.5000	0.3354	0.2386	0.1756	0.1370	0.1110	0.0945
1	0	.0606	.0716	.0782	.0781	.0752	.0713
2	0	.0149	.0271	.0369	.0417	.0453	.0472
3	0	.0074	.0142	.0201	.0280	.0290	.0320
4	0	.0046	.0091	.0132	.0166	.0201	.0223
5	0	.0032	.0064	.0094	.0121	.0147	.0170
6	0	.0024	.0047	.0069	.0090	.0110	.0128
7	0	.0018	.0035	.0051	.0067	.0082	.0096
8	0	.0013	.0025	.0036	.0048	.0059	.0070
9	0	.0008	.0016	.0024	.0032	.0039	.0046
10	0	.0001	.0008	.0013	.0017	.0021	.0026
11	0	.0001	.0002	.0003	.0004	.0006	.0007
12	0	−.0002	−.0004	−.0006	−.0007	−.0008	−.0009
13	0	−.0005	−.0010	−.0014	−.0017	−.0021	−.0023
14	0	−.0007	−.0014	−.0020	−.0026	−.0031	−.0035
15	0	−.0009	−.0018	−.0025	−.0032	−.0039	−.0045
16	0	−.0010	−.0020	−.0029	−.0037	−.0045	−.0052
17	0	−.0011	−.0022	−.0031	−.0040	−.0048	−.0056
18	0	−.0012	−.0023	−.0033	−.0041	−.0050	−.0057

j	Shear flow, $q_{ij}L$, at station—					
	$i=0$	$i=1$	$i=2$	$i=3$	$i=4$	$i=5$
0	0.0323	0.0494	0.0305	0.0193	0.0127	0.0066
1	.0317	.0284	.0239	.0194	.0156	.0125
2	.0168	.0162	.0151	.0130	.0120	.0106
3	.0094	.0094	.0092	.0087	.0081	.0075
4	.0048	.0060	.0061	.0060	.0049	.0047
5	.0015	.0018	.0021	.0022	.0024	.0024
6	−.0009	−.0005	−.0001	.0002	.0004	.0006
7	−.0020	−.0022	−.0018	−.0014	−.0011	−.0009
8	−.0039	−.0034	−.0030	−.0026	−.0022	−.0019
9	−.0047	−.0042	−.0038	−.0034	−.0030	−.0026
10	−.0051	−.0046	−.0042	−.0038	−.0034	−.0031
11	−.0052	−.0047	−.0043	−.0039	−.0036	−.0032
12	−.0049	−.0045	−.0041	−.0038	−.0035	−.0032
13	−.0044	−.0041	−.0037	−.0034	−.0033	−.0029
14	−.0037	−.0034	−.0031	−.0029	−.0026	−.0024
15	−.0028	−.0026	−.0024	−.0022	−.0020	−.0018
16	−.0017	−.0016	−.0015	−.0014	−.0012	−.0011
17	−.0006	−.0006	−.0005	−.0005	−.0004	−.0004

(b) Distributed perturbation load on stringer $j=0$ between rings $i=0$ and $i=1$

j	Stringer load, p_{ij}, at station—					
	$i=1$	$i=2$	$i=3$	$i=4$	$i=5$	$i=6$
0	0.4103	0.2320	0.2038	0.1549	0.1234	0.1026
1	.0266	.0528	.0757	.0785	.0768	.0733
2	.0076	.0213	.0318	.0390	.0436	.0464
3	.0037	.0109	.0172	.0227	.0271	.0305
4	.0023	.0069	.0111	.0150	.0185	.0215
5	.0016	.0045	.0079	.0108	.0134	.0158
6	.0012	.0036	.0058	.0080	.0100	.0119
7	.0009	.0026	.0043	.0059	.0074	.0089
8	.0006	.0018	.0031	.0042	.0054	.0064
9	.0004	.0012	.0020	.0028	.0035	.0043
10	.0002	.0006	.0010	.0015	.0019	.0024
11	.0000	.0001	.0002	.0003	.0006	.0006
12	−.0001	−.0004	−.0006	−.0007	−.0008	−.0009
13	−.0003	−.0007	−.0012	−.0016	−.0019	−.0022
14	−.0004	−.0011	−.0017	−.0023	−.0028	−.0033
15	−.0005	−.0014	−.0022	−.0029	−.0036	−.0042
16	−.0005	−.0015	−.0025	−.0033	−.0041	−.0048
17	−.0006	−.0017	−.0027	−.0036	−.0044	−.0052
18	−.0006	−.0017	−.0027	−.0037	−.0046	−.0054

j	Shear flow, $q_{ij}L$, at station—					
	$i=0$	$i=1$	$i=2$	$i=3$	$i=4$	$i=5$
0	0.0893	0.0644	0.0391	0.0244	0.0157	0.0104
1	.0320	.0302	.0262	.0210	.0175	.0140
2	.0168	.0166	.0157	.0144	.0128	.0113
3	.0094	.0094	.0093	.0089	.0084	.0078
4	.0047	.0049	.0050	.0050	.0050	.0048
5	.0014	.0017	.0020	.0022	.0023	.0024
6	−.0010	−.0007	−.0003	.0000	.0003	.0005
7	−.0027	−.0024	−.0020	−.0016	−.0013	−.0010
8	−.0040	−.0036	−.0032	−.0028	−.0024	−.0021
9	−.0048	−.0044	−.0040	−.0036	−.0032	−.0028
10	−.0052	−.0049	−.0044	−.0040	−.0036	−.0032
11	−.0052	−.0049	−.0045	−.0041	−.0037	−.0034
12	−.0050	−.0047	−.0043	−.0040	−.0036	−.0033
13	−.0045	−.0043	−.0039	−.0036	−.0033	−.0030
14	−.0037	−.0035	−.0033	−.0030	−.0028	−.0025
15	−.0028	−.0026	−.0024	−.0023	−.0021	−.0019
16	−.0017	−.0016	−.0015	−.0014	−.0013	−.0012
17	−.0006	−.0006	−.0006	−.0006	−.0004	−.0004

(c) Shear perturbation load about shear panel (0,0)

j	Stringer load, p_{ij}/L, at station—					
	$i=1$	$i=2$	$i=3$	$i=4$	$i=5$	$i=6$
1	−0.3812	−0.2188	−0.1276	−0.0759	−0.0402	−0.0286
2	−.0183	−.0401	−.0427	−.0363	−.0319	−.0256
3	.0003	−.0032	−.0125	−.0143	−.0145	−.0138
4	.0039	−.0009	−.0033	−.0049	−.0058	−.0063
5	.0052	.0017	.0002	−.0009	−.0016	−.0022
6	.0057	.0030	.0019	.0012	.0006	.0000
7	.0057	.0037	.0029	.0023	.0018	.0014
8	.0053	.0041	.0035	.0030	.0026	.0022
9	.0047	.0042	.0038	.0034	.0030	.0027
10	.0040	.0042	.0039	.0035	.0032	.0029
11	.0032	.0040	.0038	.0035	.0032	.0030
12	.0024	.0037	.0036	.0034	.0031	.0029
13	.0018	.0033	.0033	.0031	.0029	.0028
14	.0012	.0028	.0029	.0027	.0025	.0023
15	.0008	.0022	.0023	.0022	.0020	.0019
16	.0005	.0016	.0017	.0016	.0015	.0014
17	.0002	.0010	.0011	.0010	.0009	.0009
18	.0001	.0003	.0004	.0003	.0003	.0003

j	Shear flow, q_{ij}, at station—					
	$i=0$	$i=1$	$i=2$	$i=3$	$i=4$	$i=5$
0	0.2765	0.1222	0.0775	0.0488	0.0315	0.0209
1	.0359	−.0402	−.0127	−.0029	.0017	.0036
2	.0756	−.0184	−.0111	−.0073	−.0046	−.0027
3	.0749	−.0100	−.0068	−.0056	−.0044	−.0035
4	.0671	−.0051	−.0044	−.0039	−.0034	−.0030
5	.0607	−.0016	−.0029	−.0029	−.0027	−.0024
6	.0453	.0012	−.0019	−.0021	−.0020	−.0019
7	.0339	.0032	−.0011	−.0015	−.0015	−.0015
8	.0233	.0044	−.0005	−.0011	−.0011	−.0011
9	.0139	.0049	.0000	−.0007	−.0006	−.0007
10	.0000	.0047	.0003	−.0003	−.0004	−.0004
11	−.0004	.0039	.0005	.0000	−.0001	−.0002
12	−.0053	.0026	.0006	.0002	.0001	.0001
13	−.0058	.0011	.0006	.0004	.0003	.0003
14	−.0113	−.0006	.0005	.0006	.0005	.0006
15	−.0129	−.0020	.0004	.0007	.0007	.0008
16	−.0133	−.0031	.0003	.0008	.0008	.0007
17	−.0143	−.0039	.0003	.0008	.0008	.0008
18	−.0144	−.0042	.0003	.0008	.0009	.0008

TABLE 15.—LOAD DISTRIBUTION DUE TO A UNIT PERTURBATION LOAD

[B=1,000; C=2×10⁴; m=36]

(a) Concentrated perturbation load on stringer $j=0$ at ring $i=0$

j	Stringer load, p_{ij}, at station—						
	$i=0$	$i=1$	$i=2$	$i=3$	$i=4$	$i=5$	$i=6$
0	0.5000	0.4001	0.3248	0.2676	0.2237	0.1900	0.1637
1	0	.0323	.0450	.0557	.0731	.0799	.0783
2	0	.0084	.0162	.0222	.0290	.0338	.0378
3	0	.0041	.0081	.0119	.0154	.0187	.0216
4	0	.0026	.0051	.0075	.0099	.0121	.0143
5	0	.0018	.0036	.0053	.0070	.0086	.0102
6	0	.0013	.0026	.0039	.0051	.0064	.0075
7	0	.0010	.0020	.0029	.0038	.0047	.0056
8	0	.0007	.0014	.0020	.0027	.0033	.0040
9	0	.0004	.0009	.0013	.0018	.0022	.0026
10	0	.0002	.0004	.0007	.0009	.0012	.0014
11	0	.0000	.0001	.0001	.0002	.0002	.0003
12	0	−.0001	−.0003	−.0004	−.0006	−.0006	−.0008
13	0	−.0003	−.0006	−.0008	−.0010	−.0013	−.0015
14	0	−.0004	−.0008	−.0012	−.0015	−.0019	−.0022
15	0	−.0006	−.0010	−.0015	−.0019	−.0023	−.0027
16	0	−.0006	−.0011	−.0017	−.0022	−.0027	−.0032
17	0	−.0006	−.0012	−.0018	−.0024	−.0029	−.0034
18	0	−.0006	−.0013	−.0018	−.0024	−.0030	−.0035

j	Shear flow, $q_{ij}L$, at station—					
	$i=0$	$i=1$	$i=2$	$i=3$	$i=4$	$i=5$
0	0.0499	0.0377	0.0288	0.0219	0.0169	0.0132
1	.0177	.0170	.0159	.0145	.0131	.0118
2	.0092	.0092	.0090	.0087	.0083	.0079
3	.0061	.0062	.0063	.0061	.0060	.0049
4	.0026	.0027	.0027	.0028	.0028	.0028
5	.0008	.0009	.0010	.0011	.0011	.0012
6	−.0005	−.0004	−.0003	−.0002	−.0001	−.0000
7	−.0015	−.0014	−.0012	−.0011	−.0010	−.0009
8	−.0022	−.0020	−.0019	−.0018	−.0016	−.0015
9	−.0026	−.0025	−.0023	−.0022	−.0021	−.0019
10	−.0029	−.0027	−.0026	−.0024	−.0023	−.0022
11	−.0029	−.0028	−.0026	−.0025	−.0024	−.0022
12	−.0028	−.0028	−.0025	−.0024	−.0023	−.0022
13	−.0025	−.0024	−.0022	−.0022	−.0020	−.0020
14	−.0020	−.0020	−.0019	−.0018	−.0017	−.0016
15	−.0016	−.0015	−.0014	−.0014	−.0013	−.0012
16	−.0010	−.0009	−.0009	−.0008	−.0008	−.0008
17	−.0003	−.0003	−.0003	−.0003	−.0003	−.0003

(b) Distributed perturbation load on stringer $j=0$ between rings $i=0$ and $i=1$

j	Stringer load, p_{ij}, at station—					
	$i=1$	$i=2$	$i=3$	$i=4$	$i=5$	$i=6$
0	0.4477	0.3607	0.2949	0.2447	0.2061	0.1763
1	.0172	.0434	.0590	.0698	.0762	.0777
2	.0042	.0124	.0198	.0262	.0315	.0359
3	.0021	.0061	.0100	.0137	.0171	.0202
4	.0013	.0038	.0063	.0087	.0110	.0132
5	.0009	.0027	.0044	.0061	.0078	.0094
6	.0007	.0020	.0032	.0045	.0058	.0070
7	.0006	.0014	.0024	.0033	.0042	.0051
8	.0003	.0010	.0017	.0024	.0030	.0037
9	.0002	.0007	.0011	.0015	.0020	.0024
10	.0001	.0003	.0006	.0008	.0010	.0013
11	.0000	.0000	.0001	.0002	.0002	.0003
12	−.0001	−.0002	−.0003	−.0004	−.0005	−.0006
13	−.0001	−.0004	−.0007	−.0009	−.0012	−.0014
14	−.0002	−.0006	−.0010	−.0014	−.0017	−.0020
15	−.0003	−.0008	−.0012	−.0017	−.0021	−.0025
16	−.0003	−.0009	−.0014	−.0019	−.0024	−.0029
17	−.0003	−.0009	−.0015	−.0021	−.0026	−.0032
18	−.0003	−.0010	−.0016	−.0021	−.0027	−.0033

j	Shear flow, $q_{ij}L$, at station—					
	$i=0$	$i=1$	$i=2$	$i=3$	$i=4$	$i=5$
0	0.0523	0.0435	0.0329	0.0251	0.0193	0.0149
1	.0177	.0174	.0164	.0153	.0138	.0124
2	.0092	.0092	.0091	.0088	.0085	.0081
3	.0051	.0062	.0063	.0051	.0061	.0060
4	.0026	.0026	.0027	.0027	.0028	.0028
5	.0008	.0008	.0009	.0010	.0011	.0012
6	−.0006	−.0005	−.0004	−.0002	−.0001	.0000
7	−.0015	−.0014	−.0013	−.0012	−.0010	−.0009
8	−.0022	−.0021	−.0020	−.0018	−.0017	−.0016
9	−.0027	−.0026	−.0024	−.0023	−.0021	−.0020
10	−.0029	−.0028	−.0026	−.0025	−.0024	−.0022
11	−.0029	−.0028	−.0027	−.0026	−.0024	−.0023
12	−.0028	−.0027	−.0026	−.0024	−.0023	−.0022
13	−.0025	−.0024	−.0023	−.0022	−.0021	−.0020
14	−.0021	−.0020	−.0019	−.0018	−.0018	−.0017
15	−.0016	−.0015	−.0014	−.0014	−.0013	−.0013
16	−.0010	−.0009	−.0009	−.0008	−.0008	−.0008
17	−.0003	−.0003	−.0003	−.0003	−.0003	−.0003

(c) Shear perturbation load about shear panel (0,0)

j	Stringer load, p_{ij}/L, at station—					
	$i=1$	$i=2$	$i=3$	$i=4$	$i=5$	$i=6$
1	−0.4296	−0.3169	−0.2346	−0.1745	−0.1305	−0.0981
2	−.0112	−.0297	−.0388	−.0424	−.0425	−.0406
3	.0007	−.0042	−.0077	−.0104	−.0124	−.0136
4	.0030	.0006	−.0009	−.0032	−.0033	−.0042
5	.0040	.0023	.0015	.0008	.0002	−.0004
6	.0046	.0033	.0028	.0023	.0019	.0015
7	.0049	.0039	.0035	.0032	.0029	.0028
8	.0049	.0043	.0040	.0037	.0035	.0032
9	.0048	.0045	.0042	.0040	.0038	.0036
10	.0045	.0045	.0043	.0041	.0039	.0037
11	.0041	.0044	.0042	.0040	.0038	.0037
12	.0036	.0041	.0040	.0038	.0036	.0034
13	.0031	.0037	.0036	.0035	.0033	.0032
14	.0025	.0032	.0031	.0030	.0029	.0028
15	.0020	.0026	.0025	.0024	.0024	.0023
16	.0014	.0019	.0019	.0018	.0017	.0017
17	.0008	.0013	.0011	.0011	.0011	.0010
18	.0003	.0004	.0003	.0004	.0004	.0004

j	Shear flow, q_{ij}, at station—					
	$i=0$	$i=1$	$i=2$	$i=3$	$i=4$	$i=5$
0	0.1936	0.0842	0.0657	0.0502	0.0386	0.0299
1	.0632	−.0287	−.0166	−.0099	−.0056	−.0025
2	.0757	−.0102	−.0075	−.0064	−.0054	−.0044
3	.0744	−.0053	−.0040	−.0037	−.0034	−.0031
4	.0684	−.0028	−.0025	−.0024	−.0023	−.0022
5	.0604	−.0012	−.0017	−.0017	−.0017	−.0016
6	.0512	.0001	−.0012	−.0013	−.0013	−.0012
7	.0416	.0011	−.0008	−.0009	−.0009	−.0009
8	.0317	.0017	−.0006	−.0007	−.0007	−.0006
9	.0221	.0020	−.0003	−.0004	−.0004	−.0004
10	.0133	.0020	−.0001	−.0002	−.0002	−.0003
11	.0050	.0017	.0000	.0000	−.0001	−.0001
12	−.0023	.0012	.0002	.0001	.0001	.0001
13	−.0083	.0006	.0003	.0002	.0002	.0002
14	−.0133	−.0001	.0004	.0004	.0003	.0003
15	−.0172	−.0007	.0004	.0005	.0004	.0004
16	−.0200	−.0012	.0004	.0005	.0005	.0005
17	−.0217	−.0016	.0005	.0006	.0006	.0006
18	−.0222	−.0017	.0005	.0006	.0006	.0005

TABLE 16.—LOAD DISTRIBUTION DUE TO A UNIT PERTURBATION LOAD

[$B=8$; $C=2\times10^4$; $m=36$]

(a) Concentrated perturbation load on stringer $j=0$ at ring $i=0$

j	Stringer load, p_{ij}, at station—						
	$i=0$	$i=1$	$i=2$	$i=3$	$i=4$	$i=5$	$i=6$
0	0.5000	0.0682	0.0710	0.0569	0.0503	0.0467	0.0443
1	.0	.1070	.0690	.0562	.0494	.0460	.0438
2	0	.0609	.0580	.0508	.0466	.0441	.0423
3	0	.0340	.0453	.0446	.0426	.0410	.0397
4	0	.0171	.0336	.0360	.0371	.0367	.0362
5	0	.0070	.0207	.0278	.0306	.0315	.0318
6	0	.0016	.0113	.0191	.0234	.0257	.0268
7	0	−.0007	.0046	.0115	.0164	.0196	.0214
8	0	−.0013	.0004	.0064	.0100	.0134	.0158
9	0	−.0012	−.0017	.0009	.0046	.0079	.0104
10	0	−.0010	−.0025	−.0019	.0004	.0031	.0054
11	0	−.0008	−.0026	−.0034	−.0026	−.0008	.0011
12	0	−.0003	−.0024	−.0040	−.0043	−.0036	−.0026
13	0	−.0009	−.0022	−.0041	−.0052	−.0055	−.0052
14	0	−.0010	−.0022	−.0039	−.0056	−.0066	−.0071
15	0	−.0011	−.0022	−.0038	−.0056	−.0073	−.0084
16	0	−.0012	−.0023	−.0036	−.0064	−.0074	−.0092
17	0	−.0012	−.0023	−.0035	−.0053	−.0074	−.0096
18	0	−.0012	−.0023	−.0035	−.0052	−.0074	−.0097

j	Shear flow, $q_{ij}L$, at station—					
	$i=0$	$i=1$	$i=2$	$i=3$	$i=4$	$i=5$
0	0.2159	−0.0014	0.0076	0.0028	0.0018	0.0012
1	.1080	.0430	.0149	.0087	.0052	.0034
2	.0480	.0459	.0222	.0146	.0079	.0052
3	.0140	.0241	.0234	.0146	.0095	.0065
4	−.0031	.0186	.0194	.0141	.0099	.0070
5	−.0101	.0048	.0122	.0114	.0080	.0066
6	−.0117	−.0048	.0045	.0071	.0067	.0065
7	−.0110	−.0101	−.0025	.0022	.0036	.0036
8	−.0096	−.0118	−.0074	−.0025	.0002	.0012
9	−.0084	−.0113	−.0101	−.0062	−.0031	−.0013
10	−.0075	−.0093	−.0107	−.0085	−.0067	−.0046
11	−.0067	−.0080	−.0089	−.0094	−.0074	−.0056
12	−.0060	−.0064	−.0083	−.0090	−.0083	−.0066
13	−.0060	−.0060	−.0065	−.0078	−.0079	−.0069
14	−.0041	−.0038	−.0047	−.0063	−.0069	−.0064
15	−.0030	−.0027	−.0032	−.0044	−.0053	−.0051
16	−.0018	−.0016	−.0018	−.0026	−.0033	−.0033
17	−.0006	−.0006	−.0006	−.0009	−.0011	−.0012

(b) Distributed perturbation load on stringer $j=0$ between rings $i=0$ and $i=1$

j	Stringer load, p_{ij}, at station—					
	$i=1$	$i=2$	$i=3$	$i=4$	$i=5$	$i=6$
0	0.2073	0.0740	0.0621	0.0530	0.0483	0.0454
1	.0850	.0785	.0590	.0520	.0476	.0448
2	.0399	.0606	.0539	.0487	.0454	.0431
3	.0187	.0419	.0453	.0436	.0418	.0403
4	.0074	.0203	.0351	.0369	.0389	.0364
5	.0018	.0145	.0248	.0294	.0311	.0317
6	−.0005	.0063	.0156	.0215	.0247	.0263
7	−.0009	.0015	.0082	.0142	.0181	.0205
8	−.0007	−.0009	.0028	.0078	.0118	.0147
9	−.0004	−.0018	−.0006	.0028	.0063	.0092
10	−.0002	−.0019	−.0024	−.0008	.0018	.0043
11	−.0002	−.0017	−.0031	−.0030	−.0017	.0001
12	−.0003	−.0016	−.0033	−.0043	−.0040	−.0031
13	−.0004	−.0014	−.0032	−.0047	−.0054	−.0054
14	−.0005	−.0015	−.0030	−.0048	−.0061	−.0069
15	−.0006	−.0016	−.0029	−.0047	−.0064	−.0078
16	−.0006	−.0017	−.0029	−.0044	−.0064	−.0083
17	−.0006	−.0018	−.0029	−.0043	−.0063	−.0085
18	−.0006	−.0018	−.0029	−.0043	−.0063	−.0086

j	Shear flow, $q_{ij}L$, at station—					
	$i=0$	$i=1$	$i=2$	$i=3$	$i=4$	$i=5$
0	0.2927	0.0666	0.0060	0.0046	0.0023	0.0014
1	.1258	.0720	.0266	.0116	.0007	.0042
2	.0429	.0523	.0323	.0168	.0100	.0064
3	.0066	.0290	.0289	.0186	.0118	.0079
4	−.0092	.0101	.0201	.0167	.0119	.0084
5	−.0127	−.0026	.0097	.0122	.0102	.0077
6	−.0117	−.0094	.0005	.0062	.0070	.0061
7	−.0098	−.0119	−.0061	.0002	.0031	.0037
8	−.0085	−.0117	−.0098	−.0047	−.0010	.0008
9	−.0077	−.0102	−.0111	−.0080	−.0045	−.0021
10	−.0072	−.0086	−.0106	−.0096	−.0070	−.0046
11	−.0068	−.0071	−.0091	−.0097	−.0084	−.0064
12	−.0061	−.0059	−.0074	−.0087	−.0086	−.0074
13	−.0053	−.0049	−.0056	−.0073	−.0079	−.0074
14	−.0043	−.0040	−.0041	−.0054	−.0066	−.0067
15	−.0030	−.0029	−.0028	−.0037	−.0049	−.0052
16	−.0018	−.0018	−.0016	−.0021	−.0030	−.0033
17	−.0006	−.0006	−.0005	−.0007	−.0010	−.0012

(c) Shear perturbation load about shear panel (0,0)

j	Stringer load, p_{ij}/L, at station—					
	$i=1$	$i=2$	$i=3$	$i=4$	$i=5$	$i=6$
1	−0.1123	0.0064	−0.0021	−0.0003	−0.0002	−0.0001
2	−.0203	−.0118	−.0019	−.0012	−.0006	−.0003
3	.0074	−.0084	−.0032	−.0015	−.0008	−.0006
4	.0122	−.0025	−.0028	−.0015	−.0009	−.0006
5	.0038	.0017	−.0013	−.0012	−.0008	−.0006
6	.0038	.0035	.0002	−.0006	−.0006	−.0005
7	.0000	.0033	.0013	.0001	−.0003	−.0003
8	−.0017	.0021	.0017	.0006	.0001	−.0001
9	−.0018	.0007	.0015	.0009	.0004	.0001
10	−.0012	−.0003	.0010	.0009	.0006	.0003
11	−.0004	−.0007	.0004	.0007	.0006	.0004
12	.0001	−.0008	−.0001	.0004	.0005	.0004
13	.0002	−.0005	−.0004	.0001	.0003	.0004
14	.0002	−.0002	−.0006	−.0002	.0001	.0003
15	.0001	.0000	−.0004	−.0003	.0000	.0002
16	.0000	.0001	−.0003	−.0003	−.0001	.0001
17	.0000	.0001	−.0001	−.0002	−.0001	.0001
18	.0000	.0000	.0000	−.0001	.0000	.0000

j	Shear flow, q_{ij}, at station—					
	$i=0$	$i=1$	$i=2$	$i=3$	$i=4$	$i=5$
0	0.7903	0.0974	0.0006	0.0033	0.0012	0.0007
1	.0150	−.0214	.0091	.0015	.0011	.0006
2	.0587	−.0299	−.0009	.0008	.0005	.0004
3	.0409	−.0141	−.0061	−.0009	−.0001	.0001
4	.0154	.0006	−.0068	−.0021	−.0008	−.0003
5	−.0013	.0077	−.0028	−.0022	−.0011	−.0005
6	−.0088	.0080	.0005	−.0015	−.0011	−.0006
7	−.0089	.0048	.0026	−.0003	−.0008	−.0006
8	−.0056	.0010	.0030	.0007	−.0002	−.0004
9	−.0020	−.0014	.0022	.0013	.0003	−.0001
10	.0004	−.0023	.0009	.0013	.0007	.0002
11	.0012	−.0019	−.0002	.0009	.0008	.0004
12	.0011	−.0011	−.0003	.0004	.0007	.0005
13	.0006	−.0003	−.0009	−.0001	.0005	.0004
14	.0003	.0001	−.0007	−.0004	.0003	.0003
15	−.0001	.0003	−.0004	−.0004	−.0001	.0000
16	−.0001	.0002	.0000	−.0004	−.0004	−.0002
17	−.0001	.0001	.0002	−.0003	−.0005	−.0004
18	−.0001	.0001	.0003	−.0003	−.0005	−.0004

TABLE 17.—LOAD DISTRIBUTION DUE TO A UNIT PERTURBATION LOAD

[$B = 30$; $C = 2 \times 10^4$; $m = 36$]

(a) Concentrated perturbation load on stringer $j=0$ at ring $i=0$

j	Stringer load, p_{ij}, at station—						
	$i=0$	$i=1$	$i=2$	$i=3$	$i=4$	$i=5$	$i=6$
0	0.5000	0.1585	0.0018	0.0602	0.0584	0.0522	0.0484
1	0	.0925	.0772	.0640	.0559	.0508	.0474
2	0	.0411	.0533	.0525	.0495	.0467	.0445
3	0	.0219	.0354	.0404	.0418	.0411	.0404
4	0	.0124	.0235	.0301	.0333	.0348	.0353
5	0	.0068	.0153	.0217	.0256	.0283	.0298
6	0	.0034	.0093	.0149	.0191	.0221	.0242
7	0	.0013	.0051	.0095	.0133	.0164	.0187
8	0	.0002	.0022	.0053	.0084	.0112	.0135
9	0	−.0004	.0003	.0021	.0044	.0067	.0087
10	0	−.0007	−.0009	−.0002	.0012	.0029	.0045
11	0	−.0008	−.0016	−.0017	−.0011	−.0002	.0009
12	0	−.0009	−.0020	−.0027	−.0028	−.0025	−.0020
13	0	−.0010	−.0022	−.0033	−.0040	−.0043	−.0044
14	0	−.0010	−.0023	−.0036	−.0048	−.0056	−.0062
15	0	−.0011	−.0024	−.0038	−.0052	−.0065	−.0075
16	0	−.0012	−.0024	−.0038	−.0054	−.0070	−.0084
17	0	−.0012	−.0024	−.0039	−.0056	−.0073	−.0089
18	0	−.0012	−.0024	−.0039	−.0056	−.0074	−.0091

j	Shear flow, $q_{ij}L$, at station—					
	$i=0$	$i=1$	$i=2$	$i=3$	$i=4$	$i=5$
0	0.1708	0.0334	0.0113	0.0054	0.0031	0.0019
1	.0783	.0487	.0245	.0135	.0083	.0053
2	.0372	.0364	.0283	.0165	.0109	.0074
3	.0183	.0250	.0222	.0185	.0112	.0082
4	.0029	.0118	.0137	.0132	.0099	.0076
5	−.0039	.0034	.0073	.0081	.0074	.0062
6	−.0073	−.0026	.0017	.0038	.0044	.0041
7	−.0086	−.0064	−.0027	.0000	.0013	.0018
8	−.0088	−.0084	−.0057	−.0022	−.0014	−.0004
9	−.0084	−.0090	−.0075	−.0065	−.0037	−.0024
10	−.0078	−.0088	−.0083	−.0069	−.0054	−.0041
11	−.0070	−.0080	−.0082	−.0075	−.0064	−.0052
12	−.0061	−.0068	−.0075	−.0074	−.0067	−.0057
13	−.0051	−.0056	−.0064	−.0067	−.0064	−.0056
14	−.0041	−.0043	−.0051	−.0056	−.0055	−.0050
15	−.0030	−.0031	−.0038	−.0041	−.0042	−.0039
16	−.0018	−.0018	−.0022	−.0025	−.0027	−.0025
17	−.0006	−.0006	−.0007	−.0009	−.0009	−.0008

(b) Distributed perturbation load on stringer $j=0$ between rings $i=0$ and $i=1$

j	Stringer load, p_{ij}, at station—					
	$i=1$	$i=2$	$i=3$	$i=4$	$i=5$	$i=6$
0	0.2893	0.1192	0.0790	0.0632	0.0550	0.0502
1	.0640	.0580	.0701	.0606	.0531	.0490
2	.0235	.0490	.0632	.0510	.0481	.0456
3	.0115	.0290	.0384	.0411	.0413	.0407
4	.0060	.0154	.0272	.0319	.0342	.0351
5	.0030	.0111	.0157	.0239	.0272	.0291
6	.0013	.0063	.0122	.0171	.0207	.0232
7	.0004	.0031	.0073	.0115	.0149	.0170
8	−.0001	.0010	.0037	.0069	.0099	.0124
9	−.0002	−.0002	.0011	.0032	.0055	.0077
10	−.0003	−.0009	−.0000	.0005	.0021	.0037
11	−.0003	−.0013	−.0017	−.0015	−.0007	.0004
12	−.0004	−.0015	−.0024	−.0028	−.0027	−.0023
13	−.0004	−.0016	−.0028	−.0037	−.0042	−.0043
14	−.0005	−.0016	−.0030	−.0042	−.0052	−.0059
15	−.0005	−.0017	−.0031	−.0045	−.0058	−.0070
16	−.0006	−.0018	−.0031	−.0046	−.0062	−.0077
17	−.0006	−.0018	−.0031	−.0047	−.0064	−.0081
18	−.0006	−.0018	−.0031	−.0047	−.0065	−.0083

j	Shear flow, $q_{ij}L$, at station—					
	$i=0$	$i=1$	$i=2$	$i=3$	$i=4$	$i=5$
0	0.2107	0.0881	0.0201	0.0079	0.0041	0.0024
1	.0326	.0641	.0380	.0184	.0106	.0066
2	.0365	.0387	.0308	.0206	.0135	.0090
3	.0198	.0205	.0220	.0179	.0132	.0096
4	.0007	.0063	.0122	.0131	.0111	.0087
5	−.0053	.0000	.0067	.0079	.0078	.0068
6	−.0075	−.0050	−.0002	.0020	.0042	.0043
7	−.0068	−.0078	−.0045	−.0012	.0008	.0016
8	−.0085	−.0089	−.0071	−.0044	−.0022	−.0009
9	−.0081	−.0089	−.0064	−.0065	−.0046	−.0031
10	−.0074	−.0083	−.0067	−.0076	−.0061	−.0047
11	−.0067	−.0074	−.0062	−.0079	−.0070	−.0058
12	−.0059	−.0063	−.0072	−.0075	−.0071	−.0062
13	−.0051	−.0055	−.0060	−.0067	−.0066	−.0060
14	−.0041	−.0041	−.0047	−.0053	−.0056	−.0053
15	−.0030	−.0029	−.0033	−.0039	−.0042	−.0041
16	−.0018	−.0017	−.0020	−.0024	−.0026	−.0026
17	−.0006	−.0006	−.0007	−.0008	−.0009	−.0009

(c) Shear perturbation load about shear panel (0,0)

j	Stringer load, p_{ij}/L, at station—					
	$i=1$	$i=2$	$i=3$	$i=4$	$i=5$	$i=6$
1	−0.2188	−0.0323	−0.0079	−0.0029	−0.0014	−0.0007
2	−.0236	−.0305	−.0137	−.0064	−.0034	−.0019
3	.0093	−.0100	−.0097	−.0062	−.0039	−.0025
4	.0146	−.0005	−.0045	−.0043	−.0033	−.0024
5	.0124	.0040	−.0000	−.0021	−.0022	−.0019
6	.0078	.0064	.0017	−.0002	−.0010	−.0012
7	.0034	.0061	.0028	.0010	.0000	−.0005
8	.0002	.0038	.0030	.0017	.0006	.0001
9	−.0014	.0022	.0027	.0020	.0013	.0006
10	−.0018	.0008	.0010	.0018	.0014	.0009
11	−.0016	−.0002	.0011	.0014	.0013	.0011
12	−.0010	−.0006	.0003	.0009	.0011	.0011
13	−.0004	−.0010	−.0003	.0004	.0008	.0010
14	.0000	−.0009	−.0006	.0000	.0006	.0008
15	.0002	−.0007	−.0007	−.0002	.0003	.0006
16	.0002	−.0004	−.0006	−.0003	.0001	.0004
17	.0002	−.0002	−.0004	−.0002	.0000	.0002
18	.0001	−.0001	−.0002	−.0001	.0000	.0001

j	Shear flow, q_{ij}, at station—					
	$i=0$	$i=1$	$i=2$	$i=3$	$i=4$	$i=5$
0	0.5967	0.1438	0.0307	0.0103	0.0061	0.0029
1	.0372	−.0426	.0063	.0058	.0036	.0023
2	.0845	−.0358	−.0106	−.0015	.0005	.0008
3	.0660	−.0169	−.0114	−.0049	−.0018	−.0000
4	.0267	−.0007	−.0073	−.0051	−.0025	−.0014
5	.0120	.0075	−.0026	−.0036	−.0027	−.0018
6	−.0037	.0098	.0009	−.0017	−.0020	−.0016
7	−.0106	.0082	.0032	.0001	−.0009	−.0011
8	−.0111	.0047	.0039	.0014	.0001	−.0006
9	−.0084	.0012	.0034	.0021	.0008	.0001
10	−.0047	−.0014	.0023	.0022	.0013	.0005
11	−.0017	−.0027	.0010	.0018	.0014	.0008
12	.0004	−.0029	−.0001	.0012	.0013	.0008
13	.0012	−.0024	−.0009	.0005	.0008	.0006
14	.0013	−.0015	−.0011	−.0001	.0003	.0004
15	.0009	−.0006	−.0011	−.0006	−.0002	.0000
16	.0004	.0000	−.0009	−.0010	−.0007	−.0003
17	.0000	.0004	−.0007	−.0012	−.0009	−.0005
18	−.0002	.0006	−.0000	−.0012	−.0010	−.0005

TABLE 18.—LOAD DISTRIBUTION DUE TO A UNIT PERTURBATION LOAD

[$B = 100$; $C = 2 \times 10^4$; $m = 36$]

(a) Concentrated perturbation load on stringer $j=0$ at ring $i=0$

j	Stringer load, p_{ij}, at station—						
	$i=0$	$i=1$	$i=2$	$i=3$	$i=4$	$i=5$	$i=6$
0	0.5000	0.2504	0.1547	0.1079	0.0840	0.0704	0.0620
1	0	.0714	.0817	.0766	.0692	.0596	.0575
2	0	.0251	.0404	.0473	.0494	.0493	.0482
3	0	.0128	.0232	.0304	.0349	.0375	.0388
4	0	.0077	.0149	.0208	.0252	.0285	.0307
5	0	.0049	.0101	.0147	.0185	.0217	.0241
6	0	.0031	.0066	.0104	.0136	.0163	.0187
7	0	.0019	.0045	.0071	.0097	.0120	.0140
8	0	.0010	.0027	.0046	.0065	.0084	.0100
9	0	.0004	.0013	.0025	.0039	.0052	.0065
10	0	.0000	.0003	.0009	.0017	.0026	.0035
11	0	−.0004	−.0005	−.0004	−.0001	.0003	.0003
12	0	−.0006	−.0011	−.0014	−.0016	−.0015	−.0015
13	0	−.0008	−.0016	−.0022	−.0027	−.0031	−.0033
14	0	−.0009	−.0019	−.0028	−.0036	−.0043	−.0049
15	0	−.0010	−.0021	−.0033	−.0043	−.0052	−.0061
16	0	−.0011	−.0023	−.0035	−.0048	−.0059	−.0069
17	0	−.0012	−.0024	−.0037	−.0050	−.0063	−.0074
18	0	−.0012	−.0024	−.0037	−.0051	−.0064	−.0076

j	Shear flow, $q_{ij}L$, at station—					
	$i=0$	$i=1$	$i=2$	$i=3$	$i=4$	$i=5$
0	0.1218	0.0508	0.0234	0.0120	0.0068	0.0042
1	.0504	.0405	.0285	.0194	.0134	.0094
2	.0253	.0251	.0210	.0173	.0135	.0104
3	.0125	.0147	.0144	.0128	.0110	.0091
4	.0043	.0075	.0085	.0084	.0077	.0068
5	.0002	.0024	.0039	.0045	.0046	.0043
6	−.0033	−.0013	.0004	.0013	.0018	.0020
7	−.0062	−.0039	−.0023	−.0012	−.0005	.0000
8	−.0062	−.0055	−.0042	−.0032	−.0023	−.0017
9	−.0066	−.0064	−.0064	−.0045	−.0037	−.0030
10	−.0066	−.0067	−.0061	−.0053	−.0045	−.0038
11	−.0062	−.0065	−.0062	−.0057	−.0050	−.0043
12	−.0055	−.0060	−.0059	−.0056	−.0050	−.0044
13	−.0048	−.0052	−.0053	−.0051	−.0047	−.0042
14	−.0039	−.0042	−.0043	−.0043	−.0040	−.0036
15	−.0028	−.0031	−.0032	−.0032	−.0030	−.0027
16	−.0017	−.0019	−.0020	−.0020	−.0019	−.0017
17	−.0006	−.0007	−.0007	−.0007	−.0007	−.0006

(b) Distributed perturbation load on stringer $j=0$ between rings $i=0$ and $i=1$

j	Stringer load, p_{ij}, at station—					
	$i=1$	$i=2$	$i=3$	$i=4$	$i=5$	$i=6$
0	0.3611	0.1901	0.1287	0.0948	0.0766	0.0659
1	.0437	.0787	.0796	.0720	.0656	.0599
2	.0133	.0336	.0444	.0486	.0556	.0599
3	.0066	.0183	.0271	.0329	.0363	.0382
4	.0039	.0114	.0180	.0231	.0269	.0297
5	.0024	.0075	.0124	.0167	.0202	.0229
6	.0015	.0050	.0086	.0120	.0150	.0175
7	.0009	.0032	.0058	.0084	.0109	.0130
8	.0005	.0018	.0036	.0056	.0074	.0092
9	.0002	.0008	.0019	.0033	.0046	.0059
10	.0000	.0001	.0006	.0013	.0022	.0030
11	−.0002	−.0005	−.0006	−.0003	.0001	.0006
12	−.0003	−.0009	−.0013	−.0015	−.0016	−.0015
13	−.0004	−.0012	−.0019	−.0025	−.0029	−.0032
14	−.0005	−.0014	−.0024	−.0033	−.0040	−.0046
15	−.0005	−.0016	−.0027	−.0038	−.0048	−.0057
16	−.0006	−.0017	−.0029	−.0042	−.0053	−.0064
17	−.0006	−.0018	−.0030	−.0044	−.0057	−.0068
18	−.0006	−.0018	−.0031	−.0044	−.0058	−.0070

j	Shear flow, $q_{ij}L$, at station—					
	$i=0$	$i=1$	$i=2$	$i=3$	$i=4$	$i=5$
0	0.1389	0.0810	.0.0353	0.0170	0.0091	0.0054
1	.0515	.0461	.0343	.0237	.0162	.0112
2	.0240	.0258	.0235	.0194	.0153	.0119
3	.0118	.0140	.0147	.0137	.0119	.0100
4	.0041	.0064	.0082	.0085	.0081	.0073
5	−.0007	.0012	.0033	.0043	.0046	.0045
6	−.0036	−.0022	−.0003	.0009	.0016	.0019
7	−.0054	−.0045	−.0030	−.0017	−.0008	−.0002
8	−.0053	−.0059	−.0048	−.0037	−.0027	−.0020
9	−.0060	−.0066	−.0059	−.0050	−.0042	−.0033
10	−.0060	−.0067	−.0063	−.0057	−.0049	−.0042
11	−.0062	−.0064	−.0063	−.0059	−.0055	−.0047
12	−.0056	−.0058	−.0059	−.0057	−.0053	−.0047
13	−.0048	−.0050	−.0052	−.0052	−.0049	−.0044
14	−.0039	−.0040	−.0042	−.0043	−.0041	−.0038
15	−.0028	−.0029	−.0031	−.0032	−.0031	−.0029
16	−.0017	−.0018	−.0019	−.0020	−.0020	−.0018
17	−.0006	−.0006	−.0006	−.0007	−.0007	−.0006

(c) Shear perturbation load about shear panel (0,0)

j	Stringer load, p_{ij}/L, at station—					
	$i=1$	$i=2$	$i=3$	$i=4$	$i=5$	$i=6$
1	−0.3133	−0.1190	−0.0482	−0.0213	−0.0103	−0.0055
2	−.0196	−.0409	−.0328	−.0223	−.0147	−.0098
3	.0080	−.0089	−.0132	−.0127	−.0106	−.0084
4	.0128	.0011	−.0037	−.0056	−.0059	−.0056
5	.0123	.0049	.0008	−.0015	−.0020	−.0030
6	.0097	.0051	.0029	.0008	−.0004	−.0011
7	.0065	.0039	.0028	.0021	.0010	.0002
8	.0034	.0051	.0039	.0027	.0018	.0011
9	.0011	.0038	.0036	.0029	.0022	.0017
10	−.0005	.0024	.0029	.0027	.0023	.0020
11	−.0013	.0012	.0031	.0024	.0023	.0021
12	−.0015	.0002	.0014	.0019	.0021	.0020
13	−.0013	−.0005	.0007	.0014	.0018	.0019
14	−.0009	−.0009	.0002	.0010	.0014	.0016
15	−.0006	−.0010	−.0001	.0006	.0011	.0013
16	−.0003	−.0009	−.0003	.0004	.0008	.0010
17	−.0001	−.0006	−.0002	.0002	.0004	.0006
18	.0000	−.0002	−.0001	.0001	.0001	.0002

j	Shear flow, q_{ij}, at station—					
	$i=0$	$i=1$	$i=2$	$i=3$	$i=4$	$i=5$
0	0.4304	0.1425	0.0633	0.0302	0.0160	0.0094
1	.0670	−.0518	−.0074	.0032	.0050	.0046
2	.0963	−.0305	−.0157	−.0070	−.0028	−.0004
3	.0803	−.0136	−.0114	−.0075	−.0046	−.0026
4	.0547	−.0020	−.0066	−.0050	−.0042	−.0030
5	.0301	.0054	−.0025	−.0034	−.0031	−.0026
6	.0106	.0091	.0007	−.0014	−.0010	−.0019
7	−.0023	.0006	.0020	.0003	−.0007	−.0012
8	−.0092	.0080	.0040	.0015	.0002	−.0005
9	−.0113	.0052	.0042	.0023	.0009	.0001
10	−.0103	.0023	.0037	.0024	.0013	.0004
11	−.0078	−.0001	.0027	.0022	.0013	.0006
12	−.0049	−.0017	.0016	.0017	.0012	.0007
13	−.0023	−.0025	.0004	.0010	.0008	.0006
14	−.0004	−.0020	−.0007	.0002	.0004	.0004
15	.0008	−.0022	−.0015	−.0006	−.0001	.0003
16	.0014	−.0016	−.0021	−.0011	−.0003	.0000
17	.0017	−.0012	−.0025	−.0015	−.0006	−.0002
18	.0018	−.0010	−.0026	−.0018	−.0006	−.0002

TABLE 19.—LOAD DISTRIBUTION DUE TO A UNIT PERTURBATION LOAD

[B=300; G=2×10⁴; m=36]

(a) Concentrated perturbation load on stringer $j=0$ at ring $i=0$

j	Stringer load, p_{ij}, at station—						
	$i=0$	$i=1$	$i=2$	$i=3$	$i=4$	$i=5$	$i=6$
0	0.5000	0.3368	0.2370	0.1700	0.1373	0.1119	0.0947
1	0	.0509	.0720	.0788	.0785	.0755	.0715
2	0	.0151	.0274	.0302	.0420	.0455	.0474
3	0	.0075	.0144	.0203	.0252	.0291	.0321
4	0	.0040	.0091	.0132	.0169	.0201	.0229
5	0	.0031	.0063	.0093	.0121	.0146	.0169
6	0	.0022	.0045	.0067	.0088	.0108	.0127
7	0	.0015	.0032	.0048	.0064	.0080	.0094
8	0	.0010	.0021	.0033	.0045	.0056	.0067
9	0	.0006	.0013	.0021	.0028	.0038	.0044
10	0	.0002	.0006	.0010	.0014	.0019	.0024
11	0	−.0001	.0000	.0000	.0002	.0004	.0006
12	0	−.0003	−.0005	−.0007	−.0009	−.0010	−.0010
13	0	−.0005	−.0010	−.0014	−.0018	−.0021	−.0024
14	0	−.0007	−.0013	−.0019	−.0025	−.0030	−.0035
15	0	−.0008	−.0016	−.0024	−.0031	−.0038	−.0044
16	0	−.0009	−.0018	−.0027	−.0035	−.0043	−.0050
17	0	−.0009	−.0019	−.0028	−.0038	−.0046	−.0054
18	0	−.0010	−.0019	−.0029	−.0038	−.0047	−.0056

j	Shear flow, $q_{ij}L$, at station—					
	$i=0$	$i=1$	$i=2$	$i=3$	$i=4$	$i=5$
0	0.0831	0.0494	0.0305	0.0194	0.0127	0.0088
1	.0312	.0283	.0229	.0196	.0157	.0128
2	.0161	.0161	.0151	.0137	.0121	.0105
3	.0086	.0093	.0092	.0088	.0082	.0076
4	.0039	.0047	.0051	.0051	.0050	.0048
5	.0003	.0016	.0021	.0023	.0025	.0025
6	−.0014	−.0007	−.0002	.0002	.0005	.0006
7	−.0029	−.0023	−.0018	−.0014	−.0011	−.0008
8	−.0039	−.0035	−.0030	−.0026	−.0022	−.0019
9	−.0044	−.0042	−.0038	−.0034	−.0030	−.0027
10	−.0047	−.0045	−.0042	−.0038	−.0035	−.0032
11	−.0046	−.0045	−.0043	−.0040	−.0036	−.0033
12	−.0043	−.0043	−.0041	−.0039	−.0035	−.0033
13	−.0038	−.0038	−.0037	−.0035	−.0032	−.0030
14	−.0031	−.0032	−.0031	−.0029	−.0027	−.0025
15	−.0023	−.0024	−.0023	−.0022	−.0020	−.0019
16	−.0014	−.0014	−.0014	−.0014	−.0013	−.0012
17	−.0006	−.0006	−.0005	−.0005	−.0004	−.0004

(b) Distributed perturbation load on stringer $j=0$ between rings $i=0$ and $i=1$

j	Stringer load, p_{ij}, at station—					
	$i=1$	$i=2$	$i=3$	$i=4$	$i=5$	$i=6$
0	0.4110	0.2824	0.2042	0.1552	0.1237	0.1028
1	.0268	.0631	.0761	.0789	.0771	.0735
2	.0077	.0216	.0331	.0393	.0429	.0466
3	.0038	.0110	.0174	.0228	.0272	.0307
4	.0022	.0059	.0112	.0151	.0185	.0215
5	.0016	.0047	.0078	.0107	.0134	.0156
6	.0011	.0033	.0056	.0078	.0099	.0118
7	.0007	.0023	.0040	.0056	.0072	.0087
8	.0006	.0016	.0027	.0039	.0051	.0062
9	.0003	.0009	.0017	.0025	.0033	.0040
10	.0001	.0004	.0008	.0012	.0017	.0021
11	.0000	−.0001	.0000	.0001	.0003	.0005
12	−.0002	−.0006	−.0007	−.0008	−.0009	−.0010
13	−.0003	−.0006	−.0012	−.0016	−.0019	−.0022
14	−.0003	−.0010	−.0016	−.0022	−.0028	−.0033
15	−.0004	−.0012	−.0020	−.0027	−.0034	−.0041
16	−.0004	−.0013	−.0022	−.0031	−.0039	−.0047
17	−.0005	−.0014	−.0024	−.0033	−.0042	−.0050
18	−.0005	−.0014	−.0024	−.0034	−.0043	−.0051

j	Shear flow, $q_{ij}L$, at station—					
	$i=0$	$i=1$	$i=2$	$i=3$	$i=4$	$i=5$
0	0.0890	0.0643	0.0391	0.0244	0.0158	0.0105
1	.0314	.0300	.0261	.0216	.0176	.0140
2	.0160	.0162	.0156	.0144	.0130	.0114
3	.0084	.0090	.0092	.0090	.0085	.0079
4	.0037	.0044	.0049	.0051	.0051	.0049
5	.0006	.0012	.0018	.0022	.0024	.0025
6	−.0015	−.0010	−.0004	.0000	.0003	.0006
7	−.0030	−.0026	−.0021	−.0016	−.0012	−.0010
8	−.0040	−.0037	−.0032	−.0028	−.0024	−.0021
9	−.0043	−.0043	−.0040	−.0036	−.0032	−.0029
10	−.0047	−.0046	−.0044	−.0040	−.0036	−.0033
11	−.0046	−.0046	−.0044	−.0042	−.0036	−.0035
12	−.0043	−.0043	−.0042	−.0040	−.0037	−.0034
13	−.0037	−.0038	−.0038	−.0036	−.0034	−.0031
14	−.0031	−.0031	−.0031	−.0030	−.0028	−.0027
15	−.0023	−.0023	−.0024	−.0023	−.0021	−.0020
16	−.0014	−.0014	−.0015	−.0014	−.0013	−.0013
17	−.0006	−.0006	−.0005	−.0006	−.0004	−.0004

(c) Shear perturbation load about shear panel (0,0)

j	Stringer load, p_{ij}/L, at station—					
	$i=1$	$i=2$	$i=3$	$i=4$	$i=5$	$i=6$
1	−0.3790	−0.2183	−0.1274	−0.0789	−0.0462	−0.0288
2	−.0141	−.0387	−.0421	−.0381	−.0319	−.0267
3	.0060	−.0060	−.0116	−.0140	−.0145	−.0133
4	.0099	.0010	−.0022	−.0045	−.0067	−.0063
5	.0104	.0043	.0014	−.0004	−.0015	−.0023
6	.0091	.0054	.0031	.0016	.0007	.0000
7	.0076	.0050	.0038	.0027	.0019	.0014
8	.0064	.0052	.0041	.0033	.0027	.0022
9	.0053	.0045	.0040	.0036	.0031	.0027
10	.0016	.0036	.0037	.0035	.0032	.0029
11	.0002	.0020	.0032	.0033	.0032	.0030
12	−.0007	.0017	.0027	.0030	.0030	.0029
13	−.0011	.0009	.0021	.0026	.0027	.0027
14	−.0013	.0003	.0010	.0022	.0023	.0023
15	−.0012	.0000	.0011	.0017	.0019	.0018
16	−.0010	−.0003	.0003	.0012	.0014	.0014
17	−.0006	−.0003	.0004	.0007	.0008	.0009
18	−.0003	−.0001	.0001	.0002	.0003	.0003

j	Shear flow, q_{ij}, at station—					
	$i=0$	$i=1$	$i=2$	$i=3$	$i=4$	$i=5$
0	0.3295	0.1135	0.0729	0.0406	0.0204	0.0204
1	.0658	−.0479	−.0177	−.0049	.0008	.0031
2	.0970	−.0233	−.0142	−.0090	−.0054	−.0021
3	.0849	−.0112	−.0067	−.0066	−.0049	−.0037
4	.0651	−.0029	−.0049	−.0043	−.0036	−.0031
5	.0442	.0031	−.0019	−.0035	−.0026	−.0024
6	.0254	.0071	.0004	−.0010	−.0015	−.0017
7	.0103	.0090	.0022	.0001	−.0005	−.0011
8	−.0005	.0091	.0034	.0009	−.0003	−.0006
9	−.0072	.0080	.0039	.0015	.0003	−.0003
10	−.0103	.0060	.0033	.0017	.0006	.0000
11	−.0107	.0036	.0031	.0010	.0007	.0002
12	−.0094	.0012	.0021	.0015	.0000	.0006
13	−.0071	−.0008	.0009	.0015	.0005	.0004
14	−.0045	−.0025	−.0004	.0002	.0004	.0004
15	−.0021	−.0035	−.0015	−.0004	.0002	.0004
16	−.0002	−.0044	−.0024	−.0003	.0000	.0004
17	.0010	−.0048	−.0030	−.0011	−.0001	.0003
18	.0014	−.0050	−.0033	−.0012	−.0002	.0003

TABLE 20.—LOAD DISTRIBUTION DUE TO A UNIT PERTURBATION LOAD

[B=1,000; C=2×10⁴; m=30]

(a) Concentrated perturbation load on stringer $j=0$ at ring $i=0$

j	Stringer load, p_{ij}, at station—						
	$i=0$	$i=1$	$i=2$	$i=3$	$i=4$	$i=5$	$i=6$
0	0.5000	0.4001	0.3248	0.2676	0.2237	0.1900	0.1637
1	0	.0323	.0530	.0657	.0731	.0769	.0783
2	0	.0084	.0162	.0232	.0290	.0338	.0378
3	0	.0041	.0081	.0119	.0154	.0187	.0216
4	0	.0026	.0051	.0075	.0099	.0121	.0143
5	0	.0016	.0036	.0052	.0070	.0086	.0102
6	0	.0013	.0026	.0039	.0051	.0064	.0075
7	0	.0010	.0019	.0029	.0038	.0047	.0056
8	0	.0007	.0014	.0020	.0027	.0033	.0040
9	0	.0004	.0009	.0013	.0018	.0023	.0026
10	0	.0002	.0004	.0007	.0009	.0013	.0014
11	0	.0000	.0001	.0001	.0002	.0002	.0003
12	0	−.0001	−.0003	−.0004	−.0006	−.0006	−.0006
13	0	−.0003	−.0006	−.0008	−.0010	−.0013	−.0015
14	0	−.0004	−.0008	−.0013	−.0016	−.0019	−.0023
15	0	−.0006	−.0010	−.0015	−.0019	−.0023	−.0027
16	0	−.0006	−.0011	−.0017	−.0022	−.0027	−.0032
17	0	−.0006	−.0012	−.0018	−.0024	−.0029	−.0034
18	0	−.0006	−.0013	−.0018	−.0024	−.0030	−.0035

j	Shear flow, $q_{ij}L$, at station—					
	$i=0$	$i=1$	$i=2$	$i=3$	$i=4$	$i=5$
0	0.0499	0.0377	0.0288	0.0219	0.0169	0.0132
1	.0177	.0170	.0159	.0145	.0131	.0118
2	.0093	.0092	.0090	.0087	.0083	.0079
3	.0051	.0052	.0052	.0051	.0050	.0049
4	.0026	.0027	.0027	.0028	.0028	.0028
5	.0008	.0009	.0010	.0011	.0011	.0012
6	−.0006	−.0004	−.0003	−.0002	−.0001	.0000
7	−.0015	−.0014	−.0012	−.0011	−.0010	−.0009
8	−.0022	−.0020	−.0019	−.0018	−.0016	−.0015
9	−.0025	−.0025	−.0023	−.0022	−.0021	−.0019
10	−.0029	−.0027	−.0026	−.0024	−.0023	−.0023
11	−.0029	−.0028	−.0026	−.0025	−.0024	−.0022
12	−.0028	−.0026	−.0025	−.0024	−.0023	−.0023
13	−.0025	−.0024	−.0022	−.0022	−.0020	−.0020
14	−.0020	−.0020	−.0019	−.0018	−.0017	−.0016
15	−.0015	−.0015	−.0014	−.0014	−.0013	−.0012
16	−.0010	−.0009	−.0009	−.0008	−.0008	−.0008
17	−.0003	−.0003	−.0003	−.0003	−.0003	−.0003

(b) Distributed perturbation load on stringer $j=0$ between rings $i=0$ and $i=1$

j	Stringer load, p_{ij}, at station—					
	$i=1$	$i=2$	$i=3$	$i=4$	$i=5$	$i=6$
0	0.4477	0.3607	0.2949	0.2447	0.2061	0.1763
1	.0173	.0434	.0599	.0698	.0759	.0777
2	.0042	.0124	.0198	.0262	.0316	.0369
3	.0021	.0061	.0100	.0137	.0171	.0202
4	.0013	.0038	.0063	.0087	.0110	.0132
5	.0009	.0027	.0044	.0061	.0078	.0094
6	.0007	.0020	.0032	.0045	.0056	.0070
7	.0005	.0014	.0024	.0033	.0043	.0051
8	.0003	.0010	.0017	.0024	.0030	.0037
9	.0002	.0007	.0011	.0015	.0020	.0024
10	.0001	.0003	.0006	.0008	.0010	.0013
11	.0000	.0000	.0001	.0002	.0002	.0003
12	−.0001	−.0002	−.0003	−.0004	−.0005	−.0006
13	−.0001	−.0004	−.0007	−.0009	−.0012	−.0014
14	−.0002	−.0006	−.0010	−.0014	−.0017	−.0020
15	−.0003	−.0008	−.0012	−.0017	−.0021	−.0025
16	−.0003	−.0009	−.0014	−.0019	−.0024	−.0029
17	−.0003	−.0009	−.0015	−.0021	−.0026	−.0032
18	−.0003	−.0010	−.0015	−.0021	−.0027	−.0032

j	Shear flow, $q_{ij}L$, at station—					
	$i=0$	$i=1$	$i=2$	$i=3$	$i=4$	$i=5$
0	0.0523	0.0435	0.0369	0.0251	0.0193	0.0140
1	.0177	.0174	.0164	.0152	.0138	.0124
2	.0092	.0092	.0091	.0088	.0085	.0081
3	.0051	.0052	.0052	.0051	.0051	.0050
4	.0026	.0028	.0027	.0027	.0028	.0028
5	.0008	.0008	.0009	.0010	.0011	.0012
6	−.0006	−.0006	−.0004	−.0002	−.0001	.0000
7	−.0015	−.0014	−.0013	−.0012	−.0010	−.0009
8	−.0022	−.0021	−.0020	−.0018	−.0017	−.0016
9	−.0027	−.0026	−.0024	−.0023	−.0021	−.0020
10	−.0029	−.0028	−.0026	−.0025	−.0024	−.0022
11	−.0029	−.0028	−.0027	−.0026	−.0024	−.0023
12	−.0028	−.0027	−.0026	−.0024	−.0023	−.0022
13	−.0025	−.0024	−.0023	−.0022	−.0021	−.0020
14	−.0021	−.0020	−.0019	−.0018	−.0016	−.0017
15	−.0016	−.0015	−.0014	−.0014	−.0013	−.0013
16	−.0010	−.0009	−.0009	−.0008	−.0008	−.0008
17	−.0003	−.0003	−.0003	−.0003	−.0003	−.0003

(c) Shear perturbation load about shear panel (0,0)

j	Stringer load, p_{ij}/L, at station—					
	$i=1$	$i=2$	$i=3$	$i=4$	$i=5$	$i=6$
1	−0.4289	−0.3167	−0.2345	−0.1745	−0.1305	−0.0981
2	−.0068	−.0201	−.0387	−.0423	−.0425	−.0406
3	.0042	−.0033	−.0075	−.0104	−.0124	−.0136
4	.0060	.0016	−.0006	−.0021	−.0033	−.0042
5	.0078	.0035	.0019	.0009	.0002	−.0004
6	.0078	.0044	.0031	.0024	.0019	.0015
7	.0070	.0048	.0038	.0033	.0029	.0026
8	.0069	.0048	.0041	.0038	.0035	.0032
9	.0046	.0046	.0043	.0040	.0038	.0036
10	.0032	.0043	.0042	.0041	.0039	.0037
11	.0020	.0038	.0041	.0040	.0038	.0037
12	.0010	.0032	.0037	.0038	.0036	.0035
13	.0002	.0025	.0033	.0034	.0033	.0032
14	−.0003	.0021	.0028	.0029	.0029	.0028
15	−.0005	.0015	.0023	.0024	.0024	.0023
16	−.0005	.0011	.0016	.0017	.0017	.0017
17	−.0004	.0006	.0010	.0011	.0011	.0010
18	−.0001	.0002	.0003	.0003	.0004	.0004

j	Shear flow, q_{ij}, at station—					
	$i=0$	$i=1$	$i=2$	$i=3$	$i=4$	$i=5$
0	0.2165	0.0701	0.0653	0.0495	0.0384	0.0289
1	.0744	−.0301	−.0189	−.0100	−.0066	−.0035
2	.0910	−.0155	−.0093	−.0060	−.0064	−.0044
3	.0835	−.0083	−.0051	−.0040	−.0034	−.0032
4	.0696	−.0029	−.0029	−.0025	−.0022	−.0023
5	.0630	.0015	−.0013	−.0016	−.0016	−.0017
6	.0384	.0049	.0000	−.0009	−.0011	−.0013
7	.0244	.0071	.0010	−.0004	−.0007	−.0010
8	.0126	.0082	.0017	.0000	−.0006	−.0007
9	.0034	.0081	.0021	.0003	−.0002	−.0006
10	−.0030	.0071	.0021	.0004	−.0001	−.0003
11	−.0070	.0053	.0018	.0006	.0002	−.0002
12	−.0090	.0030	.0013	.0004	.0003	−.0001
13	−.0094	.0006	.0007	.0004	.0004	.0000
14	−.0089	−.0018	−.0001	.0002	.0004	.0001
15	−.0078	−.0038	−.0008	.0001	.0004	.0002
16	−.0067	−.0054	−.0013	.0000	.0005	.0002
17	−.0060	−.0064	−.0017	−.0001	.0004	.0003
18	−.0067	−.0068	−.0018	−.0001	.0004	.0003

TABLE 21.—LOAD DISTRIBUTION DUE TO A UNIT PERTURBATION LOAD

[$B=8$; $C=2\times10^4$; $m=36$]

(a) Concentrated perturbation load on stringer $j=0$ at ring $i=0$

	Stringer load, p_{ij}, at station—						
	$i=0$	$i=1$	$i=2$	$i=3$	$i=4$	$i=5$	$i=6$
0	0.5000	0.0904	0.0355	0.0080	0.0603	0.0551	0.0515
1	0	.1221	.0789	.0653	.0587	.0540	.0506
2	0	.0617	.0663	.0589	.0544	.0508	.0481
3	0	.0345	.0458	.0480	.0470	.0454	.0439
4	0	.0054	.0248	.0341	.0372	.0380	.0380
5	0	−.0012	.0091	.0200	.0261	.0302	.0308
6	0	−.0019	.0006	.0085	.0154	.0199	.0228
7	0	−.0009	−.0023	.0012	.0066	.0113	.0149
8	0	−.0002	−.0023	−.0022	.0000	.0043	.0077
9	0	−.0001	−.0014	−.0030	−.0025	−.0005	.0021
10	0	−.0002	−.0008	−.0025	−.0035	−.0032	−.0018
11	0	−.0004	−.0007	−.0019	−.0034	−.0042	−.0040
12	0	−.0005	−.0008	−.0015	−.0029	−.0042	−.0049
13	0	−.0005	−.0010	−.0015	−.0026	−.0035	−.0040
14	0	−.0006	−.0012	−.0016	−.0023	−.0034	−.0047
15	0	−.0006	−.0013	−.0018	−.0024	−.0033	−.0043
16	0	−.0005	−.0018	−.0019	−.0025	−.0032	−.0041
17	0	−.0007	−.0013	−.0020	−.0026	−.0032	−.0039
18	0	−.0007	−.0013	−.0020	−.0027	−.0032	−.0039

j	Shear flow, $q_{ij}L$, at station—					
	$i=0$	$i=1$	$i=2$	$i=3$	$i=4$	$i=5$
0	0.2048	0.0024	0.0068	0.0038	0.0020	0.0018
1	.0828	.0485	.0184	.0114	.0073	.0062
2	.0210	.0440	.0277	.0160	.0109	.0078
3	−.0034	.0228	.0234	.0170	.0128	.0093
4	−.0039	.0034	.0141	.0140	.0116	.0093
5	−.0076	−.0009	.0029	.0079	.0085	.0077
6	−.0067	−.0094	−.0048	.0011	.0039	.0048
7	−.0048	−.0080	−.0062	−.0043	−.0006	.0012
8	−.0046	−.0000	−.0063	−.0072	−.0045	−.0022
9	−.0045	−.0046	−.0067	−.0076	−.0066	−.0047
10	−.0043	−.0040	−.0061	−.0066	−.0069	−.0061
11	−.0039	−.0037	−.0039	−.0061	−.0061	−.0062
12	−.0034	−.0033	−.0032	−.0038	−.0048	−.0064
13	−.0029	−.0029	−.0027	−.0028	−.0038	−.0042
14	−.0023	−.0023	−.0029	−.0021	−.0024	−.0030
15	−.0016	−.0017	−.0017	−.0015	−.0016	−.0019
16	−.0010	−.0010	−.0010	−.0010	−.0009	−.0010
17	−.0003	−.0003	−.0004	−.0003	−.0003	−.0003

(b) Distributed perturbation load on stringer $j=0$ between rings $i=0$ and $i=1$

j	Stringer load, p_{ij}, at station—					
	$i=1$	$i=2$	$i=3$	$i=4$	$i=5$	$i=6$
0	0.2241	0.0910	0.0754	0.0639	0.0575	0.0532
1	.0652	.0928	.0711	.0622	.0562	.0522
2	.0280	.0663	.0622	.0606	.0525	.0494
3	.0101	.0378	.0474	.0476	.0462	.0446
4	−.0006	.0100	.0302	.0350	.0377	.0381
5	−.0020	.0034	.0150	.0234	.0278	.0301
6	−.0008	−.0015	.0045	.0122	.0176	.0215
7	.0001	−.0021	−.0009	.0039	.0090	.0132
8	.0002	−.0013	−.0026	−.0010	.0025	.0001
9	.0000	−.0006	−.0023	−.0029	−.0010	.0008
10	−.0002	−.0004	−.0017	−.0031	−.0035	−.0026
11	−.0003	−.0005	−.0012	−.0027	−.0039	−.0043
12	−.0003	−.0007	−.0011	−.0022	−.0036	−.0046
13	−.0003	−.0008	−.0012	−.0019	−.0031	−.0044
14	−.0003	−.0009	−.0014	−.0020	−.0029	−.0041
15	−.0003	−.0009	−.0015	−.0021	−.0028	−.0038
16	−.0003	−.0010	−.0016	−.0022	−.0028	−.0036
17	−.0003	−.0010	−.0017	−.0023	−.0029	−.0036
18	−.0003	−.0010	−.0017	−.0024	−.0030	−.0035

j	Shear flow, $q_{ij}L$, at station—					
	$i=0$	$i=1$	$i=2$	$i=3$	$i=4$	$i=5$
0	0.2759	0.0063	0.0031	0.0057	0.0032	0.0022
1	.0585	.0080	.0299	.0146	.0092	.0062
2	.0094	.0403	.0340	.0203	.0132	.0092
3	−.0107	.0126	.0244	.0201	.0146	.0106
4	−.0093	−.0039	.0103	.0144	.0128	.0104
5	−.0058	−.0092	−.0016	.0001	.0064	.0081
6	−.0042	−.0085	−.0075	−.0016	.0027	.0045
7	−.0044	−.0063	−.0037	−.0064	−.0024	.0003
8	−.0048	−.0048	−.0074	−.0080	−.0069	−.0034
9	−.0048	−.0043	−.0066	−.0074	−.0072	−.0066
10	−.0044	−.0041	−.0044	−.0059	−.0069	−.0066
11	−.0039	−.0038	−.0037	−.0045	−.0057	−.0062
12	−.0034	−.0034	−.0032	−.0034	−.0043	−.0052
13	−.0028	−.0029	−.0028	−.0027	−.0031	−.0038
14	−.0023	−.0023	−.0023	−.0022	−.0022	−.0026
15	−.0017	−.0016	−.0017	−.0016	−.0015	−.0017
16	−.0010	−.0010	−.0010	−.0010	−.0009	−.0009
17	−.0004	−.0003	−.0004	−.0003	−.0003	−.0003

(c) Shear perturbation load about shear panel (0,0)

j	Stringer load, p_{ij}/L, at station—					
	$i=1$	$i=2$	$i=3$	$i=4$	$i=5$	$i=6$
1	−0.1030	0.0052	−0.0021	−0.0003	−0.0002	−0.0001
2	−.0040	−.0127	−.0021	−.0013	−.0007	−.0004
3	.0170	−.0066	−.0032	−.0015	−.0009	−.0006
4	.0100	.0021	−.0018	−.0013	−.0009	−.0006
5	.0013	.0047	.0006	−.0006	−.0006	−.0005
6	−.0027	.0030	.0019	.0004	−.0001	−.0002
7	−.0023	.0005	.0018	.0010	.0004	.0001
8	−.0008	−.0009	.0008	.0011	.0007	.0003
9	.0003	−.0010	−.0001	.0006	.0007	.0006
10	.0004	−.0005	−.0005	.0001	.0004	.0004
11	.0002	.0000	−.0005	−.0003	.0001	.0003
12	.0000	.0001	−.0002	−.0004	−.0001	.0001
13	−.0001	.0001	.0000	−.0003	−.0002	−.0001
14	.0000	.0000	.0001	−.0001	−.0002	−.0002
15	.0000	.0000	.0001	.0000	−.0001	−.0002
16	.0000	.0000	.0000	.0000	.0000	−.0001
17	.0000	.0000	.0000	.0000	.0000	−.0001
18	.0000	.0000	.0000	.0000	.0000	.0000

j	Shear flow, q_{ij}, at station—					
	$i=0$	$i=1$	$i=2$	$i=3$	$i=4$	$i=5$
0	0.8324	0.0787	−0.0003	0.0026	0.0009	0.0006
1	.0409	−.0304	.0070	.0008	.0008	.0004
2	.0482	−.0218	−.0035	.0001	.0001	.0002
3	.0142	.0010	−.0061	−.0015	−.0006	−.0002
4	−.0071	.0096	−.0022	−.0020	−.0009	−.0004
5	−.0097	.0062	.0020	−.0010	−.0009	−.0006
6	−.0043	.0004	.0031	.0006	−.0003	−.0004
7	.0002	−.0023	.0018	.0014	.0003	−.0001
8	.0015	−.0020	.0000	.0011	.0007	.0002
9	.0009	−.0007	−.0009	.0004	.0007	.0004
10	.0001	.0002	−.0006	−.0003	.0003	.0004
11	−.0002	.0004	−.0004	−.0005	.0000	.0002
12	−.0002	.0002	.0000	−.0004	−.0002	.0000
13	.0000	.0000	.0002	−.0002	−.0003	−.0001
14	.0000	.0000	.0001	.0000	−.0002	−.0002
15	.0000	−.0001	.0000	.0001	.0000	−.0001
16	.0000	.0000	.0000	.0000	.0000	.0000
17	.0000	.0000	.0000	.0000	.0000	.0000
18	.0000	.0000	.0000	.0000	.0000	.0000

TABLE 22.—LOAD DISTRIBUTION DUE TO A UNIT PERTURBATION LOAD

[$B=30$; $C=2\times10^5$; $m=36$]

(a) Concentrated perturbation load on stringer $j=0$ at ring $i=0$

j	Stringer load, p_q, at station—						
	$i=0$	$i=1$	$i=2$	$i=3$	$i=4$	$i=5$	$i=6$
0	0.5000	0.1639	0.1020	0.0784	0.0665	0.0600	0.0557
1	0	.1002	.0900	.0723	.0634	.0580	.0542
2	0	.0431	.0583	.0653	.0653	.0624	.0499
3	0	.0191	.0356	.0426	.0444	.0443	.0436
4	0	.0073	.0196	.0282	.0330	.0350	.0357
5	0	.0018	.0090	.0166	.0223	.0256	.0275
6	0	−.0003	.0029	.0082	.0133	.0170	.0197
7	0	−.0006	−.0001	.0027	.0064	.0099	.0127
8	0	−.0006	−.0011	−.0003	.0018	.0044	.0070
9	0	−.0003	−.0013	−.0017	−.0010	.0007	.0027
10	0	−.0003	−.0011	−.0020	−.0023	−.0016	−.0003
11	0	−.0004	−.0010	−.0019	−.0028	−.0028	−.0023
12	0	−.0004	−.0010	−.0018	−.0028	−.0034	−.0035
13	0	−.0006	−.0010	−.0017	−.0027	−.0035	−.0041
14	0	−.0006	−.0011	−.0018	−.0026	−.0035	−.0044
15	0	−.0006	−.0012	−.0018	−.0026	−.0035	−.0045
16	0	−.0007	−.0013	−.0019	−.0026	−.0035	−.0046
17	0	−.0007	−.0013	−.0020	−.0026	−.0035	−.0046
18	0	−.0007	−.0014	−.0020	−.0026	−.0035	−.0046

j	Shear flow, q_qL, at station—					
	$i=0$	$i=1$	$i=2$	$i=3$	$i=4$	$i=5$
0	0.1656	0.0334	0.0118	0.0059	0.0033	0.0021
1	.0653	.0477	.0254	.0143	.0087	.0069
2	.0223	.0326	.0254	.0178	.0116	.0064
3	.0030	.0103	.0184	.0159	.0118	.0091
4	−.0042	.0040	.0098	.0111	.0099	.0064
5	−.0061	−.0033	.0022	.0054	.0066	.0064
6	−.0059	−.0063	−.0031	.0003	.0029	.0033
7	−.0053	−.0068	−.0059	−.0035	−.0005	.0009
8	−.0045	−.0063	−.0067	−.0058	−.0032	−.0010
9	−.0045	−.0052	−.0063	−.0063	−.0049	−.0036
10	−.0042	−.0044	−.0054	−.0060	−.0060	−.0048
11	−.0039	−.0038	−.0044	−.0051	−.0060	−.0053
12	−.0034	−.0033	−.0035	−.0041	−.0050	−.0052
13	−.0029	−.0028	−.0028	−.0032	−.0042	−.0046
14	−.0023	−.0023	−.0022	−.0023	−.0032	−.0038
15	−.0017	−.0017	−.0016	−.0016	−.0022	−.0028
16	−.0010	−.0010	−.0010	−.0009	−.0013	−.0017
17	−.0003	−.0004	−.0003	−.0003	−.0004	−.0006

(b) Distributed perturbation load on stringer $j=0$ between rings $i=0$ and $i=1$

j	Stringer load, p_q, at station—					
	$i=1$	$i=2$	$i=3$	$i=4$	$i=5$	$i=6$
0	0.2962	0.1296	0.0887	0.0719	0.0627	0.0569
1	.0683	.0935	.0787	.0676	.0603	.0553
2	.0242	.0528	.0587	.0563	.0537	.0505
3	.0091	.0253	.0396	.0437	.0445	.0440
4	.0026	.0136	.0242	.0309	.0343	.0359
5	.0002	.0062	.0120	.0197	.0243	.0274
6	−.0003	.0010	.0065	.0108	.0155	.0191
7	−.0002	−.0006	.0012	.0045	.0083	.0118
8	−.0001	−.0009	−.0009	.0006	.0031	.0058
9	−.0001	−.0003	−.0015	−.0014	−.0003	.0014
10	−.0001	−.0007	−.0016	−.0022	−.0022	−.0014
11	−.0002	−.0010	−.0014	−.0024	−.0030	−.0031
12	−.0002	−.0007	−.0014	−.0023	−.0032	−.0039
13	−.0003	−.0003	−.0014	−.0022	−.0032	−.0041
14	−.0003	−.0009	−.0014	−.0022	−.0031	−.0041
15	−.0003	−.0009	−.0015	−.0022	−.0030	−.0039
16	−.0003	−.0010	−.0016	−.0023	−.0030	−.0038
17	−.0003	−.0010	−.0017	−.0023	−.0030	−.0037
18	−.0003	−.0010	−.0017	−.0023	−.0030	−.0037

j	Shear flow, q_qL, at station—					
	$i=0$	$i=1$	$i=2$	$i=3$	$i=4$	$i=5$
0	0.2038	0.0833	0.0204	0.0084	0.0040	0.0029
1	.0662	.0580	.0353	.0195	.0110	.0079
2	.0178	.0300	.0293	.0214	.0150	.0105
3	−.0003	.0108	.0190	.0173	.0143	.0112
4	−.0055	−.0002	.0074	.0107	.0108	.0090
5	−.0060	−.0052	−.0004	.0040	.0061	.0066
6	−.0053	−.0066	−.0048	−.0013	.0014	.0030
7	−.0048	−.0063	−.0066	−.0047	−.0023	−.0004
8	−.0046	−.0055	−.0066	−.0062	−.0048	−.0031
9	−.0045	−.0048	−.0058	−.0064	−.0059	−.0049
10	−.0043	−.0042	−.0049	−.0057	−.0060	−.0056
11	−.0039	−.0038	−.0041	−.0048	−.0054	−.0055
12	−.0034	−.0034	−.0034	−.0038	−.0044	−.0048
13	−.0029	−.0029	−.0028	−.0030	−.0034	−.0039
14	−.0023	−.0023	−.0022	−.0023	−.0026	−.0030
15	−.0017	−.0017	−.0016	−.0016	−.0017	−.0020
16	−.0010	−.0010	−.0010	−.0010	−.0010	−.0011
17	−.0004	−.0003	−.0003	−.0003	−.0003	−.0004

(c) Shear perturbation load about shear panel (0,0)

j	Stringer load, p_qL, at station—					
	$i=1$	$i=2$	$i=3$	$i=4$	$i=5$	$i=6$
1	−0.2028	−0.0317	−0.0078	−0.0029	−0.0014	−0.0008
2	−.0047	−.0276	−.0131	−.0069	−.0034	−.0020
3	.0241	−.0061	−.0080	−.0058	−.0038	−.0025
4	.0184	.0057	−.0016	−.0031	−.0028	−.0022
5	.0070	.0080	.0026	−.0002	−.0012	−.0014
6	−.0006	.0053	.0041	.0018	.0003	−.0003
7	−.0032	.0023	.0036	.0026	.0014	.0005
8	−.0025	−.0003	.0020	.0023	.0018	.0011
9	−.0010	−.0014	.0006	.0016	.0016	.0013
10	.0000	−.0013	−.0005	.0005	.0010	.0011
11	.0004	−.0008	−.0009	−.0002	.0004	.0007
12	.0003	−.0003	−.0008	−.0005	−.0001	.0003
13	.0001	.0001	−.0005	−.0006	−.0001	−.0001
14	.0000	.0001	−.0002	−.0005	−.0005	−.0003
15	−.0001	.0001	.0000	−.0002	−.0004	−.0004
16	.0000	.0000	.0001	−.0001	−.0003	−.0004
17	.0000	.0000	.0001	.0000	−.0002	−.0002
18	.0000	.0000	.0000	.0000	.0000	−.0001

j	Shear flow, q_q, at station—					
	$i=0$	$i=1$	$i=2$	$i=3$	$i=4$	$i=5$
0	0.6667	0.1254	0.0259	0.0067	0.0040	0.0022
1	.0702	−.0520	.0090	.0037	.0025	.0016
2	.0656	−.0228	−.0124	−.0030	−.0004	.0003
3	.0375	−.0000	−.0095	−.0053	−.0024	−.0011
4	.0008	.0120	−.0022	−.0038	−.0027	−.0016
5	−.0133	.0111	.0032	−.0010	−.0017	−.0015
6	−.0120	.0047	.0048	.0014	−.0003	−.0006
7	−.0057	−.0008	.0036	.0024	.0009	.0000
8	−.0006	−.0031	.0013	.0031	.0014	.0007
9	.0015	−.0028	−.0000	.0011	.0013	.0010
10	.0014	−.0014	−.0014	.0001	.0008	.0009
11	.0006	−.0002	−.0013	−.0000	.0002	.0006
12	.0000	.0003	−.0007	−.0008	−.0003	.0002
13	−.0002	.0004	−.0002	−.0000	−.0006	−.0001
14	−.0002	.0002	.0001	−.0004	−.0006	−.0003
15	−.0001	.0001	.0002	−.0001	−.0003	−.0003
16	.0000	.0000	.0001	.0001	−.0001	−.0002
17	.0001	.0000	.0001	.0002	.0000	−.0002
18	.0001	.0000	.0000	.0002	.0001	−.0001

TABLE 23.—LOAD DISTRIBUTION DUE TO A UNIT PERTURBATION LOAD

[$B=100$; $\Sigma C=2\times10^5$; $n=30$]

(a) Concentrated perturbation load on stringer $j=0$ at ring $i=0$

j	Stringer load, p_{ij}, at station—						
	$i=0$	$i=1$	$i=2$	$i=3$	$i=4$	$i=5$	$i=6$
0	0.5000	0.2600	0.1503	0.1127	0.0980	0.0747	0.0659
1	0	.0743	.0856	.0809	.0734	.0656	.0612
2	0	.0286	.0429	.0503	.0590	.0594	.0512
3	0	.0126	.0238	.0316	.0365	.0393	.0406
4	0	.0064	.0138	.0202	.0251	.0287	.0312
5	0	.0031	.0078	.0126	.0168	.0203	.0231
6	0	.0014	.0040	.0074	.0107	.0138	.0164
7	0	.0005	.0018	.0038	.0063	.0066	.0109
8	0	.0000	.0004	.0015	.0029	.0047	.0064
9	0	−.0002	−.0003	.0000	.0007	.0017	.0030
10	0	−.0003	−.0007	−.0009	−.0008	−.0003	.0004
11	0	−.0004	−.0008	−.0014	−.0017	−.0017	−.0015
12	0	−.0004	−.0010	−.0016	−.0022	−.0026	−.0028
13	0	−.0005	−.0010	−.0018	−.0024	−.0031	−.0036
14	0	−.0005	−.0012	−.0019	−.0026	−.0034	−.0040
15	0	−.0005	−.0012	−.0019	−.0027	−.0035	−.0043
16	0	−.0007	−.0013	−.0020	−.0027	−.0035	−.0044
17	0	−.0007	−.0014	−.0020	−.0028	−.0036	−.0045
18	0	−.0007	−.0014	−.0020	−.0028	−.0036	−.0045

j	Shear flow, $q_{ij}L$, at station—					
	$i=0$	$i=1$	$i=2$	$i=3$	$i=4$	$i=5$
0	0.1200	0.0604	0.0233	0.0120	0.0059	0.0044
1	.0457	.0290	.0251	.0195	.0137	.0096
2	.0192	.0226	.0206	.0172	.0130	.0110
3	.0066	.0114	.0128	.0124	.0111	.0097
4	.0003	.0040	.0064	.0074	.0076	.0072
5	−.0028	−.0007	.0016	.0032	.0041	.0044
6	−.0042	−.0034	−.0017	−.0001	.0010	.0018
7	−.0040	−.0047	−.0037	−.0025	−.0014	−.0005
8	−.0047	−.0051	−.0048	−.0040	−.0031	−.0023
9	−.0045	−.0049	−.0051	−.0048	−.0042	−.0035
10	−.0042	−.0045	−.0049	−.0049	−.0046	−.0042
11	−.0038	−.0040	−.0044	−.0046	−.0049	−.0044
12	−.0034	−.0035	−.0038	−.0040	−.0042	−.0042
13	−.0029	−.0029	−.0031	−.0034	−.0036	−.0037
14	−.0023	−.0023	−.0024	−.0026	−.0028	−.0030
15	−.0017	−.0017	−.0017	−.0018	−.0020	−.0022
16	−.0010	−.0010	−.0010	−.0011	−.0012	−.0014
17	−.0003	−.0003	−.0003	−.0004	−.0004	−.0004

(b) Distributed perturbation load on stringer $j=0$ between rings $i=0$ and $i=1$

j	Stringer load, p_{ij}, at station—					
	$i=1$	$i=2$	$i=3$	$i=4$	$i=5$	$i=6$
0	0.3632	0.2032	0.1334	0.0995	0.0811	0.0700
1	.0454	.0522	.0537	.0771	.0699	.0638
2	.0140	.0356	.0471	.0517	.0626	.0519
3	.0003	.0185	.0280	.0343	.0380	.0400
4	.0030	.0101	.0171	.0223	.0270	.0303
5	.0013	.0054	.0102	.0148	.0187	.0218
6	.0006	.0026	.0057	.0091	.0123	.0151
7	.0002	.0010	.0027	.0050	.0074	.0098
8	.0000	.0002	.0009	.0022	.0038	.0056
9	−.0001	−.0003	−.0002	.0003	.0012	.0023
10	−.0001	−.0005	−.0008	−.0009	−.0006	.0000
11	−.0002	−.0006	−.0011	−.0015	−.0017	−.0016
12	−.0002	−.0007	−.0013	−.0019	−.0024	−.0027
13	−.0003	−.0008	−.0014	−.0021	−.0028	−.0033
14	−.0003	−.0009	−.0015	−.0022	−.0030	−.0037
15	−.0003	−.0009	−.0016	−.0022	−.0031	−.0039
16	−.0003	−.0010	−.0016	−.0024	−.0031	−.0040
17	−.0003	−.0010	−.0017	−.0024	−.0032	−.0040
18	−.0003	−.0010	−.0017	−.0024	−.0032	−.0040

j	Shear flow, $q_{ij}L$, at station—					
	$i=0$	$i=1$	$i=2$	$i=3$	$i=4$	$i=5$
0	0.1368	0.0800	0.0349	0.0189	0.0092	0.0055
1	.0489	.0432	.0334	.0236	.0164	.0110
2	.0180	.0216	.0218	.0190	.0156	.0124
3	.0066	.0094	.0123	.0127	.0118	.0104
4	−.0004	.0022	.0064	.0070	.0076	.0074
5	−.0031	−.0019	.0005	.0026	.0037	.0043
6	−.0042	−.0039	−.0026	−.0009	.0005	.0014
7	−.0046	−.0048	−.0043	−.0031	−.0020	−.0009
8	−.0045	−.0049	−.0050	−.0044	−.0036	−.0027
9	−.0044	−.0047	−.0050	−.0049	−.0045	−.0038
10	−.0042	−.0043	−.0047	−.0049	−.0045	−.0044
11	−.0038	−.0039	−.0042	−.0045	−.0046	−.0045
12	−.0034	−.0034	−.0038	−.0039	−.0041	−.0042
13	−.0029	−.0029	−.0030	−.0032	−.0035	−.0037
14	−.0023	−.0023	−.0023	−.0025	−.0027	−.0030
15	−.0017	−.0017	−.0017	−.0018	−.0019	−.0021
16	−.0010	−.0010	−.0010	−.0010	−.0012	−.0013
17	−.0003	−.0003	−.0003	−.0004	−.0004	−.0004

(c) Shear perturbation load about shear panel (0,0)

j	Stringer load, p_{ij}/L, at station—					
	$i=1$	$i=2$	$i=3$	$i=4$	$i=5$	$i=6$
1	−0.3086	−0.1174	−0.0476	−0.0210	−0.0102	−0.0054
2	−.0042	−.0303	−.0305	−.0213	−.0142	−.0094
3	.0229	−.0022	−.0099	−.0109	−.0090	−.0078
4	.0211	.0080	.0004	−.0031	−.0044	−.0045
5	.0127	.0100	.0048	.0014	−.0006	−.0017
6	.0047	.0083	.0060	.0045	.0017	.0004
7	−.0004	.0051	.0053	.0041	.0028	.0017
8	−.0025	.0021	.0038	.0037	.0031	.0023
9	−.0025	−.0001	.0020	.0027	.0027	.0023
10	−.0010	−.0012	.0006	.0015	.0020	.0020
11	−.0006	−.0015	−.0005	.0005	.0011	.0014
12	.0000	−.0012	−.0010	−.0003	.0003	.0005
13	.0003	−.0007	−.0010	−.0007	−.0002	.0002
14	.0003	−.0003	−.0006	−.0006	−.0006	−.0002
15	.0001	.0000	−.0006	−.0006	−.0007	−.0004
16	.0000	.0001	−.0003	−.0006	−.0006	−.0005
17	.0000	.0001	−.0001	−.0004	−.0004	−.0003
18	.0000	.0000	.0000	−.0001	−.0002	−.0001

j	Shear flow, q_{ij}, at station—					
	$i=0$	$i=1$	$i=2$	$i=3$	$i=4$	$i=5$
0	0.4876	0.1291	0.0580	0.0272	0.0140	0.0080
1	.1006	−.0801	−.0118	.0006	.0032	.0022
2	.1092	−.0280	−.0175	−.0087	−.0039	−.0015
3	.0633	−.0028	−.0068	−.0078	−.0052	−.0033
4	.0212	.0102	−.0022	−.0043	−.0039	−.0032
5	−.0043	.0130	.0029	−.0008	−.0020	−.0021
6	−.0137	.0064	.0052	.0016	−.0001	−.0006
7	−.0128	.0029	.0060	.0028	.0012	.0002
8	−.0079	−.0007	.0033	.0020	.0019	.0010
9	−.0030	−.0031	.0012	.0022	.0019	.0014
10	.0002	−.0034	−.0005	.0011	.0016	.0013
11	.0013	−.0025	−.0014	.0001	.0008	.0010
12	.0013	−.0013	−.0016	−.0006	.0002	.0006
13	.0007	−.0003	−.0013	−.0009	−.0002	.0002
14	.0002	.0002	−.0008	−.0009	−.0005	−.0002
15	−.0001	.0004	−.0003	−.0006	−.0006	−.0004
16	−.0001	.0003	.0001	−.0003	−.0006	−.0006
17	−.0001	.0002	.0003	−.0001	−.0005	−.0007
18	−.0001	.0001	.0004	.0000	−.0005	−.0007

TABLE 24.—LOAD DISTRIBUTION DUE TO A UNIT PERTURBATION LOAD

[$B=300$; $C=2\times10^6$; $m=36$]

(a) Concentrated perturbation load on stringer $j=0$ at ring $i=0$

j	Stringer load, p_{ij}, at station—						
	$i=0$	$i=1$	$i=2$	$i=3$	$i=4$	$i=5$	$i=6$
0	0.5000	0.3368	0.2384	0.1776	0.1390	0.1136	0.0963
1	0	.0518	.0733	.0801	.0800	.0770	.0729
2	0	.0157	.0283	.0372	.0431	.0457	.0456
3	0	.0076	.0147	.0208	.0258	.0298	.0328
4	0	.0044	.0089	.0131	.0169	.0202	.0230
5	0	.0027	.0057	.0087	.0115	.0141	.0165
6	0	.0016	.0036	.0058	.0079	.0099	.0118
7	0	.0009	.0022	.0037	.0052	.0067	.0082
8	0	.0005	.0012	.0021	.0031	.0042	.0054
9	0	.0002	.0005	.0010	.0016	.0023	.0030
10	0	.0000	.0000	.0001	.0004	.0007	.0012
11	0	−.0002	−.0004	−.0006	−.0006	−.0005	−.0004
12	0	−.0003	−.0007	−.0010	−.0013	−.0015	−.0016
13	0	−.0004	−.0009	−.0014	−.0018	−.0022	−.0025
14	0	−.0005	−.0011	−.0016	−.0022	−.0027	−.0032
15	0	−.0006	−.0012	−.0018	−.0024	−.0031	−.0037
16	0	−.0006	−.0013	−.0019	−.0026	−.0033	−.0040
17	0	−.0007	−.0013	−.0020	−.0027	−.0035	−.0042
18	0	−.0007	−.0013	−.0020	−.0028	−.0036	−.0043

j	Shear flow, $q_{ij}L$, at station—					
	$i=0$	$i=1$	$i=2$	$i=3$	$i=4$	$i=5$
0	0.0316	0.0492	0.0304	0.0193	0.0127	0.0086
1	.0293	.0277	.0236	.0194	.0157	.0126
2	.0141	.0151	.0140	.0135	.0122	.0107
3	.0065	.0080	.0085	.0085	.0082	.0077
4	.0022	.0035	.0043	.0048	.0049	.0049
5	−.0005	.0004	.0013	.0019	.0023	.0026
6	−.0031	−.0010	−.0006	−.0003	.0003	.0006
7	−.0031	−.0028	−.0023	−.0017	−.0013	−.0009
8	−.0035	−.0035	−.0032	−.0028	−.0024	−.0020
9	−.0037	−.0038	−.0037	−.0034	−.0031	−.0028
10	−.0037	−.0038	−.0038	−.0037	−.0035	−.0032
11	−.0036	−.0036	−.0037	−.0036	−.0035	−.0034
12	−.0031	−.0032	−.0034	−.0034	−.0034	−.0033
13	−.0027	−.0028	−.0029	−.0030	−.0030	−.0030
14	−.0022	−.0022	−.0023	−.0024	−.0025	−.0025
15	−.0016	−.0016	−.0017	−.0018	−.0018	−.0019
16	−.0010	−.0010	−.0010	−.0011	−.0011	−.0012
17	−.0003	−.0003	−.0004	−.0004	−.0004	−.0004

(b) Distributed perturbation load on stringer $j=0$ between rings $i=0$ and $i=1$

j	Stringer load, p_{ij}, at station—					
	$i=1$	$i=2$	$i=3$	$i=4$	$i=5$	$i=6$
0	0.4116	0.2837	0.2057	0.1569	0.1254	0.1044
1	.0293	.0642	.0775	.0804	.0785	.0750
2	.0090	.0223	.0330	.0404	.0451	.0477
3	.0038	.0112	.0179	.0234	.0279	.0313
4	.0021	.0067	.0110	.0150	.0180	.0216
5	.0013	.0042	.0072	.0101	.0129	.0154
6	.0006	.0026	.0047	.0068	.0089	.0109
7	.0004	.0015	.0029	.0044	.0060	.0075
8	.0002	.0008	.0016	.0026	.0037	.0048
9	.0001	.0003	.0007	.0013	.0019	.0027
10	.0000	−.0001	.0000	.0002	.0005	.0009
11	−.0001	−.0003	−.0005	−.0006	−.0005	−.0004
12	−.0002	−.0005	−.0009	−.0012	−.0014	−.0015
13	−.0002	−.0007	−.0011	−.0016	−.0020	−.0023
14	−.0003	−.0008	−.0013	−.0019	−.0024	−.0029
15	−.0003	−.0009	−.0015	−.0021	−.0028	−.0034
16	−.0003	−.0009	−.0016	−.0023	−.0030	−.0037
17	−.0003	−.0010	−.0016	−.0024	−.0031	−.0038
18	−.0003	−.0010	−.0017	−.0024	−.0031	−.0039

j	Shear flow, $q_{ij}L$, at station—					
	$i=0$	$i=1$	$i=2$	$i=3$	$i=4$	$i=5$
0	0.0884	0.0640	0.0390	0.0244	0.0158	0.0106
1	.0298	.0290	.0257	.0215	.0175	.0141
2	.0138	.0148	.0149	.0141	.0129	.0115
3	.0062	.0074	.0083	.0086	.0084	.0080
4	.0019	.0028	.0039	.0046	.0049	.0049
5	−.0007	.0000	.0009	.0016	.0021	.0024
6	−.0022	−.0019	−.0013	−.0006	.0000	.0004
7	−.0031	−.0030	−.0026	−.0020	−.0015	−.0011
8	−.0035	−.0036	−.0034	−.0030	−.0026	−.0022
9	−.0037	−.0038	−.0038	−.0036	−.0032	−.0030
10	−.0036	−.0038	−.0038	−.0038	−.0036	−.0034
11	−.0034	−.0036	−.0037	−.0037	−.0036	−.0035
12	−.0031	−.0032	−.0033	−.0034	−.0034	−.0033
13	−.0027	−.0027	−.0028	−.0029	−.0030	−.0030
14	−.0022	−.0022	−.0023	−.0024	−.0025	−.0025
15	−.0016	−.0016	−.0017	−.0017	−.0018	−.0018
16	−.0010	−.0010	−.0010	−.0011	−.0011	−.0011
17	−.0003	−.0003	−.0003	−.0004	−.0004	−.0004

(c) Shear perturbation load about shear panel (0,0)

j	Stringer load, p_{ij}/L, at station—					
	$i=1$	$i=2$	$i=3$	$i=4$	$i=5$	$i=6$
1	−0.3752	−0.2169	−0.1207	−0.0754	−0.0459	−0.0287
2	−.0033	−.0348	−.0400	−.0367	−.0310	−.0251
3	.0182	−.0004	−.0033	−.0118	−.0130	−.0129
4	.0191	.0078	.0018	−.0017	−.0038	−.0061
5	.0147	.0097	.0055	.0026	.0006	−.0008
6	.0080	.0090	.0065	.0044	.0028	.0015
7	.0037	.0070	.0063	.0049	.0037	.0027
8	.0002	.0040	.0051	.0046	.0039	.0032
9	−.0016	.0023	.0037	.0038	.0035	.0031
10	−.0020	.0005	.0023	.0028	.0020	.0028
11	−.0017	−.0007	.0009	.0017	.0021	.0023
12	−.0011	−.0012	−.0001	.0007	.0013	.0017
13	−.0006	−.0013	−.0007	.0000	.0006	.0011
14	.0000	−.0011	−.0010	−.0005	.0001	.0006
15	.0002	−.0008	−.0010	−.0007	−.0002	.0003
16	.0002	−.0005	−.0008	−.0007	−.0003	.0001
17	.0002	−.0002	−.0005	−.0005	−.0003	.0000
18	.0001	−.0001	−.0002	−.0002	−.0001	.0000

j	Shear flow, q_{ij}, at station—					
	$i=0$	$i=1$	$i=2$	$i=3$	$i=4$	$i=5$
0	0.3601	0.1036	0.0688	0.0437	0.0282	0.0187
1	.1106	−.0647	−.0214	−.0076	−.0013	.0014
2	.1170	−.0231	−.0102	−.0108	−.0071	−.0044
3	.0306	−.0045	−.0084	−.0073	−.0060	−.0046
4	.0423	.0069	−.0024	−.0038	−.0037	−.0034
5	.0120	.0119	.0019	−.0009	−.0017	−.0020
6	−.0048	.0117	.0044	.0012	−.0001	−.0007
7	−.0123	.0064	.0053	.0026	.0011	.0003
8	−.0130	.0040	.0046	.0030	.0018	.0010
9	−.0065	.0001	.0032	.0028	.0021	.0014
10	−.0064	−.0024	.0018	.0022	.0020	.0015
11	−.0020	−.0034	.0000	.0014	.0016	.0014
12	.0002	−.0033	−.0010	.0006	.0010	.0010
13	.0011	−.0025	−.0015	−.0002	.0004	.0006
14	.0011	−.0014	−.0015	−.0008	−.0002	.0000
15	.0007	−.0005	−.0012	−.0011	−.0007	−.0005
16	.0002	.0002	−.0009	−.0012	−.0011	−.0008
17	−.0001	.0000	−.0006	−.0013	−.0013	−.0011
18	−.0003	.0007	−.0004	−.0013	−.0014	−.0012

TABLE 25.—LOAD DISTRIBUTION DUE TO A UNIT PERTURBATION LOAD

[B=1,000; C=2×10⁶; m=36]

(a) Concentrated perturbation load on stringer j=0 at ring i=0

j	Stringer load, p_{ij}, at station—						
	i=0	i=1	i=2	i=3	i=4	i=5	i=6
0	0.5000	0.4004	0.3251	0.2679	0.2241	0.1903	0.1640
1	0	.0335	.0533	.0601	.0735	.0772	.0786
2	0	.0085	.0165	.0234	.0293	.0341	.0380
3	0	.0042	.0082	.0120	.0155	.0188	.0218
4	0	.0025	.0051	.0075	.0099	.0122	.0143
5	0	.0017	.0034	.0052	.0069	.0085	.0101
6	0	.0012	.0024	.0037	.0049	.0061	.0074
7	0	.0008	.0017	.0026	.0035	.0044	.0053
8	0	.0005	.0011	.0017	.0024	.0030	.0037
9	0	.0003	.0006	.0010	.0014	.0019	.0023
10	0	.0001	.0002	.0004	.0006	.0009	.0011
11	0	.0000	.0000	−.0001	.0000	.0000	.0001
12	0	−.0002	−.0003	−.0005	−.0006	−.0007	−.0008
13	0	−.0003	−.0006	−.0008	−.0010	−.0013	−.0015
14	0	−.0004	−.0007	−.0011	−.0015	−.0018	−.0021
15	0	−.0004	−.0009	−.0013	−.0018	−.0022	−.0026
16	0	−.0005	−.0010	−.0015	−.0020	−.0025	−.0029
17	0	−.0005	−.0010	−.0016	−.0021	−.0027	−.0031
18	0	−.0005	−.0011	−.0016	−.0021	−.0027	−.0032

j	Shear flow, $q_{ij}L$, at station—					
	i=0	i=1	i=2	i=3	i=4	i=5
0	0.0498	0.0376	0.0286	0.0219	0.0169	0.0132
1	.0173	.0168	.0188	.0145	.0131	.0118
2	.0089	.0090	.0089	.0086	.0083	.0079
3	.0046	.0049	.0050	.0051	.0050	.0050
4	.0020	.0024	.0026	.0027	.0028	.0028
5	.0003	.0006	.0009	.0010	.0011	.0012
6	−.0008	−.0006	−.0004	−.0002	−.0001	.0000
7	−.0016	−.0015	−.0013	−.0011	−.0010	−.0009
8	−.0022	−.0021	−.0019	−.0018	−.0016	−.0015
9	−.0024	−.0024	−.0023	−.0022	−.0021	−.0020
10	−.0026	−.0026	−.0025	−.0024	−.0023	−.0022
11	−.0025	−.0025	−.0025	−.0024	−.0024	−.0023
12	−.0023	−.0024	−.0024	−.0023	−.0023	−.0022
13	−.0020	−.0021	−.0021	−.0021	−.0020	−.0020
14	−.0017	−.0017	−.0018	−.0017	−.0017	−.0017
15	−.0012	−.0013	−.0013	−.0013	−.0013	−.0012
16	−.0008	−.0008	−.0008	−.0008	−.0008	−.0008
17	−.0002	−.0003	−.0003	−.0003	−.0003	−.0003

(b) Distributed perturbation load on stringer j=0 between rings i=0 and i=1

j	Stringer load, p_{ij}, at station—					
	i=1	i=2	i=3	i=4	i=5	i=6
0	0.4479	0.3610	0.2963	0.2451	0.2065	0.1760
1	.0174	.0437	.0602	.0701	.0756	.0781
2	.0043	.0126	.0200	.0264	.0318	.0361
3	.0021	.0063	.0101	.0138	.0172	.0203
4	.0013	.0038	.0063	.0087	.0110	.0132
5	.0008	.0026	.0043	.0060	.0077	.0092
6	.0006	.0018	.0031	.0043	.0055	.0068
7	.0004	.0012	.0021	.0030	.0040	.0049
8	.0003	.0008	.0014	.0021	.0027	.0034
9	.0001	.0005	.0008	.0012	.0017	.0021
10	.0001	.0002	.0003	.0006	.0008	.0010
11	.0000	−.0001	−.0001	.0000	.0000	.0001
12	−.0001	−.0003	−.0004	−.0005	−.0006	−.0007
13	−.0001	−.0004	−.0007	−.0010	−.0012	−.0014
14	−.0002	−.0006	−.0009	−.0013	−.0016	−.0020
15	−.0002	−.0007	−.0011	−.0015	−.0020	−.0024
16	−.0002	−.0007	−.0012	−.0017	−.0022	−.0027
17	−.0003	−.0008	−.0013	−.0018	−.0024	−.0029
18	−.0003	−.0008	−.0013	−.0019	−.0024	−.0030

j	Shear flow, $q_{ij}L$, at station—					
	i=0	i=1	i=2	i=3	i=4	i=5
0	0.0521	0.0434	0.0329	0.0251	0.0193	0.0149
1	.0173	.0172	.0164	.0152	.0138	.0125
2	.0087	.0089	.0089	.0088	.0085	.0081
3	.0045	.0048	.0050	.0051	.0051	.0050
4	.0020	.0022	.0025	.0027	.0028	.0028
5	.0003	.0005	.0008	.0010	.0011	.0012
6	−.0009	−.0007	−.0006	−.0003	−.0001	.0000
7	−.0017	−.0016	−.0014	−.0012	−.0011	−.0010
8	−.0022	−.0021	−.0020	−.0008	−.0017	−.0016
9	−.0024	−.0024	−.0024	−.0022	−.0021	−.0020
10	−.0026	−.0026	−.0025	−.0024	−.0024	−.0023
11	−.0025	−.0025	−.0025	−.0026	−.0024	−.0023
12	−.0023	−.0024	−.0024	−.0024	−.0023	−.0022
13	−.0020	−.0021	−.0021	−.0021	−.0020	−.0020
14	−.0017	−.0017	−.0017	−.0017	−.0017	−.0017
15	−.0012	−.0013	−.0013	−.0013	−.0012	−.0013
16	−.0008	−.0008	−.0008	−.0008	−.0008	−.0008
17	−.0002	−.0003	−.0003	−.0003	−.0003	−.0003

(c) Shear perturbation load about shear panel (0,0)

j	Stringer load, p_{ij}/L, at station—					
	i=1	i=2	i=3	i=4	i=5	i=6
1	−0.4263	−0.3156	−0.2340	−0.1742	−0.1303	−0.0980
2	−.0020	−.0266	−.0372	−.0414	−.0419	−.0403
3	.0127	.0005	−.0062	−.0090	−.0116	−.0132
4	.0149	.0001	.0022	−.0004	−.0022	−.0036
5	.0135	.0079	.0048	.0028	.0014	.0003
6	.0104	.0081	.0068	.0042	.0030	.0022
7	.0069	.0073	.0060	.0047	.0038	.0031
8	.0037	.0059	.0064	.0047	.0041	.0036
9	.0012	.0043	.0046	.0043	.0040	.0037
10	−.0004	.0027	.0036	.0038	.0037	.0036
11	−.0013	.0013	.0025	.0030	.0033	.0033
12	−.0015	.0002	.0015	.0023	.0027	.0030
13	−.0013	−.0006	.0007	.0016	.0022	.0025
14	−.0010	−.0009	.0001	.0011	.0017	.0020
15	−.0006	−.0010	−.0002	.0006	.0012	.0016
16	−.0003	−.0009	−.0003	.0003	.0008	.0011
17	−.0001	−.0006	−.0003	.0001	.0004	.0007
18	.0000	−.0002	−.0001	.0000	.0001	.0002

j	Shear flow, q_{ij}, at station—					
	i=0	i=1	i=2	i=3	i=4	i=5
0	0.2580	0.0680	0.0590	0.0465	0.0363	0.0285
1	.1107	−.0426	−.0228	−.0123	−.0075	−.0048
2	.1148	−.0180	−.0121	−.0091	−.0070	−.0054
3	.0863	−.0058	−.0064	−.0064	−.0045	−.0038
4	.0590	.0030	−.0024	−.0023	−.0026	−.0024
5	.0326	.0086	.0006	−.0008	−.0012	−.0014
6	.0118	.0109	.0029	.0007	−.0001	−.0005
7	−.0020	.0105	.0044	.0019	.0008	.0002
8	−.0093	.0083	.0048	.0029	.0014	.0007
9	−.0117	.0061	.0046	.0029	.0018	.0010
10	−.0108	.0020	.0037	.0027	.0018	.0011
11	−.0082	−.0006	.0025	.0022	.0016	.0010
12	−.0053	−.0023	.0011	.0014	.0011	.0008
13	−.0026	−.0030	−.0001	.0006	.0006	.0006
14	−.0008	−.0030	−.0012	−.0004	−.0001	.0001
15	.0004	−.0026	−.0020	−.0012	−.0006	−.0003
16	.0010	−.0020	−.0026	−.0019	−.0011	−.0006
17	.0013	−.0016	−.0029	−.0023	−.0014	−.0008
18	.0013	−.0014	−.0030	−.0024	−.0016	−.0008

TABLE 26.—LOAD DISTRIBUTION DUE TO A UNIT PERTURBATION LOAD

[$B=8$; $C=3\times10^6$; $m=36$]

(a) Concentrated perturbation load on stringer $j=0$ at ring $i=0$

j	Stringer load, p_{ij}, at station—						
	$i=0$	$i=1$	$i=2$	$i=3$	$i=4$	$i=5$	$i=6$
0	0.5000	0.1265	0.1066	0.0889	0.0755	0.0683	0.0632
1	0	.1386	.0944	.0820	.0726	.0663	.0617
2	0	.0497	.0723	.0678	.0638	.0600	.0568
3	0	.0061	.0348	.0461	.0489	.0491	.0484
4	0	−.0035	.0071	.0220	.0304	.0348	.0370
5	0	−.0016	−.0030	.0045	.0132	.0197	.0240
6	0	.0001	−.0028	−.0028	.0017	.0071	.0120
7	0	.0002	−.0008	−.0031	−.0030	−.0005	.0029
8	0	−.0001	.0000	−.0014	−.0031	−.0034	−.0031
9	0	−.0002	−.0001	−.0005	−.0018	−.0032	−.0037
10	0	−.0002	−.0004	−.0004	−.0009	−.0021	−.0032
11	0	−.0002	−.0005	−.0006	−.0008	−.0014	−.0024
12	0	−.0003	−.0005	−.0006	−.0010	−.0012	−.0018
13	0	−.0003	−.0005	−.0009	−.0012	−.0014	−.0017
14	0	−.0003	−.0005	−.0010	−.0013	−.0016	−.0018
15	0	−.0003	−.0007	−.0010	−.0014	−.0018	−.0021
16	0	−.0004	−.0007	−.0011	−.0015	−.0018	−.0022
17	0	−.0004	−.0007	−.0011	−.0015	−.0019	−.0023
18	0	−.0004	−.0008	−.0011	−.0015	−.0019	−.0023

j	Shear flow, $q_{ij}L$, at station—					
	$i=0$	$i=1$	$i=2$	$i=3$	$i=4$	$i=5$
0	0.1807	0.0100	0.0103	0.0053	0.0036	0.0026
1	.0481	.0542	.0228	.0146	.0099	.0072
2	−.0016	.0316	.0272	.0187	.0137	.0104
3	−.0076	.0028	.0160	.0159	.0134	.0110
4	−.0041	−.0079	.0011	.0075	.0091	.0083
5	−.0025	−.0064	−.0064	−.0012	.0026	.0045
6	−.0026	−.0034	−.0064	−.0057	−.0029	−.0003
7	−.0029	−.0025	−.0041	−.0056	−.0054	−.0033
8	−.0028	−.0026	−.0027	−.0041	−.0051	−.0060
9	−.0026	−.0026	−.0024	−.0027	−.0035	−.0045
10	−.0024	−.0024	−.0023	−.0023	−.0026	−.0034
11	−.0022	−.0023	−.0022	−.0020	−.0020	−.0024
12	−.0019	−.0019	−.0019	−.0019	−.0018	−.0018
13	−.0016	−.0016	−.0016	−.0016	−.0016	−.0015
14	−.0013	−.0013	−.0013	−.0013	−.0013	−.0012
15	−.0009	−.0009	−.0009	−.0009	−.0009	−.0009
16	−.0006	−.0006	−.0006	−.0006	−.0006	−.0006
17	−.0002	−.0002	−.0002	−.0002	−.0002	−.0002

(b) Distributed perturbation load on stringer $j=0$ between rings $i=0$ and $i=1$

j	Stringer load, p_{ij}, at station—					
	$i=1$	$i=2$	$i=3$	$i=4$	$i=5$	$i=6$
0	0.2528	0.1180	0.0949	0.0804	0.0717	0.0657
1	.1049	.1114	.0880	.0769	.0693	.0638
2	.0247	.0656	.0700	.0668	.0618	.0664
3	−.0025	.0222	.0416	.0478	.0491	.0488
4	−.0028	.0006	.0152	.0267	.0328	.0360
5	.0032	−.0034	.0003	.0090	.0168	.0220
6	.0006	−.0013	−.0034	−.0008	.0044	.0096
7	.0000	.0001	−.0021	−.0033	−.0019	.0012
8	−.0002	.0001	−.0006	−.0024	−.0034	−.0029
9	−.0001	−.0002	−.0002	−.0011	−.0025	−.0035
10	−.0001	−.0003	−.0004	−.0006	−.0015	−.0027
11	−.0001	−.0003	−.0006	−.0007	−.0010	−.0018
12	−.0001	−.0004	−.0007	−.0009	−.0011	−.0015
13	−.0002	−.0004	−.0008	−.0011	−.0013	−.0015
14	−.0002	−.0005	−.0008	−.0012	−.0015	−.0018
15	−.0002	−.0005	−.0009	−.0012	−.0016	−.0019
16	−.0002	−.0005	−.0009	−.0013	−.0016	−.0020
17	−.0002	−.0006	−.0009	−.0013	−.0017	−.0020
18	−.0002	−.0006	−.0009	−.0013	−.0017	−.0021

j	Shear flow, $q_{ij}L$, at station—					
	$i=0$	$i=1$	$i=2$	$i=3$	$i=4$	$i=5$
0	0.2472	0.0074	0.0110	0.0073	0.0043	0.0030
1	.0373	.0610	.0349	.0184	.0120	.0084
2	−.0123	.0201	.0305	.0226	.0160	.0119
3	−.0071	−.0047	.0112	.0163	.0147	.0122
4	−.0015	−.0060	−.0035	.0040	.0085	.0090
5	−.0020	−.0043	−.0073	−.0036	.0009	.0037
6	−.0031	−.0034	−.0062	−.0064	−.0043	−.0015
7	−.0031	−.0025	−.0031	−.0061	−.0057	−.0046
8	−.0027	−.0028	−.0025	−.0034	−.0047	−.0052
9	−.0025	−.0026	−.0025	−.0025	−.0032	−.0042
10	−.0024	−.0024	−.0024	−.0022	−.0024	−.0030
11	−.0022	−.0023	−.0022	−.0021	−.0020	−.0022
12	−.0019	−.0019	−.0019	−.0019	−.0018	−.0018
13	−.0016	−.0016	−.0016	−.0016	−.0016	−.0015
14	−.0013	−.0013	−.0013	−.0013	−.0013	−.0013
15	−.0009	−.0009	−.0009	−.0009	−.0009	−.0010
16	−.0005	−.0006	−.0006	−.0006	−.0006	−.0006
17	−.0002	−.0002	−.0002	−.0002	−.0002	−.0002

(c) Shear perturbation load about shear panel (0,0)

j	Stringer load, p_{ij}/L, at station—					
	$i=1$	$i=2$	$i=3$	$i=4$	$i=5$	$i=6$
1	−0.0833	0.0022	−0.0020	−0.0005	−0.0003	−0.0002
2	.0158	−.0129	−.0026	−.0015	−.0008	−.0005
3	.0156	.0006	−.0027	−.0015	−.0010	−.0006
4	−.0006	.0006	.0006	−.0006	−.0006	−.0005
5	−.0038	.0020	.0024	.0007	.0001	−.0002
6	−.0007	−.0012	.0013	.0012	.0006	.0003
7	.0007	−.0011	−.0003	.0007	.0007	.0005
8	.0003	−.0001	−.0007	−.0001	.0003	.0004
9	−.0001	.0002	−.0003	−.0004	−.0001	.0002
10	−.0001	.0001	.0001	−.0002	−.0003	−.0001
11	.0000	.0000	.0001	.0000	−.0002	−.0002
12	.0000	.0000	.0000	.0001	.0000	−.0001
13	.0000	.0000	.0000	.0000	0000	0000
14	.0000	.0000	.0000	.0000	.0000	.0000
15	.0000	.0000	.0000	.0000	.0000	.0000
16	.0000	.0000	.0000	.0000	.0000	.0000
17	.0000	.0000	.0000	.0000	.0000	.0000
18	.0000	.0000	.0000	.0000	.0000	.0000

j	Shear flow, q_{ij}, at station—					
	$i=0$	$i=1$	$i=2$	$i=3$	$i=4$	$i=5$
0	0.8771	0.0870	0.0004	0.0010	0.0007	0.0004
1	.0528	−.0336	.0046	.0004	.0005	.0003
2	.0221	−.0048	−.0058	−.0006	−.0002	.0000
3	−.0090	.0101	−.0026	−.0018	−.0007	−.0003
4	−.0075	.0036	.0027	−.0006	−.0007	−.0004
5	.0001	−.0023	.0022	.0011	.0000	−.0002
6	.0015	−.0018	−.0003	.0011	.0006	.0002
7	.0001	.0000	−.0010	.0001	.0006	.0004
8	−.0004	.0004	−.0004	−.0006	.0001	.0003
9	−.0002	.0001	.0001	−.0003	−.0002	.0000
10	.0000	−.0001	.0001	.0000	−.0002	−.0002
11	.0000	−.0001	.0000	.0000	−.0001	−.0002
12	.0000	.0000	.0000	.0000	.0000	.0000
13	.0000	.0000	.0000	.0000	.0000	.0000
14	.0000	.0000	.0000	.0000	.0000	.0000
15	.0000	.0000	.0000	.0000	.0000	.0000
16	.0000	.0000	.0000	.0000	.0000	.0000
17	.0000	.0000	.0000	.0000	.0000	.0000
18	.0000	.0000	.0000	.0000	.0000	.0000

413672—57——83

TABLE 27.—LOAD DISTRIBUTION DUE TO A UNIT PERTURBATION LOAD

[$B=30$; $C=2\times10^6$; $m=30$]

(a) Concentrated perturbation load on stringer $j=0$ at ring $i=0$

j	Stringer load, p_{ij}, at station—						
	$i=0$	$i=1$	$i=2$	$i=3$	$i=4$	$i=5$	$i=6$
0	0.5000	0.1830	0.1197	0.0939	0.0802	0.0717	0.0657
1	0	.1113	.0998	.0856	.0757	.0687	.0635
2	0	.0396	.0618	.0560	.0520	.0501	.0473
3	0	.0093	.0238	.0405	.0455	.0471	.0473
4	0	−.0003	.0086	.0193	.0272	.0321	.0350
5	0	−.0012	−.0001	.0055	.0129	.0179	.0223
6	0	−.0004	−.0018	−.0007	.0028	.0071	.0112
7	0	.0000	−.0011	−.0021	−.0015	.0005	.0033
8	0	.0000	−.0004	−.0015	−.0024	−.0022	−.0011
9	0	−.0001	−.0002	−.0008	−.0019	−.0027	−.0028
10	0	−.0002	−.0003	−.0006	−.0012	−.0021	−.0020
11	0	−.0002	−.0004	−.0006	−.0010	−.0016	−.0024
12	0	−.0003	−.0005	−.0008	−.0010	−.0014	−.0020
13	0	−.0003	−.0006	−.0009	−.0011	−.0014	−.0018
14	0	−.0003	−.0007	−.0010	−.0013	−.0016	−.0019
15	0	−.0004	−.0007	−.0011	−.0014	−.0017	−.0020
16	0	−.0004	−.0007	−.0011	−.0015	−.0018	−.0022
17	0	−.0004	−.0008	−.0011	−.0015	−.0019	−.0023
18	0	−.0004	−.0008	−.0011	−.0015	−.0019	−.0023

j	Shear flow, $q_{ij}L$, at station—					
	$i=0$	$i=1$	$i=2$	$i=3$	$i=4$	$i=5$
0	0.1556	0.0346	0.0129	0.0068	0.0043	0.0030
1	.0453	.0461	.0271	.0167	.0113	.0081
2	.0047	.0239	.0239	.0187	.0142	.0110
3	−.0046	.0044	.0123	.0137	.0120	.0108
4	−.0044	−.0044	.0014	.0058	.0076	.0079
5	−.0031	−.0055	−.0043	−.0009	.0019	.0030
6	−.0037	−.0041	−.0063	−.0044	−.0024	−.0005
7	−.0027	−.0030	−.0043	−.0050	−.0044	−.0033
8	−.0027	−.0026	−.0032	−.0041	−.0045	−.0044
9	−.0026	−.0025	−.0025	−.0031	−.0038	−.0042
10	−.0024	−.0024	−.0023	−.0024	−.0029	−.0034
11	−.0022	−.0022	−.0021	−.0021	−.0023	−.0026
12	−.0019	−.0019	−.0019	−.0018	−.0018	−.0020
13	−.0016	−.0016	−.0016	−.0016	−.0015	−.0015
14	−.0013	−.0013	−.0013	−.0013	−.0013	−.0012
15	−.0009	−.0009	−.0009	−.0009	−.0009	−.0009
16	−.0006	−.0006	−.0006	−.0006	−.0006	−.0006
17	−.0002	−.0002	−.0002	−.0002	−.0002	−.0002

(b) Distributed perturbation load on stringer $j=0$ between rings $i=0$ and $i=1$

j	Stringer load, p_{ij}, at station—					
	$i=1$	$i=2$	$i=3$	$i=4$	$i=5$	$i=6$
0	0.3099	0.1486	0.1053	0.0855	0.0757	0.0685
1	.0753	.1064	.0923	.0803	.0720	.0660
2	.0202	.0532	.0641	.0642	.0616	.0580
3	.0034	.0197	.0354	.0434	.0466	.0473
4	−.0011	.0036	.0141	.0235	.0299	.0337
5	−.0005	−.0012	.0025	.0089	.0138	.0202
6	.0001	−.0012	−.0015	.0009	.0049	.0092
7	.0001	−.0004	−.0017	−.0020	−.0006	.0019
8	.0000	−.0001	−.0009	−.0020	−.0024	−.0018
9	−.0001	−.0001	−.0006	−.0013	−.0023	−.0028
10	−.0001	−.0003	−.0004	−.0009	−.0017	−.0026
11	−.0001	−.0003	−.0006	−.0008	−.0013	−.0020
12	−.0001	−.0004	−.0007	−.0009	−.0012	−.0017
13	−.0002	−.0004	−.0008	−.0010	−.0013	−.0016
14	−.0002	−.0005	−.0008	−.0011	−.0014	−.0017
15	−.0002	−.0005	−.0009	−.0012	−.0016	−.0019
16	−.0002	−.0006	−.0009	−.0013	−.0017	−.0020
17	−.0002	−.0006	−.0009	−.0013	−.0017	−.0021
18	−.0002	−.0006	−.0009	−.0013	−.0017	−.0021

j	Shear flow, $q_{ij}L$, at station—					
	$i=0$	$i=1$	$i=2$	$i=3$	$i=4$	$i=5$
0	0.1901	0.0307	0.0216	0.0094	0.0054	0.0036
1	.0396	.0493	.0357	.0214	.0133	.0096
2	−.0008	.0166	.0247	.0213	.0164	.0135
3	−.0056	−.0007	.0090	.0133	.0133	.0117
4	−.0034	−.0063	−.0015	.0039	.0069	.0079
5	−.0024	−.0046	−.0062	−.0026	.0006	.0039
6	−.0027	−.0032	−.0049	−.0050	−.0034	−.0014
7	−.0029	−.0027	−.0036	−.0048	−.0048	−.0039
8	−.0028	−.0026	−.0028	−.0037	−.0044	−.0045
9	−.0026	−.0026	−.0025	−.0028	−.0035	−.0040
10	−.0024	−.0024	−.0023	−.0023	−.0029	−.0031
11	−.0021	−.0022	−.0022	−.0021	−.0021	−.0024
12	−.0019	−.0019	−.0019	−.0019	−.0018	−.0019
13	−.0016	−.0016	−.0016	−.0016	−.0016	−.0015
14	−.0013	−.0013	−.0013	−.0013	−.0013	−.0012
15	−.0009	−.0009	−.0009	−.0009	−.0009	−.0009
16	−.0006	−.0006	−.0006	−.0006	−.0006	−.0006
17	−.0002	−.0002	−.0002	−.0002	−.0002	−.0002

(c) Shear perturbation load about shear panel (0,0)

j	Stringer load, p_{ij}/L, at station—					
	$i=1$	$i=2$	$i=3$	$i=4$	$i=5$	$i=6$
1	−0.1896	−0.0316	−0.0060	−0.0031	−0.0015	−0.0008
2	.0258	−.0224	−.0125	−.0064	−.0036	−.0023
3	.0303	.0047	−.0047	−.0047	−.0035	−.0024
4	.0054	.0111	.0033	−.0005	−.0016	−.0017
5	−.0053	.0052	.0064	.0026	.0007	−.0002
6	−.0037	−.0007	.0030	.0031	.0020	.0010
7	−.0003	−.0023	.0000	.0017	.0010	.0016
8	.0008	−.0012	−.0012	.0000	.0000	.0012
9	.0004	−.0001	−.0010	−.0008	−.0001	.0005
10	−.0001	.0003	−.0003	−.0007	−.0006	−.0002
11	−.0001	.0001	.0001	−.0003	−.0005	−.0004
12	.0000	.0000	.0001	.0000	−.0003	−.0004
13	.0000	.0000	.0000	.0001	.0000	−.0002
14	.0000	.0000	.0000	.0001	.0000	−.0001
15	.0000	.0000	.0000	.0000	.0000	.0000
16	.0000	.0000	.0000	.0000	.0000	.0001
17	.0000	.0000	.0000	.0000	.0000	.0000
18	.0000	.0000	.0000	.0000	.0000	.0000

j	Shear flow, q_{ij}, at station—					
	$i=0$	$i=1$	$i=2$	$i=3$	$i=4$	$i=5$
0	0.7274	0.0994	0.0211	0.0068	0.0031	0.0017
1	.1064	−.0586	−.0026	.0018	.0015	.0010
2	.0548	−.0103	−.0124	−.0042	−.0013	−.0003
3	−.0058	.0153	−.0030	−.0042	−.0025	−.0014
4	−.0166	.0069	.0048	−.0003	−.0015	−.0013
5	−.0060	−.0009	.0046	.0024	.0004	−.0004
6	.0014	−.0039	.0009	.0023	.0015	.0006
7	.0019	−.0019	−.0014	.0007	.0013	.0010
8	.0003	.0001	−.0013	−.0006	.0004	.0007
9	−.0004	.0006	−.0004	−.0006	−.0004	.0001
10	−.0003	.0002	.0002	−.0004	−.0006	−.0002
11	.0000	−.0001	.0002	.0000	−.0004	−.0004
12	.0000	−.0001	.0001	.0002	−.0001	−.0002
13	.0000	.0000	.0000	.0001	−.0001	−.0001
14	.0000	.0000	.0000	.0000	.0000	.0000
15	.0000	.0000	.0000	.0000	.0000	.0000
16	.0000	.0000	.0000	.0000	.0000	.0000
17	.0000	.0000	.0000	.0000	.0000	.0000
18	.0000	.0000	.0000	.0000	.0000	.0000

TABLE 28.—LOAD DISTRIBUTION DUE TO A UNIT PERTURBATION LOAD

[$B = 100$; $C = 2 \times 10^6$; $m = 30$]

(a) Concentrated perturbation load on stringer $j=0$ at ring $i=0$

j	Stringer load, p_{ij}, at station—						
	$i=0$	$i=1$	$i=2$	$i=3$	$i=4$	$i=5$	$i=6$
0	0.5000	0.2653	0.1691	0.1226	0.0952	0.0839	0.0746
1	0	.0796	.0933	.0893	.0819	.0749	.0690
2	0	.0257	.0456	.0546	.0578	.0580	.0569
3	0	.0096	.0216	.0310	.0373	.0410	.0431
4	0	.0025	.0089	.0158	.0218	.0255	.0300
5	0	.0003	.0026	.0066	.0110	.0152	.0188
6	0	−.0001	.0001	.0017	.0042	.0072	.0101
7	0	−.0001	−.0006	−.0004	.0006	.0022	.0041
8	0	−.0001	−.0006	−.0009	−.0010	−.0006	.0004
9	0	−.0001	−.0004	−.0009	−.0014	−.0016	−.0014
10	0	−.0002	−.0003	−.0008	−.0013	−.0018	−.0021
11	0	−.0002	−.0004	−.0007	−.0012	−.0017	−.0022
12	0	−.0003	−.0005	−.0008	−.0011	−.0016	−.0022
13	0	−.0003	−.0006	−.0009	−.0012	−.0016	−.0021
14	0	−.0003	−.0007	−.0010	−.0013	−.0016	−.0020
15	0	−.0004	−.0007	−.0011	−.0014	−.0017	−.0021
16	0	−.0004	−.0007	−.0011	−.0015	−.0018	−.0022
17	0	−.0004	−.0008	−.0011	−.0015	−.0019	−.0023
18	0	−.0004	−.0008	−.0011	−.0015	−.0019	−.0023

j	Shear flow, $q_{ij}L$, at station—					
	$i=0$	$i=1$	$i=2$	$i=3$	$i=4$	$i=5$
0	0.1158	0.0490	0.0222	0.0122	0.0072	0.0046
1	.0361	.0361	.0273	.0196	.0142	.0106
2	.0093	.0172	.0183	.0164	.0139	.0115
3	−.0001	.0061	.0088	.0102	.0102	.0095
4	−.0027	−.0012	.0019	.0042	.0065	.0061
5	−.0030	−.0035	−.0021	−.0003	.0013	.0034
6	−.0029	−.0037	−.0037	−.0038	−.0016	−.0005
7	−.0028	−.0033	−.0038	−.0038	−.0032	−.0025
8	−.0027	−.0029	−.0034	−.0037	−.0037	−.0034
9	−.0026	−.0026	−.0028	−.0032	−.0035	−.0036
10	−.0024	−.0024	−.0024	−.0027	−.0030	−.0032
11	−.0022	−.0022	−.0021	−.0023	−.0025	−.0027
12	−.0019	−.0019	−.0019	−.0019	−.0020	−.0022
13	−.0016	−.0016	−.0016	−.0016	−.0016	−.0017
14	−.0013	−.0013	−.0013	−.0013	−.0013	−.0013
15	−.0009	−.0009	−.0009	−.0009	−.0009	−.0009
16	−.0006	−.0006	−.0006	−.0006	−.0006	−.0005
17	−.0002	−.0002	−.0002	−.0002	−.0002	−.0002

(b) Distributed perturbation load on stringer $j=0$ between rings $i=0$ and $i=1$

j	Stringer load, p_{ij}, at station—					
	$i=1$	$i=2$	$i=3$	$i=4$	$i=5$	$i=6$
0	0.3683	0.2125	0.1433	0.1093	0.0905	0.0789
1	.0485	.0689	.0918	.0850	.0783	.0718
2	.0137	.0371	.0507	.0565	.0580	.0578
3	.0041	.0157	.0266	.0344	.0393	.0421
4	.0009	.0056	.0134	.0189	.0243	.0283
5	.0000	.0013	.0045	.0088	.0131	.0170
6	.0000	−.0001	.0008	.0029	.0057	.0087
7	.0000	−.0003	−.0005	.0000	.0013	.0031
8	.0000	−.0003	−.0007	−.0010	−.0008	−.0001
9	.0000	−.0002	−.0006	−.0012	−.0015	−.0015
10	.0000	−.0003	−.0006	−.0010	−.0016	−.0020
11	−.0001	−.0003	−.0006	−.0009	−.0015	−.0020
12	−.0001	−.0004	−.0006	−.0010	−.0014	−.0019
13	−.0001	−.0006	−.0007	−.0010	−.0014	−.0018
14	−.0003	−.0005	−.0008	−.0011	−.0015	−.0018
15	−.0002	−.0006	−.0009	−.0012	−.0016	−.0019
16	−.0002	−.0006	−.0009	−.0013	−.0016	−.0020
17	−.0003	−.0006	−.0010	−.0013	−.0017	−.0021
18	−.0003	−.0006	−.0010	−.0013	−.0017	−.0021

j	Shear flow, $q_{ij}L$, at station—					
	$i=0$	$i=1$	$i=2$	$i=3$	$i=4$	$i=5$
0	0.1317	0.0779	0.0346	0.0170	0.0094	0.0058
1	.0346	.0375	.0317	.0233	.0167	.0122
2	.0073	.0141	.0181	.0175	.0152	.0127
3	−.0010	.0025	.0072	.0096	.0103	.0099
4	−.0027	−.0022	.0004	.0031	.0049	.0058
5	−.0028	−.0035	−.0029	−.0012	.0006	.0019
6	−.0027	−.0033	−.0038	−.0033	−.0022	−.0011
7	−.0027	−.0030	−.0036	−.0038	−.0035	−.0029
8	−.0027	−.0027	−.0031	−.0036	−.0037	−.0035
9	−.0026	−.0026	−.0027	−.0030	−.0034	−.0036
10	−.0024	−.0024	−.0024	−.0026	−.0029	−.0031
11	−.0022	−.0022	−.0022	−.0022	−.0024	−.0026
12	−.0019	−.0019	−.0019	−.0019	−.0019	−.0021
13	−.0016	−.0016	−.0016	−.0016	−.0016	−.0016
14	−.0012	−.0013	−.0013	−.0013	−.0013	−.0013
15	−.0009	−.0009	−.0009	−.0009	−.0009	−.0009
16	−.0006	−.0006	−.0006	−.0006	−.0006	−.0006
17	−.0002	−.0002	−.0002	−.0002	−.0002	−.0002

(c) Shear perturbation load about shear panel (0,0)

j	Stringer load, p_{ij}/L, at station—					
	$i=1$	$i=2$	$i=3$	$i=4$	$i=5$	$i=6$
1	−0.2893	−0.1141	−0.0466	−0.0206	−0.0100	−0.0054
2	.0265	−.0266	−.0259	−.0197	−.0135	−.0091
3	.0381	.0099	−.0038	−.0075	−.0078	−.0068
4	.0161	.0156	.0070	.0014	−.0015	−.0027
5	−.0004	.0099	.0087	.0054	.0026	.0008
6	−.0050	.0025	.0057	.0056	.0041	.0027
7	−.0032	−.0017	.0019	.0034	.0036	.0031
8	−.0006	−.0024	−.0007	.0011	.0021	.0024
9	.0006	−.0015	−.0016	−.0006	.0005	.0012
10	.0006	−.0004	−.0013	−.0011	−.0005	.0001
11	.0001	.0001	−.0006	−.0010	−.0009	−.0006
12	−.0001	.0002	−.0001	−.0006	−.0008	−.0007
13	−.0001	.0001	.0001	−.0002	−.0005	−.0006
14	.0000	.0000	.0001	.0000	−.0002	−.0004
15	.0000	.0000	.0000	.0001	.0000	−.0001
16	.0000	.0000	.0000	.0001	.0001	.0000
17	.0000	.0000	.0000	.0000	.0001	.0000
18	.0000	.0000	.0000	.0000	.0000	.0000

j	Shear flow, q_{ij}, at station—					
	$i=0$	$i=1$	$i=2$	$i=3$	$i=4$	$i=5$
0	0.5660	0.1096	0.0506	0.0235	0.0118	0.0066
1	.1447	−.0660	−.0169	−.0025	.0012	.0019
2	.0017	−.0130	−.0168	−.0097	−.0050	−.0024
3	.0155	.0147	−.0032	−.0056	−.0048	−.0034
4	−.0168	.0151	.0054	.0000	−.0019	−.0022
5	−.0158	.0048	.0066	.0033	.0009	−.0003
6	−.0067	−.0037	.0034	.0035	.0022	.0011
7	.0007	−.0043	−.0002	.0020	.0021	.0016
8	.0020	−.0025	−.0019	.0001	.0010	.0012
9	.0010	−.0005	−.0017	−.0009	.0000	.0006
10	.0000	.0004	−.0009	−.0010	−.0006	−.0001
11	−.0003	.0004	−.0001	−.0006	−.0007	−.0006
12	−.0002	.0001	.0002	−.0002	−.0006	−.0006
13	.0000	.0000	.0002	.0001	−.0002	−.0004
14	.0001	.0000	.0001	.0002	.0000	−.0003
15	.0001	.0000	.0000	.0001	.0001	.0000
16	.0000	.0000	.0000	.0000	.0001	.0000
17	.0000	.0000	.0000	.0000	.0000	.0001
18	.0000	.0000	.0000	.0000	.0000	.0001

TABLE 20.—LOAD DISTRIBUTION DUE TO A UNIT PERTURBATION LOAD

[$B = 300$; $C = 2 \times 10^4$; $m = 36$]

(a) Concentrated perturbation load on stringer $j=0$ at ring $i=0$

j	Stringer load, p_{ij}, at station—						
	$i=0$	$i=1$	$i=2$	$i=3$	$i=4$	$i=5$	$i=6$
0	0.5000	0.3397	0.2424	0.1822	0.1438	0.1184	0.1012
1	0	.0540	.0708	.0840	.0942	.0814	.0774
2	0	.0103	.0298	.0395	.0459	.0497	.0517
3	0	.0070	.0145	.0211	.0260	.0300	.0342
4	0	.0032	.0074	.0118	.0168	.0194	.0226
5	0	.0014	.0036	.0063	.0091	.0119	.0145
6	0	.0006	.0016	.0031	.0040	.0068	.0037
7	0	.0002	.0005	.0012	.0022	.0033	.0047
8	0	.0000	.0000	.0002	.0006	.0011	.0019
9	0	−.0001	−.0002	−.0003	−.0003	−.0002	.0001
10	0	−.0001	−.0003	−.0006	−.0008	−.0009	−.0009
11	0	−.0002	−.0004	−.0007	−.0010	−.0013	−.0015
12	0	−.0003	−.0005	−.0008	−.0012	−.0015	−.0019
13	0	−.0003	−.0006	−.0009	−.0013	−.0016	−.0020
14	0	−.0003	−.0007	−.0010	−.0013	−.0017	−.0021
15	0	−.0004	−.0007	−.0011	−.0014	−.0018	−.0022
16	0	−.0004	−.0007	−.0011	−.0015	−.0019	−.0023
17	0	−.0004	−.0008	−.0011	−.0015	−.0019	−.0023
18	0	−.0004	−.0008	−.0012	−.0015	−.0019	−.0023

j	Shear flow, $q_{ij}L$, at station—					
	$i=0$	$i=1$	$i=2$	$i=3$	$i=4$	$i=5$
0	0.0802	0.0450	0.0301	0.0192	0.0127	0.0080
1	.0302	.0260	.0227	.0190	.0155	.0126
2	.0099	.0125	.0131	.0126	.0117	.0106
3	.0028	.0050	.0064	.0071	.0074	.0073
4	−.0004	.0008	.0021	.0031	.0037	.0042
5	−.0018	−.0014	−.0006	.0002	.0010	.0016
6	−.0023	−.0024	−.0021	−.0015	−.0010	−.0004
7	−.0025	−.0028	−.0028	−.0025	−.0021	−.0017
8	−.0026	−.0027	−.0029	−.0029	−.0028	−.0025
9	−.0025	−.0026	−.0028	−.0029	−.0029	−.0028
10	−.0024	−.0024	−.0026	−.0027	−.0028	−.0026
11	−.0022	−.0021	−.0022	−.0024	−.0025	−.0026
12	−.0019	−.0019	−.0019	−.0020	−.0021	−.0022
13	−.0016	−.0016	−.0016	−.0016	−.0017	−.0018
14	−.0013	−.0013	−.0013	−.0013	−.0013	−.0014
15	−.0010	−.0009	−.0010	−.0009	−.0010	−.0010
16	−.0006	−.0006	−.0006	−.0006	−.0006	−.0006
17	−.0002	−.0002	−.0002	−.0002	−.0002	−.0002

(b) Distributed perturbation load on stringer $j=0$ between rings $i=0$ and $i=1$

j	Stringer load, p_{ij}, at station—					
	$i=1$	$i=2$	$i=3$	$i=4$	$i=5$	$i=6$
0	0.4132	0.2872	0.2100	0.1616	0.1303	0.1093
1	.0305	.0670	.0811	.0845	.0830	.0794
2	.0083	.0234	.0350	.0429	.0479	.0503
3	.0034	.0108	.0179	.0240	.0288	.0328
4	.0015	.0063	.0096	.0136	.0177	.0211
5	.0006	.0024	.0050	.0077	.0105	.0132
6	.0003	.0010	.0023	.0039	.0058	.0073
7	.0001	.0003	.0008	.0016	.0027	.0040
8	.0000	.0000	.0001	.0003	.0008	.0015
9	.0000	−.0001	−.0003	−.0003	−.0003	−.0000
10	−.0001	−.0003	−.0006	−.0007	−.0009	−.0000
11	−.0001	−.0003	−.0006	−.0009	−.0012	−.0014
12	−.0001	−.0003	−.0007	−.0010	−.0013	−.0017
13	−.0002	−.0004	−.0007	−.0011	−.0014	−.0018
14	−.0002	−.0006	−.0008	−.0012	−.0015	−.0019
15	−.0002	−.0006	−.0009	−.0012	−.0016	−.0020
16	−.0002	−.0006	−.0009	−.0013	−.0017	−.0021
17	−.0002	−.0006	−.0010	−.0013	−.0017	−.0021
18	−.0002	−.0006	−.0010	−.0013	−.0017	−.0021

j	Shear flow, $q_{ij}L$, at station—					
	$i=0$	$i=1$	$i=2$	$i=3$	$i=4$	$i=5$
0	0.0326	0.0630	0.0386	0.0242	0.0157	0.0105
1	.0258	.0265	.0244	.0208	.0172	.0140
2	.0092	.0114	.0129	.0129	.0122	.0111
3	.0024	.0040	.0058	.0063	.0073	.0073
4	−.0005	.0002	.0015	.0028	.0034	.0039
5	−.0017	−.0017	−.0010	−.0002	.0000	.0013
6	−.0022	−.0024	−.0023	−.0018	−.0012	−.0007
7	−.0025	−.0025	−.0028	−.0027	−.0023	−.0020
8	−.0026	−.0026	−.0028	−.0029	−.0028	−.0026
9	−.0025	−.0025	−.0027	−.0028	−.0029	−.0029
10	−.0024	−.0024	−.0025	−.0026	−.0027	−.0028
11	−.0022	−.0022	−.0022	−.0023	−.0024	−.0025
12	−.0019	−.0019	−.0019	−.0020	−.0021	−.0021
13	−.0016	−.0016	−.0016	−.0016	−.0017	−.0017
14	−.0013	−.0013	−.0013	−.0013	−.0013	−.0013
15	−.0010	−.0009	−.0010	−.0009	−.0010	−.0009
16	−.0006	−.0006	−.0006	−.0006	−.0006	−.0006
17	−.0002	−.0002	−.0002	−.0002	−.0002	−.0002

(c) Shear perturbation load about shear panel (0,0)

j	Stringer load, p_{ij}/L, at station—					
	$i=1$	$i=2$	$i=3$	$i=4$	$i=5$	$i=6$
1	−0.3630	−0.2133	−0.1250	−0.0744	−0.0453	−0.0283
2	.0214	−.0251	−.0349	−.0337	−.0291	−.0238
3	.0364	.0114	−.0010	−.0071	−.0098	−.0107
4	.0229	.0170	.0091	.0037	.0002	−.0021
5	.0076	.0133	.0106	.0074	.0046	.0025
6	−.0014	.0070	.0083	.0074	.0059	.0044
7	−.0039	.0016	.0047	.0055	.0053	.0046
8	−.0029	−.0014	.0014	.0030	.0037	.0038
9	−.0011	−.0022	−.0007	.0009	.0019	.0025
10	.0001	−.0017	−.0015	−.0006	.0004	.0011
11	.0004	−.0009	−.0015	−.0012	−.0006	.0000
12	.0003	−.0002	−.0010	−.0012	−.0010	−.0006
13	.0001	.0001	−.0005	−.0009	−.0010	−.0009
14	.0000	.0001	−.0001	−.0006	−.0010	−.0009
15	−.0001	.0001	.0001	−.0002	−.0006	−.0007
16	.0000	.0000	.0001	.0000	−.0002	−.0004
17	.0000	.0000	.0001	.0000	−.0001	−.0002
18	.0000	.0000	.0000	.0000	.0000	−.0001

j	Shear flow, q_{ij}, at station—					
	$i=0$	$i=1$	$i=2$	$i=3$	$i=4$	$i=5$
0	0.4336	0.0890	0.0620	0.0400	0.0257	0.0168
1	.1597	−.0607	−.0257	−.0106	−.0035	−.0002
2	.1168	−.0142	−.0189	−.0117	−.0081	−.0064
3	.0440	.0108	−.0036	−.0056	−.0064	−.0045
4	−.0019	.0167	.0044	−.0002	−.0019	−.0024
5	−.0171	.0110	.0070	.0031	.0009	−.0003
6	−.0143	.0027	.0067	.0040	.0024	.0012
7	−.0065	−.0028	.0026	.0032	.0026	.0018
8	−.0003	−.0043	−.0002	.0016	.0019	.0018
9	.0014	−.0032	−.0018	.0001	.0009	.0012
10	.0013	−.0015	−.0020	−.0009	.0000	.0005
11	.0005	−.0003	−.0014	−.0012	−.0006	−.0001
12	−.0001	.0004	−.0006	−.0010	−.0008	−.0005
13	−.0003	.0004	.0000	−.0006	−.0007	−.0006
14	−.0002	.0002	.0002	−.0002	−.0005	−.0005
15	−.0001	.0000	.0002	.0001	−.0002	−.0003
16	.0000	.0000	.0001	.0002	.0000	−.0001
17	.0000	.0000	.0000	.0002	.0002	.0000
18	.0000	.0000	.0000	.0002	.0002	.0001

TABLE 30.—LOAD DISTRIBUTION DUE TO A UNIT PERTURBATION LOAD

[B=1,000; C=2 × 10⁴; m=36]

(a) Concentrated perturbation load on stringer j=0 at ring i=0

	Stringer load, p_{ij}, at station—						
	i=0	i=1	i=2	i=3	i=4	i=5	i=6
0	0.5000	0.4011	0.3269	0.2692	0.2256	0.1919	0.1656
1	0	.0331	.0542	.0672	.0747	.0780	.0800
2	0	.0089	.0170	.0242	.0302	.0351	.0391
3	0	.0042	.0083	.0123	.0160	.0192	.0223
4	0	.0023	.0048	.0073	.0098	.0121	.0143
5	0	.0014	.0030	.0046	.0063	.0079	.0096
6	0	.0008	.0018	.0029	.0041	.0053	.0064
7	0	.0005	.0011	.0018	.0025	.0033	.0042
8	0	.0003	.0006	.0010	.0014	.0019	.0025
9	0	.0001	.0002	.0004	.0006	.0009	.0012
10	0	.0000	.0000	.0000	.0000	.0001	.0003
11	0	−.0001	−.0002	−.0003	−.0004	−.0005	−.0006
12	0	−.0002	−.0004	−.0006	−.0008	−.0010	−.0011
13	0	−.0002	−.0005	−.0007	−.0010	−.0012	−.0015
14	0	−.0003	−.0006	−.0009	−.0012	−.0015	−.0018
15	0	−.0003	−.0007	−.0010	−.0013	−.0017	−.0021
16	0	−.0004	−.0007	−.0011	−.0014	−.0018	−.0022
17	0	−.0004	−.0007	−.0011	−.0015	−.0018	−.0022
18	0	−.0004	−.0007	−.0011	−.0015	−.0019	−.0022

j	Shear flow, $q_{ij}L$, at station—					
	i=0	i=1	i=2	i=3	i=4	i=5
0	0.0495	0.0374	0.0285	0.0218	0.0168	0.0131
1	.0164	.0163	.0155	.0143	.0130	.0117
2	.0075	.0082	.0083	.0083	.0080	.0078
3	.0034	.0040	.0044	.0046	.0047	.0047
4	.0010	.0015	.0019	.0022	.0024	.0026
5	−.0004	−.0001	.0002	.0005	.0006	.0008
6	−.0012	−.0011	−.0009	−.0007	−.0004	−.0002
7	−.0017	−.0017	−.0016	−.0014	−.0012	−.0011
8	−.0019	−.0020	−.0020	−.0019	−.0018	−.0016
9	−.0020	−.0021	−.0021	−.0021	−.0020	−.0019
10	−.0020	−.0021	−.0021	−.0021	−.0021	−.0021
11	−.0019	−.0020	−.0020	−.0020	−.0021	−.0020
12	−.0018	−.0018	−.0018	−.0018	−.0019	−.0019
13	−.0015	−.0015	−.0015	−.0016	−.0016	−.0017
14	−.0012	−.0012	−.0012	−.0013	−.0013	−.0014
15	−.0009	−.0009	−.0009	−.0009	−.0010	−.0010
16	−.0006	−.0006	−.0006	−.0006	−.0006	−.0006
17	−.0002	−.0002	−.0002	−.0002	−.0002	−.0002

(b) Distributed perturbation load on stringer j=0 between rings i=0 and i=1

j	Stringer load, p_{ij}, at station—					
	i=1	i=2	i=3	i=4	i=5	i=6
0	0.4482	0.3619	0.2964	0.2464	0.2080	0.1782
1	.0177	.0444	.0612	.0713	.0769	.0795
2	.0045	.0130	.0207	.0273	.0327	.0372
3	.0021	.0063	.0103	.0141	.0177	.0208
4	.0011	.0036	.0061	.0086	.0109	.0132
5	.0007	.0023	.0038	.0055	.0071	.0088
6	.0004	.0013	.0024	.0035	.0047	.0060
7	.0002	.0008	.0014	.0021	.0029	.0038
8	.0001	.0004	.0008	.0012	.0017	.0022
9	.0001	.0002	.0003	.0005	.0007	.0010
10	.0000	.0000	.0000	.0000	.0001	.0002
11	.0000	−.0002	−.0003	−.0004	−.0006	−.0006
12	−.0001	−.0003	−.0005	−.0007	−.0008	−.0010
13	−.0001	−.0004	−.0006	−.0009	−.0012	−.0014
14	−.0001	−.0004	−.0007	−.0010	−.0013	−.0016
15	−.0002	−.0005	−.0008	−.0012	−.0015	−.0018
16	−.0002	−.0005	−.0009	−.0012	−.0016	−.0020
17	−.0002	−.0006	−.0009	−.0013	−.0016	−.0021
18	−.0002	−.0006	−.0009	−.0013	−.0018	−.0021

j	Shear flow, $q_{ij}L$, at station—					
	i=0	i=1	i=2	i=3	i=4	i=5
0	0.0518	0.0432	0.0337	0.0250	0.0192	0.0149
1	.0163	.0165	.0159	.0149	.0136	.0124
2	.0074	.0079	.0083	.0083	.0082	.0079
3	.0032	.0037	.0042	.0045	.0046	.0047
4	.0010	.0013	.0017	.0020	.0023	.0025
5	−.0004	−.0002	.0001	.0004	.0006	.0008
6	−.0012	−.0012	−.0010	−.0008	−.0006	−.0003
7	−.0016	−.0017	−.0016	−.0015	−.0013	−.0012
8	−.0019	−.0020	−.0020	−.0019	−.0018	−.0017
9	−.0020	−.0021	−.0021	−.0021	−.0020	−.0020
10	−.0020	−.0020	−.0021	−.0021	−.0022	−.0021
11	−.0019	−.0019	−.0020	−.0020	−.0020	−.0021
12	−.0018	−.0018	−.0018	−.0018	−.0019	−.0019
13	−.0015	−.0015	−.0015	−.0016	−.0016	−.0016
14	−.0012	−.0012	−.0012	−.0013	−.0013	−.0013
15	−.0009	−.0009	−.0009	−.0009	−.0010	−.0010
16	−.0005	−.0006	−.0006	−.0006	−.0005	−.0006
17	−.0002	−.0002	−.0002	−.0002	−.0002	−.0002

(c) Shear perturbation load about shear panel (0,0)

j	Stringer load, p_{ij}/L, at station—					
	i=1	i=2	i=3	i=4	i=5	i=6
1	−0.4189	−0.3132	−0.2326	−0.1732	−0.1296	−0.0976
2	.0149	−.0196	−.0331	−.0386	−.0400	−.0387
3	.0290	.0097	.0007	−.0047	−.0082	−.0106
4	.0237	.0147	.0086	.0046	.0016	−.0004
5	.0139	.0137	.0103	.0075	.0054	.0037
6	.0061	.0101	.0094	.0079	.0065	.0052
7	−.0004	.0056	.0071	.0069	.0062	.0055
8	−.0036	.0021	.0044	.0051	.0052	.0049
9	−.0026	−.0003	.0020	.0032	.0037	.0039
10	−.0016	−.0015	.0002	.0015	.0022	.0027
11	−.0008	−.0017	−.0009	.0001	.0010	.0015
12	.0000	−.0013	−.0012	−.0007	−.0001	.0005
13	.0003	−.0008	−.0012	−.0011	−.0007	−.0003
14	.0002	−.0003	−.0010	−.0011	−.0010	−.0007
15	.0001	.0000	−.0006	−.0010	−.0010	−.0009
16	.0000	.0001	−.0003	−.0007	−.0008	−.0008
17	.0000	.0001	−.0001	−.0004	−.0006	−.0006
18	.0000	.0000	0000	−.0001	−.0001	−.0002

j	Shear flow, q_{ij}, at station—					
	i=0	i=1	i=2	i=3	i=4	i=5
0	0.3209	0.0572	0.0544	0.0430	0.0342	0.0277
1	.1580	−.0485	−.0263	−.0157	−.0094	−.0063
2	.1288	−.0140	−.0128	−.0102	−.0081	−.0066
3	.0709	.0053	−.0039	−.0048	−.0046	−.0042
4	.0234	.0144	.0023	−.0008	−.0017	−.0021
5	−.0044	.0145	.0057	.0020	.0004	−.0004
6	−.0145	.0095	.0064	.0035	.0018	.0009
7	−.0187	.0032	.0062	.0037	.0024	.0016
8	−.0085	−.0016	.0028	.0030	.0024	.0019
9	−.0034	−.0038	.0005	.0018	.0019	.0017
10	−.0001	−.0029	−.0012	.0008	.0011	.0013
11	.0011	−.0028	−.0019	−.0005	.0003	.0008
12	.0011	−.0015	−.0020	−.0011	−.0002	.0002
13	.0006	−.0004	−.0015	−.0012	−.0006	−.0002
14	.0001	.0002	−.0009	−.0011	−.0008	−.0006
15	−.0001	.0003	−.0004	−.0007	−.0007	−.0006
16	−.0002	.0002	.0001	−.0003	−.0006	−.0006
17	−.0001	.0002	.0003	.0001	−.0004	−.0007
18	−.0001	.0001	.0004	.0000	−.0004	−.0007