REPORT No. 672

FREE-SPINNING WIND-TUNNEL TESTS OF A LOW-WING MONOPLANE WITH SYSTEMATIC CHANGES IN WINGS AND TAILS

IV. EFFECT OF CENTER-OF-GRAVITY LOCATION

By Oscar Seidman and A. I. Neihouse

SUMMARY

Eight wings and three tails, covering a wide range of aerodynamic characteristics, were independently ballasted so as to be interchangeable with no change in mass distribution. For each of the 24 resulting wing-tail combinations, observations were made of the steady spin for four control settings and of recoveries for five control manipulations. The results are presented in the form of charts comparing the spin characteristics. The tests are part of a general investigation being made in the N. A. C. A. free-spinning tunnel to determine the effects of systematic changes in wing and tail arrangement upon the steady-spin and the recovery characteristics of a conventional low-wing monoplane for various load distributions.

The present tests are a continuation of the investigation, the entire series of tests performed for the basic loading being repeated with the center of gravity 10 percent forward and 10 percent back of the normal location at 25 percent of the mean chord. The results are compared with those for the basic loading condition.

For all tail and wing arrangements, there was a definite effect of center-of-gravity location, the forward location giving steeper spins and faster recoveries and the rearward location giving flatter spins and slower recoveries than the basic center-of-gravity location. The spin coefficient $\Omega b/2V$ increased as the center of gravity was moved forward and decreased as the center of gravity was moved back. In general, there was a tendency for the rate of descent to increase and for the sideslip to become more outward as the center of gravity was moved forward. The wing of N. A. C. A. 6718 section, however, generally gave more inward sideslip for the forward center-of-gravity location than for the rearward location. The importance of center-of-gravity location, wing arrangement, and control manipulations increased as the effectiveness of the tail unit decreased.

INTRODUCTION

The N. A. C. A. has undertaken a systematic investigation in the free-spinning wind tunnel to determine the effect of independent variations in dimensional and mass characteristics on the spin characteristics of airplanes (reference 1).

The results of tests of each of eight wings and three tails on a low-wing monoplane model for a basic loading condition, representative of an average of values for 21 American airplanes for which the moments of inertia were available, have been reported in reference 1. Results with weight distributed chiefly along the fuselage and with weight distributed chiefly along the wings are presented in references 2 and 3, respectively. The present paper deals with the effect of center-of-gravity position. In addition to the tests for the basic loading condition with the center of gravity at 25 percent of the mean wing chord, tests were made with the center of gravity at 15 and at 35 percent of the mean wing chord. The range of center-of-gravity locations thus covered is not likely to be greatly exceeded.

The major wing variables include tip shape, airfoil section, plan form, and flaps. The Army standard tapered wing, also included in the test program, combines changes in plan form and thickness. The three tail arrangements range from a combination utilizing full-length rudder and raised stabilizer on a deep fuselage, designed to be extremely efficient in providing yawing moment for recovery, to a more nearly conventional type with the rudder completely above a shallow fuselage and almost completely shielded by the horizontal surfaces.

APPARATUS AND METHODS

A general description of model construction and testing technique in the N. A. C. A. free-spinning tunnel is given in reference 4. The models are constructed of balsa, reinforced with spruce and bamboo. In order to reduce the weight, the fuselage and the wings are hollowed out, the external contours being maintained by silk tissue paper on reinforcing ribs. The desired load distribution is attained by suitable location of lead weights.

Figures 1 to 5 show special structural features of the model used in the present investigation. The wing and the tail units are independently removable and interchangeable to permit testing any combination. The exchange of units can be made without any change in mass distribution. The mass distribution can also be changed without changing the wing or the tail arrangement. A clockwork delay-action mechanism is installed to actuate the controls for recovery.

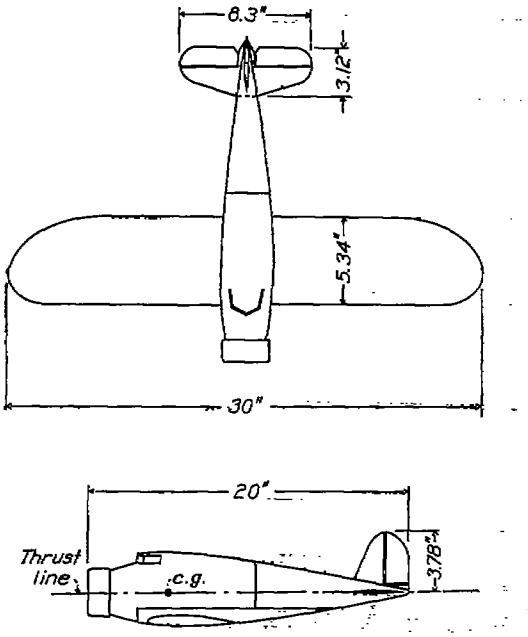

FIGURE 1.—Low-wing monoplane model with detachable tail and wing.

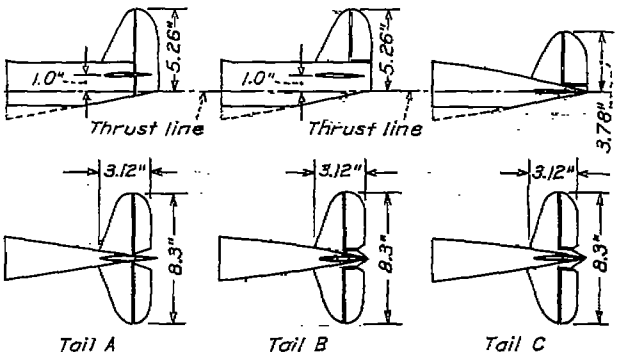

FIGURE 3.—Tails used on low-wing monoplane.

The model was not scaled from any particular airplane but was designed to be a representative low-wing cabin monoplane with a cowled radial engine and with landing gear retracted. Dimensional characteristics of the model and of the eight wings and the three tails are given on the line drawings of figures 1, 2, and 3. For convenience in making comparisons, the model may be considered a 1/15-scale model of either a fighter or a four-place cabin airplane, tested at an altitude of 6,000 feet. The full-scale characteristics for the present loadings and for tail C would be:

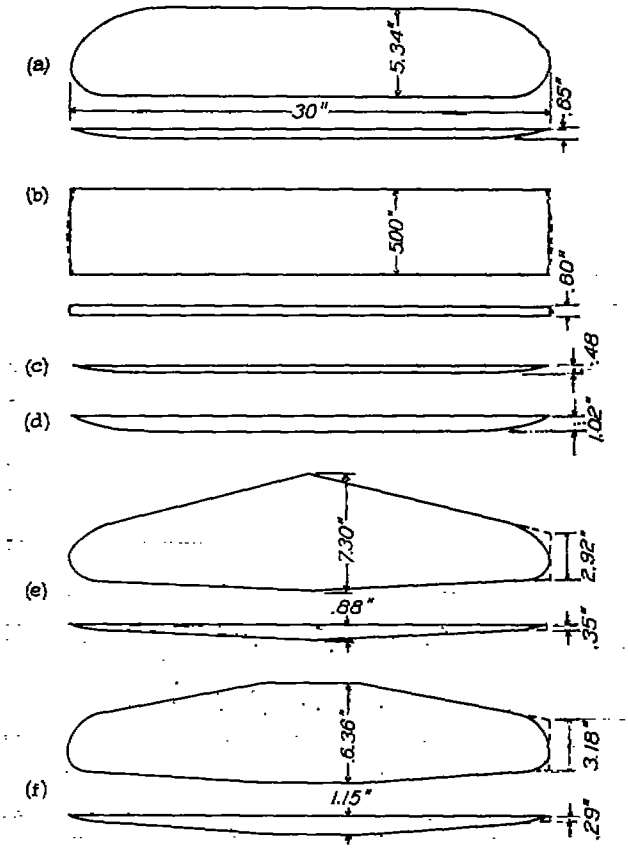

(a) Wing 1—23012 rectangular with Army tips; wing 2—23012 with 20 percent full span split flaps at 60°.
(b) Wing 3—23012 rectangular with rectangular tips; wing 4—23012 rectangular with faired tips.
(c) Wing 5—0009 rectangular with Army tips (plan same as wing 1).
(d) Wing 6—6718 rectangular with Army tips (plan same as wing 1).
(e) Wing 7—23012 5:2 taper with Army tips.
(f) Wing 8—23018-09 standard Army wing. (2:1 taper, square center, Army tips.)

FIGURE 2.—Wings used on low-wing monoplane. N. A. C. A. wing sections.

Weight (W)	4,720 lb.
Mean wing chord ($c=S/b$)	75 in.
Span (b)	37.5 ft.
Wing area (S)	234.4 sq. ft.
Aspect ratio	6
Distance from quarter-chord point to elevator hinge	16.6 ft.
Distance from quarter-chord point to rudder hinge	16.9 ft.
Fin area	6.8 sq. ft.
Rudder area	6.9 sq. ft.
Stabilizer area	19.8 sq. ft.
Elevator area	12.9 sq. ft.
Control travel	Rudder: ±30° Elevator: 30° up 20° down

Principal moments of inertia for the three center-of-gravity locations:

$A=mk_X^2$	2,760 slug-feet^2
$B=mk_Y^2$	3,970 slug-feet^2
$C=mk_Z^2$	6,150 slug-feet^2

where A, B, and C are moments of inertia about and k_X, k_Y, and k_Z are the radii of gyration about the X, Y, and Z axes, respectively.

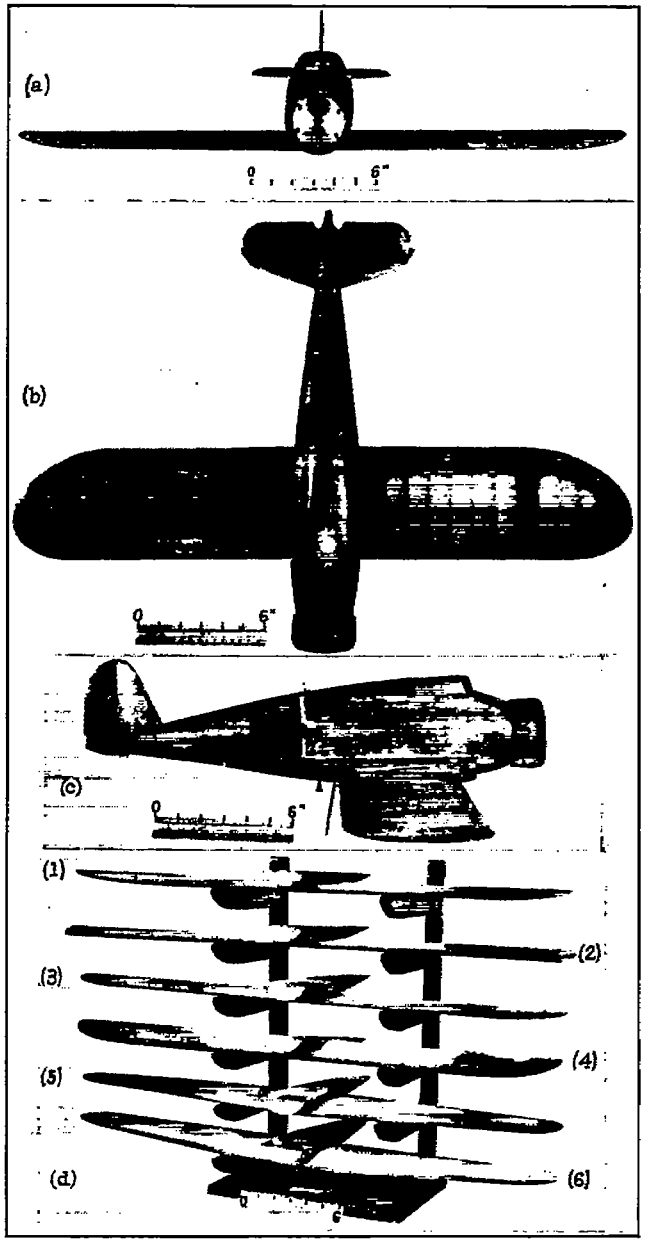

(a) Front view.
(b) Plan view.
(c) Side view, showing detachable parts.
(d) Low-wing monoplane wings: (1) Wings 1 and 2; (2) wings 3 and 4; (3) wing 5; (4) wing 6; (5) wing 7; (6) wing 8.

FIGURE 4.—Low-wing monoplane model.

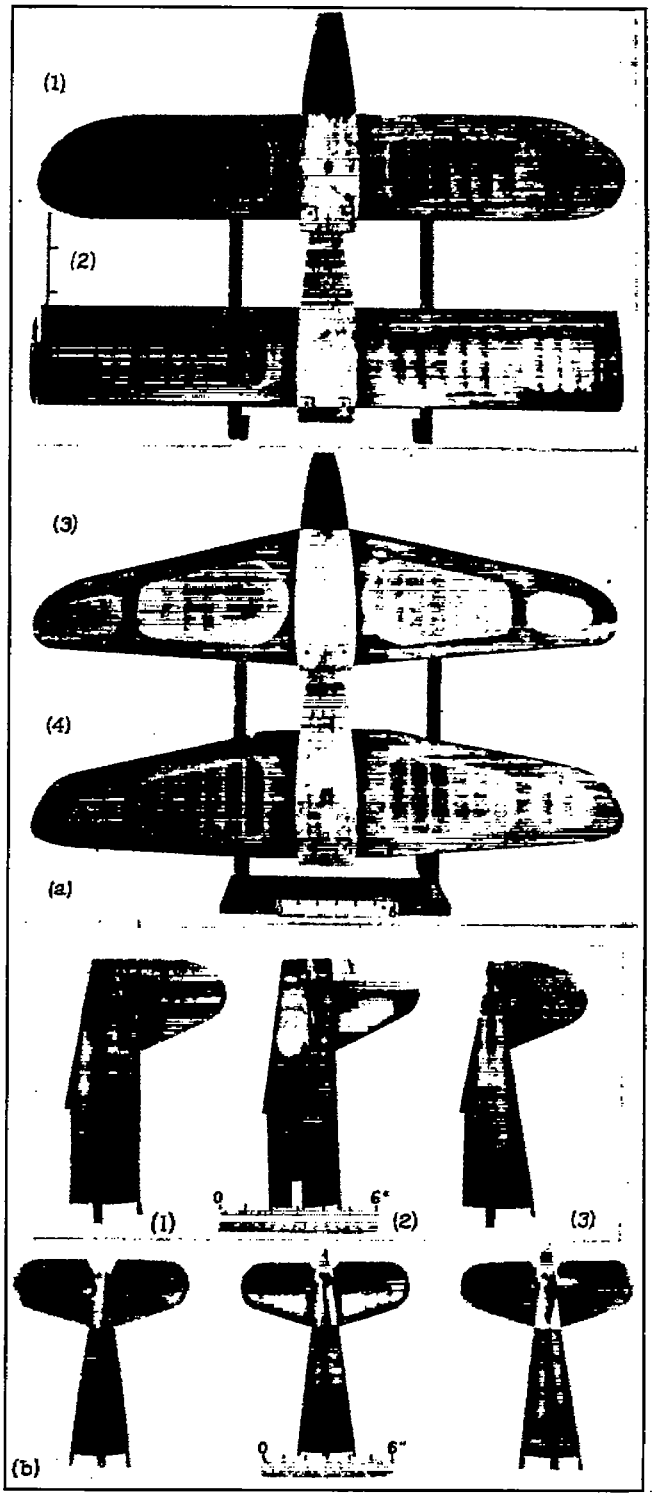

(a) (1) Rectangular wing with Army tips; (2) rectangular wing with interchangeable rectangular and faired tips; (3) 5:2 tapered wing with Army tips; (4) 2:1 Army standard tapered wing with square center.

(b) (1) Tail A, deep fuselage and long rudder; (2) tail B, deep fuselage and short rudder; (3) tail C, shallow fuselage and short rudder.

FIGURE 5.—Interchangeable wings and tails of low-wing monoplane model.

The nondimensional mass-distribution parameters for the different center-of-gravity locations are:

	Center-of-gravity location		
	Forward	Normal	Rearward
Relative density of airplane to air, $\mu=\frac{W}{g\rho Sb}$	7	7	7
Pitching-moment inertia parameter, $\frac{Wb^2}{g(C-A)}$	61	61	61
Rolling-moment and yawing-moment inertia parameter, $\frac{C-B}{C-A}$	0.64	0.64	0.64
$\frac{b}{k_X}$	8.7	8.7	8.7
$\frac{x}{c}$	0.15	0.25	0.35
$\frac{z}{c}$	0	0	0

where

ρ is the air density.

b, span of wing.

S, area of wing.

x, distance of the center of gravity back of the leading edge of the mean chord.

z, distance of the center of gravity below the thrust line.

c, mean wing chord.

Figures 1 and 4 show the model with the basic wing (wing 1) and tail C installed. This wing is of N. A. C. A. 23012 section with rectangular plan form and Army tips. (The tip contour is derived as described in reference 5.) In common with the other wings, it has an area of 150 square inches, a span of 30 inches, and no dihedral, twist, or sweepback.

The seven remaining wings (figs. 2 and 5) have varied dimensional characteristics as follows:

Wing 2: N. A. C. A. 23012 section, rectangular with Army tips, 20-percent-chord split flaps deflected 60°.

Wing 3: N. A. C. A. 23012 section, rectangular with rectangular tips.

Wing 4: N. A. C. A. 23012 section, rectangular with faired tips.

Wing 5: N. A. C. A. 0009 section, rectangular with Army tips.

Wing 6: N. A. C. A. 6718 section, rectangular with Army tips.

Wing 7: N. A. C. A. 23012 section, 5:2 taper with Army tips.

Wing 8: N. A. C. A. 23018–09 section, Army standard plan form (square center section, 2:1 taper in both plan form and thickness, and Army tips).

Each wing is mounted on the model at an angle of incidence equal to the angle of zero lift for the particular section. The stabilizer is set at zero incidence for each tail. There is no fin offset.

The three tails designated A, B, and C are shown in figures 3 and 5. Tail C, representing a conventional shallow fuselage with rudder completely above the tail cone, has the following dimensional characteristics:

Vertical tail area: 6 percent wing area (3 percent rudder and 3 percent fin).

Fuselage side area, back of leading edge of stabilizer: 2 percent wing area.

Vertical tail length (from wing quarter-chord point to rudder hinge axis): 45 percent wing span (2.70c).

Horizontal tail area: 14 percent wing area (5.5 percent elevator and 8.5 percent stabilizer).

Horizontal tail length (from wing quarter-chord point to elevator hinge axis): 44 percent wing span (2.64c).

Tail B was derived from tail C by increasing the fuselage depth, raising the stabilizer and the elevators, and installing approximately the original fin and rudder atop the deepened fuselage. For tail B, the vertical areas are:

Vertical tail area: 6 percent wing area.

Fuselage side area back of leading edge of stabilizer: 5.5 percent wing area.

Tail A is similar to tail B except for full-length rudder construction and slightly increased elevator cut-out. For tail A, the vertical areas are:

Vertical tail area: 8 percent wing area (5 percent rudder and 3 percent fin).

Fuselage side area back of leading edge of stabilizer: 3.4 percent wing area.

TESTS AND RESULTS

For each wing and tail combination with each center-of-gravity location, spin tests were made for four control settings:

(a) Rudder 30° with the spin; elevators neutral.

(b) Rudder 30° with the spin; elevators 20° down.

(c) Rudder 30° with the spin; elevators 30° up.

(d) Rudder neutral; elevators neutral.

Recovery from (a) and (b) was attempted by reversal of the rudder, from (c) by complete reversal of both controls and also by neutralizing both controls, and from (d) by moving the rudder full against the spin and the elevators full down.

The angle of attack α, the angle of sideslip β, the rate of descent V, the spin coefficient $\Omega b/2V$, and turns for recovery are plotted in 12 charts (figs. 6 to 17), grouped so as to permit ready comparison of the effects of center-of-gravity location, tip shape, plan form, section, flaps, and Army standard wing.

The data on these charts are believed to represent the true model values within the following limits (see reference 4):

α	±3°
β	±1½°
Turns for recovery	±¼ turn
$\Omega b/2V$	±3 percent
V	±2 percent

For certain isolated spins in which it was difficult to control the model in the tunnel owing to high air speed or to wandering or oscillatory motion, the foregoing limits may be exceeded.

Some of the results originally presented for the basic loading (reference 1) have been revised in the present figures as a result of additional data from check spins.

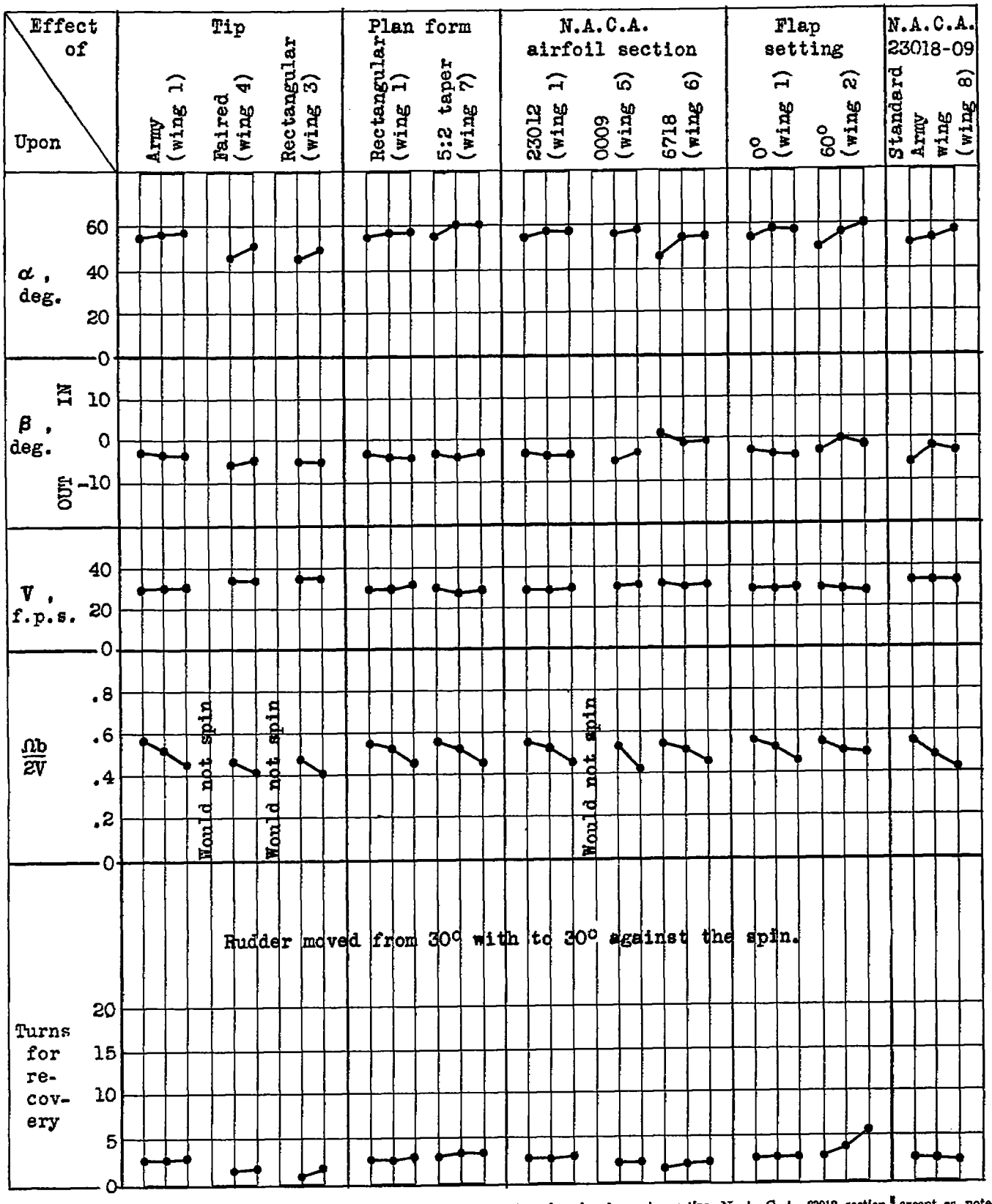

FIGURE 6.—The effect of various wings on the spin characteristics. (Wing has rectangular plan form, Army tips, N. A. C. A. 23012 section, except as noted.) Center-of-gravity location at 15, 25, and 35 percent mean chord, plotted left to right; tail A; rudder 30° with; elevators 0°.

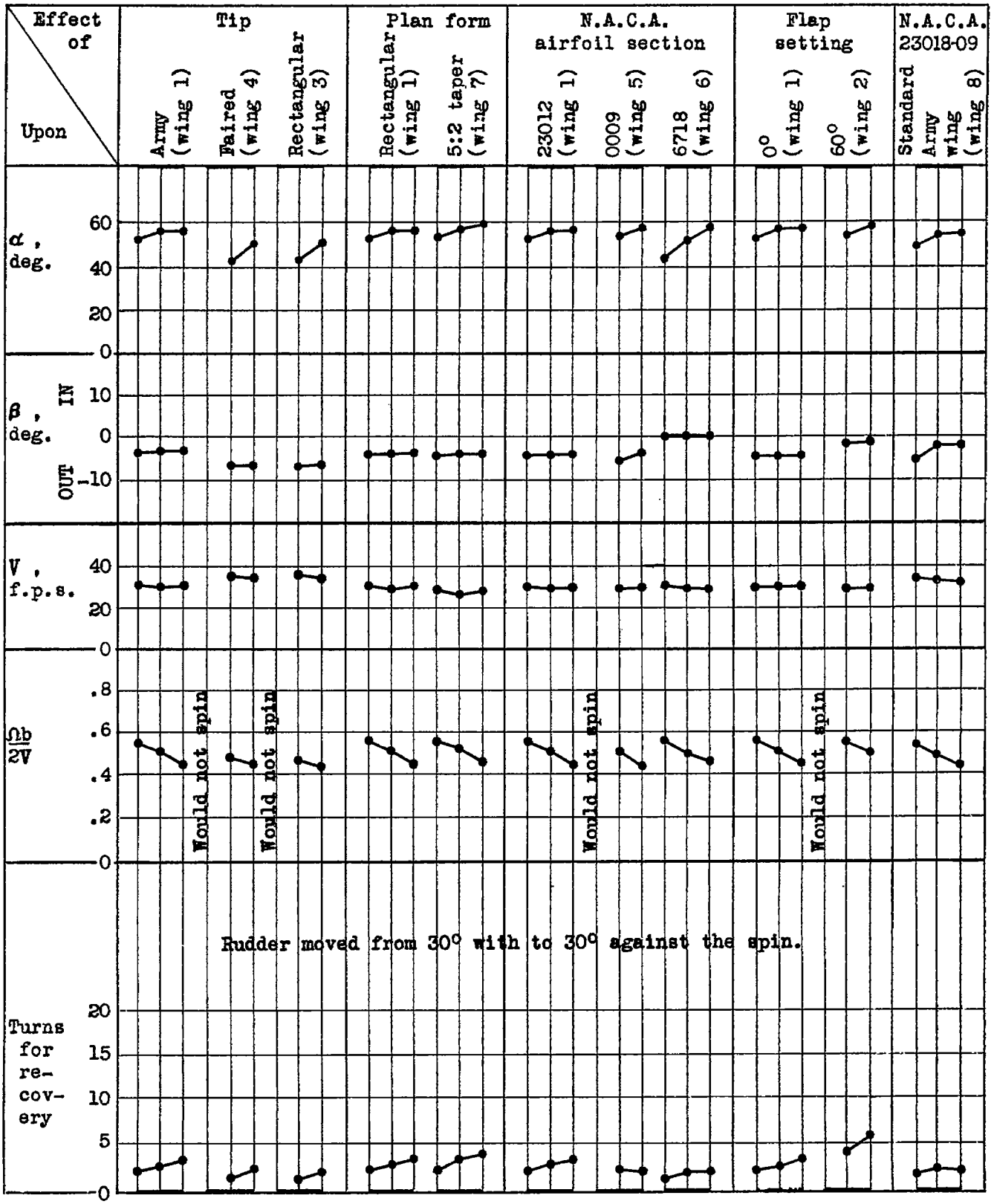

FIGURE 7.—The effect of various wings on the spin characteristics. (Wing has rectangular plan form, Army tips, N. A. C. A. 23012 section, except as noted.) Center-of-gravity location at 15, 25, and 35 percent mean chord, plotted left to right; tail A; rudder 30° with; elevators 20° down.

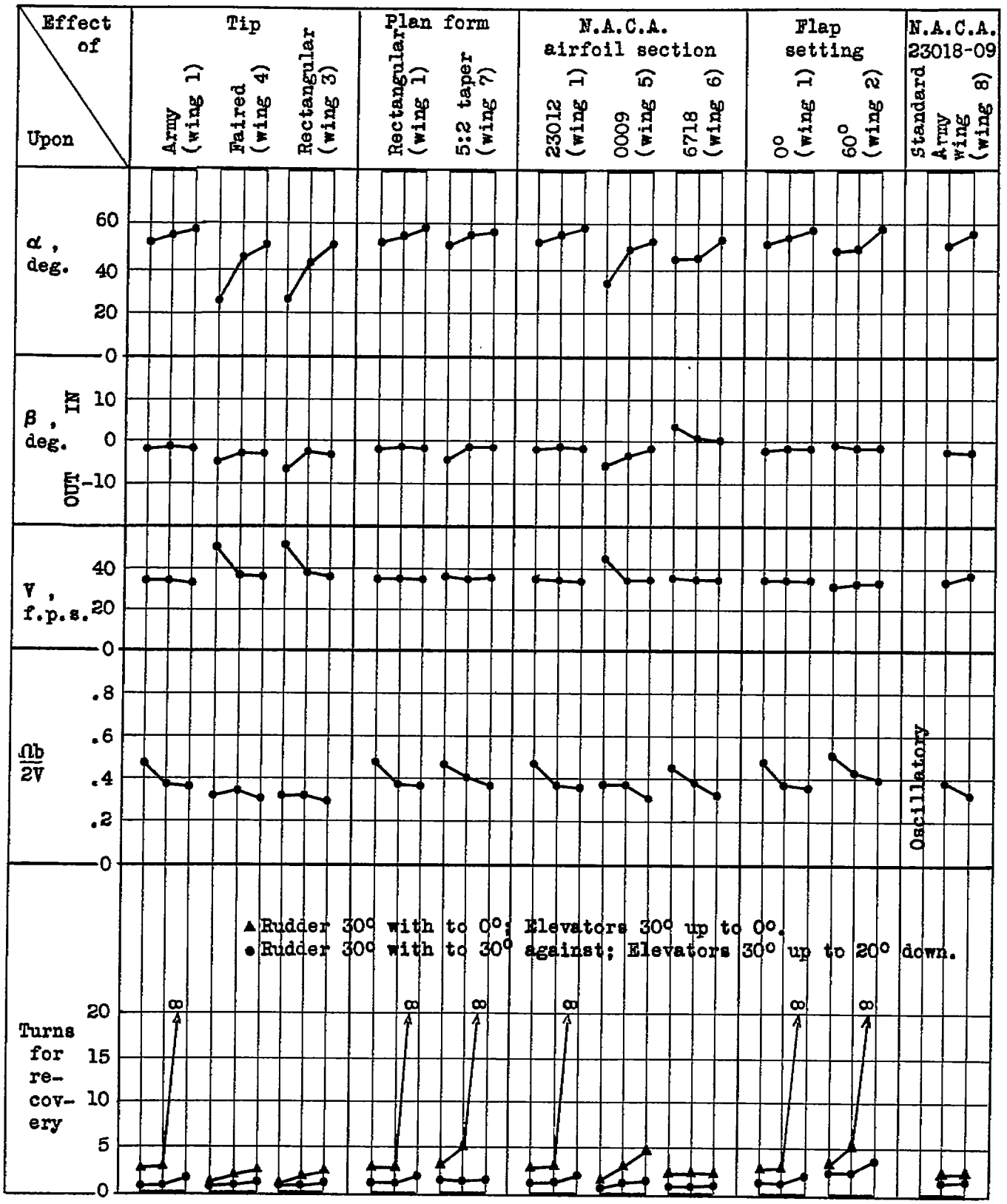

FIGURE 8.—The effect of various wings on the spin characteristics. (Wing has rectangular plan form, Army tips, N. A. C. A. 23012 section, except as noted.) Center-of-gravity location at 15, 25, and 35 percent mean chord, plotted left to right; tail A; rudder 30° with; elevators 30° up.

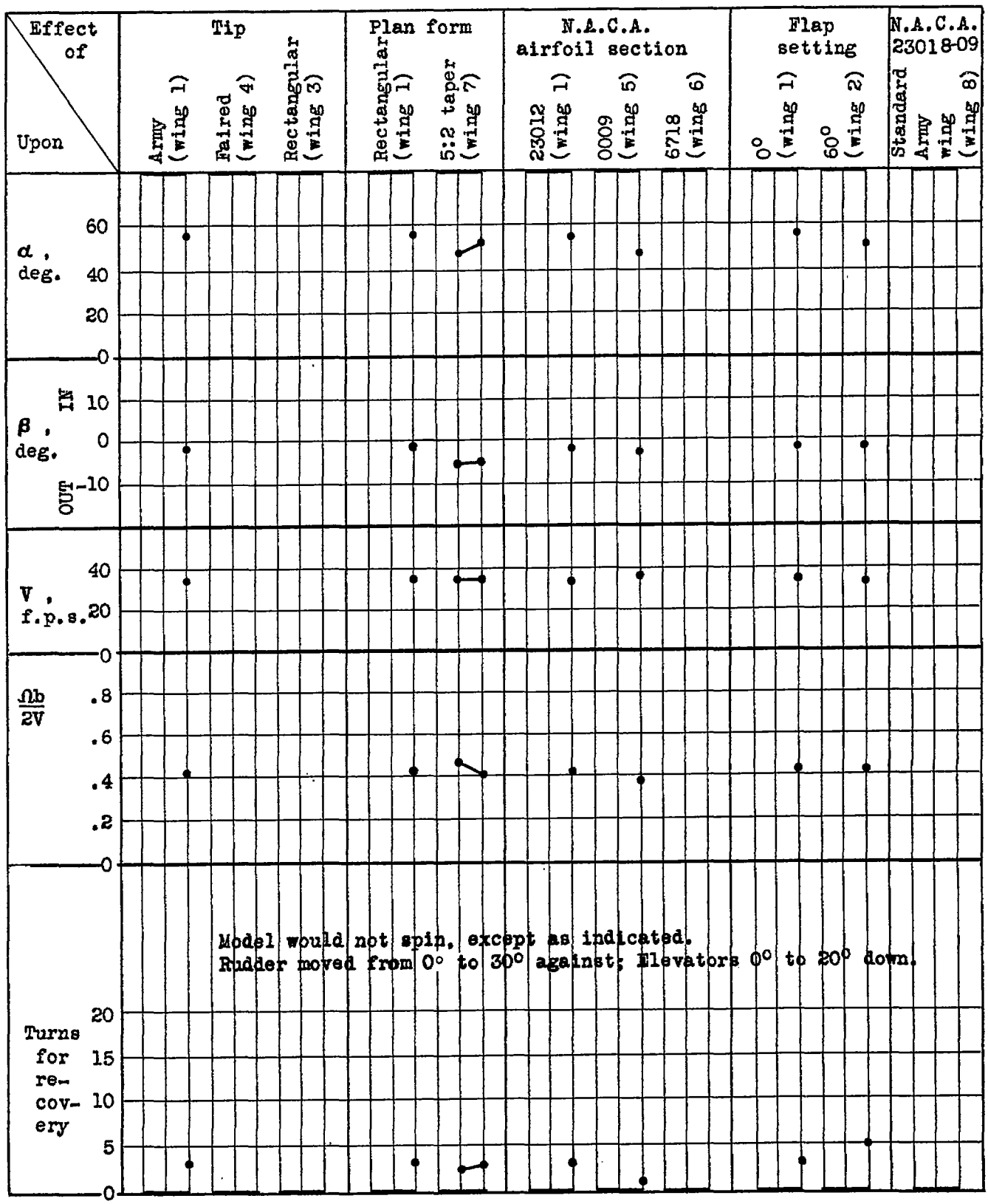

FIGURE 9.—The effect of various wings on the spin characteristics. (Wing has rectangular plan form, Army tips, N. A. C. A. 23012 section, except as noted.) Center-of-gravity location at 15, 25, and 35 percent mean chord, plotted left to right; tail A; rudder 0°; elevators 0°.

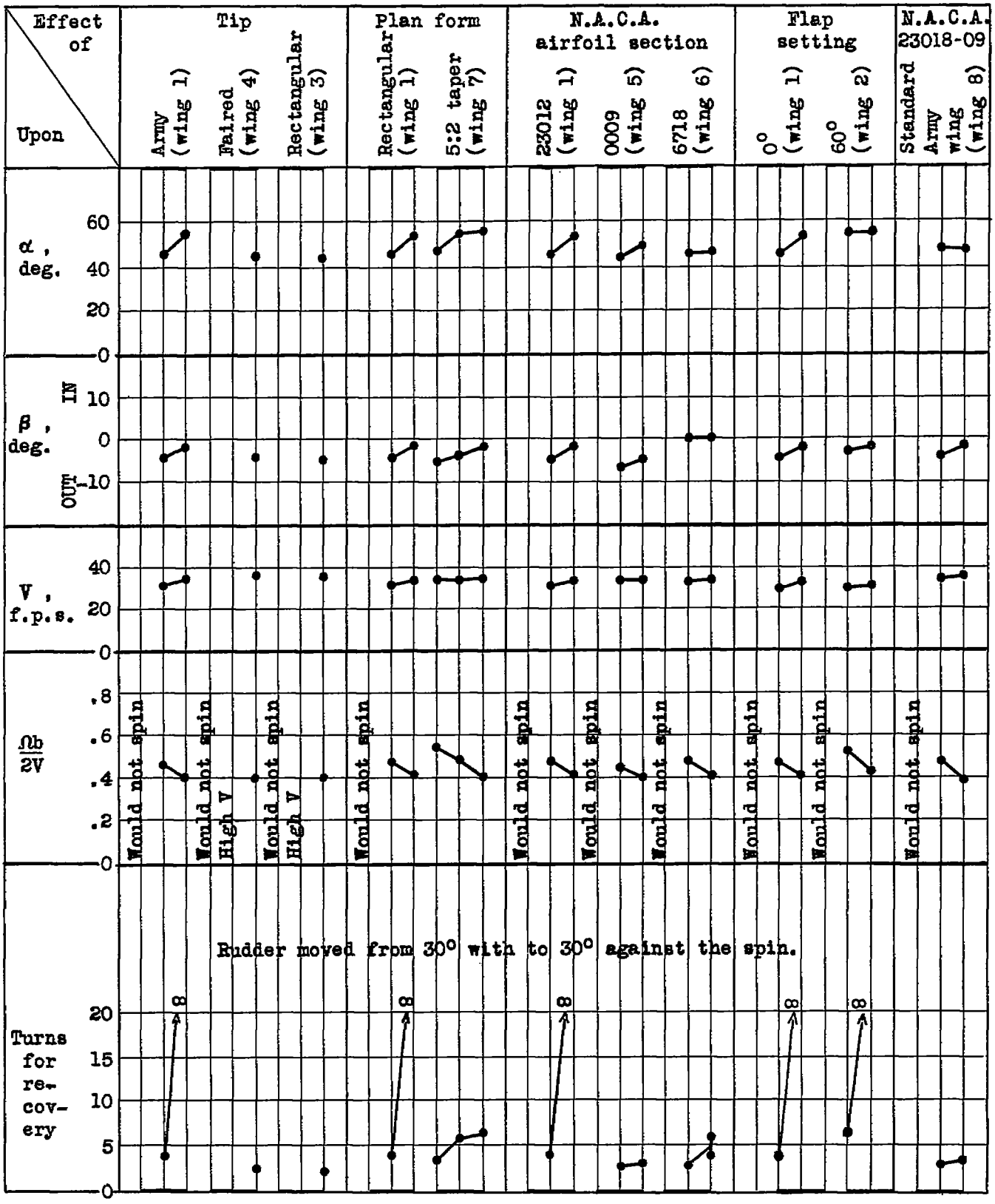

FIGURE 10.—The effect of various wings on the spin characteristics. (Wing has rectangular plan form, Army tips, N. A. C. A. 23012 section, except as noted.) Center-of-gravity location at 15, 25, and 35 percent mean chord, plotted left to right; tail B; rudder 30° with; elevators 0°.

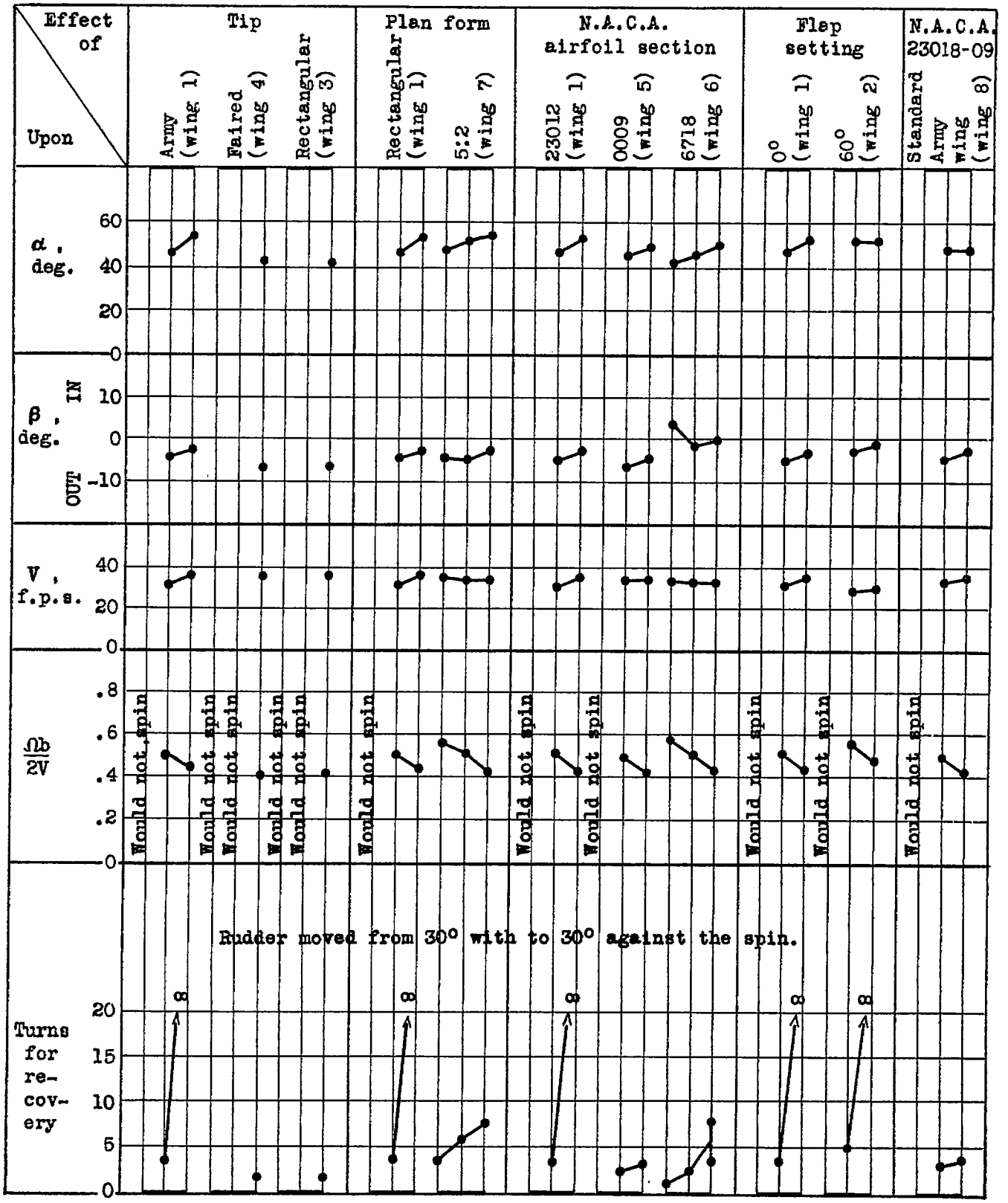

FIGURE 11.—The effect of various wings on the spin characteristics. (Wing has rectangular plan form, Army tips, N. A. C. A. 23012 section, except as noted.) Center-of-gravity location at 15, 25, and 35 percent mean chord, plotted left to right; tail B; rudder 30° with; elevators 20° down.

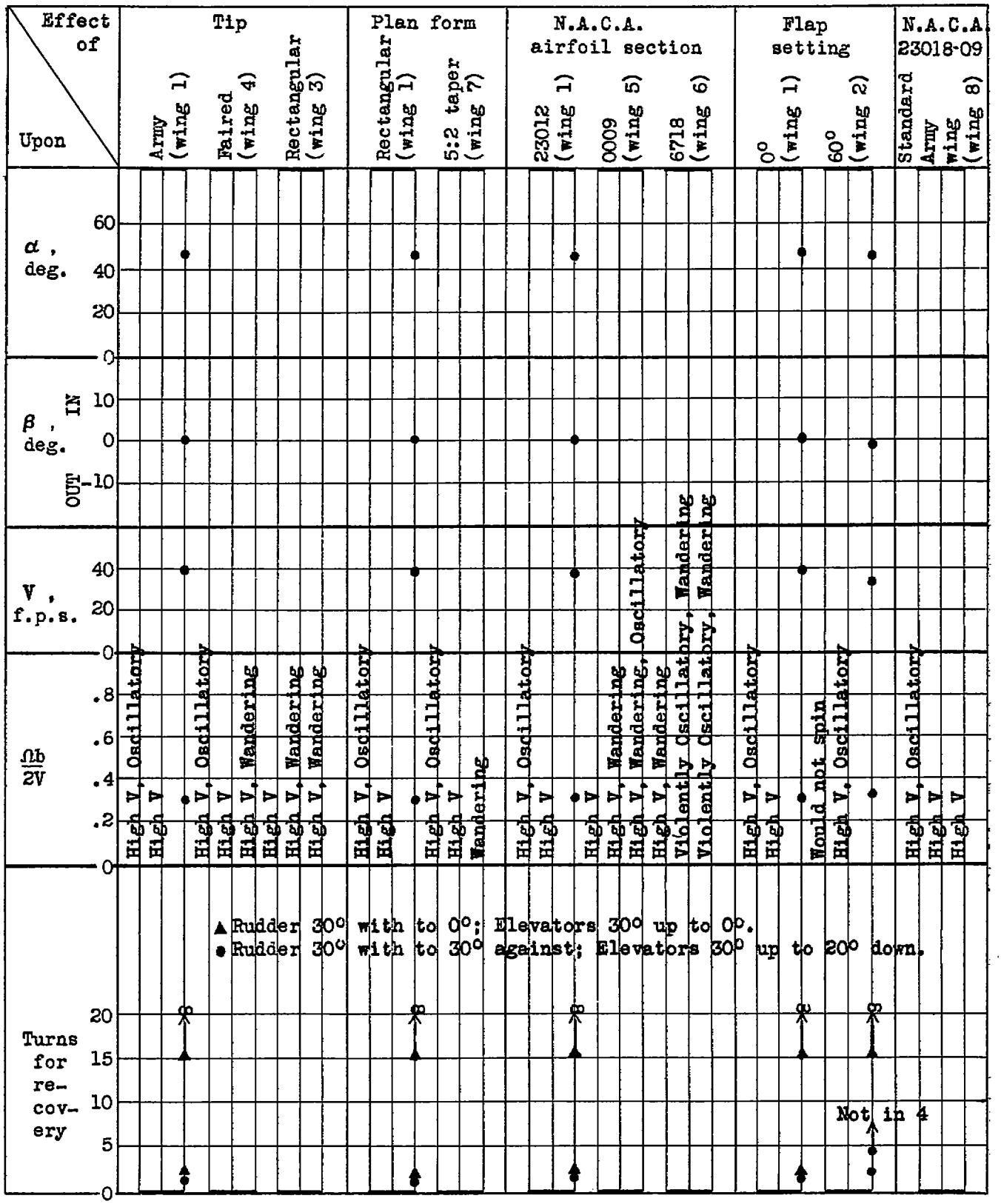

FIGURE 12.—The effect of various wings on the spin characteristics. (Wing has rectangular plan form, Army tips, N. A. C. A. 23012 section, except as noted.) Center-of-gravity location at 15, 25, and 35 percent mean chord, plotted left to right; tail B; rudder 30° with; elevators 30° up.

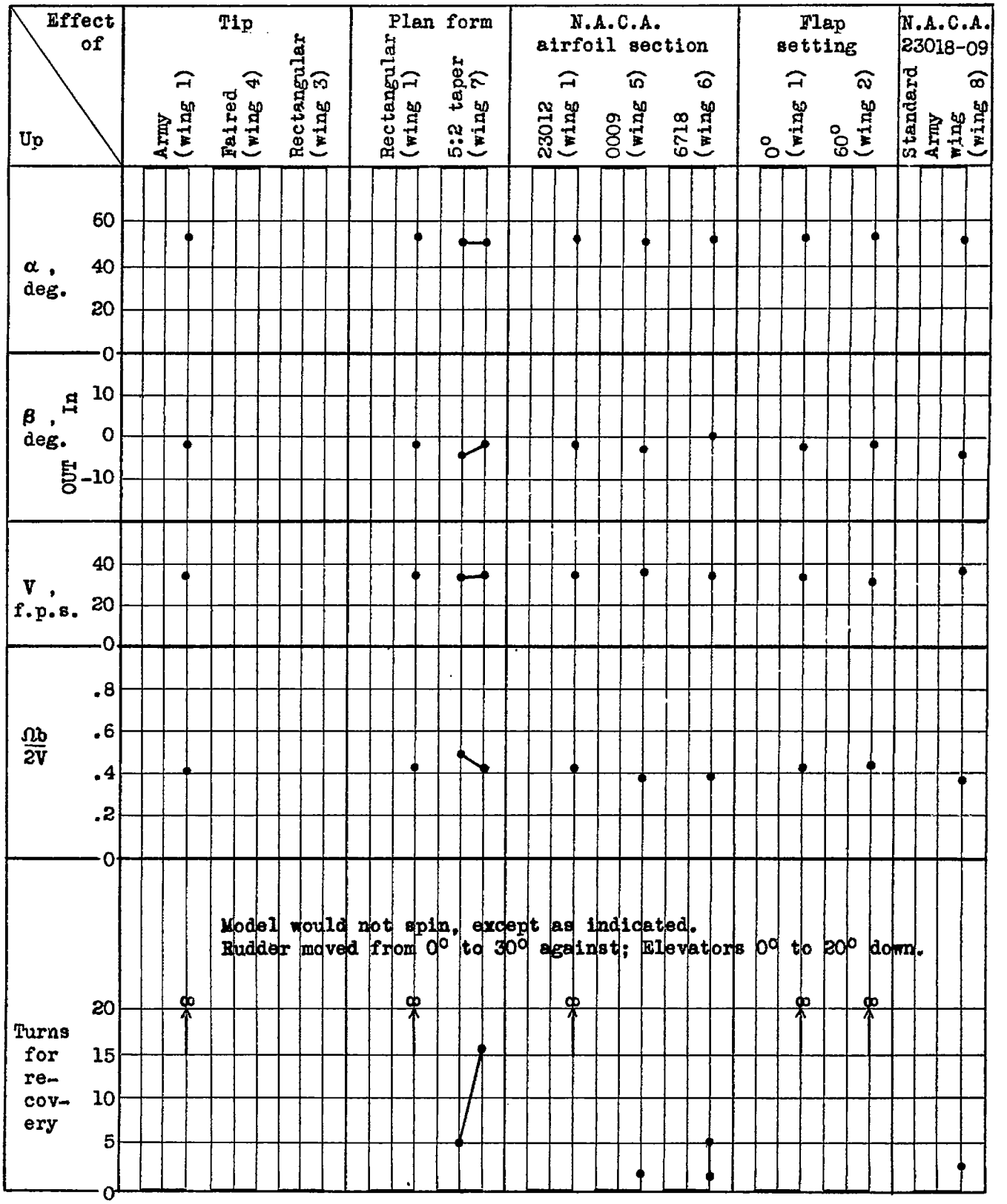

FIGURE 13.—The effect of various wings on the spin characteristics. (Wing has rectangular plan form, Army tips, N. A. C. A. 23012 section, except as noted.) Center-of-gravity location at 15, 25, and 35 percent mean chord, plotted left to right; tail B; rudder 0°; elevators 0°.

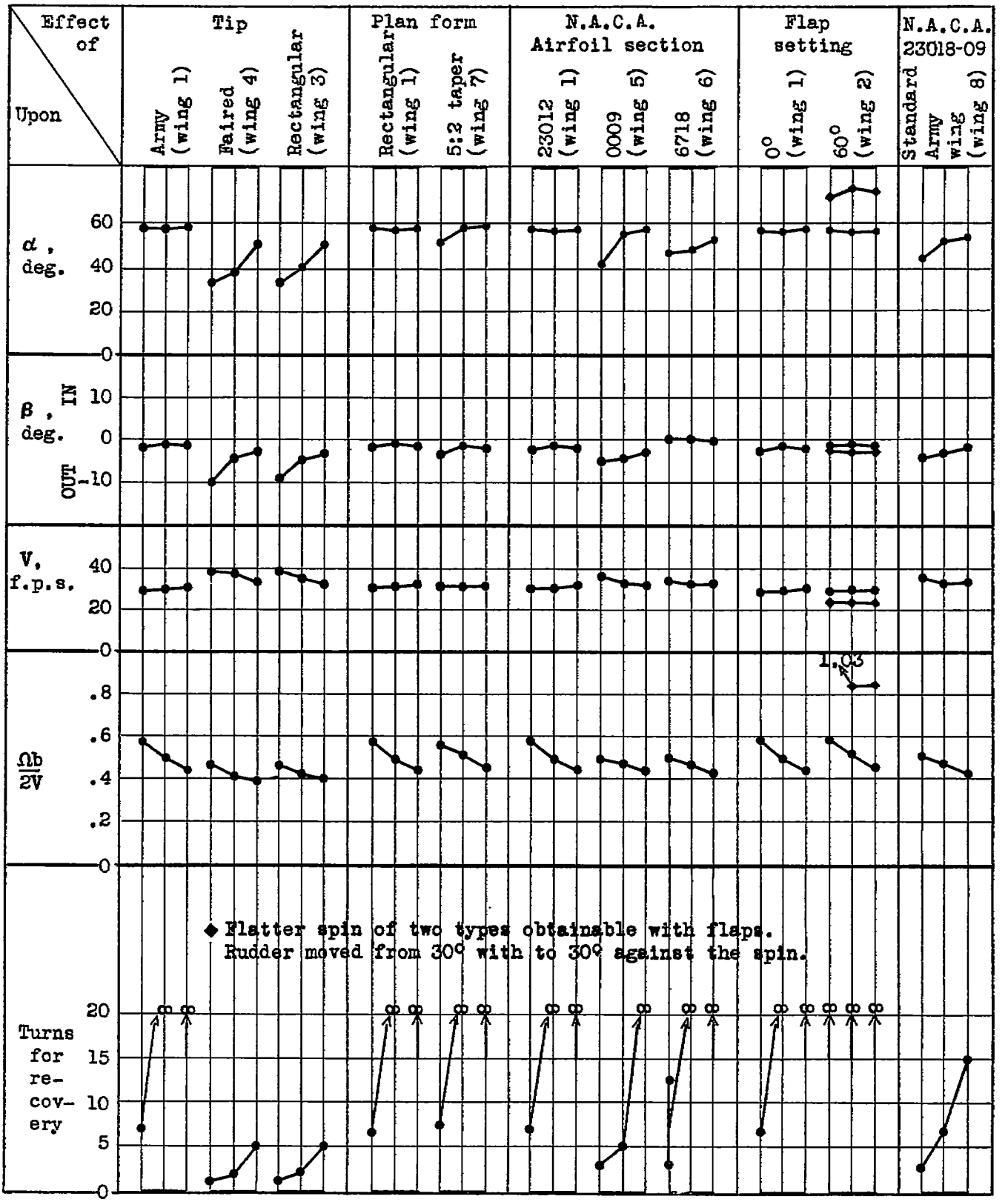

FIGURE 14.—The effect of various wings on the spin characteristics. (Wing has rectangular plan form, Army tips, N. A. C. A. 23012 section, except as noted.) Center-of-gravity location at 15, 25, and 35 percent mean chord, plotted left to right; tail C; rudder 30° with; elevators 0°.

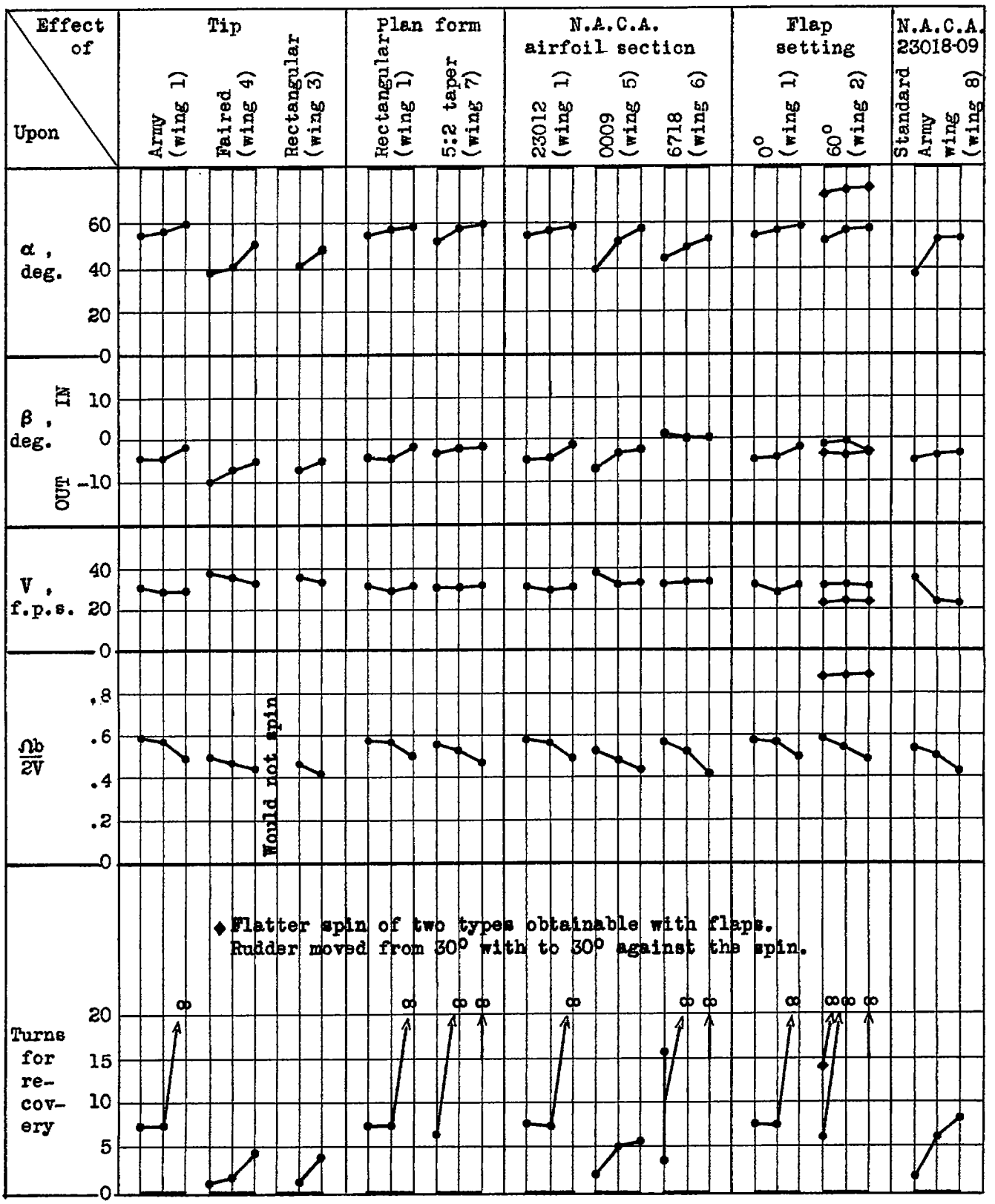

FIGURE 15.—The effect of various wings on the spin characteristics. (Wing has rectangular plan form. Army tips, N. A. C. A. 23012 section, except as noted.) Center-of-gravity location at 15, 25, and 35 percent mean chord, plotted left to right; tail C; rudder 30° with; elevators 20° down.

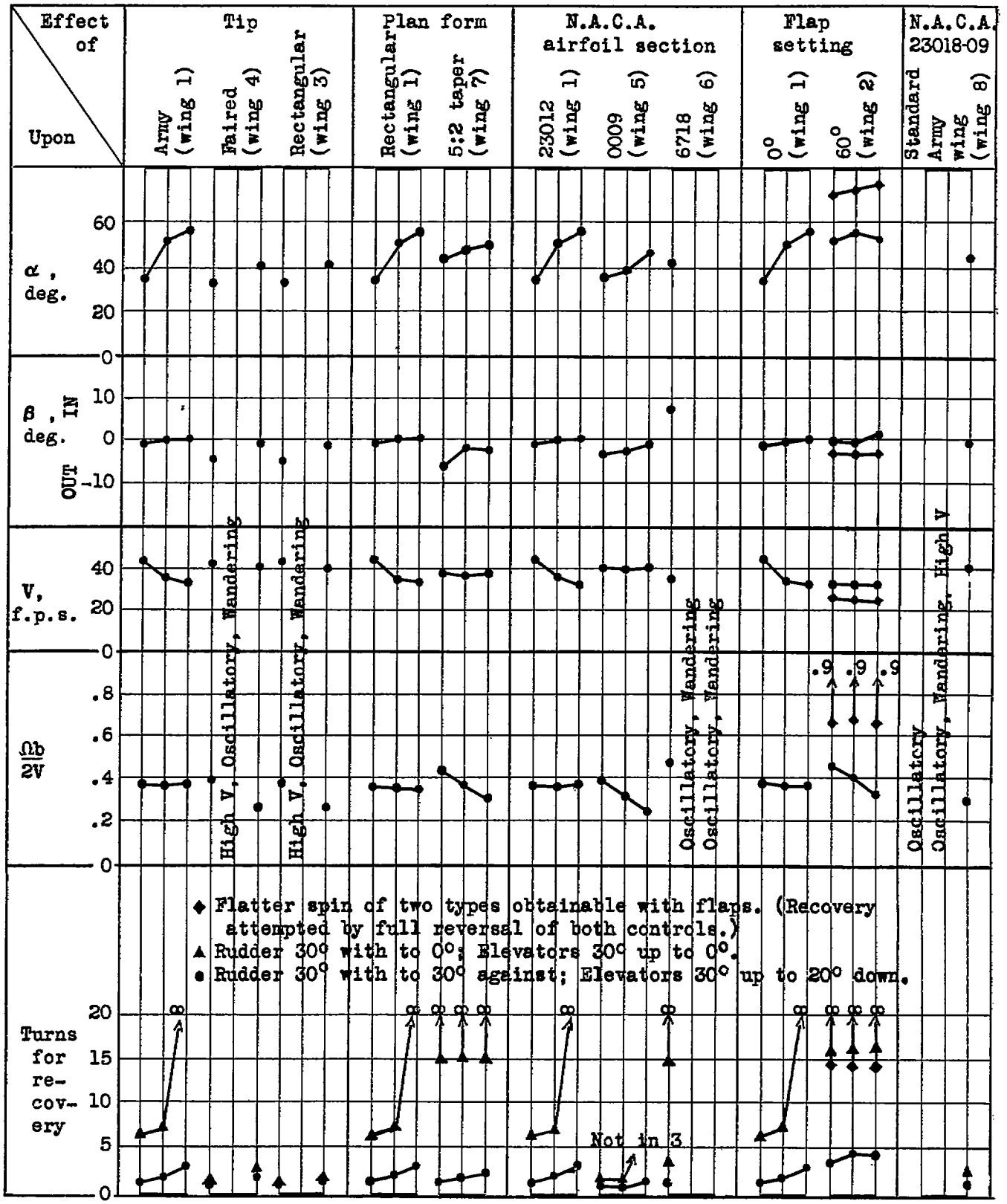

FIGURE 16.—The effect of various wings on the spin characteristics. (Wing has rectangular plan form, Army tips, N. A. C. A. 23012 section, except as noted.) Center-of-gravity location at 15, 25, and 35 percent mean chord, plotted left to right; tail 0; rudder 30° with; elevators 30° up.

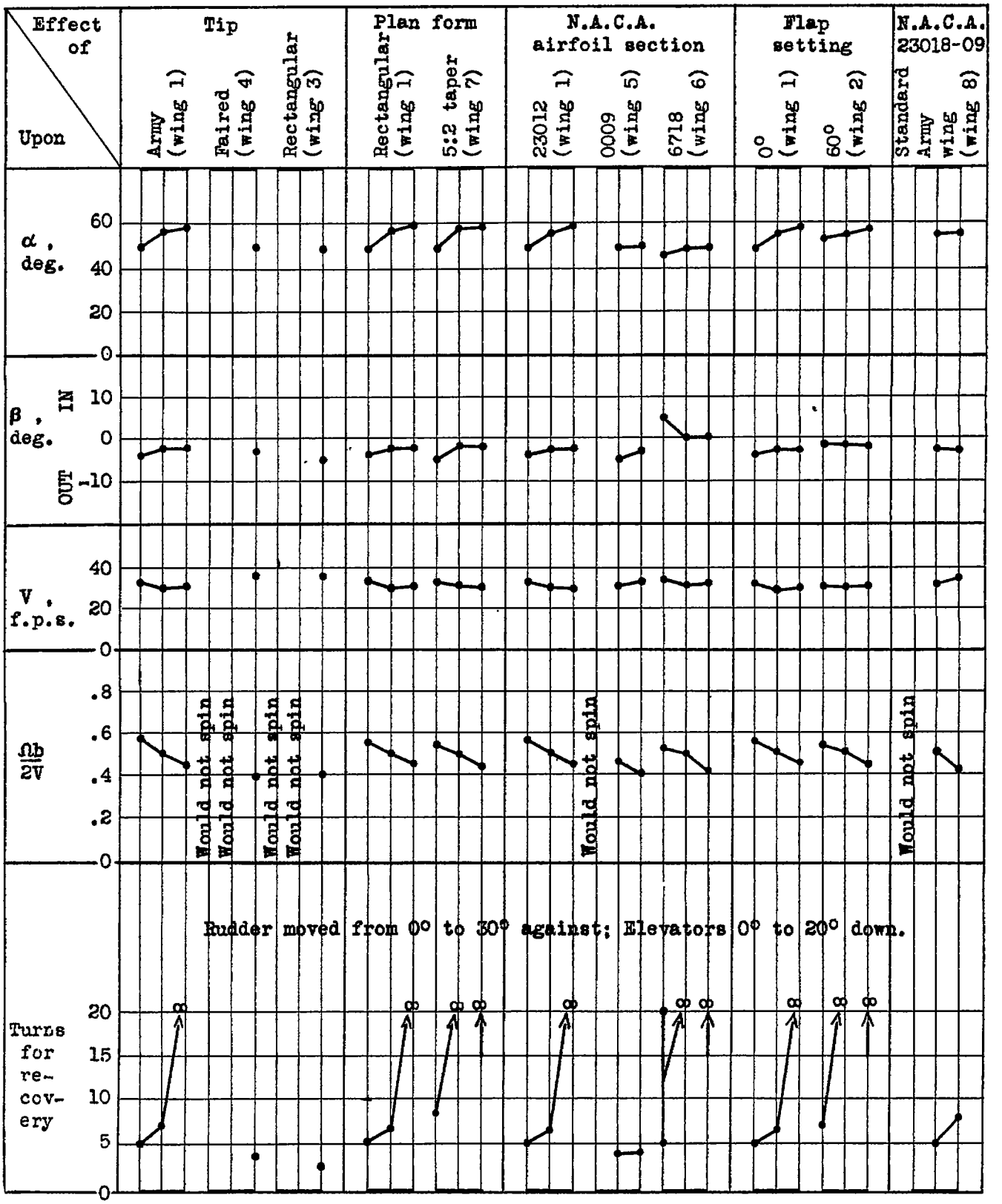

FIGURE 17.—The effect of various wings on the spin characteristics. (Wing has rectangular plan form, Army tips, N. A. C. A. 23012 section, except as noted.) Center-of-gravity location at 15, 25, and 35 percent mean chord, plotted left to right; tail C; rudder 0°; elevators 0°.

DISCUSSION

As noted in references 4 and 6, variations have been observed between model spin-test results and corresponding full-scale spin-test results for a given airplane, probably because of the difference of the Reynolds Number between the tests.

Some remarks on the spin parameters given in figures 6 to 17 appear desirable before proceeding with the discussion of the results. The number of turns for recovery is, of course, the basic parameter and probably the only one of interest from the viewpoint of the pilot. The other parameters, the angle of attack, the angle of sideslip, the rate of descent, and the coefficient $\Omega b/2V$, define the steady spin prior to the recovery attempt. The steady-spin parameters and their correlation with the number of turns for recovery are of considerable importance from research considerations and, consequently, are treated at length in the following discussion.

Tests with tail A (figs. 6 to 9).—Figures 6, 7, and 8 give results for rudder with the spin for different elevator settings. With elevators neutral or down, recoveries were attempted by rudder reversal alone. With elevators up, recoveries were attempted by simultaneous reversal of both controls and by simultaneously neutralizing both controls. Figure 9 gives results for spins with controls neutral, recovery being effected by moving the rudder to full against the spin and the elevators to full down.

The figures indicate that moving the center of gravity from the rearward to the forward location tended to improve the recovery characteristics. The effect was most noticeable for rudder reversal with elevators down and for both controls neutralized. The greatest improvements were obtained for the conditions that had previously given the worst recoveries, the effect of wing variables becoming less important as the center of gravity was moved forward.

As regards the steady-spin parameters, moving the center of gravity forward decreased the angle of attack for all wings at all elevator settings. For wings 3, 4, and 5, this effect was very pronounced when the elevators were up. When the elevators were set at neutral or down, the nose-down tendency apparently increased sufficiently with these wings to put the model out of the autorotation range so that no spins could be obtained. The wing with flaps deflected (wing 2) also gave no spin when the elevators were down and the center of gravity was forward. Outward sideslip generally increased as the center of gravity moved forward, particularly when the elevators were up. The wing of N. A. C. A. 6718 section (wing 6), which normally gave the least outward sideslip, tended to spin with inward sideslip for the forward center-of-gravity location. The rate of vertical descent V generally changed very little with center-of-gravity location. Large decreases in angle of attack, however, such as for wings 3, 4, and 5, are accompanied by a considerably increased rate of descent. The spin coefficient $\Omega b/2V$ increased generally for the steeper spins with the center of gravity forward. When the change in center-of-gravity location considerably increased V, however, the value of $\Omega b/2V$ did not increase.

The effect of difference in tip shape between the rectangular tips and the rounded Army tips was pronounced, the rectangular tips giving the steepest spins, the most outward sideslip, and the fastest recoveries. The difference in results for the rectangular and the faired tips was slight, as might be expected from the small differences in tip shape. Conditions were most critical when the center of gravity was forward with elevators neutral or down. For these cases, the model passed from the nonspinning to the spinning regime as the wing tips were rounded. As the tips were rounded, the sideslip became less outward. This decrease of outward sideslip is in agreement with results from the spin balance (reference 7), which show that the wing with rounded tips, because of its greater autorotative tendency, will require less outward sideslip to produce the rolling moment needed for spinning equilibrium than does the wing with rectangular tips. It is probable that the change in yawing moment due to the decrease in the outward sideslip accounts for the obtaining of a spin with the rounded tips for control settings for which the model would not spin with the rectangular tips when the center of gravity was forward.

The vertical velocity V decreased as the tips became rounded. This decrease appears reasonable because the larger angles of attack give larger drag coefficients. As the drag must balance the fixed weight of the model, the vertical velocity must decrease when the drag coefficient increases. The spin coefficient $\Omega b/2V$ generally increased when the tips were rounded.

Tapering a wing causes a reduction of the chord at the tip and a concentration of the area at the center. On this basis, tapering is somewhat similar to rounding the wing tip and might therefore be expected to have a similar effect. Results on the spin balance indicate such a tendency (reference 7). Results of the present investigation indicate that, as regards recovery characteristics, the wing of 5:2 taper is generally, but not always, slightly worse than the wing with rounded tips.

The tested sections embodied variations in both thickness and camber. These variables had no consistent effect on the recovery or the steady-spin characteristics except for the sideslip angle β. There was a tendency for the sideslip to increase algebraically (become more inward) as the camber (and thickness) increased. This result is in agreement with the results from the spin balance (reference 8). Moving the center of gravity forward increased the outward sideslip for the wing of N. A. C. A. 0009 section, had little effect for the wing of N. A. C. A. 23012 section, and tended to make the sideslip more inward for the wing of N. A. C. A.

6718 section. The wing of N. A. C. A. 23012 section consistently gave the flattest spins and the poorest recoveries. Wings 5 and 6 gave similar recoveries but, with the center of gravity forward, the wing of N. A. C. A. 0009 section (wing 5) would not spin with the elevators neutral or down.

Recoveries with flaps deflected were generally slower than for the plain wing. The effect of center-of-gravity location was much more pronounced when the flaps were deflected. The wing with flaps, like the wing of N. A. C. A. 6718 section, gave less outward sideslip than the basic wing (wing 1). This effect was predicted in reference 9 on the basis of tests made on the spin balance. In this reference, it was also predicted that split flaps would probably have an adverse effect on the recovery characteristics.

The Army standard wing, which is of 2:1 taper, would appear to belong between the rectangular wing with rounded tips and the 5:2 tapered wing according to the plan-form dimensions. The results indicate, however, that the Army standard wing is somewhat better than the rectangular wing with rounded tips (wing 1). The difference probably is a result of the effect of the taper in thickness.

The effect of control setting on the spin characteristics is given by a comparison of figures 6 to 9. Recoveries by rudder reversal with the elevators neutral or down were very similar except when the flaps were deflected and the center of gravity was forward. For these conditions, the model would not spin when the elevators were down. Simultaneous reversal of both controls from elevator-up spins gave the most rapid recoveries. Experience in the spin tunnel indicates that rudder reversal with elevators held up generally will give recoveries similar to those obtained by simultaneous reversal of both controls. Elevator setting had little effect upon the angle of attack of the steady spin. The elevator-up spins, however, were slightly steeper and had higher rates of descent, less outward sideslip, and lower values of $\Omega b/2V$ than the elevator-down spins. When the center of gravity was forward, several wings that gave spins with the elevators up would not spin when the elevators were set down. For these wings, the effect of center-of-gravity movement was more pronounced than for the remaining wings. With these wings, the pitching moment due to setting the elevators down added to the pitching moment due to moving the center of gravity forward was sufficient to prevent spinning equilibrium.

The results with tail A indicated that, in general, the fastest recoveries were associated with the steepest spins which, in turn, were associated with the highest rates of descent. This indication is in agreement with the general belief that a flat spin (high α) will usually lead to a slow recovery. For a given center-of-gravity location, the steepest spins were associated with the lowest values of $\Omega b/2V$. When the center of gravity was moved forward, however, the values of $\Omega b/2V$ increased, although the recoveries became faster. There seemed to be no consistent relationship between turns for recovery and sideslip angle β.

Tests with tail B (figs. 10 to 13).—As previously noted, tail B differs from tail A primarily in that the rudder area was reduced from 5 to 3 percent of the wing area by making the portion of the rudder behind the fuselage the fixed fin area. The results of the tests with the reduced rudder area are given in figures 10 to 13, corresponding to figures 6 to 9 for tail A.

A comparison between the two groups of figures shows that tail B gave consistently steeper spins than tail A for all center-of-gravity locations and elevator settings when the rudder was with the spin, probably because of the increase in the fixed vertical surface. In some instances, spins could not be obtained with tail B for conditions that gave spins with tail A. For all conditions where tail B gave spins, however, the recoveries were slower than with tail A. The comparison shows the importance of unshielded rudder area for effecting satisfactory recoveries from fully developed spins. With the rudder neutral, the two tails generally gave very similar spins, although in two instances spins were obtained with tail B under conditions for which none were obtained with tail A, the differences probably being the result of the slightly greater elevator cut-out of tail A with a corresponding smaller rudder-shielding effect.

The general nature of the effects of center-of-gravity location, wing arrangement, and control setting for tail B was very similar to that for tail A. The magnitudes of the effects were much greater, however, to the extent of being critical as regards the recovery characteristics. With the basic wing, for example, with flaps either up or down and the elevators neutral or down, the model passed from a nonspinning to a nonrecovery regime with tail B as the center of gravity was shifted from the forward to the rearward location. With tail A, the model would spin with these same wing arrangements and elevator settings for all center-of-gravity locations tested, and recoveries were reasonably rapid even for the rearward location. The critical effects of center-of-gravity location, such as those discussed, probably account for some of the large differences between pilots' experiences with certain airplanes.

Tests with tail C (figs. 14 to 17).—When tail C (the fin and rudder of tail B atop a shallow fuselage) was installed on the model, the spins when the rudder was with the spin were very similar to those with tail A. The decreased rudder area with the spin apparently tended to balance the effect of decreased fin area. The lack of rudder control, however, generally led to very much poorer recovery characteristics with tail C. Use of improper control manipulation for recovery, such as moving the elevators down before reversing the rudder or not completely reversing the rudder, was especially

detrimental to recovery results, even for the rectangular wing with rectangular tips when the center of gravity was back. The effect of center-of-gravity location became increasingly important with this tail and the effect of the lack of both fin and rudder area below the horizontal surfaces was very apparent. With this tail arrangement, deflecting the flaps tended to give two types of spins, one very flat and one more normal.

The effects of center-of-gravity location, wing arrangement, and control-setting variations gave trends similar to those for tails A and B, but the inferiority of this tail was most apparent. Improper control manipulation gave poor recovery characteristics for all except the best combination of loading and wing arrangements.

With tail C, the poorest arrangement from spinning considerations, the model was especially critical to variations in center-of-gravity location, wing arrangement, or control manipulation; and the trends obtained with tails A and B were even more apparent with tail C. A comparison of the three tail arrangements indicates that, as the design of the tail approaches that of tail A with sufficient fin and rudder area below the horizontal surfaces, variations in center-of-gravity location, wing arrangement, and control manipulation become less important; but that, if the design simulates that of tail C, the need of exercising care in selection of wing design, the deviation from normal center-of-gravity location, and the control movements in a spin become matters of great importance.

CONCLUSIONS

By analysis of the data presented, the following conclusions may be obtained:

Effects of center-of-gravity location:

1. In nearly every case, moving the center of gravity forward steepens the spin, increases $\Omega b/2V$, and improves recovery; whereas moving the center of gravity back flattens the spin, decreases $\Omega b/2V$, and retards recovery.

2. Forward movement of the center-of-gravity position tends to produce more outward sideslip, except for the wing of N. A. C. A. 6718 section for which the reverse is true.

Effects of wings:

1. *Tip shape.*—Rectangular and faired tips give the steepest spins and the most rapid recoveries. The Army tip consistently gives flatter spins and slower recoveries.

2. *Plan form.*—The wing of 5:2 taper generally gives slower recoveries than the rectangular wing.

3. *Section.*—The N. A. C. A. 23012 section consistently exhibits the poorest recovery characteristics. The N. A. C. A. 0009 section gives the most outward sideslip; whereas the N. A. C. A. 6718 section gives inward sideslip.

4. *Flaps.*—Flaps generally retard recovery. There is little effect for tails A and B, however, when the center of gravity is forward.

5. *Army standard wing.*—The Army standard wing gives more satisfactory recovery characteristics than the basic rectangular wing.

Effects of control setting:

1. In some instances, recoveries from spins with elevators down are somewhat more rapid than from spins with elevators neutral but, in general, there is little difference.

2. Holding the elevators up results in the steepest spins from which, by reversal of both controls, the most rapid recoveries are obtained.

Effects of tail arrangement:

1. The tail with deepened fuselage, raised stabilizer and elevators, and full-length rudder gives the most satisfactory recoveries, although the tail with deepened fuselage, raised stabilizer and elevators, and short rudder gives the steepest spins.

2. The more nearly conventional tail (short rudder atop a shallow fuselage) gives the slowest recoveries.

3. The importance of the other variables increases as the effectiveness of the tail unit decreases.

Relationships between spin characteristics:

1. For a given tail arrangement, steep spins are usually associated with high rates of descent and rapid recoveries; for a given center-of-gravity location, steep spins are associated with low $\Omega b/2V$.

2. For any center-of-gravity position, there is no consistent relationship between the sideslip of the steady spin and the turns required for recovery.

Langley Memorial Aeronautical Laboratory,
National Advisory Committee for Aeronautics,
Langley Field, Va., *March 28, 1939.*

REFERENCES

1. Seidman, Oscar, and Neihouse, A. I.: Free-Spinning Wind-Tunnel Tests of a Low-Wing Monoplane with Systematic Changes in Wings and Tails. I. Basic Loading Conditions. T. N. No. 608, N. A. C. A., 1937.
2. Seidman, Oscar, and Neihouse, A. I.: Free-Spinning Wind-Tunnel Tests of a Low-Wing Monoplane with Systematic Changes in Wings and Tails. II. Mass Distributed Along the Fuselage. T. N. No. 630, N. A. C. A., 1937.
3. Seidman, Oscar, and Neihouse, A. I.: Free-Spinning Wind-Tunnel Tests of a Low-Wing Monoplane with Systematic Changes in Wings and Tails. III. Mass Distributed Along the Wings. T. N. No. 664, N. A. C. A., 1938.
4. Zimmerman, C. H.: Preliminary Tests in the N. A. C. A. Free-Spinning Wind Tunnel. T. R. No. 557, N. A. C. A., 1936.
5. Shortal, Joseph A.: Effect of Tip Shape and Dihedral on Lateral-Stability Characteristics. T. R. No. 548, N. A. C. A., 1935.

6. Bamber, M. J., and House, R. O.: Spinning Characteristics of the XN2Y-1 Airplane Obtained from the Spinning Balance and Compared with Results from the Spinning Tunnel and from Flight Tests. T. R. No. 607, N. A. C. A., 1937.
7. Bamber, M. J., and House, R. O.: Spinning Characteristics of Wings. III—A Rectangular and a Tapered Clark Y Monoplane Wing with Rounded Tips. T. N. No. 612, N. A. C. A., 1937.
8. Bamber, M. J., and House, R. O.: Spinning Characteristics of Wings. V—N. A. C. A. 0009, 23018, and 6718 Monoplane Wings. T. N. No. 633, N. A. C. A., 1938.
9. Bamber, M. J.: Aerodynamic Effects of a Split Flap on the Spinning Characteristics of a Monoplane Model. T. N. No. 515, N. A. C. A., 1934.