UNCLASSIFIED

~~CONFIDENTIAL~~

Copy
RM H55G07

NACA RM H55G07

NACA

RESEARCH MEMORANDUM

WING PRESSURE DISTRIBUTIONS OVER THE LIFT RANGE OF THE CONVAIR XF-92A DELTA-WING AIRPLANE AT SUBSONIC AND TRANSONIC SPEEDS

By Earl R. Keener and Gareth H. Jordan

High-Speed Flight Station
Edwards, Calif.

FOR REFERENCE

LIBRARY COPY

DEC 1 1955

LANGLEY AERONAUTICAL LABORATORY
LANGLEY FIELD, VIRGINIA

NOT TO BE TAKEN FROM THIS ROOM

CLASSIFIED DOCUMENT

This material contains information affecting the National Defense of the United States within the meaning of the espionage laws, Title 18, U.S.C., Secs. 793 and 794, the transmission or revelation of which in any manner to an unauthorized person is prohibited by law.

CLASSIFICATION CHANGED

To UNCLASSIFIED

By authority of NACA RA-129 Effective Date 7/17/58 JSH

NATIONAL ADVISORY COMMITTEE FOR AERONAUTICS

WASHINGTON

November 30, 1955

~~CONFIDENTIAL~~

UNCLASSIFIED

NASA Technical Library
3 1176 01435 9906

NATIONAL ADVISORY COMMITTEE FOR AERONAUTICS

RESEARCH MEMORANDUM

WING PRESSURE DISTRIBUTIONS OVER THE LIFT RANGE OF THE CONVAIR XF-92A DELTA-WING AIRPLANE AT SUBSONIC AND TRANSONIC SPEEDS

By Earl R. Keener and Gareth H. Jordan

SUMMARY

Chordwise pressure distributions were measured over the left wing of the Convair XF-92A delta-wing airplane to determine the effect of lift upon the wing characteristics at subsonic and transonic Mach numbers. The data were obtained throughout the Mach number range of 0.30 to 0.93. Reynolds number based on the mean aerodynamic chord of the wing varied between 22×10^6 and 49×10^6.

High leading-edge suction, followed by a leading-edge-separation vortex, resulted from the small leading-edge radius. The outboard wing sections experienced a higher effective angle of attack because of the high degree of taper and large degree of sweep. As a result the high leading-edge suction and the leading-edge-separation vortex occurred first at the wing tip and moved inboard with increasing angle of attack.

The critical Mach number of the wing decreased from 0.82 to 0.65 with an increase in airplane normal-force coefficient from 0.06 to 0.17.

The wing-section lift and pitching-moment curves were very nonlinear with angle of attack because of the large three-dimensional effects. The wing sections at the tip stalled at an airplane normal-force coefficient of about 0.20. The spanwise load distributions tended to approach a tringular shape at high lift as a result of the inboard movement of wing-section stall.

Wing-section stall resulted in a local reversal in the elevon-section load from down-load to up-load.

INTRODUCTION

Flight tests of the Convair XF-92A delta-wing airplane have been conducted at the NACA High-Speed Flight Station at Edwards, Calif. Throughout the tests pressure distributions were measured over the left wing to determine the chordwise and spanwise load distributions of the 60° delta wing. Preliminary results were discussed in reference 1, which presents wing pressure distributions over the Mach number range of 0.74 to 1.01 at low lift. This paper presents the effects of angle of attack and Mach number on the wing pressure distributions at Mach numbers up to 0.93. Aerodynamic loads obtained by strain-gage measurements are presented in reference 2.

SYMBOLS

$b/2$	wing semispan, ft
$b'/2$	wing-panel semispan, spanwise distance from $0.197b/2$ to wing tip, ft
C_{N_A}	airplane normal-force coefficient, nW/qS
c	local wing chord parallel to plane of symmetry, ft
$\bar{c}$	average chord of wing panel, ft
c'	mean aerodynamic chord of wing panel, $\frac{2}{S'}\int_0^{b'/2} c^2 dy'$, ft
c_m	section pitching-moment coefficient about a line perpendicular to the longitudinal axis of airplane, passing through $0.25c'$, $c_{m_{c/4}} + 0.75\left(1 - \frac{c'}{c}\right)c_n$
$c_m(c/\bar{c})^2$	section pitching-moment parameter
$c_{m_{c/4}}$	section pitching-moment coefficient about $0.25c$, $\int_0^1 \frac{p_l - p_u}{q}\left(0.25 - \frac{x}{c}\right)d\frac{x}{c}$

c_n	section normal-force coefficient, $\int_0^1 \frac{p_l - p_u}{q} d\frac{x}{c}$
$c_n(c/\bar{c})$	section normal-load parameter
M	free-stream Mach number
n	normal-load factor
P	pressure coefficient, $\frac{p - p_o}{q}$
P_{cr}	critical pressure coefficient (pressure coefficient at sonic velocity), $\frac{2}{\gamma M^2}\left[\left(\frac{2}{\gamma + 1} + \frac{\gamma - 1}{\gamma + 1} M^2\right)^{\frac{\gamma}{\gamma-1}} - 1\right]$
p	local static pressure, lb/sq ft
p_o	free-stream static pressure, lb/sq ft
p_l	local static pressure on lower wing surface, lb/sq ft
p_u	local static pressure on upper wing surface, lb/sq ft
q	free-stream dynamic pressure, lb/sq ft
S	total wing area, including area projected through fuselage, sq ft
S'/2	area of wing panel outboard of 0.197b/2, sq ft
W	airplane weight, lb
x	chordwise distance rearward of leading edge of local chord, ft
y'	spanwise distance outboard of 0.197b/2, ft
α	measured airplane angle of attack corrected for boom bending, deg
δ_{e_L}	left elevon position, deg
γ	ratio of specific heats

DESCRIPTION OF AIRPLANE

A three-view drawing of the Convair XF-92A delta-wing airplane used in these tests is shown in figure 1. Photographs of the airplane are presented in figure 2. Pertinent dimensions are given in table I.

The wing plan form is an equilateral triangle with an aspect ratio of 2.31. The wing is untwisted and has no incidence. An NACA $65_{(06)}$-006.5 airfoil section is employed at all streamwise stations. Table II gives the ordinates of the airfoil section.

Longitudinal control is obtained by means of full-span unsealed elevons which have a constant chord rearward of the hinge line (except at the tip) with a small horn balance at the tip (fig. 2).

INSTRUMENTATION AND ACCURACY

Standard NACA film-recording instruments were used to measure and record the wing-surface pressures, indicated free-stream static and dynamic pressures, normal acceleration, angle of attack, angle of sideslip, elevon position, and rolling and pitching angular velocities and accelerations. All instruments were correlated by a common timer.

A pitot-static tube with an NACA type A-6 total-pressure head, described in reference 3, was mounted on a nose boom and the static pressure error was determined in flight. The total estimated error in Mach number is within ±0.01.

The angle-of-attack and sideslip vanes were attached to the nose boom. Measured angle of attack was corrected only for deflection of the boom resulting from normal acceleration. The accuracy of the angle-of-attack recorder was estimated to be ±0.5°.

Flush-type static-pressure orifices installed in the left wing were arranged in five streamwise rows. The chordwise and spanwise locations of these orifices are given in table III and figure 3, respectively. The orifices were connected by tubing through the wing to the manometers in the instrument compartment. It was necessary to pass the tubing from the elevon orifices through the elevon-actuator fairing, resulting in a larger fairing than that necessary to house only the elevon actuator.

Lag in the pressure recording system due to pressure-tube length was determined by the method for photographic instruments presented in reference 4. The lag was found to be negligible for the rates of change

of pressure encountered for the data presented in this paper, except at high lift $\left(C_{N_A} > 0.4\right)$ where the pitching rates were quite high. No lag corrections were applied to the data.

Accuracies of other pertinent recorded quantities are:

Surface-pressure measurements, $p - p_o$, lb/sq ft	±5
Normal acceleration, n, g units	±0.05
δ_{e_L}, deg	±0.2

These accuracies resulted in the following estimated probable accuracy in some of the coefficients for the Mach number range of 0.70 to 0.93:

P	±0.02
c_n	±0.03
$c_{m_{c/4}}$	±0.016
C_{N_A}	±0.02

Below $M = 0.70$ the accuracy of these coefficients decreases as a result of low values of dynamic pressure.

TESTS

The data presented were obtained from a stall approach at an altitude of 20,000 feet and from wind-up turns at Mach numbers from 0.70 to 0.93 at 25,000 feet to 35,000 feet. During the turns at the higher Mach numbers about 5,000 feet in altitude was lost in an attempt to hold constant Mach number. Reynolds number based on the mean aerodynamic chord of the wing varied between 22×10^6 and 49×10^6.

It was desired that the data show the variation with lift and Mach number of the wing characteristics of a delta-wing aircraft at subsonic and transonic Mach numbers. Longitudinal control of the XF-92A airplane is obtained by means of elevons on the wing, therefore the characteristics of the wing at zero elevon deflection could not be obtained throughout the lift range. Consequently, when possible, data were selected from the tests at flight conditions for which the airplane was essentially balanced (near zero angular velocity and angular acceleration). The selection of data points was further complicated by the decrease in stability experienced by the airplane at moderate lift (ref. 5). Above the stability boundary the airplane experienced relatively large pitching accelerations, depending on the rate of entry into the region of decreased stability. However, it was possible to select data at $C_{N_A} < 0.4$ (which includes data above the stability boundary at $M > 0.85$) for which the

angular velocities and accelerations were low and the airplane was nearly balanced. At $C_{N_A} > 0.4$ the conditions were not generally those for balance; therefore data are presented in this region primarily to illustrate the general shape of the chordwise and spanwise load distribution.

RESULTS AND DISCUSSION

Chordwise Pressure Distributions

The pressure coefficients obtained from the wing-pressure measurements are presented in tables IV to XI. The data in tables IV to VI are from complete maneuvers involving large losses in Mach number. (The data in table IV are from a stall approach and the data in tables V and VI are from wind-up turns at initial Mach numbers of 0.72 and 0.91.) Tables VII to X present data for Mach numbers of approximately 0.76, 0.82, 0.88, and 0.93. Table XI presents data for $C_{N_A} \approx 0.30$ throughout the Mach number range tested. From the data presented in the tables, representative chordwise pressure distributions were selected for the stall approach and for Mach numbers of approximately 0.70, 0.82, 0.88, and 0.93. These distributions are presented in figures 4 to 8. The critical pressure coefficient is noted on each pressure diagram, with the exception of the stall approach, for which the distributions were all subcritical. Figures 9 to 11 present isometric views of some of the chordwise pressure distributions of figures 4, 5, and 7 in order to show the spanwise relationship of the distributions. As a further aid in studying the flow over the wing, pressure contours (lines of constant pressure coefficient) for the upper surface are presented in figures 12 to 14 for the same conditions as in figures 9 to 11. Included in figures 12 to 14 are spanwise pressure distributions at several stations as determined from the pressure contours.

Effects of the upward deflection of the elevon and the presence of the elevon-actuator fairing (fig. 3) may be seen in all the figures. The deflected elevon caused abrupt changes in the pressure distributions at the elevon junction and the elevon-actuator fairing induced local increases in velocity which affected a large surrounding area of the wing. Small irregularities in the distributions may be attributed to the deformation of the wing skin, which is not a stressed skin.

Leading-edge suction.- The first point of interest in the pressure distributions of figures 4 to 8 is the high leading-edge suction that first appears between $C_{N_A} = 0.1$ and $C_{N_A} = 0.2$. The leading-edge suction is typified by the prominent low-pressure peak at the leading edge and results from the small leading-edge radius which induces high

leading-edge velocities. The isometrics in figures 9 to 11 and the pressure contours and spanwise pressure distributions in figures 12 to 14 show that, throughout the Mach number range tested, the leading-edge suction occurred first at the outboard sections and moved inboard with increasing C_{N_A}. This condition indicates a higher effective angle of attack for the outboard sections probably as a result of both taper and sweep.

Leading-edge-separation vortex.- The second point of interest in the pressure distributions of figures 4 to 8 is the leading-edge-separation vortex. The existence at low speeds of a separation vortex in the flow about the leading edge of swept wings with small leading-edge radii has been well established previously and is discussed for triangular wings in references 6 to 11. These references show that at low speeds the vortex originates on the upper surface at the leading edge near the wing tip and moves inboard with increasing angle of attack. Behind the vortex the separated boundary layer reattaches and flows to the trailing edge as a turbulent boundary layer.

Reference 9, which includes pressure-distribution data measured over the left wing of the XF-92A airplane in the Ames 40- by 80-foot wind tunnel, reports evidence of a leading-edge-separation vortex at low speeds. The pressure distributions of figures 4 to 14 establish the existence of the vortex at Mach numbers up to 0.93, the test limit; however, the distributions cannot be used to determine accurately the position of the vortex. The effect of the vortex upon the pressure distributions was to broaden considerably the low-pressure peak associated with the leading-edge suction and to cause a trough in the pressure peak (ref. 10, fig. 30(c)). This trough is clearly shown in figures 4 to 14 at $C_{N_A} > 0.4$. At $C_{N_A} < 0.4$ the vortex is obscure in the pressure distributions. The inboard movement of the vortex is probably associated with the higher effective angle of attack of the outboard wing sections, mentioned previously in the discussion of leading-edge suction.

Trailing-edge separation.- The third point of interest in the pressure distributions of figures 4 to 8 is the separation of the flow at the trailing edge. References 8, 10, and 11 show that at low speeds the region of a triangular wing outboard of the vortex is separated, whereas behind the vortex the flow reattaches and is unseparated. Consequently the wing sections outboard of the vortex are stalled. As the vortex moves inboard with increasing angle of attack, the separated region also moves inboard.

The pressure distributions in figures 4 to 14 indicate that at all Mach numbers tested separation occurred in the flow over the rear of both upper and lower surfaces of the wing tip at $C_{N_A} \approx 0.20$. The pressure distributions indicated also that the separated region moved inboard

with increasing angle of attack. Separation is indicated by the failure of the trailing-edge pressures to recover to near free-stream values. The low C_{N_A} at which the flow at the wing tip separated indicates that separation over the upper surface probably resulted from the formation of the leading-edge-separation vortex. The separation over the lower surface occurred only on the elevon and must have been associated with the upward deflection of the elevon. Reference 12 reports that, at Mach numbers up to 0.88, the onset of buffeting occurred at about the same angle of attack as the flow separation at the wing tip.

Critical Mach number.- A portion of the critical Mach number boundary for the wing is presented in figure 15. The critical Mach number (free-stream Mach number at which the local velocity becomes sonic) was obtained from the pressure distributions by noting the Mach number and the C_{N_A} at which the local pressure coefficient exceeded (negatively) the critical pressure coefficient. Figure 15 shows that as the C_{N_A} increased from 0.06 to 0.17 the critical Mach number of the wing decreased from 0.82 to 0.65. At Mach numbers up to 0.81, the upper surface became critical first; however, above $M \approx 0.81$ the lower surface became critical first as a result of the local induced velocities over the elevon-actuator fairing.

Wing shock waves.- At $M \approx 0.70$ the upper surface was supercritical above angles of attack of about 4°. Therefore the rapid pressure recoveries could occur only through a shock wave system. In general there were two rapid pressure recoveries and therefore two shock waves. These shock waves may be seen best in the isometrics of figure 10. One shock wave was at the leading edge behind the low-pressure peak associated with leading-edge suction; the other was behind the leading-edge-separation vortex.

Figure 11 indicates that at $M \approx 0.88$ the shock wave pattern on the wing was more complex. At low angles of attack the upper surface had a shock wave ahead of the elevon junction and roughly parallel to it. The lower surface had a shock wave at about the midchord of the elevon. As the angle of attack increased these shock waves remained approximately stationary, but changed in intensity. In addition a shock wave occurred behind the leading-edge-separation vortex. A shock wave does not seem to have occurred exactly at the leading edge.

Wing-Section Aerodynamic Characteristics

Section lift.- Figure 16 presents the c_n curves for each of the orifice stations as a function of C_{N_A} for the stall approach and for $M \approx 0.70$, 0.88, and 0.93. The c_n data were obtained by mechanical

integration of the chordwise pressure distributions. Two points of interest are the increase in slope of the c_n curves and the wing-section stall at the outboard sections. The increase in slope of the c_n curves may be attributed to the leading-edge-separation vortex, which, as previously mentioned, broadened the leading-edge-pressure peak. Because of the inboard movement of the vortex, the increase in slope occurred at higher values of C_{N_A} for the inboard wing sections. In addition the slope of the c_n curves for the outboard sections is greater than the slope of the inboard sections.

The wing-section stall is associated with the previously mentioned trailing-edge separation over the wing. The c_n curves and the pressure distributions show that the tip stalled first at $C_{N_A} \approx 0.2$ followed by the inboard wing sections at progressively higher values of C_{N_A} as the separated region moved inboard.

Section pitching moment.- Figure 17 shows the variation with C_{N_A} of the pitching-moment parameter at each orifice station for the stall approach and for Mach numbers of 0.70, 0.88, and 0.93. The pitching moment for each orifice station is presented about a line perpendicular to the plane of symmetry and passing through the quarter-chord point of the mean aerodynamic chord of the wing panel. The location of this line is shown on the drawing in figure 3. The leading-edge-separation vortex and the stall at each section noticeably affected the slope of the pitching-moment curves, therefore as a result the curves are nonlinear and vary with spanwise location. In general the slopes of the outboard sections became more stable after the formation of the leading-edge-separation vortex and less stable after wing-section separation. The reverse was true for the inboard sections.

Section center of pressure.- Figure 18 shows the effect of C_{N_A} on each of the wing-section center-of-pressure locations for the stall approach and for Mach numbers of 0.70 and 0.88. Because of the lack of data and the presence of the elevon actuator-fairing between $0.550b'/2$ and $0.848b'/2$ no fairing of the curves was attempted in this region. Figure 18 shows that during the stall approach the center-of-pressure movement was confined mostly to the region of the elevon-actuator fairing. As the Mach number increased, the center-of-pressure movement extended itself farther inboard until at $M \approx 0.88$ a change in the location of the center of pressure occurred inboard past orifice station $0.159b'/2$. The station near the fuselage showed no center-of-pressure movement with C_{N_A} at any Mach number. In general, movement occurring in the section center of pressure was to the rear.

Spanwise Distributions

Spanwise load distributions.- Figure 19 shows the effect of C_{N_A} on the spanwise load distributions for the stall approach and for Mach numbers of 0.70, 0.88, and 0.93. Effects of the elevon-actuator fairing and the elevon-horn junction between orifice stations 0.550b'/2 and 0.848b'/2 cannot be accurately determined, however the pressure distributions at station 0.550b'/2 show that the effects of the actuator are appreciable. An arbitrary fairing of the distributions is used. As a result the distributions were not integrated to obtain normal-force coefficient and lateral center of pressure. These characteristics, however, are presented in reference 2 from strain-gage measurements. A sample integration of these distributions compared favorably with the strain-gage data, indicating that the fairings used are reasonable.

At all Mach numbers presented, the effect of C_{N_A} on the spanwise load distributions is similar in that the load distributions tend to approach a triangular shape at high lift as a result of the inboard movement of separation. It may be noted also that the triangular distribution at high lift is roughly the envelope for the other distributions when $c_n(c/\bar{c})$ is used as the load parameter.

Spanwise pitching-moment distributions.- Figure 20 shows the effect of C_{N_A} on the spanwise pitching-moment distribution for the stall approach and for Mach numbers of 0.70, 0.88, and 0.93. As was noted with the spanwise load distributions, effects of the elevon-actuator fairing and the elevon-horn junction between orifice stations 0.550b'/2 and 0.848b'/2 cannot be accurately determined. Therefore, an arbitrary fairing of the distributions is used. This fairing is based on orifice stations 0b'/2 through 0.550b'/2 out to the elevon-horn junction and based on orifice station 0.848b'/2 over the elevon horn, which is at a different angle of attack relative to the fixed wing. As a result the distributions were not integrated to obtain pitching-moment coefficients and the resulting chordwise position of the center of pressure.

At all Mach numbers presented the pitching-moment parameter was positive over the inboard sections and negative over the outboard sections. As C_{N_A} increased, the inboard pitching moments became more positive and the outboard pitching moments became more negative.

Elevon-Section Loads

The pressure distributions in figures 4 to 8 indicate that the inboard movement of trailing-edge separation resulted in large changes in the load characteristics of the elevon. These changes are shown more clearly in the chordwise load distributions obtained from the pressure

distributions for the stall approach and for $M \approx 0.70$ and 0.88 (fig. 21). For each of these three conditions the elevon tip experienced an up-load at all values of C_{N_A} presented because of its positive angle of attack relative to the free stream. Inboard of the elevon-horn junction the elevon loads were negative at low C_{N_A} resulting from its upward deflection. However, figure 21 shows that the loads reversed from down-load to up-load outboard of the elevon midspan between $C_{N_A} = 0.3$ and 0.5. The pressure instrumentation was not designed to obtain the total loads and hinge moments of the elevon; however reference 13, which presents the results of strain-gage measurements, reports that an abrupt reversal in hinge moment occurred at Mach numbers of 0.70 and 0.88 at $C_{N_A} \approx 0.46$ and 0.51, respectively. The reversal in load was caused by the inboard movement from the wing tip of the separated region. In general the flow remained unseparated inboard of the midsemispan, although some possible separation at the fuselage may be noted during the stall approach at $C_{N_A} = 0.50$. It is readily seen that a full-span control on a delta wing is subjected to large twisting moments because of the great difference in flow characteristics between the outboard and inboard sections.

CONCLUDING REMARKS

The results of the pressure-distribution measurements over the delta wing of the Convair XF-92A airplane at Mach numbers up to 0.93 show that high leading-edge suction, followed by a leading-edge-separation vortex, resulted from the small leading-edge radius. The outboard wing sections experienced a higher effective angle of attack because of the high degree of taper and large degree of sweep. As a result the high leading-edge suction and the leading-edge-separation vortex occurred first at the wing tip and moved inboard with increasing angle of attack.

The critical Mach number of the wing decreased from 0.82 to 0.65 with an increase in airplane normal-force coefficient from 0.06 to 0.17.

The wing-section lift and pitching-moment curves were very nonlinear with angle of attack because of the large three-dimensional effects. The wing sections at the tip stalled at an airplane normal-force coefficient of about 0.20. The spanwise load distributions tended to approach a triangular shape at high lift as a result of the inboard movement of wing-section stall.

Wing-section stall resulted in a local reversal in the elevon-section load from down-load to up-load.

High-Speed Flight Station,
National Advisory Committee for Aeronautics,
Edwards, Calif., July 25, 1955.

REFERENCES

1. Keener, Earl R.: Wing Pressure Distributions at Low Lift for the XF-92A Delta-Wing Airplane at Transonic Speeds. NACA RM H54H06, 1954.

2. Kuhl, Albert E., and Johnson, Clinton T.: Flight Measurements of Wing Loads on the Convair XF-92A Delta-Wing Airplane. NACA RM H55D12, 1955.

3. Gracey, William, Letko, William, and Russell, Walter R.: Wind-Tunnel Investigation of a Number of Total-Pressure Tubes at High Angles of Attack - Subsonic Speeds. NACA TN 2331, 1951. (Supersedes NACA RM L50G19.)

4. Huston, Wilber B.: Accuracy of Airspeed Measurements and Flight Calibration Procedures. NACA Rep. 919, 1948. (Supersedes NACA TN 1605.)

5. Sisk, Thomas R., and Muhleman, Duane O.: Longitudinal Stability Characteristics in Maneuvering Flight of the Convair XF-92A Delta-Wing Airplane Including the Effects of Wing Fences. NACA RM H54J27, 1955.

6. Wilson, Herbert A., Jr., and Lovell, J. Calvin: Full-Scale Investigation of the Maximum Lift and Flow Characteristics of an Airplane Having Approximately Triangular Plan Form. NACA RM L6K20, 1947.

7. Anderson, Adrien E.: An Investigation at Low Speed of a Large-Scale Triangular Wing of Aspect Ratio Two. - II. The Effect of Airfoil Section Modifications and the Determination of the Wake Downwash. NACA RM A7H28, 1947.

8. Whittle, Edward F., Jr., and Lovell, J. Calvin: Full-Scale Investigation of an Equilateral Triangular Wing Having 10-Percent-Thick Biconvex Airfoil Sections. NACA RM L8G05, 1948.

9. Anderson, Adrien E.: Chordwise and Spanwise Loadings Measured at Low Speed on Large Triangular Wings. NACA RM A9B17, 1949.

10. May, Ralph W., Jr., and Hawes, John G.: Low-Speed Pressure-Distribution and Flow Investigation for a Large Pitch and Yaw Range of Three-Low-Aspect-Ratio Pointed Wings Having Leading Edge Swept Back 60° and Biconvex Sections. NACA RM L9J07, 1949.

11. Bird, John D., and Riley, Donald R.: Some Experiments on Visualization of Flow Fields Behind Low-Aspect-Ratio Wings by Means of a Tuft Grid. NACA TN 2674, 1952.

12. Baker, Thomas F., and Johnson, Wallace E.: Flight Measurements at Transonic Speeds of the Buffeting Characteristics of the XF-92A Delta-Wing Research Airplane. NACA RM H54L03, 1955.

13. Johnson, Clinton T., and Kuhl, Albert E.: Flight Measurements of Elevon Hinge Moments on the XF-92A Delta-Wing Airplane. NACA RM H54J25a, 1955.

TABLE I

PHYSICAL CHARACTERISTICS OF THE XF-92 AIRPLANE

Wing:	
Area, sq ft	425
Span, ft	31.33
Airfoil section	NACA $65_{(06)}$-006.5
Mean aerodynamic chord, ft	18.09
Aspect ratio	2.31
Root chord, ft	27.13
Tip chord	0
Taper ratio	0
Sweepback (leading edge), deg	60
Incidence, deg	0
Dihedral (chord plane), deg	0
Wing panel:	
Location (outboard of wing-semispan station 37 in., percent semispan),	19.7
Area (one panel), sq ft	137.1
Span (one panel), ft	12.58
Mean aerodynamic chord, ft	14.53
Average chord, ft	10.90
Elevons:	
Area (total of both elevons rearward of hinge line), sq ft	76.19
Span (one elevon), ft	13.35
Chord (rearward of hinge line, constant except at tip), ft	3.05
Movement, deg	
Elevator:	
Up	15
Down	5
Aileron, total	10
Operation	Hydraulic
Vertical tail:	
Area, sq ft	75.35
Height, above fuselage center line, ft	11.50
Rudder:	
Area, sq ft	15.53
Span, ft	9.22
Travel, deg	±8.5
Operation	Hydraulic
Fuselage:	
Length, ft	42.80
Power plant:	
Engine	Allison J33-A-29 with afterburner
Rating:	
Static thrust at sea level, lb	5,600
Static thrust at sea level with afterburner, lb	7,500
Weight:	
Gross weight (560 gal fuel), lb	15,560
Empty weight, lb	11,808
Center-of-gravity locations:	
Gross weight (560 gal fuel), percent M.A.C.	25.5
Empty weight, percent M.A.C.	29.2
Moment of inertia in pitch, slug-ft^2	35,000

TABLE II

PROFILE AND ORDINATES OF THE AIRFOIL SECTION

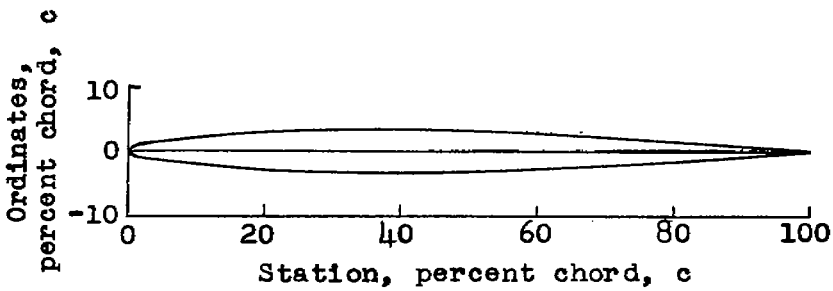

NACA 65(06)-006.5

[Stations and ordinates given in percent of airfoil chord]

Upper surface		Lower surface	
Station	Ordinate	Station	Ordinate
0	0	0	0
.50	.516	.50	-.516
.75	.622	.75	-.622
1.25	.777	1.25	-.777
2.5	1.036	2.5	-1.036
5.0	1.419	5.0	-1.419
7.5	1.721	7.5	-1.721
10	1.976	10	-1.976
15	2.380	15	-2.380
20	2.689	20	-2.689
25	2.922	25	-2.922
30	3.090	30	-3.090
35	3.198	35	-3.198
40	3.248	40	-3.248
45	3.232	45	-3.232
50	3.142	50	-3.142
55	2.969	55	-2.969
60	2.728	60	-2.728
65	2.433	65	-2.433
70	2.096	70	-2.096
75	1.727	75	-1.727
80	1.336	80	-1.336
85	.937	85	-.937
90	.552	90	-.552
95	.211	95	-.211
100	0	100	0
L. E. radius: 0.282			

TABLE III

CHORDWISE LOCATION OF STATIC-PRESSURE ORIFICES

[Percent of local chord]

Orifice	Chordwise station									
	Row A		Row B		Row C		Row D		Row E	
	Upper surface	Lower surface	Upper surface	Lower surface	Upper surface	Lower surface	Upper surface	Lower surface	Upper surface	Lower surface
1	0	----	0	----	0	----	0	----	0	----
2	2.5	2.5	2.5	2.5	5.0	5.0	2.5	----	10.0	10.0
3	5.0	5.0	5.0	5.0	9.0	9.0	5.8	5.8	20.0	20.0
4	7.5	7.5	9.3	9.3	15.0	15.0	10.0	10.0	35.0	35.0
5	10.0	10.0	11.8	----	20.0	20.0	20.4	20.4	51.3	51.3
6	12.5	12.5	15.0	15.0	29.7	29.7	30.0	30.0	80.0	80.0
7	15.0	15.0	19.5	19.5	40.0	40.0	40.0	40.0	95.0	95.0
8	20.0	20.0	25.2	25.2	50.0	50.0	50.0	50.0		
9	25.0	25.0	30.0	30.0	60.0	60.0	60.0	60.0		
10	30.9	30.9	40.5	40.5	70.0	70.0	65.0	65.0		
11	35.0	35.0	50.0	50.0	75.0	----	70.0	70.0		
12	40.0	40.0	59.1	59.1	80.0	80.0	80.0	80.0		
13	45.0	45.0	70.0	70.0	85.0	85.0	85.0	85.0		
14	50.0	50.0	80.0	80.0	95.0	95.0	95.0	95.0		
15	55.0	55.0	83.9	----						
16	60.0	60.0	90.0	90.0						
17	65.0	65.0	95.0	95.0						
18	70.0	70.0								
19	75.0	75.0								
20	83.0	83.0								
21	86.5	86.5								
22	90.0	90.0								
23	95.0	95.0								

TABLE IV

PRESSURE COEFFICIENTS AND AERODYNAMIC CHARACTERISTICS

OF THE CONVAIR XF-92A WING

[Stall approach]

(a) $M = 0.67$ $\alpha = 3.4^{\circ}$

$C_{N_A} = 0.11$ $\delta_{e_L} = 1.9^{\circ}$ up

Orifice	Pressure coefficients									
	Row A		Row B		Row C		Row D		Row E	
	Upper surface	Lower surface	Upper surface	Lower surface	Upper surface	Lower surface	Upper surface	Lower surface	Upper surface	Lower surface
1	0.194	-----	0.028	-----	-0.095	-----	-0.360	-----	-0.236	-----
2	-.201	0.169	-.254	0.152	-.307	0.116	-.448	-----	-.371	0.046
3	-.201	.134	-.236	.081	-.254	.098	-.378	0.099	-.307	-.042
4	-.148	.081	-.219	-.007	-.289	.046	-.307	.011	-.289	-.166
5	-.138	.046	-.201	-----	-.236	-.042	-.272	0	-.254	-.148
6	-.131	-.007	-.201	.027	-.307	-.078	-.289	-.061	-.095	-.025
7	-.148	.011	-.183	.028	-.272	-.081	-.354	-.067	.011	.011
8	-.131	-.007	-.219	-.060	-.254	-.113	-.236	-.166		
9	-.131	-.060	-.201	-.060	-.183	-.131	-.165	-.236		
10	-.131	.011	-.236	-.095	-.078	-.078	-.095	-.201		
11	-.166	.025	-.272	-.152	-.025	-----	-.025	-.289		
12	-.201	-.113	-.236	-.166	.011	-.131	-.025	-.078		
13	-.236	-.078	-.148	-.078	.011	-.060	-.007	-.025		
14	-.236	-.141	-.025	-.007	.064	.064	.081	.046		
15	-.201	-.159	.046	-----						
16	-.254	-.219	.011	.011						
17	-.219	-.201	.028	.098						
18	-.219	-.148								
19	-.148	-.078								
20	-.078	-.025								
21	-.049	-.113								
22	.011	-.007								
23	.039	.011								

Integrated section aerodynamic characteristics					
c_n	0.098	0.130	0.122	0.102	0.163
$c_{m_{c/4}}$	-.0013	-.0064	.0122	.0259	-.0061

TABLE IV.- Continued

PRESSURE COEFFICIENTS AND AERODYNAMIC CHARACTERISTICS

OF THE CONVAIR XF-92A WING

[Stall approach]

(b) $M = 0.58$ $\alpha = 4.8^{\circ}$
$C_{N_A} = 0.15$ $\delta_{e_L} = 2.3^{\circ}$ up

Orifice	Pressure coefficients									
	Row A		Row B		Row C		Row D		Row E	
	Upper surface	Lower surface	Upper surface	Lower surface	Upper surface	Lower surface	Upper surface	Lower surface	Upper surface	Lower surface
1	0.100	-----	-0.203	-----	-0.475	-----	-0.928	-----	-0.611	-----
2	-.294	0.204	-.408	0.226	-.430	0.158	-.702	-----	-.602	0.068
3	-.272	.158	-.317	.113	-.317	.091	-.521	0.136	-.385	.023
4	-.226	.136	-.294	.023	-.317	.068	-.408	.045	-.317	-.136
5	-.190	.091	-.249	-----	-.272	0	-.317	.032	-.272	-.113
6	-.204	.023	-.226	.068	-.317	-.045	-.317	-.036	-.113	-.023
7	-.181	.068	-.226	.045	-.272	-.091	-.226	-.077	-.023	0
8	-.181	.023	-.249	-.023	-.249	-.091	-.249	-.113		
9	-.158	-.023	-.204	-.023	-.204	-.113	-.158	-.226		
10	-.158	.068	-.249	-.068	-.091	-.068	-.091	-.181		
11	-.204	0	-.272	-.136	-.023	-----	0	-.294		
12	-.204	-.091	-.226	-.158	.023	-.136	-.023	-.091		
13	-.249	-.068	-.136	-.045	0	-.045	-.023	-.023		
14	-.249	-.127	-.023	-.023	.067	.045	.068	.045		
15	-.204	-.149	.068	-----						
16	-.249	-.204	.023	.023						
17	-.204	-.158	.023	.068						
18	-.226	-.136								
19	-.136	-.068								
20	-.045	-.045								
21	-.032	-.136								
22	.022	-.023								
23	.036	.045								

Integrated section aerodynamic characteristics					
c_n	0.134	0.150	0.170	0.153	0.243
$c_{m_{c/4}}$	-.0010	-.0003	.0128	.0272	-.0048

TABLE IV.- Continued

PRESSURE COEFFICIENTS AND AERODYNAMIC CHARACTERISTICS

OF THE CONVAIR XF-92A WING

[Stall approach]

(c) $M = 0.50$ $\alpha = 6.4^{\circ}$
$C_{N_A} = 0.20$ $\delta_{e_L} = 2.8^{\circ}$ up

Orifice	Pressure coefficients									
	Row A		Row B		Row C		Row D		Row E	
	Upper surface	Lower surface	Upper surface	Lower surface	Upper surface	Lower surface	Upper surface	Lower surface	Upper surface	Lower surface
1	-0.129	-----	-0.601	-----	-1.061	-----	-1.828	-----	-1.153	-----
2	-.386	0.227	-.601	0.227	-.601	0.166	-1.000	-----	-.895	0
3	-.356	.196	-.417	.166	-.448	.135	-.724	0.166	-.540	.074
4	-.233	.135	-.356	.104	-.386	.104	-.540	.104	-.386	-.110
5	-.245	.104	-.356	-----	-.325	.012	-.570	.086	-.294	-.080
6	-.233	.012	-.294	.043	-.356	-.049	-.386	-.055	-.141	-.018
7	-.233	.074	-.264	.074	-.325	-.080	-.233	-.031	-.049	-.018
8	-.202	.012	-.294	-.018	-.264	-.049	-.264	-.110		
9	-.233	-.018	-.233	-.018	-.202	-.110	-.233	-.202		
10	-.202	.074	-.233	-.049	-.080	-.049	-.110	-.172		
11	-.233	.012	-.264	-.141	-.018	-----	-.018	-.294		
12	-.202	-.110	-.233	-.172	.043	-.141	-.018	-.110		
13	-.233	-.080	-.110	-.080	-.008	-.049	-.018	-.018		
14	-.233	-.098	-.018	-.018	.104	.043	.043	.012		
15	-.202	-.129	.104	-----						
16	-.264	-.172	.012	-.018						
17	-.202	-.141	.012	.012						
18	-.233	-.110								
19	-.141	-.080								
20	-.049	-.018								
21	-.037	-.141								
22	.012	-.049								
23	.031	.043								

Integrated section aerodynamic characteristics					
c_n	0.158	0.174	0.222	0.230	0.340
$c_{m_{c/4}}$	-.0010	.0141	.0195	.0358	-.0096

TABLE IV.- Continued

PRESSURE COEFFICIENTS AND AERODYNAMIC CHARACTERISTICS

OF THE CONVAIR XF-92A WING

[Stall approach]

(d) $M = 0.42$ $\alpha = 9.6^{\circ}$
$C_{N_A} = 0.29$ $\delta_{e_L} = 4.0^{\circ}$ up

Orifice	Pressure coefficients									
	Row A		Row B		Row C		Row D		Row E	
	Upper surface	Lower surface	Upper surface	Lower surface	Upper surface	Lower surface	Upper surface	Lower surface	Upper surface	Lower surface
1	-0.568	-----	-1.447	-----	-2.394	-----	-3.772	-----	-1.361	-----
2	-.543	0.405	-.844	0.256	-.887	0.189	-1.662	-----	-.956	0
3	-.456	.319	-.586	.189	-.543	.189	-1.188	0.189	-.672	.103
4	-.370	.189	-.499	.146	-.499	.103	-.758	.146	-.456	-.069
5	-.344	.189	-.413	-----	-.370	.060	-.499	.121	-.241	-.026
6	-.327	.103	-.370	.146	-.413	-.026	-.456	-.078	-.155	-.026
7	-.327	.146	-.327	.146	-.370	.017	-.282	.043	-.112	-.069
8	-.284	.146	-.370	.017	-.284	.017	-.284	-.026		
9	-.241	.017	-.327	.017	-.198	-.069	-.198	-.198		
10	-.198	.146	-.241	-.026	-.112	-.026	-.112	-.155		
11	-.241	.060	-.284	-.069	-.112	-----	.017	-.327		
12	-.284	-.026	-.241	-.155	.103	-.155	-.026	-.069		
13	-.241	-.026	-.155	-.026	.017	-.026	-.026	-.026		
14	-.284	-.009	-.017	-.026	.060	.060	-.017	.017		
15	-.198	-.052	.103	-----						
16	-.241	-.155	.017	-.026						
17	-.241	-.069	.017	.017						
18	-.198	-.069								
19	-.155	-.026								
20	-.026	-.026								
21	.043	-.198								
22	.060	-.026								
23	.043	.017								

Integrated section aerodynamic characteristics					
c_n	0.240	0.254	0.322	0.316	0.389
$c_{m_{c/4}}$	.0038	.0144	.0173	.0410	-.0128

TABLE IV.- Continued

PRESSURE COEFFICIENTS AND AERODYNAMIC CHARACTERISTICS

OF THE CONVAIR XF-92A WING

[Stall approach]

(e) $M = 0.32$ $\alpha = 12.8^{\circ}$
$C_{N_A} = 0.42$ $\delta_{e_L} = 5.9^{\circ}$ up

Orifice	Pressure coefficients									
	Row A		Row B		Row C		Row D		Row E	
	Upper surface	Lower surface	Upper surface	Lower surface	Upper surface	Lower surface	Upper surface	Lower surface	Upper surface	Lower surface
1	-1.716	-----	-3.619	-----	-5.565	-----	-3.619	-----	-1.024	-----
2	-.879	0.418	-1.384	0.202	-1.528	0.202	-2.033	-----	-.995	0.130
3	-.735	.418	-.952	.274	-1.024	.274	-2.105	0.202	-.663	.130
4	-.591	.346	-.807	.202	-.735	.274	-2.177	.130	-.447	-.087
5	-.476	.274	-.735	-----	-.591	.202	-1.600	.231	-.231	-.014
6	-.519	.130	-.591	.202	-.663	.130	-.879	.159	-.303	-.086
7	-.447	.346	-.447	.202	-.447	.058	-.375	.101	-.303	-.231
8	-.375	.202	-.447	.058	-.447	-.014	-.375	-.014		
9	-.447	.130	-.375	.130	-.231	-.014	-.231	-.159		
10	-.303	.202	-.375	.058	-.087	-.014	-.087	-.159		
11	-.375	.130	-.375	-.086	-.014	-----	.058	-.447		
12	-.375	.058	-.303	-.086	.058	-.159	-.014	-.159		
13	-.375	.058	-.159	-.014	-.014	-.086	-.087	-.086		
14	-.375	.014	-.014	-.086	.058	.058	-.014	-.014		
15	-.231	.014	.130	-----						
16	-.303	-.159	.130	-.014						
17	-.303	-.086	.014	.058						
18	-.231	-.087								
19	-.159	-.014								
20	-.014	-.014								
21	.029	-.303								
22	.058	-.086								
23	.029	.130								

Integrated section aerodynamic characteristics					
c_n	0.384	0.388	0.512	0.680	0.425
$c_{m_{c/4}}$	.0045	.0234	.0291	.0733	-.0227

TABLE IV.- Continued

PRESSURE COEFFICIENTS AND AERODYNAMIC CHARACTERISTICS

OF THE CONVAIR XF-92A WING

[Stall approach]

(f) $M = 0.32$ $\alpha = 13.9^{\circ}$
$C_{N_A} = 0.44$ $\delta_{e_L} = 6.5^{\circ}$

Orifice	Pressure coefficients									
	Row A		Row B		Row C		Row D		Row E	
	Upper surface	Lower surface	Upper surface	Lower surface	Upper surface	Lower surface	Upper surface	Lower surface	Upper surface	Lower surface
1	-1.849	-----	-4.073	-----	-6.177	-----	-3.096	-----	-0.917	-----
2	-.992	0.436	-1.443	0.210	-1.743	0.210	-1.668	-----	-1.037	0.060
3	-.766	.436	-.992	.286	-1.067	.286	-1.743	0.210	-.616	.135
4	-.616	.361	-.766	.210	-.766	.286	-1.743	.135	-.391	-.090
5	-.496	.286	-.691	-----	-.616	,210	-1.593	.240	-.240	.060
6	-.541	.135	-.616	.210	-.541	.135	-1.368	.165	-.316	-.090
7	-.466	.361	-.466	.210	-.466	.060	-.691	.105	------	-.240
8	-.391	.210	-.466	.135	-.391	-.015	-.541	-.060		
9	-.391	.135	-.391	.135	-.240	-.015	-.316	-.165		
10	-.316	.135	-.391	.060	-.090	-.015	-.240	-.165		
11	-.391	.135	-.391	-.090	-.015	-----	-.015	-.466		
12	-.391	.060	-.316	-.090	.135	-.165	-.090	-.165		
13	-.391	.060	-.165	-.090	-.015	-.090	-.090	-.090		
14	-.391	.090	-.015	-.090	.024	.060	-.015	-.015		
15	-.240	.015	.135	-----						
16	-.316	-.165	.135	-.015						
17	-.316	-.015	.015	.060						
18	-.240	-.090								
19	-.165	.060								
20	-.015	-.015								
21	.105	-.316								
22	.060	-.090								
23	.030	.135								

Integrated section aerodynamic characteristics					
c_n	0.410	0.389	0.513	0.734	0.422
$c_{m_{c/4}}$	-.0022	.0282	.0339	.0384	-.0282

TABLE IV.- Concluded

PRESSURE COEFFICIENTS AND AERODYNAMIC CHARACTERISTICS

OF THE CONVAIR XF-92A WING

[Stall approach]

(g) $M = 0.30$ $\alpha = 15.7^{\circ}$
$C_{N_A} = 0.50$ $\delta_{e_L} = 6.5^{\circ}$ up

Orifice	Pressure coefficients									
	Row A		Row B		Row C		Row D		Row E	
	Upper surface	Lower surface	Upper surface	Lower surface	Upper surface	Lower surface	Upper surface	Lower surface	Upper surface	Lower surface
1	-2.335	-----	-5.044	-----	-5.287	-----	-2.206	-----	-0.827	-----
2	-1.070	0.470	-1.638	0.146	-2.206	0.227	-1.233	-----	-.957	0.146
3	-.908	.470	-1.314	.308	-2.449	.308	-1.233	0.227	-.665	.146
4	-.584	.389	-.908	.227	-2.125	.308	-1.314	.146	-.422	-.097
5	-.697	.308	-.746	-----	-.989	.227	-1.233	.259	-.259	.065
6	-.584	.146	-.665	.227	-.422	.146	-1.233	.178	-.341	-.097
7	-.503	.389	-.503	.227	-.341	.146	-.908	.195	-.341	-.259
8	-.422	.308	-.503	.146	-.341	.065	-.827	-.065		
9	-.422	.146	-.422	.146	-.259	-.016	-.665	-.178		
10	-.341	.308	-.341	.065	-.097	-.016	-.503	-.178		
11	-.422	.146	-.422	.065	-.016	-----	-.422	-.422		
12	-.422	.065	-.341	-.097	.146	-.178	-.259	-.178		
13	-.422	.146	-.178	-.097	-.016	-.097	-.341	-.097		
14	-.341	.097	-.016	-.016	.065	.065	-.259	-.097		
15	-.259	.016	.146	-----						
16	-.341	-.178	.227	-.097						
17	-.341	-.016	.016	.065						
18	-.259	-.097								
19	-.178	.136								
20	-.016	-.016								
21	.114	-.341								
22	.065	-.097								
23	.032	.136								

Integrated section aerodynamic characteristics					
c_n	0.462	0.442	0.687	0.789	0.447
$c_{m_{c/4}}$	-.0003	.0298	.0583	-.0394	-.0349

TABLE V

PRESSURE COEFFICIENTS AND AERODYNAMIC CHARACTERISTICS

OF THE CONVAIR XF-92A WING

[Wind-up turn; M = 0.72 to 0.65]

(a) $M = 0.72$ $\alpha = 4.2^{\circ}$
$C_{N_A} = 0.14$ $\delta_{e_L} = 2.4^{\circ}$ up

Orifice	Pressure coefficients									
	Row A		Row B		Row C		Row D		Row E	
	Upper surface	Lower surface	Upper surface	Lower surface	Upper surface	Lower surface	Upper surface	Lower surface	Upper surface	Lower surface
1	-0.147	-----	-0.120	-----	-0.422	-----	-0.853	-----	-0.431	-----
2	-.298	0.204	-.409	0.213	-.431	0.102	-.653	-----	-.498	0.058
3	-.253	.169	-.320	.102	-.320	.058	-.498	0.124	-.431	-.009
4	-.187	.124	-.298	.080	-.320	.027	-.431	.071	-.329	-.142
5	-.187	.102	-.231	-----	-.298	-.044	-.364	.036	-.320	-.142
6	-.187	.080	-.231	.036	-.364	-.098	-.364	0	-.120	-.031
7	-.164	.080	-.231	-----	-.298	-.098	-.298	-.040	.009	.013
8	-.187	.013	-.275	-----	-.275	-.142	-.275	-.164		
9	-.142	-.031	-.253	-.031	-.209	-.120	-.164	-.231		
10	-.187	.058	-.298	-.098	-.098	-.076	-.120	-.209		
11	-.209	-.009	-.320	-.187	-.031	-----	-.018	-.364		
12	-.231	-.098	-.275	-.187	.036	-.209	.004	-.098		
13	-.275	-.076	-.142	-.098	.022	-.053	-.009	-.031		
14	-.298	-----	-.053	-.053	.058	.035	.058	.036		
15	-.231	-.155	.080	-----						
16	-.298	-.187	.058	-.044						
17	-.240	-.164	.058	.058						
18	------	-----								
19	------	-----								
20	-.076	-.053								
21	-.040	-.120								
22	.013	-.053								
23	.058	.022								

Integrated section aerodynamic characteristics					
c_n	0.142	0.146	0.154	0.166	0.230
$c_{m_{c/4}}$	-.0016	.0083	.0157	.0352	-.0054

TABLE V.- Continued

PRESSURE COEFFICIENTS AND AERODYNAMIC CHARACTERISTICS

OF THE CONVAIR XF-92A WING

[Wind-up turn; M = 0.72 to 0.65]

(b) $M = 0.72$ $\alpha = 5.8^{\circ}$
$C_{N_A} = 0.21$ $\delta_{e_L} = 3.0^{\circ}$ up

Orifice	Pressure coefficients									
	Row A		Row B		Row C		Row D		Row E	
	Upper surface	Lower surface	Upper surface	Lower surface	Upper surface	Lower surface	Upper surface	Lower surface	Upper surface	Lower surface
1	-0.009	-----	-0.471	-----	-0.792	-----	-1.285	-----	-0.537	-----
2	-.405	0.268	-.559	0.233	-.559	0.167	-.911	-----	-.647	0.057
3	-.317	.211	-.383	.145	-.449	.123	-.779	0.145	-.647	-.009
4	-.273	.189	-.383	.145	-.405	.092	-.647	.092	-.392	-.119
5	-.273	.145	-.295	-----	-.383	0	-.493	.079	-.317	-.141
6	-.229	.101	-.295	.101	-.427	-.053	-.449	.022	-.141	-.053
7	-.229	.101	-.295	-----	-.361	-.075	-.361	.018	-.075	-.031
8	-.229	.057	-.317	-----	-.317	-.119	-.317	-.141		
9	-.207	-.009	-.295	-.009	-.229	-.119	-.163	-.229		
10	-.207	.101	-.317	-.053	-.119	-.097	-.119	-.229		
11	-.229	.013	-.361	-.141	-.031	-----	-.018	-.405		
12	-.273	-.075	-.295	-.185	.035	-.229	.004	-.119		
13	-.295	-.053	-.163	-.119	.022	-.053	-.009	-.053		
14	-.317	-----	-.053	.053	.057	.035	.035	.035		
15	-.273	-.154	.101	-----						
16	-.317	-.185	.057	-.066						
17	-.238	-.163	.057	.035						
18	------	-----								
19	------	-----								
20	-.097	-.075								
21	-.040	-.185								
22	.013	-.053								
23	.057	.022								

Integrated section aerodynamic characteristics					
c_n	0.186	0.190	0.216	0.242	0.296
$c_{m_{c/4}}$	.0026	.0147	.0224	.0400	-.0070

TABLE V.- Continued

PRESSURE COEFFICIENTS AND AERODYNAMIC CHARACTERISTICS

OF THE CONVAIR XF-92A WING

[Wind-up turn; M = 0.72 to 0.65]

(c) $M = 0.72$ $\alpha = 7.4^{\circ}$
$C_{N_A} = 0.28$ $\delta_{e_L} = 3.7^{\circ}$ up

Orifice	Pressure coefficients									
	Row A		Row B		Row C		Row D		Row E	
	Upper surface	Lower surface	Upper surface	Lower surface	Upper surface	Lower surface	Upper surface	Lower surface	Upper surface	Lower surface
1	-0.207	-----	-0.802	-----	-1.124	-----	-1.507	-----	-0.582	-----
2	-.516	0.313	-.736	0.256	-.780	0.189	-1.044	-----	-.648	0.079
3	-.427	.278	-.516	.167	-.692	.167	-1.022	0.189	-.670	.035
4	-.317	.234	-.471	.189	-.582	.137	-.956	.159	-.304	-.097
5	-.317	.189	-.383	-----	-.494	.066	-.648	.123	-.273	-.119
6	-.295	.167	-.361	.145	-.471	.013	-.516	.110	-.185	-.075
7	-.273	.167	-.339	-----	-.383	-.009	-.383	-.048	-.141	-.097
8	-.273	.079	-.361	-----	-.339	-.097	-.295	-.075		
9	-.207	.035	-.339	.013	-.229	-.097	-.185	-.207		
10	-.229	.123	-.361	-.031	-.097	-.053	-.119	-.229		
11	-.273	.057	-.361	-.119	-.031	-----	-.040	-.427		
12	-.295	-.031	-.295	-.163	.057	-.251	-.022	-.119		
13	-.295	-.009	-.163	-.075	.022	-.075	-.031	-.053		
14	-.361	-----	-.031	-.075	.079	.035	.013	.013		
15	-.273	-.088	.123	-----						
16	-.317	-.141	.079	-.044						
17	-.216	-.141	.057	.057						
18	------	-----								
19	------	-----								
20	-.075	-.053								
21	-.018	-.185								
22	.035	-.075								
23	.057	.022								

Integrated section aerodynamic characteristics					
c_n	0.233	0.250	0.290	0.346	0.298
$c_{m_{c/4}}$	-.0006	.0141	.0245	.0422	-.0045

TABLE V.- Continued

PRESSURE COEFFICIENTS AND AERODYNAMIC CHARACTERISTICS

OF THE CONVAIR XF-92A WING

[Wind-up turn; M = 0.72 to 0.65]

(d) $M = 0.72$ $\alpha = 8.1^{\circ}$
$C_{N_A} = 0.30$ $\delta_{e_L} = 3.9^{\circ}$ up

Orifice	Pressure coefficients									
	Row A		Row B		Row C		Row D		Row E	
	Upper surface	Lower surface	Upper surface	Lower surface	Upper surface	Lower surface	Upper surface	Lower surface	Upper surface	Lower surface
1	-0.296	-----	-0.935	-----	-1.279	-----	-1.442	-----	-0.604	-----
2	-.560	0.335	-.979	0.278	-.781	0.212	-1.023	-----	-.670	0.101
3	-.450	.278	-.538	.182	-.737	.168	-1.001	0.190	-.604	.035
4	-.340	.356	-.450	.190	-.648	.159	-.957	.181	-.260	-.097
5	-.340	.211	-.406	-----	-.560	.066	-.737	.146	-.273	-.141
6	-.340	.190	-.362	.168	-.538	.013	-.648	.049	-.185	-.075
7	-.273	.168	-.362	-----	-.406	.009	-.516	.049	-.141	-.097
8	-.296	.079	-.384	-----	-.362	.013	-.384	-.075		
9	-.251	.035	-.362	.057	-.229	-.075	-.207	-.185		
10	-.251	.146	-.362	.009	-.097	-.097	-.119	-.229		
11	-.273	.079	-.362	-.119	-.030	-----	-.084	-.450		
12	-.296	-.031	-.296	-.163	-.035	-.273	-.039	-.119		
13	-.340	-.031	-.163	-.075	.022	-.097	-.075	-.053		
14	-.340	-----	-.031	-.075	-.057	-.035	-.009	.013		
15	-.251	-.088	.124	-----						
16	-.318	-.119	.079	-.066						
17	-.282	-.141	.057	.035						
18	------	-----								
19	------	-----								
20	-.074	-.053								
21	.004	-.207								
22	.035	-.074								
23	.057	.022								

Integrated section aerodynamic characteristics					
c_n	0.246	0.266	0.334	0.393	0.264
$c_{m_{c/4}}$	.0035	.0202	.0208	.0288	.0035

TABLE V.- Continued

PRESSURE COEFFICIENTS AND AERODYNAMIC CHARACTERISTICS

OF THE CONVAIR XF-92A WING

[Wind-up turn; M = 0.72 to 0.65]

(e) $M = 0.72$ $\alpha = 9.1^{\circ}$
$C_{N_A} = 0.34$ $\delta_{e_L} = 4.8^{\circ}$ up

Orifice	Pressure coefficients									
	Row A		Row B		Row C		Row D		Row E	
	Upper surface	Lower surface	Upper surface	Lower surface	Upper surface	Lower surface	Upper surface	Lower surface	Upper surface	Lower surface
1	-0.478	-----	-1.148	-----	-1.429	-----	-1.348	-----	-0.545	-----
2	-.612	0.384	-1.259	0.304	-.924	0.237	-.947	-----	-.701	0.080
3	-.545	.348	-1.148	.237	-.880	.192	-.924	0.237	-.366	.013
4	-.433	.304	-.947	.214	-.947	.183	-.947	.205	-.263	-.122
5	-.388	.237	-.567	-----	-.902	.112	-.924	.147	-.232	-.143
6	-.388	.214	-.366	.192	-.813	.058	-.969	.112	-.143	-.098
7	-.366	.192	-.344	-----	-.522	.013	-.835	.071	-.143	-.098
8	-.366	.147	-.366	-----	-.344	-.076	-.746	-.076		
9	-.277	.080	-.366	.080	-.188	-.054	-.433	-.210		
10	-.277	.170	-.366	.036	-.031	-.076	-.366	-.254		
11	-.299	.103	-.366	-.098	.036	-----	-.219	-.500		
12	-.344	-.009	-.299	-.143	.125	-.299	-.040	-.143		
13	-.366	-.009	-.121	-.076	.089	-.098	-.009	-.076		
14	-.366	-----	-.009	-.076	.080	.036	.058	-.009		
15	-.277	-.067	.192	-----						
16	-.321	-.098	.080	-.067						
17	-.241	-.121	.080	.058						
18	------	-----								
19	------	-----								
20	-.054	-.054								
21	-.018	-.232								
22	.036	-.076								
23	.058	.022								

Integrated section aerodynamic characteristics					
c_n	0.292	0.323	0.406	0.558	0.229
$c_{m_{c/4}}$	.0032	.0330	.0432	.0102	.0058

TABLE V.- Continued

PRESSURE COEFFICIENTS AND AERODYNAMIC CHARACTERISTICS

OF THE CONVAIR XF-92A WING

[Wind-up turn; M = 0.72 to 0.65]

(f) $M = 0.71$ $\alpha = 10.2^{\circ}$
$C_{N_A} = 0.40$ $\delta_{e_L} = 5.0^{\circ}$ up

Orifice	Pressure coefficients									
	Row A		Row B		Row C		Row D		Row E	
	Upper surface	Lower surface	Upper surface	Lower surface	Upper surface	Lower surface	Upper surface	Lower surface	Upper surface	Lower surface
1	-0.642	-----	-1.344	-----	-1.425	-----	-1.366	-----	-0.394	-----
2	-.733	0.434	-1.208	0.353	-1.027	0.262	-.959	-----	-.484	0.104
3	-.612	.398	-1.163	.262	-1.004	.262	-.959	0.262	-.167	.014
4	-.484	.353	-1.208	.262	-1.072	.231	-.959	.186	-.131	-.100
5	-.439	.308	-1.095	-----	-1.118	.158	-.959	.217	-.167	-.145
6	-.439	.262	-.869	.239	-1.095	.104	-1.072	.158	-.145	-.100
7	-.395	.262	-.326	-----	-.778	.036	-1.050	.095	-.167	-.167
8	-.371	.196	-.326	-----	-.258	-.009	-1.050	-.009		
9	-.303	.127	-.326	.127	-.054	-.032	-.733	-.190		
10	-.303	.217	-.348	.081	.036	-.054	-.620	-.235		
11	-.326	.127	-.348	-.032	.104	-----	-.380	-.484		
12	-.348	.059	-.280	-.077	.195	-.281	-.063	-.145		
13	-.371	.081	-.100	-.032	.136	-.077	-.009	-.077		
14	-.371	-----	.036	-.077	.104	.059	.059	-.009		
15	-.280	.023	.217	-----						
16	-.326	-.054	.104	-.045						
17	-.222	-.077	.081	.081						
18	------	-----								
19	------	-----								
20	-.032	-.032								
21	-.004	-.235								
22	.059	-.077								
23	.081	.023								

Integrated section aerodynamic characteristics					
c_n	0.351	0.392	0.504	0.685	0.140
$c_{m_{c/4}}$	.0006	.0333	.0512	-.0147	.0122

TABLE V.- Continued

PRESSURE COEFFICIENTS AND AERODYNAMIC CHARACTERISTICS

OF THE CONVAIR XF-92A WING

[Wind-up turn; M = 0.72 to 0.65]

(g) $M = 0.70$ $\alpha = 13.6^{\circ}$
$C_{N_A} = 0.52$ $\delta_{e_L} = 5.3^{\circ}$ up

Orifice	Pressure coefficients									
	Row A		Row B		Row C		Row D		Row E	
	Upper surface	Lower surface	Upper surface	Lower surface	Upper surface	Lower surface	Upper surface	Lower surface	Upper surface	Lower surface
1	-0.962	-----	-1.728	-----	-1.696	-----	-1.426	-----	-0.520	-----
2	-1.403	0.539	-1.310	0.386	-1.171	0.293	-.567	-----	-.636	0.060
3	-.776	.502	-1.310	.316	-1.148	.293	-.520	0.293	-.497	.014
4	-.590	.479	-1.403	.362	-1.217	.307	-.497	.307	-.367	-.102
5	-.544	.409	-1.380	-----	-1.310	.232	-.451	.246	-.358	-.149
6	-.544	.386	-1.380	.316	-1.310	.153	-.636	.209	-.358	-.149
7	-.474	.362	-1.148	-----	-1.055	.033	-.660	.144	-.381	-.265
8	-.451	.293	-.729	-----	-.544	.014	-.706	.014		
9	-.358	.200	-.381	.200	-.520	.009	-.636	-.172		
10	-.334	.293	-.269	.153	-.520	-.056	-.613	-.242		
11	-.334	.223	-.311	.014	-.451	-----	-.599	-.543		
12	-.358	.107	-.218	-.056	-.358	-.334	-.483	-.172		
13	-.358	.107	-.218	-.009	-.302	-.149	-.497	-.149		
14	-.358	-----	-.149	-.079	-.172	-.032	-.404	-.172		
15	-.265	.023	.153	-----						
16	-.311	-.032	-.009	-.093						
17	-.228	-.032	-.009	.014						
18	------	-----								
19	------	-----								
20	-.125	-.056								
21	-.042	-.288								
22	-.032	-.102								
23	.037	0								

Integrated section aerodynamic characteristics					
c_n	0.450	0.552	0.813	0.560	0.326
$c_{m_{c/4}}$	.0042	.0275	-.0480	-.0771	-.0314

TABLE V.- Continued

PRESSURE COEFFICIENTS AND AERODYNAMIC CHARACTERISTICS

OF THE CONVAIR XF-92A WING

[Wind-up turn; M = 0.72 to 0.65]

(h) $M = 0.69$ $\alpha = 14.5^{\circ}$
$C_{N_A} = 0.54$ $\delta_{e_L} = 7.3^{\circ}$ up

Orifice	Pressure coefficients									
	Row A		Row B		Row C		Row D		Row E	
	Upper surface	Lower surface	Upper surface	Lower surface	Upper surface	Lower surface	Upper surface	Lower surface	Upper surface	Lower surface
1	-1.154	-----	-1.905	-----	-1.653	-----	-0.863	-----	-0.596	-----
2	-2.075	0.558	-1.372	0.349	-1.008	0.301	-.572	-----	-.669	0.010
3	-.742	.519	-1.396	.325	-.936	.301	-.645	0.252	-.475	-.014
4	-.693	.495	-1.518	.349	-1.033	.291	-.669	.242	-.388	-.160
5	-.572	.446	-1.493	-----	-.984	.213	-.693	.228	-.402	-.208
6	-.621	.398	-1.614	.325	-.887	.155	-.718	.189	-.354	-.184
7	-.524	.373	-1.420	-----	-.766	.082	-.669	.121	-.354	-.257
8	-.475	.276	-.766	-----	-.742	-.014	-.669	-.015		
9	-.378	.204	-.378	.204	-.645	-.039	-.596	-.208		
10	-.354	.301	-.233	.155	-.548	-.112	-.548	-.305		
11	-.354	.228	-.354	.010	-.451	-----	-.558	-.718		
12	-.330	.107	-.475	-.063	-.427	-.451	-.461	-.233		
13	-.354	.131	-.378	-.039	-.344	-.208	-.524	-.208		
14	-.378	-----	-.160	-.136	-.233	-.087	-.402	-.208		
15	-.305	.019	.179	-----						
16	-.402	-.014	.010	-.126						
17	-.364	-.063	.010	-.014						
18	------	-----								
19	------	-----								
20	-.160	-.087								
21	-.097	-.402								
22	-.039	-.136								
23	.034	-.053								

Integrated section aerodynamic characteristics					
c_n	0.511	0.623	0.700	0.563	0.303
$c_{m_{c/4}}$	.0013	.0266	-.0502	-.0557	-.0208

TABLE V.- Continued

PRESSURE COEFFICIENTS AND AERODYNAMIC CHARACTERISTICS

OF THE CONVAIR XF-92A WING

[Wind-up turn; M = 0.72 to 0.65]

(i) $M = 0.68$ $\alpha = 16.1^{\circ}$
$C_{N_A} = 0.61$ $\delta_{e_L} = 7.8^{\circ}$ up

Orifice	Pressure coefficients									
	Row A		Row B		Row C		Row D		Row E	
	Upper surface	Lower surface	Upper surface	Lower surface	Upper surface	Lower surface	Upper surface	Lower surface	Upper surface	Lower surface
1	-1.315	-----	-1.904	-----	-1.502	-----	-1.021	-----	-0.604	-----
2	-2.542	0.613	-1.512	0.353	-1.070	0.278	-.874	-----	-.653	0.034
3	-1.144	.574	-1.561	.353	-1.045	.304	-.874	0.252	-.407	-.015
4	-.874	.525	-1.708	.378	-1.045	.319	-.824	.270	-.368	-.113
5	-.677	.501	-2.076	-----	-1.094	.240	-.775	.255	-.334	-.162
6	-.653	.452	-2.076	.353	-1.021	.182	-.775	.216	-.334	-.186
7	-.579	.427	-1.561	-----	-.996	.133	-.702	.147	-.309	-.236
8	-.555	.353	-.898	-----	-.849	-.059	-.653	-.034		
9	-.432	.280	-.579	.255	-.653	.010	-.579	-.187		
10	-.407	.329	-.481	.182	-.555	-.064	-.555	-.285		
11	-.407	.255	-.555	.059	-.456	-----	-.564	-.702		
12	-.407	.157	-.383	-.015	-.407	-.456	-.496	-.236		
13	-.456	.182	-.211	-.015	-.373	-.211	-.530	-.211		
14	-.456	-----	-.064	-.113	-.285	-.113	-.407	-.211		
15	-.407	.044	.206	-----						
16	-.456	.010	.059	-.128						
17	-.344	-.015	.010	-.015						
18	------	-----								
19	------	-----								
20	-.113	-.088								
21	-.049	-.407								
22	-.015	-.137								
23	.034	-.054								

Integrated section aerodynamic characteristics					
c_n	0.600	0.727	0.802	0.622	0.288
$c_{m_{c/4}}$	.0090	.0362	-.0640	-.0547	-.0163

TABLE V.- Continued

PRESSURE COEFFICIENTS AND AERODYNAMIC CHARACTERISTICS

OF THE CONVAIR XF-92A WING

[Wind-up turn; M = 0.72 to 0.65]

(j) $M = 0.68$ $\alpha = 16.9^{\circ}$
$C_{N_A} = 0.66$ $\delta_{e_L} = 7.8^{\circ}$ up

Orifice	Pressure coefficients									
	Row A		Row B		Row C		Row D		Row E	
	Upper surface	Lower surface	Upper surface	Lower surface	Upper surface	Lower surface	Upper surface	Lower surface	Upper surface	Lower surface
1	-1.434	-----	-1.882	-----	-1.574	-----	-0.837	-----	-0.513	-----
2	-2.704	0.622	-1.608	0.359	-1.285	0.284	-.837	-----	-.538	0.010
3	-1.633	.608	-1.658	.383	-1.310	.209	-.812	0.284	-.413	-.015
4	-.986	.558	-1.907	.408	-1.235	.349	-.737	.299	-.398	-.115
5	-1.036	.508	-2.107	-----	-1.160	.244	-.737	.309	-.388	-.164
6	-.712	.458	-2.281	.408	-1.111	.209	-.762	.244	-.339	-.189
7	-.637	.408	-1.882	-----	-.986	.209	-.737	.199	-.364	-.264
8	-.588	.408	-1.086	-----	-.886	.085	-.613	.110		
9	-.463	.284	-.911	.259	-.762	-.035	-.637	-.164		
10	-.413	.383	-.588	.234	-.588	-.065	-.637	-.289		
11	-.463	.259	-.438	.085	-.488	-----	-.598	-.712		
12	-.463	.234	-.388	.010	-.438	-.364	-.498	-.214		
13	-.488	.085	-.289	-.015	-.403	-.189	-.538	-.189		
14	-.388	-----	-.115	-.115	-.413	-.115	-.463	-.239		
15	-.339	.095	.159	-----						
16	-.388	.035	.010	-.154						
17	-.349	-.015	.010	-.003						
18	------	-----								
19	------	-----								
20	-.115	-.065								
21	-.050	-.413								
22	-.040	-.139								
23	.035	-.055								

Integrated section aerodynamic characteristics					
c_n	0.637	0.823	0.902	0.646	0.270
$c_{m_{c/4}}$	.0202	.0310	-.0842	-.0634	-.0275

TABLE V.- Continued

PRESSURE COEFFICIENTS AND AERODYNAMIC CHARACTERISTICS

OF THE CONVAIR XF-92A WING

[Wind-up turn; M = 0.72 to 0.65]

(k) $M = 0.68$ $\alpha = 18.2^{\circ}$
$C_{N_A} = 0.70$ $\delta_{e_L} = 7.8^{\circ}$ up

Orifice	Pressure coefficients									
	Row A		Row B		Row C		Row D		Row E	
	Upper surface	Lower surface	Upper surface	Lower surface	Upper surface	Lower surface	Upper surface	Lower surface	Upper surface	Lower surface
1	-1.598	-----	-1.848	-----	-1.613	-----	-0.897	-----	-0.496	-----
2	-2.725	0.621	-1.648	0.331	-1.548	0.280	-.771	-----	-.496	0.030
3	-2.224	.631	-1.673	.356	-1.347	.331	-.746	0.280	-.446	.005
4	-1.147	.606	-2.024	.406	-1.347	.371	-.746	.296	-.381	-.120
5	-.872	.581	-1.974	-----	-1.222	.291	-.696	.306	-.396	-.170
6	-.771	.506	-1.823	.406	-1.122	.230	-.771	.240	-.371	-.195
7	-.671	.481	-1.873	-----	-.947	.155	-.771	.195	-.421	-.296
8	-.571	.406	-1.372	-----	-.897	.080	-.771	-.055		
9	-.446	.306	-1.222	.280	-.821	.030	-.646	-.145		
10	-.471	.456	-.646	.255	-.696	-.045	-.671	-.270		
11	-.521	.306	-.421	.105	-.596	-----	-.631	-.696		
12	-.546	.205	-.371	.030	-.546	-.471	-.556	-.245		
13	-.471	.230	-.421	.005	-.461	-.220	-.546	-.195		
14	-.421	-----	-.220	-.120	-.371	-.145	-.471	-.220		
15	-.321	.090	.080	-----						
16	-.371	.030	.045	-.135						
17	-.305	.005	-.020	-.020						
18	------	-----								
19	------	-----								
20	-.170	-.070								
21	-.030	-.421								
22	-.020	-.146								
23	.055	-.060								

Integrated section aerodynamic characteristics					
c_n	0.686	0.893	0.953	0.659	0.286
$c_{m_{c/4}}$	.0176	.0112	-.0781	-.0704	-.0339

TABLE V.- Concluded

PRESSURE COEFFICIENTS AND AERODYNAMIC CHARACTERISTICS

OF THE CONVAIR XF-92A WING

[Wind-up turn; M = 0.72 to 0.65]

(l) $M = 0.65$ $\alpha = 23.3^{\circ}$
$C_{N_A} = 0.90$ $\delta_{e_L} = 2.8^{\circ}$ up

Orifice	Pressure coefficients									
	Row A		Row B		Row C		Row D		Row E	
	Upper surface	Lower surface	Upper surface	Lower surface	Upper surface	Lower surface	Upper surface	Lower surface	Upper surface	Lower surface
1	-2.071	-----	-1.826	-----	-1.104	-----	-0.760	-----	-0.732	-----
2	-3.001	0.678	-1.662	0.333	-1.060	0.224	-.814	-----	-.760	0.033
3	-2.891	.743	-1.634	.361	-1.060	.333	-.814	0.197	-.568	.087
4	-2.373	.743	-1.689	.471	-1.033	.377	-.787	.295	-.497	.022
5	-2.017	.689	-1.716	-----	-1.060	.317	-.842	.306	-.541	-.077
6	-1.498	.607	-1.689	.470	-1.033	.279	-.814	.290	-.514	-.186
7	-1.060	.579	-1.498	-----	-.896	.197	-.787	.268	-.541	-.350
8	-.896	.497	-1.334	-----	-.869	.142	-.760	.142		
9	-.678	.388	-1.279	.361	-.787	.115	-.705	-.022		
10	-.623	.443	-1.033	.333	-.732	.033	-.705	-.076		
11	-.623	.361	-.842	.169	-.678	-----	-.689	-.295		
12	-.568	.279	-.732	.087	-.705	-.213	-.607	-.159		
13	-.568	.279	-.623	.115	-.667	-.131	-.650	-.186		
14	-.568	-----	-.486	.005	-.568	-.186	-.623	-.240		
15	-.514	.153	-.295	-----						
16	-.514	.115	-.350	-.066						
17	-.388	.087	-.322	-.049						
18	------	-----								
19	------	-----								
20	-.404	-.022								
21	-.279	-.213								
22	-.186	-.076								
23	-.131	-.038								

Integrated section aerodynamic characteristics					
c_n	1.018	1.154	0.950	0.797	0.482
$c_{m_{c/4}}$	-.0214	-.0982	-.1373	-.1184	-.0720

TABLE VI

PRESSURE COEFFICIENTS AND AERODYNAMIC CHARACTERISTICS

OF THE CONVAIR XF-92A WING

[Wind-up turn; M = 0.91 to 0.84]

(a) $M = 0.91$ $\alpha = 2.1^{\circ}$
$C_{N_A} = 0.07$ $\delta_{e_L} = 2.6^{\circ}$ up

Orifice	Pressure coefficients									
	Row A		Row B		Row C		Row D		Row E	
	Upper surface	Lower surface	Upper surface	Lower surface	Upper surface	Lower surface	Upper surface	Lower surface	Upper surface	Lower surface
1	0.313	-----	0.173	-----	0.068	-----	-0.061	------	-0.142	------
2	-.142	0.180	-.201	0.161	-.283	0.068	-.353	------	-.493	-0.142
3	-.103	.126	-.142	.068	-.189	-.002	-.353	-0.003	-.446	-.248
4	-.061	.114	-.189	.021	-.213	-.019	-.353	-.096	-.217	-.470
5	-.084	.079	-.119	-----	-.313	-.126	-.329	-.131	-.283	-.224
6	-.084	.021	-.142	.021	-.399	-.189	-.364	-.185	-.037	-.026
7	-.084	.033	-.142	-----	-.318	-.259	-.411	-.072	.079	.068
8	-.096	-.014	-.178	-----	-.423	-.376	-.540	-.201		
9	-.061	-.072	-.166	-.084	-.481	-.154	-.528	-.516		
10	-.096	.033	-.283	-.131	-.224	-.161	-.072	-.493		
11	-.107	-.002	-.318	-.353	.033	-----	.110	-.505		
12	-.178	-.119	-.434	-.446	.114	-.575	.063	-.084		
13	-.224	-.096	-.399	-.131	.068	-.061	.061	-.002		
14	-.318	-----	-.026	-.084	.126	.091	.126	.126		
15	-.178	-.231	.091	-----						
16	-.341	-.399	.068	-.037						
17	-.411	-.516	.091	.061						
18	-----	-----								
19	-----	-----								
20	-.154	-.079								
21	-.119	-.178								
22	-.026	-.037								
23	.044	.037								

Integrated section aerodynamic characteristics					
c_n	0.092	0.086	0.082	0.085	0.059
$c_{m_{c/4}}$	-.0109	.0058	.0285	.0349	.0093

TABLE VI.- Continued

PRESSURE COEFFICIENTS AND AERODYNAMIC CHARACTERISTICS

OF THE CONVAIR XF-92A WING

[Wind-up turn; M = 0.91 to 0.84]

(b) $M = 0.91$ $\alpha = 3.3^{\circ}$
$C_{N_A} = 0.12$ $\delta_{e_L} = 3.6^{\circ}$ up

Orifice	Pressure coefficients									
	Row A		Row B		Row C		Row D		Row E	
	Upper surface	Lower surface	Upper surface	Lower surface	Upper surface	Lower surface	Upper surface	Lower surface	Upper surface	Lower surface
1	0.256	-----	0.047	-----	-0.140	-----	-0.385	-----	-0.315	------
2	-.221	0.228	-.315	0.210	-.280	0.093	-.606	-----	-.676	-0.082
3	-.170	.163	-.245	.117	-.303	.035	-.455	0.047	-.524	-.221
4	-.117	.163	-.245	.070	-.256	-.030	-.466	-.023	-.238	-.490
5	-.128	.105	-.187	-----	-.357	-.077	-.420	-.058	-.268	-.198
6	-.128	.070	-.198	.047	-.431	-.152	-.420	-.089	-.058	-.035
7	-.105	.070	-.186	-----	-.361	-.221	-.431	-.058	.058	.058
8	-.140	.023	-.210	-----	-.455	-.291	-.583	-.163		
9	-.093	-.035	-.233	-.047	-.513	-.152	-.571	-.501		
10	-.128	.058	-.315	-.117	-.152	-.158	-.058	-.455		
11	-.140	.023	-.338	-.350	.047	-----	.135	-.524		
12	-.210	-.105	-.443	-.338	.128	-.606	.077	-.175		
13	-.245	-.082	-.408	-.140	.082	-.152	.075	-.035		
14	-.338	-----	0	.082	.128	.105	.128	.117		
15	-.221	-.205	.140	-----						
16	-.361	-.373	.082	-.070						
17	-.431	-.443	.093	.051						
18	-----	-----								
19	-----	-----								
20	-.152	-.089								
21	-.105	-.268								
22	-.023	-.070								
23	.058	.016								

Integrated section aerodynamic characteristics					
c_n	0.130	0.130	0.104	0.142	0.126
$c_{m_{c/4}}$	.0086	.0100	.0314	.0426	.0160

TABLE VI.- Continued

PRESSURE COEFFICIENTS AND AERODYNAMIC CHARACTERISTICS

OF THE CONVAIR XF-92A WING

[Wind-up turn; M = 0.91 to 0.84]

(c) $M = 0.91$ $\alpha = 4.9^{\circ}$
$C_{N_A} = 0.19$ $\delta_{e_L} = 4.3^{\circ}$ up

Orifice	Pressure coefficients									
	Row A		Row B		Row C		Row D		Row E	
	Upper surface	Lower surface	Upper surface	Lower surface	Upper surface	Lower surface	Upper surface	Lower surface	Upper surface	Lower surface
1	0.140	-----	-0.163	-----	-0.408	-----	-0.699	-----	-0.513	------
2	-.361	0.263	-.443	0.256	-.595	0.163	-.781	-----	-.793	-0.058
3	-.240	.210	-.326	.175	-.350	.105	-.653	0.128	-.618	-.187
4	-.186	.198	-.268	.105	-.373	.077	-.606	.070	-.529	-.490
5	-.186	.152	-.233	-----	-.392	-.030	-.513	.023	-.385	-.187
6	-.187	.105	-.245	.105	-.478	-.105	-.455	-.019	-.128	-.058
7	-.163	.117	-.221	-----	-.443	-.128	-.513	-.012	-.035	-.012
8	-.175	.058	-.245	-----	-.490	-.175	-.618	-.117		
9	-.128	.012	-.280	.012	-.536	-.128	-.431	-.455		
10	-.140	.093	-.338	-.082	-.110	-.135	-.047	-.210		
11	-.175	.058	-.373	-.303	.058	-----	.089	-.548		
12	-.245	-.058	-.466	-.315	.140	-.618	.042	-.385		
13	-.256	-.070	-.443	-.128	.093	-.443	.040	-.070		
14	-.350	-----	0	-.070	.128	.082	.105	.093		
15	-.245	-.159	.152	-----						
16	-.373	-.280	.105	-.047						
17	-.443	-.326	.105	.040						
18	-----	-----								
19	-----	-----								
20	-.140	-.100								
21	-.082	-.338								
22	0	-.105								
23	.070	.016								

Integrated section aerodynamic characteristics					
c_n	0.186	0.184	0.174	0.222	0.252
$c_{m_{c/4}}$	-.0090	.0058	.0442	.0518	-.0009

TABLE VI.- Continued

PRESSURE COEFFICIENTS AND AERODYNAMIC CHARACTERISTICS

OF THE CONVAIR XF-92A WING

[Wind-up turn; M = 0.91 to 0.84]

(d) $M = 0.91$ $\alpha = 5.8^{\circ}$
$C_{N_A} = 0.23$ $\delta_{e_L} = 4.6^{\circ}$ up

Orifice	Pressure coefficients									
	Row A		Row B		Row C		Row D		Row E	
	Upper surface	Lower surface	Upper surface	Lower surface	Upper surface	Lower surface	Upper surface	Lower surface	Upper surface	Lower surface
1	0.066	-----	-0.313	-----	-0.574	-----	-0.823	-----	-0.539	------
2	-.361	0.311	-.551	0.280	-.812	0.197	-.740	-----	-.729	-0.064
3	-.356	.268	-.396	.197	-.646	.138	-.729	0.161	-.610	-.183
4	-.242	.244	-.349	.149	-.456	.121	-.808	.090	-.472	-.467
5	-.218	.161	-.290	-----	-.403	.012	-.598	.043	-.396	-.206
6	-.218	.138	-.266	.126	-.503	-.064	-.600	.024	-.183	-.076
7	-.206	.138	-.242	-----	-.456	-.088	-.551	.007	-.112	-.064
8	-.206	.090	-.290	-----	-.503	-.123	-.598	-.088		
9	-.159	.031	-.313	.031	-.562	-.112	-.159	-.408		
10	-.171	.114	-.361	-.064	-.028	-.119	-.088	-.171		
11	-.206	.078	-.384	-.195	.066	-----	.002	-.586		
12	-.254	-.040	-.503	-.266	.126	-.657	-.009	-.408		
13	-.278	-.052	-.396	-.123	.066	-.527	-.012	-.100		
14	-.384	-----	.019	-.064	.114	.078	.066	.066		
15	-.278	-.131	.161	-----						
16	-.396	-.218	.102	-.100						
17	-.467	-.266	.102	.036						
18	-----	-----								
19	-----	-----								
20	-.123	-.095								
21	-.064	-.396								
22	.019	-.123								
23	.078	.012								

Integrated section aerodynamic characteristics					
c_n	0.221	0.216	0.237	0.266	0.243
$c_{m_{c/4}}$	-.0102	.0131	.0486	.0554	-.0067

TABLE VI.- Continued

PRESSURE COEFFICIENTS AND AERODYNAMIC CHARACTERISTICS

OF THE CONVAIR XF-92A WING

[Wind-up turn; M = 0.91 to 0.84]

(e) $M = 0.89$ $\alpha = 6.7^{\circ}$
$C_{N_A} = 0.27$ $\delta_{e_L} = 4.8^{\circ}$ up

Orifice	Pressure coefficients									
	Row A		Row B		Row C		Row D		Row E	
	Upper surface	Lower surface	Upper surface	Lower surface	Upper surface	Lower surface	Upper surface	Lower surface	Upper surface	Lower surface
1	-0.041	-----	-0.462	-----	-0.726	-----	-0.954	-----	-0.642	------
2	-.401	0.339	-.870	0.284	-.750	0.224	-.870	-----	-.822	-0.065
3	-.409	.272	-.474	.212	-.702	.163	-.858	0.175	-.654	-.173
4	-.269	.260	-.365	.151	-.606	.135	-.834	.127	-.490	-.317
5	-.257	.200	-.341	-----	-.613	.024	-.738	.079	-.389	-.221
6	-.269	.163	-.317	.139	-.594	-.029	-.738	.060	-.221	-.089
7	-.245	.151	-.305	-----	-.546	-.053	-.678	.043	-.197	-.101
8	-.245	.103	-.317	-----	-.594	-.113	-.534	-.065		
9	-.185	.043	-.341	.043	-.606	-.088	-.185	-.317		
10	-.209	.115	-.377	-.041	-.058	-.096	-.125	-.185		
11	-.221	.079	-.437	-.173	.043	-----	-.046	-.618		
12	-.293	-.041	-.522	-.245	.115	-.690	-.058	-.437		
13	-.305	-.029	-.329	-.113	.055	-.570	-.012	-.125		
14	-.401	-----	.007	-.065	.079	.055	.019	.055		
15	-.305	-.120	.163	-----						
16	-.425	-.197	.079	-.101						
17	-.498	-.245	.091	.024						
18	------	-----								
19	------	-----								
20	-.125	-.096								
21	-.065	-.449								
22	-.005	-.125								
23	.067	0								

Integrated section aerodynamic characteristics					
c_n	0.254	0.256	0.306	0.342	0.281
$c_{m_{c/4}}$	-.0134	.0138	.0416	.0445	-.0006

TABLE VI.- Continued

PRESSURE COEFFICIENTS AND AERODYNAMIC CHARACTERISTICS

OF THE CONVAIR XF-92A WING

[Wind-up turn; M = 0.91 to 0.84]

(f) $M = 0.88$ $\alpha = 7.2^{\circ}$
$C_{N_A} = 0.30$ $\delta_{e_L} = 5.0^{\circ}$ up

Orifice	Pressure coefficients									
	Row A		Row B		Row C		Row D		Row E	
	Upper surface	Lower surface	Upper surface	Lower surface	Upper surface	Lower surface	Upper surface	Lower surface	Upper surface	Lower surface
1	-0.105	-----	-0.593	-----	-0.825	-----	-1.069	-----	-0.617	------
2	-.447	0.354	-.971	0.298	-.886	0.224	-.934	-----	-.691	-0.056
3	-.490	.310	-.849	.224	-.886	.176	-.947	0.188	-.593	-.178
4	-.349	.285	-.581	.188	-.861	.159	-.983	.139	-.390	-.251
5	-.300	.200	-.398	-----	-.832	.034	-.813	.090	-.337	-.227
6	-.288	.176	-.325	.163	-.642	-.007	-.813	.071	-.227	-.129
7	-.300	.163	-.349	-----	-.483	-.032	-.688	.054	-.251	-.142
8	-.276	.127	-.349	-----	-.556	-.105	-.422	-.044		
9	-.215	.066	-.373	.054	-.617	-.081	-.215	-.251		
10	-.227	.139	-.410	-.032	-.044	-.100	-.190	-.202		
11	-.264	.102	-.483	-.166	.066	-----	-.122	-.654		
12	-.337	-.020	-.569	-.227	.151	-.727	-.098	-.483		
13	-.324	-.020	-.227	-.105	.066	-.569	-.124	-.142		
14	-.434	-----	.005	-.068	.102	.054	-.044	.017		
15	-.337	-.100	.188	-----						
16	-.434	-.178	.090	-.117						
17	-.532	-.227	.090	.010						
18	------	-----								
19	------	-----								
20	-.129	-.100								
21	-.068	-.483								
22	.005	-.142								
23	.066	-.015								

Integrated section aerodynamic characteristics					
c_n	0.285	0.300	0.353	0.390	0.242
$c_{m_{c/4}}$	-.0131	.0218	.0522	.0442	-.0077

TABLE VI.- Continued

PRESSURE COEFFICIENTS AND AERODYNAMIC CHARACTERISTICS

OF THE CONVAIR XF-92A WING

[Wind-up turn; M = 0.91 to 0.84]

(g) $M = 0.87$ $\alpha = 8.4^{\circ}$
$C_{N_A} = 0.35$ $\delta_{e_L} = 5.1^{\circ}$ up

Orifice	Pressure coefficients									
	Row A		Row B		Row C		Row D		Row E	
	Upper surface	Lower surface	Upper surface	Lower surface	Upper surface	Lower surface	Upper surface	Lower surface	Upper surface	Lower surface
1	-0.184	-----	-0.719	-----	-0.943	-----	-1.167	-----	-0.570	------
2	-.507	0.396	-1.042	0.326	-.980	0.239	-.930	-----	-.595	-0.035
3	-.540	.338	-.968	.251	-1.005	.201	-.943	0.214	-.420	-.159
4	-.420	.326	-.843	.214	-1.030	.184	-.980	.177	-.301	-.221
5	-.346	.264	-.731	-----	-1.075	.082	-.930	.127	-.308	-.234
6	-.321	.214	-.470	.189	-.756	.027	-1.005	.107	-.234	-.134
7	-.333	.201	-.321	-----	-.470	-.010	-.806	.077	-.221	-.172
8	-.308	.164	-.383	-----	-.557	-.072	-.607	-.022		
9	-.234	.102	-.371	.077	-.122	-.060	-.383	-.221		
10	-.246	.164	-.420	.002	-.015	-.080	-.346	-.197		
11	-.284	.127	-.520	-.122	.090	-----	-.251	-.669		
12	-.358	.015	-.582	-.197	.164	-.744	-.214	-.408		
13	-.358	.015	-.147	-.085	.090	-.483	-.216	-.134		
14	-.458	-----	.015	-.060	.090	.040	-.122	.002		
15	-.346	-.092	.226	-----						
16	-.433	-.147	.090	-.109						
17	-.545	-.184	.090	.007						
18	------	-----								
19	------	-----								
20	-.109	-.092								
21	-.060	-.495								
22	.015	-.147								
23	.077	-.005								

Integrated section aerodynamic characteristics					
c_n	0.318	0.342	0.366	0.549	0.187
$c_{m_{c/4}}$	-.0112	.0266	.0784	.0045	-.0016

TABLE VI.- Continued

PRESSURE COEFFICIENTS AND AERODYNAMIC CHARACTERISTICS

OF THE CONVAIR XF-92A WING

[Wind-up turn; M = 0.91 to 0.84]

(h) $M = 0.87$ $\alpha = 8.8^{\circ}$
$C_{N_A} = 0.37$ $\delta_{e_L} = 5.3^{\circ}$ up

Orifice	Pressure coefficients									
	Row A		Row B		Row C		Row D		Row E	
	Upper surface	Lower surface	Upper surface	Lower surface	Upper surface	Lower surface	Upper surface	Lower surface	Upper surface	Lower surface
1	-0.225	-----	-0.782	-----	-1.010	-----	-1.212	-----	-0.580	------
2	-.605	0.402	-1.086	0.332	-.959	0.243	-.984	-----	-.605	-0.023
3	-.562	.369	-1.022	.268	-.984	.215	-.997	0.230	-.377	-.137
4	-.440	.332	-.959	.218	-1.048	.200	-1.060	.192	-.268	-.200
5	-.364	.268	-.908	-----	-1.119	.096	-.984	.142	-.276	-.225
6	-.326	.218	-.655	.192	-.845	.040	-1.060	.121	-.238	-.149
7	-.364	.218	-.301	-----	-.630	.003	-.845	.091	-.263	-.187
8	-.326	.154	-.390	-----	-.580	-.061	-.706	-.010		
9	-.251	.116	-.390	.091	-.149	-.061	-.478	-.213		
10	-.263	.180	-.428	.015	-.015	-.081	-.390	-.200		
11	-.288	.142	-.491	-.111	.066	-----	-.268	-.706		
12	-.377	.028	-.592	-.187	.167	-.782	-.218	-.352		
13	-.377	.028	-.137	-.086	.091	-.352	-.233	-.111		
14	-.478	-----	.015	-.061	.078	.015	-.137	-.010		
15	-.364	-.056	.243	-----						
16	-.453	-.137	.091	-.111						
17	-.554	-.187	.078	.008						
18	------	-----								
19	------	-----								
20	-.086	-.094								
21	-.048	-.516								
22	.028	-.149								
23	.078	-.018								

Integrated section aerodynamic characteristics					
c_n	0.332	0.362	0.418	0.587	0.187
$c_{m_{c/4}}$	-.0083	.0320	.0643	.0054	.0019

TABLE VI.- Continued

PRESSURE COEFFICIENTS AND AERODYNAMIC CHARACTERISTICS

OF THE CONVAIR XF-92A WING

[Wind-up turn; M = 0.91 to 0.84]

(i) $M = 0.86$ $\alpha = 9.2^{\circ}$
$C_{N_A} = 0.38$ $\delta_{e_L} = 5.3^{\circ}$ up

Orifice	Pressure coefficients									
	Row A		Row B		Row C		Row D		Row E	
	Upper surface	Lower surface	Upper surface	Lower surface	Upper surface	Lower surface	Upper surface	Lower surface	Upper surface	Lower surface
1	-0.308	-----	-0.899	-----	-1.054	-----	-1.195	-----	-0.604	------
2	-.642	0.432	-1.118	0.321	-.925	0.244	-1.027	-----	-.642	-0.039
3	-.612	.373	-1.092	.257	-.925	.231	-1.054	0.231	-.360	-.116
4	-.488	.347	-1.092	.231	-.964	.200	-1.130	.193	-.262	-.193
5	-.385	.283	-1.092	-----	-1.048	.095	-1.092	.141	-.257	-.206
6	-.385	.231	-.889	.206	-.964	.038	-1.092	.134	-.231	-.154
7	-.385	.218	-.321	-----	-.848	.013	-.874	.090	-.218	-.193
8	-.360	.180	-.386	-----	-.745	-.051	-.771	0		
9	-.283	.128	-.386	.103	-.334	-.051	-.591	-.193		
10	-.283	.180	-.424	.026	-.090	-.085	-.501	-.218		
11	-.334	.103	-.488	-.090	.051	-----	-.403	-.720		
12	-.424	.026	-.604	-.167	.154	-.810	-.275	-.308		
13	-.385	.026	-.116	-.077	.103	-.244	-.290	-.116		
14	-.475	-----	.026	-.064	.090	.013	-.218	-.051		
15	-.386	-.046	-.244	-----						
16	-.475	-.116	.090	-.116						
17	-.553	-.167	.077	.005						
18	------	-----								
19	------	-----								
20	-.090	-.098								
21	-.039	-.527								
22	.039	-.141								
23	.064	-.033								

Integrated section aerodynamic characteristics					
c_n	0.370	0.380	0.515	0.675	0.179
$c_{m_{c/4}}$	-.0118	.0355	.0426	-.0234	.0042

TABLE VI.- Continued

PRESSURE COEFFICIENTS AND AERODYNAMIC CHARACTERISTICS

OF THE CONVAIR XF-92A WING

[Wind-up turn; M = 0.91 to 0.84]

(j) $M = 0.85$ $\alpha = 9.5^{\circ}$
$C_{N_A} = 0.41$ $\delta_{e_L} = 5.6^{\circ}$ up

Orifice	Pressure coefficients									
	Row A		Row B		Row C		Row D		Row E	
	Upper surface	Lower surface	Upper surface	Lower surface	Upper surface	Lower surface	Upper surface	Lower surface	Upper surface	Lower surface
1	-0.365	-----	-0.952	-----	-1.134	-----	-1.226	-----	-0.561	------
2	-.730	0.451	-1.134	0.352	-.952	0.261	-1.030	-----	-.600	-0.013
3	-.634	.404	-1.121	.300	-.991	.248	-1.056	0.248	-.274	-.091
4	-.574	.378	-1.134	.248	-1.017	.229	-1.134	.222	-.214	-.183
5	-.417	.313	-1.239	-----	-1.116	.123	-1.108	.170	-.222	-.209
6	-.391	.261	-1.134	.235	-1.030	.078	-1.108	.149	-.222	-.143
7	-.391	.261	-.404	-----	-.965	.039	-.913	.117	-.222	-.196
8	-.365	.209	-.391	-----	-.848	-.026	-.821	.026		
9	-.313	.143	-.404	.104	-.326	-.026	-.665	-.183		
10	-.313	.209	-.417	.052	.034	-.060	-.535	-.196		
11	-.339	.170	-.482	-.065	.170	-----	-.462	-.730		
12	-.430	.078	-.613	-.130	.274	-.821	-.292	-.300		
13	-.378	.052	-.104	-.052	.183	-.235	-.321	-.104		
14	-.482	-----	.039	-.052	.117	.013	-.274	-.052		
15	-.391	-.021	.274	-----						
16	-.496	-.104	.104	-.104						
17	-.535	-.143	.091	.005						
18	------	-----								
19	------	-----								
20	-.078	-.086								
21	-.013	-.535								
22	.052	-.143								
23	.065	-.021								

Integrated section aerodynamic characteristics					
c_n	0.389	0.430	0.530	0.719	0.154
$c_{m_{c/4}}$	-.0090	.0394	.0486	-.0326	.0045

TABLE VI.- Continued

PRESSURE COEFFICIENTS AND AERODYNAMIC CHARACTERISTICS

OF THE CONVAIR XF-92A WING

[Wind-up turn; M = 0.91 to 0.84]

(k) $M = 0.85$ $\alpha = 10.4^{\circ}$
$C_{N_A} = 0.45$ $\delta_{e_L} = 5.8^{\circ}$ up

Orifice	Pressure coefficients									
	Row A		Row B		Row C		Row D		Row E	
	Upper surface	Lower surface	Upper surface	Lower surface	Upper surface	Lower surface	Upper surface	Lower surface	Upper surface	Lower surface
1	-0.465	-----	-1.060	-----	-1.179	-----	-1.206	-----	-0.373	------
2	-.862	0.481	-1.153	0.354	-1.020	0.275	-1.086	-----	-.412	-0.042
3	-.671	.447	-1.192	.301	-1.073	.248	-1.087	0.249	-.214	-.122
4	-.597	.394	-1.140	.288	-1.153	.243	-1.179	.222	-.259	-.201
5	-.478	.341	-1.444	-----	-1.240	.148	-1.166	.196	-.293	-.241
6	-.439	.301	-1.325	.262	-1.153	.103	-1.113	.175	-.293	-.188
7	-.399	.288	-.862	-----	-1.113	.063	-.941	.143	-.307	-.241
8	-.412	.248	-.412	-----	-.954	-.003	-.888	.050		
9	-.320	.169	-.465	.130	-.333	-.016	-.690	-.174		
10	-.333	.248	-.439	.090	.037	-.050	-.545	-.188		
11	-.346	.196	-.518	-.029	.130	-----	-.471	-.756		
12	-.452	.090	-.624	-.108	.288	-.849	-.338	-.333		
13	-.439	.077	-.095	-.042	.169	-.280	-.368	-.122		
14	-.492	-----	.037	-.056	.037	-.029	-.346	-.095		
15	-.439	-.011	.275	-----						
16	-.531	-.069	.090	-.135						
17	-.465	-.122	.050	-.037						
18	------	-----								
19	------	-----								
20	-.082	-.090								
21	-.029	-.571								
22	.037	-.161								
23	.050	-.050								

Integrated section aerodynamic characteristics					
c_n	0.412	0.489	0.606	0.750	0.138
$c_{m_{c/4}}$	-.0032	.0406	.0451	-.0451	-.0109

TABLE VI.- Continued

PRESSURE COEFFICIENTS AND AERODYNAMIC CHARACTERISTICS

OF THE CONVAIR XF-92A WING

[Wind-up turn; M = 0.91 to 0.84]

(l) $M = 0.84$ $\alpha = 13.8^{\circ}$
$C_{N_A} = 0.56$ $\delta_{e_L} = 4.5^{\circ}$ up

Orifice	Pressure coefficients									
	Row A		Row B		Row C		Row D		Row E	
	Upper surface	Lower surface	Upper surface	Lower surface	Upper surface	Lower surface	Upper surface	Lower surface	Upper surface	Lower surface
1	-0.636	-----	-1.283	-----	-1.270	-----	-0.919	-----	-0.542	------
2	-1.512	0.571	-1.243	0.361	-1.081	0.294	-.704	-----	-.596	-0.084
3	-.940	.536	-1.323	.348	-1.027	.294	-.744	0.240	-.515	-.137
4	-.730	.496	-1.418	.321	-1.000	.302	-.771	.240	-.439	-.191
5	-.677	.442	-1.472	-----	-1.062	.205	-.811	.213	-.434	-.177
6	-.555	.388	-1.580	.334	-1.027	.159	-.852	.205	-.420	-.191
7	-.474	.361	-1.404	-----	-.973	.119	-.744	-.186	-.434	-.272
8	-.434	.321	-.771	-----	-.811	.024	-.690	.078		
9	-.326	.253	-.623	.213	-.650	.024	-.650	-.178		
10	-.394	.294	-.164	.146	-.547	-.051	-.609	-.205		
11	-.380	.253	-.394	.038	-.434	-----	-.561	-.784		
12	-.420	.159	-.434	-.043	-.272	-.879	-.507	-.380		
13	-.326	.132	-.394	-.016	-.272	-.501	-.536	-.151		
14	-.340	-----	-.218	-.057	-.259	-.097	-.488	-.151		
15	-.340	.043	.105	-----						
16	-.407	-.016	-.084	-.191						
17	-.353	-.084	-.084	-.065						
18	------	-----								
19	------	-----								
20	-.272	-.078								
21	-.205	-.690								
22	-.151	-.218								
23	-.084	-.092								

Integrated section aerodynamic characteristics					
c_n	0.513	0.638	0.734	0.638	0.303
$c_{m_{c/4}}$	-.0093	.0141	-.0352	-.0682	-.0522

TABLE VI.- Concluded

PRESSURE COEFFICIENTS AND AERODYNAMIC CHARACTERISTICS

OF THE CONVAIR XF-92A WING

[Wind-up turn; M = 0.91 to 0.84]

(m) $M = 0.84$ $\alpha = 14.9^{\circ}$
$C_{N_A} = 0.65$ $\delta_{e_L} = 2.2^{\circ}$ up

Orifice	Pressure coefficients									
	Row A		Row B		Row C		Row D		Row E	
	Upper surface	Lower surface	Upper surface	Lower surface	Upper surface	Lower surface	Upper surface	Lower surface	Upper surface	Lower surface
1	-0.696	-----	-1.349	-----	-1.200	-----	-0.792	-----	-0.615	------
2	-1.662	0.577	-1.240	0.337	-1.104	0.269	-.615	-----	-.560	-0.092
3	-1.194	.555	-1.336	.351	-.996	.283	-.601	0.256	-.479	.106
4	-.805	.528	-1.472	.324	-1.132	.305	-.642	.256	-.498	-.030
5	-.683	.460	-1.526	-----	-1.113	.284	-.778	.242	-.465	-.275
6	-.560	.419	-1.689	.324	-1.023	.174	-.914	.234	-.424	-.098
7	-.479	.392	-1.513	-----	-.914	.133	-.819	.215	-.465	-.248
8	-.465	.337	-.900	-----	-.928	.065	-.778	.161		
9	-.356	.256	-.724	.229	-.805	.024	-.628	-.098		
10	-.370	.296	-.384	.161	-.647	.042	-.656	-.044		
11	-.343	.256	-.397	.065	-.533	-----	-.607	-.370		
12	-.492	.188	-.492	-.003	-.479	-.533	-.539	-.057		
13	-.520	.147	-.384	.052	-.397	-.180	-.569	-.071		
14	-.411	-----	-.288	-.092	-.288	-.071	-.506	-.112		
15	-.383	.071	-.071	-----						
16	-.397	.011	-.125	-.044						
17	-.506	-.057	-.057	-.011						
18	------	-----								
19	------	-----								
20	-.329	-.024								
21	--.248	-.397								
22	-.166	-.098								
23	-.098	-.011								

Integrated section aerodynamic characteristics					
c_n	0.605	0.731	0.830	0.750	0.343
$c_{m_{c/4}}$	-.0368	-.0134	-.0736	-.1226	-.0637

TABLE VII

PRESSURE COEFFICIENTS AND AERODYNAMIC CHARACTERISTICS

OF THE CONVAIR XF-92A WING

[M ≈ 0.76]

(a) $M = 0.76$ $\alpha = 1.8^{\circ}$
$C_{N_A} = 0.10$ $\delta_{e_L} = 1.6^{\circ}$ up

Orifice	Pressure coefficients									
	Row A		Row B		Row C		Row D		Row E	
	Upper surface	Lower surface	Upper surface	Lower surface	Upper surface	Lower surface	Upper surface	Lower surface	Upper surface	Lower surface
1	0.242	-----	0.079	-----	-0.044	-----	-0.248	-----	-0.152	-----
2	-.179	0.155	-.248	0.133	-.288	0.065	-.411	-----	-.343	0.011
3	-.160	.106	-.193	.065	-.247	.011	-.370	0.079	-.302	-.071
4	-.139	.106	-.193	.041	-.275	-.003	-.329	-.008	-.275	-.180
5	-.125	.057	-.180	-----	-.275	-.092	-.302	-.030	-.302	-.193
6	-.122	.024	-.193	.024	-.316	-.125	-.316	-.049	-.098	-.044
7	-.125	.011	-.180	.024	-.275	-.139	-.288	-.092	.024	.024
8	-.126	-.038	-.220	-.057	-.288	-.166	-.248	-.193		
9	-.112	-.071	-.207	-.071	-.193	-.152	-.166	-.261		
10	-.139	.011	-.261	-.125	-.098	-.112	-.098	-.248		
11	-.166	-.030	-.288	-.207	-.030	-----	-.003	-.356		
12	-.207	-.112	-.275	-.248	.011	-.180	-.008	-.071		
13	-.248	-.112	-.152	-.125	.011	-.084	.079	-.030		
14	-.261	-.193	-.044	-.057	.065	.052	.065	.065		
15	-.220	-.180	.052	-----						
16	-.288	-.248	.011	-.024						
17	-.261	-.220	.052	.038						
18	-.261	-.166								
19	-.180	-.112								
20	-.044	-.030								
21	-.022	-.098								
22	.024	-.030								
23	.038	.016								

Integrated section aerodynamic characteristics					
c_n	0.083	0.093	0.095	0.090	0.150
$c_{m_{c/4}}$	.0000	.0099	.0116	.0365	-.0042

TABLE VII.- Continued

PRESSURE COEFFICIENTS AND AERODYNAMIC CHARACTERISTICS

OF THE CONVAIR XF-92A WING

[M ≈ 0.76]

(b) $M = 0.76$ $\alpha = 7.8^{\circ}$
$C_{N_A} = 0.30$ $\delta_{e_L} = 4.5^{\circ}$ up

Orifice	Pressure coefficients									
	Row A		Row B		Row C		Row D		Row E	
	Upper surface	Lower surface	Upper surface	Lower surface	Upper surface	Lower surface	Upper surface	Lower surface	Upper surface	Lower surface
1	-0.235	-----	-0.781	-----	-1.150	-----	-1.347	-----	-0.508	-----
2	-.550	0.344	-1.054	0.290	-.781	0.227	-.991	-----	-.592	0.101
3	-.445	.311	-.550	.227	-.718	.206	-1.012	0.227	-.487	.017
4	-.319	.290	-.445	.206	-.655	.155	-.928	.197	-.222	-.130
5	-.319	.227	-.340	-----	-.592	.088	-.718	.164	-.256	-.130
6	-.319	.206	-.361	.164	-.466	.017	-.676	.109	-.172	-.067
7	-.277	.185	-.340	-----	-.445	-.004	-.466	.050	-.130	-.088
8	-.298	.122	-.361	-----	-.361	-.038	-.445	-.067		
9	-.235	.059	-.319	.059	-.235	-.067	-.172	-.151		
10	-.235	.164	-.340	.004	-.088	-.088	-.109	-.235		
11	-.256	.101	-.361	-.088	-.004	-----	-.034	-.550		
12	-.298	-.004	-.298	-.151	-.080	-.298	-.013	-.172		
13	-.340	-.004	-.130	-.088	-.067	-.088	-.046	-.046		
14	-.340	-----	-.004	-.067	-.080	-.059	.017	.017		
15	-.256	-.080	.164	-----						
16	-.319	-.130	.101	-.080						
17	-.243	-.193	.080	-.038						
18	------	-----								
19	------	-----								
20	-.046	-.067								
21	.029	-.197								
22	.059	-.067								
23	.080	.046								

Integrated section aerodynamic characteristics					
c_n	0.235	0.250	0.340	0.373	0.241
$c_{m_{c/4}}$	.0115	.0307	.0154	.0413	-.0099

TABLE VII.- Continued

PRESSURE COEFFICIENTS AND AERODYNAMIC CHARACTERISTICS

OF THE CONVAIR XF-92A WING

[M ≈ 0.76]

(c) $M = 0.74$ $\alpha = 13.4^{\circ}$
$C_{N_A} = 0.51$ $\delta_{e_L} = 5.8^{\circ}$ up

Orifice	Pressure coefficients									
	Row A		Row B		Row C		Row D		Row E	
	Upper surface	Lower surface	Upper surface	Lower surface	Upper surface	Lower surface	Upper surface	Lower surface	Upper surface	Lower surface
1	-0.874	-----	-1.561	-----	-1.526	-----	-0.940	------	-0.519	-----
2	-1.606	0.492	-1.273	0.368	-1.095	0.257	-.563	------	-.608	0.035
3	-.807	.457	-1.295	.302	-1.140	.302	-.585	0.279	-.563	-.009
4	-.674	.457	-1.495	.346	-1.229	.293	-.519	.293	-.395	-.142
5	-.563	.390	-1.561	-----	-1.295	.200	-.519	.235	-.408	-.120
6	-.541	.368	-1.583	.302	-1.184	.124	-.718	.200	-.364	-.164
7	-.497	.346	-1.339	-----	-.985	.058	-.718	.115	-.386	-.226
8	-.452	.257	-.652	-----	-.652	.013	-.718	-.009		
9	-.364	.191	-.430	.191	-.608	-.031	-.630	-.208		
10	-.342	.257	-.297	.146	-.585	-.075	-.630	-.275		
11	-.364	.213	-.275	-.009	-.475	-----	-.665	-1.118		
12	-.364	.107	-.253	-.075	-.364	-.386	-.483	-.231		
13	-.408	.102	-.275	-.053	-.288	-.164	-.497	-.164		
14	-.386	-----	-.164	-.098	-.164	-.075	-.386	-.186		
15	-.275	.022	.169	-----						
16	-.319	-.053	-.031	-.111						
17	-.284	-.075	-.009	-.009						
18	------	-----								
19	------	-----								
20	-.142	-.075								
21	-.062	-.342								
22	-.031	-.120								
23	.013	-.022								

Integrated section aerodynamic characteristics					
c_n	0.458	0.557	0.796	0.527	0.332
$c_{m_{c/4}}$	.0058	.0389	-.0483	-.0544	-.0410

[redacted]

TABLE VII.- Continued

PRESSURE COEFFICIENTS AND AERODYNAMIC CHARACTERISTICS

OF THE CONVAIR XF-92A WING

[M ≈ 0.76]

(d) $M = 0.76$ $\alpha = 16.5^{\circ}$
$C_{N_A} = 0.64$ $\delta_{e_L} = 7.4^{\circ}$ up

Orifice	Pressure coefficients									
	Row A		Row B		Row C		Row D		Row E	
	Upper surface	Lower surface	Upper surface	Lower surface	Upper surface	Lower surface	Upper surface	Lower surface	Upper surface	Lower surface
1	-1.059	-----	-1.606	-----	-1.278	-----	-0.899	------	-0.557	-----
2	-2.040	0.621	-1.424	0.379	-1.082	0.288	-.808	------	-.602	0.014
3	-1.743	.607	-1.401	.378	-1.059	.333	-.808	0.242	-.443	-.009
4	-1.150	.539	-1.857	.402	-1.059	.347	-.739	.278	-.383	-.123
5	-.790	.493	-1.766	-----	-1.036	.274	-.717	.288	-.374	-.169
6	-.602	.470	-1.812	.356	-.990	.219	-.762	.251	-.351	-.169
7	-.648	.402	-1.766	-----	-.899	.173	-.762	.187	-.374	-.260
8	-.625	.379	-1.241	-----	-.808	-.059	-.694	-.059		
9	-.465	.310	-.876	.265	-.717	-.014	-.580	-.146		
10	-.420	.356	-.488	.196	-.580	-.055	-.580	-.237		
11	-.397	.288	-.557	.082	-.511	-----	-.475	-1.104		
12	-.420	.173	-.443	-.032	-.511	-.671	-.497	-.237		
13	-.443	.196	-.283	.014	-.434	-.192	-.511	-.169		
14	-.443	-----	-.146	-.100	-.351	-.123	-.443	-.214		
15	-.397	.068	.128	-----						
16	-.443	.036	.032	-.160						
17	-.361	-.009	.032	-.055						
18	------	-----								
19	------	-----								
20	-.169	-.100								
21	-.064	-.488								
22	-.009	-.146								
23	.014	-.068								

Integrated section aerodynamic characteristics					
c_n	0.624	0.789	0.801	0.614	0.272
$c_{m_{c/4}}$	.0099	.0266	-.0691	-.0515	-.0307

TABLE VII.- Concluded

PRESSURE COEFFICIENTS AND AERODYNAMIC CHARACTERISTICS

OF THE CONVAIR XF-92A WING

[M ≈ 0.76]

(e) $M = 0.76$ $\alpha = 16.5^{\circ}$
$C_{N_A} = 0.68$ $\delta_{e_L} = 6.5^{\circ}$ up

Orifice	Pressure coefficients									
	Row A		Row B		Row C		Row D		Row E	
	Upper surface	Lower surface	Upper surface	Lower surface	Upper surface	Lower surface	Upper surface	Lower surface	Upper surface	Lower surface
1	-1.096	-----	-1.704	-----	-1.260	-----	-0.839	------	-0.559	-----
2	-2.078	0.633	-1.376	0.400	-1.143	0.306	-.769	------	-.605	0.049
3	-2.007	.633	-1.447	.400	-1.073	.353	-.769	0.330	-.488	.026
4	-1.447	.587	-1.820	.400	-1.073	.390	-.746	.306	-.418	-.115
5	-.979	.563	-1.797	-----	-1.049	.283	-.722	.306	-.418	-.138
6	-.792	.516	-1.704	.423	-1.003	.236	-.769	.269	-.372	-.161
7	-.582	.446	-1.774	.400	-.909	.166	-.746	.189	-.395	-.255
8	-.512	.423	-1.400	.283	-.839	.096	-.675	.096		
9	-.442	.330	-1.143	.282	-.746	.049	-.629	-.138		
10	-.395	.353	-.699	.236	-.652	-.068	-.605	-.208		
11	-.395	.283	-.535	-.096	-.582	-----	-.582	-1.073		
12	-.465	.213	-.488	-.026	-.559	-.652	-.535	-.208		
13	-.465	.213	-.372	-.026	-.488	-.208	-.559	-.161		
14	-.418	.143	-.278	-.091	-.418	-.138	-.465	-.208		
15	-.372	.096	.026	-----						
16	-.418	.049	-.115	-.161						
17	-.372	-.021	-.068	.096						
18	------	.002								
19	------	-.063								
20	-.231	-.068								
21	-.091	-.442								
22	-.021	-.161								
23	.002	.044								

Integrated section aerodynamic characteristics					
c_n	0.684	0.899	0.858	0.654	0.332
$c_{m_{c/4}}$	-.0006	-.0083	-.0838	-.0643	-.0410

TABLE VIII

PRESSURE COEFFICIENTS AND AERODYNAMIC CHARACTERISTICS

OF THE CONVAIR XF-92A WING

[M ≈ 0.82]

(a) $M = 0.82$ $\alpha = 1.1^{\circ}$

$C_{N_A} = 0.08$ $\delta_{e_L} = 1.6^{\circ}$ up

Orifice	Pressure coefficients									
	Row A		Row B		Row C		Row D		Row E	
	Upper surface	Lower surface	Upper surface	Lower surface	Upper surface	Lower surface	Upper surface	Lower surface	Upper surface	Lower surface
1	0.290	-----	0.153	-----	0.035	-----	-0.092	-----	-0.053	------
2	-.151	0.149	-.229	0.104	-.259	0.055	-.337	-----	-.327	-0.033
3	-.137	.094	-.171	.055	-.229	-.024	-.327	0.045	-.269	-.131
4	-.102	.084	-.180	.016	-.269	-.024	-.318	-.047	-.259	-.229
5	-.112	.049	-.151	-----	-.269	-.118	-.300	-.063	-.298	-.220
6	-.102	.016	-.171	.006	-.347	-.151	-.337	-.067	-.092	-.053
7	-.112	.006	-.161	.025	-.308	-.171	-.308	-.098	.045	.045
8	-.102	-.059	-.210	-.082	-.327	-.190	-.269	-.220		
9	-.082	-.082	-.200	-.082	-.229	-.180	-.170	-.298		
10	-.122	.016	-.278	-.161	-.102	-.131	-.112	-.269		
11	-.151	-.033	-.327	-.249	-.033	-----	.006	-.474		
12	-.210	-.131	-.308	-.269	.025	-.210	-.018	-.082		
13	-.259	-.122	-.190	-.112	.016	-.082	.065	-.024		
14	-.278	-.220	-.043	-.063	.074	.065	.084	.074		
15	-.220	-.210	.065	-----						
16	-.337	-.278	.025	-.020						
17	-.308	-.269	.065	.045						
18	-.308	-.200								
19	-.210	-.131								
20	-.053	-.043								
21	-.018	-.112								
22	.035	-.024								
23	.055	.020								

Integrated section aerodynamic characteristics					
c_n	0.073	0.083	0.093	0.074	0.109
$c_{m_{c/4}}$	-.0006	.0010	.0150	.0368	-.0003

TABLE VIII.- Continued

PRESSURE COEFFICIENTS AND AERODYNAMIC CHARACTERISTICS

OF THE CONVAIR XF-92A WING

[M ≈ 0.82]

(b) M = 0.82 $\alpha = 5.0^{\circ}$
$C_{N_A} = 0.18$ $\delta_{e_L} = 2.8^{\circ}$ up

Orifice	Pressure coefficients									
	Row A		Row B		Row C		Row D		Row E	
	Upper surface	Lower surface	Upper surface	Lower surface	Upper surface	Lower surface	Upper surface	Lower surface	Upper surface	Lower surface
1	0.092	-----	-0.236	-----	-0.608	-----	-0.914	-----	-0.455	-----
2	-.346	0.245	-.455	0.267	-.499	0.114	-.870	-----	-.608	0.070
3	-.280	.201	-.324	.171	-.389	.092	-.739	0.136	-.452	-.018
4	-.192	.201	-.346	.114	-.367	.092	-.542	.070	-.499	-.171
5	-.214	.136	-.280	-----	-.389	.004	-.411	.035	-.389	-.149
6	-.192	.092	-.280	.092	-.499	-.061	-.455	-.018	-.149	-.039
7	-.192	.092	-.258	.092	-.389	-.083	-.389	-.039	-.039	-.018
8	-.171	.070	-.280	-.017	-.367	-.105	-.302	-.127		
9	-.149	.004	-.280	.004	-.258	-.127	-.149	-.289		
10	-.192	.092	-.324	-.039	-.105	-.127	-.083	-.236		
11	-.192	.026	-.411	-.171	.004	-----	.026	-.586		
12	-.267	-.083	-.346	-.214	.070	-.280	.004	-.083		
13	-.302	-.061	-.170	-.105	.026	-.061	.004	-.018		
14	-.324	-.149	-.018	-.105	.092	.061	.070	.092		
15	-.280	-.162	.092	-----						
16	-.367	-.192	.048	-.039						
17	-.302	-.214	.070	.048						
18	-----	-.171								
19	-----	-.127								
20	-.105	-.061								
21	-.039	-.171								
22	.048	.004								
23	.070	.026								

Integrated section aerodynamic characteristics					
c_n	0.173	0.181	0.203	0.192	0.295
$c_{m_{c/4}}$	-.0022	.0272	.0192	.0419	-.0186

TABLE VIII.- Continued

PRESSURE COEFFICIENTS AND AERODYNAMIC CHARACTERISTICS

OF THE CONVAIR XF-92A WING

[M ≈ 0.82]

(c) $M = 0.82$ $\alpha = 7.2^{\circ}$
$C_{N_A} = 0.30$ $\delta_{e_L} = 4.2^{\circ}$ up

Orifice	Pressure coefficients									
	Row A		Row B		Row C		Row D		Row E	
	Upper surface	Lower surface	Upper surface	Lower surface	Upper surface	Lower surface	Upper surface	Lower surface	Upper surface	Lower surface
1	-0.159	-----	-0.715	-----	-1.005	-----	-1.232	-----	-0.497	-----
2	-.477	0.310	-1.073	0.278	-.775	0.199	-1.013	-----	-.596	0.040
3	-.437	.298	-.795	.179	-.735	.159	-1.013	0.179	-.556	-.040
4	-.338	.278	-.417	.179	-.715	.151	-.993	.131	-.246	-.139
5	-.298	.218	-.318	-----	-.675	.048	-.695	.139	-.278	-.159
6	-.318	.199	-.338	.139	-.655	0	-.695	.087	-.218	-.079
7	-.278	.179	-.338	-----	-.516	-.020	-.536	.052	-.179	-.119
8	-.298	.119	-.397	-----	-.397	-.079	-.417	-.060		
9	-.298	.040	-.358	.040	-.238	-.079	-.179	-.218		
10	-.218	.199	-.477	0	-.099	-.159	-.159	-.218		
11	-.278	.079	-.497	-.139	0	-----	-.048	-.775		
12	-.318	-.040	-.358	-.179	-.060	-.397	-.028	-.139		
13	-.358	0	-.159	-.060	.048	-.179	-.040	-.060		
14	-.397	-----	-.020	-.079	-.079	-.060	0	.020		
15	-.298	-.111	.159	-----						
16	-.417	-.139	.079	-.072						
17	-.306	-.139	.079	.040						
18	------	-----								
19	------	-----								
20	-.079	-.060								
21	-.068	-.258								
22	.020	-.099								
23	.060	.008								

Integrated section aerodynamic characteristics					
c_n	0.255	0.294	0.339	0.376	0.235
$c_{m_{c/4}}$	-.0019	.0195	.0304	.0413	.0102

TABLE VIII.- Continued

PRESSURE COEFFICIENTS AND AERODYNAMIC CHARACTERISTICS

OF THE CONVAIR XF-92A WING

[M ≈ 0.82]

(d) $M = 0.82$ $\alpha = 9.9^{\circ}$
$C_{N_A} = 0.40$ $\delta_{e_L} = 4.5^{\circ}$ up

Pressure coefficients										
Orifice	Row A		Row B		Row C		Row D		Row E	
	Upper surface	Lower surface	Upper surface	Lower surface	Upper surface	Lower surface	Upper surface	Lower surface	Upper surface	Lower surface
1	-0.402	-----	-1.025	-----	-0.856	-----	-1.267	-----	-0.543	-----
2	-.623	0.545	-1.086	0.322	-.865	0.201	-1.066	-----	-.623	0.020
3	-.643	.362	-1.066	.261	-.905	.241	-1.046	0.201	-.402	0
4	-.462	.342	-1.186	.261	-.965	.213	-1.086	.193	-.249	-.141
5	-.442	.281	-1.126	-----	-.985	.088	-1.066	.161	-.221	-.161
6	-.422	.261	-.965	.201	-1.005	.040	-1.126	.149	-.201	-.121
7	-.382	.241	-.422	-----	-.844	.020	-.965	.072	-.201	-.161
8	-.382	.161	-.402	-----	-.623	-.060	-.885	-.040		
9	-.302	.101	-.382	.101	-.322	-.060	-.563	-.201		
10	-.322	.201	-.442	.020	-.040	-.080	-.664	-.241		
11	-.362	.121	-.543	-.080	.080	-----	-.511	-.784		
12	-.402	.020	-.362	-.121	.201	-.402	-.310	-.161		
13	-.422	.040	-.141	-.060	.149	-.101	-.221	-.101		
14	-.483	-----	0	-.080	.101	.020	-.141	-.060		
15	-.322	-.052	0	-----						
16	-.462	-.101	.080	-.092						
17	-.310	-.141	.060	.020						
18	------	-----								
19	------	-----								
20	-.101	-.080								
21	-.048	-.302								
22	0	-.080								
23	.040	-.010								

Integrated section aerodynamic characteristics					
c_n	0.348	0.424	0.476	0.686	0.196
$c_{m_{c/4}}$	-.0035	.0269	.0301	-.0291	.0006

TABLE VIII.- Continued

PRESSURE COEFFICIENTS AND AERODYNAMIC CHARACTERISTICS

OF THE CONVAIR XF-92A WING

[M ≈ 0.82]

(e) $M = 0.80$ $\alpha = 12.5^{\circ}$
$C_{N_A} = 0.48$ $\delta_{e_L} = 5.4^{\circ}$ up

Orifice	Pressure coefficients									
	Row A		Row B		Row C		Row D		Row E	
	Upper surface	Lower surface	Upper surface	Lower surface	Upper surface	Lower surface	Upper surface	Lower surface	Upper surface	Lower surface
1	-0.651	-----	-1.298	-----	-1.348	-----	-1.131	-----	-0.338	------
2	-1.340	0.488	-1.152	0.372	-1.027	0.246	-.985	-----	-.422	-0.004
3	-.735	.455	-1.215	.288	-1.110	.267	-.943	0.267	-.380	-.046
4	-.630	.434	-1.298	.309	-1.215	.259	-.881	.238	-.326	-.171
5	-.505	.392	-1.549	-----	-1.236	.171	-.881	.246	-.338	-.213
6	-.526	.351	-1.444	.288	-1.152	.121	-.881	.171	-.338	-.192
7	-.463	.309	-1.173	-----	-1.006	.058	-.756	.134	-.338	-.276
8	-.442	.246	-.547	-----	-.776	-.004	-.651	-.004		
9	-.359	.184	-.484	.163	-.129	-.046	-.714	-.192		
10	-.359	.267	-.401	.100	-.088	-.067	-.547	-.234		
11	-.346	.184	-.380	-.004	-.046	-----	-.601	-.881		
12	-.422	.100	-.213	-.088	.079	-.568	-.409	-.213		
13	-.442	.100	-.109	-.046	-.004	-.171	-.442	-.150		
14	-.463	-----	-.046	-.109	-.150	-.067	-.422	-.192		
15	-.317	.004	.225	-----						
16	-.338	-.046	-.004	-.121						
17	-.242	-.088	-.025	-.004						
18	------	-----								
19	------	-----								
20	-.109	-.088								
21	-.075	-.359								
22	-.004	-.129								
23	.017	-.038								

Integrated section aerodynamic characteristics					
c_n	0.418	0.501	0.626	0.648	0.197
$c_{m_{c/4}}$	.0115	.0435	.0243	-.0614	-.0221

TABLE VIII.- Continued

PRESSURE COEFFICIENTS AND AERODYNAMIC CHARACTERISTICS

OF THE CONVAIR XF-92A WING

[M ≈ 0.82]

(f) $M = 0.81$ $\alpha = 12.9^{\circ}$
$C_{N_A} = 0.51$ $\delta_{e_L} = 4.5^{\circ}$ up

Orifice	Pressure coefficients									
	Row A		Row B		Row C		Row D		Row E	
	Upper surface	Lower surface	Upper surface	Lower surface	Upper surface	Lower surface	Upper surface	Lower surface	Upper surface	Lower surface
1	-0.649	-----	-1.263	-----	-1.350	-----	-0.803	-----	-0.519	-----
2	-1.503	0.532	-1.131	0.379	-1.044	0.269	-.497	-----	-.825	0.050
3	-.694	.488	-1.175	.335	-1.109	.291	-.453	0.313	-.540	.007
4	-.497	.444	-1.284	.313	-1.153	.282	-.431	.269	-.431	-.125
5	-.540	.400	-1.525	-----	-1.241	.182	-.519	.247	-.409	-.147
6	-.497	.379	-1.481	.313	-1.044	.138	-.694	.190	-.387	-.168
7	-.475	.313	-1.284	.291	-.759	.094	-.694	.160	-.387	-.256
8	-.409	.291	-.628	.182	-.672	.028	-.716	.028		
9	-.344	.225	-.562	.182	-.584	-.015	-.628	-.147		
10	-.344	.269	-.278	.138	-.540	-.081	-.628	-.212		
11	-.344	.204	-.250	-.007	-.475	-----	-.584	-.759		
12	-.387	.138	-.256	-.059	-.387	-.453	-.519	-.168		
13	-.387	.116	-.300	-.037	-.344	-.168	-.540	-.125		
14	-.344	.028	-.278	-.081	-.256	-.081	-.453	-.168		
15	-.278	.028	.072	-----						
16	-.300	-.037	-.103	-.103						
17	-.278	-.081	-.037	-.015						
18	------	-.059								
19	------	-.094								
20	-.256	-.059								
21	-.168	-.322								
22	-.103	-.125								
23	-.037	-.015								

Integrated section aerodynamic characteristics					
c_n	0.467	0.564	0.755	0.576	0.366
$c_{m_{c/4}}$	-.0099	.0176	-.0538	-.0170	-.0362

TABLE VIII.- Continued

PRESSURE COEFFICIENTS AND AERODYNAMIC CHARACTERISTICS

OF THE CONVAIR XF-92A WING

[M ≈ 0.82]

(g) $M = 0.82$ $\alpha = 12.1^{\circ}$
$C_{N_A} = 0.51$ $\delta_{e_L} = 3.8^{\circ}$ up

Orifice	Pressure coefficients									
	Row A		Row B		Row C		Row D		Row E	
	Upper surface	Lower surface	Upper surface	Lower surface	Upper surface	Lower surface	Upper surface	Lower surface	Upper surface	Lower surface
1	-0.567	-----	-1.276	-----	-1.393	-----	-0.813	-----	-0.499	-----
2	-1.317	0.509	-1.208	0.373	-1.058	0.316	-0.654	-----	-.562	0.032
3	-.676	.455	-1.243	.319	-1.099	.278	-.644	0.305	-.458	-.036
4	-.676	.428	-1.276	.305	-1.208	.278	-.635	.278	-.363	-.145
5	-.513	.373	-1.671	-----	-1.257	.196	-.649	.215	-.404	-.186
6	-.458	.332	-1.480	.291	-1.003	.141	-.649	.182	-.376	-.186
7	-.472	.319	-1.276	.278	-.799	.101	-.635	.141	-.390	-.281
8	-.417	.250	-.581	.169	-.663	.019	-.622	.027		
9	-.349	.210	-.581	.182	-.485	-.022	-.567	-.186		
10	-.322	.250	-.445	.128	-.417	-.090	-.567	-.213		
11	-.363	.210	-.499	-.022	-.417	-----	-.540	-.758		
12	-.417	.101	-.186	-.077	-.254	-.731	-.485	-.172		
13	-.404	.101	-.240	-.049	-.267	-.186	-.485	-.131		
14	-.376	.019	-.213	-.077	-.267	-.090	-.445	-.172		
15	-.295	.011	.101	-----						
16	-.308	-.049	-.117	-.098						
17	-.246	-.090	-.077	-.044						
18	------	-.063								
19	------	-.090								
20	-.213	-.077								
21	-.077	-.336								
22	-.049	-.104								
23	-.036	-.063								

Integrated section aerodynamic characteristics					
c_n	0.438	0.586	0.723	0.571	0.283
$c_{m_{c/4}}$	-.0013	.0218	-.0330	-.0611	-.0298

TABLE VIII.- Concluded

PRESSURE COEFFICIENTS AND AERODYNAMIC CHARACTERISTICS

OF THE CONVAIR XF-92A WING

[M ≈ 0.82]

(h) $M = 0.83$ $\alpha = 14.9^{\circ}$
$C_{N_A} = 0.65$ $\delta_{e_L} = 2.2^{\circ}$ up

Orifice	Pressure coefficients									
	Row A		Row B		Row C		Row D		Row E	
	Upper surface	Lower surface	Upper surface	Lower surface	Upper surface	Lower surface	Upper surface	Lower surface	Upper surface	Lower surface
1	-0.696	-----	-1.349	-----	-1.200	-----	-0.792	-----	-0.615	------
2	-1.662	0.557	-1.240	0.337	-1.104	0.269	-.615	-----	-.560	-0.092
3	-1.194	.555	-1.336	.351	-.996	.283	-.601	0.256	-.479	.106
4	-.805	.528	-1.472	.324	-1.132	.305	-.642	.256	-.498	-.030
5	-.683	.460	-1.526	-----	-1.113	.284	-.778	.242	-.465	-.275
6	-.560	.419	-1.689	.324	-1.023	.174	-.914	.234	-.424	-.098
7	-.479	.392	-1.513	-----	-.914	.133	-.819	.215	-.465	-.248
8	-.465	.337	-.900	-----	-.928	.065	-.778	.161		
9	-.356	.256	-.724	.229	-.805	.024	-.628	-.098		
10	-.370	.296	-.384	.161	-.647	.042	-.656	-.044		
11	-.343	.256	-.397	.065	-.533	-----	-.607	-.370		
12	-.492	.188	-.492	-.003	-.479	-.533	-.539	-.057		
13	-.520	.147	-.384	.052	-.397	-.180	-.569	-.071		
14	-.411	-----	-.288	-.092	-.288	-.071	-.506	-.112		
15	-.383	.071	-.071	-----						
16	-.397	.011	-.125	-.044						
17	-.506	-.057	-.057	-.011						
18	------	-----								
19	------	-----								
20	-.329	-.024								
21	-.248	-.397								
22	-.166	-.098								
23	-.098	-.011								

Integrated section aerodynamic characteristics					
c_n	0.605	0.731	0.830	0.750	0.343
$c_{m_{c/4}}$	-.0368	-.0134	-.0736	-.1226	-.0637

TABLE IX

PRESSURE COEFFICIENTS AND AERODYNAMIC CHARACTERISTICS

OF THE CONVAIR XF-92A WING

[M = 0.88]

(a) $M = 0.88$ $\alpha = 3.1^{\circ}$
$C_{N_A} = 0.10$ $\delta_{e_L} = 2.3^{\circ}$ up

Orifice	Pressure coefficients									
	Row A		Row B		Row C		Row D		Row E	
	Upper surface	Lower surface	Upper surface	Lower surface	Upper surface	Lower surface	Upper surface	Lower surface	Upper surface	Lower surface
1	0.287	-----	0.139	-----	-0.026	-----	-0.190	-----	-0.190	-----
2	-.174	0.188	-.256	0.172	-.355	0.073	-.355	-----	-.438	0.008
3	-.141	.123	-.158	.090	-.240	.024	-.438	0.057	-.339	-.125
4	-.092	.123	-.190	.024	-.240	.001	-.405	-.026	-.306	-.223
5	-.108	.090	-.158	-----	-.273	-.092	-.322	-.042	-.306	-.190
6	-.108	.057	-.158	.024	-.355	-.158	-.405	-.085	-.059	-.009
7	-.092	.024	-.158	.024	-.306	-.190	-.438	-.075	.073	.073
8	-.092	-.009	-.190	-.092	-.471	-.207	-.569	-.207		
9	-.059	-.059	-.190	-.092	-.454	-.174	-.108	-.569		
10	-.108	.024	-.273	-.141	-.059	-.158	-.059	-.158		
11	-.125	-.026	-.372	-.388	.024	-----	.073	-.536		
12	-.190	-.125	-.421	-.355	.090	-.405	.040	-.075		
13	-.223	-.092	-.240	-.141	.073	-.059	.057	.007		
14	-.273	-.190	-.042	-.075	.123	.073	.156	.106		
15	-.174	-.207	.106	-----						
16	-.388	-.322	.090	-.009						
17	-.388	-.306	.106	.090						
18	-----	-.190								
19	-----	-.167								
20	-.092	-.042								
21	-.026	-.125								
22	.057	.007								
23	.090	.090								

Integrated section aerodynamic characteristics					
c_n	0.085	0.077	0.102	0.099	0.149
$c_{m_{c/4}}$	-.0038	.0102	.0218	.0362	-.0006

TABLE IX.- Continued

PRESSURE COEFFICIENTS AND AERODYNAMIC CHARACTERISTICS

OF THE CONVAIR XF-92A WING

[M = 0.88]

(b) $M = 0.88$ $\alpha = 5.0^{\circ}$
$C_{N_A} = 0.20$ $\delta_{e_L} = 4.0^{\circ}$ up

Orifice	Pressure coefficients									
	Row A		Row B		Row C		Row D		Row E	
	Upper surface	Lower surface	Upper surface	Lower surface	Upper surface	Lower surface	Upper surface	Lower surface	Upper surface	Lower surface
1	0.119	-----	-0.243	-----	-0.538	-----	-0.801	-----	-0.505	------
2	-.325	0.283	-.473	0.267	-.637	0.168	-.801	-----	-.768	-0.012
3	-.275	.218	-.341	.168	-.456	.119	-.752	0.168	-.538	-.128
4	-.210	.201	-.358	.119	-.390	.112	-.653	.086	-.522	-.193
5	-.193	.168	-.259	-----	-.390	-.012	-.538	.053	-.374	-.177
6	-.193	.135	-.259	.119	-.489	-.078	-.538	.027	-.144	-.045
7	-.177	.103	-.243	.119	-.407	-.095	-.538	.004	-.045	-.012
8	-.160	.070	-.259	-.012	-.522	-.128	-.653	-.128		
9	-.128	.020	-.275	-.012	-.555	-.128	-.095	-.637		
10	-.160	.086	-.358	-.062	-.029	-.128	-.029	-.177		
11	-.177	-.053	-.390	-.226	.070	-----	.086	-.620		
12	-.243	-.062	-.456	-.275	.135	-.637	-.045	-.177		
13	-.275	-.045	-.308	-.111	.086	-.128	.037	-.012		
14	-.358	-.144	.004	-.078	.119	.086	.135	.103		
15	-.226	-.144	.168	-----						
16	-.390	-.226	.103	-.045						
17	-.440	-.243	.119	.070						
18	-----	-.160								
19	-----	-.154								
20	-.095	-.078								
21	-.029	-.259								
22	.053	-.045								
23	.103	.053								

Integrated section aerodynamic characteristics					
c_n	0.178	0.187	0.214	0.239	0.297
$c_{m_{c/4}}$	-.0064	.0138	.0339	.0486	-.0086

TABLE IX.- Continued

PRESSURE COEFFICIENTS AND AERODYNAMIC CHARACTERISTICS

OF THE CONVAIR XF-92A WING

[M = 0.88]

(c) $M = 0.88$ $\alpha = 7.2^{\circ}$
$C_{N_A} = 0.30$ $\delta_{e_L} = 5.0^{\circ}$ up

Orifice	Pressure coefficients									
	Row A		Row B		Row C		Row D		Row E	
	Upper surface	Lower surface	Upper surface	Lower surface	Upper surface	Lower surface	Upper surface	Lower surface	Upper surface	Lower surface
1	-0.105	-----	-0.593	-----	-0.825	-----	-1.069	-----	-0.617	------
2	-.447	0.354	-.971	0.298	-.886	0.224	-.934	-----	-.691	-0.056
3	-.490	.310	-.849	.224	-.886	.176	-.947	0.188	-.593	-.178
4	-.349	.285	-.581	.188	-.861	.159	-.983	.139	-.390	-.251
5	-.300	.200	-.398	-----	-.832	.034	-.813	.090	-.337	-.227
6	-.288	.176	-.325	.163	-.642	-.007	-.813	.071	-.227	-.129
7	-.300	.163	-.349	-----	-.483	-.032	-.688	.054	-.251	-.142
8	-.276	.127	-.349	-----	-.556	-.105	-.422	-.044		
9	-.215	.066	-.373	.054	-.617	-.081	-.215	-.251		
10	-.227	.139	-.410	-.032	-.044	-.100	-.190	-.202		
11	-.264	.102	-.483	-.166	.066	-----	-.122	-.654		
12	-.337	-.020	-.569	-.227	.151	-.727	-.098	-.483		
13	-.324	-.020	-.227	-.105	.066	-.569	-.124	-.142		
14	-.434	-----	.005	-.068	.102	.054	-.044	.017		
15	-.337	-.100	.188	-----						
16	-.434	-.178	.090	-.117						
17	-.532	-.227	.090	.010						
18	------	-----								
19	------	-----								
20	-.129	-.100								
21	-.068	-.483								
22	.005	-.142								
23	.066	-.015								

Integrated section aerodynamic characteristics					
c_n	0.285	0.300	0.353	0.390	0.242
$c_{m_{c/4}}$	-.0131	.0218	.0522	.0442	-.0077

TABLE IX.- Continued

PRESSURE COEFFICIENTS AND AERODYNAMIC CHARACTERISTICS

OF THE CONVAIR XF-92A WING

[M = 0.88]

(d) $M = 0.88$ $\alpha = 9.1^{\circ}$
$C_{N_A} = 0.38$ $\delta_{e_L} = 5.5^{\circ}$ up

Orifice	Pressure coefficients									
	Row A		Row B		Row C		Row D		Row E	
	Upper surface	Lower surface	Upper surface	Lower surface	Upper surface	Lower surface	Upper surface	Lower surface	Upper surface	Lower surface
1	-0.212	-----	-0.751	-----	-0.982	-----	-1.195	-----	-0.593	------
2	-.735	0.406	-1.020	0.358	-.925	0.342	-.963	-----	-.618	-0.022
3	-.577	.358	-1.030	.263	-.894	.247	-.998	0.215	-.498	-.149
4	-.466	.326	-.989	.247	-.941	.184	-1.005	.200	-.307	-.165
5	-.355	.279	-.941	-----	-.951	.105	-.957	.143	-.339	-.212
6	-.339	.247	-.767	.215	-.751	.041	-1.005	.105	-.244	-.133
7	-.323	.231	-.292	.200	-.640	.025	-.830	.057	-.228	-.165
8	-.339	.152	-.371	.089	-.656	-.054	-.624	.003		
9	-.244	.120	-.371	.105	-.228	-.070	-.418	-.149		
10	-.260	.168	-.418	.041	-.054	-.086	-.355	-.196		
11	-.276	.152	-.513	-.117	.041	-----	-.307	-.672		
12	-.371	.025	-.561	-.165	.168	-.719	-.244	-.450		
13	-.339	-.057	-.149	-.086	.089	-.593	-.260	-.181		
14	-.466	-.070	.025	-.054	.120	.041	-.149	-.006		
15	-.307	-.048	.231	-----						
16	-.434	-.117	.120	-.095						
17	-.536	-.165	.089	.032						
18	------	-.133								
19	------	-.101								
20	-.117	-.070								
21	-.054	-.482								
22	.025	-.133								
23	.089	-.006								

Integrated section aerodynamic characteristics					
c_n	0.325	0.366	0.416	0.561	0.222
$c_{m_{c/4}}$	-.0045	.0310	.0554	-.0022	-.0086

TABLE IX.- Continued

PRESSURE COEFFICIENTS AND AERODYNAMIC CHARACTERISTICS

OF THE CONVAIR XF-92A WING

[M = 0.88]

(e) $M = 0.88$ $\alpha = 11.8^{\circ}$
$C_{N_A} = 0.48$ $\delta_{e_L} = 6.0^{\circ}$ up

Orifice	Pressure coefficients									
	Row A		Row B		Row C		Row D		Row E	
	Upper surface	Lower surface	Upper surface	Lower surface	Upper surface	Lower surface	Upper surface	Lower surface	Upper surface	Lower surface
1	-0.414	-----	-1.000	-----	-1.117	-----	-1.146	-----	-0.377	------
2	-1.165	0.531	-1.110	0.374	-.945	0.282	-1.091	-----	-.396	-0.048
3	-.670	.483	-1.128	.300	-.982	.264	-1.073	0.245	-.194	-.157
4	-.597	.447	-1.165	.319	-1.073	.256	-1.128	.238	-.201	-.377
5	-.579	.392	-1.385	-----	-1.110	.161	-1.165	.227	-.286	-.249
6	-.469	.355	-1.256	.300	-1.055	.117	-1.238	.179	-.304	-.157
7	-.432	.319	-1.165	-----	-1.128	.062	-1.018	.147	-.322	-.231
8	-.377	.264	-.597	-----	-1.037	.007	-.872	.044		
9	-.286	.190	-.505	.172	-.670	-.010	-.670	-.157		
10	-.377	.282	-.396	.117	-.157	-.029	-.579	-.157		
11	-.322	.209	-.542	-.029	-.011	-----	-.608	-.670		
12	-.396	.098	-.615	-.103	.136	-.722	-.348	-.853		
13	-.451	.099	-.066	-.029	.125	-.689	-.377	-.322		
14	-.524	-----	.062	-.029	.007	-.029	-.359	-.103		
15	-.396	.015	.300	-----						
16	-.560	-.066	.117	-.260						
17	-.586	-.103	.044	.117						
18	------	-----								
19	------	-----								
20	-.084	-.066								
21	-.037	-.597								
22	.044	-.267								
23	.044	-.059								

Integrated section aerodynamic characteristics					
c_n	0.466	0.509	0.637	0.711	0.094
$c_{m_{c/4}}$	-.0067	.0413	.0250	-.0070	-.0192

TABLE IX.- Continued

PRESSURE COEFFICIENTS AND AERODYNAMIC CHARACTERISTICS

OF THE CONVAIR XF-92A WING

[M = 0.88]

(f) $M = 0.88$ $\alpha = 11.4^{\circ}$
$C_{N_A} = 0.50$ $\delta_{e_L} = 5.6^{\circ}$ up

Orifice	Pressure coefficients									
	Row A		Row B		Row C		Row D		Row E	
	Upper surface	Lower surface	Upper surface	Lower surface	Upper surface	Lower surface	Upper surface	Lower surface	Upper surface	Lower surface
1	-0.415	-----	-1.022	-----	-1.085	-----	-1.126	-----	-0.409	------
2	-1.132	0.525	-1.069	0.383	-.959	0.345	-1.038	-----	-.409	0
3	-.645	.519	-1.100	.320	-.990	.267	-1.038	0.235	-.205	-.157
4	-.566	.446	-1.132	.305	-1.069	.235	-1.116	.229	-.205	-.299
5	-.550	.398	-1.383	-----	-1.126	.157	-1.132	.188	-.252	-.205
6	-.440	.352	-1.226	.289	-1.038	.125	-1.226	.179	-.252	-.142
7	-.393	.320	-1.100	.273	-1.148	.078	-1.085	.135	-.315	-.220
8	-.346	.305	-.535	.179	-1.063	.015	-.928	.072		
9	-.252	.210	-.440	.163	-.645	0	-.686	-.142		
10	-.362	.289	-.393	.116	-.063	-.041	-.645	-.157		
11	-.330	.226	-.519	-.025	.094	-----	-.572	-.377		
12	-.393	.116	-.613	-.088	.220	-.723	-.337	-.701		
13	-.440	.132	-.173	-.016	.220	-.660	-.362	-.236		
14	-.488	.022	.031	-.032	.078	.006	-.346	-.063		
15	-.440	.015	.235	-----						
16	-.535	-.047	.110	-.173						
17	-.604	-.095	.047	.015						
18	------	-.063								
19	------	-.095								
20	-.126	-.047								
21	-.101	-.566								
22	-.032	-.205								
23	.015	-.032								

Integrated section aerodynamic characteristics					
c_n	0.473	0.519	0.614	0.768	0.104
$c_{m_{c/4}}$	-.0202	.0336	.0410	-.0490	-.0083

TABLE IX.- Concluded

PRESSURE COEFFICIENTS AND AERODYNAMIC CHARACTERISTICS

OF THE CONVAIR XF-92A WING

[M = 0.88]

(g) $M = 0.88$ $\alpha = 14.8^{\circ}$
$C_{N_A} = 0.66$ $\delta_{e_L} = 1.6^{\circ}$ up

Orifice	Pressure coefficients									
	Row A		Row B		Row C		Row D		Row E	
	Upper surface	Lower surface	Upper surface	Lower surface	Upper surface	Lower surface	Upper surface	Lower surface	Upper surface	Lower surface
1	-0.590	-----	-1.286	-----	-1.046	-----	-0.625	-----	-0.615	------
2	-1.525	0.605	-1.222	0.373	-1.062	0.343	-.551	-----	-.663	-0.024
3	-1.126	.557	-1.270	.349	-1.046	.295	-.583	0.247	-.567	-.168
4	-.711	.493	-1.382	.333	-1.078	.263	-.647	.241	-.503	-.296
5	-.663	.461	-1.465	-----	-1.008	.199	-.759	.199	-.471	-.152
6	-.551	.413	-1.557	.317	-.823	.151	-.839	.206	-.423	-.168
7	-.487	.381	-1.413	.317	-.871	.103	-.794	.161	-.439	-.248
8	-.407	.317	-.887	.206	-.912	.056	-.775	.065		
9	-.376	.254	-.663	.206	-.775	.008	-.704	-.152		
10	-.360	.333	-.328	.158	-.663	-.034	-.663	-.168		
11	-.407	.254	-.312	.008	-.455	-----	-.621	-.407		
12	-.439	.158	-.551	-.050	-.471	-.711	-.542	-.689		
13	-.471	.158	-.583	-.008	-.407	-.679	-.551	-.376		
14	-.376	.062	-.360	-.040	-.344	-.066	-.439	-.104		
15	-.248	.040	-.008	-----						
16	-.392	-.024	-.184	-.280						
17	-.478	-.072	-.104	-.072						
18	------	-.040								
19	------	-.072								
20	-.376	-.056								
21	-.318	-.663								
22	-.216	-.344								
23	-.136	-.120								

Integrated section aerodynamic characteristics					
c_n	0.550	0.632	0.768	0.625	0.345
$c_{m_{c/4}}$	-.0259	.0026	-.0614	-.0698	-.0541

TABLE X

PRESSURE COEFFICIENTS AND AERODYNAMIC CHARACTERISTICS

OF THE CONVAIR XF-92A WING*

[M = 0.93]

(a) $M = 0.93$ $\alpha = 1.5^{\circ}$
$C_{N_A} = 0.08$ $\delta_{e_L} = 2.2^{\circ}$ up

Orifice	Pressure coefficients									
	Row A		Row B		Row C		Row D		Row E	
	Upper surface	Lower surface	Upper surface	Lower surface	Upper surface	Lower surface	Upper surface	Lower surface	Upper surface	Lower surface
1	0.304	-----	0.183	-----	0.061	-----	0	-----	-0.081	------
2	-.142	0.183	-.183	0.183	-.284	0.102	-.324	-----	-.487	-0.203
3	-.102	.162	-.142	.102	-.183	0	-.365	0.020	-.487	-.244
4	-.061	.162	-.162	.020	-.162	-.020	-.345	-.061	-.609	-.528
5	-.081	.081	-.102	-----	-.244	-.041	-.365	-.122	-.731	-.670
6	-.081	.081	-.102	.020	-.325	-.162	-.365	-.203	.081	.081
7	-.061	-----	-.122	.020	-.304	-.264	-.365	-.203	.142	.081
8	-.081	0	-.162	-.081	-.426	-.365	-.528	-.284		
9	-.041	-.041	-.183	-.061	-.487	-.426	-.528	-.589		
10	-.061	.020	-.244	-.081	-.426	-.203	-.528	-.568		
11	-.081	.020	-.304	-.345	-.406	-----	-.264	-.568		
12	-.162	-.081	-.406	-.467	-.102	-.548	-.020	-.142		
13	-.183	-.061	-.406	-.325	.041	-.081	.061	-.020		
14	-.284	-.203	-.447	-.081	.162	.142	.162	.142		
15	-.162	-.203	-.020	-----						
16	-.325	-.386	.081	-.020						
17	-.467	-.487	.122	.081						
18	-.406	-.325								
19	-.487	-.508								
20	-.244	-.061								
21	-.122	-.142								
22	.041	-.020								
23	.041	.061								

Integrated section aerodynamic characteristics					
c_n	0.063	0.092	0.094	0.098	0.090
$c_{m_{c/4}}$	.0026	-.0029	.0080	.0266	.0112

TABLE X.- Continued

PRESSURE COEFFICIENTS AND AERODYNAMIC CHARACTERISTICS

OF THE CONVAIR XF-92A WING

[M = 0.93]

(b) $M = 0.93$ $\alpha = 3.4^{\circ}$
$C_{N_A} = 0.12$ $\delta_{e_L} = 3.2^{\circ}$ up

Orifice	Pressure coefficients									
	Row A		Row B		Row C		Row D		Row E	
	Upper surface	Lower surface	Upper surface	Lower surface	Upper surface	Lower surface	Upper surface	Lower surface	Upper surface	Lower surface
1	0.258	-----	0.037	-----	-0.126	-----	-0.387	-----	-0.302	------
2	-.183	0.218	-.285	0.224	-.336	0.088	-.591	-----	-.693	-0.201
3	-.167	.173	-.234	.088	-.268	.020	-.438	0.037	-.574	-.268
4	-.116	.156	-.268	.071	-.268	.031	-.438	-.054	-.649	-.557
5	-.116	.122	-.167	-----	-.251	-.092	-.421	-.099	-.812	-.608
6	-.116	.088	-.167	.037	-.404	-.133	-.455	-.177	.020	.020
7	-.099	.071	-.150	-----	-.387	-.251	-.455	-.190	.105	.071
8	-.133	.003	-.201	-----	-.455	-.353	-.608	-.235		
9	-.065	-.048	-.218	-.065	-.489	-.353	-.557	-.523		
10	-.099	.071	-.285	-.065	-.506	-.201	-.625	-.540		
11	-.133	.088	-.353	-.319	-.336	-----	-.292	-.608		
12	-.218	-.099	-.438	-.438	-.014	-.557	-.048	-.319		
13	-.218	-.065	-.455	-.336	-.027	-.489	.037	-.133		
14	-.319	-----	-.404	-.099	.122	.105	.122	.054		
15	-.201	-.194	-.031	-----						
16	-.353	-.370	.003	-.092						
17	-.428	-.455	.071	.071						
18	-----	-----								
19	-----	-----								
20	-.268	-.099								
21	-.224	-.285								
22	-.167	-.133								
23	-.048	-.007								

Integrated section aerodynamic characteristics					
c_n	0.118	0.127	0.102	0.144	0.189
$c_{m_{c/4}}$	-.0064	0	.0326	.0333	-.0032

TABLE X.- Continued

PRESSURE COEFFICIENTS AND AERODYNAMIC CHARACTERISTICS

OF THE CONVAIR XF-92A WING

[M = 0.93]

(c) $M = 0.93$ $\alpha = 5.6^{\circ}$
$C_{N_A} = 0.20$ $\delta_{e_L} = 4.8^{\circ}$ up

Orifice	Pressure coefficients									
	Row A		Row B		Row C		Row D		Row E	
	Upper surface	Lower surface	Upper surface	Lower surface	Upper surface	Lower surface	Upper surface	Lower surface	Upper surface	Lower surface
1	0.154	-----	-0.214	-----	-0.459	-----	-0.717	-----	-0.499	-----
2	-.248	0.298	-.482	0.305	-.583	0.171	-.851	-----	-.985	-.114
3	-.315	.255	-.348	.188	-.449	.121	-.700	0.104	-.767	-.231
4	-.164	.255	-.298	.154	-.399	.114	-.600	.047	-.573	-.499
5	-.181	.188	-.248	-----	-.365	-.010	-.482	.003	-.516	-.566
6	-.164	.171	-.231	.137	-.432	-.097	-.549	-.023	-.181	.003
7	-.164	.154	-.231	-----	-.415	-.164	-.516	-.054	-.080	-.013
8	-.164	.087	-.248	-----	-.466	-.231	-.650	-.147		
9	-.097	.037	-.265	.020	-.516	-.131	-.583	-.415		
10	-.147	.137	-.298	-.047	-.533	-.097	-.549	-.382		
11	-.147	.154	-.382	-.281	-.131	-----	-.020	-.549		
12	-.231	-.030	-.449	-.365	.087	-.600	-.013	-.667		
13	-.248	-.013	-.482	-.198	.077	-.566	.037	-.298		
14	-.332	-----	-.231	-.047	.121	.087	.070	.020		
15	-.231	-.124	.070	-----						
16	-.365	-.315	.037	-.325						
17	-.439	-.382	.087	.037						
18	-----	-----								
19	-----	-----								
20	-.231	-.064								
21	-.188	-.415								
22	-.114	-.231								
23	-.013	-.040								

Integrated section aerodynamic characteristics					
c_n	0.181	0.201	0.211	0.212	0.238
$c_{m_{c/4}}$	-.0090	.0029	.0298	.0589	-.0045

TABLE X.- Concluded

PRESSURE COEFFICIENTS AND AERODYNAMIC CHARACTERISTICS

OF THE CONVAIR XF-92A WING

[M = 0.93]

(d) $M = 0.93$ $\alpha = 7.4^{\circ}$
$C_{N_A} = 0.30$ $\delta_{e_L} = 5.1^{\circ}$ up

Orifice	Pressure coefficients									
	Row A		Row B		Row C		Row D		Row E	
	Upper surface	Lower surface	Upper surface	Lower surface	Upper surface	Lower surface	Upper surface	Lower surface	Upper surface	Lower surface
1	-0.030	-----	-0.483	-----	-0.694	-----	-0.902	-----	-0.634	------
2	-.399	0.399	-.885	0.322	-.718	0.221	-.919	-----	-.818	-0.064
3	-.433	.322	-.818	.238	-.684	.188	-.919	0.188	-.835	-.148
4	-.349	.288	-.651	.205	-.684	.164	-.952	.148	-.506	-.500
5	-.248	.255	-.416	-----	-.634	.060	-.718	.087	-.433	-.500
6	-.231	.221	-.215	.154	-.600	.003	-.667	.091	-.298	-.399
7	-.215	.188	-.248	-----	-.483	-.064	-.600	.030	-.315	-.164
8	-.215	.154	-.315	-----	-.550	-.097	-.667	-.030		
9	-.215	.070	-.298	.070	-.584	-.080	-.399	-.315		
10	-.181	.188	-.366	.003	-.584	-.080	-.181	-.265		
11	-.198	.121	-.433	-.215	-.030	-----	-.070	-.500		
12	-.265	-.037	-.483	-.265	-.070	-.584	-.104	-.684		
13	-.265	-.037	-.483	-.080	.027	-.516	-.131	-.667		
14	-.366	-----	-.148	-.030	-.070	-.064	-.030	-.080		
15	-.248	-.074	.070	-----						
16	-.399	-.164	.037	-.124						
17	-.456	-.248	.054	-.047						
18	------	-----								
19	------	-----								
20	-.265	-.097								
21	-.205	-.466								
22	-.148	-.282								
23	-.030	-.091								

Integrated section aerodynamic characteristics					
c_n	0.258	0.311	0.367	0.341	0.171
$c_{m_{c/4}}$	-.0077	.0029	.0147	.0653	.0253

TABLE XI

PRESSURE COEFFICIENTS AND AERODYNAMIC CHARACTERISTICS

OF THE CONVAIR XF-92A WING

$[C_{N_A} \approx 0.3]$

(a) $M = 0.42$ $\alpha = 9.6^{\circ}$
$C_{N_A} = 0.29$ $\delta_{e_L} = 4.0^{\circ}$ up

Orifice	Pressure coefficients									
	Row A		Row B		Row C		Row D		Row E	
	Upper surface	Lower surface	Upper surface	Lower surface	Upper surface	Lower surface	Upper surface	Lower surface	Upper surface	Lower surface
1	-0.568	-----	-1.447	-----	-2.394	-----	-3.772	-----	-1.361	-----
2	-.543	0.405	-.844	0.256	-.887	0.189	-1.662	-----	-.956	0
3	-.456	.319	-.586	.189	-.543	.189	-1.188	0.189	-.672	.103
4	-.370	.189	-.499	.146	-.499	.103	-.758	.146	-.456	-.069
5	-.344	.189	-.413	-----	-.370	.060	-.499	.121	-.241	-.026
6	-.327	.103	-.370	.146	-.413	-.026	-.456	-.078	-.155	-.026
7	-.327	.146	-.327	.146	-.370	.017	-.282	.043	-.112	-.069
8	-.284	.146	-.370	.017	-.284	.017	-.284	-.026		
9	-.241	.017	-.327	.017	-.198	-.069	-.198	-.198		
10	-.198	.146	-.241	-.026	-.112	-.026	-.112	-.155		
11	-.241	.060	-.284	-.069	-.112	-----	.017	-.327		
12	-.284	-.026	-.241	-.155	.103	-.155	-.026	-.069		
13	-.241	-.026	-.155	-.026	.017	-.026	-.026	-.026		
14	-.284	-.009	-.017	-.026	.060	.060	.017	.017		
15	-.198	-.052	.103	-----						
16	-.241	-.155	.017	-.026						
17	-.241	-.069	.017	.017						
18	-.198	-.069								
19	-.155	-.026								
20	-.026	-.026								
21	.043	-.198								
22	.060	-.026								
23	.043	.017								

Integrated section aerodynamic characteristics					
c_n	0.240	0.254	0.322	0.316	0.389
$c_{m_{c/4}}$	.0038	.0144	.0173	.0410	-.0128

TABLE XI.- Continued

PRESSURE COEFFICIENTS AND AERODYNAMIC CHARACTERISTICS

OF THE CONVAIR XF-92A WING

$[C_{N_A} \approx 0.3]$

(b) $M = 0.72$ $\alpha = 8.1^{\circ}$
$C_{N_A} = 0.30$ $\delta_{e_L} = 3.9^{\circ}$ up

Orifice	Pressure coefficients									
	Row A		Row B		Row C		Row D		Row E	
	Upper surface	Lower surface	Upper surface	Lower surface	Upper surface	Lower surface	Upper surface	Lower surface	Upper surface	Lower surface
1	-0.296	-----	-0.935	-----	-1.279	-----	-1.442	-----	-0.604	-----
2	-.560	0.335	-.979	0.278	-.781	0.212	-1.023	-----	-.670	0.101
3	-.450	.278	-.538	.182	-.737	.168	-1.001	0.190	-.604	.035
4	-.340	.256	-.450	.190	-.648	.159	-.957	.181	-.260	-.097
5	-.340	.211	-.406	-----	-.560	.066	-.737	.146	-.273	-.141
6	-.340	.190	-.362	.168	-.538	.013	-.648	.049	-.185	-.075
7	-.273	.168	-.362	-----	-.406	.009	-.516	.049	-.141	-.097
8	-.296	.079	-.384	-----	-.362	.013	-.384	-.075		
9	-.251	.035	-.362	.057	-.229	-.075	-.207	-.185		
10	-.251	.146	-.362	.009	-.097	-.097	-.119	-.229		
11	-.273	.079	-.362	-.119	-.030	-----	-.084	-.450		
12	-.296	-.031	-.296	-.163	-.035	-.273	-.039	-.119		
13	-.340	-.031	-.163	-.075	.022	-.097	-.075	-.053		
14	-.340	-----	-.031	-.075	-.057	-.035	-.009	.013		
15	-.251	-.088	.124	-----						
16	-.318	-.119	.079	-.066						
17	-.282	-.141	.057	.035						
18	------	-----								
19	------	-----								
20	-.074	-.053								
21	.004	-.207								
22	.035	-.074								
23	.057	.022								

Integrated section aerodynamic characteristics					
c_n	0.246	0.266	0.334	0.393	0.264
$c_{m_{c/4}}$	.0035	.0202	.0208	.0288	.0035

TABLE XI.- Continued

PRESSURE COEFFICIENTS AND AERODYNAMIC CHARACTERISTICS

OF THE CONVAIR XF-92A WING

$[C_{N_A} \approx 0.3]$

(c) $M = 0.73$ $\alpha = 8.0^\circ$
$C_{N_A} = 0.29$ $\delta_{e_L} = 3.1^\circ$ up

Orifice	Pressure coefficients									
	Row A		Row B		Row C		Row D		Row E	
	Upper surface	Lower surface	Upper surface	Lower surface	Upper surface	Lower surface	Upper surface	Lower surface	Upper surface	Lower surface
1	-0.291	-----	-0.906	-----	-1.225	-----	-1.430	-----	-0.564	-----
2	-.542	0.347	-.997	0.301	-.815	0.210	-1.020	-----	-.655	0.119
3	-.415	.301	-.564	.255	-.701	.187	-.974	0.255	-.633	.051
4	-.359	.278	-.450	.187	-.633	.178	-.974	.187	-.291	-.086
5	-.337	.233	-.359	-----	-.564	.073	-.724	.164	-.268	-.109
6	-.314	.210	-.359	.187	-.496	.028	-.633	.105	-.177	-.086
7	-.291	.164	-.337	.164	-.428	.028	-.496	.073	-.132	-.086
8	-.268	.119	-.359	.051	-.359	-.063	-.337	-.063		
9	-.223	.073	-.314	.051	-.223	-.063	-.223	-.177		
10	-.223	.119	-.337	.051	-.086	-.086	-.154	-.223		
11	-.268	.096	-.359	-.086	-.018	-----	-.041	-.450		
12	-.291	.005	-.291	-.132	.051	-.245	-.041	-.109		
13	-.314	.005	-.132	-.063	.051	-.086	-.063	-.041		
14	-.314	-.086	-.018	-.041	.051	.051	.028	.028		
15	-.268	-.088	.119	-----						
16	-.314	-.112	.073	-.041						
17	-.245	-.132	.096	.051						
18	------	-.112								
19	------	-.099								
20	-.063	-.063								
21	.028	-.200								
22	.073	-.018								
23	.073	.051								

Integrated section aerodynamic characteristics					
c_n	0.240	0.268	0.326	0.403	0.290
$c_{m_{c/4}}$	.0064	.0173	.0259	.0330	-.0093

TABLE XI.- Continued

PRESSURE COEFFICIENTS AND AERODYNAMIC CHARACTERISTICS

OF THE CONVAIR XF-92A WING

$[C_{N_A} \approx 0.3]$

(d) $M = 0.76$ $\alpha = 7.8^{\circ}$
$C_{N_A} = 0.30$ $\delta_{e_L} = 4.5^{\circ}$ up

Orifice	Pressure coefficients									
	Row A		Row B		Row C		Row D		Row E	
	Upper surface	Lower surface	Upper surface	Lower surface	Upper surface	Lower surface	Upper surface	Lower surface	Upper surface	Lower surface
1	-0.235	-----	-0.781	-----	-1.150	-----	-1.347	-----	-0.508	-----
2	-.550	0.344	-1.054	0.290	-.781	0.227	-.991	-----	-.592	0.101
3	-.445	.311	-.550	.227	-.718	.206	-1.012	0.227	-.487	.017
4	-.319	.290	-.445	.206	-.655	.155	-.928	.197	-.222	-.130
5	-.319	.227	-.340	-----	-.592	.088	-.718	.164	-.256	-.130
6	-.319	.206	-.361	.164	-.466	.017	-.676	.109	-.172	-.067
7	-.277	.185	-.340	-----	-.445	-.004	-.466	.050	-.130	-.088
8	-.298	.122	-.361	-----	-.361	-.038	-.445	-.067		
9	-.235	.059	-.319	.059	-.235	-.067	-.172	-.151		
10	-.235	.164	-.340	.004	-.088	-.088	-.109	-.235		
11	-.256	.101	-.361	-.088	-.004	-----	-.034	-.550		
12	-.298	-.004	-.298	-.151	-.080	-.298	-.013	-.172		
13	-.340	-.004	-.130	-.088	-.067	-.088	-.046	-.046		
14	-.340	-----	-.004	-.067	-.080	-.059	.017	.017		
15	-.256	-.080	.164	-----						
16	-.319	-.130	.101	-.080						
17	-.243	-.193	.080	-.038						
18	------	-----								
19	------	-----								
20	-.046	-.067								
21	.029	-.197								
22	.059	-.067								
23	.080	.046								

Integrated section aerodynamic characteristics					
c_n	0.235	0.250	0.340	0.373	0.241
$c_{m_{c/4}}$	.0115	.0307	.0154	.0413	-.0099

TABLE XI.- Continued

PRESSURE COEFFICIENTS AND AERODYNAMIC CHARACTERISTICS

OF THE CONVAIR XF-92A WING

$\left[C_{N_A} \approx 0.3\right]$

(e) $M = 0.82$ $\alpha = 7.2^{\circ}$
$C_{N_A} = 0.30$ $\delta_{e_L} = 4.2^{\circ}$ up

Orifice	Pressure coefficients									
	Row A		Row B		Row C		Row D		Row E	
	Upper surface	Lower surface	Upper surface	Lower surface	Upper surface	Lower surface	Upper surface	Lower surface	Upper surface	Lower surface
1	-0.159	-----	-0.715	-----	-1.005	-----	-1.232	-----	-0.497	-----
2	-.477	0.310	-1.073	0.278	-.775	0.199	-1.013	-----	-.596	0.040
3	-.437	.298	-.795	.179	-.735	.159	-1.013	0.179	-.556	-.040
4	-.338	.278	-.417	.179	-.715	.151	-.993	.131	-.246	-.139
5	-.298	.218	-.318	-----	-.675	.048	-.695	.139	-.278	-.159
6	-.318	.199	-.338	.139	-.655	0	-.695	.087	-.218	-.079
7	-.278	.179	-.338	-----	-.516	-.020	-.536	.052	-.179	-.119
8	-.298	.119	-.397	-----	-.397	-.079	-.417	-.060		
9	-.298	.040	-.358	.040	-.238	-.079	-.179	-.218		
10	-.218	.199	-.477	0	-.099	-.159	-.159	-.218		
11	-.278	.079	-.497	-.139	0	-----	-.048	-.775		
12	-.318	-.040	-.358	-.179	-.060	-.397	-.028	-.139		
13	-.358	0	-.159	-.060	.048	-.179	-.040	-.060		
14	-.397	-----	-.020	-.079	-.079	-.060	0	.020		
15	-.298	-.111	.159	-----						
16	-.417	-.139	.079	-.072						
17	-.306	-.139	.079	.040						
18	------	-----								
19	------	-----								
20	-.079	-.060								
21	-.068	-.258								
22	.020	-.099								
23	.060	.008								

Integrated section aerodynamic characteristics					
c_n	0.255	0.294	0.339	0.376	0.235
$c_{m_{c/4}}$	-.0019	.0195	.0304	.0413	.0102

TABLE XI.- Continued

PRESSURE COEFFICIENTS AND AERODYNAMIC CHARACTERISTICS

OF THE CONVAIR XF-92A WING

$[C_{N_A} \approx 0.3]$

(f) $M = 0.85$ $\alpha = 7.0^{\circ}$
$C_{N_A} = 0.30$ $\delta_{e_L} = 4.2^{\circ}$ up

Orifice	Pressure coefficients									
	Row A		Row B		Row C		Row D		Row E	
	Upper surface	Lower surface	Upper surface	Lower surface	Upper surface	Lower surface	Upper surface	Lower surface	Upper surface	Lower surface
1	-0.108	-----	-0.605	-----	-0.883	-----	-1.142	-----	-0.167	-----
2	-.446	0.350	-1.003	0.310	-.764	0.210	-1.082	-----	-.824	0.031
3	-.446	.290	-.704	.230	-.704	.171	-1.082	0.210	-.704	-.048
4	-.307	.270	-.446	.171	-.605	.143	-1.062	.151	-.406	-.148
5	-.307	.230	-.307	-----	-.585	.051	-.784	.111	-.327	-.167
6	-.287	.191	-.346	.171	-.585	-.008	-.724	.090	-.207	-.088
7	-.267	.187	-.327	.151	-.525	-.028	-.545	.051	-.187	-.128
8	-.267	.111	-.346	.031	-.585	-.088	-.327	-.068		
9	-.168	.071	-.327	.031	-.267	-.088	-.187	-.327		
10	-.227	.131	-.430	-.008	-.108	-.128	-.128	-.207		
11	-.247	.071	-.446	-.148	-.016	-----	-.028	-.704		
12	-.286	-.028	-.525	-.207	.051	-.724	-.048	-.128		
13	-.327	-.008	-.167	-.088	.031	-.108	-.048	-.048		
14	-.407	-.108	-.028	-.088	.051	.051	-.031	-.031		
15	-.267	-.108	.111	-----						
16	-.466	-.168	.071	-.068						
17	-.426	-.188	.091	.051						
18	------	-.148								
19	------	-.140								
20	-.088	-.068								
21	-.008	-.267								
22	.051	-.068								
23	.091	.031								

Integrated section aerodynamic characteristics					
c_n	0.245	0.282	0.322	0.390	0.311
$c_{m_{c/4}}$	-.0010	.0163	.0301	.0448	-.0056

TABLE XI.- Continued

PRESSURE COEFFICIENTS AND AERODYNAMIC CHARACTERISTICS

OF THE CONVAIR XF-92A WING

$[C_{N_A} \approx 0.3]$

(g) $M = 0.88$ $\alpha = 7.2^{\circ}$
$C_{N_A} = 0.30$ $\delta_{e_L} = 5.0^{\circ}$ up

Orifice	Pressure coefficients									
	Row A		Row B		Row C		Row D		Row E	
	Upper surface	Lower surface	Upper surface	Lower surface	Upper surface	Lower surface	Upper surface	Lower surface	Upper surface	Lower surface
1	-0.105	-----	-0.593	-----	-0.825	-----	-1.069	-----	-0.617	------
2	-.447	0.354	-.971	0.298	-.886	0.224	-.934	-----	-.691	-0.056
3	-.490	.310	-.849	.224	-.886	.176	-.947	0.188	-.593	-.178
4	-.349	.285	-.581	.188	-.861	.159	-.983	.139	-.390	-.251
5	-.300	.200	-.398	-----	-.832	.034	-.813	.090	-.337	-.227
6	-.288	.176	-.325	.163	-.642	-.007	-.813	.071	-.227	-.129
7	-.300	.163	-.349	-----	-.483	-.032	-.688	.054	-.251	-.142
8	-.276	.127	-.349	-----	-.556	-.105	-.422	-.044		
9	-.215	.066	-.373	.054	-.617	-.081	-.215	-.251		
10	-.227	.139	-.410	-.032	-.044	-.100	-.190	-.202		
11	-.264	.102	-.483	-.166	.066	-----	-.122	-.654		
12	-.337	-.020	-.569	-.227	.151	-.727	-.098	-.483		
13	-.324	-.020	-.227	-.105	.066	-.569	-.124	-.142		
14	-.434	-----	.005	-.068	.102	.054	-.044	.017		
15	-.337	-.100	.188	-----						
16	-.434	-.178	.090	-.117						
17	-.532	-.227	.090	.010						
18	------	-----								
19	------	-----								
20	-.129	-.100								
21	-.068	-.483								
22	.005	-.142								
23	.066	-.015								

Integrated section aerodynamic characteristics					
c_n	0.285	0.300	0.353	0.390	0.242
$c_{m_{c/4}}$	-.0131	.0218	.0522	.0442	-.0077

TABLE XI.- Continued

PRESSURE COEFFICIENTS AND AERODYNAMIC CHARACTERISTICS

OF THE CONVAIR XF-92A WING

$[C_{N_A} \approx 0.3]$

(h) $M = 0.91$ $\alpha = 7.6^{\circ}$
$C_{N_A} = 0.30$ $\delta_{e_L} = 6.1^{\circ}$ up

Orifice	Pressure coefficients									
	Row A		Row B		Row C		Row D		Row E	
	Upper surface	Lower surface	Upper surface	Lower surface	Upper surface	Lower surface	Upper surface	Lower surface	Upper surface	Lower surface
1	-0.064	-----	-0.497	-----	-0.738	-----	-0.978	-----	-0.609	------
2	-.449	0.401	-.978	0.353	-.786	0.241	-.962	-----	-.786	-0.064
3	-.481	.321	-.882	.257	-.754	.193	-.978	0.209	-.706	-.176
4	-.385	.305	-.754	.209	-.722	.186	-.994	.161	-.417	-.465
5	-.272	.257	-.513	-----	-.738	.064	-.818	.129	-.385	-.513
6	-.272	.225	-.240	.193	-.658	0	-.786	.087	-.240	-.080
7	-.256	.177	-.288	.209	-.561	-.032	-.722	.081	-.224	-.080
8	-.240	.145	-.340	.064	-.609	-.080	-.561	-.064		
9	-.192	.097	-.337	.064	-.641	-.080	-.288	-.385		
10	-.208	.161	-.353	0	-.112	-.112	-.240	-.144		
11	-.224	.113	-.465	-.160	.016	-----	-.144	-.593		
12	-.305	.016	-.497	-.257	.097	-.657	-.160	-.786		
13	-.288	.016	-.497	-.112	.048	-.625	-.144	-.738		
14	-.369	-.096	-.016	-.064	.081	-.016	-.048	-.080		
15	-.256	-.096	.177	-----						
16	-.401	-.176	.081	-.433						
17	-.497	-.224	.097	-.016						
18	------	-.144								
19	------	-.154								
20	-.160	-.080								
21	-.128	-.481								
22	-.032	-.288								
23	.048	-.032								

	Integrated section aerodynamic characteristics				
c_n	0.274	0.294	0.364	0.362	0.199
$c_{m_{c/4}}$	-.0067	.0355	.0444	.0787	-.0025

TABLE XI.- Continued

PRESSURE COEFFICIENTS AND AERODYNAMIC CHARACTERISTICS

OF THE CONVAIR XF-92A WING

$[C_{N_A} \approx 0.3]$

(i) $M = 0.92$ $\alpha = 7.3^{\circ}$
$C_{N_A} = 0.31$ $\delta_{e_L} = 4.9^{\circ}$ up

Orifice	Pressure coefficients									
	Row A		Row B		Row C		Row D		Row E	
	Upper surface	Lower surface	Upper surface	Lower surface	Upper surface	Lower surface	Upper surface	Lower surface	Upper surface	Lower surface
1	-0.030	-----	-0.469	-----	-0.731	-----	-0.909	-----	-0.608	------
2	-.393	0.367	-.885	0.336	-.746	0.284	-.916	-----	-.839	-0.039
3	-.439	.284	-.700	.244	-.716	.177	-.946	0.177	-.762	-.177
4	-.316	.284	-.454	.198	-.700	.146	-.931	.140	-.500	-.439
5	-.254	.244	-.316	-----	-.648	.038	-.685	.100	-.439	-.516
6	-.239	.213	-.285	.167	-.577	-.008	-.669	.060	-.254	-.039
7	-.239	.146	-.285	.167	-.500	-.054	-.623	.017	-.223	-.100
8	-.223	.161	-.300	.059	-.556	-.100	-.685	-.045		
9	-.146	.069	-.316	.105	-.623	-.100	-.540	-.362		
10	-.208	.167	-.346	.007	-.146	-.110	-.085	-.131		
11	-.223	.105	-.439	-.187	.038	-----	-.060	-.562		
12	-.254	-.002	-.485	-.264	.100	-.623	-.076	-.762		
13	-.285	.013	-.516	-.116	.069	-.577	-.085	-.285		
14	-.377	-.110	-.008	-.054	.084	.060	.023	.023		
15	-.285	-.116	.130	-----						
16	-.408	-.177	.069	-.223						
17	-.491	-.239	.100	.038						
18	------	-.146								
19	------	-.131								
20	-.162	-.070								
21	-.153	-.454								
22	-.023	-.208								
23	.038	-.008								

Integrated section aerodynamic characteristics					
c_n	0.250	0.293	0.313	0.349	0.238
$c_{m_{c/4}}$	-.0051	.0099	.0496	.0550	-.0022

TABLE XI.- Concluded

PRESSURE COEFFICIENTS AND AERODYNAMIC CHARACTERISTICS

OF THE CONVAIR XF-92A WING

$[C_{N_A} \approx 0.3]$

(j) $M = 0.93$ $\alpha = 7.4^{\circ}$
$C_{N_A} = 0.30$ $\delta_{e_L} = 5.1^{\circ}$ up

Orifice	Pressure coefficients									
	Row A		Row B		Row C		Row D		Row E	
	Upper surface	Lower surface	Upper surface	Lower surface	Upper surface	Lower surface	Upper surface	Lower surface	Upper surface	Lower surface
1	-0.030	-----	-0.483	-----	-0.694	-----	-0.902	-----	-0.634	------
2	-.399	0.399	-.885	0.322	-.718	0.221	-.919	-----	-.818	-0.064
3	-.433	.322	-.818	.238	-.684	.188	-.919	0.188	-.835	-.148
4	-.349	.288	-.651	.205	-.684	.164	-.952	.148	-.506	-.500
5	-.248	.255	-.416	-----	-.634	.060	-.718	.087	-.433	-.500
6	-.231	.221	-.215	.154	-.600	.003	-.667	.091	-.298	-.399
7	-.215	.188	-.248	-----	-.483	-.064	-.600	.030	-.315	-.164
8	-.215	.154	-.315	-----	-.550	-.097	-.667	-.030		
9	-.215	.070	-.298	.070	-.584	-.080	-.399	-.315		
10	-.181	.188	-.366	.003	-.584	-.080	-.181	-.265		
11	-.198	.121	-.433	-.215	-.030	-----	-.070	-.500		
12	-.265	-.037	-.483	-.265	-.070	-.584	-.104	-.684		
13	-.265	-.037	-.483	-.080	.027	-.516	-.131	-.667		
14	-.366	-----	-.148	-.030	-.070	-.064	-.030	-.080		
15	-.248	-.074	.070	-----						
16	-.399	-.164	.037	-.124						
17	-.456	-.248	.054	-.047						
18	------	-----								
19	------	-----								
20	-.265	-.097								
21	-.205	-.466								
22	-.148	-.282								
23	-.030	-.091								

Integrated section aerodynamic characteristics					
c_n	0.258	0.311	0.367	0.341	0.171
$c_{m_{c/4}}$	-.0077	.0029	.0147	.0653	.0253

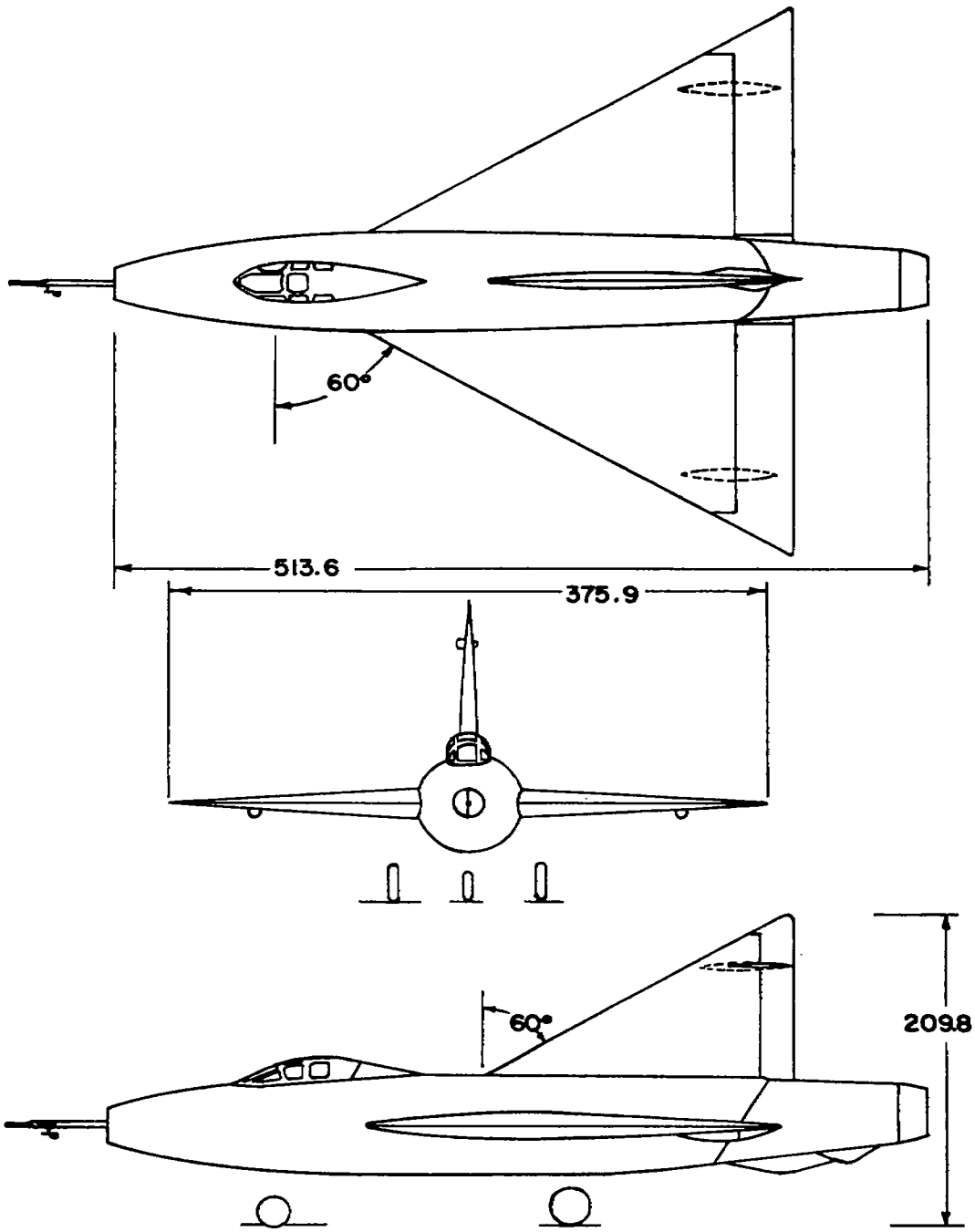

Figure 1.- A Three-view drawing of the XF-92A airplane. All dimensions in inches.

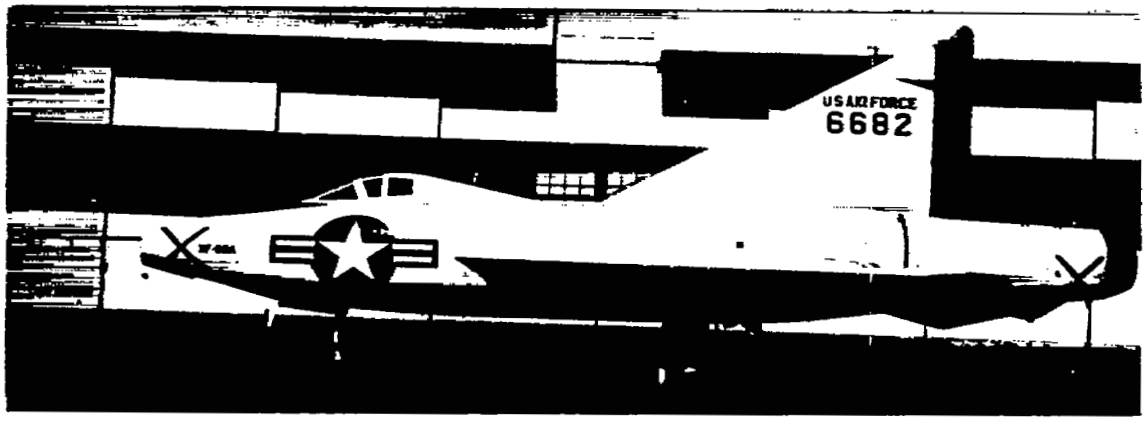

(a) Left side view.

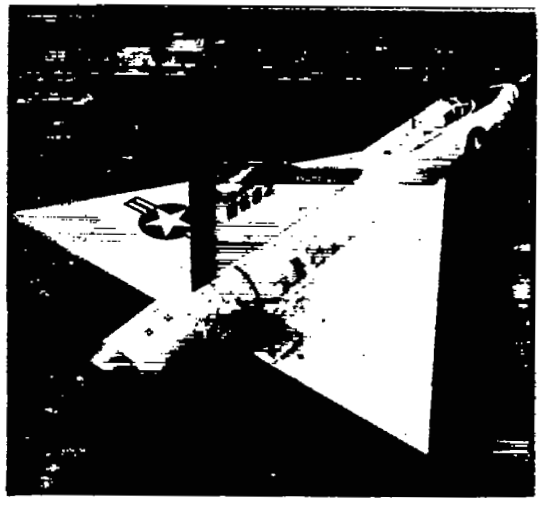

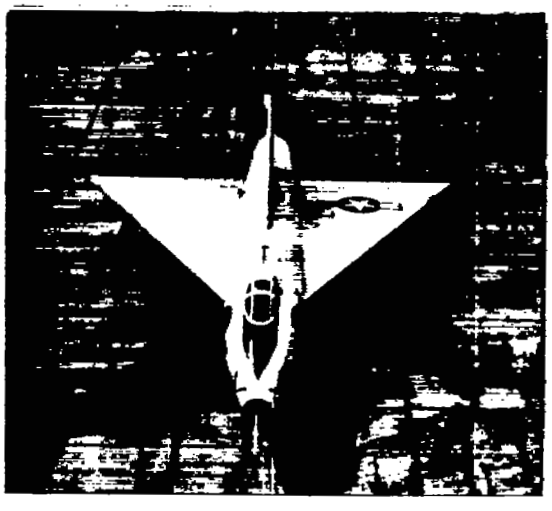

L-89344

(b) Three-quarter rear view.

(c) Overhead front view.

Figure 2.- Photographs of XF-92A research airplane.

Orifice row	A	B	C	D	E
Chord length, c, feet	21.79	18.32	13.74	9.81	3.30
Distance from airplane ℄ percent b/2	19.7	32.5	49.4	63.9	87.8
Distance from row A, percent b'/2	0	16.0	37.0	55.0	84.9

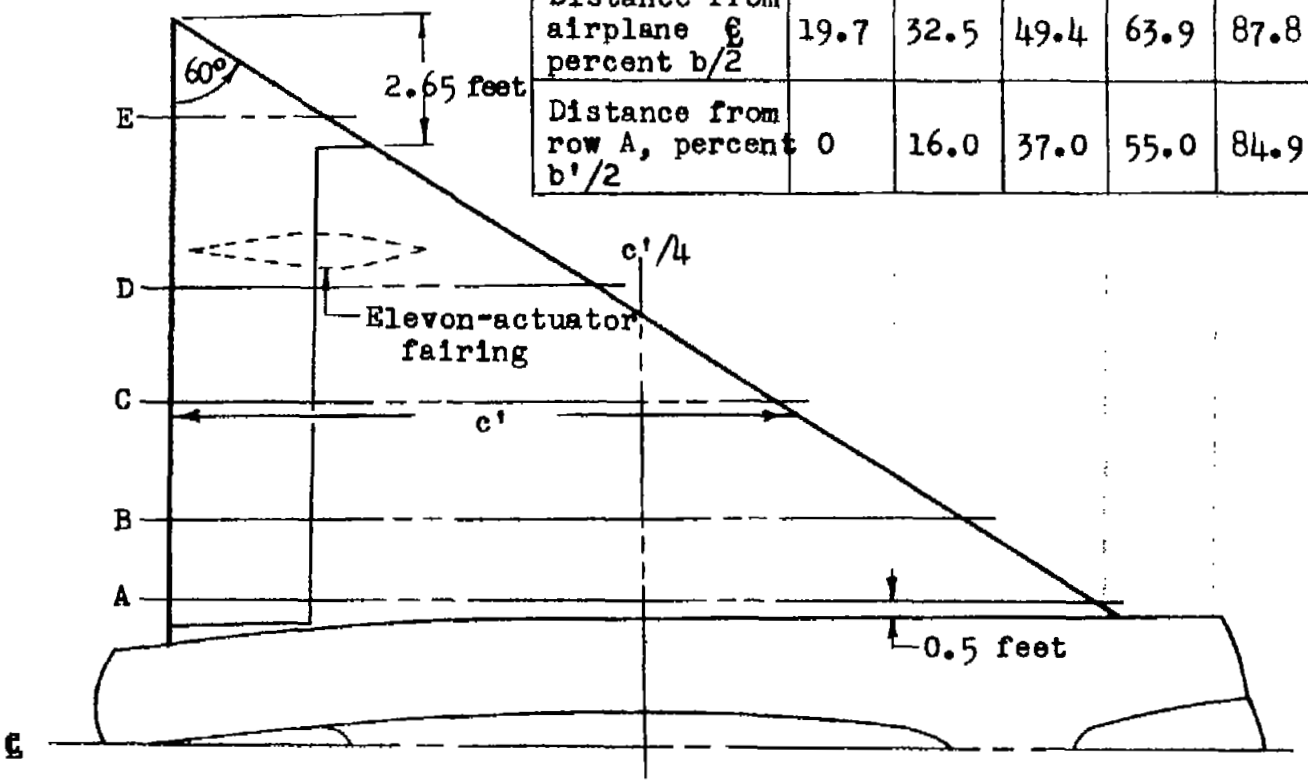

Figure 3.- Drawing of the left wing showing the spanwise location of the static-pressure orifices.

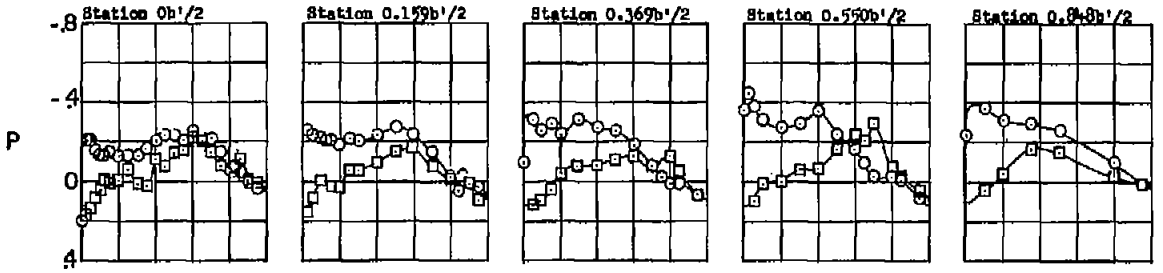

(a) $C_{N_A} = 0.11$; $\alpha = 3.4^{\circ}$; $\delta_{e_L} = 1.9^{\circ}$ up; $M = 0.67$.

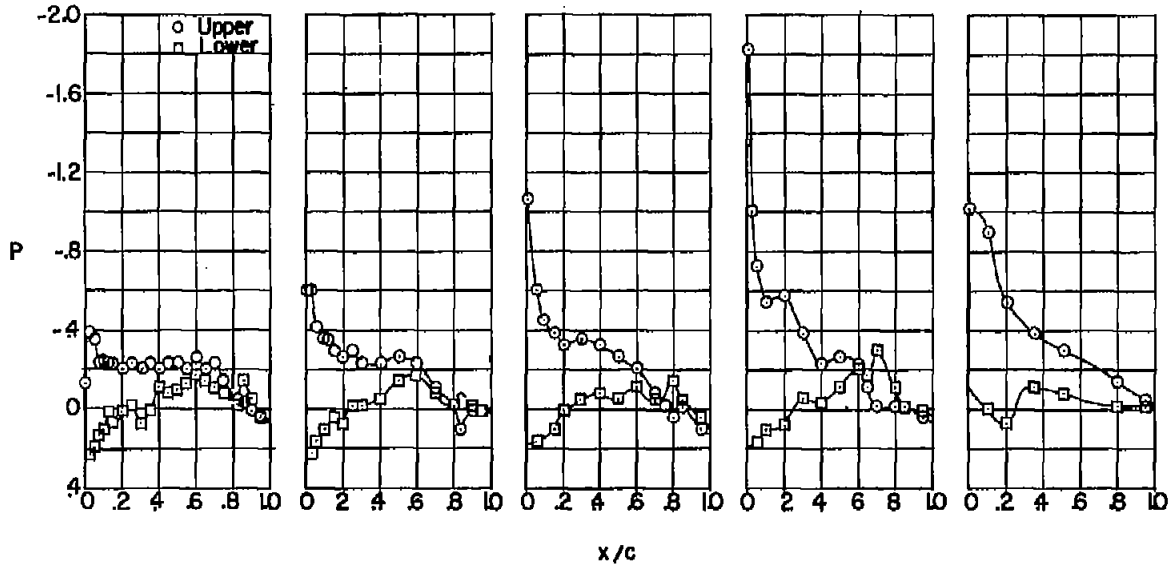

(b) $C_{N_A} = 0.21$; $\alpha = 6.4^{\circ}$; $\delta_{e_L} = 2.8^{\circ}$ up; $M = 0.50$.

Figure 4.- Pressure distribution over the wing at five semispan stations for several values of airplane normal-force coefficient. Stall approach. XF-92A airplane.

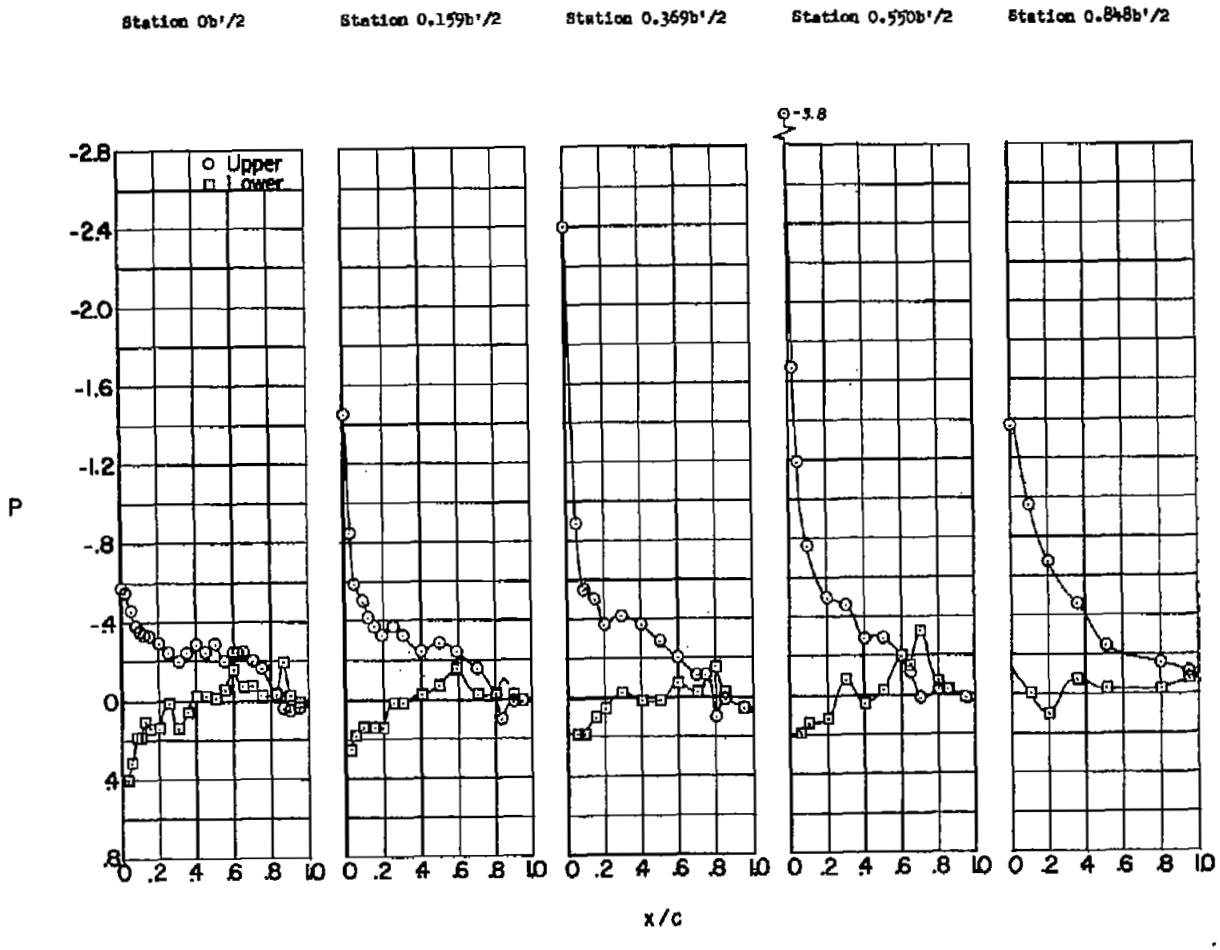

(c) $C_{N_A} = 0.29$; $\alpha = 9.6^{\circ}$; $\delta_{e_L} = 4.0^{\circ}$ up; $M = 0.42$.

Figure 4.- Continued.

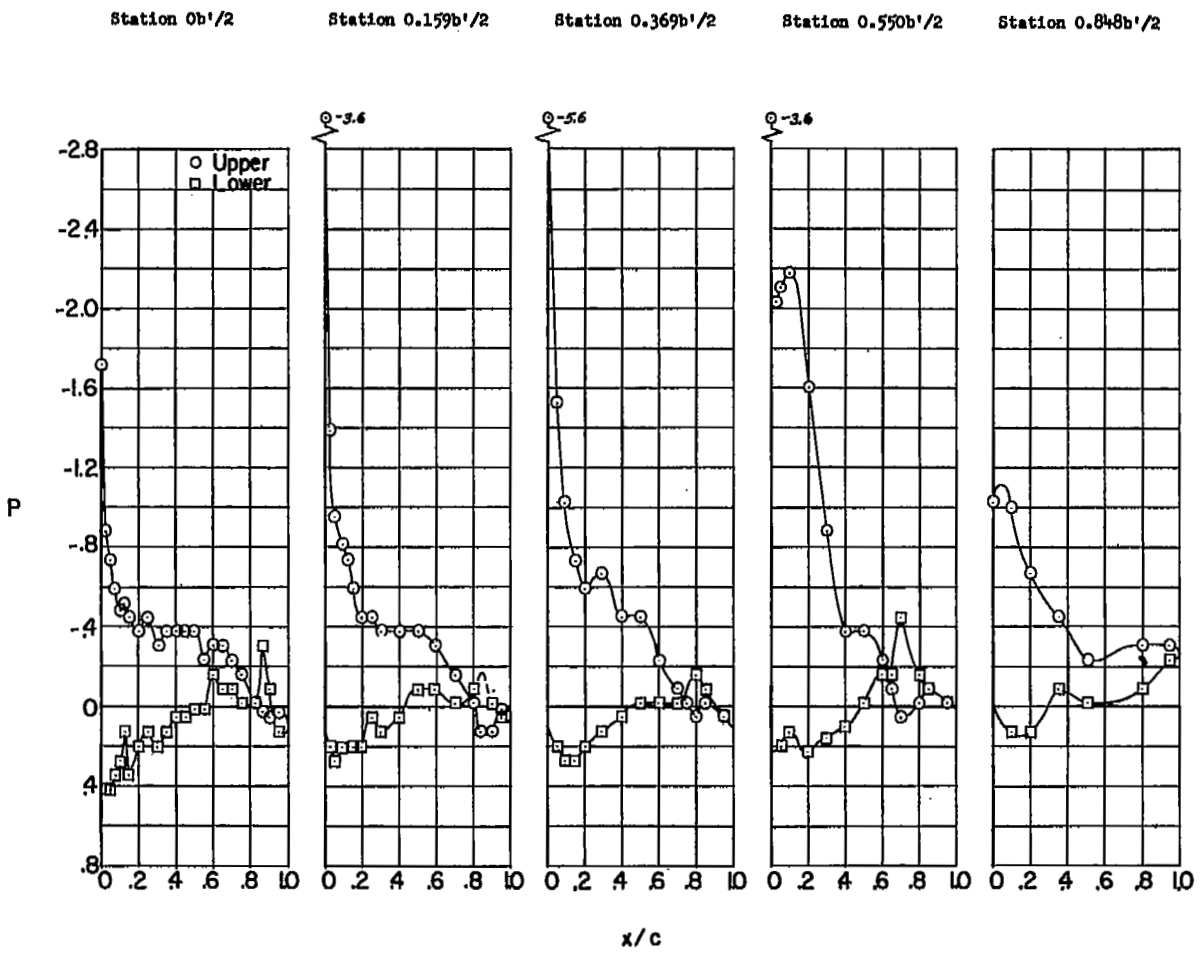

(d) $C_{N_A} = 0.42$; $\alpha = 12.8^{\circ}$; $\delta_{e_L} = 5.9^{\circ}$ up; $M = 0.32$.

Figure 4.- Continued.

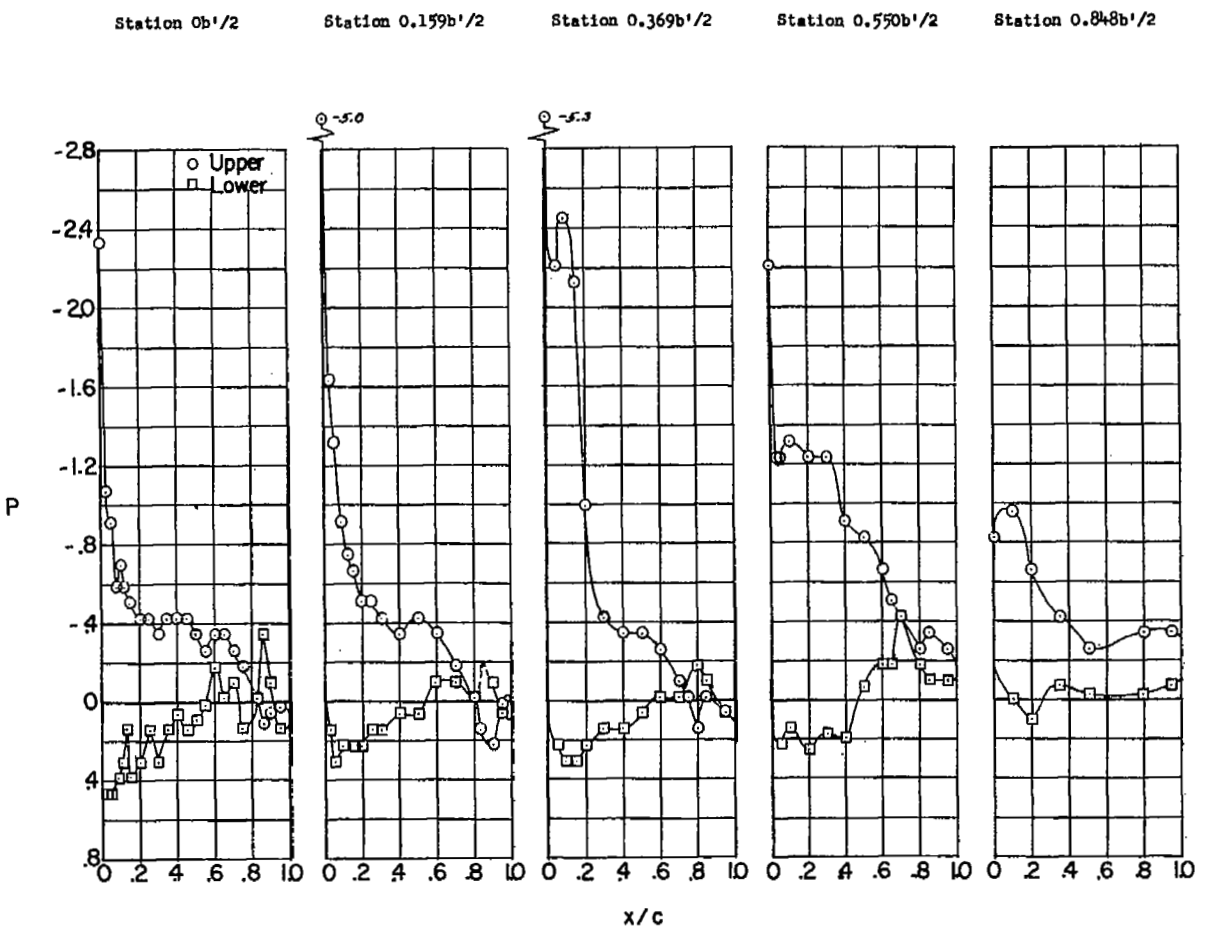

(e) $C_{N_A} = 0.50$; $\alpha = 15.7^{\circ}$; $\delta_{e_L} = 6.5^{\circ}$ up; $M = 0.30$.

Figure 4.- Concluded.

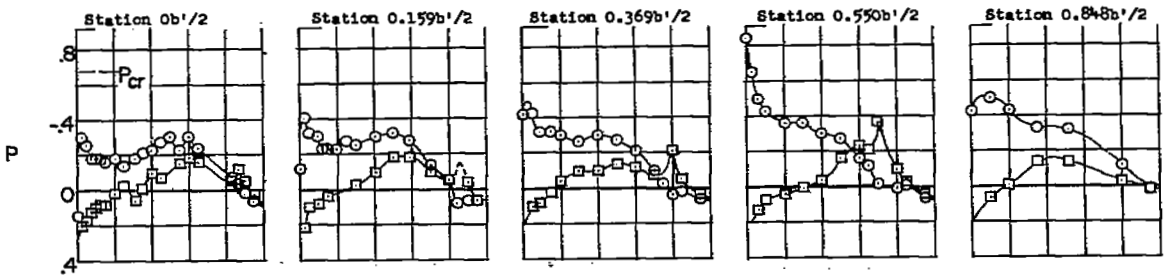

(a) $C_{N_A} = 0.14$; $\alpha = 4.2^{\circ}$; $\delta_{e_L} = 2.4^{\circ}$ up.

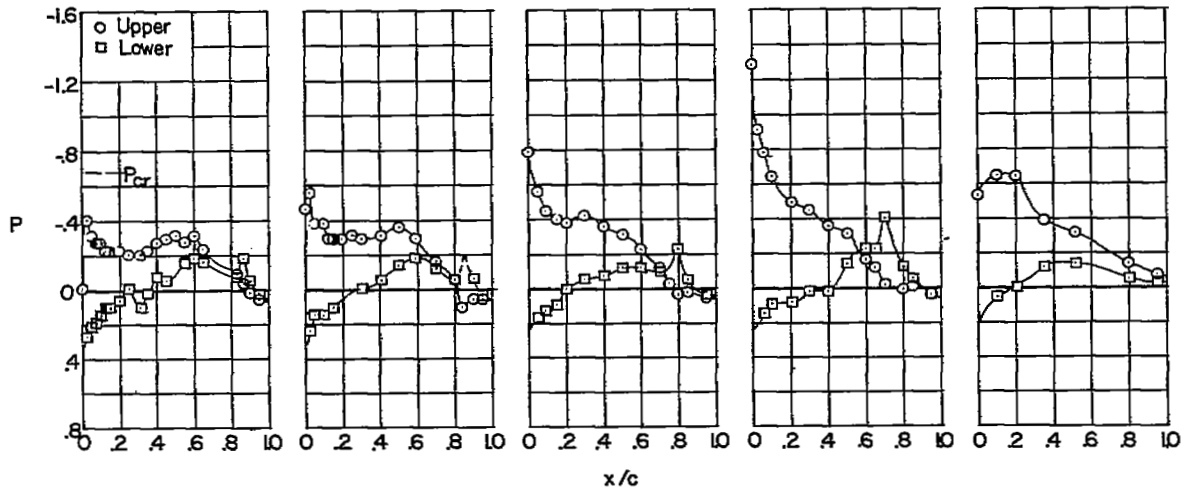

(b) $C_{N_A} = 0.21$; $\alpha = 5.8^{\circ}$; $\delta_{e_L} = 3.0^{\circ}$ up.

Figure 5.- Pressure distribution over the wing at five semispan stations for several values of airplane normal-force coefficient. $M = 0.70 \pm 0.03$. XF-92A airplane.

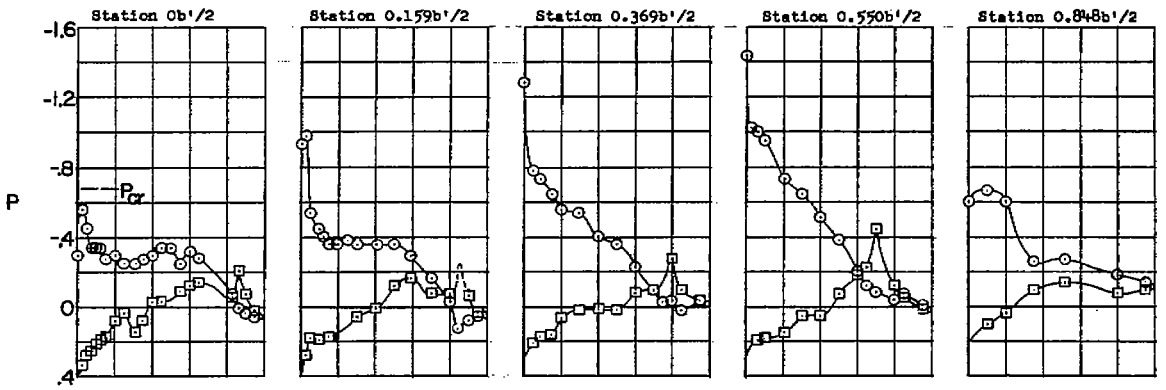

(c) $C_{N_A} = 0.30$; $\alpha = 8.1^{\circ}$; $\delta_{e_L} = 3.9^{\circ}$ up.

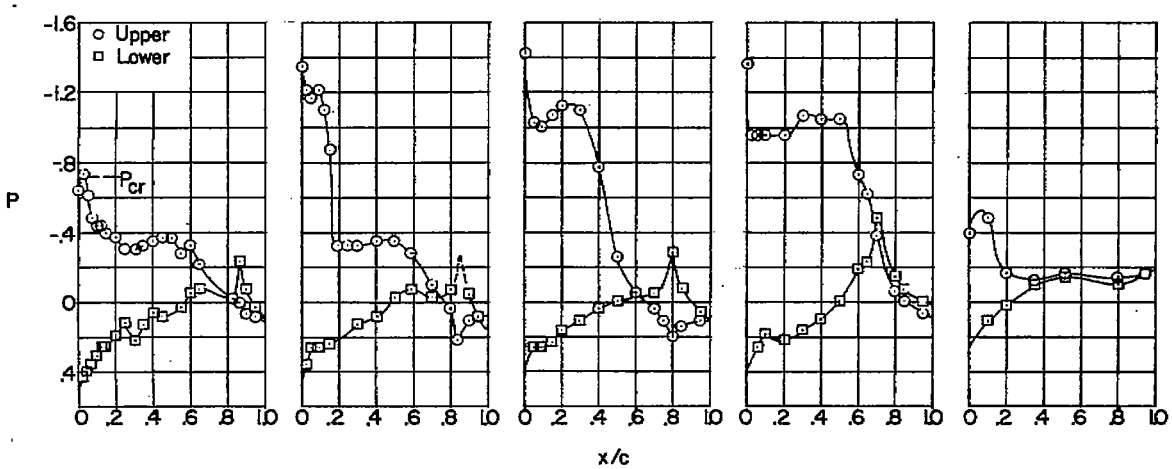

(d) $C_{N_A} = 0.40$; $\alpha = 10.2^{\circ}$; $\delta_{e_L} = 5.0^{\circ}$ up.

Figure 5.- Continued.

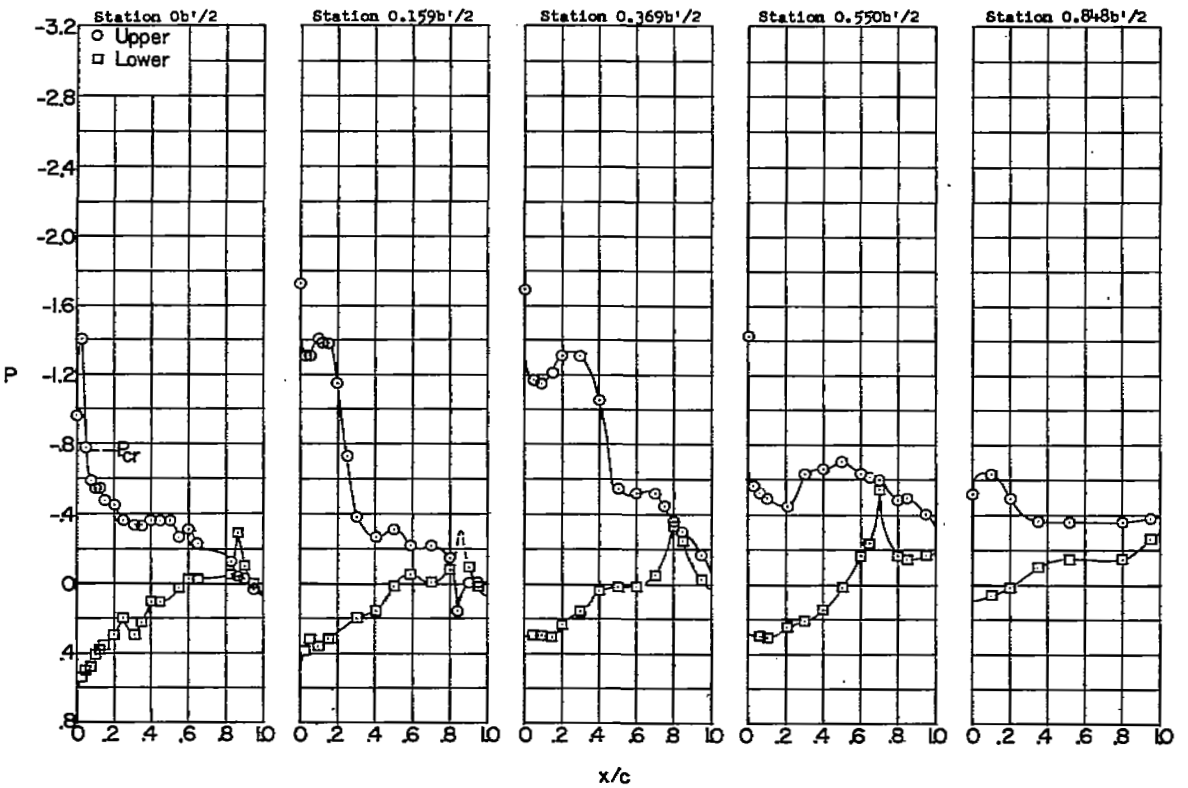

(e) $C_{N_A} = 0.52$; $\alpha = 13.6^{\circ}$; $\delta_{e_L} = 5.3^{\circ}$ up.

Figure 5.- Continued.

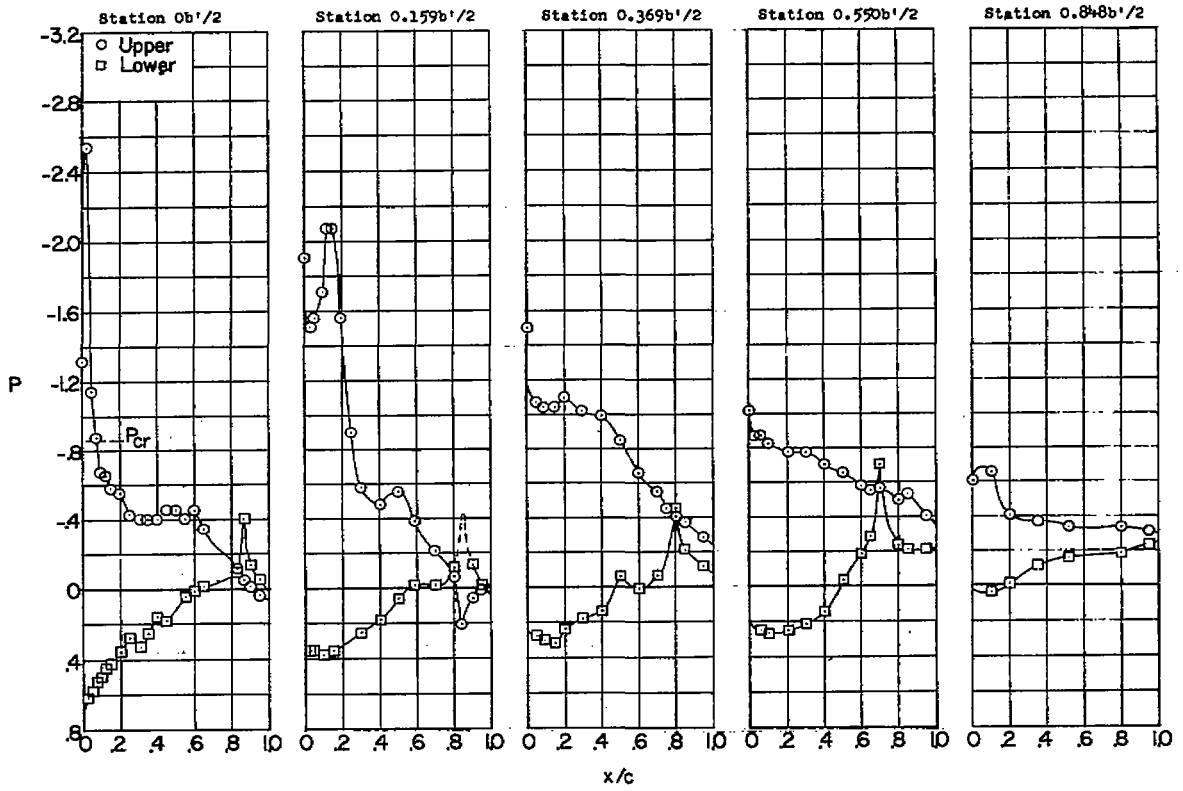

(f) $C_{N_A} = 0.61$; $\alpha = 16.1^{\circ}$; $\delta_{e_L} = 7.8^{\circ}$ up.

Figure 5.- Continued.

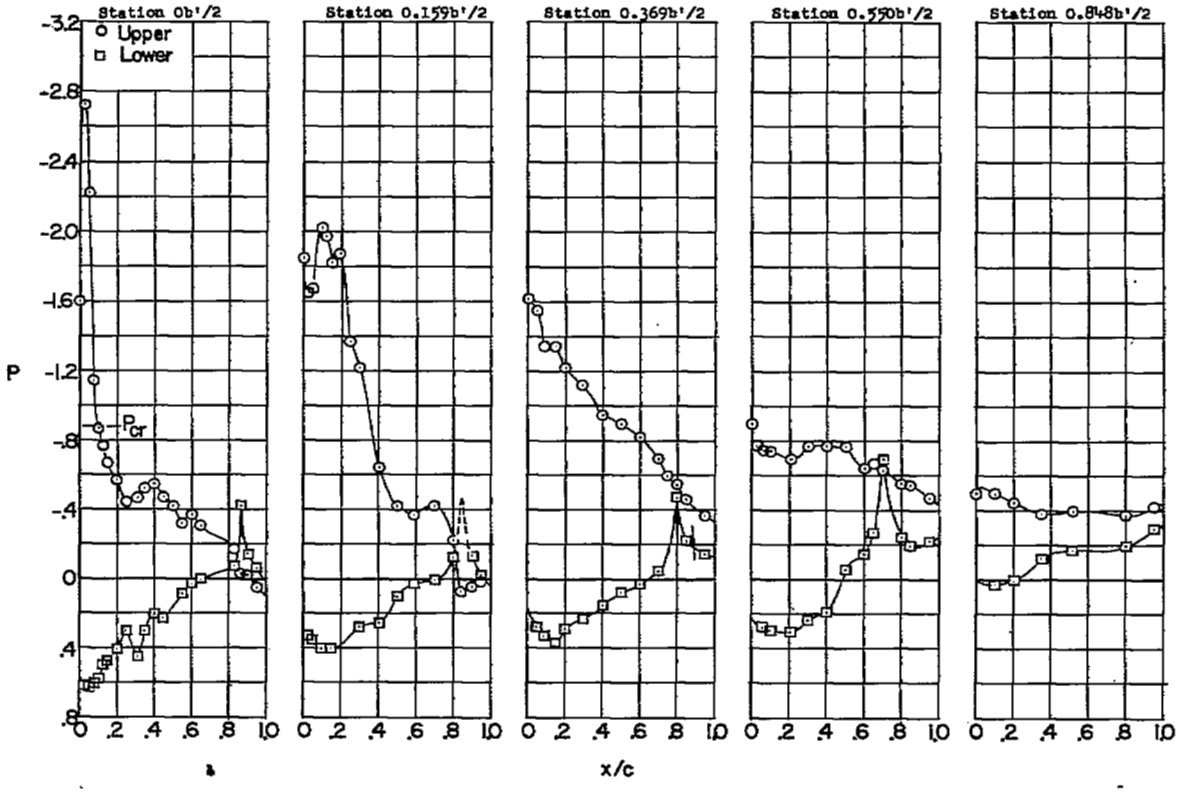

(g) $C_{N_A} = 0.70$; $\alpha = 18.2^{\circ}$; $\delta_{e_L} = 7.8^{\circ}$ up.

Figure 5.- Concluded.

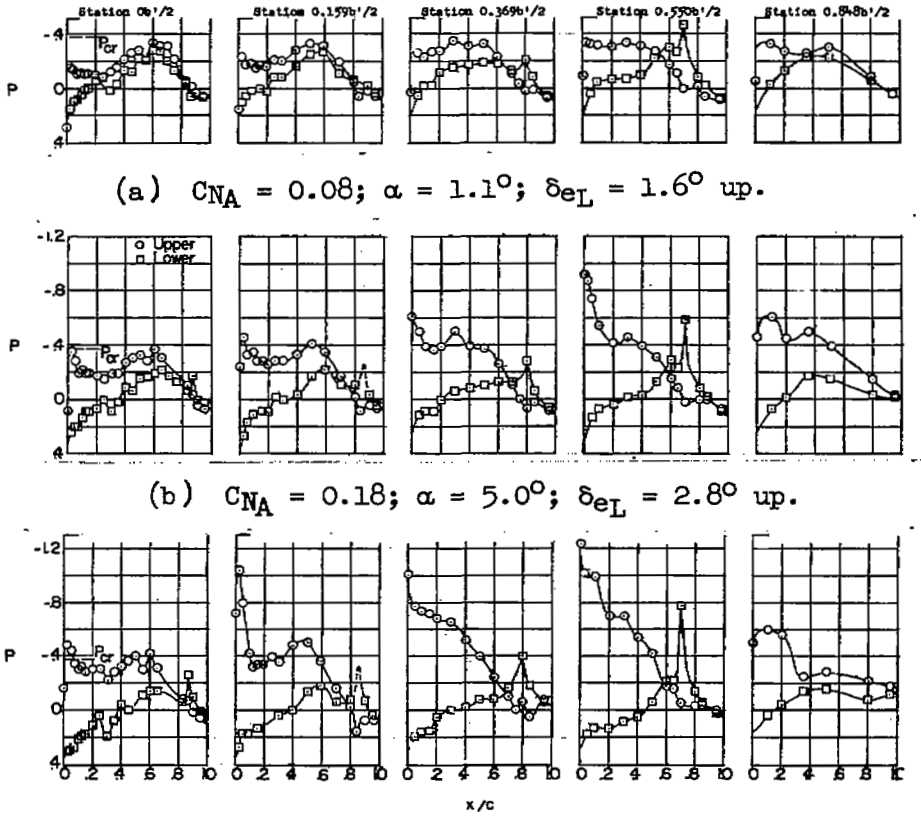

(a) $C_{N_A} = 0.08$; $\alpha = 1.1^{\circ}$; $\delta_{e_L} = 1.6^{\circ}$ up.

(b) $C_{N_A} = 0.18$; $\alpha = 5.0^{\circ}$; $\delta_{e_L} = 2.8^{\circ}$ up.

(c) $C_{N_A} = 0.30$; $\alpha = 7.2^{\circ}$; $\delta_{e_L} = 4.2^{\circ}$ up.

Figure 6.- Pressure distribution over the wing at five semispan stations for several values of airplane normal-force coefficient. M = 0.82 ± 0.02. XF-92A airplane.

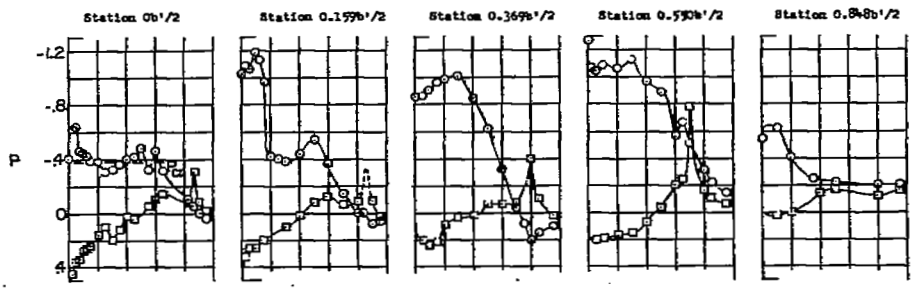

(d) $C_{N_A} = 0.40$; $\alpha = 9.9^{\circ}$; $\delta_{e_L} = 4.5^{\circ}$ up.

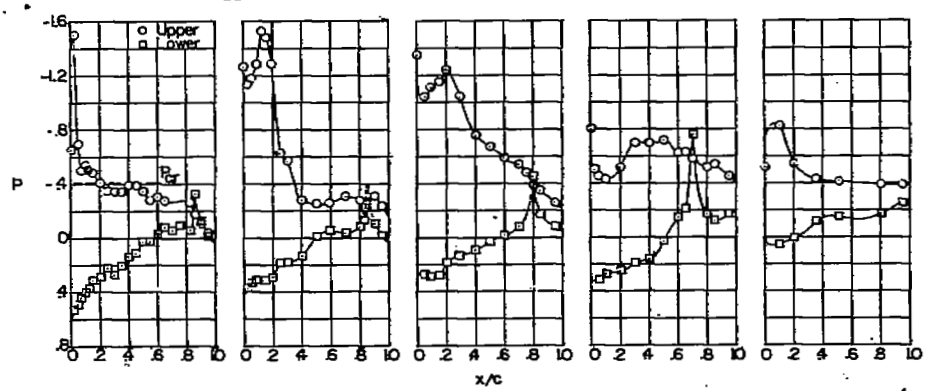

(e) $C_{N_A} = 0.51$; $\alpha = 12.9^{\circ}$; $\delta_{e_L} = 4.5^{\circ}$ up.

Figure 6.- Continued.

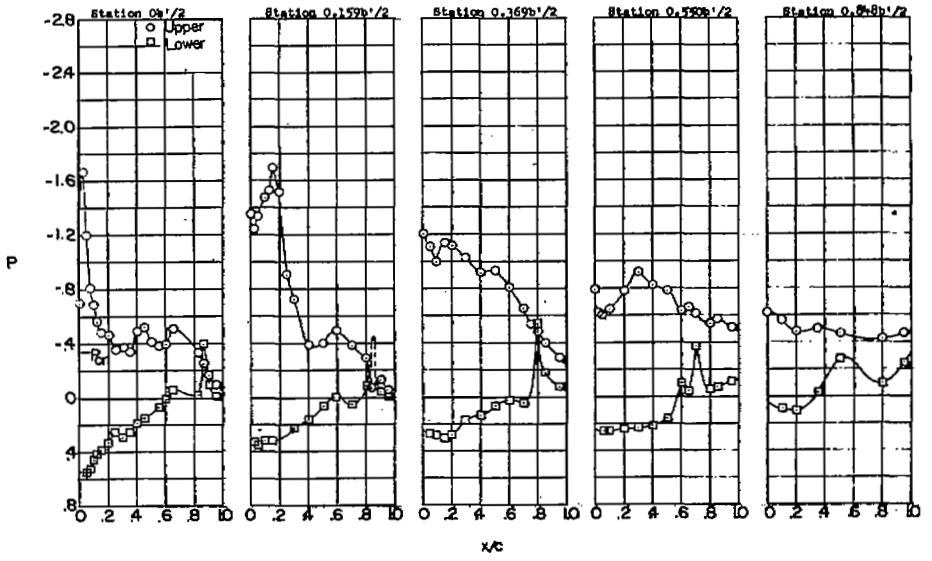

(f) $C_{N_A} = 0.65$; $\alpha = 14.9^{\circ}$; $\delta_{e_L} = 2.2^{\circ}$ up.

Figure 6.- Concluded.

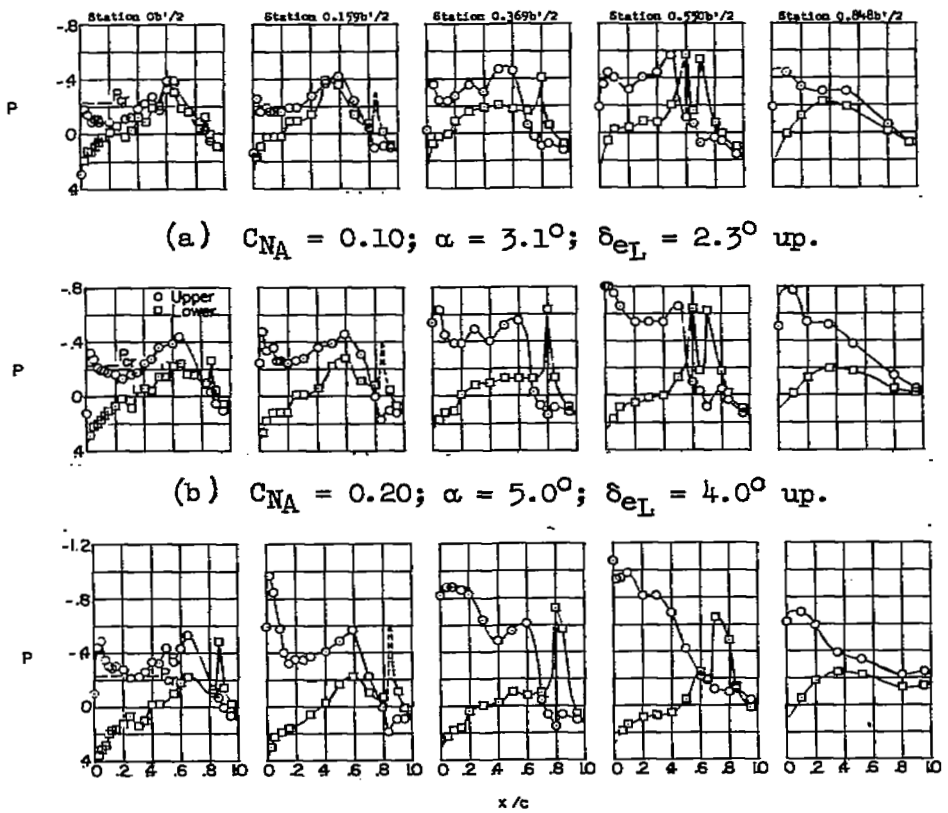

(a) $C_{N_A} = 0.10$; $\alpha = 3.1^{\circ}$; $\delta_{e_L} = 2.3^{\circ}$ up.

(b) $C_{N_A} = 0.20$; $\alpha = 5.0^{\circ}$; $\delta_{e_L} = 4.0^{\circ}$ up.

(c) $C_{N_A} = 0.30$; $\alpha = 7.2^{\circ}$; $\delta_{e_L} = 5.2^{\circ}$ up.

Figure 7.- Pressure distribution over the wing at five semispan stations for several values of airplane normal-force coefficient. $M = 0.88 \pm 0.01$. XF-92A airplane.

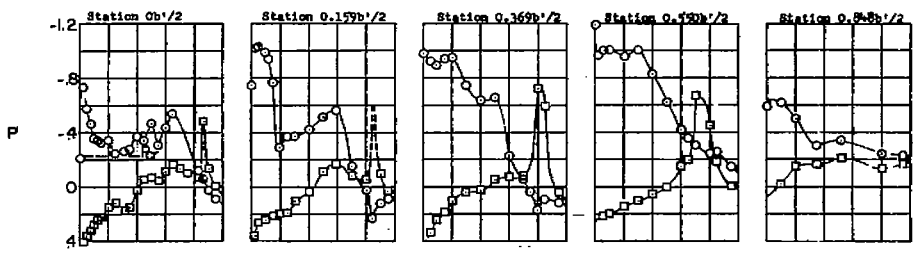

(d) $C_{N_A} = 0.38$; $\alpha = 9.1^{\circ}$; $\delta_{e_L} = 5.5^{\circ}$ up.

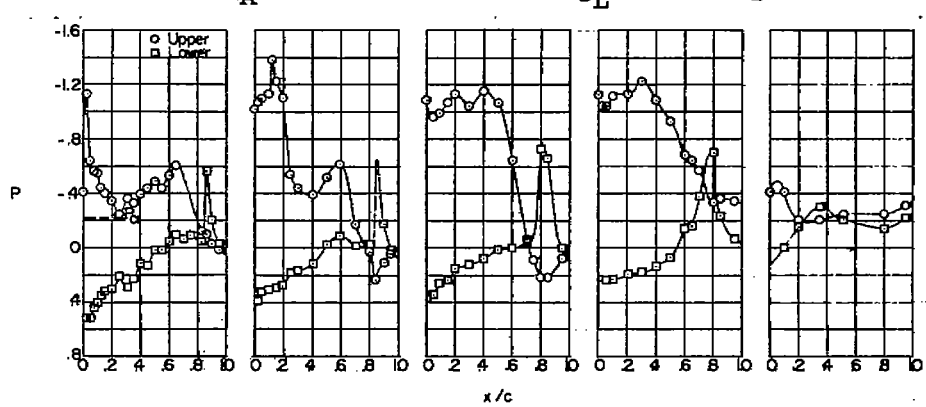

(e) $C_{N_A} = 0.50$; $\alpha = 11.4^{\circ}$; $\delta_{e_L} = 5.6^{\circ}$ up.

Figure 7.- Continued.

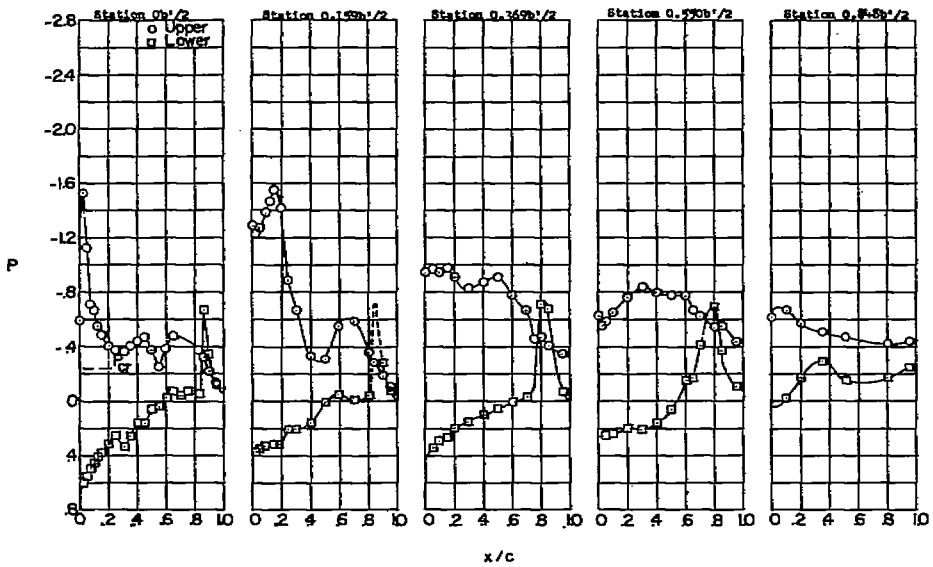

(f) $C_{N_A} = 0.66$; $\alpha = 14.8^{\circ}$; $\delta_{e_L} = 1.6^{\circ}$ up.

Figure 7.- Concluded.

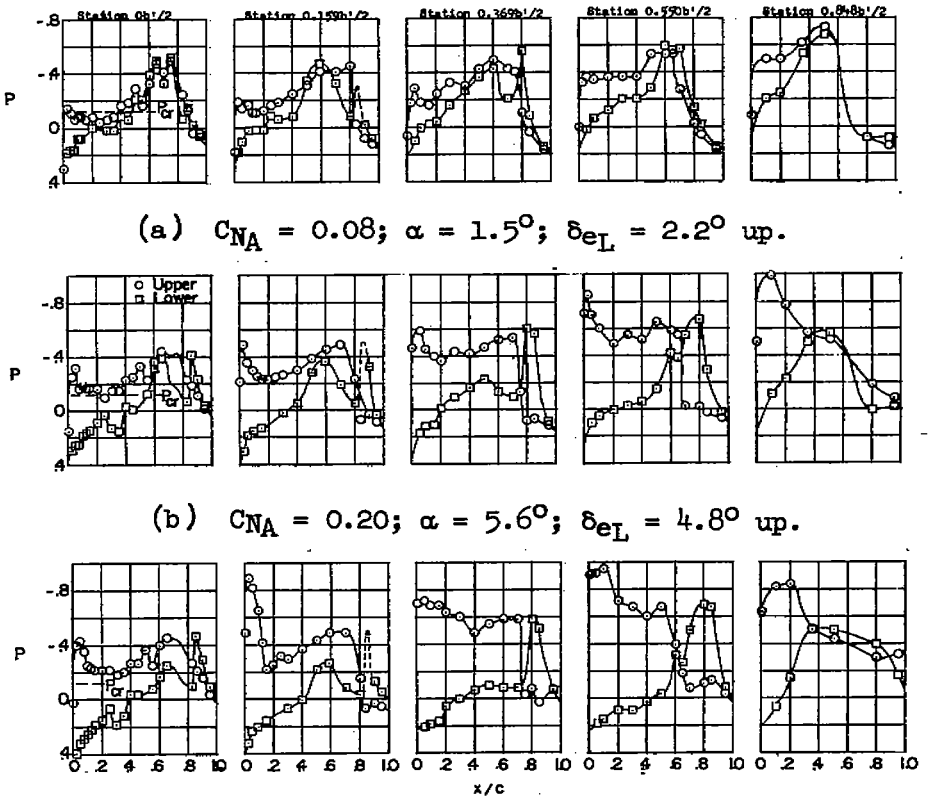

(a) $C_{N_A} = 0.08$; $\alpha = 1.5^{\circ}$; $\delta_{e_L} = 2.2^{\circ}$ up.

(b) $C_{N_A} = 0.20$; $\alpha = 5.6^{\circ}$; $\delta_{e_L} = 4.8^{\circ}$ up.

(c) $C_{N_A} = 0.30$; $\alpha = 7.4^{\circ}$; $\delta_{e_L} = 5.1^{\circ}$ up.

Figure 8.- Pressure distribution over the wing at five semispan stations for several values of airplane normal-force coefficient. M = 0.93 ± 0.01. XF-92A airplane.

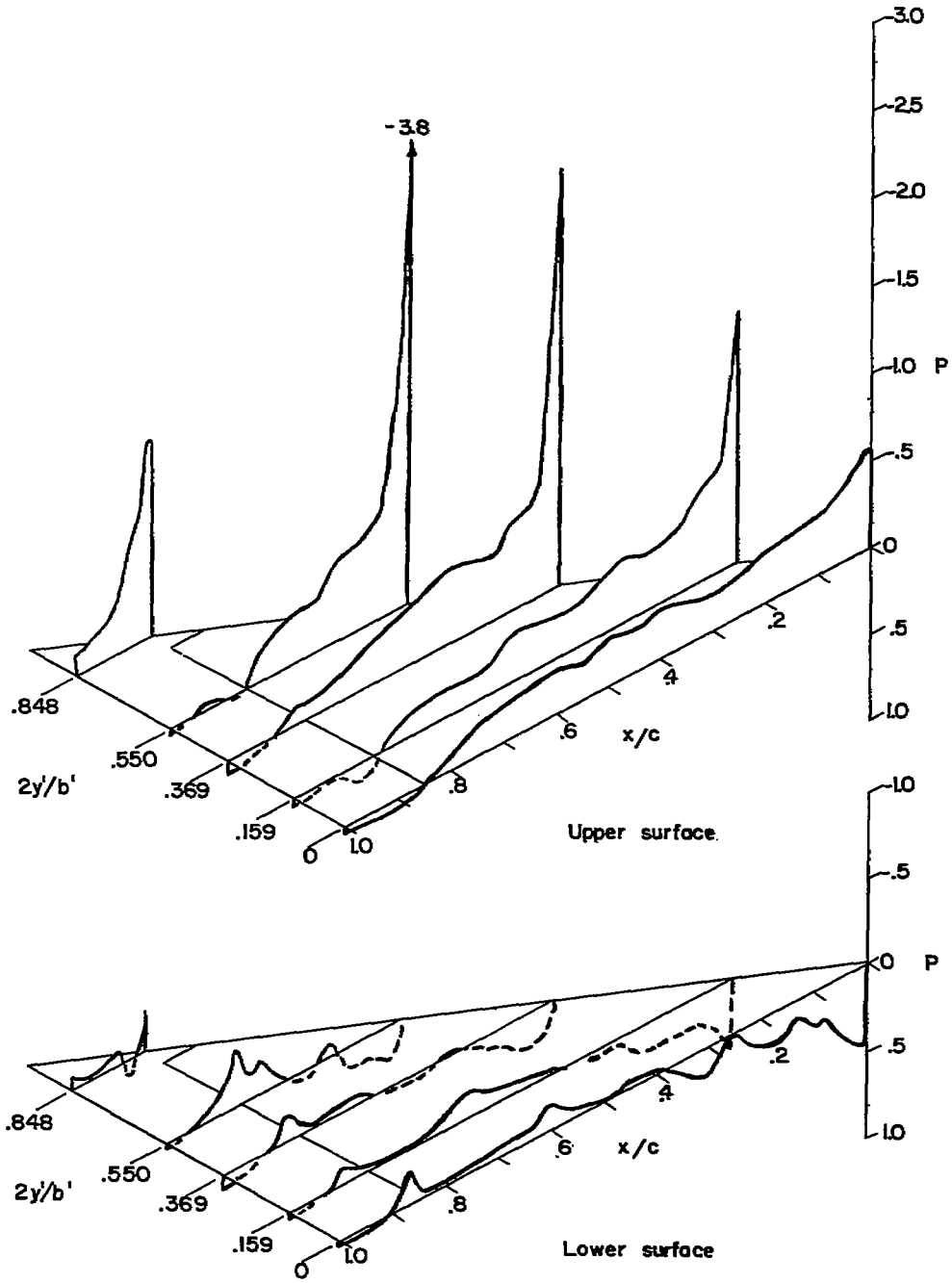

(a) $C_{N_A} = 0.29$.

Figure 9.- Isometric views of the chordwise distribution of pressure coefficient over the left wing at several values of airplane-normal-force coefficient. XF-92A airplane. Stall approach.

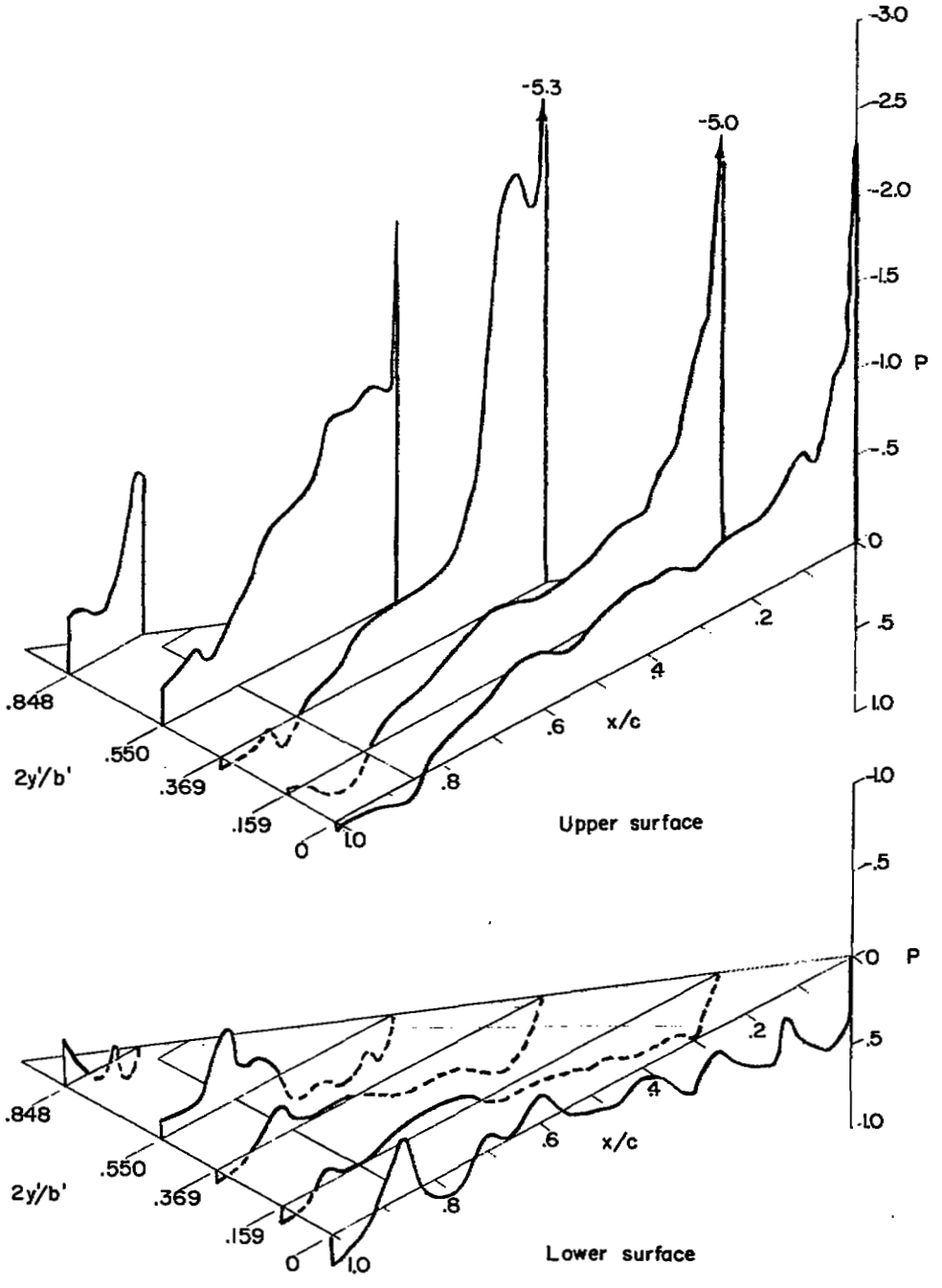

(b) $C_{N_A} = 0.50$.

Figure 9.- Concluded.

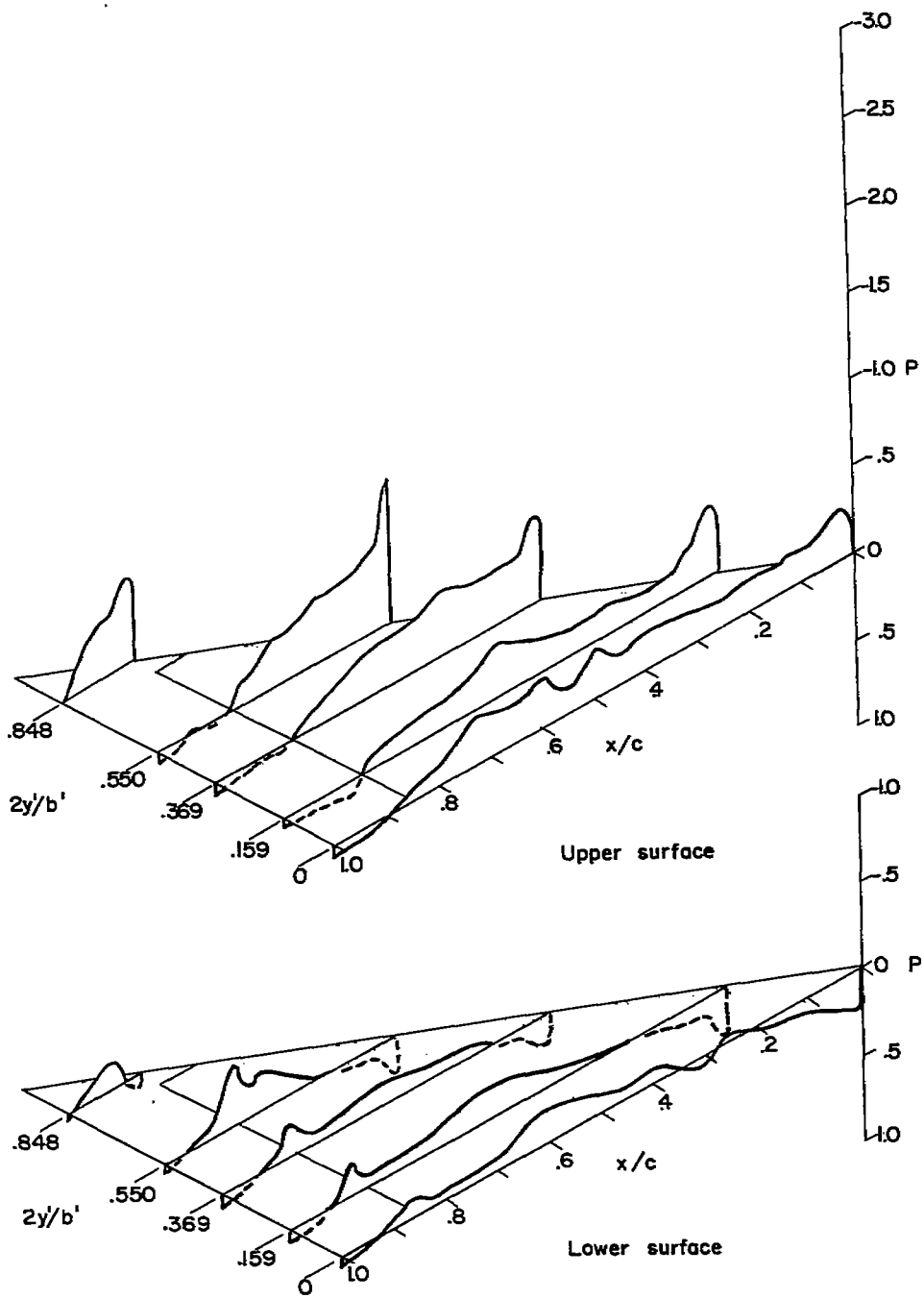

(a) $C_{N_A} = 0.14$.

Figure 10.- Isometric views of the chordwise distribution of pressure coefficient over the left wing at several values of airplane-normal-force coefficient. XF-92A airplane. $M \approx 0.70$.

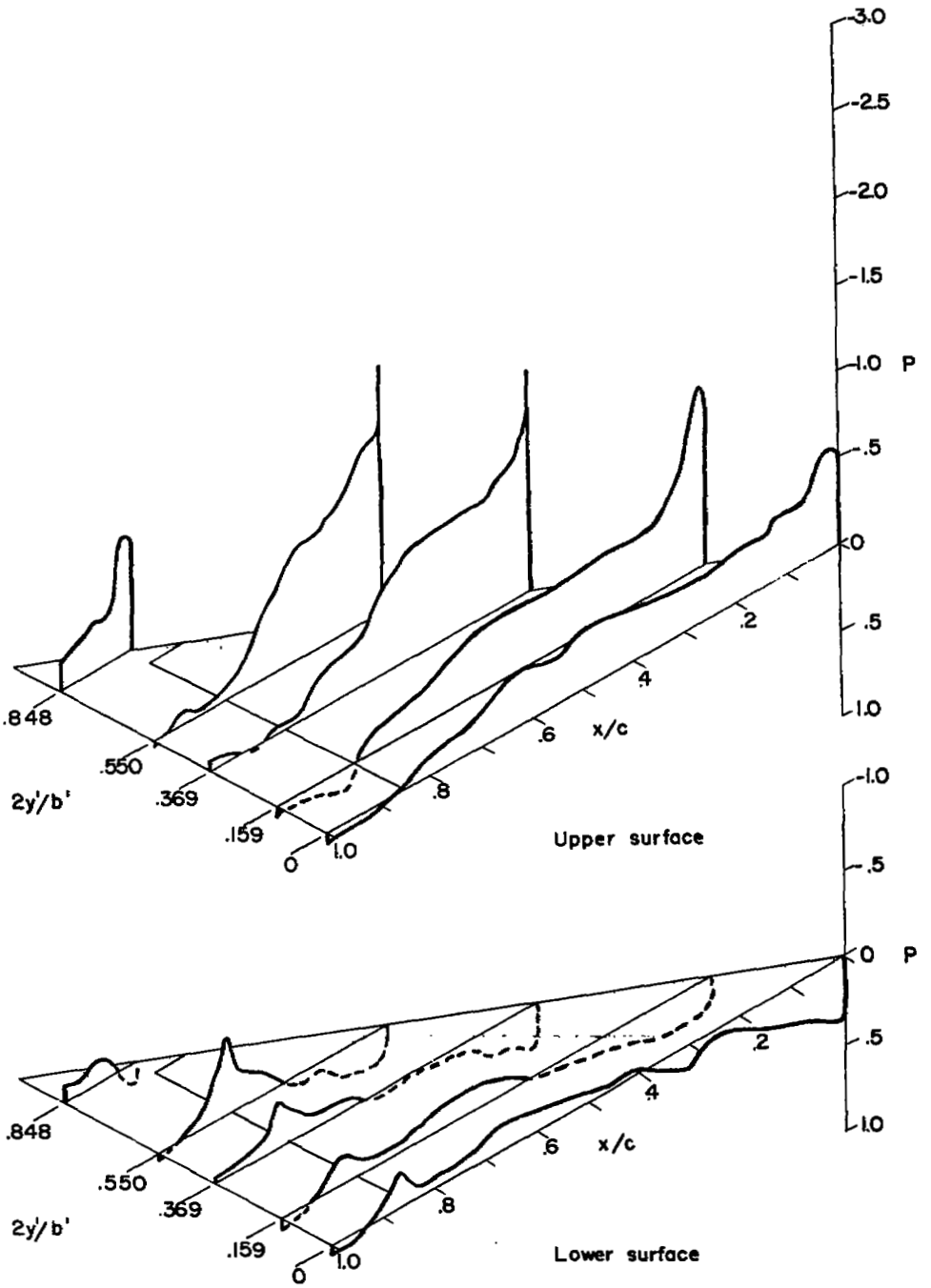

(b) $C_{N_A} = 0.30$.

Figure 10.- Continued.

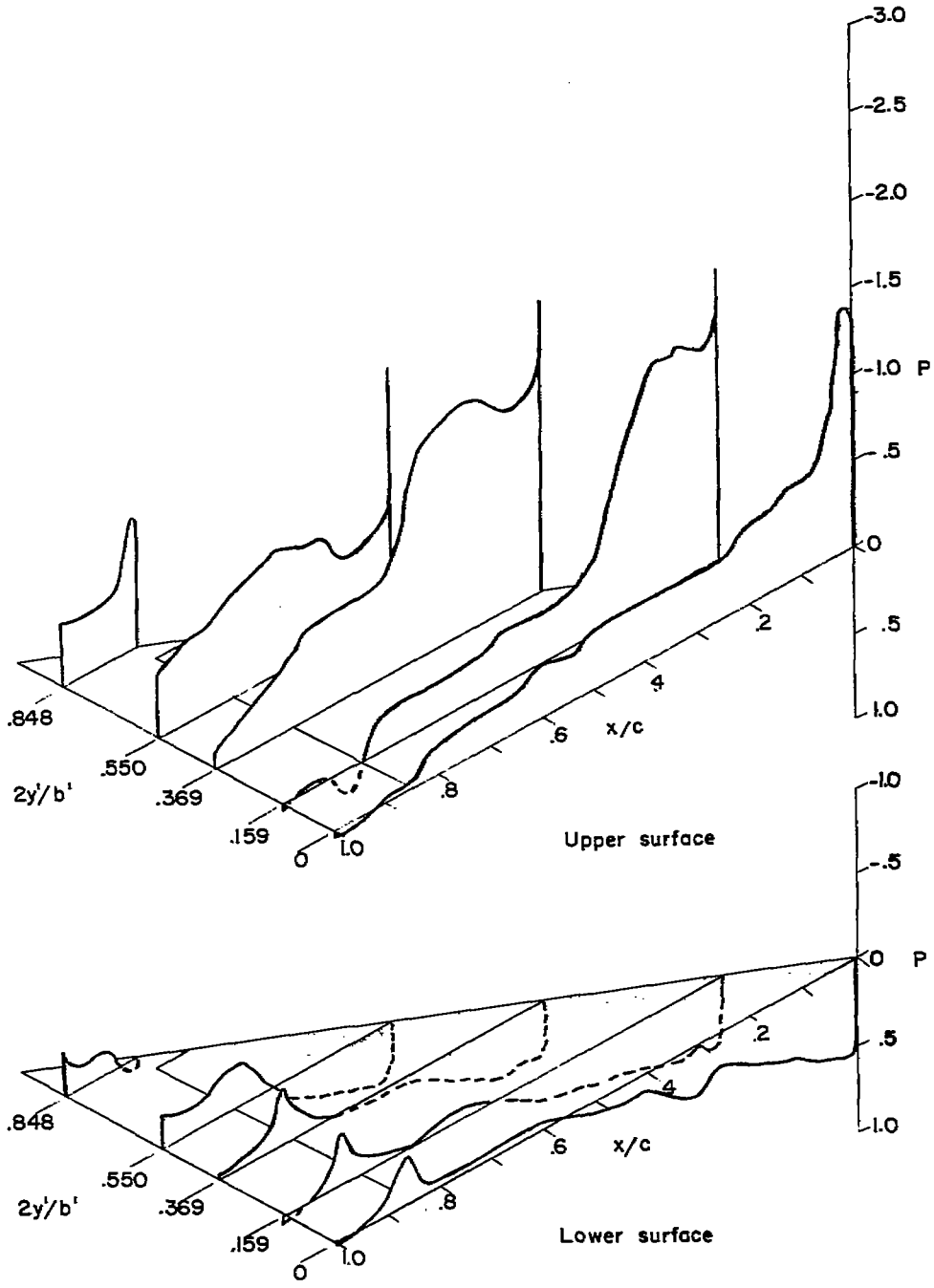

(c) $C_{N_A} = 0.52$.

Figure 10.- Continued.

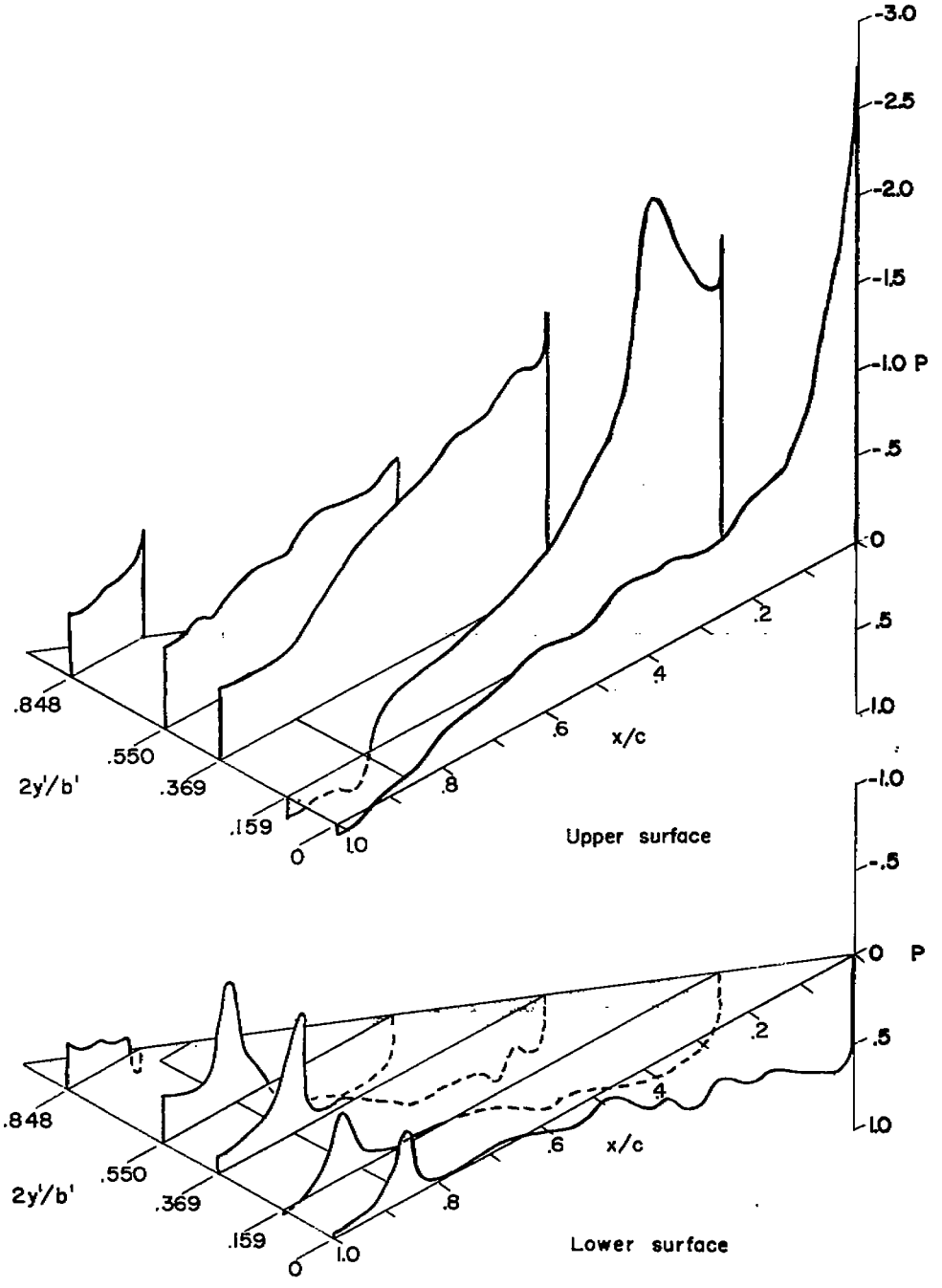

(d) $C_{N_A} = 0.66$.

Figure 10.- Concluded.

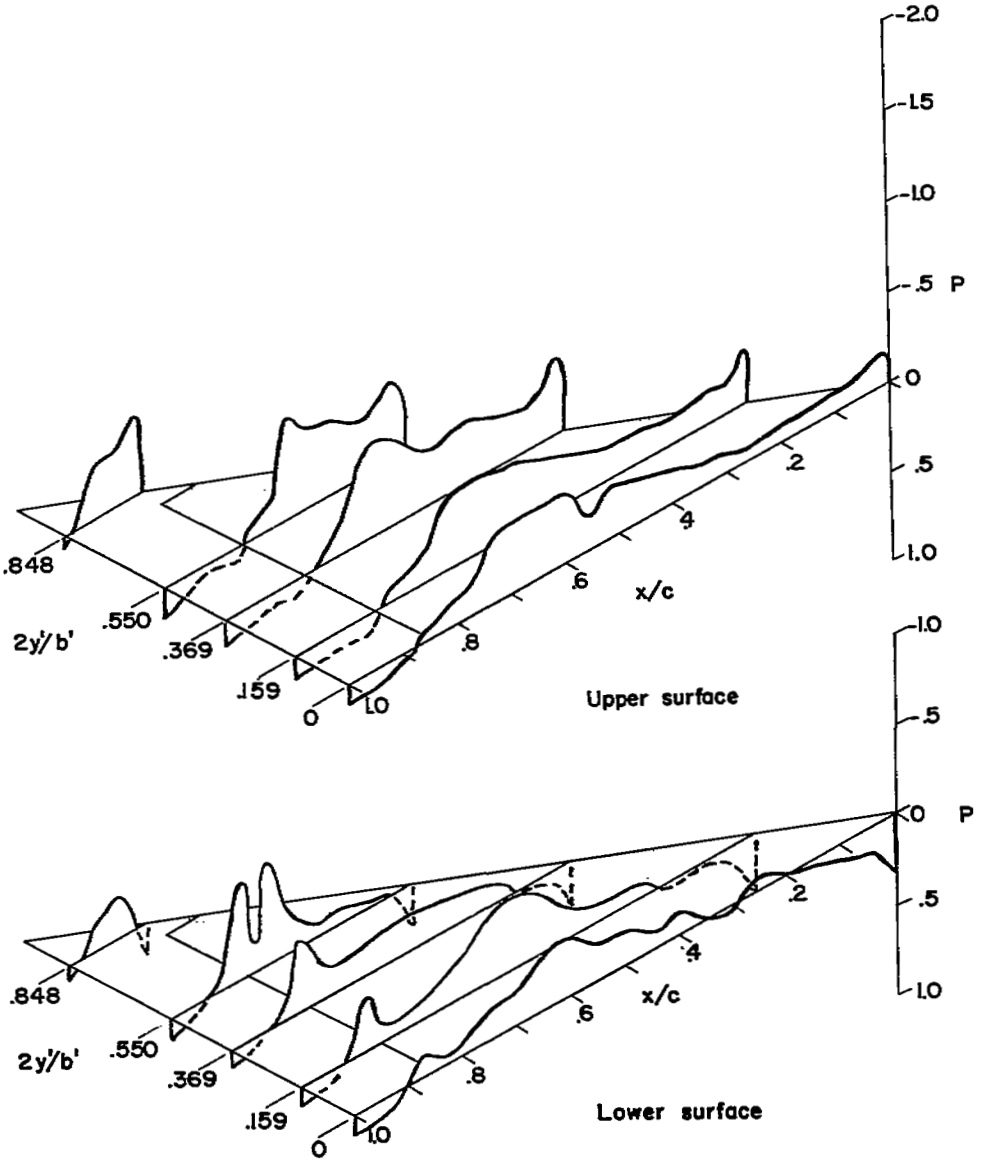

(a) $C_{N_A} = 0.10$.

Figure 11.- Isometric views of the chordwise distribution of pressure coefficient over the left wing at several values of airplane-normal-force coefficient. XF-92A airplane. $M \approx 0.88$.

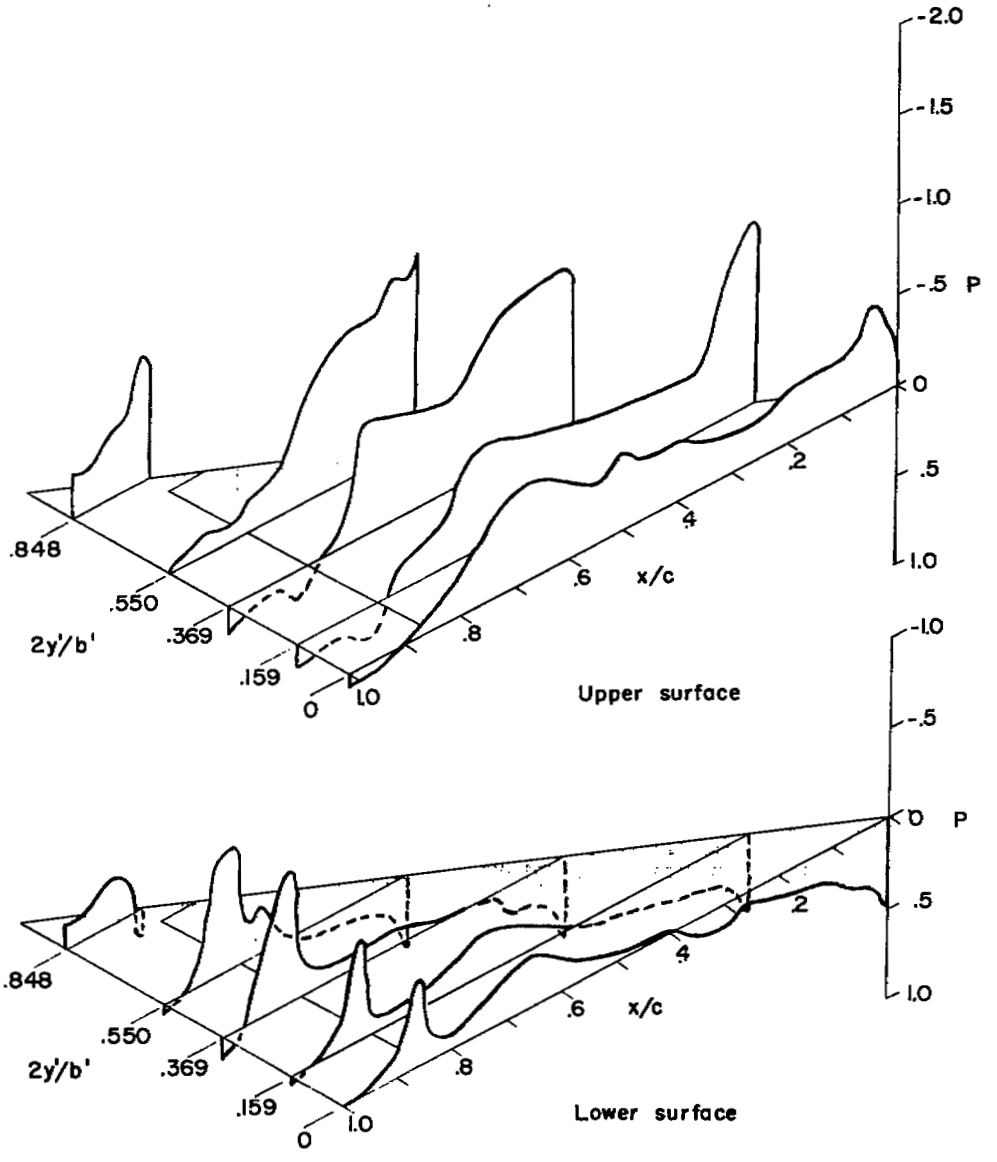

(b) $C_{N_A} = 0.30$.

Figure 11.- Continued.

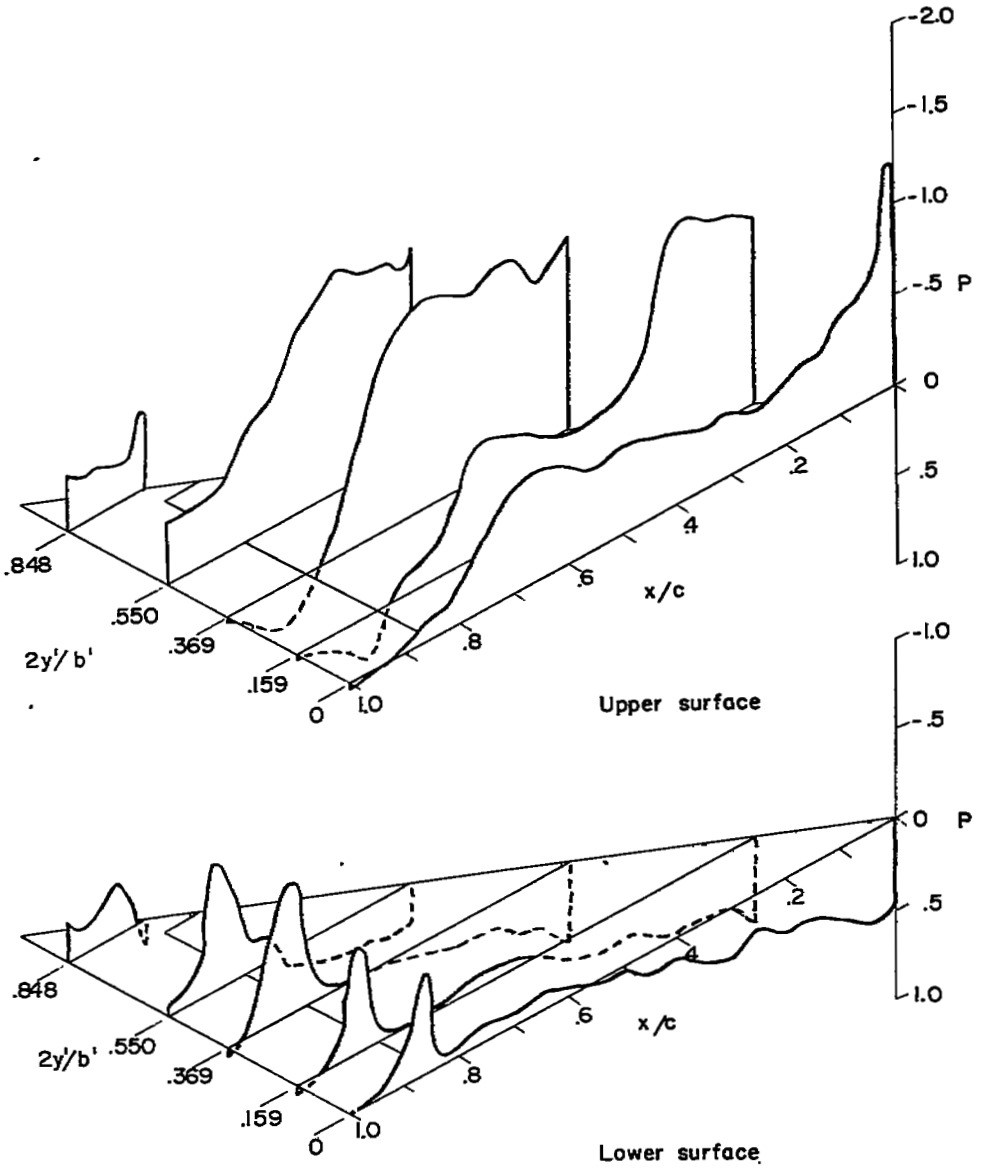

(c) $C_{N_A} = 0.50$.

Figure 11.- Continued.

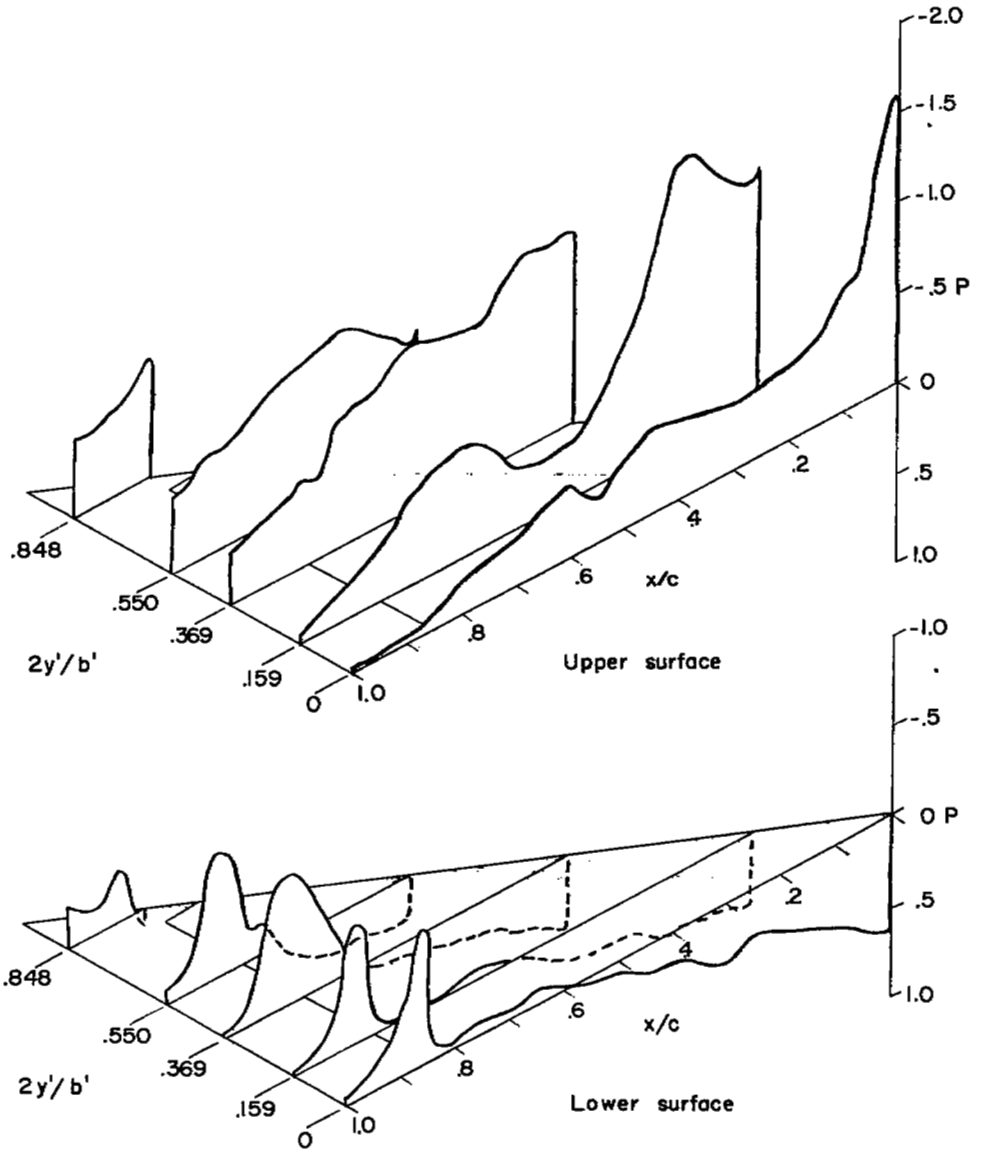

(d) $C_{N_A} = 0.66$.

Figure 11.- Concluded.

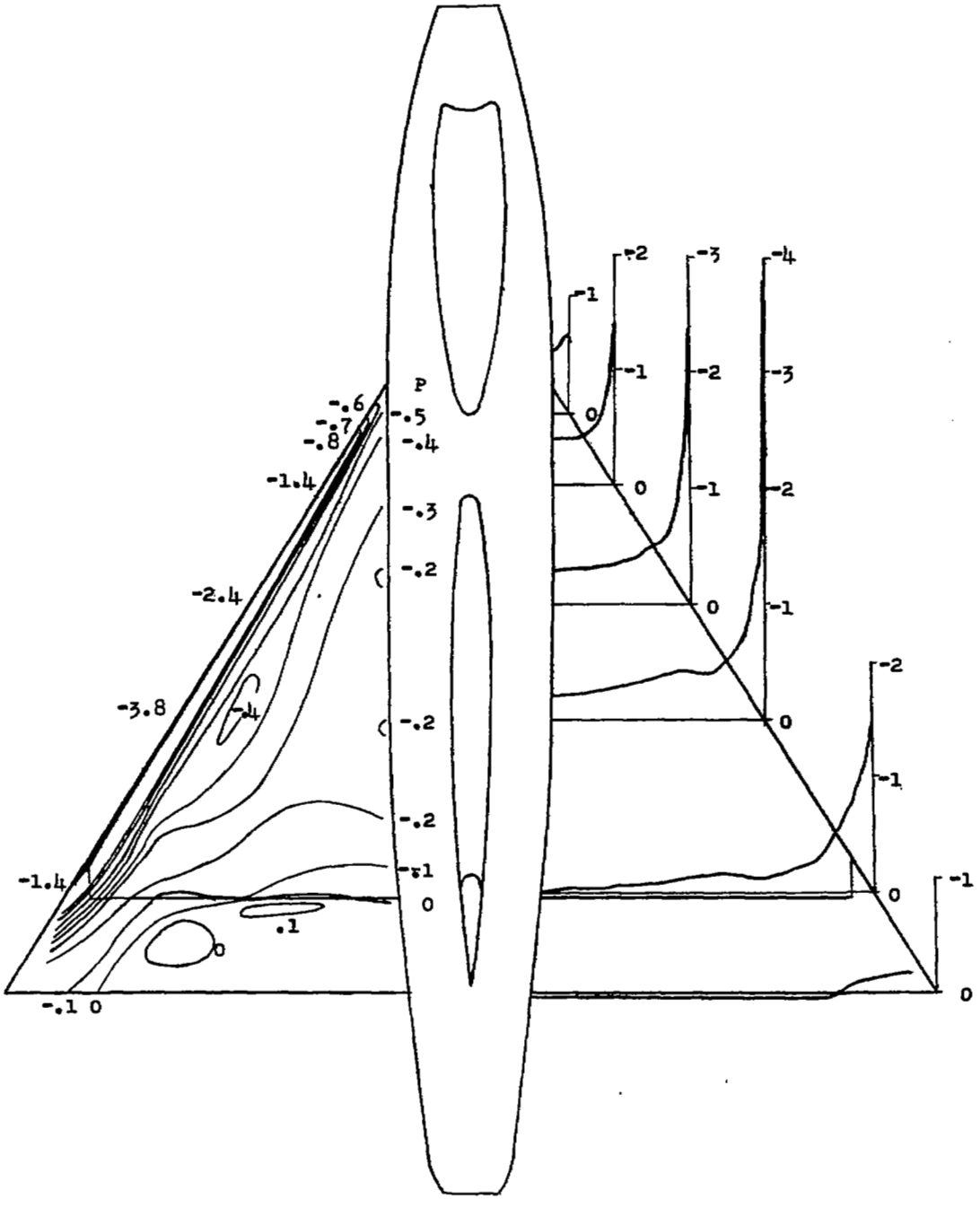

(a) $C_{N_A} = 0.29$.

Figure 12.- Pressure contours and spanwise pressure distributions for the upper surface. XF-92A airplane. Stall approach.

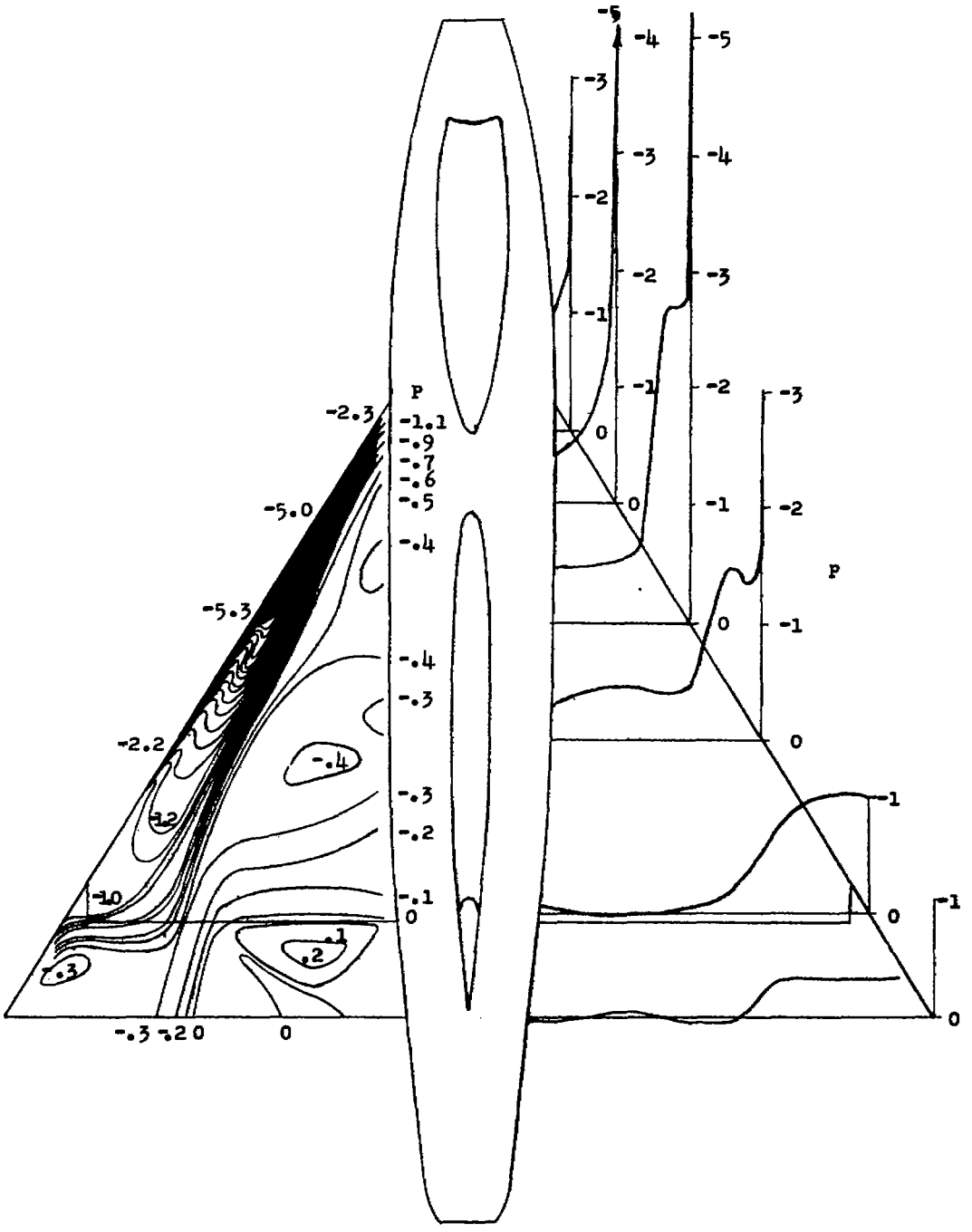

(b) $C_{N_A} = 0.50$.

Figure 12.- Concluded.

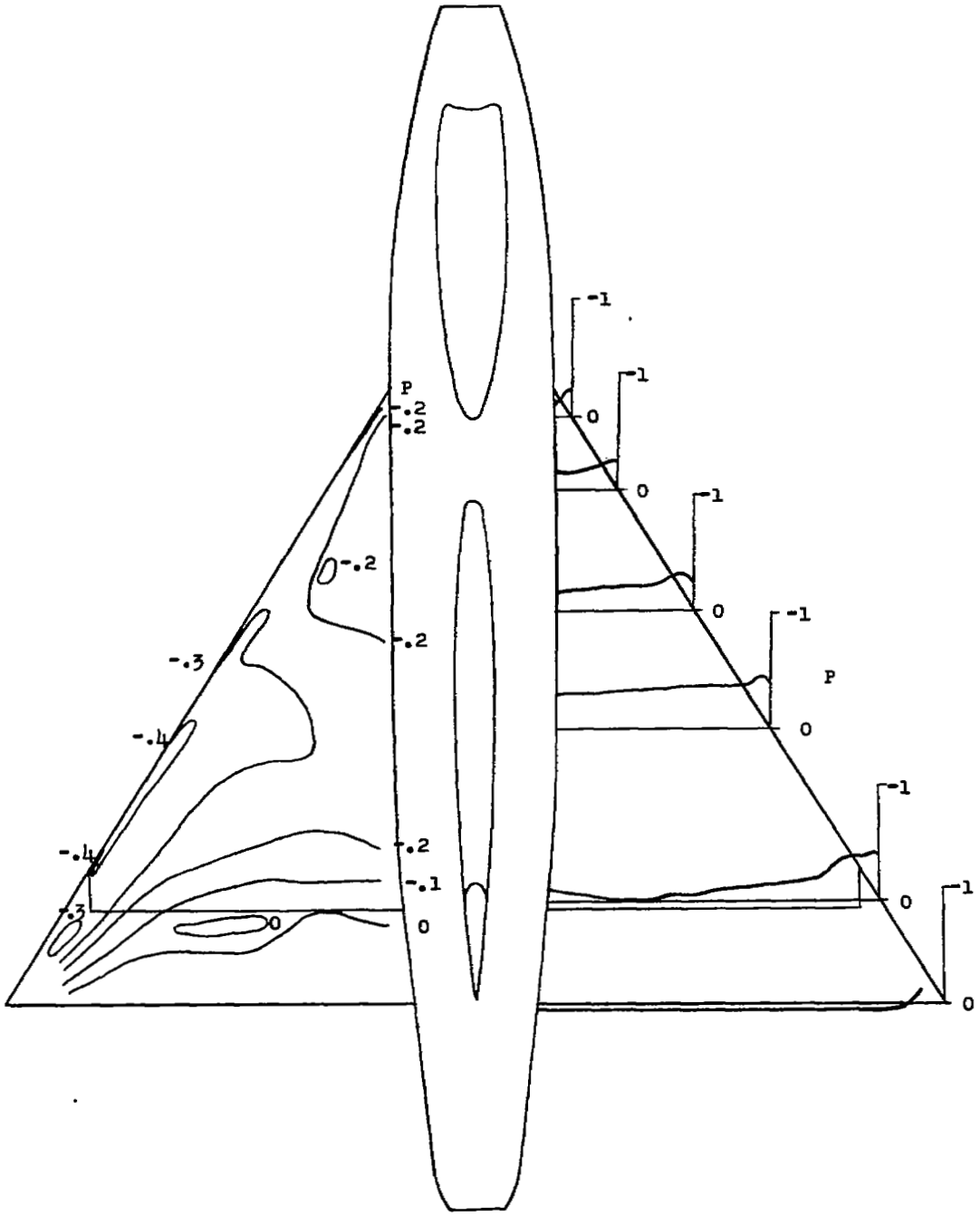

(a) $C_{N_A} = 0.14$.

Figure 13.- Pressure contours and spanwise pressure distributions for the upper surface. XF-92A airplane. $\bar{M} \approx 0.70$.

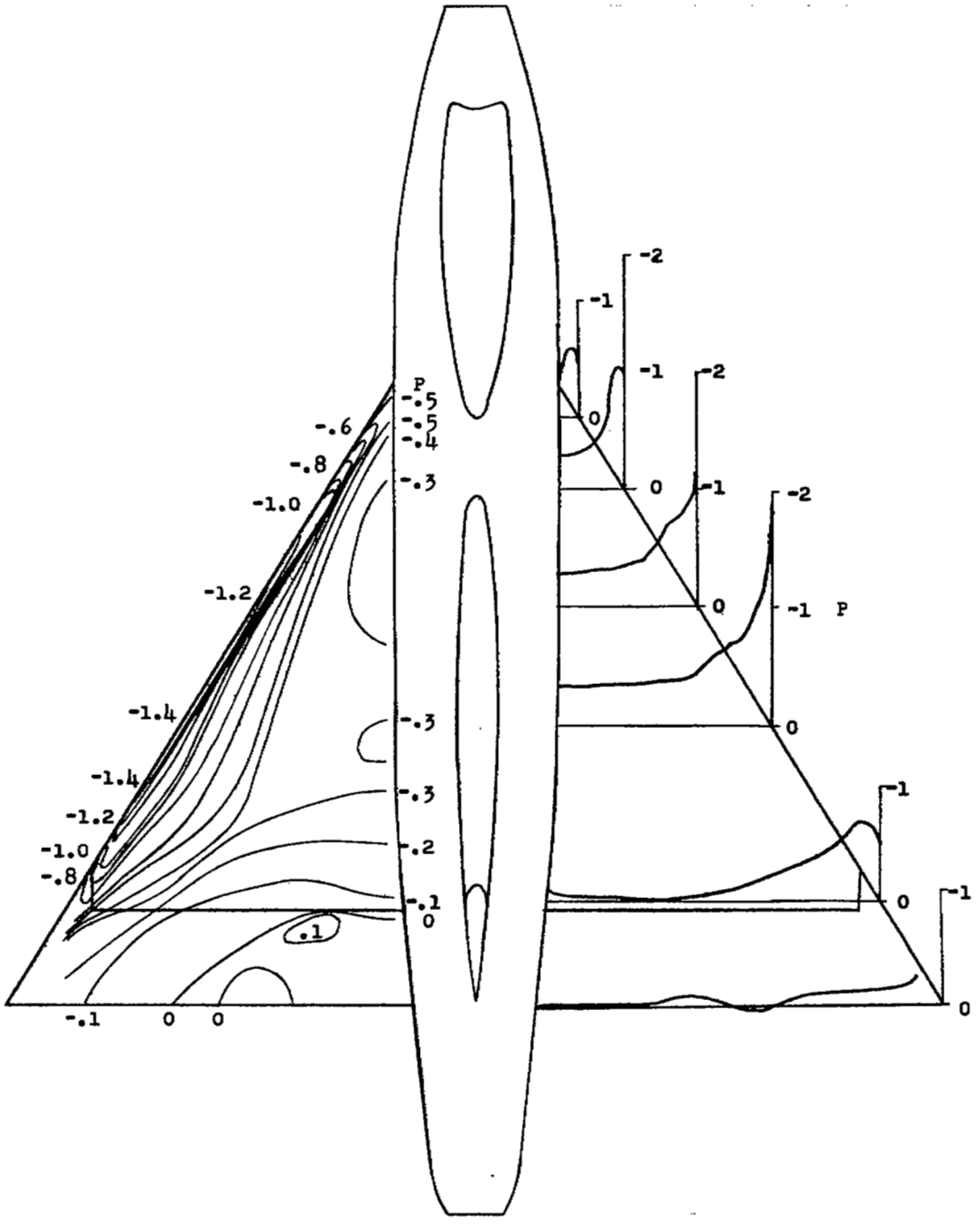

(b) $C_{N_A} = 0.30$.

Figure 13.- Continued.

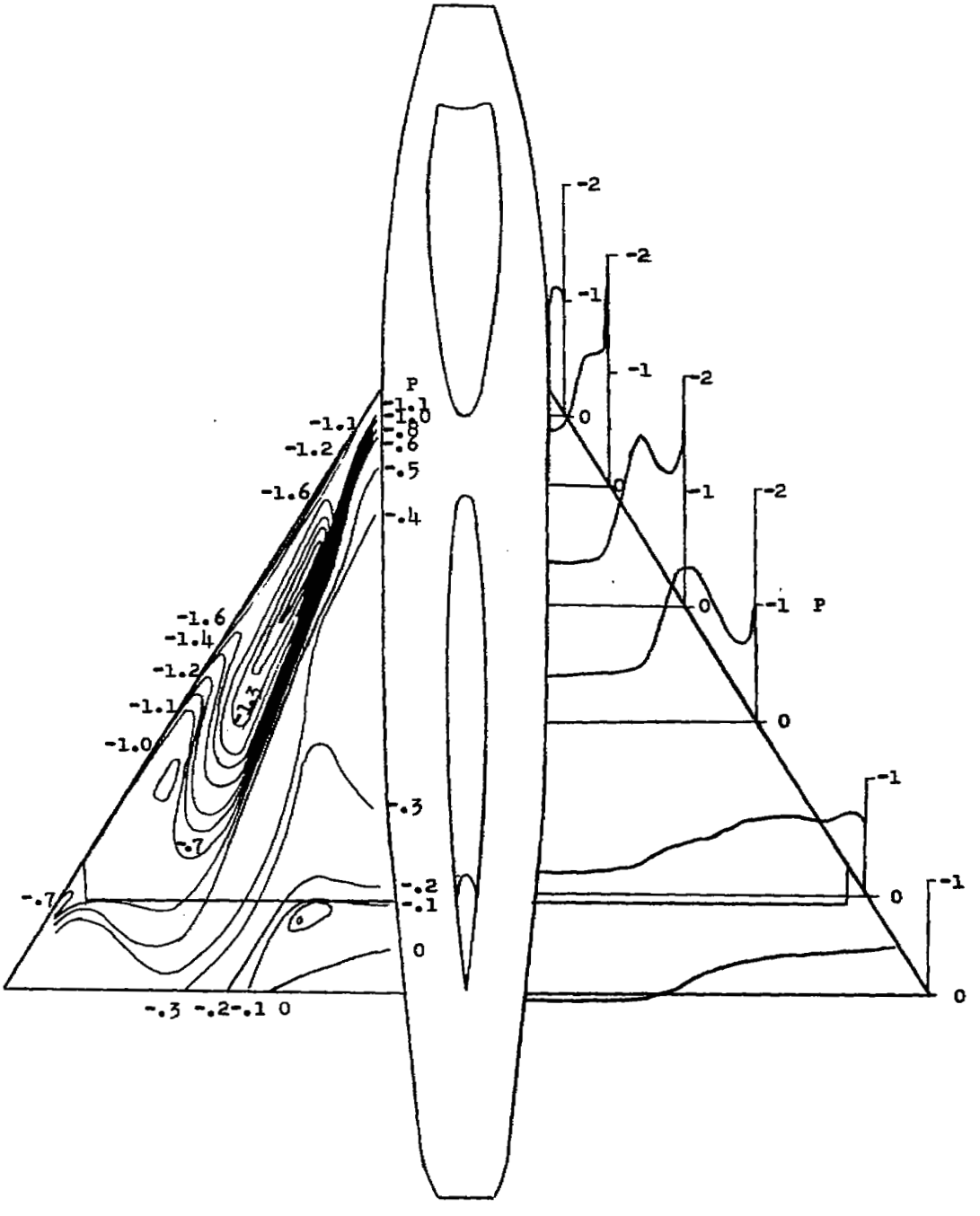

(c) $C_{N_A} = 0.52$.

Figure 13.- Continued.

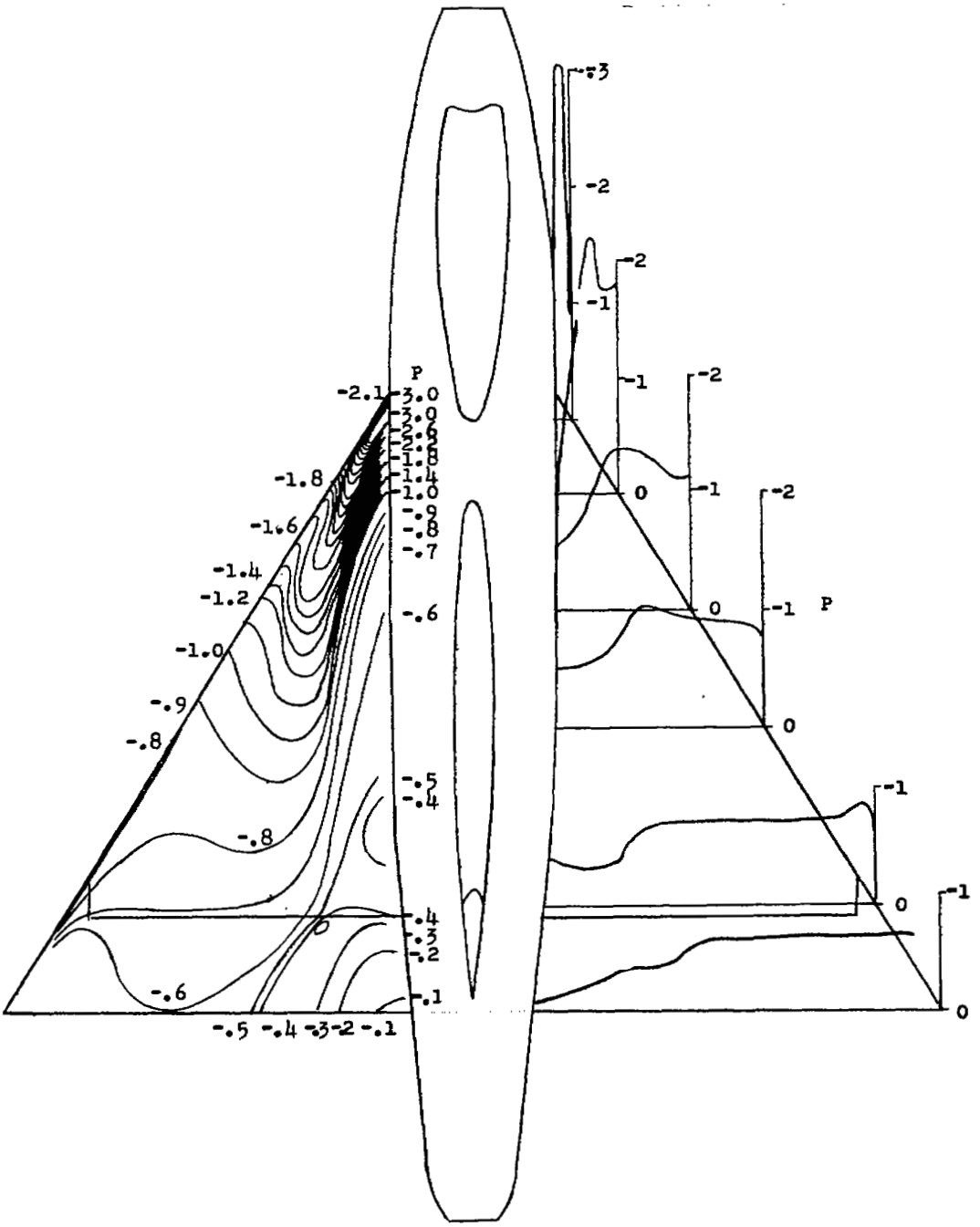

(d) $C_{N_A} \approx 0.70$.

Figure 13.- Concluded.

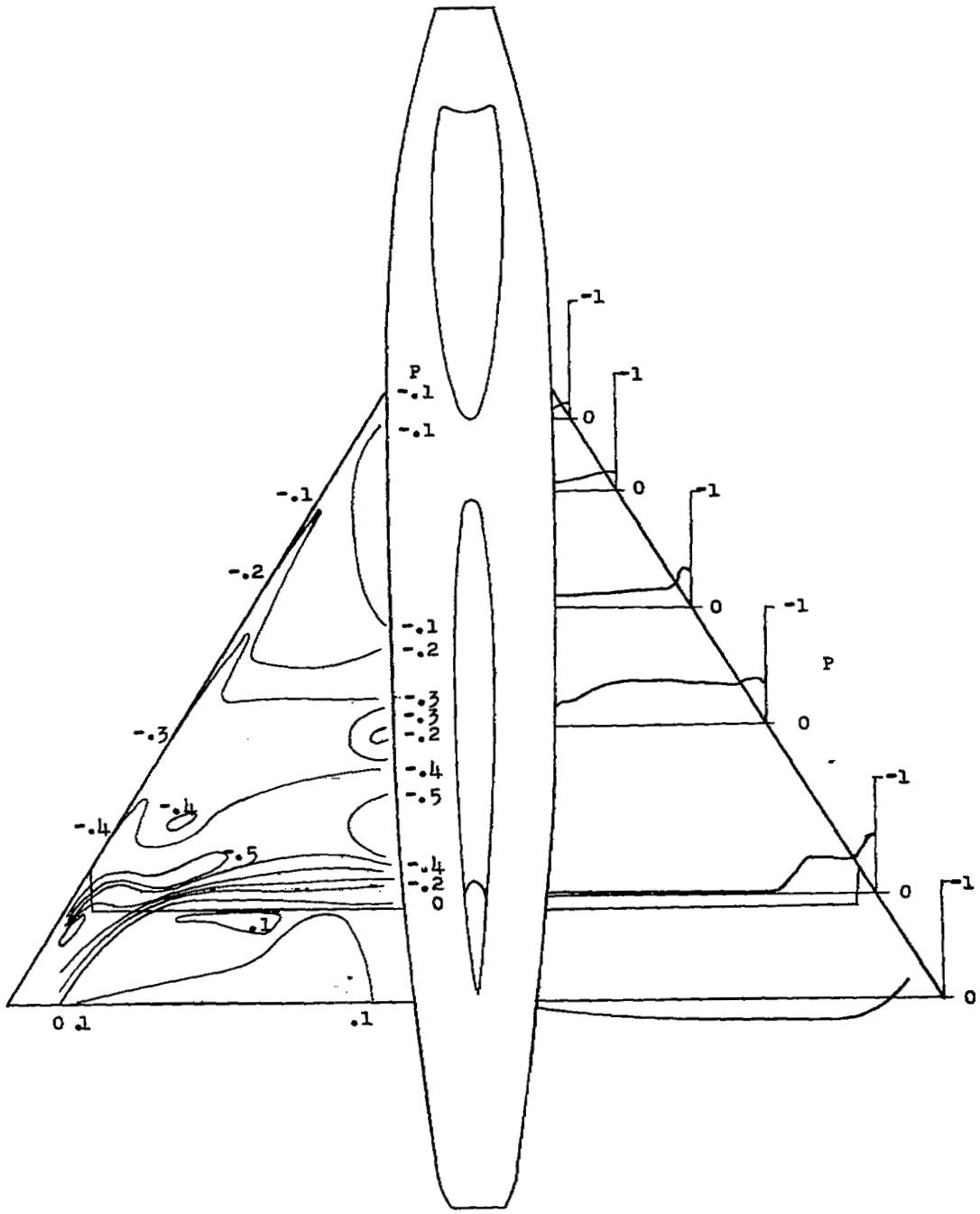

(a) $C_{N_A} = 0.10$.

Figure 14.- Pressure contours and spanwise pressure distributions for the upper surface. XF-92A airplane. $M \approx 0.88$.

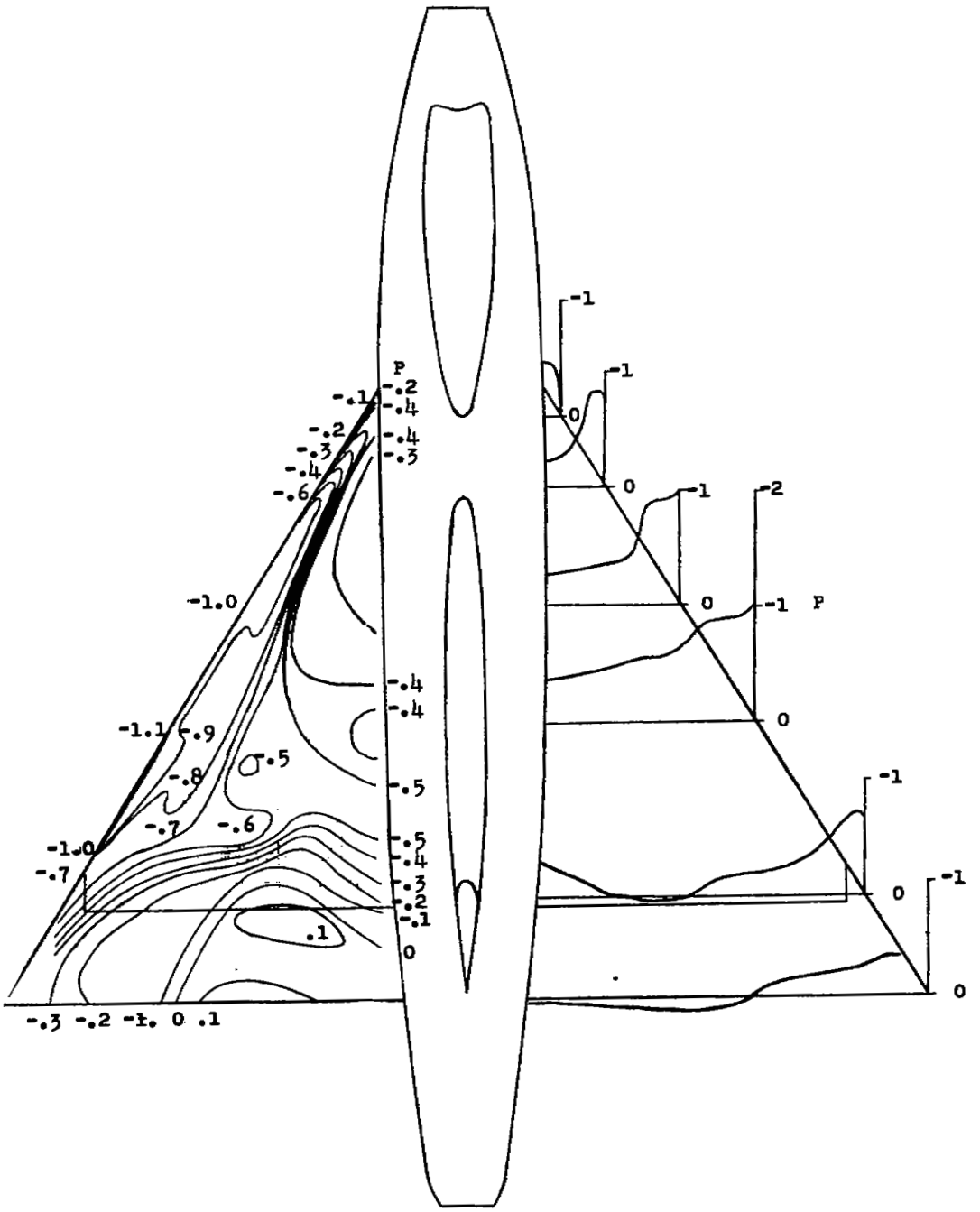

(b) $C_{N_A} = 0.30$.

Figure 14.- Continued.

[redacted]

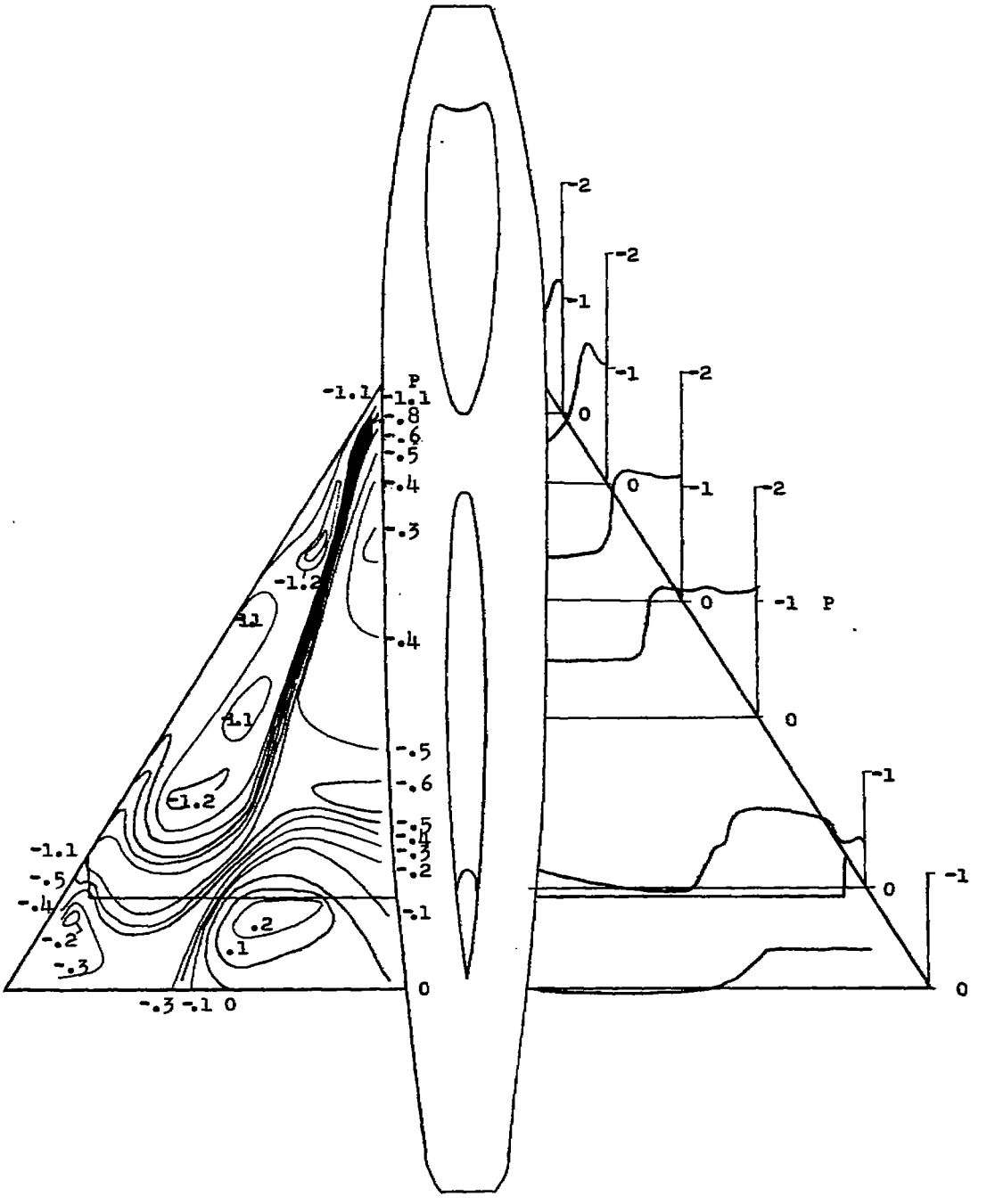

(c) $C_{N_A} = 0.50$.

Figure 14.- Continued.

[redacted]

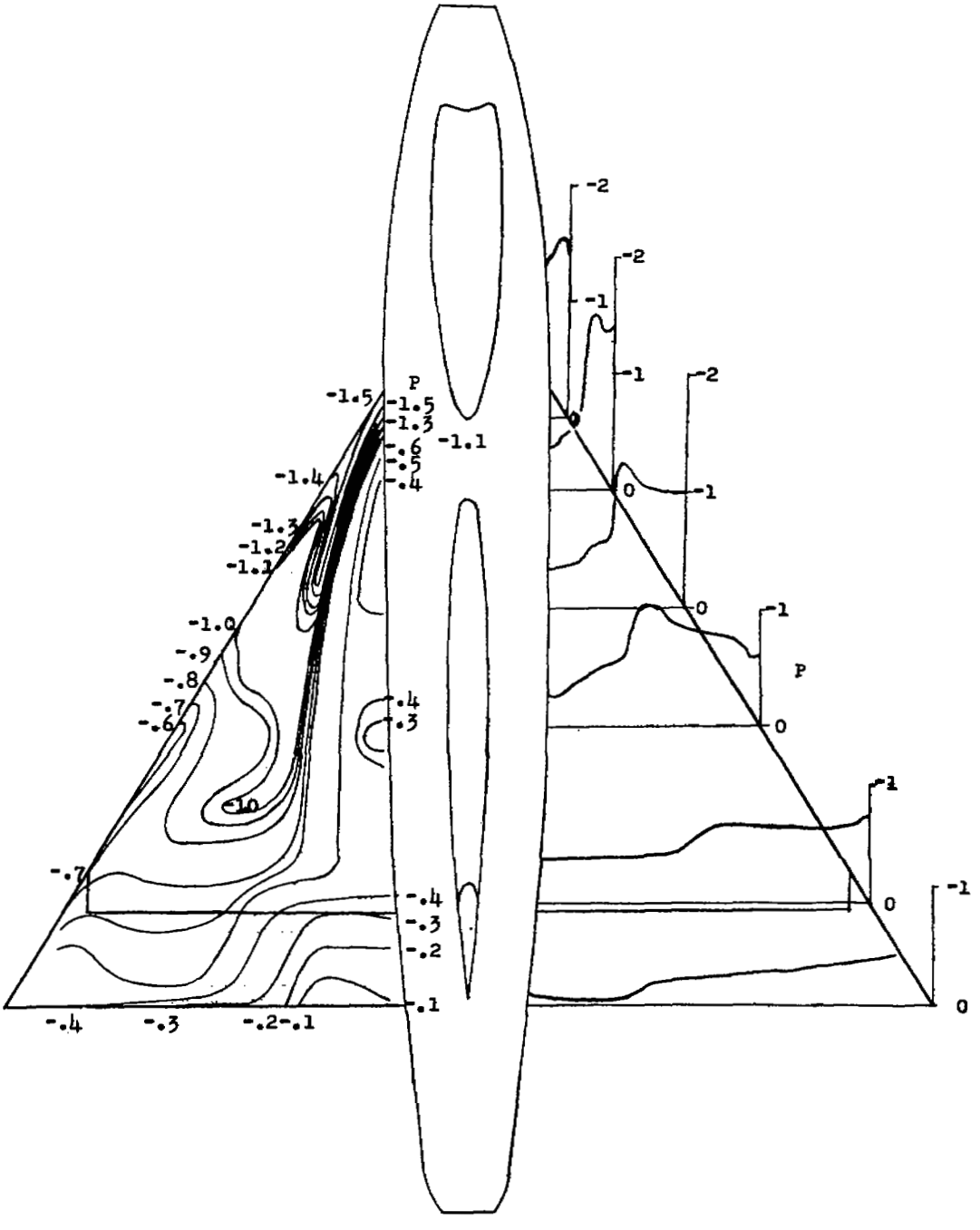

(d) $C_{N_A} = 0.66$.

Figure 14.- Concluded.

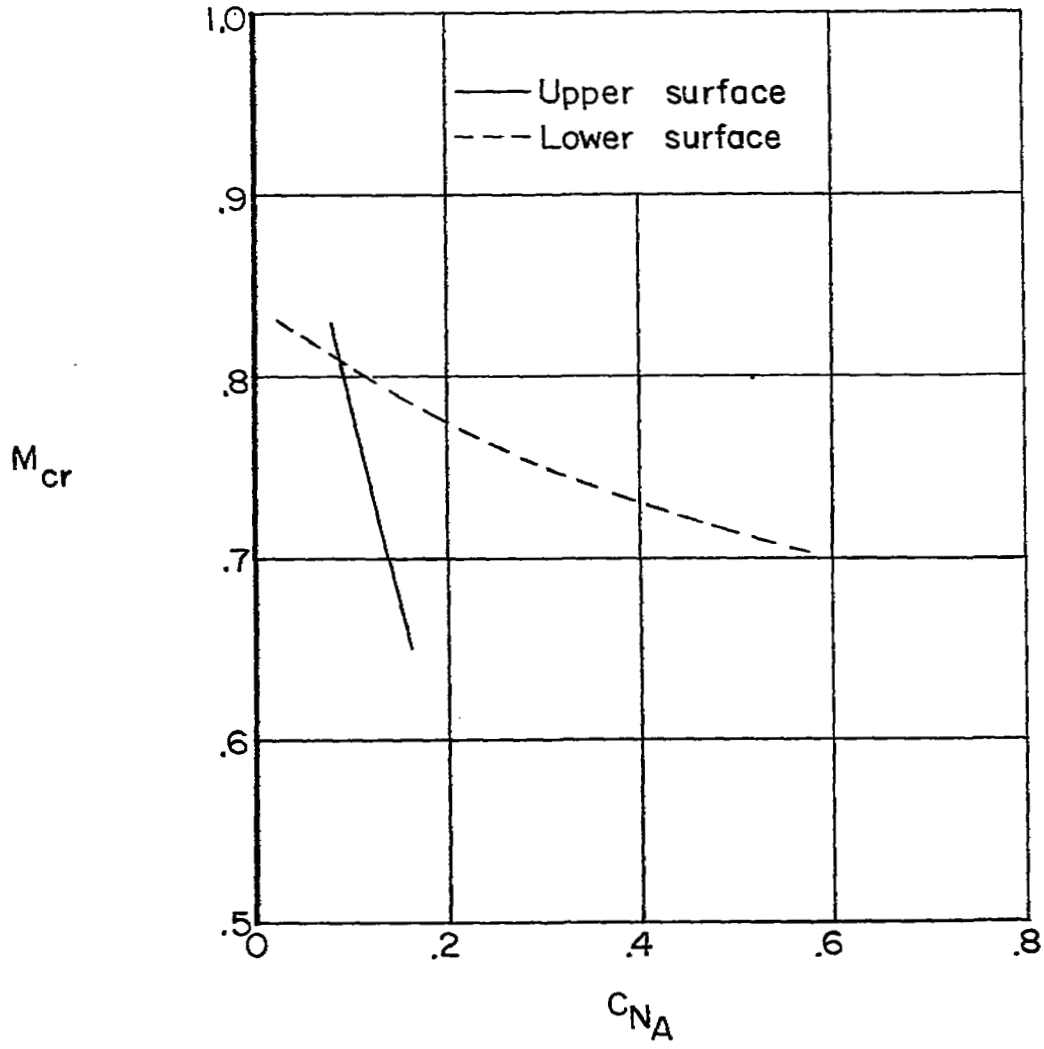

Figure 15.- Variation of critical Mach number with airplane normal-force coefficient.

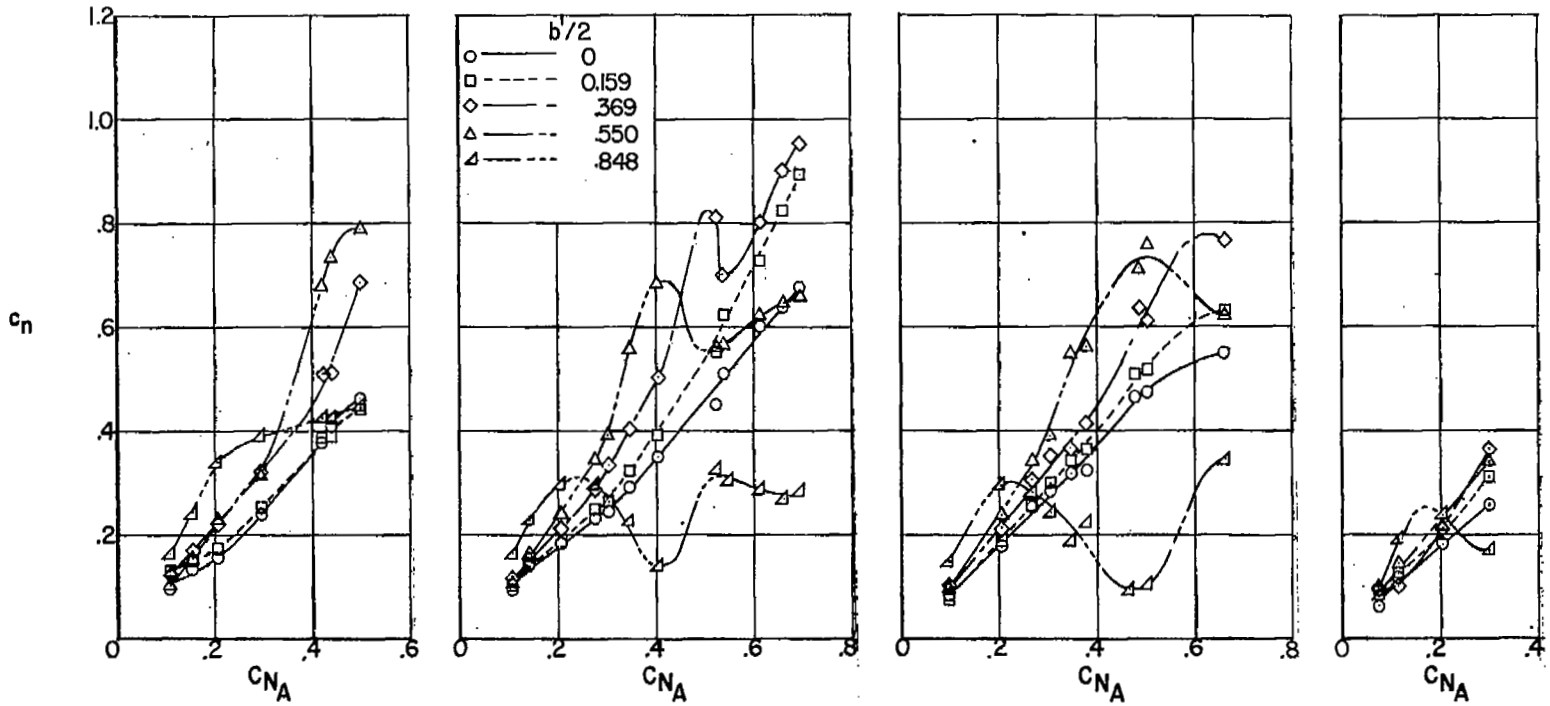

(a) Stall approach. (b) M ≈ 0.70. (c) M ≈ 0.88. (d) M ≈ 0.93.

Figure 16.- The variation of wing-section normal-force coefficient with airplane normal-force coefficient at representative Mach numbers.

[redacted]

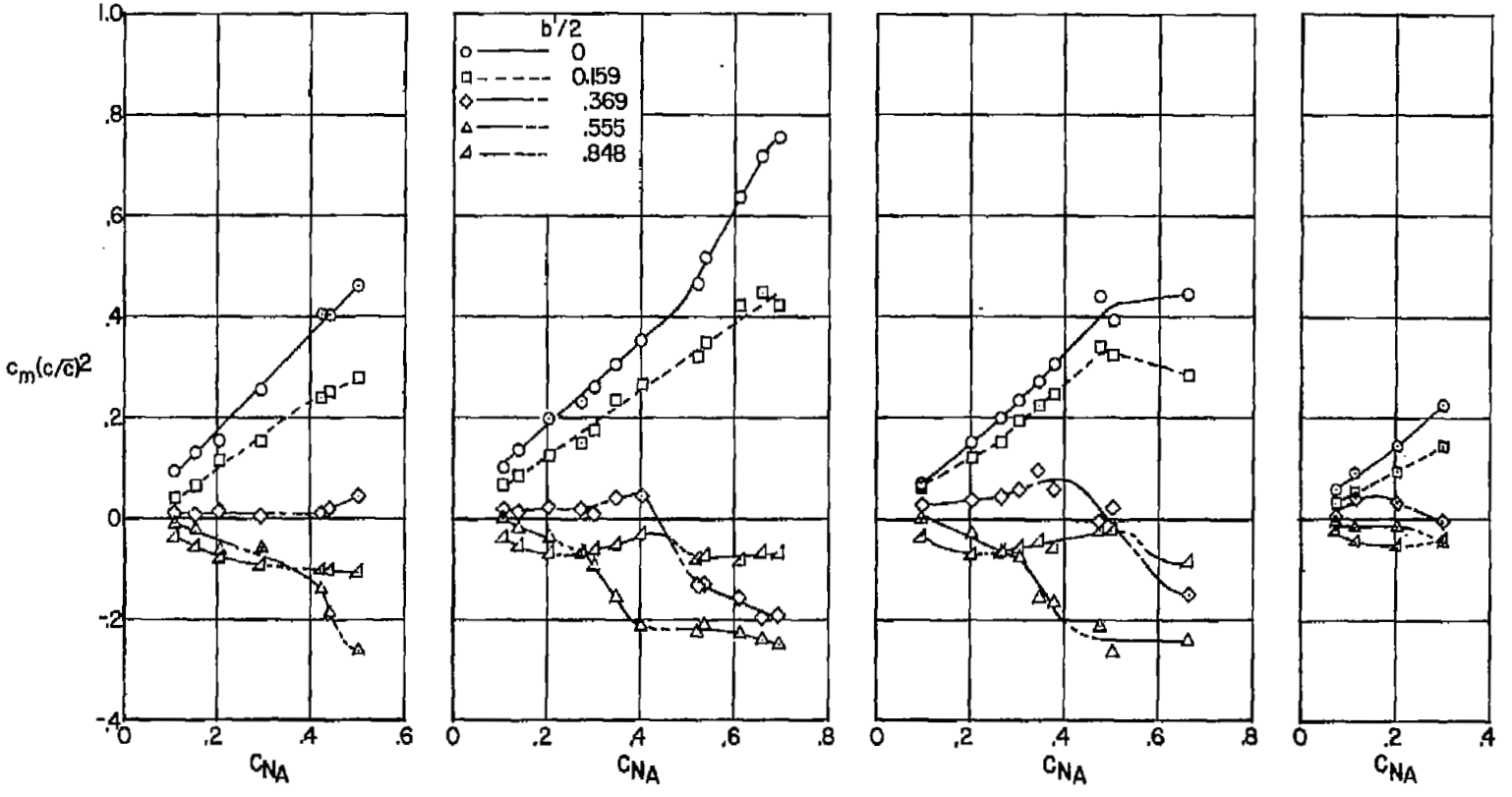

(a) Stall approach. (b) M ≈ 0.70. (c) M ≈ 0.88. (d) M ≈ 0.93.

Figure 17.- The variation of wing-section pitching-moment parameter with airplane normal-force coefficient at representative Mach numbers.

[redacted]

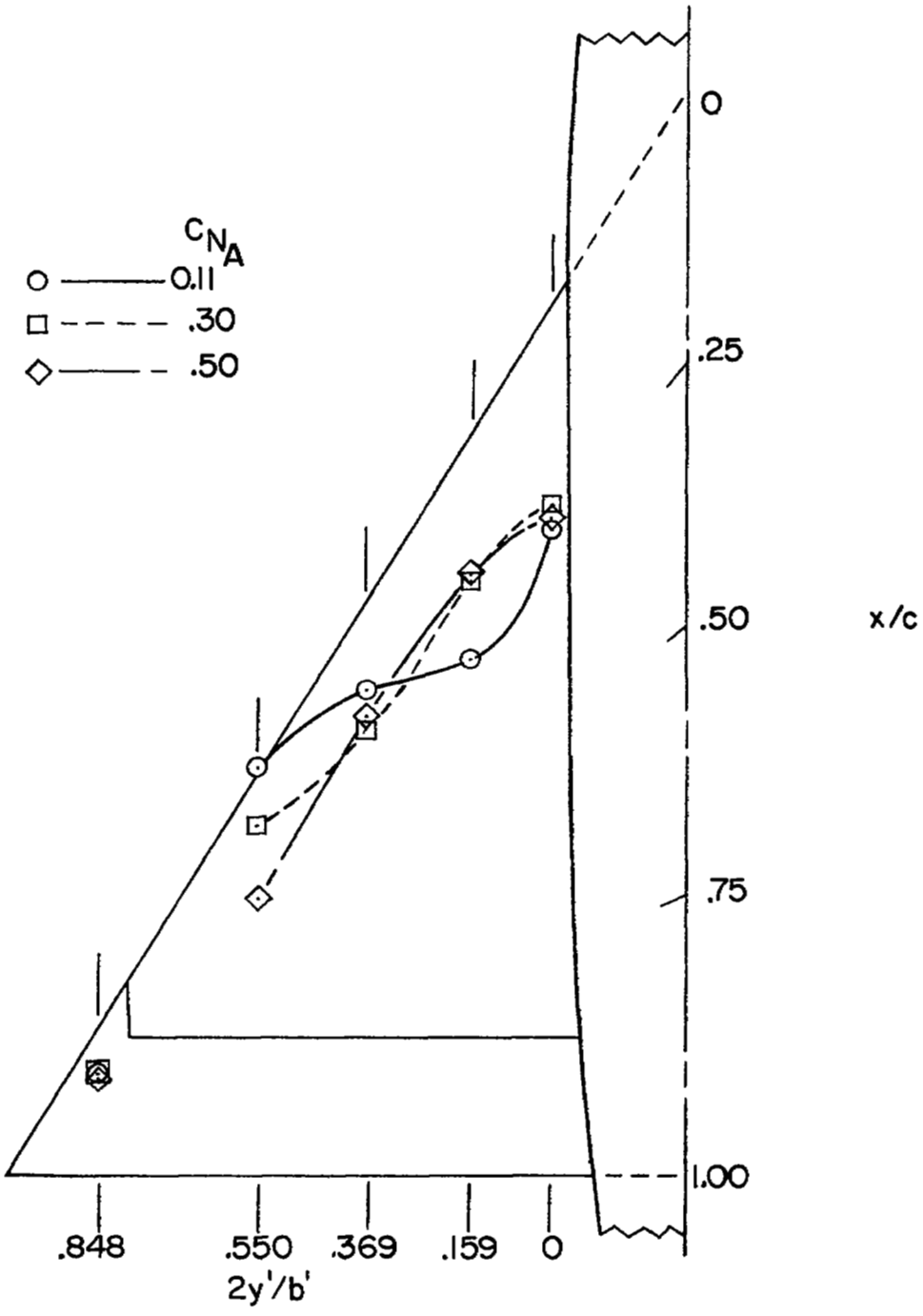

(a) Stall approach.

Figure 18.- The effect of airplane normal-force coefficient upon the wing-section center of pressure.

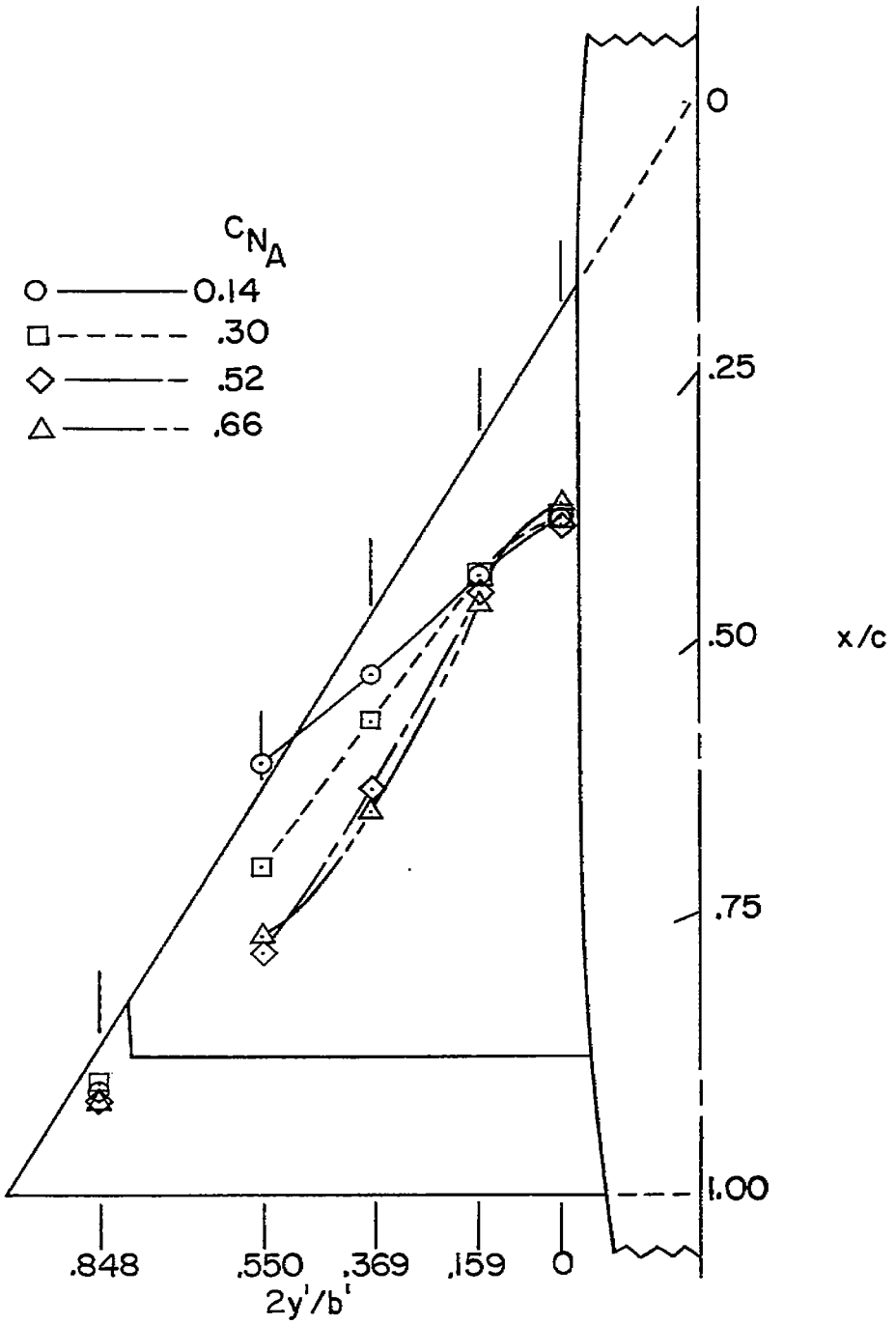

(b) M ≈ 0.70.

Figure 18.- Continued.

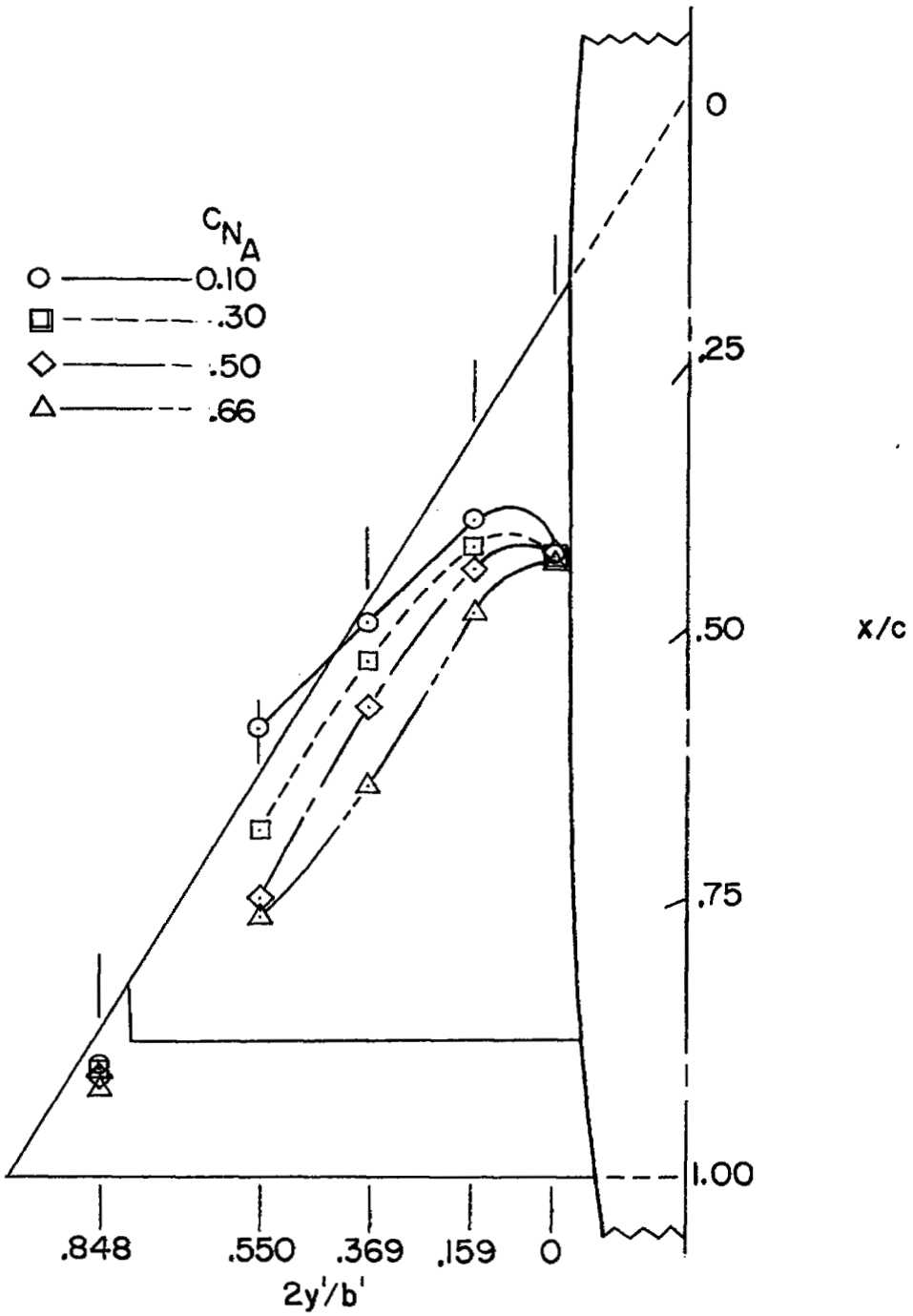

(c) M ≈ 0.88.

Figure 18.- Concluded.

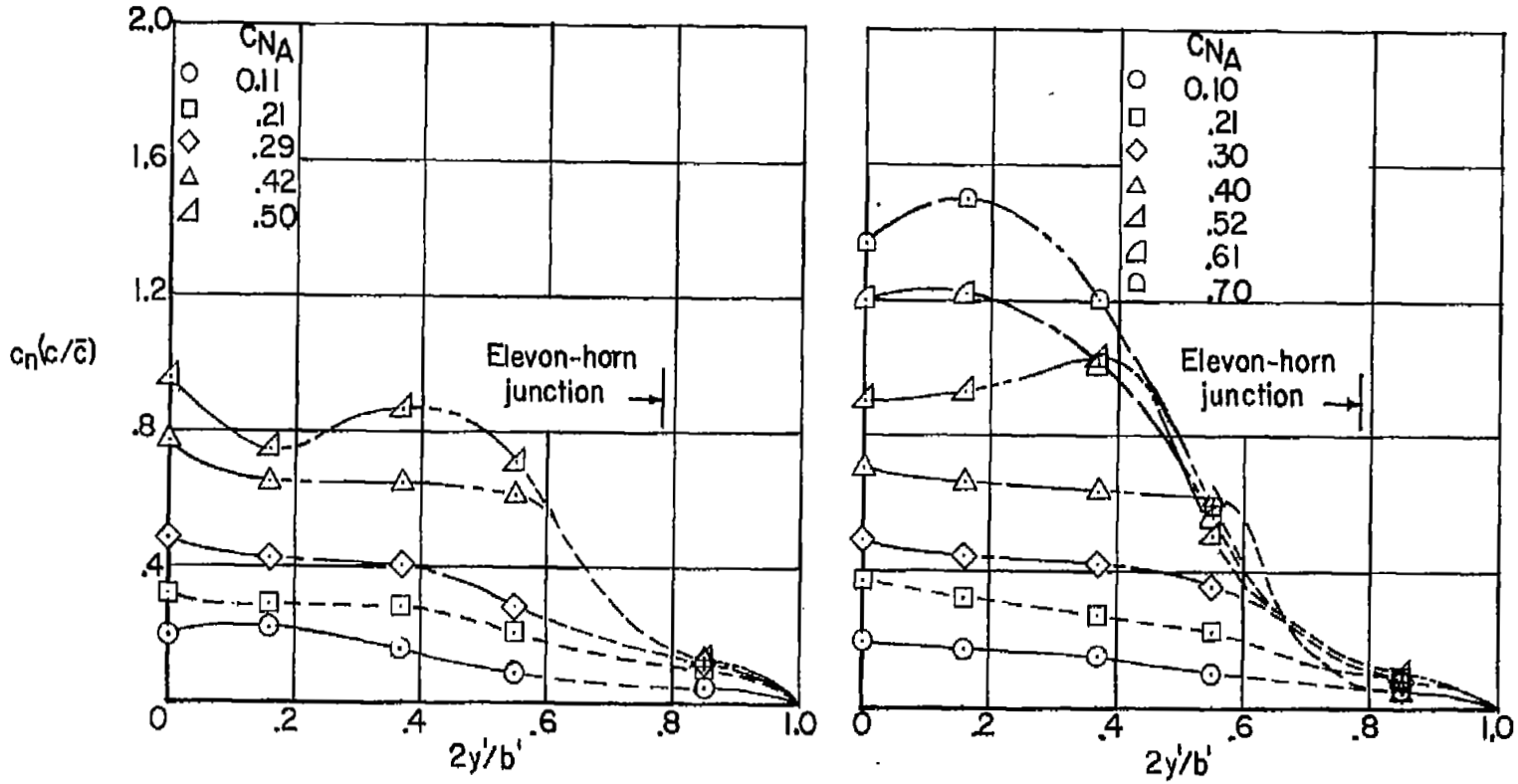

(a) Stall approach.

(b) $M \approx 0.70$.

Figure 19.- The effect of airplane normal-force coefficient upon the spanwise load distribution at representative Mach numbers.

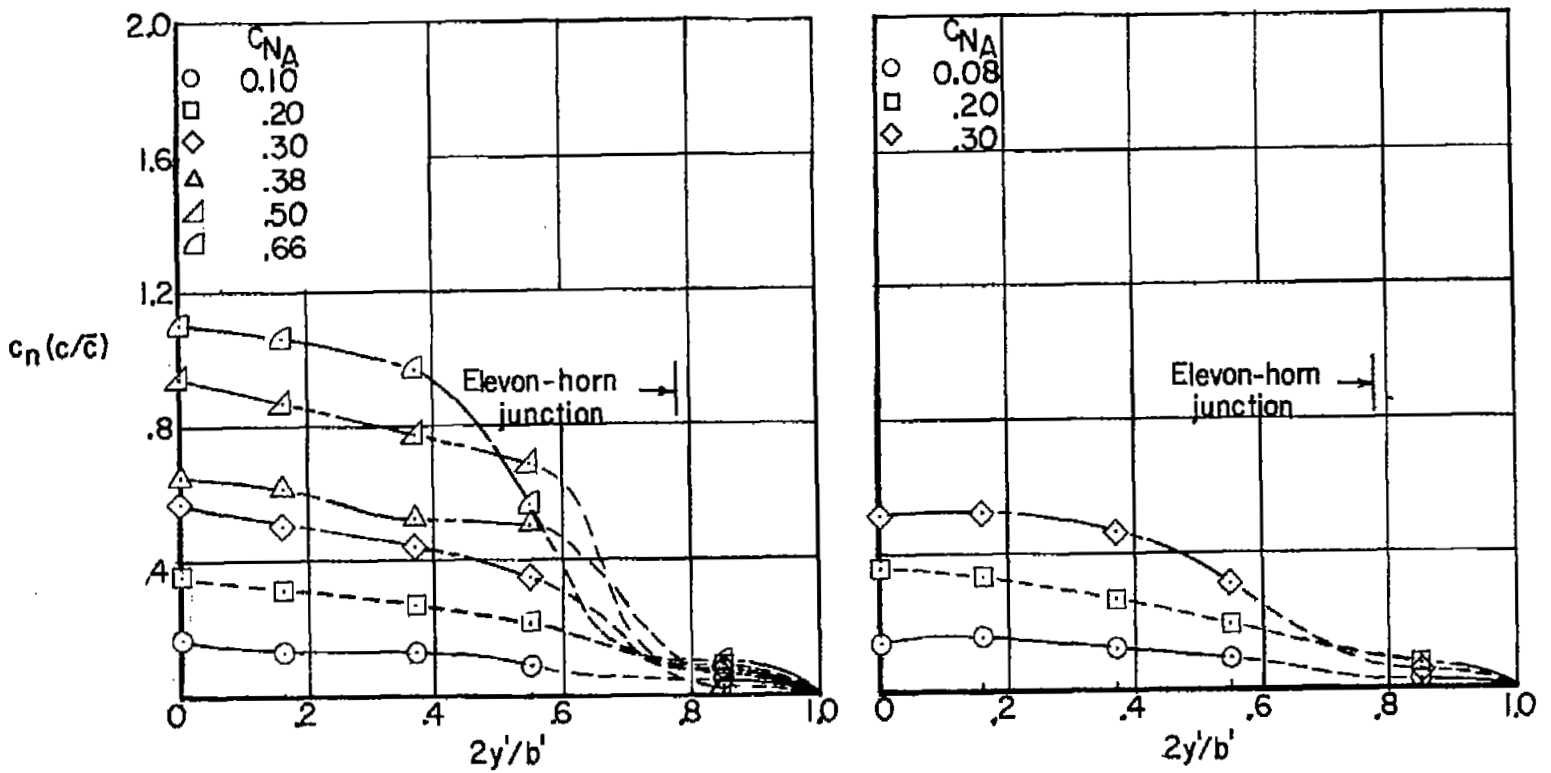

(c) M ≈ 0.88.

(d) M ≈ 0.93.

Figure 19.- Concluded.

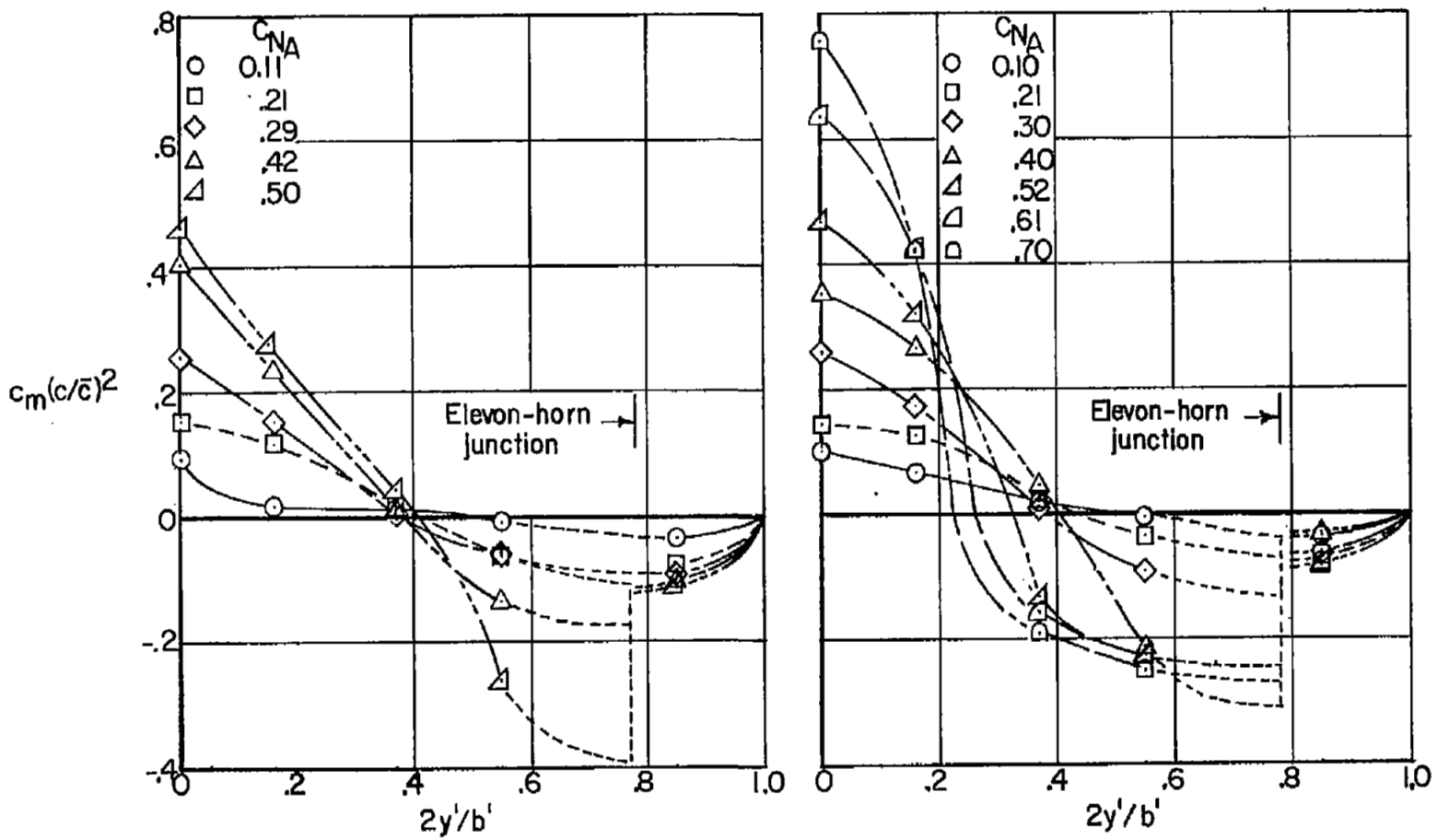

(a) Stall approach.

(b) M ≈ 0.70.

Figure 20.- Effect of airplane normal-force coefficient upon the spanwise pitching-moment distribution at representative Mach numbers.

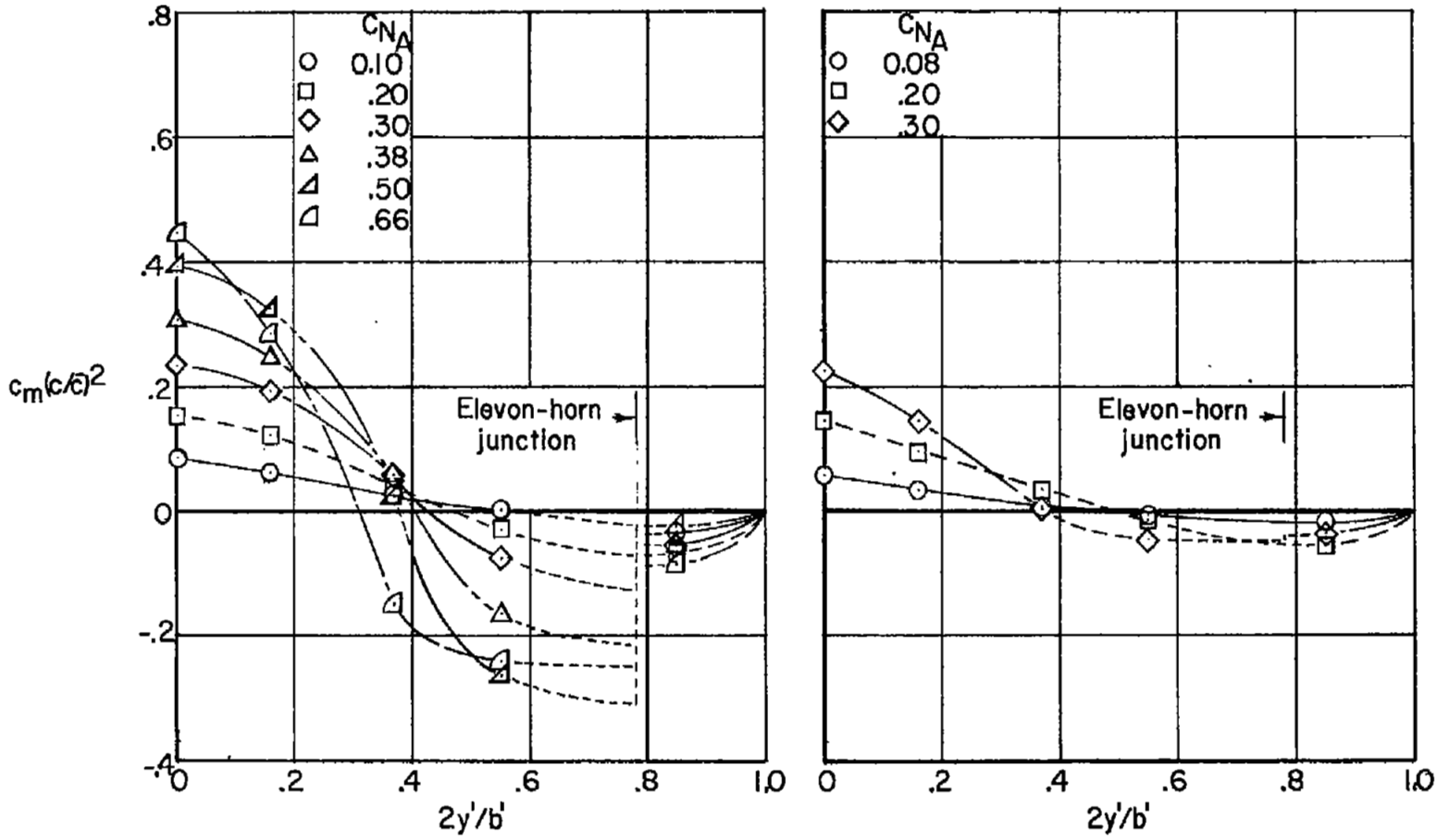

(c) M ≈ 0.88.

(d) M ≈ 0.93.

Figure 20.- Concluded.

[redacted]

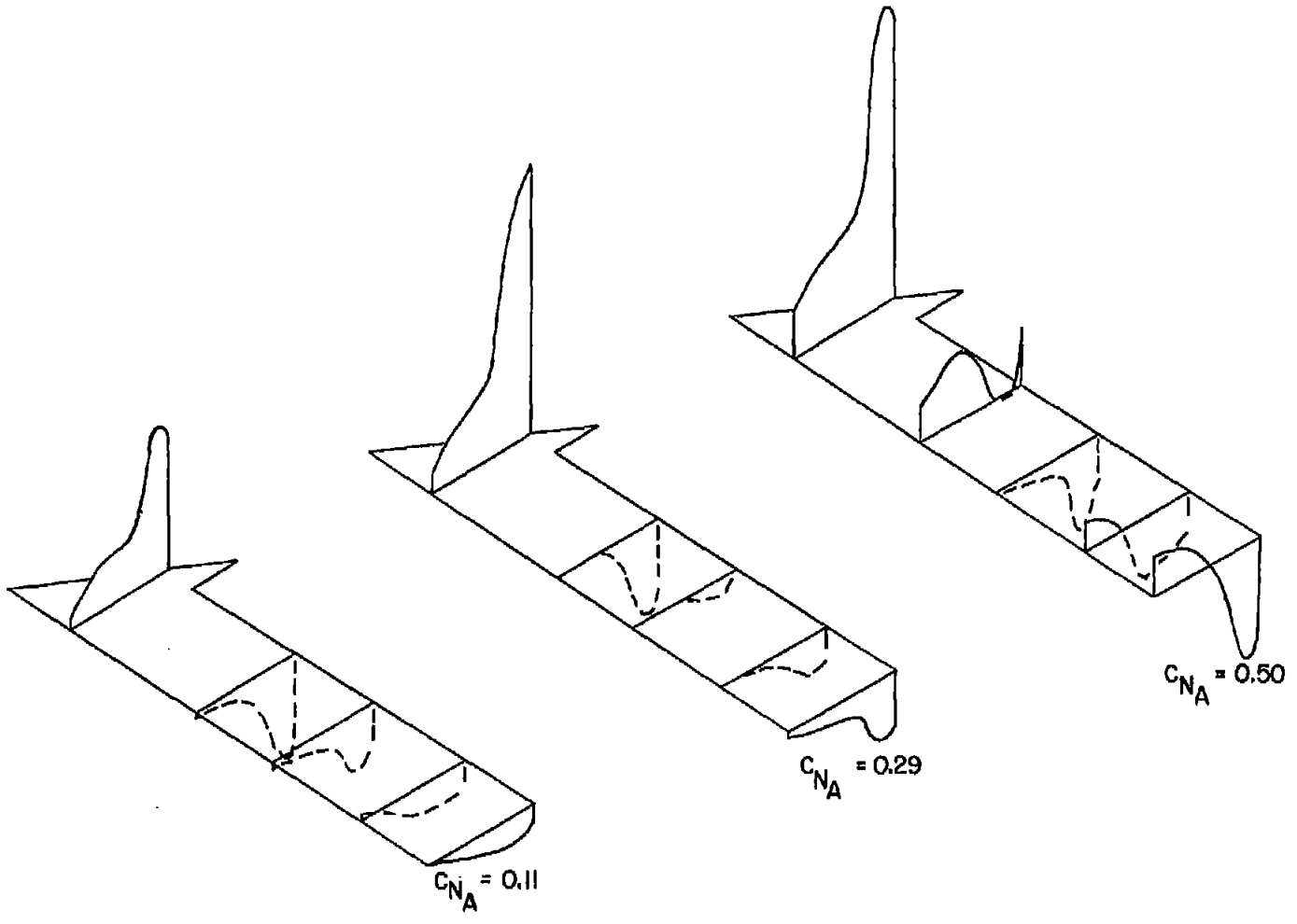

(a) Stall approach.

Figure 21.- Effect of airplane normal-force coefficient on the chordwise load distributions over the elevon.

[redacted]

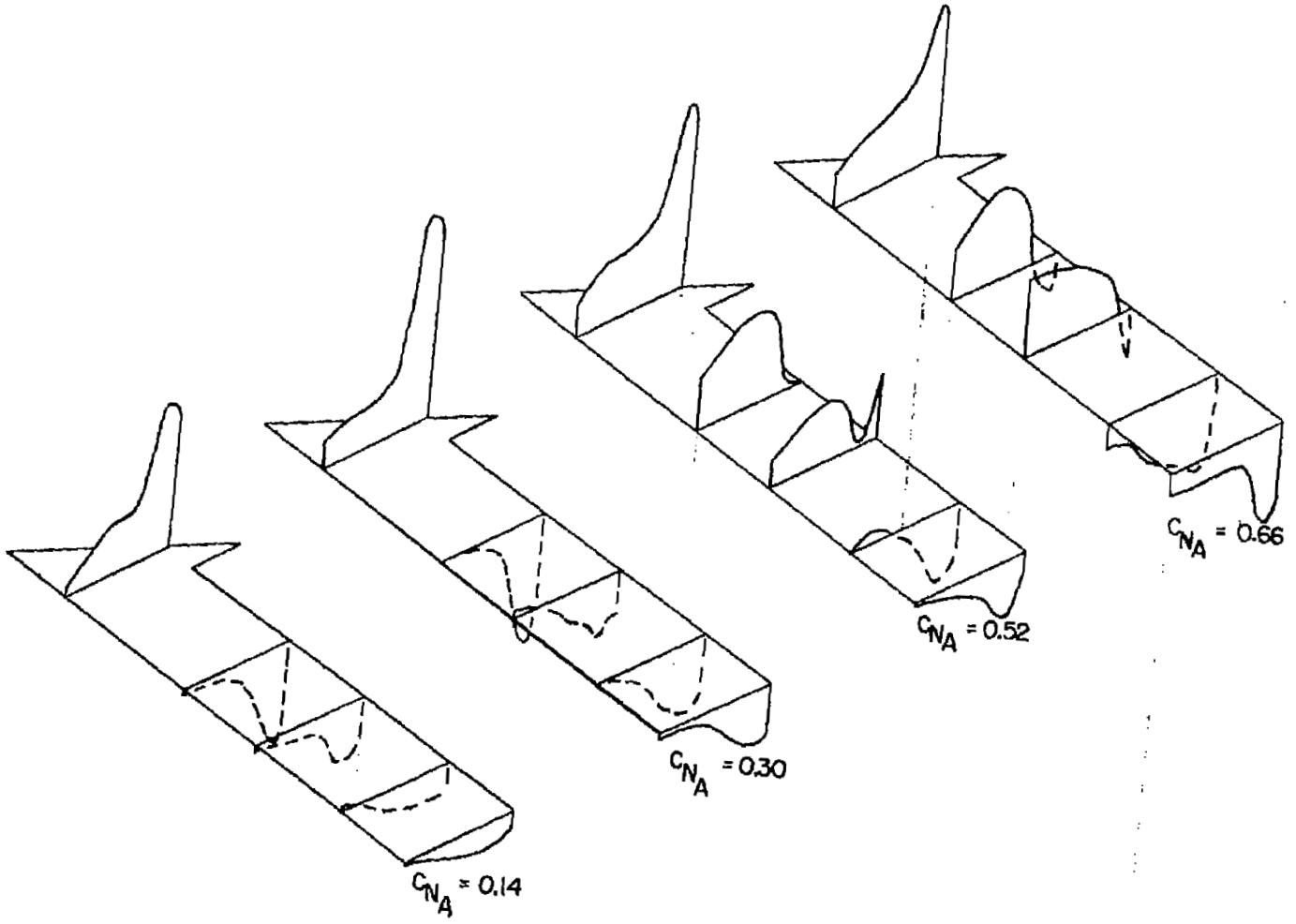

(b) $M \approx 0.70$.

Figure 21.- Continued.

[redacted]

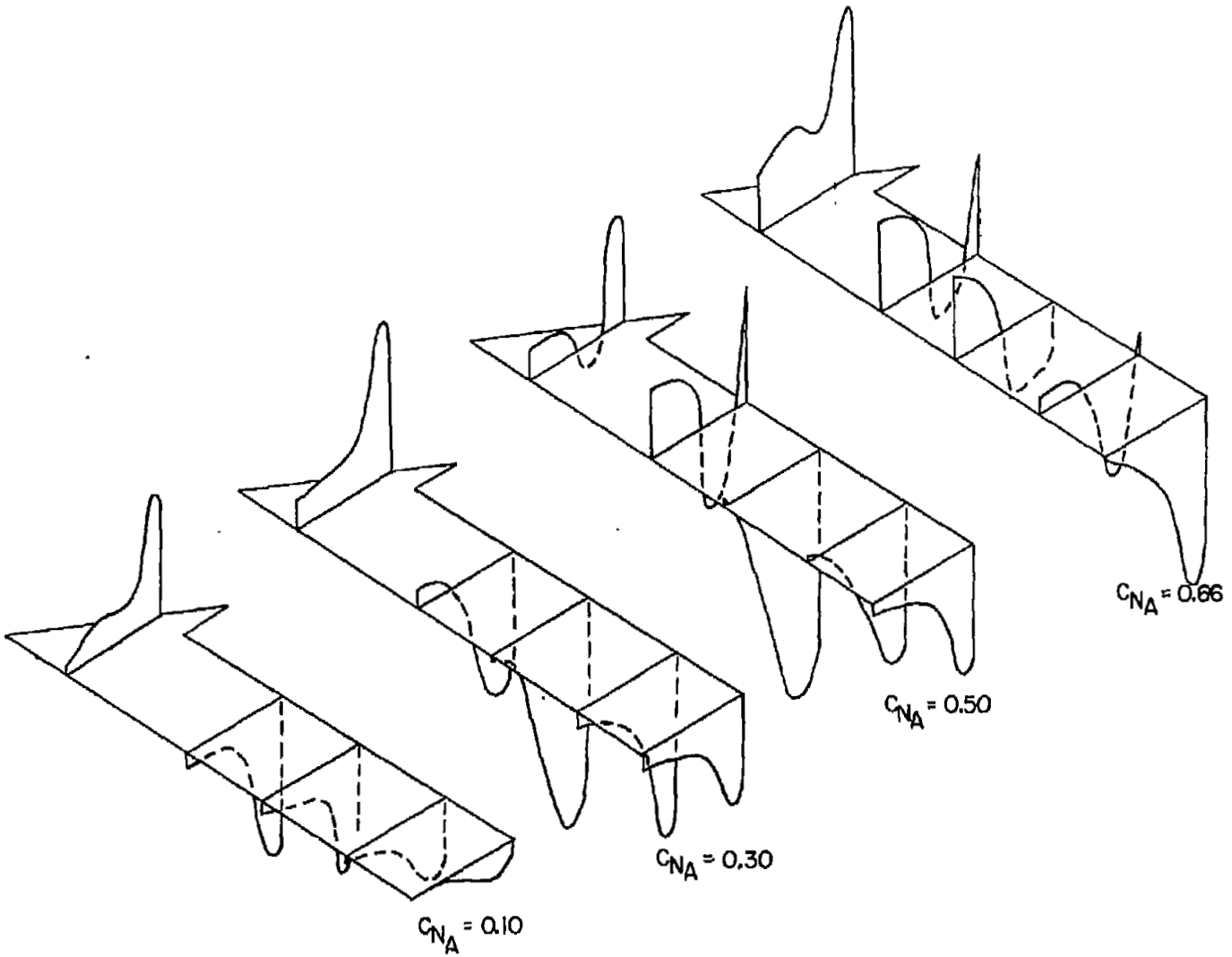

(c) M ≈ 0.88.

Figure 21.- Concluded.

[redacted]

NACA - Langley Field, Va.

NASA Technical Library
3 1176 01435 9906