RESEARCH MEMORANDUM

TESTS IN THE AMES 40- BY 80-FOOT WIND TUNNEL OF THE

AERODYNAMIC CHARACTERISTICS OF AIRPLANE

MODELS WITH PLAIN SPOILER AILERONS

By Ralph W. Franks

Ames Aeronautical Laboratory
Moffett Field, Calif.

CLASSIFICATION CANCELLED

Authority Naca Res. Abs. Date 8-16-56
RN-105
By NB 8-29-56 See

CLASSIFIED DOCUMENT

This material contains information affecting the National Defense of the United States within the meaning of the espionage laws, Title 18, U.S.C., Secs. 793 and 794, the transmission or revelation of which in any manner to an unauthorized person is prohibited by law.

NATIONAL ADVISORY COMMITTEE
FOR AERONAUTICS

WASHINGTON

December 6, 1954

NASA Technical Library
3 1176 01434 7737

NATIONAL ADVISORY COMMITTEE FOR AERONAUTICS

RESEARCH MEMORANDUM

TESTS IN THE AMES 40- BY 80-FOOT WIND TUNNEL OF THE AERODYNAMIC CHARACTERISTICS OF AIRPLANE MODELS WITH PLAIN SPOILER AILERONS

By Ralph W. Franks

SUMMARY

Four wings of different plan form equipped with plain spoiler ailerons have been tested at low speeds. Three of the models had wings of aspect ratio 3, the taper ratios and sweep of the quarter-chord lines being 0.40 and 16°; 0.40 and 41°; and 0 and 45°. The fourth model had a wing of aspect ratio 4.8 with a taper ratio of 0.51 and sweep of 35°. The spoilers were mounted normal to the wing upper surface along a constant-percent-chord line and were of constant-percent-chord height. Spoiler heights of 5-, 10-, and 15-percent chord, and spoiler lengths of 5- to 100-percent semispan were tested. The tests were conducted at Reynolds numbers from 7 to 13 million at a Mach number of 0.13. The data obtained are presented without discussion in the form of tabulated, six-component force and moment characteristics. In addition, some of the data are presented in graphic form.

INTRODUCTION

Retractable spoiler ailerons have been among the devices suggested to assist or replace flap-type ailerons as lateral controls on high-speed aircraft. Because of this interest, research work on spoilers has been carried out in wind-tunnel and flight tests. A bibliography of reports resulting from this research is given in reference 1.

It is the purpose of this report to present data showing the effect of plain spoiler ailerons on the characteristics of wing plan forms not previously tested with spoilers. Four wings of different plan form equipped with spoilers of various heights and spanwise extents were tested. The data presented in this report were obtained for use in developing and evaluating a method of predicting the rolling effectiveness of spoilers which is presented in reference 2. All of the data are

in tabulated form and, in addition, some data showing significant trends are also presented in graphic form.

NOTATION

The coefficients and symbols used in this report are defined as follows:

b wing span, measured perpendicular to plane of symmetry, ft

C_D drag coefficient, $\frac{\text{drag}}{qS}$

C_l rolling-moment coefficient, $\frac{\text{rolling moment}}{qSb}$

C_L lift coefficient, $\frac{\text{lift}}{qS}$

C_m pitching-moment coefficient, $\frac{\text{pitching moment}}{qS\bar{c}}$

C_n yawing-moment coefficient, $\frac{\text{yawing moment}}{qSb}$

C_Y side-force coefficient, $\frac{\text{side force}}{qS}$

c wing chord, measured parallel to plane of symmetry, ft

$\bar{c}$ mean aerodynamic chord of wing, measured parallel to plane of symmetry, $\frac{\int_0^{b/2} c^2 dy}{\int_0^{b/2} c\, dy}$, ft

h height of spoiler above wing surface, measured normal to wing surface, ft

q free-stream dynamic pressure, lb/sq ft

S wing area, sq ft

x_s distance from wing leading edge to spoiler, measured parallel to plane of symmetry, ft

y lateral coordinate perpendicular to plane of symmetry, ft

y_s distance from model center line to edge of spoiler, measured perpendicular to plane of symmetry, ft

α angle of attack of the wing-chord plane with reference to free stream, deg

η_i spanwise location of inboard end of spoiler, $\frac{y_{s_{inboard}}}{b/2}$

η_o spanwise location of outboard end of spoiler, $\frac{y_{s_{outboard}}}{b/2}$

DESCRIPTION OF MODELS TESTED

The geometric characteristics of the models tested are shown in figures 1 to 4. These figures and table I identify each of the four models by a number which will henceforth be used when referring to that model.

Tables II through V give the airfoil section ordinates for the models. It should be noted that model 2 was tested with each of two airfoil sections, one section being a modification of the basic NACA 64A006 airfoil section. The modification was made in connection with another investigation.

The spoilers used were fabricated of 3/8-inch plywood, and were installed perpendicular to the wing upper surface along the 70-percent-chord line. In addition, for model 2, spoilers were also placed along either the 60- or the 80-percent-chord lines. All of the spoilers were of constant-percent-chord height and were unperforated. Heights of 5-, 10-, and 15-percent chord were tested. A photograph of a typical installation is shown in figure 5. Spoilers were tested on the upper surface of the right wing panel of each model and varied in length from 5- to 100-percent semispan.

TESTS AND RESULTS

The tests made on the various models and configurations are listed in table VI. Included are tests made with the vertical tail removed from model 2, and tests made with the horizontal tail removed from model 4. These surfaces were removed in order to determine the effect of their presence on the rolling moment. It should be noted that model 2 complete with vertical tail was tested only with the modified leading edge. All of the tests were made at a dynamic pressure of 25 pounds per square foot and at a Mach number of 0.13. The Reynolds number of the various tests is given in table VI. All of the tests were made at zero sideslip with the range of angles of attack for the different models as follows:

Model 1	α, -2° to 18°
Model 2	α, -2° to 20°
Model 3	α, -2° to 20°
Model 4	α, -2° to 16°

The data have been reduced to NACA coefficient form with the moment center taken at 25 percent of the mean aerodynamic chord. The angle of attack, drag, and pitching moment (for the model with a horizontal tail) have been corrected for wind-tunnel-wall effects. The drag and pitching moment have been corrected for support-strut interference. The angle of attack and drag have also been corrected for air-stream inclination. Corrections due to asymmetrical wing loading were considered negligible. None of the data have been corrected for tare loads due to basic model asymmetry, but the incremental change in any characteristic due to spoiler deflection can be obtained by referring to the data tabulated for the model without spoilers.

The data indexed in table VI are tabulated in tables VII to XIII. Six-component force and moment data are presented for all models. In addition to the tabulated data, figures 6 to 9 present plots of the data obtained on the four models both without spoilers and with full-semispan spoilers deflected. These curves are considered typical of the data tabulated since, in general, the aerodynamic characteristics of the partial-semispan spoilers have the same trends as the curves presented.

Ames Aeronautical Laboratory
National Advisory Committee for Aeronautics
Moffett Field, Calif., Aug. 26, 1954

REFERENCES

1. Lowry, John G.: Data on Spoiler-Type Ailerons. NACA RM L53I24a, 1953.

2. Franks, Ralph W.: The Application of a Simplified Lifting-Surface Theory to the Prediction of the Rolling Effectiveness of Plain Spoiler Ailerons at Subsonic Speeds. NACA RM A54H26a, 1954.

TABLE I.- DIMENSIONAL DATA OF MODELS 1, 2, 3, AND 4

	Model			
	1	2	3	4
Wing				
Area, sq ft.	312.5	312.5	313.76	287.58
Span, ft	30.62	30.62	30.64	37.12
Mean aerodynamic chord, ft .	10.83	10.83	13.65	8.09
Aspect ratio	3.00	3.00	2.99	4.78
Sweep, quarter-chord line, deg.	15.94	40.6	45.0	35.0
Taper ratio.	0.40	0.40	0	0.51
Twist, deg	0	0	0	2
Dihedral, deg.	0	0	0	3
Fuselage				
Length, ft	---	56.16	56.16	46.00
Maximum diameter, ft	---	4.49	4.49	3.68
Fineness ratio	---	12.50	12.50	11.55
Vertical tail				
Exposed area, sq ft.	---	52.53	52.53	15.5
Aspect ratio of plan form extended to model center line	---	1.00	1.00	0.93
Taper ratio.	---	0	0	0.60
Airfoil section thickness, percent chord.	---	5	5	16
Horizontal tail				
Area, sq ft.	---	---	---	34.74
Aspect ratio	---	---	---	4.68
Taper ratio.	---	---	---	0.45
Sweep, quarter chord, deg. .	---	---	---	35.00
Dihedral angle, deg.	---	---	---	10.00

TABLE II.- COORDINATES OF THE AIRFOIL SECTION USED FOR MODEL 1 (MODIFIED DIAMOND)

[All coordinates are in percent chord and are taken parallel to the model center line.]

Station	Ordinate
0	[a]0
43.34	[a]1.950
45.00	2.015
47.50	2.079
50.00	2.100
52.50	2.079
55.00	2.015
56.66	[b]1.950
100.00	[b]0

[a]Airfoil has straight line between these points.

[b]Airfoil has straight line between these points.

TABLE III.- COORDINATES OF THE AIRFOIL SECTIONS USED FOR MODEL 2

[All coordinates are referred to the chord of the NACA 64A006 section and are in terms of percent of that chord. The sections are taken normal to the streamwise 0.31-chord line.]

Station	Ordinates of original sections (NACA 64A006)	Ordinates of modified sections	
		Upper surface	Lower surface
-1.50		-1.380	-1.380
-1.25		-.600	-2.065
-1.00		-.340	-2.315
-.75		-.145	-2.490
-.25		.160	-2.750
.00		.290	-2.855
.25	0	.395	-2.955
.50	.485	.490	-3.040
.75	.585	(1)	-3.100
1.25	.739	↓	-3.220
2.5	1.016	↓	-3.405
5.0	1.399	↓	-3.600
7.5	1.684	↓	-3.670
10	1.919	↓	-3.680
15	2.283	↓	-3.610
20	2.557	↓	-3.450
25	2.757	↓	-3.235
30	2.896	↓	-3.095
35	2.977	↓	-3.020
40	2.999	↓	-3.000
45	2.945	↓	(1)
50	2.825	↓	↓
55	2.653	↓	↓
60	2.438	↓	↓
65	2.188	↓	↓
70	1.907	↓	↓
75	1.602	↓	↓
80	1.285	↓	↓
85	.967	↓	↓
90	.649	↓	↓
95	.331	↓	↓
100	.013	↓	↓
L. E. radius:	0.246	1.19	
		Center of L.E. circle:	sta -0.31 ord -1.33

[1]Ordinates identical to those of the NACA 64A006 section.

TABLE IV.- COORDINATES OF THE AIRFOIL SECTION USED FOR MODEL 3 (NACA 0005-MODIFIED)

[All coordinates are in percent chord and are taken parallel to the model center line.]

Station	Ordinate
0	0
1.25	.789
2.50	1.089
5.00	1.481
7.50	1.750
10.00	1.951
15.00	2.228
20.00	2.391
25.00	2.476
30.00	2.501
40.00	2.419
50.00	2.206
60.00	1.902
67.00	1.650
70.00	1.500
80.00	1.000
90.00	0.500
100.00	0
L. E. radius:	0.275

TABLE V.- COORDINATES OF THE AIRFOIL SECTIONS USED FOR MODEL 4
(NACA 0012-64 MODIFIED AT ROOT; NACA 0011-64 MODIFIED AT TIP)

[All coordinates are in percent chord and are taken normal to the 0.25 chord stations.]

Station	Root station (2y/b = 0) ordinates		Tip station (2y/b = 0.990) ordinates	
	Upper	Lower	Upper	Lower
0	0.573	0.573	-0.378	-0.378
.5	1.659	-.601	.661	-.134
.75	1.900	-.846	.875	-1.559
1.25	2.250	-1.224	1.196	-1.880
2.5	2.855	-1.867	1.768	-2.405
5.0	3.588	-2.706	2.491	-3.062
7.5	4.062	-3.294	3.000	-3.500
10.0	4.415	-3.756	3.396	-3.825
15.0	4.902	-4.466	3.989	-4.273
20.0	5.208	-4.984	4.441	-4.577
25.0	5.401	-5.417	4.780	-4.771
30.0	5.496	-5.732	5.041	-4.878
35.0	5.506	-5.971	5.221	-4.911
40.0	5.438	-6.129	5.339	-4.875
45.0	5.282	-6.198	5.371	-4.766
50.0	5.046	-6.185	5.337	-4.589
55.0	4.719	-6.092	5.223	-4.336
60.0	4.326	-5.919	5.043	-4.003
65.0	3.850	-5.665	4.796	-3.607
70.0	3.293	-5.335	4.478	-3.145
75.0	2.660	-4.933	4.100	-2.614
[a]80.0	1.952	-4.456	3.654	-2.011
[a]100.0	-1.719	-1.719	1.125	1.125
L. E. radius:	1.527		1.236	

[a]Airfoil has straight lines between these points.

TABLE VI.- SUMMARY OF CONFIGURATIONS TESTED

Model	Configuration (1)	x_s/c	h/c	η_i	η_o	Reynolds number	Figure	Table
1	W	---	0	---	---	9.7×10^6	6	VII
		0.70	.05	0	0.2		---	
				0	.4		---	
				0	.6		---	
				0	.8		---	
				0	1.0		6	
				.4	1.0		---	
				.6	1.0		---	
			.10	0	.2		---	
				0	.4		---	
				0	.6		---	
				0	.8		---	
				0	1.0		6	
				.2	1.0		---	
				.4	1.0		---	
				.6	1.0		---	
				.8	1.0		---	
				.4	.8		---	
			.15	0	1.0		6	
2	W+F	---	0	---	---	9.7×10^6	7	VIII
		.70	.05	.15	.2		---	
				.15	.4		---	
				.15	.6		---	
				.15	.8		---	
				.15	1.0		7	
				.20	1.0		---	
				.4	1.0		---	
				.6	1.0		---	
				.8	1.0		---	
				.2	.6		---	
			.10	.15	.2		---	
				.15	.4		---	
				.15	.6		---	
				.15	.8		---	
				.15	1.0		7	
				.2	1.0		---	
				.4	1.0		---	
				.6	1.0		---	
				.8	1.0		---	
				.2	.6		---	
				.4	.6		---	

[1]Configuration designations: W, wing; F, fuselage; V, vertical tail; H, horizontal tail; W_{mod}, modified wing.

TABLE VI.- SUMMARY OF CONFIGURATIONS TESTED - Continued

Model	Configuration (2)	x_s/c	h/c	η_i	η_o	Reynolds number	Figure	Table
2	W+F	0.70	0.15	0.15	0.2	9.7×10^6	---	VIII
				.15	.4		---	
				.15	.6		---	
				.15	.8		---	
				.15	1.0		7	
				.2	1.0		---	
				.4	1.0		---	
				.6	1.0		---	
				.8	1.0		---	
				.2	.6		---	
	W_{mod}+F+V	---	0	---	---		---	IX
		.70	.10	.15	1.0		---	IX
	W_{mod}+F	---	0	---	---		---	X(a)
		.70	.05	.15	.4		---	
				.15	1.0		---	
				.6	1.0		---	
			.10	.15	.4		---	
				.15	1.0		---	
				.6	1.0		---	
		.60		.15	.4		---	X(b)
				.15	.6		---	
				.15	.8		---	
				.15	1.0		---	
				.4	1.0		---	
				.6	1.0		---	
		.80		.15	.4		---	X(c)
				.15	.6		---	
				.15	1.0		---	
				.4	1.0		---	
				.6	1.0		---	
				.8	1.0		---	
3	W+F+V	---	0	---	---	12.8×10^6	8	XI
		.70	.05	.15	.2		---	
				.15	.4		---	
				.15	.6		---	
				.15	.8		---	
				.15	1.0		8	
				.2	1.0		---	
				.4	1.0		---	
				.6	1.0		---	
				.8	1.0		---	
				.2	.4		---	
				.4	.6		---	
				.4	.8		---	

[2]See footnote 1, p. 11.

TABLE VI.- SUMMARY OF CONFIGURATIONS TESTED - Concluded

Model	Configuration (s)	x_s/c	h/c	η_i	η_o	Reynolds number	Figure	Table
3	W+F+V	0.70	0.10	0.15	0.2	12.8×10^6	---	XI
				.15	.4		---	
				.15	.6		---	
				.15	.8		---	
				.15	1.0		8	
				.2	1.0		---	
				.4	1.0		---	
				.6	1.0		---	
				.8	1.0		---	
				.2	.4		---	
				.4	.6		---	
				.4	.8		---	
			.15	.15	.2		---	
				.15	.4		---	
				.15	.6		---	
				.15	.8		---	
				.15	1.0		8	
				.2	1.0		---	
				.4	1.0		---	
				.6	1.0		---	
				.8	1.0		---	
				.2	.4		---	
				.4	.6		---	
				.4	.8		---	
4	W+F+V+H	---	0	---	---	7.17×10^6	9	XII
		.70	.10	.1	.2		---	
				.1	.4		---	
				.1	.6		---	
				.1	.8		---	
				.1	1.0		---	
				.2	1.0		---	
				.4	1.0		---	
				.6	1.0		---	
				.8	1.0		---	
				.4	.8		---	
	W+F+V	---	0	---	---		9	XIII
		.70	.05	.1	.2		---	
				.1	.4		---	
				.1	.6		---	
				.1	.8		---	
				.1	1.0		9	
				.2	1.0		---	
				.4	1.0		---	
			.10	.1	.4		---	
				.1	1.0		9	
				.4	1.0		---	

[a]See footnote 1, p. 11.

TABLE VII.- AERODYNAMIC CHARACTERISTICS OF MODEL 1

(a) $x_s/c = 0.70$; $h/c = 0$ and 0.05

α	C_L	C_D	C_m	C_Y	C_l	C_n
$h/c = 0$						
-2.03	-0.106	0.0097	0.0073	-0.0001	0.0007	0.0003
.05	.008	.0075	.0082	0	.0006	.0001
2.13	.128	.0116	.0158	-.0004	.0012	.0003
4.21	.246	.0234	.0164	-.0001	.0012	.0003
6.30	.372	.0441	.0172	-.0003	.0005	.0002
8.40	.511	.0773	.0049	.0004	.0002	.0003
10.49	.643	.1205	-.0117	.0008	-.0004	.0002
12.56	.748	.1706	-.0430	.0019	-.0018	.0001
14.61	.819	.2186	-.0642	.0031	-.0001	-.0003
16.59	.786	.2501	-.0997	.0023	-.0020	-.0003
18.50	.655	.2366	-.0982	.0026	.0017	-.0016

α	C_L	C_D	C_m	C_Y	C_l	C_n
$h/c = 0.05$		$\eta_i = 0$			$\eta_o = 0.20$	
-2.03	-0.095	0.0163	-0.0060	0.0012	-0.0004	-0.0002
.05	.013	.0145	-.0038	.0010	.0002	-.0002
2.12	.119	.0184	-.0017	.0005	.0008	-.0002
4.21	.238	.0303	.0044	.0003	.0012	0
6.30	.366	.0510	.0035	-.0001	.0019	.0001
8.39	.502	.0835	-.0078	-.0004	.0011	.0001
10.47	.624	.1251	-.0247	.0004	.0015	-.0002
12.55	.735	.1750	-.0462	.0008	.0012	-.0003
14.59	.786	.2149	-.0716	.0009	.0038	-.0012
16.59	.788	.2514	-.0940	.0020	-.0008	-.0004
18.55	.738	.2669	-.1137	.0013	-.0010	.0001
$h/c = 0.05$		$\eta_i = 0$			$\eta_o = 0.60$	
-2.08	-0.168	0.0306	-0.0057	0.0012	0.0055	0.0022
0	-.061	.0263	.0025	.0012	.0058	.0019
2.07	.046	.0275	.0018	.0009	.0070	.0015
4.15	.157	.0359	.0051	.0010	.0078	.0010
6.25	.304	.0550	.0046	.0009	.0051	.0010
8.36	.459	.0867	-.0067	.0007	.0049	.0005
10.45	.582	.1238	-.0196	.0012	.0061	-.0003
12.53	.708	.1722	-.0476	.0001	.0060	-.0005
14.59	.783	.2111	-.0620	.0003	.0052	-.0009
16.59	.780	.2458	-.0945	.0006	.0019	-.0004
18.52	.685	.2460	-.1008	.0017	.0004	-.0014
$h/c = 0.05$		$\eta_i = 0$			$\eta_o = 1.0$	
-2.10	-0.202	0.0407	-0.0009	0.0025	0.0147	0.0052
-.02	-.087	.0348	.0057	.0017	.0144	.0048
2.05	.017	.0345	.0087	.0009	.0150	.0041
4.12	.119	.0413	.0123	.0005	.0175	.0034
6.23	.269	.0574	.0083	-.0001	.0142	.0023
8.35	.446	.0867	-.0063	.0006	.0063	.0010
10.45	.594	.1262	-.0208	.0004	.0063	-.0002
12.54	.725	.1741	-.0592	.0012	.0049	-.0017
14.59	.787	.2129	-.0660	.0013	.0034	-.0021
16.59	.793	.2448	-.0850	.0018	-.0013	-.0017
18.52	.695	.2480	-.1003	.0032	-.0016	-.0022

α	C_L	C_D	C_m	C_Y	C_l	C_n
$h/c = 0.05$		$\eta_i = 0$			$\eta_o = 0.40$	
-2.06	-0.140	0.0240	-0.0096	0.0014	0.0013	0.0005
.02	-.022	.0209	-.0042	.0013	.0016	.0005
2.10	.082	.0236	-.0035	.0014	.0029	.0003
4.18	.195	.0334	.0016	.0013	.0039	.0001
6.27	.331	.0536	.0031	.0010	.0026	.0002
8.36	.462	.0839	-.0075	.0009	.0030	0
10.46	.596	.1245	-.0174	.0016	.0031	0
12.53	.702	.1720	-.0470	.0010	.0040	-.0005
14.59	.789	.2188	-.0717	.0006	.0036	-.0004
16.60	.805	.2490	-.0846	.0014	-.0004	-.0005
18.52	.696	.2473	-.0980	.0023	.0004	-.0016
$h/c = 0.05$		$\eta_i = 0$			$\eta_o = 0.80$	
-2.10	-0.195	0.0362	-0.0043	0.0015	0.0102	0.0037
-.02	-.081	.0308	.0015	.0012	.0113	.0034
2.06	.023	.0312	.0037	.0008	.0019	.0028
4.13	.132	.0382	.0069	.0006	.0131	.0022
6.23	.276	.0552	.0067	.0005	.0098	.0016
8.35	.445	.0852	-.0057	.0004	.0062	.0009
10.44	.581	.1232	-.0198	.0004	.0060	-.0001
12.53	.702	.1711	-.0471	.0010	.0045	-.0011
14.59	.790	.2143	-.0649	.0006	.0045	-.0012
16.59	.793	.2442	-.0896	.0004	.0047	-.0010
18.53	.701	.2464	-.0933	.0008	.0013	-.0012
$h/c = 0.05$		$\eta_i = 0.40$			$\eta_o = 1.0$	
-2.07	-0.154	0.0258	0.0020	0.0009	0.0073	0.0046
.01	-.044	.0213	.0070	.0007	.0097	.0042
2.09	-.070	.0232	.0126	-.0003	.0109	.0038
4.17	.189	.0322	.0155	-.0005	.0111	.0030
6.28	.351	.0510	.0100	-.0004	.0059	.0021
8.40	.511	.0821	.0006	-.0007	.0005	.0016
10.48	.629	.1188	-.0123	.0009	.0008	.0002
12.55	.735	.1684	-.0452	.0013	.0007	.0009
14.61	.814	.2154	-.0678	.0016	-.0005	-.0011
16.60	.809	.2514	-.0909	.0017	-.0044	-.0006
18.49	.652	.2357	-.0974	.0010	-.0020	0

NACA

TABLE VII.- AERODYNAMIC CHARACTERISTICS OF MODEL 1 - Continued

(b) $x_s/c = 0.70$; $h/c = 0.05$ and 0.10

α	C_L	C_D	C_m	C_Y	C_l	C_n
$h/c = 0.05$			$\eta_i = 0.60$		$\eta_o = 1.00$	
-2.05	-0.135	0.0188	0.0043	0.0010	0.0046	0.0032
.03	-.012	.0159	.0089	.0008	.0046	.0029
2.11	.095	.0183	.0123	-.0003	.0071	.0026
4.19	.213	.0291	.0135	.0004	.0075	.0021
6.29	.366	.0486	.0117	-.0006	.0011	.0017
8.39	.502	.0796	.0028	-.0006	.0009	.0011
10.48	.633	.1205	-.0168	.0008	.0010	.0002
12.56	.742	.1667	-.0377	.0019	.0012	-.0010
14.60	.800	.2154	-.0716	.0012	.0048	-.0013
16.60	.800	.2487	-.0927	.0018	-.0001	-.0009
18.52	.688	.2503	-.1079	.0030	.0010	-.0016
$h/c = 0.10$			$\eta_i = 0$		$\eta_o = 0.40$	
-2.12	-0.205	0.0406	-0.0104	0.0017	0.0082	0.0018
-.04	-.097	.0349	-.0039	.0016	.0090	.0014
2.04	.030	.0363	.0032	.0010	.0090	.0015
4.11	.124	.0427	.0051	.0014	.0101	.0009
6.20	.247	.0591	.0059	.0005	.0085	.0009
8.30	.391	.0882	-.0033	.0012	.0081	.0005
10.39	.531	.1269	-.0118	.0006	.0066	.0007
12.48	.640	.1741	-.0390	.0031	.0086	.0008
14.56	.762	.2169	-.0701	.0038	.0060	-.0016
16.56	.753	.2434	-.0946	.0039	.0049	-.0024
18.56	.730	.2586	-.1093	.0036	.0040	-.0034
$h/c = 0.10$			$\eta_i = 0$		$\eta_o = 0.80$	
-2.17	-0.272	0.0661	0.0023	0.0015	0.0238	0.0081
-.10	-.184	.0570	.0045	.0019	.0235	.0068
1.97	-.065	.0553	.0129	.0008	.0266	.0063
4.04	.027	.0567	.0167	.0003	.0264	.0052
6.14	.162	.0684	.0135	.0003	.0242	.0039
8.27	.348	.0928	.0001	.0003	.0154	.0028
10.37	.499	.1270	-.0100	.0003	.0110	.0012
12.47	.633	.1747	-.0430	.0032	.0099	-.0009
14.54	.731	.2114	-.0698	.0058	.0101	-.0044
16.60	.799	.2495	-.0863	.0046	.0055	-.0041
18.55	.725	.2468	-.0935	.0049	.0002	-.0044
$h/c = 0.10$			$\eta_i = 0.20$		$\eta_o = 1.00$	
-2.14	-0.255	0.0598	0.0061	0.0012	0.0261	0.0120
-.06	-.147	.0515	.0162	.0006	.0281	.0109
2.01	-.044	.0490	.0180	0	.0283	.0095
4.08	.058	.0529	.0224	-.0010	.0311	.0082
6.18	.204	.0637	.0202	-.0005	.0286	.0058
8.33	.417	.0869	.0024	-.0009	.0164	.0033
10.46	.589	.1231	-.0145	.0003	.0102	.0010
12.54	.716	.1666	-.0357	-.0004	.0070	-.0011
14.59	.791	.2113	-.0649	.0010	-.0002	-.0018
16.61	.816	.2433	-.0831	.0039	-.0016	-.0036
18.52	.695	.2462	-.1041	.0008	-.0001	-.0029

α	C_L	C_D	C_m	C_Y	C_l	C_n
$h/c = 0.10$			$\eta_i = 0$		$\eta_o = 0.20$	
-2.08	-0.154	0.0269	-0.0069	0.0005	0.0035	0.0002
0	-.038	.0224	-.0028	.0010	.0038	-.0001
2.08	.091	.0248	.0061	.0005	.0032	.0003
4.15	.182	.0346	.0048	.0003	.0053	.0001
6.24	.304	.0529	.0044	.0008	.0029	-.0002
8.34	.448	.0839	-.0013	.0011	.0039	-.0004
10.42	.573	.1223	-.0116	.0028	.0039	-.0011
12.51	.691	.1739	-.0423	.0034	.0037	-.0010
14.56	.765	.2166	-.0714	.0033	.0115	-.0029
16.59	.790	.2534	-.0927	.0033	.0014	-.0008
18.55	.727	.2603	-.1068	.0023	.0040	-.0013
$h/c = 0.10$			$\eta_i = 0$		$\eta_o = 0.60$	
-2.15	-0.245	0.0545	-0.0022	0.0010	0.0154	0.0047
-.08	-.143	.0469	.0012	.0016	.0153	.0038
2.00	-.023	.0469	.0078	.0008	.0167	.0036
4.08	.072	.0500	.0127	.0013	.0174	.0027
6.15	.179	.0620	.0067	.0007	.0154	.0019
8.27	.359	.0921	-.0025	.0017	.0144	.0013
10.37	.502	.1289	-.0130	.0010	.0091	.0015
12.47	.634	.1753	-.0470	.0042	.0096	-.0011
14.55	.743	.2119	-.0646	.0045	.0142	-.0039
16.59	.789	.2456	-.0849	.0040	.0051	-.0027
18.54	.711	.2491	-.1051	.0040	.0019	-.0041
$h/c = 0.10$			$\eta_i = 0$		$\eta_o = 1.00$	
-2.18	-0.308	0.0755	0.0058	0.0024	0.0301	0.0117
-.09	-.192	.0664	.0023	.0021	.0306	.0107
1.97	-.096	.0627	.0169	.0016	.0311	.0092
4.04	.003	.0635	.0204	.0004	.0336	.0075
6.13	.130	.0721	.0229	.0004	.0312	.0055
8.27	.330	.0927	.0043	.0003	.0185	.0031
10.38	.486	.1283	-.0167	.0003	.0139	.0008
12.48	.630	.1709	-.0356	.0030	.0101	-.0013
14.55	.738	.2112	-.0606	.0035	.0080	-.0037
16.57	.766	.2371	-.0789	.0028	-.0001	-.0030
18.54	.721	.2533	-.0985	.0021	-.0002	-.0027
$h/c = 0.10$			$\eta_i = 0.40$		$\eta_o = 1.00$	
-2.10	-0.206	0.0434	0.0116	0.0006	0.0212	0.0101
-.03	-.102	.0371	.0163	.0006	.0225	.0090
2.04	.006	.0361	.0205	-.0006	.0232	.0079
4.12	.115	.0426	.0247	-.0012	.0262	.0067
6.24	.286	.0577	.0217	-.0013	.0208	.0046
8.36	.453	.0840	.0013	-.0008	.0109	.0032
10.47	.613	.1244	-.0173	.0003	.0053	.0019
12.55	.727	.1662	-.0349	.0008	-.0005	.0006
14.61	.824	.2130	-.0597	.0017	.0025	-.0028
16.59	.797	.2470	-.1004	.0018	-.0028	-.0023
18.48	.639	.2304	-.0985	.0003	.0013	-.0009

NACA

TABLE VII.- AERODYNAMIC CHARACTERISTICS OF MODEL 1 - Concluded

(c) $x_s/c = 0.70$; $h/c = 0.10$ and 0.15

α	C_L	C_D	C_m	C_Y	C_l	C_n	α	C_L	C_D	C_m	C_Y	C_l	C_n
$h/c = 0.10$			$\eta_i = 0.60$		$\eta_o = 1.00$		$h/c = 0.10$			$\eta_i = 0.80$		$\eta_o = 1.00$	
-2.08	-0.170	0.0301	0.0090	0.0013	0.0125	0.0069	-2.05	-0.132	0.0185	0.0093	0.0013	0.0048	0.0033
0	-.052	.0251	.0161	.0006	.0135	.0064	.03	-.016	.0154	.0108	.0008	.0058	.0031
2.08	.057	.0264	.0167	0	.0147	.0056	2.11	.096	.0183	.0147	.0003	.0064	.0029
4.16	.168	.0345	.0217	-.0004	.0171	.0047	4.19	.216	.0286	.0180	0	.0071	.0022
6.27	.324	.0522	.0181	-.0014	.0118	.0035	6.29	.352	.0484	.0154	-.0009	.0045	.0022
8.37	.472	.0830	.0030	-.0010	.0081	.0030	8.38	.487	.0813	.0050	-.0010	.0031	.0026
10.46	.605	.1237	-.0182	.0001	.0039	.0021	10.47	.617	.1223	-.0122	.0001	.0017	.0022
12.55	.734	.1704	-.0427	.0012	-.0011	.0010	12.55	.732	.1698	-.0373	.0012	.0007	.0008
14.60	.807	.2167	-.0692	.0035	-.0028	-.0014	14.59	.797	.2178	-.0704	.0022	-.0034	.0001
16.61	.818	.2535	-.0907	.0018	-.0035	-.0007	16.61	.813	.2524	-.0902	-.0003	-.0009	.0004
18.49	.645	.2319	-.0942	.0005	.0001	0	18.48	.627	.2300	-.0987	.0004	-.0006	.0002
$h/c = 0.10$			$\eta_i = 0.40$		$\eta_o = 0.80$		$h/c = 0.15$			$\eta_i = 0$		$\eta_o = 1.00$	
-2.09	-0.188	0.0340	0.0071	0.0004	0.0140	0.0063	-2.23	-0.393	0.1125	0.0134	0.0005	0.0407	0.0193
-.01	-.076	.0291	.0128	0	.0142	.0057	-.16	-.288	.1003	.0181	.0010	.0408	.0173
2.06	.030	.0298	.0127	-.0005	.0160	.0052	1.91	-.186	.0907	.0219	.0003	.0417	.0158
4.14	.147	.0370	.0181	-.0006	.0179	.0040	3.98	-.091	.0910	.0251	-.0012	.0438	.0138
6.25	.301	.0533	.0119	-.0009	.0124	.0032	6.06	.027	.0957	.0274	-.0009	.0446	.0111
8.38	.482	.0811	-.0007	-.0001	.0050	.0013	8.17	.187	.1044	.0252	-.0013	.0401	.0079
10.48	.628	.1201	-.0179	.0005	.0021	-.0003	10.32	.396	.1276	-.0021	.0005	.0265	.0026
12.58	.780	.1663	-.0411	.0012	.0015	-.0015	12.43	.554	.1676	-.0309	.0015	.0179	-.0002
14.61	.818	.2120	-.0598	.0021	.0005	-.0025	14.50	.666	.2166	-.0553	.0014	.0105	-.0007
16.59	.788	.2438	.0956	.0021	.0013	-.0027	16.57	.756	.2534	-.0729	.0018	.0017	-.0015
18.49	.646	.2324	-.0985	.0013	.0006	-.0016	18.58	.778	.2724	-.0908	.0038	.0014	-.0048

NACA

TABLE VIII.- AERODYNAMIC CHARACTERISTICS OF MODEL 2
WITH VERTICAL TAIL REMOVED
(a) $x_s/c = 0.70$; $h/c = 0$ and 0.05

α	C_L	C_D	C_m	C_Y	C_l	C_n
$h/c = 0$						
-2.04	-0.110	0.0129	0.0105	-0.0001	-0.0009	0.0003
.04	.005	.0111	.0104	-.0004	-.0004	-.0001
2.12	.113	.0133	.0098	-.0004	-.0003	-.0002
4.20	.226	.0181	.0061	-.0004	-.0006	-.0002
6.28	.346	.0267	.0029	-.0006	-.0005	-.0001
8.37	.468	.0443	-.0078	.0022	.0010	-.0027
10.46	.607	.0866	-.0150	.0026	-.0024	-.0004
12.54	.716	.1414	-.0049	.0030	-.0021	-.0004
14.60	.805	.1954	-.0094	.0018	-.0036	.0006
16.66	.887	.2534	-.0051	.0020	-.0027	-.0005
18.69	.930	.3103	-.0119	.0005	.0001	-.0014
20.71	.961	.3659	-.0371	-.0001	-.0026	.0006

α	C_L	C_D	C_m	C_Y	C_l	C_n
$h/c = 0.05$			$\eta_i = 0.15$		$\eta_o = 0.20$	
-2.02	-0.096	0.0148	0.0013	0.0016	-0.0017	-0.0005
.05	.011	.0132	.0031	.0010	-.0020	-.0004
2.13	.117	.0159	.0013	.0004	-.0009	-.0005
4.21	.233	.0208	-.0014	.0005	-.0007	-.0002
6.29	.349	.0301	-.0074	-.0004	-.0002	-.0002
8.37	.472	.0479	-.0180	.0027	.0004	-.0013
10.46	.596	.0889	-.0258	.0017	-.0024	-.0003
12.54	.712	.1419	-.0123	.0037	-.0028	-.0002
14.60	.808	.1986	-.0194	.0014	-.0025	-.0005
16.65	.896	.2580	-.0103	.0010	-.0054	.0008
18.69	.937	.3107	-.0056	.0010	-.0018	-.0006
20.70	.948	.3648	-.0431	-.0009	.0014	.0003
$h/c = 0.05$			$\eta_i = 0.15$		$\eta_o = 0.60$	
-2.04	-0.129	0.0266	-0.0006	-0.0017	0.0031	0.0020
.03	-.024	.0250	.0030	-.0035	.0046	.0020
2.10	.069	.0366	.0053	-.0049	.0073	.0018
4.17	.177	.0304	0	-.0059	.0089	.0020
6.25	.298	.0380	-.0012	-.0061	.0088	.0014
8.32	.407	.0529	-.0123	-.0031	.0126	-.0004
10.41	.540	.0860	-.0196	.0005	.0077	-.0013
12.52	.682	.1458	-.0153	-.0004	.0004	.0006
14.58	.789	.2019	-.0166	-.0014	.0019	-.0005
16.64	.871	.2543	-.0042	-.0008	.0010	-.0006
18.68	.918	.3080	.0011	-.0031	.0034	-.0015
20.69	.937	.3613	-.0345	-.0004	-.0014	-.0007
$h/c = 0.05$			$\eta_i = 0.15$		$\eta_o = 1.00$	
-2.06	-0.141	0.0339	0.0091	-0.0054	0.0107	0.0053
.01	-.045	.0320	.0085	-.0070	.0129	.0055
2.09	.065	.0326	.0120	-.0083	.0147	.0055
4.15	.165	.0357	.0121	-.0108	.0173	.0055
6.23	.273	.0420	.0111	-.0121	.0193	.0045
8.32	.396	.0556	.0042	-.0102	.0207	.0028
10.41	.536	.0899	-.0100	-.0031	.0155	-.0001
12.51	.682	.1447	-.0149	.0004	.0059	-.0005
14.58	.778	.1975	-.0123	-.0008	.0035	-.0004
16.64	.868	.2542	-.0088	-.0010	.0018	.0001
18.68	.926	.3104	-.0031	-.0013	.0015	-.0008
20.71	.958	.3651	-.0341	.0040	.0003	-.0028

α	C_L	C_D	C_m	C_Y	C_l	C_n
$h/c = 0.05$			$\eta_i = 0.15$		$\eta_o = 0.40$	
-2.03	-0.112	0.0208	-0.0040	-0.0004	0.0003	0.0005
.04	-.012	.0195	-.0037	-.0005	.0003	.0008
2.12	.102	.0219	-.0018	-.0014	.0012	.0006
4.19	.206	.0264	-.0041	-.0029	.0035	.0006
6.27	.322	.0349	-.0068	-.0015	.0027	.0004
8.35	.437	.0500	-.0162	.0009	.0068	-.0013
10.44	.573	.0885	-.0237	.0013	.0014	-.0016
12.52	.680	.1407	-.0180	.0051	-.0004	-.0015
14.59	.795	.2006	-.0237	.0023	-.0046	0
16.63	.870	.2541	-.0062	.0017	-.0012	-.0006
18.68	.915	.3100	-.0093	-.0017	.0008	-.0008
20.69	.929	.3607	-.0427	-.0008	.0030	-.0008
$h/c = 0.05$			$\eta_i = 0.15$		$\eta_o = 0.80$	
-2.05	-0.139	0.0307	0.0038	-0.0036	0.0079	0.0040
.02	-.035	.0289	.0038	-.0049	.0086	.0035
2.09	.065	.0302	.0093	-.0067	.0110	.0035
4.17	.175	.0337	.0065	-.0081	.0129	.0034
6.24	.278	.0405	.0053	-.0093	.0149	.0028
8.32	.398	.0549	-.0055	-.0056	.0184	.0005
10.41	.543	.0990	-.0136	-.0034	.0120	-.0002
12.51	.678	.1441	-.0146	-.0009	.0034	.0003
14.58	.781	.2018	-.0209	-.0008	.0028	-.0002
16.63	.861	.2522	-.0163	-.0005	.0009	-.0007
18.68	.919	.3104	-.0037	-.0018	.0032	-.0022
20.69	.923	.3566	-.0424	.0013	.0020	-.0017
$h/c = 0.05$			$\eta_i = 0.20$		$\eta_o = 1.00$	
-2.05	-0.133	0.0325	0.0082	-0.0073	0.0079	0.0057
.03	-.030	.0311	.0104	-.0097	.0105	.0058
2.10	.072	.0323	.0119	-.0110	.0123	.0056
4.17	.181	.0358	.0105	-.0137	.0150	.0055
6.24	.289	.0426	.0092	-.0138	.0159	.0048
8.33	.411	.0576	.0033	-.0138	.0211	.0027
10.42	.549	.0911	-.0097	-.0032	.0150	.0004
12.52	.678	.1466	-.0136	-.0034	.0046	.0009
14.59	.798	.2037	-.0193	-.0039	.0031	.0009
16.64	.872	.2573	-.0074	-.0005	.0006	.0003
18.67	.904	.3051	-.0053	-.0017	.0032	-.0021
20.70	.938	.3594	-.0448	.0017	.0003	-.0030

NACA

TABLE VIII.- AERODYNAMIC CHARACTERISTICS OF MODEL 2
WITH VERTICAL TAIL REMOVED - Continued
(b) $x_s/c = 0.70$; $h/c = 0.05$ and 0.10

α	C_L	C_D	C_m	C_Y	C_l	C_n
$h/c = 0.05$			$\eta_i = 0.40$		$\eta_o = 1.00$	
-2.04	-0.127	0.0264	0.0110	-0.0056	0.0032	0.0051
.05	-.021	.0246	.0123	-.0066	.0054	.0051
2.11	.082	.0261	.0121	-.0077	.0067	.0047
4.18	.195	.0299	.0111	-.0098	.0098	.0048
6.26	.307	.0379	.0066	-.0106	.0108	.0040
8.34	.425	.0529	.0022	-.0082	.0133	.0023
10.44	.583	.0915	-.0161	-.0025	.0051	.0018
12.53	.710	.1458	-.0061	-.0007	.0020	.0008
14.58	.790	.1944	-.0123	.0013	-.0001	-.0008
16.64	.876	.2509	-.0049	.0023	-.0011	-.0016
18.67	.913	.3032	-.0105	-.0002	.0011	-.0023
20.70	.941	.3609	-.0456	.0005	-.0069	.0003
$h/c = 0.05$			$\eta_i = 0.80$		$\eta_o = 1.00$	
-2.03	-0.106	0.0163	0.0066	-0.0015	-0.0018	0.0019
.05	.003	.0147	.0092	-.0018	-.0019	.0020
2.12	.108	.0167	.0070	-.0026	-.0008	.0018
4.20	.226	.0216	.0078	-.0036	.0007	.0022
6.28	.336	.0300	.0011	-.0036	.0010	.0016
8.36	.452	.0465	-.0104	-.0023	.0031	.0001
10.46	.606	.0863	-.0135	.0035	-.0020	.0006
12.53	.706	.1384	-.0058	.0028	-.0012	-.0009
14.59	.796	.1944	-.0147	.0023	-.0011	-.0007
16.64	.884	.2519	-.0050	.0033	-.0022	-.0008
18.68	.927	.3088	-.0107	-.0011	.0029	-.0018
20.70	.941	.3631	-.0459	-.0022	-.0018	.0010
$h/c = 0.10$			$\eta_i = 0.15$		$\eta_o = 0.20$	
-2.03	-0.095	0.0169	0.0014	0.0005	0.0003	-0.0004
.05	.016	.0156	.0003	0	-.0006	-.0005
2.12	.120	.0177	-.0006	-.0012	.0004	-.0002
4.20	.231	.0228	-.0011	-.0018	.0011	-.0001
6.28	.340	.0310	-.0062	-.0004	.0007	-.0005
8.36	.462	.0485	-.0146	.0025	.0017	-.0030
10.45	.592	.0885	-.0206	.0047	-.0011	-.0024
12.53	.707	.1424	-.0149	.0070	-.0018	-.0025
14.59	.794	.1947	-.0116	.0039	0	-.0027
16.66	.884	.2537	-.0100	.0030	-.0035	.0002
18.69	.928	.3093	-.0059	.0009	-.0033	-.0004
20.69	.938	.3632	-.0374	.0024	.0011	-.0007
$h/c = 0.10$			$\eta_i = 0.15$		$\eta_o = 0.60$	
-2.09	-0.193	0.0410	0.0096	-0.0061	0.0119	0.0044
-.02	-.089	.0389	.0078	-.0067	.0142	.0040
2.05	.018	.0385	.0102	-.0080	.0158	.0033
4.13	.123	.0421	.0078	-.0082	.0175	.0026
6.21	.242	.0480	.0056	-.0092	.0186	.0025
8.28	.351	.0595	.0014	-.0076	.0192	0
10.37	.473	.0875	-.0062	.0015	.0216	-.0043
12.48	.634	.1451	-.0080	.0018	.0107	-.0033
14.53	.711	.1935	-.0022	.0001	.0133	-.0040
16.60	.810	.2491	.0026	.0009	.0112	-.0056
18.66	.889	.3069	-.0026	-.0001	.0054	-.0038
20.70	.946	.3628	-.0232	.0013	.0001	-.0017

α	C_L	C_D	C_m	C_Y	C_l	C_n
$h/c = 0.05$			$\eta_i = 0.60$		$\eta_o = 1.00$	
-2.03	-0.117	0.0207	0.0068	-0.0031	0.0002	0.0039
.04	-.007	.0192	.0076	-.0042	.0017	.0037
2.12	.097	.0209	.0116	-.0050	.0028	.0032
4.20	.213	.0253	.0089	-.0061	.0044	.0035
6.27	.326	.0335	.0050	-.0074	.0062	.0029
8.35	.442	.0495	-.0052	-.0057	.0088	.0014
10.46	.603	.0901	-.0178	.0004	.0004	.0013
12.53	.706	.1392	-.0054	.0023	.0009	-.0015
14.59	.799	.1941	-.0150	.0022	-.0002	-.0014
16.64	.871	.2498	-.0070	.0037	-.0018	-.0012
18.68	.924	.3054	-.0051	-.0004	.0003	-.0013
20.70	.943	.3609	-.0421	.0019	-.0050	.0016
$h/c = 0.05$			$\eta_i = 0.20$		$\eta_o = 0.60$	
-2.04	-0.132	0.0254	0.0039	-0.0050	0.0023	0.0029
.03	-.023	.0240	.0018	-.0052	.0030	.0026
2.10	.076	.0260	.0039	-.0067	.0049	.0024
4.18	.189	.0301	.0017	-.0081	.0069	.0025
6.25	.300	.0379	-.0005	-.0086	.0087	.0022
8.33	.415	.0522	-.0088	-.0078	.0114	.0003
10.42	.558	.0877	-.0171	-.0001	.0069	-.0003
12.52	.693	.1463	-.0133	-.0028	.0019	.0015
14.58	.791	.2014	-.0179	-.0043	.0027	.0011
16.64	.879	.2578	-.0055	-.0016	.0008	.0005
18.68	.914	.3048	.0020	-.0039	.0053	.0027
20.70	.940	.3595	-.0379	-.0020	-.0029	.0006
$h/c = 0.10$			$\eta_i = 0.15$		$\eta_o = 0.40$	
-2.07	-0.154	0.0312	0.0038	-0.0029	0.0068	0.0015
0	-.051	.0293	.0032	-.0027	.0078	.0014
2.08	.055	.0308	.0023	-.0036	.0086	.0012
4.15	.161	.0342	.0011	-.0028	.0096	.0004
6.23	.272	.0418	-.0039	-.0028	.0100	-.0004
8.31	.386	.0553	-.0093	.0008	.0130	-.0040
10.40	.511	.0870	-.0154	.0059	.0121	-.0053
12.49	.642	.1415	-.0178	.0077	.0058	-.0050
14.57	.759	.1982	-.0172	.0047	-.0001	-.0032
16.62	.826	.2493	-.0044	.0044	.0056	-.0050
18.66	.892	.3069	.0033	-.0022	.0092	-.0048
20.70	.948	.3665	-.0289	-.0008	.0027	-.0024
$h/c = 0.10$			$\eta_i = 0.15$		$\eta_o = 0.80$	
-2.10	-0.207	0.0497	0.0174	-0.0087	0.0195	0.0077
-.04	-.112	.0473	.0173	-.0108	.0211	.0078
2.04	-.004	.0464	.0161	-.0126	.0241	.0071
4.11	.101	.0493	.0180	-.0150	.0258	.0068
6.18	.207	.0541	.0156	-.0157	.0271	.0058
8.26	.317	.0639	.0117	-.0139	.0309	.0024
10.34	.436	.0874	.0087	-.0031	.0326	-.0042
12.46	.605	.1428	-.0050	.0012	.0178	-.0037
14.63	.702	.1920	-.0032	0	.0152	-.0045
16.60	.800	.2452	.0007	.0013	.0081	-.0054
18.66	.894	.3067	.0003	.0008	.0056	-.0041
20.69	.936	.3612	-.0236	.0003	-.0010	-.0008

NACA

TABLE VIII.- AERODYNAMIC CHARACTERISTICS OF MODEL 2
WITH VERTICAL TAIL REMOVED - Continued
(c) $x_s/c = 0.70$; $h/c = 0.10$ and 0.15

α	C_L	C_D	C_m	C_Y	C_l	C_n
$h/c = 0.10$			$\eta_i = 0.15$		$\eta_o = 1.00$	
-2.11	-0.209	0.0567	0.0200	-0.0106	0.0228	0.0108
-.03	-.106	.0537	.0224	-.0130	.0257	.0102
2.04	-.006	.0529	.0216	-.0155	.0280	.0102
4.10	.093	.0546	.0207	-.0179	.0310	.0094
6.18	.199	.0584	.0219	-.0195	.0334	.0083
8.26	.314	.0695	.0170	-.0174	.0362	.0046
10.34	.432	.0944	.0105	-.0065	.0386	-.0021
12.47	.613	.1455	-.0028	-.0004	.0173	-.0037
14.53	.709	.1925	-.0017	-.0004	.0149	-.0050
16.60	.807	.2465	.0046	.0001	.0113	-.0053
18.65	.882	.3040	-.0042	.0025	.0072	-.0052
20.70	.942	.3618	-.0300	.0033	-.0004	-.0020
$h/c = 0.10$			$\eta_i = 0.40$		$\eta_o = 1.00$	
-2.06	-0.149	0.0425	0.0163	-0.0133	0.0112	0.0116
0	-.051	.0393	.0173	-.0140	.0145	.0111
2.08	.055	.0396	.0216	-.0164	.0173	.0112
4.15	.159	.0422	.0229	-.0182	.0201	.0103
6.22	.264	.0481	.0209	-.0208	.0235	.0099
8.30	.379	.0613	.0614	-.0167	.0252	.0065
10.40	.318	.0925	.0026	-.0085	.0214	.0017
12.52	.689	.1456	-.0044	-.0038	.0071	.0013
14.59	.792	.1942	-.0038	-.0007	.0035	-.0015
16.64	.866	.2463	-.0063	.0038	-.0013	-.0023
18.68	.926	.3039	-.0108	.0022	-.0028	-.0017
20.71	.958	.3611	-.0474	.0071	-.0070	-.0019
$h/c = 0.10$			$\eta_i = 0.80$		$\eta_o = 1.00$	
-2.04	-0.109	0.0207	0.0094	-0.0035	0.0020	0.0048
.04	.002	.0186	.0113	-.0040	.0037	.0047
2.12	.113	.0200	.0121	-.0053	.0033	.0046
4.19	.223	.0245	.0116	-.0071	.0065	.0047
6.27	.331	.0322	.0066	-.0075	.0062	.0044
8.36	.462	.0494	-.0016	-.0027	.0065	.0019
10.46	.611	.0869	-.0131	.0019	-.0001	-.0007
12.54	.718	.1401	-.0040	.0038	-.0004	-.0011
14.59	.791	.1905	-.0098	.0017	-.0009	-.0010
16.64	.872	.2506	-.0103	.0009	-.0001	-.0014
18.69	.931	.3070	-.0073	-.0018	-.0009	-.0004
20.69	.937	.3571	-.0381	.0023	-.0002	-.0013
$h/c = 0.10$			$\eta_i = 0.4$		$\eta_o = 0.6$	
-2.06	-0.142	0.0266	0.0102	-0.0067	0.0061	0.0044
.02	-.034	.0247	.0109	-.0075	.0075	.0041
2.09	.073	.0263	.0113	-.0085	.0086	.0044
4.16	.179	.0304	.0132	-.0100	.0116	.0040
6.25	.296	.0377	.0097	-.0109	.0119	.0040
8.32	.409	.0522	.0045	-.0080	.0144	.0015
10.42	.551	.0880	-.0056	-.0049	.0101	.0007
12.53	.704	.1489	-.0055	-.0041	.0057	.0023
14.59	.787	.1935	-.0068	-.0010	.0035	-.0008
16.65	.873	.2494	-.0052	.0017	0	-.0009
18.68	.925	.3065	-.0089	.0019	-.0003	-.0011
20.71	.957	.3664	-.0450	.0010	-.0018	-.0010

α	C_L	C_D	C_m	C_Y	C_l	C_n
$h/c = 0.10$			$\eta_i = 0.20$		$\eta_o = 1.00$	
-2.09	-0.188	0.0540	0.0182	-0.0142	0.0200	0.0118
-.03	-.096	.0510	.0245	-.0159	.0233	.0116
2.05	.008	.0513	.0237	-.0188	.0252	.0115
4.12	.112	.0533	.0273	-.0209	.0298	.0105
6.19	.214	.0575	.0255	-.0222	.0311	.0093
8.27	.325	.0670	.0218	-.0194	.0331	.0061
10.35	.447	.0928	.0172	-.0097	.0380	-.0013
12.47	.615	.1428	.0007	-.0040	.0170	-.0013
14.54	.725	.1946	-.0003	-.0057	.0136	-.0012
16.63	.848	.2555	-.0024	-.0063	.0079	-.0009
18.67	.908	.3080	-.0065	-.0039	.0025	-.0005
20.70	.942	.3549	-.0298	.0073	-.0037	-.0029
$h/c = 0.10$			$\eta_i = 0.60$		$\eta_o = 1.00$	
-2.05	-0.126	0.0305	0.0130	-0.0076	0.0058	0.0083
.03	-.019	.0283	.0140	-.0096	.0087	.0087
2.10	.083	.0291	.0166	-.0105	.0102	.0084
4.17	.193	.0321	.0171	-.0120	.0130	.0081
6.25	.307	.0389	.0162	-.0138	.0147	.0075
8.33	.423	.0541	.0100	-.0095	.0166	.0049
10.45	.587	.0917	-.0112	-.0029	.0058	.0024
12.53	.704	.1391	-.0070	.0029	.0018	-.0007
14.59	.796	.1903	-.0080	.0034	.0011	-.0021
16.64	.860	.2449	-.0124	.0021	-.0013	-.0018
18.68	.922	.3057	-.0158	.0012	-.0006	-.0013
20.71	.957	.3607	-.0386	.0029	-.0075	-.0001
$h/c = 0.10$			$\eta_i = 0.20$		$\eta_o = 0.60$	
-2.09	-0.190	0.0389	0.0167	-0.0083	0.0100	0.0052
-.02	-.093	.0362	.0165	-.0087	.0118	.0045
2.06	.011	.0367	.0177	-.0093	.0138	.0039
4.13	.123	.0403	.0152	-.0101	.0163	.0037
6.20	.230	.0473	.0137	-.0121	.0182	.0026
8.28	.346	.0597	.0057	-.0128	.0234	.0008
10.37	.480	.0861	.0038	.0017	.0207	-.0039
12.48	.627	.1410	-.0049	-.0038	.0092	-.0012
14.54	.730	.1989	-.0049	-.0066	.0146	-.0013
16.62	.843	.2571	.0003	-.0038	.0079	-.0016
18.67	.913	.3104	.0041	-.0047	.0069	-.0018
20.70	.945	.3602	-.0329	-.0013	-.0027	-.0003
$h/c = 0.15$			$\eta_i = 0.15$		$\eta_o = 0.20$	
-2.03	-0.105	0.0191	0.0015	0	0.0013	-0.0006
.04	.001	.0177	-.0005	-.0005	.0011	-.0006
2.12	.111	.0200	-.0004	-.0005	.0021	-.0006
4.19	.219	.0247	-.0024	.0003	.0014	-.0012
6.27	.332	.0333	-.0084	-.0013	.0035	-.0012
8.35	.452	.0496	-.0138	.0052	.0030	-.0041
10.44	.579	.0882	-.0206	.0072	.0015	-.0040
12.52	.694	.1424	-.0173	.0090	-.0008	-.0048
14.58	.771	.1937	-.0185	.0061	-.0011	-.0037
16.65	.873	.2535	-.0124	.0060	-.0059	-.0019
18.68	.924	.3118	-.0092	.0031	-.0050	-.0009
20.71	.957	.3690	-.0225	.0019	.0010	-.0015

TABLE VIII.- AERODYNAMIC CHARACTERISTICS OF MODEL 2
WITH VERTICAL TAIL REMOVED - Continued
(d) $x_s/c = 0.70$; $h/c = 0.15$

α	C_L	C_D	C_m	C_Y	C_l	C_n
$h/c = 0.15$			$\eta_i = 0.15$		$\eta_o = 0.40$	
-2.09	-0.189	0.0412	0.0053	-0.0017	0.0111	0.0010
-.02	-.084	.0386	.0064	-.0030	.0114	.0006
2.06	.022	.0395	.0048	-.0033	.0128	.0004
4.13	.127	.0428	.0038	-.0036	.0154	-.0009
6.20	.233	.0489	-.0011	-.0041	.0165	-.0016
8.28	.349	.0634	-.0105	-.0022	.0207	-.0047
10.37	.477	.0920	-.0180	.0070	.0187	-.0094
12.46	.608	.1446	-.0175	.0052	.0095	-.0071
14.54	.714	.1964	-.0226	.0050	.0043	-.0060
16.59	.796	.2497	-.0096	.0056	.0002	-.0062
18.64	.858	.3052	.0101	-.0004	.0098	-.0070
20.69	.935	.3691	-.0143	-.0012	.0031	-.0037
$h/c = 0.15$			$\eta_i = 0.15$		$\eta_o = 0.80$	
-2.14	-0.252	0.0692	0.0275	-0.0138	0.0269	0.0105
-.07	-.158	.0645	.0286	-.0156	.0296	.0100
2.00	-.052	.0641	.0254	-.0191	.0312	.0100
4.08	.058	.0655	.0244	-.0205	.0337	.0088
6.15	.158	.0704	.0216	-.0217	.0355	.0074
8.23	.268	.0793	.0155	-.0215	.0404	.0040
10.31	.395	.1040	.0092	-.0129	.0414	-.0012
12.42	.549	.1505	-.0017	-.0021	.0307	-.0062
14.49	.649	.1966	.0037	-.0044	.0223	-.0066
16.57	.757	.2458	.0097	.0009	.0146	-.0084
18.64	.859	.3043	.0031	-.0001	.0093	-.0071
20.69	.940	.3676	-.0191	.0018	.0021	-.0052
$h/c = 0.15$			$\eta_i = 0.20$		$\eta_o = 1.00$	
-2.14	-0.263	0.0756	0.0392	-0.0219	0.0286	0.0175
-.07	-.164	.0723	.0401	-.0227	.0311	.0164
2.00	-.068	.0722	.0453	-.0244	.0326	.0155
4.07	.039	.0722	.0428	-.0266	.0369	.0140
6.14	.142	.0753	.0406	-.0274	.0411	.0122
8.22	.256	.0845	.0350	-.0295	.0441	.0099
10.31	.389	.1087	.0304	-.0170	.0442	.0033
12.42	.550	.1504	.0132	-.0107	.0309	-.0015
14.51	.677	.1989	.0122	-.0072	.0222	-.0033
16.58	.786	.2494	.0154	-.0022	.0123	-.0045
18.65	.882	.3047	.0124	-.0043	.0077	-.0041
20.71	.953	.3699	-.0301	-.0018	-.0022	-.0005
$h/c = 0.15$			$\eta_i = 0.60$		$\eta_o = 1.00$	
-2.06	-0.155	0.0408	0.0242	-0.0126	0.0106	0.0133
.01	-.049	.0370	.0262	-.0134	.0131	.0127
2.08	.051	.0376	.0279	-.0155	.0149	.0122
4.16	.159	.0406	.0265	-.0178	.0175	.0119
6.23	.267	.0472	.0240	-.0189	.0202	.0109
8.31	.392	.0616	.0166	-.0195	.0240	.0087
10.43	.566	.0954	-.0047	-.0068	.0107	.0047
12.53	.702	.1402	-.0047	.0013	.0015	-.0007
14.59	.801	.1937	-.0145	.0039	-.0025	-.0015
16.64	.884	.2491	-.0029	.0051	-.0020	-.0030
18.68	.926	.3039	-.0106	.0013	-.0048	-.0018
20.71	.962	.3638	-.0478	.0008	-.0086	.0011

α	C_L	C_D	C_m	C_Y	C_l	C_n
$h/c = 0.15$			$\eta_i = 0.15$		$\eta_o = 0.60$	
-2.12	-0.235	0.0565	0.0173	-0.0081	0.0212	0.0056
-.05	-.129	.0539	.0169	-.0102	.0218	.0055
2.02	-.024	.0525	.0148	-.0121	.0239	.0047
4.09	.078	.0564	.0143	-.0136	.0259	.0041
6.17	.188	.0625	.0106	-.0150	.0278	.0031
8.25	.294	.0727	.0068	-.0138	.0310	0
10.33	.416	.0967	-.0023	-.0022	.0323	-.0070
12.43	.565	.1509	-.0094	-.0005	.0208	-.0052
14.49	.652	.1985	.0014	-.0048	.0216	-.0053
16.57	.760	.2483	.0069	-.0010	.0193	-.0086
18.64	.859	.3071	.0041	-.0018	.0131	-.0074
20.68	.926	.3651	-.0205	.0045	.0007	-.0050
$h/c = 0.15$			$\eta_i = 0.15$		$\eta_o = 1.00$	
-2.13	-0.249	0.0790	0.0299	-0.0189	0.0298	0.0162
-.07	-.157	.0743	.0326	-.0195	.0328	.0148
2.00	-.057	.0738	.0342	-.0229	.0363	.0147
4.08	.051	.0759	.0323	-.0256	.0377	.0142
6.15	.151	.0781	.0316	-.0299	.0429	.0128
8.22	.254	.0844	.0269	-.0277	.0438	.0088
10.30	.378	.1083	.0176	-.0182	.0461	.0020
12.42	.546	.1493	.0026	-.0066	.0281	-.0035
14.49	.650	.1967	.0005	-.0040	.0247	-.0069
16.57	.762	.2463	.0087	.0007	.0180	-.0087
18.64	.867	.3053	.0063	.0018	.0116	-.0091
20.69	.933	.3652	-.0132	.0050	.0018	-.0055
$h/c = 0.15$			$\eta_i = 0.40$		$\eta_o = 1.00$	
-2.09	-0.199	0.0577	0.0315	-0.0207	0.0185	0.0173
-.02	-.094	.0548	.0326	-.0222	.0212	.0169
2.05	-.001	.0542	.0367	-.0245	.0242	.0162
4.12	.103	.0561	.0352	-.0268	.0270	.0156
6.19	.209	.0610	.0332	-.0283	.0301	.0141
8.27	.332	.0725	.0558	-.0302	.0351	.0115
10.36	.461	.0985	.0235	-.0166	.0346	.0057
12.49	.640	.1453	.0120	-.0091	.0153	.0016
14.59	.796	.2012	-.0126	-.0015	.0035	-.0004
16.64	.881	.2496	-.0023	.0051	.0002	-.0027
18.68	.923	.3018	-.0080	.0041	-.0015	-.0030
20.70	.950	.3572	-.0461	.0052	-.0088	-.0007
$h/c = 0.15$			$\eta_i = 0.80$		$\eta_o = 1.00$	
-2.04	-0.131	0.0256	0.0184	-0.0055	0.0034	0.0073
.03	-.023	.0231	.0183	-.0064	.0049	.0067
2.11	.085	.0247	.0203	-.0074	.0064	.0066
4.19	.198	.0284	.0196	-.0095	.0086	.0069
6.25	.298	.0353	.0142	-.0105	.0096	.0062
8.34	.436	.0529	.0058	-.0090	.0122	.0040
10.45	.596	.0894	-.0135	.0034	.0001	.0002
12.53	.702	.1384	-.0046	.0033	-.0013	-.0009
14.59	.800	.1941	-.0133	.0023	-.0017	-.0009
16.64	.884	.2517	-.0006	.0044	-.0047	-.0011
18.68	.924	.3051	-.0040	0	.0002	-.0017
20.71	.962	.3643	-.0343	.0023	-.0041	-.0015

NACA

TABLE VIII.- AERODYNAMIC CHARACTERISTICS OF MODEL 2
WITH VERTICAL TAIL REMOVED
(d) $x_s/c = 0.70$; $h/c = 0.15$ - Concluded

α	C_L	C_D	C_m	C_Y	C_l	C_n
$h/c = 0.15$			$\eta_i = 0.20$		$\eta_o = 0.60$	
-2.12	-0.241	0.0540	0.0262	-0.0124	0.0176	0.0076
-.05	-.141	.0503	.0266	-.0124	.0199	.0068
2.02	-.039	.0514	.0251	-.0131	.0219	.0055
4.10	.070	.0541	.0254	-.0153	.0239	.0048
6.17	.175	.0601	.0246	-.0153	.0260	.0036
8.25	.294	.0699	.0166	-.0181	.0308	.0024
10.33	.422	.0968	.0121	-.0043	.0316	-.0042
12.45	.579	.1473	.0140	-.0081	.0193	-.0017
14.50	.666	.2004	.0065	-.0079	.0214	-.0031
16.58	.799	.2548	.0158	-.0065	.0140	-.0035
18.66	.888	.3094	.0133	-.0079	.0104	-.0029
20.71	.963	.3733	-.0291	-.0054	-.0021	.0008

NACA

TABLE IX.- AERODYNAMIC CHARACTERISTICS OF MODEL 2 WITH MODIFIED
LEADING EDGE; $x_s/c = 0.70$; $h/c = 0$ AND 0.10

α	C_L	C_D	C_m	C_Y	C_l	C_n
$h/c = 0$						
-2.05	-0.129	0.0148	0.0011	-0.0039	-0.0004	0.0014
.03	-.020	.0127	.0007	-.0031	-.0018	.0011
2.10	.088	.0140	0	-.0026	.0001	.0014
4.19	.210	.0177	.0035	-.0033	.0004	.0015
6.26	.321	.0259	.0011	-.0013	-.0001	.0004
8.35	.439	.0367	-.0021	.0003	-.0004	-.0004
10.43	.558	.0519	-.0089	-.0005	.0001	.0001
12.52	.686	.0711	-.0139	-.0004	.0003	.0004
14.60	.800	.0927	-.0165	.0018	-.0012	0
16.68	.926	.1238	-.0219	.0005	-.0018	.0008
18.49	1.009	.2114	-.0201	-.0021	.0030	.0002
20.76	1.034	.3027	-.0198	.0001	.0005	.0009
$h/c = 0.10$			$\eta_i = 0.15$		$\eta_o = 1.00$	
-2.13	-0.241	0.0577	0.0061	-0.0180	0.0239	0.0144
-.06	-.139	.0540	.0138	-.0174	.0236	.0126
2.07	-.042	.0522	.0184	-.0190	.0266	.0119
4.08	.060	.0537	.0177	-.0230	.0287	.0122
6.16	.169	.0579	.0211	-.0214	.0312	.0102
8.24	.281	.0650	.0184	-.0240	.0344	.0094
10.31	.392	.0758	.0172	-.0233	.0354	.0069
12.40	.516	.0891	.0160	-.0274	.0380	.0055
14.48	.635	.1061	.0112	-.0248	.0363	.0031
16.57	.762	.1326	.0027	-.0290	.0353	.0028
18.66	.892	.2011	-.0168	-.0060	.0268	-.0067
20.70	.950	.2758	.0008	.0088	.0140	-.0061

NACA

TABLE X.- AERODYNAMIC CHARACTERISTICS OF MODEL 2 WITH MODIFIED LEADING EDGE AND VERTICAL TAIL REMOVED

(a) $x_s/c = 0.70$; $h/c = 0$, 0.05, and 0.10

α	C_L	C_D	C_m	C_Y	C_l	C_n
h/c = 0						
-2.06	-0.137	0.0135	-0.0010	-0.0010	0.0012	0.0003
.02	-.023	.0115	.0030	-.0006	.0007	-.0001
2.10	.087	.0127	.0008	-.0006	.0008	-.0003
4.19	.214	.0170	.0021	0	.0003	-.0004
6.27	.327	.0246	.0013	0	.0007	-.0003
8.35	.442	.0359	-.0028	.0003	.0005	-.0003
10.43	.567	.0512	-.0069	-.0006	.0008	-.0001
12.52	.685	.0700	-.0136	.0012	-.0005	-.0006
14.60	.809	.0931	-.0188	.0001	.0001	-.0004
16.69	.937	.1222	-.0221	.0026	0	-.0007
18.76	1.032	.2099	-.0330	-.0024	.0044	-.0002
20.77	1.043	.2964	-.0247	-.0014	.0013	-.0005

α	C_L	C_D	C_m	C_Y	C_l	C_n
h/c = 0.05 η_i = 0.15 η_o = 0.40						
-2.05	-0.133	0.0216	-0.0097	-0.0021	0.0012	0.0005
.02	-.025	.0196	-.0074	-.0022	.0020	.0007
2.10	.087	.0210	-.0056	-.0018	.0019	.0007
4.19	.191	.0250	-.0074	-.0019	.0035	.0007
6.25	.303	.0324	-.0072	-.0015	.0031	.0006
8.33	.423	.0439	-.0116	-.0019	.0036	.0006
10.41	.535	.0583	-.0160	-.0019	.0039	.0004
12.50	.661	.0758	-.0182	-.0027	.0049	.0002
14.58	.771	.0970	-.0213	-.0031	.0063	-.0004
16.66	.884	.1238	-.0263	-.0018	.0072	-.0021
18.74	1.003	.1996	-.0382	.0012	.0068	-.0028
20.81	1.044	.2918	-.0176	.0041	.0033	-.0016
h/c = 0.05 η_i = 0.60 η_o = 1.00						
-2.05	-0.132	0.0217	0.0003	-0.0048	0.0017	0.0040
.03	-.029	.0195	.0037	-.0048	.0027	.0040
2.10	.080	.0206	.0060	-.0052	.0042	.0042
4.17	.192	.0243	.0064	-.0055	.0047	.0037
6.26	.310	.0317	.0042	-.0065	.0067	.0037
8.33	.424	.0426	.0006	-.0067	.0057	.0039
10.42	.550	.0573	-.0038	-.0074	.0067	.0031
12.51	.671	.0757	-.0079	-.0082	.0069	.0029
14.59	.792	.0975	-.0101	-.0078	.0064	.0033
16.70	.921	.1262	-.0137	-.0075	.0053	.0032
18.75	1.025	.2091	-.0333	-.0017	.0080	-.0011
20.76	1.036	.2975	-.0256	.0022	.0028	-.0012
h/c = 0.10 η_i = 0.15 η_o = 1.00						
-2.10	-0.205	0.0564	0.0096	-0.0112	0.0241	0.0099
-.06	-.144	.0532	.0130	-.0128	.0262	.0102
2.01	-.043	.0517	.0176	-.0055	.0287	.0091
4.08	.063	.0535	.0185	-.0160	.0294	.0090
6.15	.165	.0573	.0199	-.0184	.0333	.0082
8.24	.274	.0644	.0184	-.0212	.0355	.0072
10.31	.391	.0748	.0174	-.0236	.0385	.0061
12.39	.510	.0897	.0128	-.0261	.0387	.0048
14.48	.632	.1092	.0093	-.0261	.0381	.0038
16.58	.778	.1443	-.0064	-.0192	.0398	-.0021
18.65	.877	.2113	-.0124	-.0008	.0224	-.0074
20.70	.950	.2761	-.0022	.0099	.0115	-.0089

α	C_L	C_D	C_m	C_Y	C_l	C_n
h/c = 0.05 η_i = 0.15 η_o = 1.00						
-2.08	-0.176	0.0343	-0.0034	-0.0062	0.0123	0.0052
-.01	-.068	.0319	-.0081	-.0068	.0142	.0054
2.06	.031	.0320	-.0112	-.0086	.0015	.0052
4.14	.138	.0346	.0055	-.0098	.0171	.0046
6.21	.251	.0405	.0072	-.0118	.0195	.0047
8.29	.366	.0505	.0034	-.0132	.0210	.0045
10.38	.484	.0627	-.0020	-.0145	.0221	.0040
12.55	.612	.0794	-.0022	-.0154	.0229	.0028
14.55	.726	.0995	-.0080	-.0181	.0238	.0019
16.64	.856	.1258	-.0108	-.0168	.0240	.0011
18.73	.992	.2016	-.0388	-.0047	.0142	-.0031
20.76	1.040	.2890	-.0203	-.0050	.0058	-.0020
h/c = 0.10 η_i = 0.15 η_o = 0.40						
-2.10	-0.187	0.0315	-0.0095	-0.0034	0.0085	0.0012
-.01	-.077	.0295	-.0062	-.0028	.0091	.0009
2.06	.029	.0352	-.0031	-.0017	.0102	0
4.13	.135	.0377	-.0022	-.0028	.0104	.0002
6.21	.249	.0437	-.0039	-.0030	.0124	0
8.29	.356	.0525	-.0100	-.0057	.0153	-.0014
10.37	.471	.0649	-.0115	-.0043	.0152	-.0016
12.43	.590	.0814	-.0158	-.0050	.0156	-.0020
14.53	.714	.1027	-.0242	-.0054	.0155	-.0031
16.62	.831	.1292	-.0272	-.0099	.0159	-.0023
18.72	.971	.1915	-.0473	-.0084	.0187	-.0029
20.74	1.004	.2751	-.0253	.0096	.0068	-.0056
h/c = 0.10 η_i = 0.60 η_o = 1.00						
-2.07	-0.152	0.0318	-0.0003	-0.0096	0.0063	0.0085
.01	-.046	.0291	.0074	-.0100	.0081	.0083
2.08	.055	.0290	.0098	-.0106	.0104	.0079
4.20	.166	.0316	.0134	-.0115	.0133	.0073
6.23	.277	.0377	.0144	-.0130	.0148	.0071
8.31	.390	.0476	.0127	-.0134	.0157	.0072
10.39	.509	.0614	.0072	-.0164	.0168	.0066
12.57	.642	.0796	.0033	-.0173	.0172	.0066
14.57	.761	.1006	-.0004	-.0180	.0164	.0064
16.66	.888	.1284	-.0056	-.0180	.0174	.0054
18.75	1.026	.2093	-.0313	.0009	.0040	-.0018
20.77	1.042	.2921	-.0172	.0021	.0013	-.0017

NACA

TABLE X.- AERODYNAMIC CHARACTERISTICS OF MODEL 2 WITH MODIFIED LEADING EDGE AND VERTICAL TAIL REMOVED - Continued

(b) $x_s/c = 0.60$; $h/c = 0.10$

α	C_L	C_D	C_m	C_Y	C_l	C_n
$h/c = 0.10$			$\eta_i = 0.15$		$\eta_o = 0.40$	
-2.07	-0.153	0.0315	-0.0171	-0.0048	0.0044	0.0016
0	-.051	.0305	-.0164	-.0043	.0045	.0012
2.08	.055	.0368	-.0138	-.0050	.0063	.0007
4.15	.160	.0407	-.0148	-.0055	.0084	.0008
6.23	.296	.0474	-.0172	-.0062	.0105	.0002
8.30	.377	.0568	-.0173	-.0073	.0116	.0005
10.38	.489	.0705	-.0217	-.0085	.0125	-.0002
12.46	.598	.0866	-.0264	-.0091	.0142	-.0016
14.58	.722	.1080	-.0433	-.0110	.0147	-.0014
16.62	.840	.1379	-.0395	-.0175	.0150	.0008
18.71	.968	.2086	-.0516	-.0063	.0086	-.0042
20.74	1.002	.2837	-.0243	.0051	.0050	-.0054
$h/c = 0.10$			$\eta_i = 0.15$		$\eta_o = 0.80$	
-2.09	-0.194	0.0501	-0.0137	-0.0108	0.0159	0.0071
-.03	-.097	.0485	-.0076	-.0132	.0172	.0070
2.04	.002	.0493	-.0069	-.0147	.0186	.0070
4.11	.100	.0512	-.0035	-.0177	.0231	.0066
6.18	.202	.0565	-.0045	-.0197	.0258	.0064
8.25	.308	.0651	-.0045	-.0213	.0282	.0056
10.33	.414	.0757	-.0047	-.0240	.0306	.0047
12.42	.544	.0924	-.0049	-.0280	.0330	.0037
14.50	.658	.1129	-.0119	-.0290	.0301	.0033
16.59	.784	.1418	-.0221	-.0336	.0298	.0039
18.68	.918	.2013	-.0327	-.0302	.0379	-.0003
20.71	.960	.2763	-.0144	-.0041	.0190	-.0064
$h/c = 0.10$			$\eta_i = 0.40$		$\eta_o = 1.00$	
-2.06	-0.150	0.0440	-0.0125	-0.0166	0.0053	0.0112
.01	-.039	.0421	-.0044	-.0174	.0097	.0115
2.08	.055	.0434	-.0025	-.0181	.0101	.0112
4.15	.152	.0454	-.0002	-.0196	.0148	.0107
6.22	.261	.0514	.0042	-.0226	.0180	.0104
8.30	.375	.0609	.0066	-.0256	.0222	.0103
10.38	.482	.0735	.0023	-.0274	.0246	.0099
12.47	.611	.0914	.0014	-.0299	.0257	.0093
14.55	.728	.1113	.0010	-.0347	.0285	.0094
16.63	.854	.1409	-.0148	-.0336	.0260	.0093
18.72	.978	.2080	-.0248	-.0106	.0189	-.0002
20.77	1.049	.2949	-.0227	.0062	.0021	-.0030

α	C_L	C_D	C_m	C_Y	C_l	C_n
$h/c = 0.10$			$\eta_i = 0.15$		$\eta_o = 0.60$	
-2.09	-0.180	0.0413	-0.0194	-0.0084	0.0100	0.0038
-.02	-.081	.0394	-.0113	-.0099	.0120	.0045
2.14	.017	.0406	-.0109	-.0107	.0140	.0043
4.13	.123	.0441	-.0095	-.0123	.0159	.0039
6.20	.233	.0500	-.0060	-.0140	.0179	.0036
8.27	.338	.0602	-.0094	-.0156	.0205	.0029
10.35	.445	.0716	-.0111	-.0176	.0232	.0021
12.43	.564	.0887	-.0137	-.0194	.0238	.0014
14.51	.676	.1097	-.0189	-.0218	.0247	.0011
16.70	.809	.1409	-.0246	-.0269	.0247	.0025
18.69	.933	.1989	-.0391	-.0208	.0256	-.0029
20.71	.958	.2745	-.0064	-.0025	.0174	-.0060
$h/c = 0.10$			$\eta_i = 0.15$		$\eta_o = 1.00$	
-2.10	-0.194	0.0568	-0.0107	-0.0132	0.0184	0.0097
-.03	-.104	.0547	-.0058	-.0158	.0207	.0101
2.03	-.009	.0552	-.0070	-.0187	.0236	.0101
4.10	.088	.0571	.0026	-.0212	.0268	.0100
6.18	.199	.0631	.0037	-.0251	.0295	.0098
8.25	.304	.0702	.0036	-.0277	.0335	.0092
10.33	.410	.0806	.0043	-.0307	.0367	.0077
12.41	.531	.0970	.0009	-.0344	.0385	.0069
14.49	.650	.1156	-.0062	-.0372	.0403	.0043
16.58	.782	.1447	-.0169	-.0378	.0347	.0046
18.68	.915	.1973	-.0305	-.0312	.0384	-.0010
20.71	.963	.2785	-.0192	-.0035	.0230	-.0078
$h/c = 0.10$			$\eta_i = 0.60$		$\eta_o = 1.00$	
-2.05	-0.126	0.0328	-0.0115	-0.0106	-0.0005	0.0088
.03	-.021	.0310	-.0058	-.0112	.0018	.0091
2.09	.079	.0313	-.0008	-.0116	.0044	.0088
4.17	.182	.0343	.0015	-.0130	.0078	.0084
6.24	.292	.0408	.0058	-.0138	.0100	.0080
8.32	.407	.0513	.0028	-.0176	.0133	.0080
10.40	.523	.0656	-.0009	-.0194	.0141	.0081
12.49	.652	.0836	-.0045	-.0204	.0145	.0081
14.58	.772	.1055	-.0085	-.0222	.0146	.0085
16.69	.898	.1353	-.0169	-.0195	.0155	.0067
18.76	1.034	.2059	-.0189	.0023	.0054	-.0018
20.77	1.047	.2962	-.0252	.0014	.0007	-.0032

NACA

TABLE X.- AERODYNAMIC CHARACTERISTICS OF MODEL 2 WITH MODIFIED LEADING EDGE AND VERTICAL TAIL REMOVED - Concluded

(c) $x_s/c = 0.80$; $h/c = 0.10$

α	C_L	C_D	C_m	C_Y	C_l	C_n
$h/c = 0.10$			$\eta_i = 0.15$		$\eta_o = 0.40$	
-2.10	-0.206	0.0319	0.0079	-0.0018	0.0109	0.0015
.03	-.101	.0284	.0090	0	.0115	.0001
2.04	.006	.0281	.0098	-.0003	.0111	-.0001
4.12	.114	.0309	.0076	-.0008	.0132	-.0008
6.20	.228	.0364	.0116	.0004	.0133	-.0012
8.28	.344	.0457	.0096	.0014	.0129	-.0025
10.36	.466	.0592	.0043	-.0008	.0145	-.0028
12.45	.588	.0757	.0002	-.0009	.0147	-.0035
14.53	.699	.0956	-.0060	-.0024	.0158	-.0041
16.61	.823	.1210	-.0068	-.0038	.0168	-.0046
18.70	.949	.1902	-.0260	.0088	.0091	-.0083
20.74	1.003	.2755	-.0154	.0192	-.0012	-.0086
$h/c = 0.10$			$\eta_i = 0.15$		$\eta_o = 1.00$	
-2.15	-0.276	0.0565	0.0329	-0.0087	0.0295	0.0105
-.07	-.165	.0517	.0376	-.0101	.0306	.0098
1.99	-.076	.0489	.0365	-.0119	.0313	.0091
4.07	.043	.0494	.0386	-.0138	.0331	.0081
6.14	.148	.0521	.0372	-.0145	.0362	.0069
8.22	.260	.0585	.0379	-.0166	.0380	.0057
10.30	.378	.0697	.0305	-.0181	.0386	.0048
12.38	.495	.0814	.0285	-.0189	.0388	.0029
14.47	.621	.1015	.0211	-.0182	.0357	.0019
16.56	.745	.1209	.0202	-.0194	.0355	0
18.67	.904	.1869	-.0116	-.0149	.0325	-.0031
20.70	.955	.2732	.0033	.0074	.0116	-.0074
$h/c = 0.10$			$\eta_i = 0.60$		$\eta_o = 1.00$	
-2.08	-0.172	0.0306	0.0142	-0.0081	0.0119	0.0078
-.01	-.065	.0275	.0186	-.0083	.0118	.0076
2.07	.046	.0268	.0210	-.0086	.0137	.0069
4.15	.155	.0298	.0224	-.0092	.0142	.0066
6.23	.267	.0357	.0233	-.0106	.0157	.0065
8.31	.382	.0451	.0211	-.0126	.0177	.0059
10.39	.504	.0586	.0183	-.0132	.0178	.0062
12.48	.628	.0761	.0080	-.0146	.0178	.0052
14.56	.753	.0969	.0033	-.0130	.0173	.0044
16.65	.872	.1234	.0005	-.0155	.0169	.0044
18.75	1.024	.2085	-.0318	-.0065	.0060	.0006
20.77	1.049	.2963	-.0186	-.0013	.0008	-.0013

α	C_L	C_D	C_m	C_Y	C_l	C_n
$h/c = 0.10$			$\eta_i = 0.15$		$\eta_o = 0.60$	
-2.14	-0.257	0.0412	0.0121	-0.0050	0.0177	0.0042
-.06	-.145	.0368	.0162	-.0051	.0196	.0035
2.01	-.036	.0355	.0191	-.0038	.0198	.0022
4.09	.073	.0371	.0158	-.0058	.0201	.0020
6.17	.190	.0416	.0190	-.0064	.0220	.0012
8.25	.303	.0498	.0164	-.0062	.0231	.0004
10.34	.425	.0619	.0118	-.0056	.0224	-.0012
12.42	.540	.0769	.0091	-.0066	.0234	-.0017
14.50	.659	.0955	.0023	-.0083	.0249	-.0030
16.59	.784	.1203	.0035	-.0187	.0339	-.0046
18.69	.930	.1786	-.0204	-.0066	.0245	-.0059
20.71	.962	.2685	-.0042	.0089	.0116	-.0075
$h/c = 0.10$			$\eta_i = 0.40$		$\eta_o = 1.00$	
-2.11	-0.210	0.0416	0.0246	-0.0118	0.0213	0.0108
-.04	-.110	.0374	.0280	-.0131	.0210	.0104
2.04	-.004	.0362	.0302	-.0140	.0223	.0098
4.12	.108	.0378	.0336	-.0153	.0236	.0090
6.19	.217	.0427	.0334	-.0163	.0250	.0087
8.27	.333	.0504	.0320	-.0175	.0272	.0071
10.36	.454	.0626	.0277	-.0189	.0283	.0068
12.44	.576	.0785	.0224	-.0199	.0278	.0056
14.53	.704	.0974	.0162	-.0202	.0274	.0047
16.62	.828	.1225	.0128	-.0197	.0264	.0032
18.72	.975	.2009	-.0148	-.0129	.0182	.0008
20.76	1.042	.2965	-.0182	.0053	.0015	-.0018
$h/c = 0.10$			$\eta_i = 0.80$		$\eta_o = 1.00$	
-2.06	-0.144	0.0217	-0.0042	-0.0042	0.0053	0.0044
.02	-.034	.0189	.0115	-.0044	.0043	.0041
2.09	.072	.0195	.0116	-.0045	.0061	.0036
4.17	.186	.0228	.0121	-.0053	.0071	.0037
6.25	.296	.0300	.0092	-.0054	.0070	.0034
8.33	.417	.0406	.0071	-.0062	.0075	.0035
10.42	.541	.0555	.0023	-.0063	.0071	.0035
12.50	.668	.0748	-.0051	-.0092	.0083	.0036
14.59	.793	.0968	-.0076	-.0072	.0065	.0033
16.68	.922	.1276	-.0158	-.0103	.0026	.0047
18.75	1.026	.2069	-.0303	-.0039	.0054	-.0004
20.77	1.047	.2947	-.0168	-.0003	.0014	-.0005

NACA

TABLE XI.- AERODYNAMIC CHARACTERISTICS OF MODEL 3

(a) $x_s/c = 0.70$; $h/c = 0$ and 0.05

α	C_L	C_D	C_m	C_Y	C_l	C_n
$h/c = 0$						
-2.03	-0.103	0.0127	0.0233	0.0001	0.0019	0.0001
.04	-.002	.0109	.0138	-.0004	.0022	.0004
2.11	.099	.0123	.0013	-.0008	.0016	.0004
4.18	.198	.0163	-.0071	-.0016	.0021	.0005
6.25	.300	.0237	-.0193	-.0029	.0021	.0013
8.32	.403	.0368	-.0294	-.0013	.0015	.0003
10.39	.497	.0576	-.0422	-.0013	.0020	.0002
12.46	.602	.0910	-.0492	.0001	.0015	-.0004
14.53	.702	.1358	-.0570	.0001	.0015	-.0007
16.59	.792	.1906	-.0645	-.0018	.0015	.0001
18.66	.881	.2532	-.0690	-.0014	.0010	.0001
20.71	.958	.3208	-.0834	-.0011	.0021	-.0006

α	C_L	C_D	C_m	C_Y	C_l	C_n
$h/c = 0.05$			$\eta_i = 0.15$		$\eta_o = 0.20$	
-2.03	-0.099	0.0150	0.0189	0.0024	0.0025	-0.0012
.04	.004	.0137	.0082	.0020	.0015	-.0012
2.11	.107	.0152	-.0051	.0008	.0022	-.0005
4.18	.204	.0195	-.0160	.0008	.0022	-.0007
6.25	.298	.0271	-.0268	-.0009	.0021	-.0001
8.32	.402	.0404	-.0361	.0009	.0015	-.0004
10.39	.497	.0608	-.0473	-.0004	.0019	-.0005
12.46	.600	.0944	-.0575	-.0010	.0022	-.0006
14.53	.704	.1394	-.0655	.0005	.0023	-.0010
16.60	.800	.1942	-.0719	-.0001	.0009	-.0006
18.66	.883	.2574	-.0771	.0001	-.0004	.0006
20.72	.974	.3264	-.0846	.0008	.0002	.0001
$h/c = 0.05$			$\eta_i = 0.15$		$\eta_o = 0.60$	
-2.05	-0.127	0.0277	0.0179	0.0009	0.0052	0.0013
.02	-.031	.0260	.0076	-.0010	.0072	.0021
2.08	.064	.0266	-.0006	-.0018	.0073	.0020
4.15	.156	.0297	-.0110	-.0026	.0085	.0021
6.22	.259	.0359	-.0229	-.0044	.0084	.0024
8.29	.352	.0472	-.0314	-.0046	.0099	.0017
10.35	.449	.0642	-.0405	-.0026	.0087	0
12.43	.552	.0937	-.0498	.0010	.0076	-.0015
14.50	.652	.1358	-.0591	.0019	.0063	-.0025
16.57	.753	.1893	-.0631	.0007	.0073	-.0031
18.64	.851	.2552	-.0736	.0004	.0053	-.0028
20.70	.946	.3255	-.0829	.0022	.0056	-.0042
$h/c = 0.05$			$\eta_i = 0.15$		$\eta_o = 1.00$	
-2.06	-0.147	0.0316	0.0239	0.0003	0.0112	0.0026
0	-.054	.0293	.0188	-.0003	.0126	.0026
2.07	.036	.0299	.0102	-.0038	.0144	.0036
4.14	.138	.0322	.0002	-.0048	.0164	.0035
6.20	.231	.0378	-.0104	-.0071	.0170	.0033
8.27	.334	.0486	-.0215	-.0056	.0147	.0019
10.34	.428	.0642	-.0313	-.0042	.0136	.0007
12.42	.536	.0935	-.0446	-.0017	.0117	-.0010
14.49	.649	.1365	-.0544	.0007	.0087	-.0022
16.56	.748	.1876	-.0632	-.0001	.0068	-.0029
18.64	.855	.2559	-.0748	.0007	.0041	-.0032
20.70	.948	.3267	-.0859	.0022	.0052	-.0031

α	C_L	C_D	C_m	C_Y	C_l	C_n
$h/c = 0.05$			$\eta_i = 0.15$		$\eta_o = 0.40$	
-2.04	-0.112	0.0217	0.0122	0.0040	0.0014	-0.0014
.03	-.017	.0203	.0026	.0025	.0030	-.0004
2.10	.086	.0218	-.0052	.0013	.0030	.0001
4.16	.176	.0253	-.0170	-.0006	.0039	.0008
6.23	.273	.0327	-.0294	-.0010	.0040	.0005
8.30	.374	.0450	-.0381	-.0023	.0044	.0010
10.37	.465	.0633	-.0465	-.0016	.0049	.0001
12.44	.566	.0942	-.0557	-.0003	.0046	-.0008
14.51	.676	.1373	-.0630	.0022	.0025	-.0013
16.58	.767	.1890	-.0698	.0017	.0013	-.0012
18.64	.863	.2557	-.0771	.0010	.0016	-.0011
20.71	.956	.3271	-.0862	0	.0052	-.0025
$h/c = 0.05$			$\eta_i = 0.15$		$\eta_o = 0.80$	
-2.06	-0.144	0.0306	0.0215	0.0003	0.0100	0.0024
.01	-.049	.0285	.0146	-.0021	.0109	.0036
2.07	.042	.0286	.0051	-.0041	.0125	.0038
4.14	.141	.0316	-.0033	-.0048	.0131	.0036
6.21	.240	.0375	-.0153	-.0063	.0142	.0033
8.28	.336	.0477	-.0243	-.0058	.0141	.0022
10.35	.437	.0644	-.0333	-.0032	.0138	0
12.42	.540	.0951	-.0467	-.0013	.0114	-.0011
14.49	.648	.1368	-.0570	.0009	.0090	-.0022
16.57	.755	.1906	-.0661	.0003	.0066	-.0028
18.64	.858	.2557	-.0727	.0017	.0036	-.0037
20.70	.946	.3250	-.0857	.0031	.0033	-.0039
$h/c = 0.05$			$\eta_i = 0.20$		$\eta_o = 1.00$	
-2.06	-0.137	0.0296	0.0252	-0.0013	0.0096	00.0030
.01	-.040	.0278	.0182	-.0039	.0116	.0042
2.07	.049	.0284	.0105	-.0044	.0131	.0035
4.14	.148	.0316	.0015	-.0060	.0153	.0037
6.21	.244	.0373	-.0108	-.0081	.0152	.0038
8.28	.346	.0476	-.0211	-.0092	.0156	.0029
10.35	.445	.0643	-.0317	-.0055	.0135	.0007
12.43	.555	.0954	-.0453	-.0044	.0111	-.0002
14.51	.667	.1391	-.0556	.0011	.0069	-.0022
16.58	.774	.1948	-.0673	-.0025	.0056	-.0013
18.65	.876	.2610	-.0732	-.0025	.0057	-.0021
20.71	.953	.3266	-.0798	-.0011	.0047	-.0022

NACA

TABLE XI.- AERODYNAMIC CHARACTERISTICS OF MODEL 3 - Continued

(b) $x_s/c = 0.70$; $h/c = 0.05$ and 0.10

α	C_L	C_D	C_m	C_Y	C_l	C_n
h/c = 0.05			$\eta_i = 0.40$		$\eta_o = 1.00$	
-2.04	-0.113	0.0222	0.0266	-0.0026	0.0062	0.0033
.03	-.020	.0206	.0181	-.0038	.0073	.0038
2.09	.076	.0217	.0079	-.0045	.0083	.0040
4.16	.175	.0251	-.0021	-.0059	.0103	.0037
6.24	.279	.0317	-.0138	-.0069	.0108	.0033
8.30	.373	.0434	-.0244	-.0064	.0105	.0025
10.37	.476	.0627	-.0374	-.0031	.0083	.0008
12.45	.589	.0960	-.0497	-.0030	.0057	.0007
14.53	.704	.1410	-.0567	-.0014	.0044	-.0003
16.59	.779	.1911	-.0617	-.0030	.0043	-.0003
18.66	.882	.2548	-.0686	-.0029	.0042	-.0017
20.71	.949	.3210	-.0823	.0012	.0026	-.0024
h/c = 0.05			$\eta_i = 0.80$		$\eta_o = 1.00$	
-2.04	-0.111	0.0137	0.0269	-0.0005	0.0017	0.0010
.04	-.007	.0120	.0169	-.0013	.0031	.0016
2.11	.094	.0132	.0061	-.0013	.0036	.0010
4.17	.189	.0167	-.0049	-.0017	.0037	.0013
6.25	.294	.0238	-.0174	-.0032	.0033	.0017
8.32	.395	.0368	-.0280	-.0009	.0024	.0006
10.39	.499	.0568	-.0390	-.0005	.0025	-.0004
12.46	.598	.0896	-.0481	-.0003	.0022	-.0003
14.53	.700	.1351	-.0561	.0001	.0014	-.0005
16.60	.794	.1906	-.0638	-.0011	.0006	-.0002
18.66	.885	.2553	-.0709	-.0018	.0001	.0010
20.71	.953	.3194	-.0821	-.0007	.0027	-.0005
h/c = 0.05			$\eta_i = 0.40$		$\eta_o = 0.60$	
-2.03	-0.097	0.0183	0.0170	-0.0013	0.0017	0.0013
0	.003	.0169	.0089	-.0012	.0013	.0013
4.18	.198	.0225	-.0120	-.0025	.0036	.0014
6.25	.296	.0298	-.0245	-.0038	.0038	.0017
8.32	.393	.0420	-.0331	-.0042	.0048	.0015
10.39	.491	.0619	-.0433	-.0026	.0042	.0005
12.45	.594	.0942	-.0525	-.0021	.0037	.0003
14.53	.697	.1399	-.0585	-.0003	.0026	0
16.59	.785	.1921	-.0611	-.0022	.0047	-.0014
18.65	.878	.2545	-.0669	-.0010	.0028	-.0018
20.70	.947	.3196	-.0813	-.0004	.0018	-.0017
h/c = 0.10			$\eta_i = 0.15$		$\eta_o = 0.20$	
-2.03	-0.096	0.0191	0.0160	0.0040	0.0013	-0.0030
.04	.006	.0176	.0036	.0040	.0017	-.0028
2.11	.104	.0191	-.0061	.0017	.0025	-.0016
4.18	.203	.0233	-.0181	-.0006	.0027	-.0006
6.24	.293	.0309	-.0288	.0005	.0019	-.0011
8.31	.391	.0439	-.0408	-.0006	.0028	-.0008
10.38	.489	.0640	-.0499	-.0014	.0022	-.0003
12.45	.591	.0960	-.0575	-.0008	.0026	-.0012
14.53	.698	.1407	-.0642	.0003	.0004	-.0009
16.60	.794	.1959	-.0752	.0026	.0018	-.0004
18.66	.884	.2596	-.0799	-.0018	-.0016	.0007
20.72	.967	.3279	-.0906	-.0029	-.0024	.0022

α	C_L	C_D	C_m	C_Y	C_l	C_n
h/c = 0.05			$\eta_i = 0.60$		$\eta_o = 1.00$	
-2.04	-0.112	0.0172	0.0267	-0.0012	0.0035	0.0017
.03	-.015	.0154	.0181	-.0019	.0050	.0020
2.10	.085	.0167	.0080	-.0013	.0043	.0018
4.17	.186	.0199	-.0018	-.0045	.0068	.0029
6.24	.285	.0267	-.0129	-.0056	.0067	.0032
8.31	.385	.0394	-.0241	-.0041	.0059	.0019
10.38	.492	.0602	-.0391	-.0010	.0034	.0010
12.46	.598	.0921	-.0473	-.0025	.0029	.0007
14.53	.696	.1349	-.0550	-.0005	.0030	-.0004
16.59	.791	.1907	-.0659	-.0008	.0020	-.0010
18.66	.881	.2538	-.0694	-.0009	-.0009	.0007
20.71	.957	.3182	-.0791	-.0013	.0003	.0005
h/c = 0.05			$\eta_i = 0.20$		$\eta_o = 0.40$	
-2.02	-0.092	0.0203	0.0094	0.0040	0.0003	-0.0025
.05	.009	.0192	.0008	.0013	.0020	-.0005
2.11	.106	.0208	-.0107	.0012	.0016	-.0008
4.19	.209	.0249	-.0201	.0001	.0029	-.0004
6.25	.300	.0327	-.0314	-.0009	.0026	.0001
8.32	.393	.0453	-.0389	-.0025	.0038	.0003
10.38	.491	.0647	-.0498	-.0004	.0031	-.0005
12.46	.599	.0981	-.0582	-.0011	.0030	-.0009
14.53	.696	.1410	-.0667	.011	.0016	-.0012
16.59	.784	.1937	-.0736	-.0007	.0012	-.0010
18.66	.880	.2597	-.0749	.0008	.0024	-.0012
20.70	.939	.3232	-.0806	-.0014	.0038	-.0017
h/c = 0.05			$\eta_i = 0.40$		$\eta_o = 0.80$	
-2.05	-0.122	0.0217	0.0244	-0.0014	0.0049	0.0017
.02	-.029	.0199	.0162	-.0031	.0055	.0029
2.09	.072	.0209	.0081	-.0040	.0067	.0029
4.16	.168	.0243	-.0045	-.0046	.0069	.0034
6.23	.267	.0307	-.0152	-.0055	.0074	.0027
8.30	.369	.0424	-.0247	-.0060	.0082	.0029
10.37	.468	.0613	-.0363	-.0041	.0075	.0015
12.45	.579	.0938	-.0481	-.0030	.0059	.0004
14.52	.690	.1393	-.0585	-.0013	.0040	-.0001
16.59	.780	.1905	-.0609	-.0029	.0054	-.0012
18.65	.871	.2526	-.0691	-.0004	.0031	-.0016
20.71	.954	.3204	-.0825	-.0006	.0027	-.0020
h/c = 0.10			$\eta_i = 0.15$		$\eta_o = 0.40$	
-2.06	-0.139	0.0344	0.0293	-0.0014	0.0053	0.0022
0	-.064	.0322	.0145	-.0008	.0075	.0018
2.07	.036	.0330	.0039	-.0016	.0080	.0014
4.13	.132	.0362	-.0077	-.0027	.0099	.0010
6.19	.223	.0422	-.0198	-.0038	.0108	.0011
8.27	.324	.0539	-.0296	-.0050	.0115	.0009
10.33	.408	.0691	-.0362	-.0043	.0129	-.0009
12.37	.477	.0855	-.0442	-.0013	.0107	-.0024
14.48	.623	.1392	-.0569	.0021	.0080	-.0051
16.54	.722	.1892	-.0660	.0011	.0083	-.0049
18.61	.816	.2496	-.0683	.0051	.0086	-.0073
20.68	.922	.3273	-.0781	.0034	.0074	-.0082

NACA

TABLE XI.- AERODYNAMIC CHARACTERISTICS OF MODEL 3 - Continued

(c) $x_s/c = 0.70$; $h/c = 0.10$

α	C_L	C_D	C_m	C_Y	C_l	C_n
$h/c = 0.10$			$\eta_i = 0.15$		$\eta_o = 0.60$	
-2.09	-0.180	0.0428	0.0300	-0.0016	0.0096	0.0042
-.02	-.092	.0402	.0211	-.0024	.0115	.0040
2.04	.002	.0393	.0103	-.0041	.0138	.0039
4.11	.104	.0428	.0015	-.0032	.0150	.0021
6.18	.194	.0462	-.0103	-.0066	.0165	.0030
8.25	.296	.0565	-.0185	-.0070	.0169	.0019
10.31	.388	.0733	-.0294	-.0057	.0180	-.0012
12.38	.491	.1005	-.0419	-.0012	.0159	-.0041
14.46	.595	.1401	-.0493	.0014	.0138	-.0059
16.52	.685	.1877	-.0552	.0023	.0165	-.0076
18.60	.798	.2516	-.0605	.0047	.0146	-.0099
20.66	.885	.3182	-.0736	.0037	.0134	-.0098
$h/c = 0.10$			$\eta_i = 0.15$		$\eta_o = 1.00$	
-2.10	-0.206	0.0511	0.0368	-0.0053	0.0187	0.0085
-.04	-.121	.0474	.0326	-.0058	.0208	.0077
2.02	-.023	.0471	.0237	-.0080	.0234	.0072
4.09	.068	.0474	.0162	-.0096	.0272	.0063
6.16	.165	.0520	.0040	-.0089	.0269	.0046
8.23	.265	.0601	-.0071	-.0089	.0265	.0028
10.30	.366	.0761	-.0198	-.0070	.0257	-.0005
12.37	.471	.1020	-.0346	-.0042	.0224	-.0032
14.48	.576	.1383	-.0442	.0001	.0172	-.0057
16.52	.681	.1882	-.0529	.0027	.0187	-.0082
18.59	.789	.2500	-.0598	.0045	.0134	-.0094
20.66	.890	.3172	-.0699	.0013	.0140	-.0084
$h/c = 0.10$			$\eta_i = 0.40$		$\eta_o = 1.00$	
-2.07	-0.159	0.0325	0.0411	-0.0069	0.0121	0.0081
0	-.063	.0298	.0313	-.0083	.0147	.0085
2.06	.028	.0301	.0240	-.0098	.0169	.0080
4.13	.126	.0331	.0152	-.0127	.0185	.0088
6.19	.220	.0377	.0042	-.0120	.0202	.0069
8.27	.327	.0483	-.0098	-.0136	.0193	.0064
10.34	.426	.0636	-.0172	-.0105	.0184	.0038
12.41	.535	.0934	-.0307	-.0093	.0165	.0023
14.50	.662	.1404	-.0481	-.0051	.0119	.0005
16.58	.774	.1941	-.0622	-.0038	.0060	-.0011
18.65	.868	.2531	-.0691	-.0015	.0044	-.0016
20.70	.950	.3185	-.0778	.0001	.0018	-.0007
$h/c = 0.10$			$\eta_i = 0.80$		$\eta_o = 1.00$	
-2.04	-0.113	0.0131	0.0289	-0.0017	0.0043	0.0023
.03	-.014	.0130	.0201	-.0008	.0057	.0013
2.10	.084	.0144	.0127	-.0029	.0055	.0021
4.17	.184	.0180	-.0012	-.0027	.0058	.0016
6.25	.283	.0245	-.0125	-.0033	.0054	.0016
8.31	.391	.0370	-.0261	-.0024	.0046	.0009
10.39	.491	.0566	-.0400	0	.0026	-.0002
12.46	.601	.0907	-.0473	0	.0016	-.0002
14.53	.701	.1354	-.0565	.0021	.0007	-.0005
16.59	.791	.1915	-.0628	-.0016	.0011	0
18.66	.889	.2547	-.0689	-.0014	.0015	-.0006
20.71	.954	.3197	-.0837	.0013	-.0001	-.0003

α	C_L	C_D	C_m	C_Y	C_l	C_n
$h/c = 0.10$			$\eta_i = 0.15$		$\eta_o = 0.80$	
-2.10	-0.206	0.0492	0.0372	-0.0051	0.0167	0.0079
-.04	-.113	.0457	.0280	-.0048	.0186	.0066
2.02	-.024	.0446	.0199	-.0054	.0194	.0059
4.09	.071	.0463	.0101	-.0084	.0227	.0057
6.16	.169	.0509	-.0017	-.0092	.0236	.0046
8.23	.271	.0581	-.0106	-.0103	.0241	.0030
10.30	.370	.0759	-.0248	-.0076	.0241	-.0012
12.37	.477	.1018	-.0364	-.0030	.0216	-.0033
14.45	.583	.1383	-.0435	.0034	.0189	-.0079
16.52	.682	.1885	-.0556	.0022	.0178	-.0084
18.60	.796	.7536	-.0637	.0035	.0142	-.0088
20.66	.880	.3172	-.0742	.0031	.0134	-.0086
$h/c = 0.10$			$\eta_i = 0.20$		$\eta_o = 1.00$	
-2.10	-0.197	0.0478	0.0416	-0.0075	0.0180	0.0100
-.04	-.111	.0439	.0351	-.0085	.0205	.0093
2.03	-.018	.0435	.0272	-.0107	.0227	.0091
4.09	.073	.0459	.0168	-.0116	.0251	.0084
6.16	.169	.0487	.0085	-.0138	.0260	.0073
8.23	.278	.0569	-.0026	-.0129	.0260	.0054
10.31	.383	.0718	-.0163	-.0111	.0239	.0027
12.38	.479	.0971	-.0289	-.0076	.0223	-.0004
14.45	.581	.1341	-.0384	-.0038	.0195	-.0031
16.52	.690	.1861	-.0491	-.0031	.0175	-.0040
18.61	.811	.2517	-.0596	-.0029	.0127	-.0046
20.68	.909	.3191	-.0731	-.0018	.0110	-.0046
$h/c = 0.10$			$\eta_i = 0.60$		$\eta_o = 1.00$	
-2.05	-0.133	0.0214	0.0321	-0.0027	0.0078	0.0045
.02	-.029	.0195	.0261	-.0043	.0093	.0050
2.09	.065	.0202	.0173	-.0058	.0107	.0053
4.15	.161	.0233	.0041	-.0058	.0118	.0046
6.22	.256	.0295	-.0058	-.0069	.0107	.0047
8.29	.358	.0405	-.0162	-.0081	.0120	.0041
10.36	.464	.0594	-.0284	-.0045	.0100	.0024
12.45	.587	.0918	-.0457	-.0018	.0047	.0008
14.53	.700	.1353	-.0557	.0007	.0018	-.0007
16.59	.786	.1886	-.0641	-.0005	.0027	-.0012
18.65	.878	.2526	-.0697	-.0020	-.0001	.0009
20.71	.957	.3212	-.0824	-.0022	.0006	.0010
$h/c = 0.10$			$\eta_i = 0.20$		$\eta_o = 0.40$	
-2.07	-0.155	0.0301	0.0252	-0.0043	0.0060	0.0045
0	-0.064	.0277	.0174	-.0055	.0072	.0047
2.06	0.032	.0285	.0079	-.0049	.0077	.0039
4.13	.133	.0314	-.0026	-.0069	.0105	.0041
6.20	.225	.0375	-.0138	-.0064	.0107	.0028
8.27	.330	.0486	-.0257	-.0073	.0110	.0025
10.34	.425	.0650	-.0318	-.0065	.0109	.0015
12.41	.532	.0957	-.0459	-.0028	.0093	-.0006
14.48	.628	.1354	-.0506	.0008	.0073	-.0021
16.56	.738	.1885	-.0597	.0011	.0054	-.0033
18.62	.830	.2521	-.0669	-.0008	.0044	-.0024
20.68	.917	.3217	-.0785	-.0005	.0077	-.0043

NACA

TABLE XI.- AERODYNAMIC CHARACTERISTICS OF MODEL 3 - Continued

(d) $x_s/c = 0.70$; $h/c = 0.10$ and 0.15

α	C_L	C_D	C_m	C_Y	C_l	C_n
$h/c = 0.10$			$\eta_i = 0.40$		$\eta_o = 0.60$	
-2.06	-0.136	0.0253	0.0300	-0.0061	0.0065	0.0057
.01	-.045	.0234	.0222	-.0051	.0074	.0046
2.08	.051	.0241	.0127	-.0072	.0089	.0049
4.15	.153	.0277	.0018	-.0087	.0101	.0054
6.21	.248	.0338	-.0086	-.0091	.0107	.0049
8.28	.345	.0448	-.0199	-.0097	.0116	.0041
10.35	.444	.0624	-.0295	-.0084	.0114	.0028
12.42	.549	.0914	-.0382	-.0071	.0101	.0012
14.50	.658	.1378	-.0479	-.0061	.0096	.0016
16.58	.770	.1915	-.0616	-.0044	.0065	-.0006
18.64	.863	.2504	-.0681	-.0034	.0036	-.0007
20.70	.946	.3191	-.0821	.0005	.0036	-.0028
$h/c = 0.15$			$\eta_i = 0.15$		$\eta_o = 0.20$	
-2.04	-0.113	0.0222	0.0162	0.0018	0.0018	-0.0018
.04	-.001	.0210	.0050	.0017	.0015	-.0016
2.10	.091	.0226	-.0050	-.0004	.0016	-.0006
4.17	.186	.0270	-.0136	-.0008	.0018	-.0007
6.24	.286	.0343	-.0245	-.0027	.0023	.0003
8.31	.381	.0465	-.0346	-.0041	.0039	.0007
10.37	.478	.0659	-.0445	-.0037	.0035	-.0001
12.45	.582	.0974	-.0538	-.0027	.0030	-.0007
14.52	.684	.1412	-.0617	-.0018	.0029	-.0006
16.59	.783	.1955	-.0692	-.0027	.0021	-.0004
18.65	.876	.2615	-.0800	-.0029	-.0010	.0006
20.71	.964	.3288	-.0859	-.0030	-.0034	.0026
$h/c = 0.15$			$\eta_i = 0.15$		$\eta_o = 0.60$	
-2.12	-0.225	0.0603	0.0354	-0.0030	0.0172	0.0052
-.05	-.131	.0555	.0320	-.0029	.0175	.0046
2.01	-.036	.0562	.0208	-.0034	.0186	.0031
4.08	.050	.0579	.0098	-.0044	.0214	.0016
6.15	.156	.0619	-.0013	-.0056	.0232	.0009
8.21	.243	.0723	-.0150	-.0087	.0257	-.0006
10.28	.341	.0894	-.0228	-.0090	.0270	-.0022
12.34	.426	.1115	-.0266	-.0040	.0259	-.0079
14.42	.538	.1486	-.0414	.0016	.0250	-.0103
16.48	.031	.1931	-.0476	.0026	.0227	-.0127
18.56	.741	.2519	-.0530	.0061	.0184	-.0145
20.62	.828	.3130	-.0639	.0067	.0171	-.0155
$h/c = 0.15$			$\eta_i = 0.15$		$\eta_o = 1.00$	
-2.14	-0.253	0.0714	0.0504	-0.0059	0.0248	0.0103
-.07	-.158	.0633	.0437	-.0064	.0280	.0088
1.99	-.067	.0645	.0339	-.0056	.0307	.0060
4.06	.024	.0653	.0270	-.0076	.0316	.0054
6.12	.116	.0681	.0149	-.0118	.0329	.0053
8.19	.215	.0771	.0019	-.0113	.0360	.0014
10.26	.320	.0923	-.0101	-.0115	.0345	-.0010
12.33	.417	.1125	-.0170	-.0048	.0343	-.0074
14.41	.527	.1493	-.0384	.0007	.0255	-.0104
16.48	.632	.1968	-.0441	.0013	.0266	-.0124
18.55	.732	.2525	-.0494	.0047	.0210	-.0145
20.63	.839	.3157	-.0567	.0066	.0175	-.0162

α	C_L	C_D	C_m	C_Y	C_l	C_n
$h/c = 0.10$			$\eta_i = 0.40$		$\eta_o = 0.80$	
-2.07	-0.156	0.0305	0.0353	-0.0063	0.0100	0.0067
0	-.055	.0277	.0259	-.0082	.0129	.0074
2.06	.033	.0282	.0181	-.0096	.0143	.0077
4.13	.135	.0311	.0100	-.0111	.0160	.0074
6.20	.231	.0367	-.0009	-.0113	.0164	.0061
8.27	.330	.0469	-.0118	-.0145	.0179	.0060
10.34	.432	.0635	-.0219	-.0095	.0160	.0032
12.42	.537	.0930	-.0339	-.0078	.0153	.0016
14.50	.660	.1389	-.0483	-.0060	.0121	.0005
16.58	.778	.1930	-.0618	-.0047	.0079	-.0012
18.65	.871	.2517	-.0679	-.0023	.0053	-.0015
20.70	.946	.3175	-.0816	-.0001	.0031	-.0016
$h/c = 0.15$			$\eta_i = 0.15$		$\eta_o = 0.40$	
-2.10	-0.194	0.0458	0.0306	-0.0001	0.0081	0.0020
-.03	-.094	.0437	.0186	-.0008	.0096	.0014
2.04	0	.0451	.0072	-.0035	.0121	.0017
4.11	.095	.0475	-.0028	-.0046	.0146	.0007
6.17	.189	.0531	-.0152	-.0060	.0151	.0004
8.24	.289	.0632	-.0268	-.0047	.0157	-.0017
10.31	.382	.0804	-.0358	-.0026	.0146	-.0041
12.38	.484	.1069	-.0452	.0006	.0148	-.0076
14.45	.582	.1451	-.0556	.0030	.0125	-.0090
16.52	.690	.1941	-.0648	.0048	.0099	-.0102
18.58	.777	.2510	-.0651	.0056	.0074	-.0108
20.65	.871	.3215	-.0731	.0070	.0099	-.0116
$h/c = 0.15$			$\eta_i = 0.15$		$\eta_o = 0.80$	
-2.13	-0.243	0.0673	0.0469	-0.0046	0.0218	0.0079
-.06	-.149	.0641	.0368	-.0057	.0244	.0076
2.00	-.057	.0620	.0266	-.0058	.0255	.0058
4.06	.032	.0613	.0197	-.0074	.0269	.0046
6.13	.133	.0661	.0065	-.0078	.0291	.0025
8.20	.234	.0728	-.0012	-.0089	.0310	-.0005
10.27	.326	.0907	-.0171	-.0091	.0300	-.0029
12.33	.421	.1130	-.0254	-.0060	.0311	-.0071
14.41	.535	.1471	-.0369	.0005	.0264	-.0109
16.49	.636	.1968	-.0497	.0049	.0223	-.0132
18.57	.750	.2542	-.0515	.0056	.0227	-.0153
20.63	.841	.3152	-.0610	.0072	.0178	-.0163
$h/c = 0.15$			$\eta_i = 0.20$		$\eta_o = 1.00$	
-2.13	-0.238	0.0671	0.0550	-0.0119	0.0229	0.0142
-.07	-.152	.0615	.0484	-.0137	.0267	.0139
2.00	-.064	.0598	.0410	-.0124	.0285	.0117
4.06	.026	.0612	.0297	-.0139	.0311	.0101
6.13	.127	.0654	.0176	-.0146	.0327	.0082
8.20	.226	.0734	.0044	-.0147	.0333	.0057
10.27	.330	.0866	-.0053	-.0144	.0325	.0025
12.34	.431	.1074	-.0147	-.0069	.0324	-.0030
14.41	.533	.1402	-.0232	-.0030	.0269	-.0060
16.49	.642	.1897	-.0339	-.0022	.0250	-.0074
18.57	.753	.2476	-.0402	.0019	.0195	-.0098
20.65	.872	.3169	-.0644	-.0018	.0177	-.0094

NACA

TABLE XI.- AERODYNAMIC CHARACTERISTICS OF MODEL 3 - Concluded

(e) $x_s/c = 0.70$; $h/c = 0.15$

α	C_L	C_D	C_m	C_Y	C_l	C_n
$h/c = 0.15$			$\eta_i = 0.40$		$\eta_o = 1.00$	
-2.09	-0.181	0.0436	0.0495	-0.0115	0.0168	0.0121
-.03	-.096	.0396	.0436	-.0125	.0203	.0122
2.04	-.007	.0394	.0353	-.0163	.0233	.0132
4.10	.084	.0413	.0270	-.0165	.0254	.0120
6.17	.186	.0466	.0161	-.0184	.0266	.0111
8.24	.290	.0550	.0060	-.0182	.0265	.0089
10.31	.388	.0697	-.0055	-.0170	.0266	.0062
12.39	.501	.0967	-.0181	-.0096	.0226	.0022
14.47	.608	.1364	-.0301	-.0086	.0201	.0012
16.58	.770	.1936	-.0573	-.0054	.0090	-.0013
18.65	.867	.2508	-.0662	-.0008	.0041	-.0013
20.71	.962	.3228	-.0820	-.0001	.0014	-.0010
$h/c = 0.15$			$\eta_i = 0.80$		$\eta_o = 1.00$	
-2.04	-0.109	0.0163	0.0296	-0.0007	0.0043	0.0017
.03	-.011	.0146	.0189	-.0012	.0054	.0020
2.10	.086	.0156	.0089	-.0015	.0062	.0019
4.17	.186	.0192	-.0016	-.0030	.0069	.0022
6.24	.281	.0259	-.0123	-.0029	.0065	.0017
8.32	.394	.0385	-.0273	-.0025	.0043	.0010
10.39	.503	.0583	-.0430	-.0017	.0014	.0003
12.46	.605	.0919	-.0505	-.0003	.0009	-.0005
14.54	.710	.1370	-.0570	.0008	.0032	-.0004
16.60	.793	.1908	-.0653	-.0018	.0031	.0002
18.66	.887	.2534	-.0683	-.0003	0	-.0005
20.72	.967	.3214	-.0792	-.0003	0	0
$h/c = 0.15$			$\eta_i = 0.40$		$\eta_o = 0.60$	
-2.08	-0.166	0.0317	0.0379	-0.0078	0.0108	0.0077
-.01	-.072	.0292	.0317	-.0095	.0119	.0079
2.05	.021	.0294	.0232	-.0116	.0136	.0081
4.12	.111	.0326	.0134	-.0113	.0115	.0072
6.19	.211	.0382	.0040	-.0142	.0168	.0078
8.26	.319	.0493	-.0078	-.0134	.0173	.0060
10.33	.410	.0663	-.0183	-.0134	.0180	.0048
12.41	.522	.0951	-.0302	-.0086	.0160	.0021
14.48	.624	.1362	-.0386	-.0064	.0140	.0013
16.57	.756	.1910	-.0587	-.0076	.0090	-.0008
18.65	.869	.2526	-.0678	-.0020	.0062	-.0028
20.70	.946	.3170	-.0794	-.0007	.0034	-.0014

α	C_L	C_D	C_m	C_Y	C_l	C_n
$h/c = 0.15$			$\eta_i = 0.60$		$\eta_o = 1.00$	
-2.06	-0.136	0.0266	0.0373	-0.0051	0.0098	0.0067
.01	-.045	.0239	.0324	-.0057	.0129	.0066
2.07	.047	.0242	.0244	-.0079	.0142	.0071
4.14	.147	.0272	.0145	-.0096	.0162	.0073
6.21	.246	.0334	.0014	-.0100	.0152	.0067
8.28	.345	.0437	-.0079	-.0103	.0158	.0055
10.35	.448	.0609	-.0182	-.0074	.0154	.0032
12.45	.584	.0932	-.0424	-.0040	.0063	.0013
14.53	.700	.1356	-.0550	0	.0019	-.0015
16.60	.797	.1896	-.0613	-.0019	.0010	-.0009
18.66	.874	.2516	-.0704	-.0003	.0027	-.0012
20.71	.963	.3208	-.0799	.0004	.0016	-.0015
$h/c = 0.15$			$\eta_i = 0.20$		$\eta_o = 0.40$	
-2.09	-0.184	0.0382	0.0318	-0.0058	0.0096	0.0059
-.02	-.090	.0360	.0251	-.0075	.0097	.0061
2.04	.006	.0365	.0153	-.0067	.0122	.0048
4.11	.100	.0391	.0037	-.0070	.0131	.0041
6.18	.198	.0455	-.0076	-.0080	.0139	.0032
8.25	.295	.0552	-.0188	-.0066	.0142	.0015
10.32	.395	.0724	-.0300	-.0047	.0145	-.0002
12.39	.496	.0995	-.0395	-.0043	.0142	-.0024
14.46	.598	.1384	-.0455	.0012	.0108	-.0049
16.53	.704	.1873	-.0514	.0018	.0096	-.0055
18.60	.796	.2475	-.0576	.0016	.0093	-.0054
20.66	.886	.3201	-.0697	.0001	.0117	-.0065
$h/c = 0.15$			$\eta_i = 0.40$		$\eta_o = 0.80$	
-2.09	-0.183	0.0407	0.0467	-0.0113	0.0152	0.0117
-.03	-.095	.0368	.0386	-.0134	.0178	.0122
2.04	-.003	.0369	.0309	-.0141	.0205	.0114
4.10	.092	.0390	.0215	-.0141	.0212	.0103
6.17	.190	.0438	.0104	-.0179	.0239	.0102
8.24	.292	.0536	.0014	-.0174	.0231	.0088
10.31	.390	.0696	-.0109	-.0167	.0244	.0067
12.38	.488	.0947	-.0227	-.0127	.0227	.0035
14.47	.614	.1371	-.0328	-.0094	.0197	.0008
16.58	.766	.1923	-.0598	-.0065	.0085	-.0008
18.65	.870	.2528	-.0684	-.0023	.0061	-.0013
20.70	.941	.3186	-.0825	.0004	.0028	-.0019

NACA

TABLE XII.- AERODYNAMIC CHARACTERISTICS OF MODEL 4

(a) $x_s/c = 0.70$; $h/c = 0$ and 0.10

α	C_L	C_D	C_m	C_Y	C_l	C_n
$h/c = 0$						
-2.01	-0.088	0.0317	0.0221	0.0037	-0.0009	-0.0007
.07	.055	.0290	.0056	.0038	-.0012	-.0009
2.16	.200	.0299	-.0078	.0038	-.0025	-.0010
4.25	.337	.0346	-.0175	.0036	-.0024	-.0011
6.33	.467	.0422	-.0382	.0043	-.0022	-.0010
8.41	.612	.0534	-.0525	.0038	-.0016	-.0007
10.50	.750	.0687	-.0707	.0049	-.0030	-.0011
12.58	.885	.0872	-.0795	.0038	-.0024	-.0012
14.65	.997	.1377	-.0827	-.0029	.0013	.0015
16.64	.973	.2311	-.0391	.0004	.0019	-.0008

α	C_L	C_D	C_m	C_Y	C_l	C_n
$h/c = 0.10$		$\eta_1 = 0.10$		$\eta_o = 0.20$		
-2.04	-0.135	0.0408	0.0087	0.0010	0.0038	0.0016
.04	.005	.0380	-.0116	.0011	.0037	.0012
2.13	.139	.0387	-.0258	.0019	.0040	.0008
4.21	.281	.0422	-.0433	.0023	.0033	.0006
6.29	.411	.0494	-.0588	.0026	.0039	.0002
8.38	.551	.0592	-.0763	.0041	.0027	-.0003
10.46	.694	.0734	-.0895	.0047	.0030	-.0006
12.54	.822	.0910	-.1024	.0059	.0022	-.0013
14.61	.934	.1214	-.0966	.0064	.0015	-.0010
15.62	.954	.1857	-.0811	.0056	.0004	-.0022
$h/c = 0.10$		$\eta_1 = 0.10$		$\eta_o = 0.60$		
-2.12	-0.263	0.0675	0.0293	-0.0021	0.0270	0.0068
-.04	-.131	.0623	.0107	-.0014	.0285	.0056
2.04	.003	.0606	.0011	-.0020	.0291	.0049
4.12	.137	.0623	-.0175	-.0028	.0288	.0037
6.20	.269	.0664	-.0279	-.0030	.0304	.0027
8.29	.415	.0741	-.0471	-.0037	.0298	.0019
10.38	.551	.0848	-.0641	-.0035	.0302	.0003
12.46	.689	.1008	-.0739	-.0043	.0303	-.0004
14.54	.818	.1214	-.0800	-.0054	.0296	-.0004
$h/c = 0.10$		$\eta_1 = 0.10$		$\eta_o = 1.00$		
-2.15	-0.305	0.0856	0.0645	-0.0050	0.0435	0.0134
-.07	-.180	.0807	.0492	-.0060	.0446	.0123
2.01	-.045	.0787	.0352	-.0078	.0459	.0112
4.09	.087	.0781	.0208	-.0090	.0468	.0100
6.18	.222	.0807	.0048	-.0113	.0490	.0083
8.26	.359	.0857	-.0089	-.0117	.0496	.0069
10.35	.501	.0946	-.0229	-.0133	.0495	.0055
12.44	.646	.1088	-.0410	-.0154	.0486	.0035
14.52	.789	.1268	-.0466	-.0163	.0443	.0021

α	C_L	C_D	C_m	C_Y	C_l	C_n
$h/c = 0.10$		$\eta_1 = 0.10$		$\eta_o = 0.40$		
-2.09	-0.218	0.0556	0.0048	-0.0020	0.0135	0.0040
-.01	-.075	.0518	-.0133	0	.0150	.0033
2.08	.058	.0505	-.0288	0	.0159	.0025
4.16	.189	.0531	-.0440	.0010	.0153	.0017
6.24	.329	.0584	-.0566	.0019	.0157	.0008
8.33	.472	.0669	-.0705	.0010	.0163	.0002
10.41	.603	.0796	-.0886	.0014	.0169	-.0006
12.49	.741	.0963	-.0989	.0007	.0178	-.0011
14.57	.861	.1197	-.1050	-.0013	.0185	-.0013
15.59	.897	.1814	-.0961	.0031	.0138	-.0033
$h/c = 0.10$		$\eta_1 = 0.10$		$\eta_o = 0.80$		
-2.14	-0.299	0.0775	0.0490	-0.0027	0.0388	0.0097
-.06	-.161	.0720	.0325	-.0027	.0406	.0088
2.02	-.031	.0691	.0169	-.0047	.0402	.0078
4.10	.102	.0695	.0046	-.0057	.0418	.0067
6.18	.236	.0733	-.0095	-.0067	.0410	.0055
8.27	.373	.0798	-.0251	-.0075	.0422	.0050
10.35	.508	.0896	-.0412	-.0087	.0424	.0026
12.44	.652	.1030	-.0568	-.0101	.0413	.0013
14.52	.783	.1220	-.0706	-.0108	.0382	.0005
$h/c = 0.10$		$\eta_1 = 0.20$		$\eta_o = 1.00$		
-2.12	-0.263	0.0801	0.0711	-0.0090	0.0393	0.0126
-.04	-.138	.0758	.0591	-.0109	.0414	.0121
2.03	-.009	.0730	.0467	-.0121	.0433	.0109
4.11	.126	.0740	.0373	-.0147	.0445	.0100
6.20	.257	.0770	.0291	-.0165	.0459	.0089
8.28	.390	.0827	.0126	-.0182	.0471	.0072
10.36	.530	.0923	-.0025	-.0200	.0474	.0059
12.45	.671	.1059	-.0197	-.0218	.0464	.0049
14.54	.810	.1250	-.0329	-.0118	.0395	.0038
16.60	.908	.1983	-.0421	.0150	.0073	-.0073

TABLE XII.- AERODYNAMIC CHARACTERISTICS OF MODEL 4 - Concluded

(b) $x_s/c = 0.70$; $h/c = 0.10$

α	C_L	C_D	C_m	C_Y	C_l	C_n
$h/c = 0.10$			$\eta_i = 0.40$		$\eta_o = 1.00$	
-2.08	-0.195	0.0662	0.0659	-0.0071	0.0257	0.0111
0	-.063	.0628	.0475	-.0086	.0283	.0107
2.09	.082	.0612	.0351	-.0103	.0299	.0101
4.17	.216	.0628	.0219	-.0117	.0308	.0095
6.25	.346	.0675	.0126	-.0137	.0317	.0087
8.34	.483	.0753	-.0013	-.0157	.0337	.0079
10.42	.629	.0869	-.0139	-.0167	.0337	.0071
12.50	.759	.1015	-.0345	-.0189	.0322	.0062
14.59	.903	.1298	-.0393	-.0119	.0267	.0023
15.62	.943	.1733	-.0478	-.0086	.0214	.0050
$h/c = 0.10$			$\eta_i = 0.80$		$\eta_o = 1.00$	
-2.02	-0.106	0.0422	0.0276	-0.0004	0.0041	0.0046
.06	.036	.0390	.0146	-.0010	.0038	.0042
2.15	.173	.0393	.0037	-.0020	.0055	.0039
4.23	.309	.0427	-.0018	-.0024	.0060	.0036
6.32	.452	.0493	-.0226	-.0032	.0064	.0035
8.40	.584	.0606	-.0422	-.0030	.0066	.0032
10.48	.720	.0746	-.0588	-.0054	.0064	.0033
12.57	.864	.0924	-.0668	-.0059	.0052	.0034
14.65	1.002	.1341	-.0883	.0059	-.0028	-.0013
15.66	1.016	.1802	-.0729	.0168	-.0112	-.0042

α	C_L	C_D	C_m	C_Y	C_l	C_n
$h/c = 0.10$			$\eta_i = 0.60$		$\eta_o = 1.00$	
-2.05	-0.142	0.0541	0.0443	-0.0040	0.0135	0.0087
.04	-.001	.0508	.0316	-.0058	.0153	.0085
2.12	.138	.0500	.0218	-.0058	.0160	.0078
4.21	.272	.0525	.0117	-.0070	.0177	.0074
6.29	.403	.0577	-.0016	-.0084	.0195	.0067
8.37	.544	.0677	-.0170	-.0090	.0192	.0064
10.46	.685	.0804	-.0317	-.0107	.0195	.0060
12.54	.825	.0969	-.0485	-.0112	.0185	.0053
14.64	.959	.1327	-.0629	-.0052	.0113	.0021
15.65	1.004	.1803	-.0622	.0138	-.0084	-.0038
$h/c = 0.10$			$\eta_i = 0.40$		$\eta_o = 0.80$	
-2.07	-0.183	0.0575	0.0525	-0.0045	0.0233	0.0074
.01	-.047	.0538	.0393	-.0052	.0244	.0070
2.09	.088	.0532	.0282	-.0070	.0256	.0067
4.18	.224	.0551	.0174	-.0087	.0280	.0062
6.26	.357	.0605	.0072	-.0098	.0285	.0056
8.34	.493	.0695	-.0083	-.0105	.0283	.0051
10.42	.628	.0820	-.0261	-.0139	.0302	.0045
12.51	.771	.0977	-.0401	-.0146	.0281	.0037
14.59	.903	.1224	-.0525	-.0098	.0243	.0021
16.63	.971	.2267	-.0525	.0021	.0019	-.0028

NACA

TABLE XIII.- AERODYNAMIC CHARACTERISTICS OF MODEL 4
WITH HORIZONTAL TAIL REMOVED
(a) $x_s/c = 0.70$; $h/c = 0$ and 0.05

α	C_L	C_D	C_m	C_Y	C_l	C_n
$h/c = 0$						
-2.01	-0.078	0.0315	0.0113	0.0024	-0.0004	-0.0005
.08	.060	.0285	.0126	.0024	-.0008	-.0005
2.15	.187	.0293	.0129	.0032	-.0017	-.0006
4.24	.320	.0334	.0134	.0025	-.0015	-.0007
6.32	.452	.0399	.0176	.0022	-.0009	-.0006
8.40	.584	.0495	.0177	.0043	-.0023	-.0006
10.48	.710	.0629	.0166	.0023	-.0016	-.0007
12.55	.827	.0804	.0192	.0032	-.0022	-.0004
14.62	.950	.1151	.0282	-.0092	-.0028	-.0031
16.62	.955	.2269	.0595	.0030	-.0042	-.0001

α	C_L	C_D	C_m	C_Y	C_l	C_n
$h/c = 0.05$		$\eta_i = 0.10$		$\eta_o = 0.20$		
-2.02	-0.090	0.0357	0.0029	0.0033	0.0010	-0.0003
.02	.027	.0336	0	.0028	.0007	-.0002
2.14	.164	.0338	.0090	.0020	.0013	-.0002
4.22	.291	.0374	.0059	.0028	.0005	-.0002
6.29	.416	.0436	.0077	.0024	.0020	-.0001
8.38	.554	.0529	.0114	.0037	.0003	-.0002
10.46	.690	.0659	.0099	.0038	.0005	-.0005
12.53	.805	.0817	.0115	.0044	.0003	-.0010
14.60	.921	.1025	.0175	.0020	.0029	-.0011
15.63	.962	.1536	.0197	.0019	.0003	-.0009
$h/c = 0.05$		$\eta_i = 0.10$		$\eta_o = 0.60$		
-2.07	-0.178	0.0492	0.0096	0.0027	0.0158	0.0024
.01	-.052	.0461	.0015	.0021	.0168	.0021
2.09	.076	.0450	.0179	.0013	.0170	.0019
4.17	.206	.0468	.0184	.0004	.0181	.0014
6.24	.331	.0511	.0213	.0007	.0180	.0012
8.32	.461	.0590	.0213	0	.0172	.0003
10.40	.595	.0697	.0191	-.0011	.0179	0
12.48	.726	.0838	.0164	-.0020	.0181	-.0003
14.56	.846	.1008	.0265	-.0030	.0174	-.0012
15.59	.901	.1398	.0253	.0109	.0095	-.0076
$h/c = 0.05$		$\eta_i = 0.10$		$\eta_o = 1.00$		
-2.08	-0.202	0.0584	0.0261	0.0020	0.0265	0.0060
-.01	-.083	.0541	.0273	.0013	.0283	.0055
2.07	.047	.0525	.0344	-.0013	.0290	.0048
4.14	.169	.0536	.0371	-.0026	.0298	.0043
6.22	.300	.0568	.0399	-.0048	.0307	.0037
8.30	.427	.0635	.0403	-.0051	.0296	.0028
10.38	.562	.0731	.0396	-.0079	.0310	.0020
12.40	.694	.0862	.0327	-.0085	.0286	.0012
14.55	.829	.1030	.0361	-.0088	.0261	.0008
15.58	.890	.1408	.0352	.0056	.0135	-.0040

α	C_L	C_D	C_m	C_Y	C_l	C_n
$h/c = 0.05$		$\eta_i = 0.10$		$\eta_o = 0.40$		
-2.05	-0.143	0.0429	0.0066	0.0025	0.0087	0.0013
.03	-.018	.0402	.0079	.0030	.0084	.0009
2.10	.100	.0401	.0080	.0022	.0078	.0005
4.19	.238	.0425	.0100	.0017	.0089	.0004
6.26	.360	.0476	.0125	.0018	.0100	.0002
8.34	.493	.0561	.0123	.0015	.0093	-.0002
10.42	.626	.0676	.0128	.0013	.0097	-.0005
12.51	.762	.0828	.0135	.0011	.0093	-.0007
14.58	.875	.1065	.0179	.0049	.0114	-.0037
15.60	.917	.1483	.0185	.0080	.0039	-.0034
$h/c = 0.05$		$\eta_i = 0.10$		$\eta_o = 0.80$		
-2.08	-0.198	0.0543	0.0236	0.0034	0.0246	0.0042
-.01	-.079	.0506	.0214	.0017	.0239	.0038
2.07	.053	.0489	.0245	.0003	.0261	.0035
4.15	.183	.0503	.0309	-.0017	.0235	.0027
6.22	.302	.0541	.0295	-.0025	.0264	.0022
8.31	.434	.0610	.0292	-.0030	.0269	.0015
10.39	.571	.0715	.0305	-.0035	.0258	.0009
12.47	.704	.0849	.0298	-.0052	.0254	.0004
14.55	.832	.1015	.0334	-.0043	.0229	-.0006
15.59	.903	.1287	.0273	-.0026	.0186	-.0015
$h/c = 0.05$		$\eta_i = 0.20$		$\eta_o = 1.00$		
-2.06	-0.167	0.0565	0.0269	-0.0015	0.0224	0.0060
.02	-.040	.0525	.0315	-.0030	.0236	.0059
2.09	.084	.0516	.0377	-.0077	.0248	.0053
4.17	.213	.0533	.0389	-.0059	.0254	.0048
6.24	.332	.0574	.0436	-.0076	.0266	.0042
8.32	.465	.0649	.0408	-.0086	.0266	.0033
10.41	.597	.0750	.0365	-.0099	.0271	.0028
12.49	.731	.0885	.0379	-.0105	.0248	.0020
14.57	.861	.1051	.0396	-.0109	.0228	.0016
16.60	.922	.2079	.0490	-.0036	.0089	-.0014

TABLE XIII.- AERODYNAMIC CHARACTERISTICS OF MODEL 4
WITH HORIZONTAL TAIL REMOVED - Concluded
(b) $x_s/c = 0.70$; $h/c = 0.05$ and 0.10

α	C_L	C_D	C_m	C_Y	C_l	C_n
$h/c = 0.05$			$\eta_1 = 0.40$		$\eta_o = 1.00$	
-2.04	-0.134	0.0487	0.0237	-0.0014	0.0148	0.0057
.03	-.010	.0458	.0289	-.0024	.0165	.0052
2.12	.126	.0452	.0316	-.0040	.0163	.0048
4.20	.257	.0476	.0381	-.0048	.0165	.0043
6.28	.385	.0528	.0391	-.0056	.0180	.0040
8.35	.511	.0608	.0353	-.0065	.0174	.0034
10.43	.640	.0718	.0382	-.0072	.0184	.0032
12.51	.771	.0861	.0384	-.0078	.0161	.0023
14.59	.904	.1043	.0446	-.0091	.0143	.0024
16.61	.933	.2128	.0447	-.0036	.0082	-.0020
$h/c = 0.10$			$\eta_1 = 0.10$		$\eta_o = 1.00$	
-2.15	-0.305	0.0856	0.0452	-0.0034	0.0430	0.0127
-.07	-.184	.0807	.0459	-.0048	.0439	.0118
2.01	-.057	.0776	.0503	-.0064	.0450	.0108
4.08	.072	.0771	.0533	-.0090	.0474	.0100
6.16	.192	.0792	.0574	-.0107	.0483	.0086
8.24	.329	.0821	.0567	-.0124	.0499	.0070
10.32	.461	.0904	.0547	-.0146	.0493	.0060
12.41	.598	.1022	.0500	-.0155	.0470	.0045
14.48	.720	.1164	.0468	-.0158	.0439	.0034
16.55	.837	.1842	.0578	.0115	.0166	-.0065

α	C_L	C_D	C_m	C_Y	C_l	C_n
$h/c = 0.10$			$\eta_1 = 0.10$		$\eta_o = 0.40$	
-2.09	-0.212	0.0551	0.0060	0.0024	0.0152	0.0029
-.01	-.088	.0514	.0039	.0029	.0151	.0022
2.06	.040	.0505	.0088	.0022	.0152	.0016
4.14	.171	.0525	.0112	.0027	.0156	.0010
6.23	.305	.0568	.0101	.0024	.0164	.0004
8.30	.433	.0644	.0101	.0017	.0177	.0002
10.39	.564	.0756	.0116	.0011	.0175	-.0006
12.47	.696	.0905	.0070	-.0003	.0184	-.0010
14.54	.809	.1085	.0136	-.0026	.0203	-.0014
16.59	.892	.1828	.0266	.0128	.0017	-.0055
$h/c = 0.10$			$\eta_1 = 0.40$		$\eta_o = 1.00$	
-2.07	-0.182	0.0666	0.0395	-0.0076	0.0261	0.0116
.01	-.056	.0625	.0436	-.0088	.0284	.0110
2.08	.071	.0608	.0483	-.0109	.0297	.0105
4.17	.205	.0623	.0533	-.0129	.0307	.0099
6.24	.332	.0656	.0548	-.0147	.0327	.0093
8.32	.454	.0728	.0550	-.0168	.0339	.0087
10.40	.591	.0821	.0552	-.0181	.0331	.0076
12.48	.723	.0952	.0535	-.0208	.0317	.0069
14.56	.852	.1119	.0551	-.0215	.0289	.0061
16.62	.948	.2068	.0491	-.0003	.0033	-.0026

NACA

[redacted]

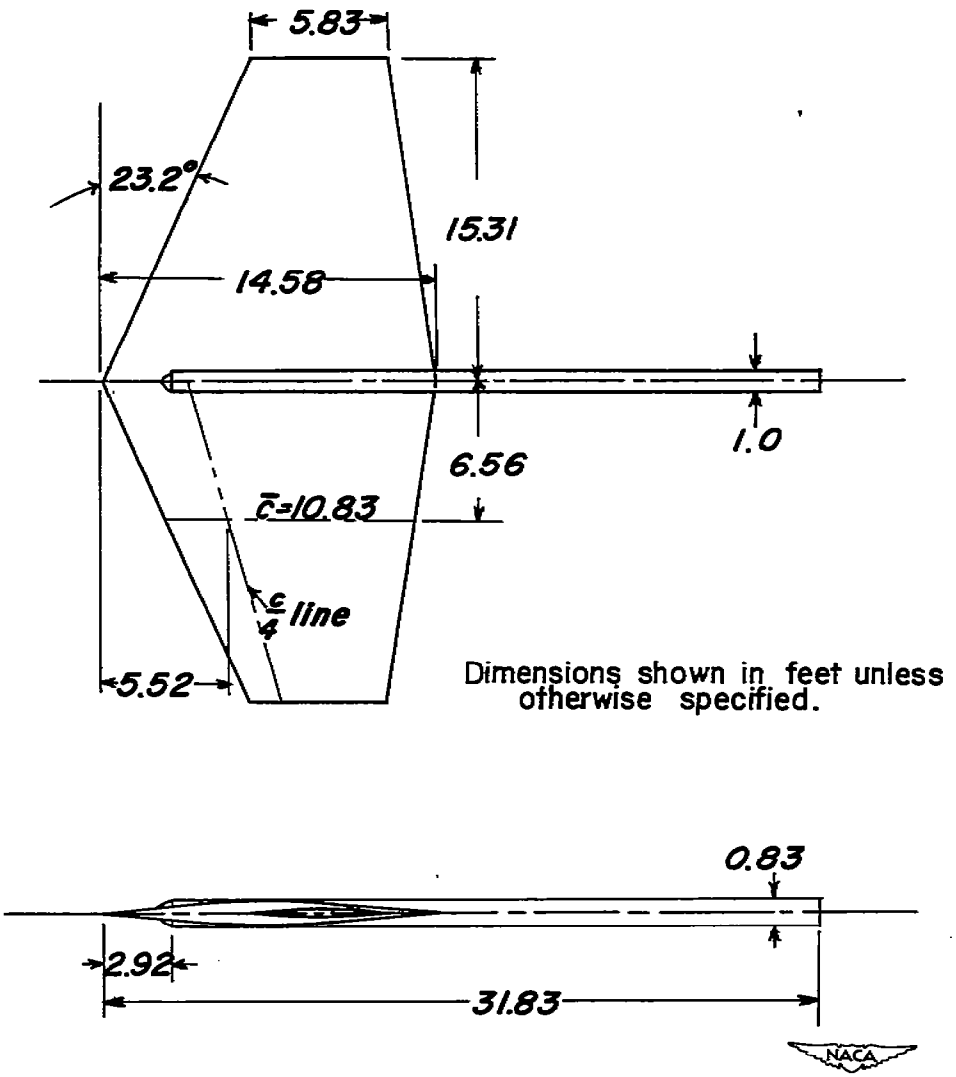

Figure 1.- Geometric details of model 1.

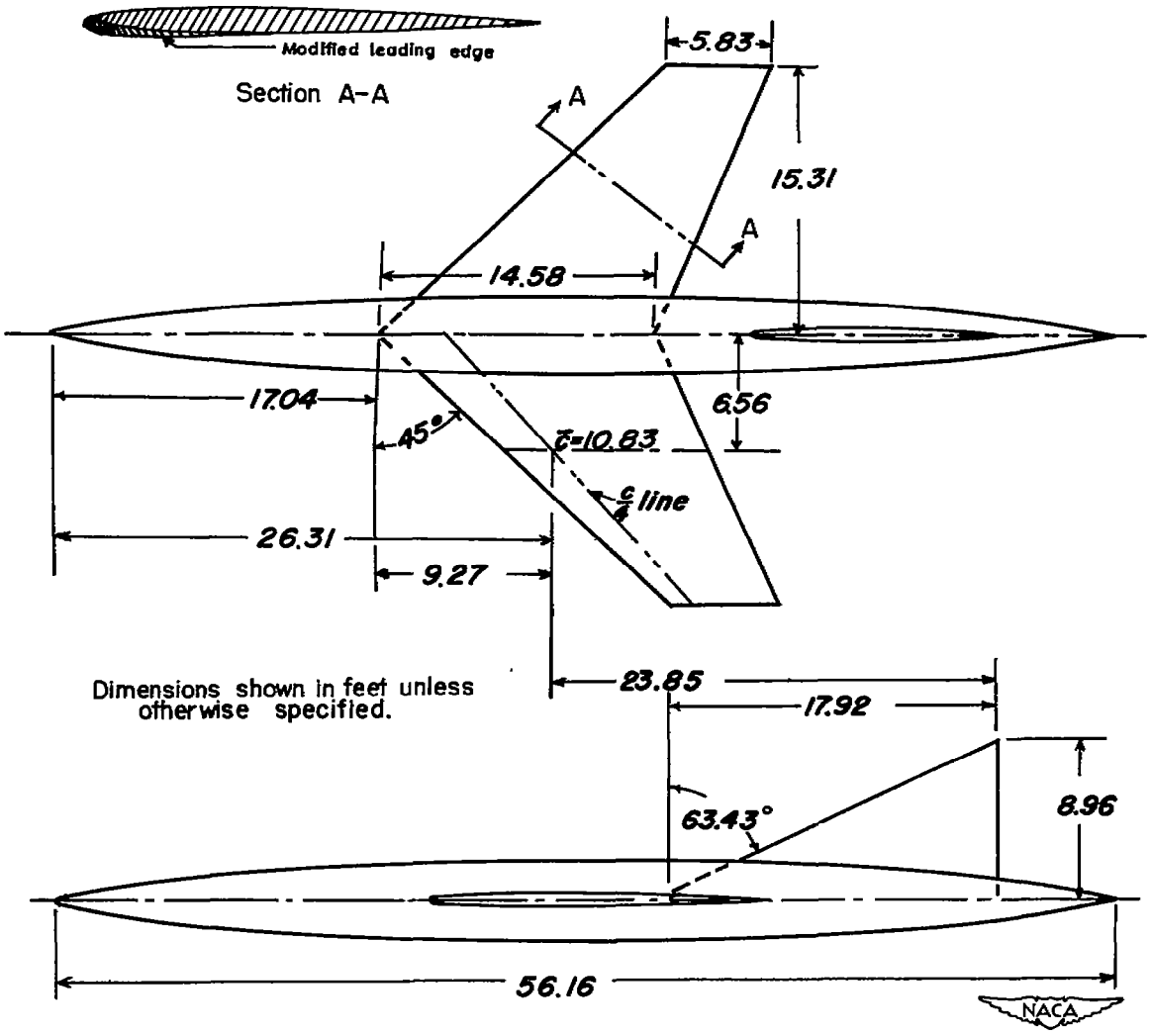

Figure 2.- Geometric details of model 2.

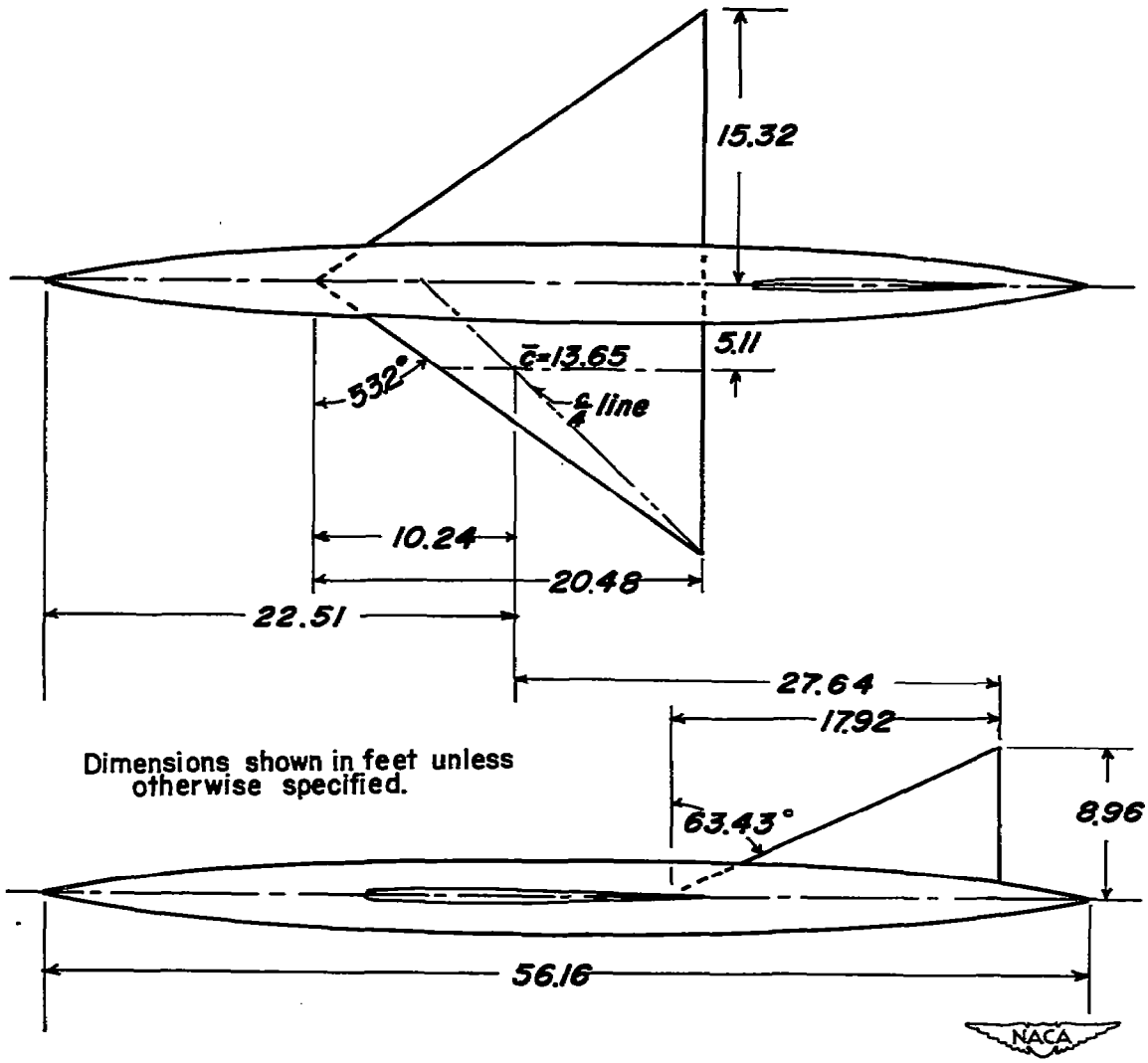

Figure 3.- Geometric details of model 3.

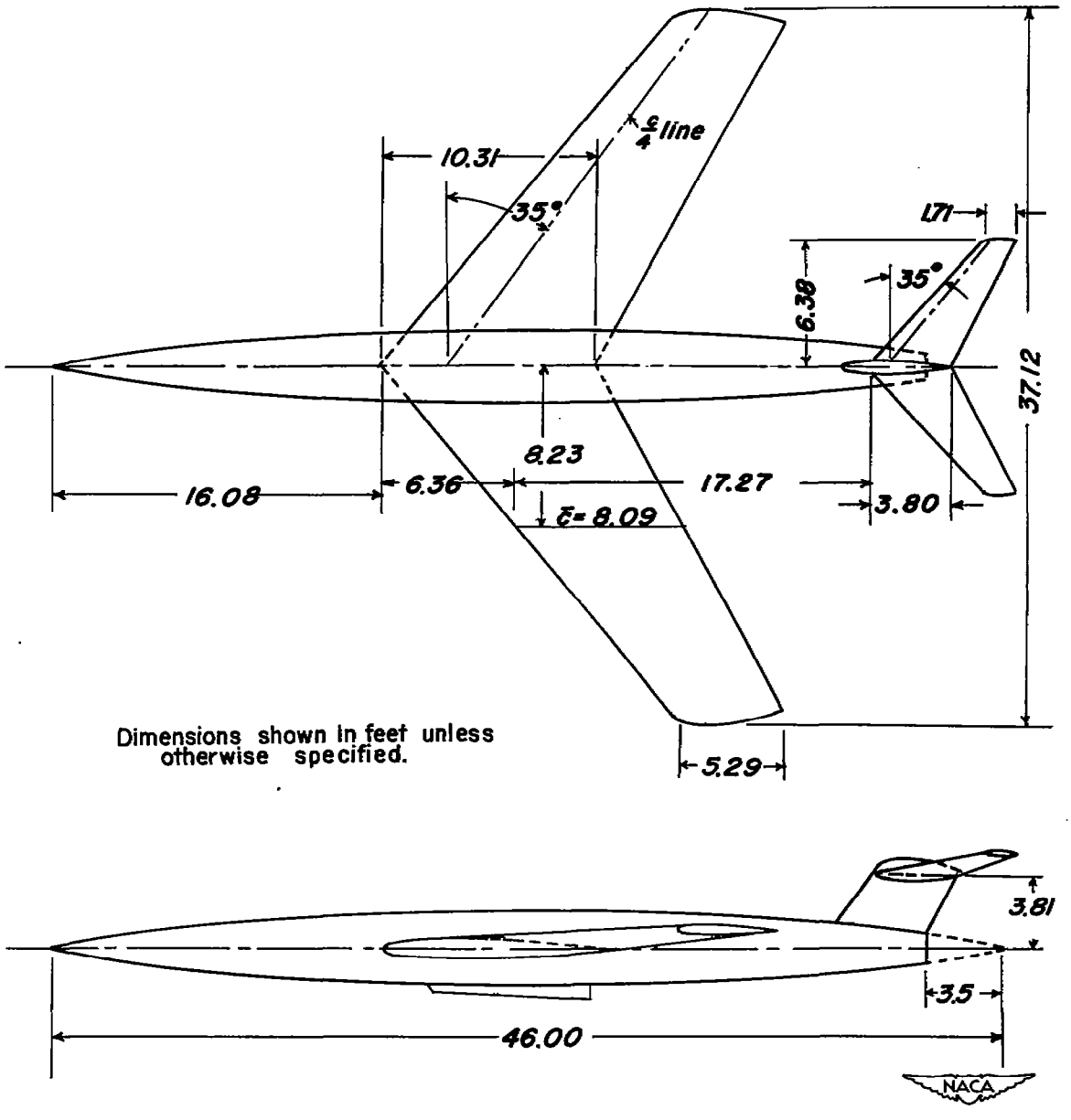

Figure 4.- Geometric details of model 4.

[redacted]

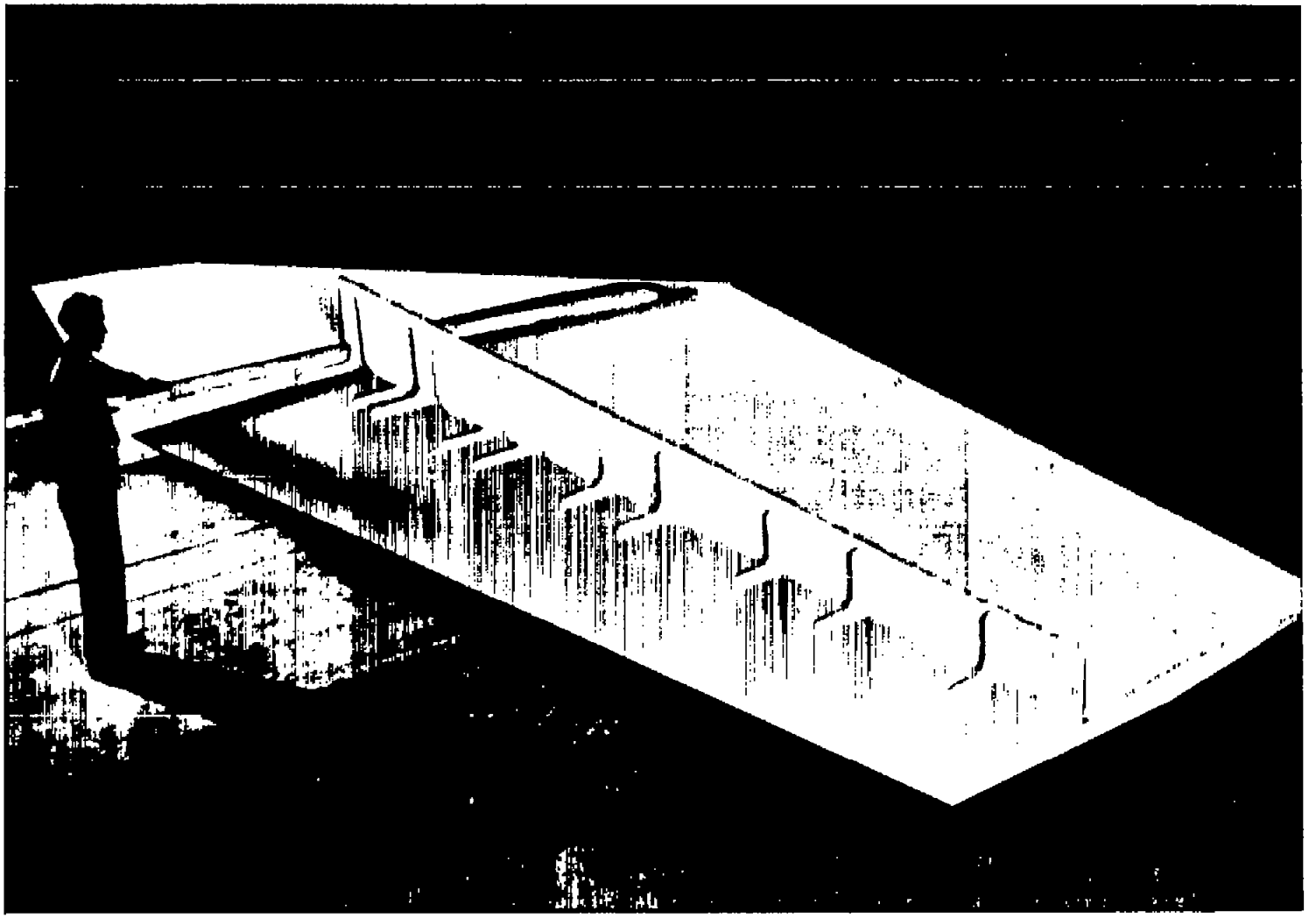

A-18523.1

Figure 5.- Typical spoiler installation.

[redacted]

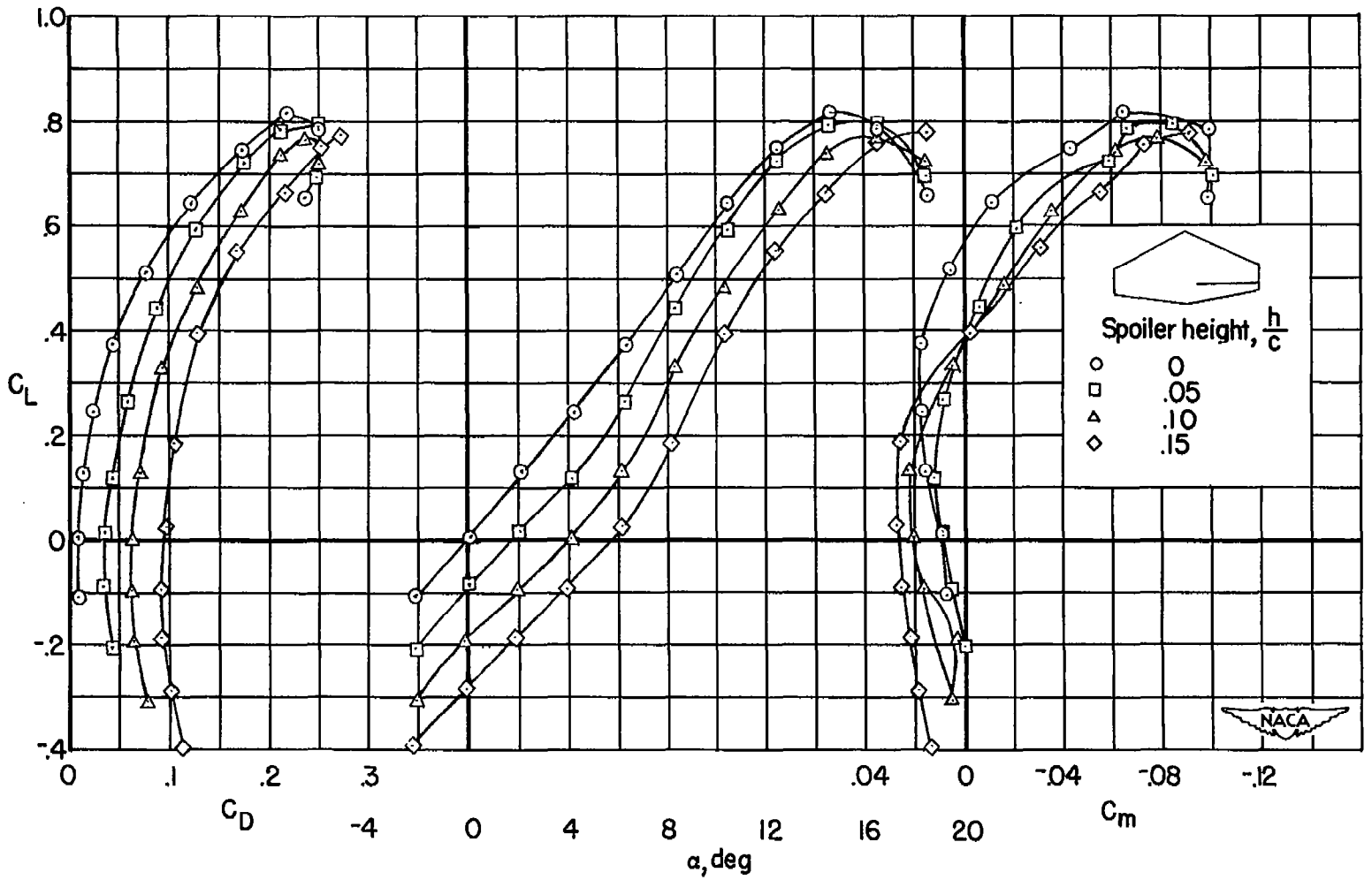

(a) C_L vs. C_D, α, C_m

Figure 6.- Aerodynamic characteristics of model 1; $\frac{x_s}{c}$ = 0.70; η_i = 0.15; η_o = 1.00.

[redacted]

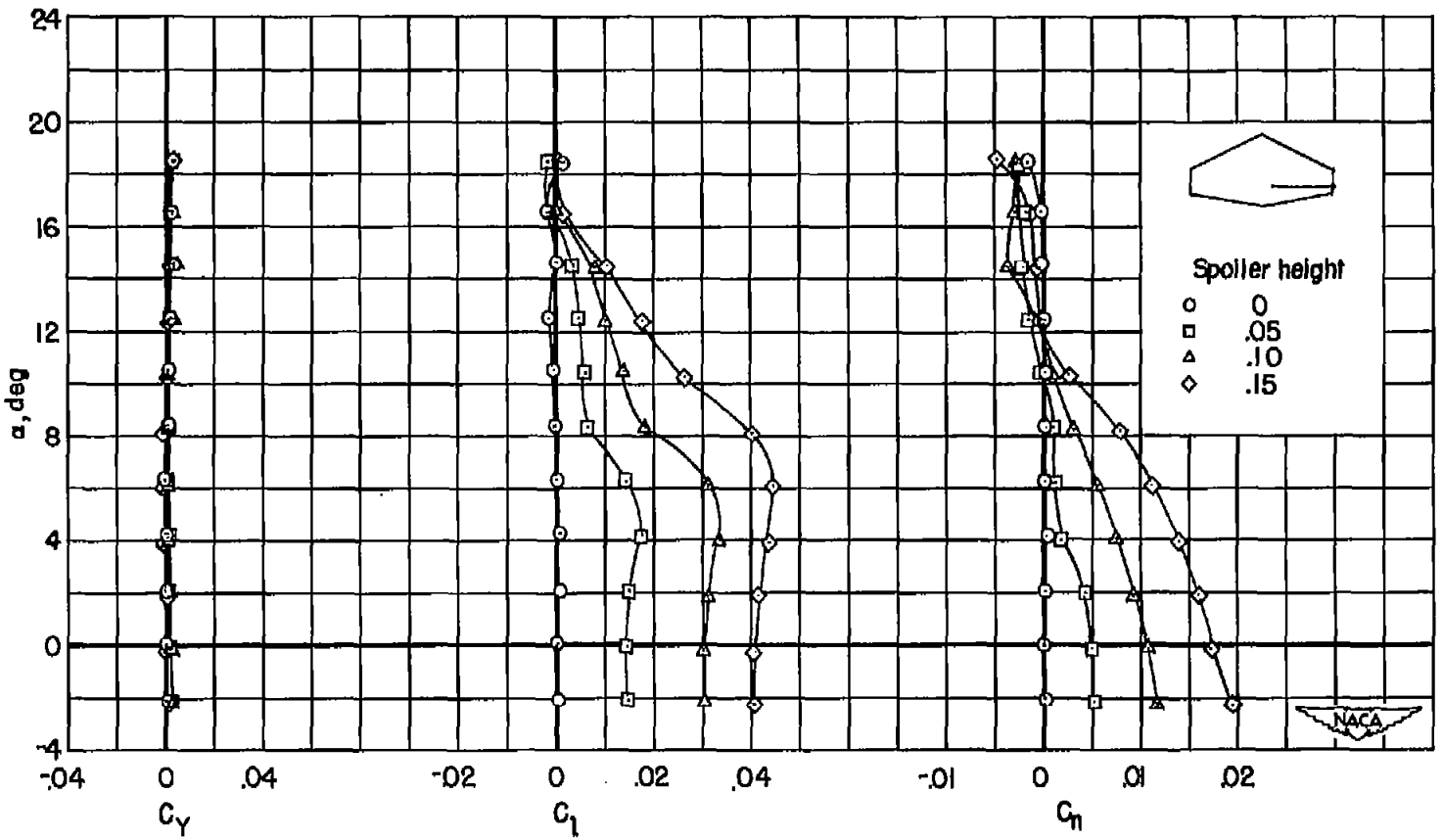

[redacted]

(b) α vs. C_Y, C_l, C_n

Figure 6.- Concluded.

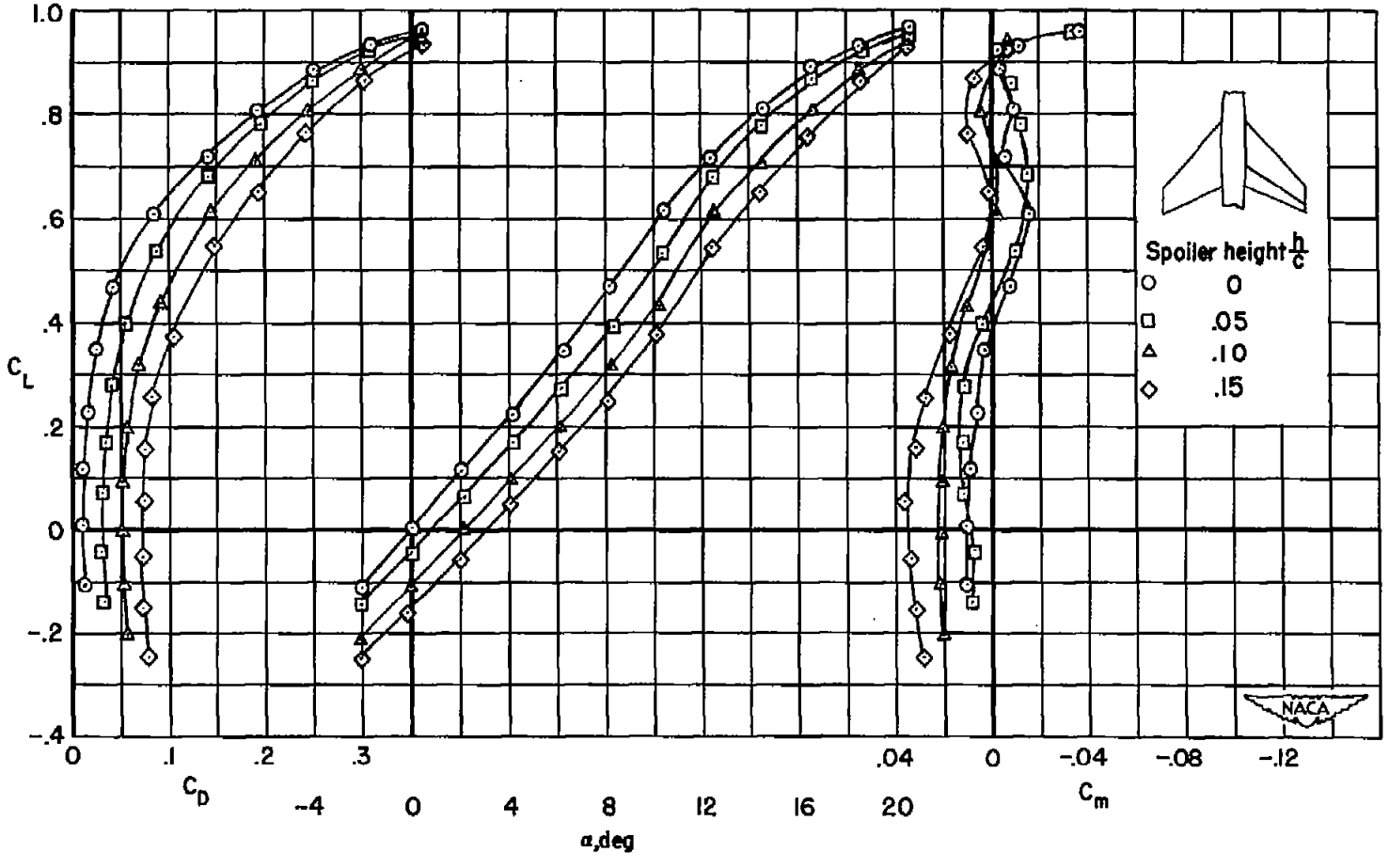

(a) C_L vs. C_D, α, C_m

Figure 7.- Aerodynamic characteristics of model 2 (unmodified); $\frac{x_s}{c} = 0.70$; $\eta_1 = 0.15$; $\eta_o = 1.00$.

[redacted]

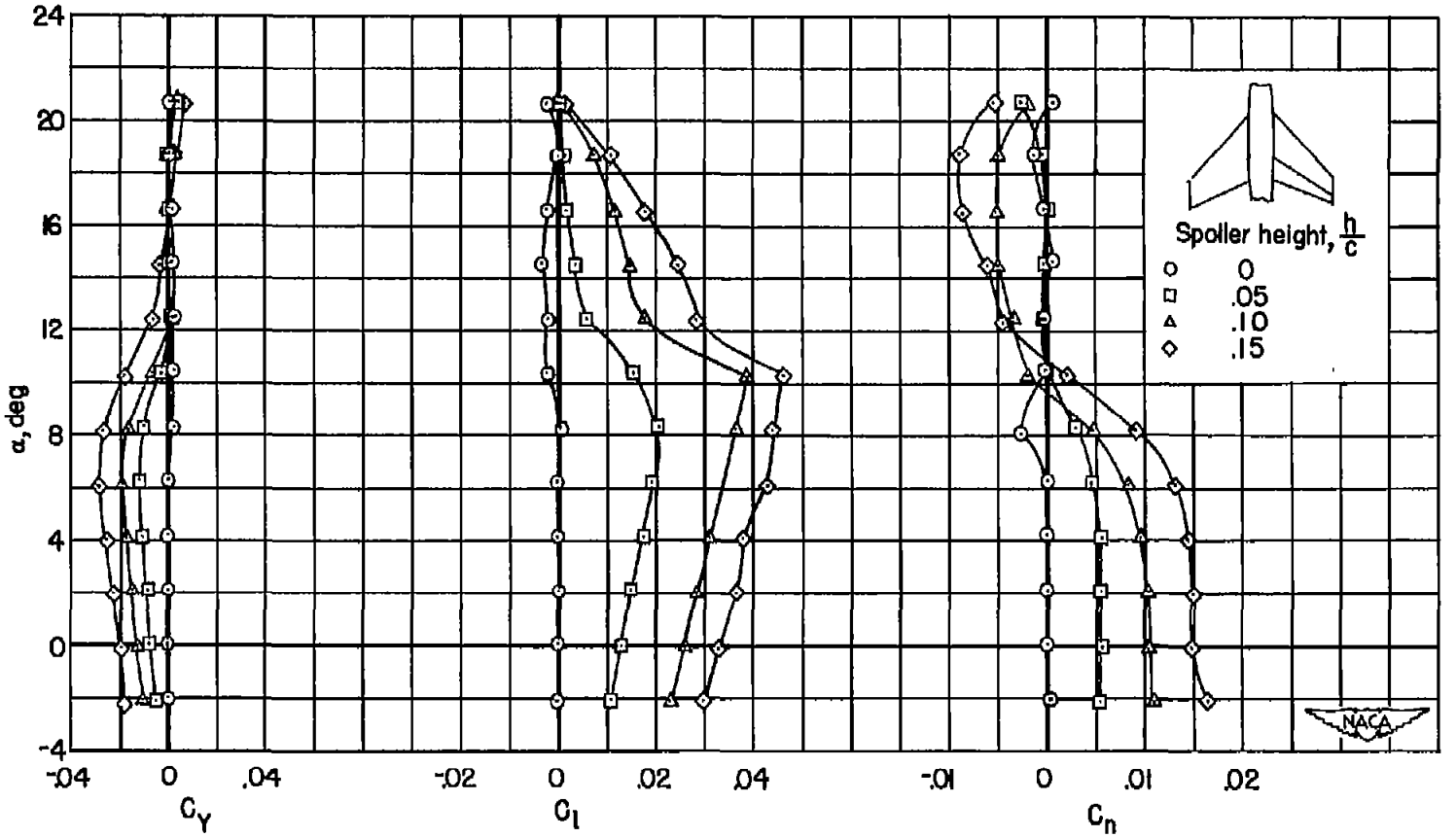

[redacted]

(b) α vs. C_Y, C_l, C_n

Figure 7.- Concluded.

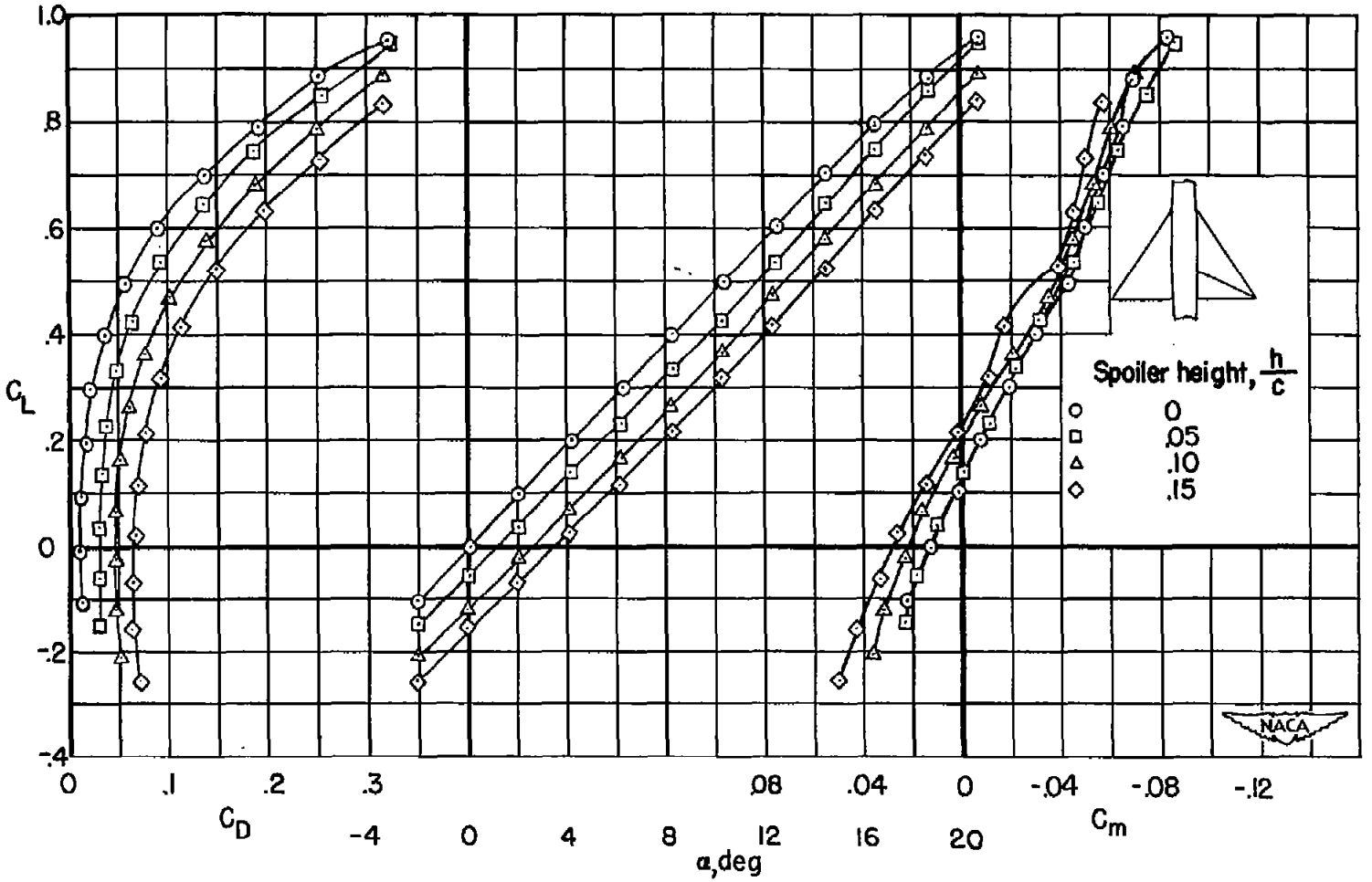

(a) C_L vs. C_D, α, C_m

Figure 8.- Aerodynamic characteristics of model 3; $\frac{x_s}{c} = 0.70$; $\eta_i = 0.15$; $\eta_o = 1.00$.

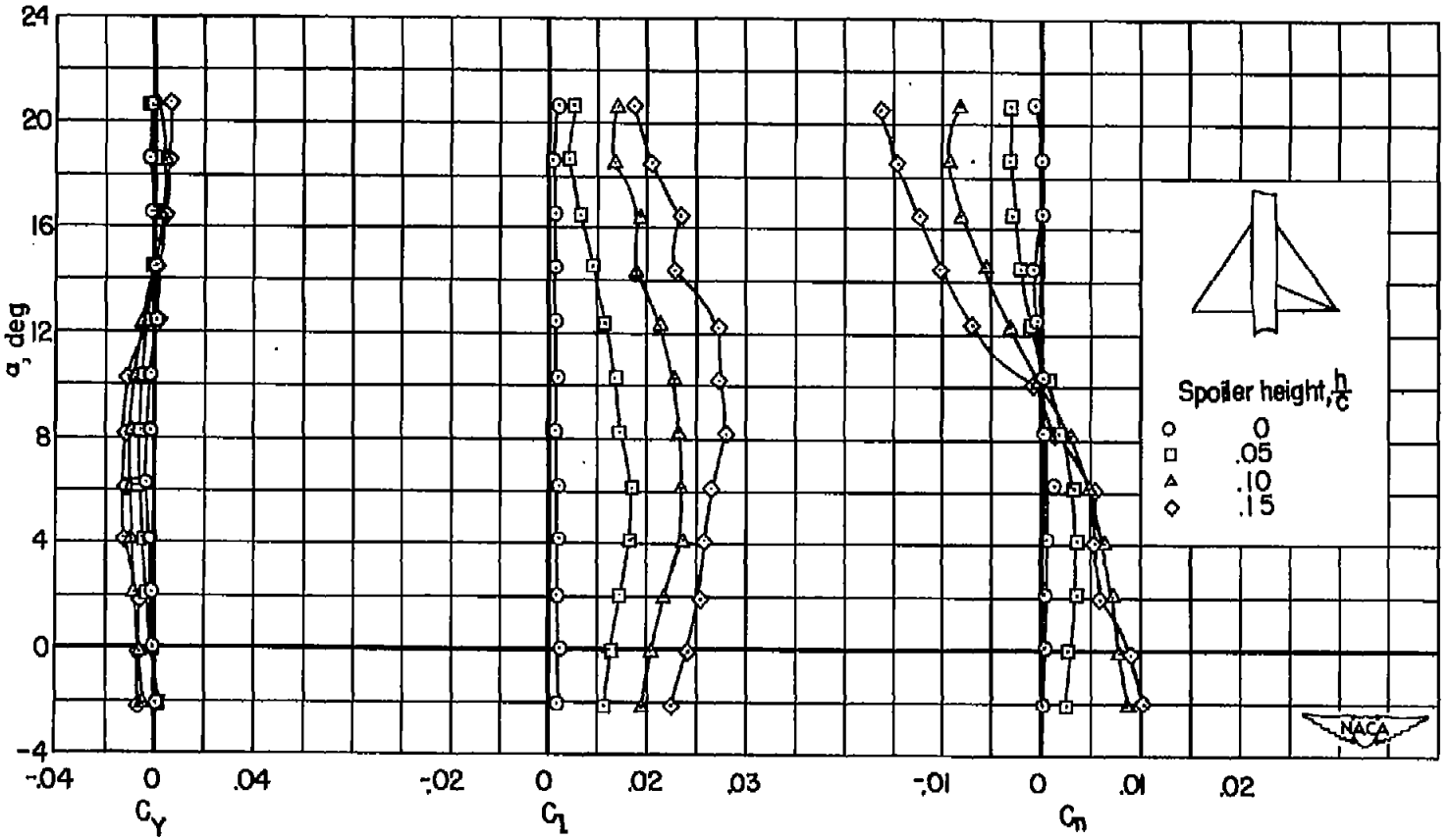

(b) α vs. C_Y, C_l, C_n

Figure 8.- Concluded.

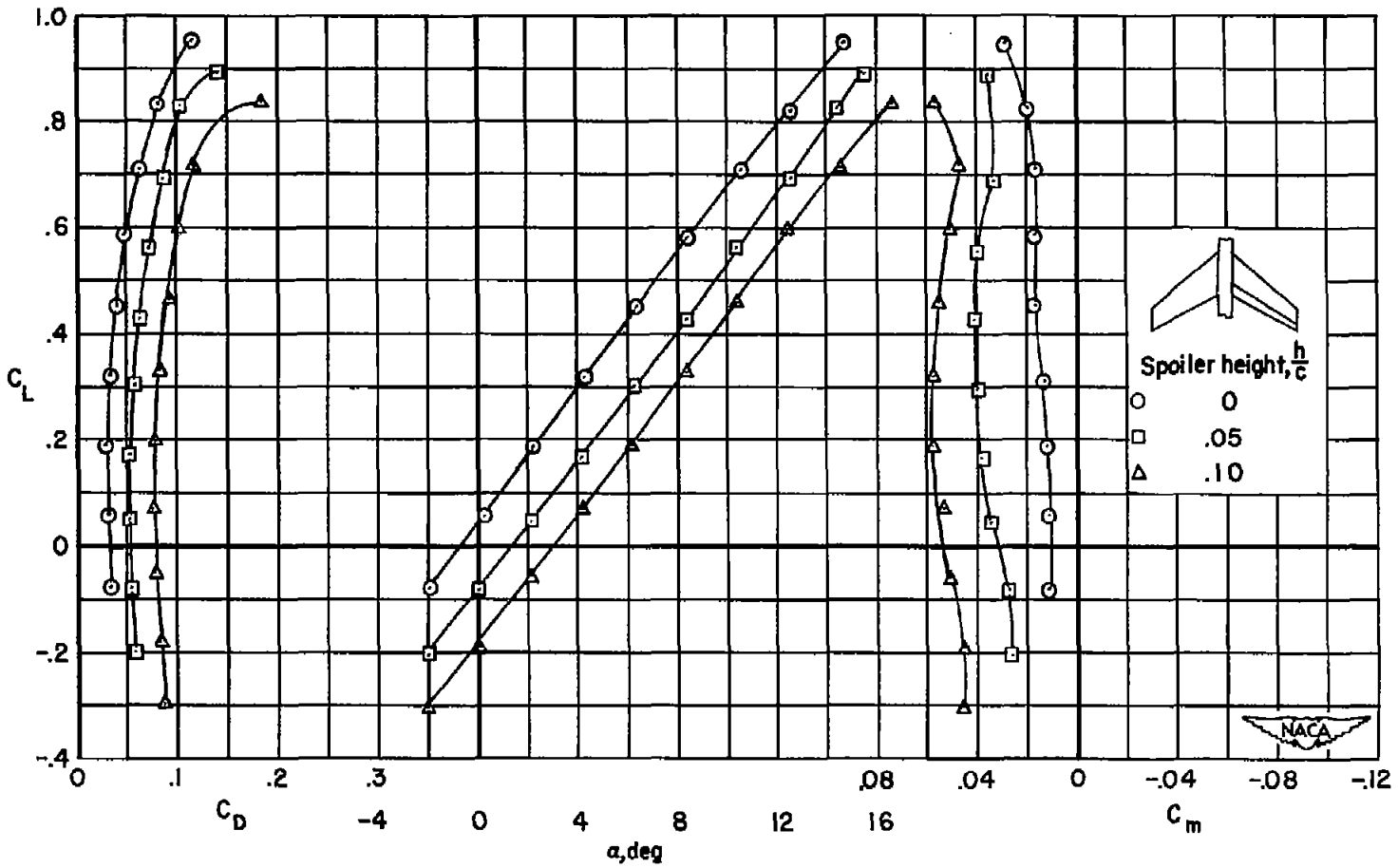

(a) C_L vs. C_D, α, C_m

Figure 9.- Aerodynamic characteristics of model 4 with horizontal tail removed; $\frac{x_s}{c} = 0.70$; $\eta_i = 0.10$; $\eta_o = 1.00$.

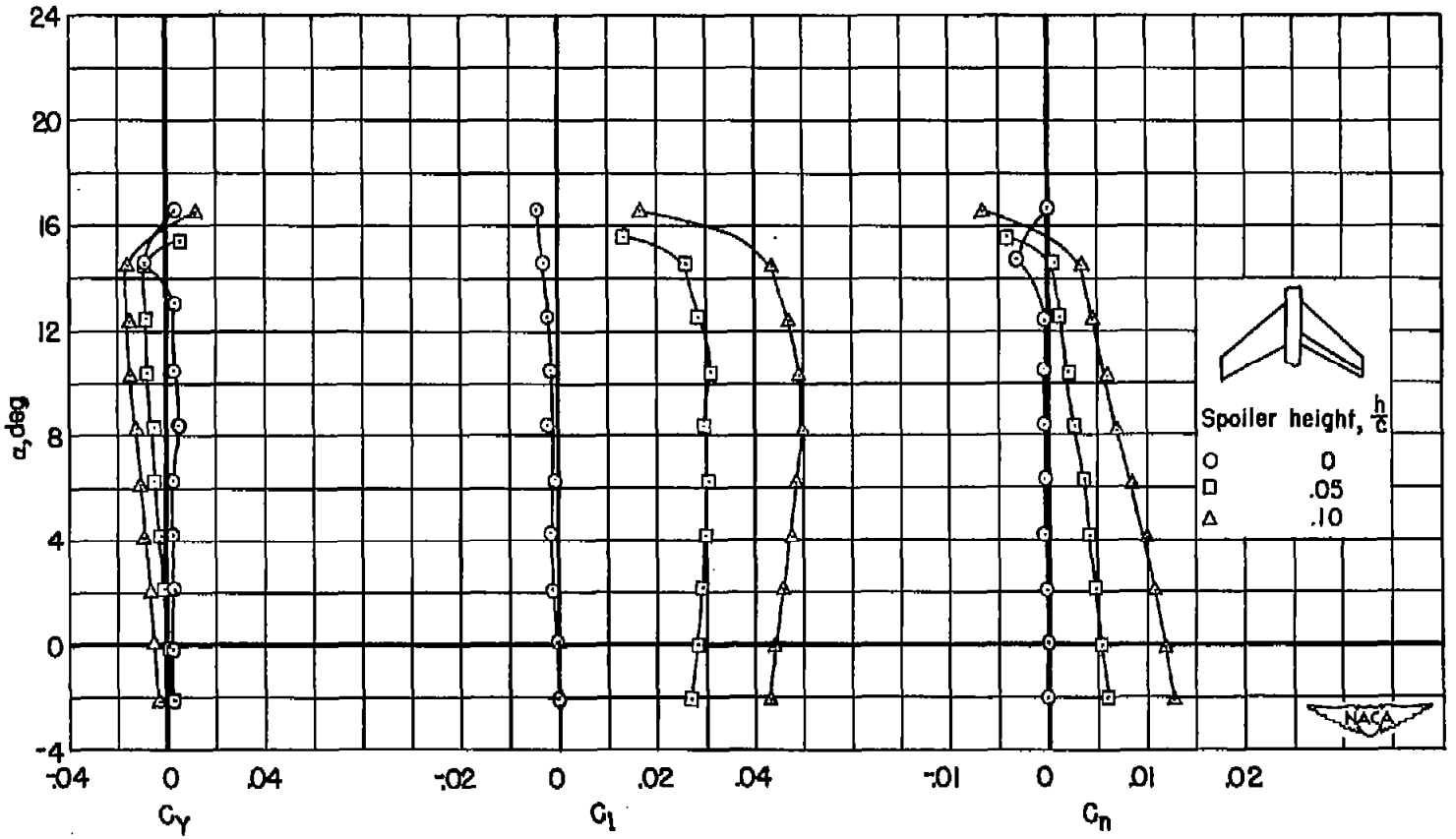

(b) α vs. C_Y, C_l, C_n

Figure 9.- Concluded.

NACA-Langley - 12-8-54 - 350

[redacted]

3 1176 01434 7737

[redacted]