SECRET
CONFIDENTIAL
6 NOV 1950.

Copy 5
RM L50H28

N-1072

NACA RM L50H28

3 1176 00090 4608

NACA

RESEARCH MEMORANDUM

TABULATED PRESSURE COEFFICIENTS AND AERODYNAMIC CHARACTERISTICS MEASURED ON THE WING OF THE BELL X-1 AIRPLANE IN PULL-UPS AT MACH NUMBERS FROM 0.53 TO 0.99

By Ronald J. Knapp and Gertrude V. Wilken

Langley Aeronautical Laboratory
Langley Air Force Base, Va.

CLASSIFICATION CHANGED TO
CONFIDENTIAL

Authority NACA Release Form #427 Date May 4, 1951
By E. Jean Burling See
May 10, 1951

CLASSIFICATION CANCELLED
Authority ... Date ...
By ... See ...

CLASSIFIED DOCUMENT
This document contains classified information affecting the National Defense of the United States within the meaning of the Espionage Act, USC 50:31 and 32. Its transmission or the revelation of its contents in any manner to an unauthorized person is prohibited by law.
Information so classified may be imparted only to persons in the military and naval services of the United States, appropriate civilian officers and employees of the Federal Government who have a legitimate interest therein, and to United States citizens of known loyalty and discretion who of necessity must be informed thereof.

NATIONAL ADVISORY COMMITTEE
FOR AERONAUTICS
WASHINGTON
November 1, 1950

SECRET
CONFIDENTIAL

NACA LIBRARY
LANGLEY AERONAUTICAL LABORATORY
Langley Field, Va.

NATIONAL ADVISORY COMMITTEE FOR AERONAUTICS

RESEARCH MEMORANDUM

TABULATED PRESSURE COEFFICIENTS AND AERODYNAMIC CHARACTERISTICS MEASURED ON THE WING OF THE BELL X-1 AIRPLANE IN PULL-UPS AT MACH NUMBERS FROM 0.53 TO 0.99

By Ronald J. Knapp and Gertrude V. Wilken

SUMMARY

Tabulated pressure coefficients and aerodynamic characteristics are presented for six spanwise stations on the left wing of the Bell X-1 research airplane. The data were obtained in 10 pull-ups at Mach numbers from 0.53 to 0.99.

INTRODUCTION

Flight tests are being conducted to determine the spanwise and chordwise loading on the wing of the Bell X-1 research airplane throughout the transonic and low-supersonic range. The purpose of the present paper is to present the data obtained in 10 pull-ups at Mach numbers from 0.53 to 0.99. Reference 1 presents similar data in a pull-up at an approximate Mach number of 0.96 and in a level run in a Mach number range from 0.79 to 1.00. Reference 2 presents analyzed data for station D (64.4 percent semispan) for the Mach number and normal-force-coefficient range of reference 1.

SYMBOLS

M	free-stream Mach number
n	normal load factor
W	airplane weight, pounds

S	wing area, including area projected through fuselage (130 sq ft)
S'	area of wing panels outboard of station A (99.4 sq ft)
C_{N_A}	airplane normal-force coefficient (nW/qS)
δ_{a_L}	left aileron angle, degrees
$b/2$	wing semispan (14 ft)
$b'/2$	spanwise distance from station A to wing tip (11.42 ft)
c	local wing chord parallel to plane of symmetry, feet
$\bar{c}$	average chord of wing panel, feet, (S'/b')
c'	mean aerodynamic chord of wing panel (M.A.C.), feet $\left(\frac{2}{S'}\int_0^{b'/2} c^2 dy\right)$
x	chordwise distance from leading edge of local chord, feet
y	spanwise distance outboard of airplane center line, feet
y'	spanwise distance outboard of station A, feet
q	free-stream dynamic pressure, pounds per square foot
p_o	free-stream static pressure, pounds per square foot
p	local static pressure, pounds per square foot
p_u	local static pressure on upper surface, pounds per square foot
p_l	local static pressure on lower surface, pounds per square foot
P	pressure coefficient $\left(\frac{p - p_o}{q}\right)$
P_R	resultant pressure coefficient $\left(\frac{p_l - p_u}{q}\right)$
c_n	section normal-force coefficient $\left(\int_0^1 P_R \, d\frac{x}{c}\right)$

$c_{m_{c/4}}$ section pitching-moment coefficient about 0.25-local-chord point $\left(\int_0^1 - P_R\left(\frac{x}{c} - 0.25\right) d\,\frac{x}{c}\right)$

c_m' section pitching-moment coefficient about a line perpendicular to longitudinal axis of airplane, passing through 0.25-chord point of mean aerodynamic chord of wing panel $\left(\int_0^1 - P_R\left(\frac{x}{c} - \frac{0.40c - 0.15c'}{c}\right) d\,\frac{x}{c}\right)$

C_N' wing panel normal-force coefficient $\left(\int_0^1 c_n \frac{c}{\bar{c}}\, d\,\frac{2y'}{b'}\right)$

C_{BM}' wing panel bending-moment coefficient about station A $\left(\int_0^1 c_n \frac{c}{\bar{c}} \frac{2y'}{b'}\, d\,\frac{2y'}{b'}\right)$

C_M' wing panel pitching-moment coefficient about 0.25 mean aerodynamic chord $\left(\frac{\bar{c}}{c'} \int_0^1 c_n' \left(\frac{c}{\bar{c}}\right)^2 d\,\frac{2y'}{b'}\right)$

c.p. center of pressure

DESCRIPTION OF AIRPLANE AND TEST PANEL

The Bell X-1 research airplane used in these tests is shown in figure 1. A three-view drawing of the airplane showing the general overall dimensions is given as figure 2. The spanwise and chordwise locations of the pressure-measuring orifices are shown in figure 3.

The airplane has a 10-percent-thick wing and incorporates an NACA 65-110 airfoil section with slight modifications. The ordinates of the airfoil section are given in table 1. Over the landing flap, the section is modified rearward of the 0.85-chord point to give a finite trailing-edge thickness; over the ailerons, the cusp is replaced by a straight taper from 0.85 chord to the trailing edge (reference 3). A line passing through the 0.40-chord point of the local chords is perpendicular to the longitudinal axis of the airplane. The wing has an incidence angle with respect to the fuselage axis of 2.5° at the root and 1.5° at the tip, an aspect ratio of 6, and a taper ratio of 0.5. The skin thickness is approximately 0.4 inch at the root and 0.15 inch at the tip. The wing

was painted and polished during the tests, but no refined filling or smoothing was attempted.

INSTRUMENTATION

Standard NACA recording instruments were used to obtain airspeed, pressure altitude, normal acceleration, and control positions. Wing-surface pressures were measured by two NACA recording multiple manometers. All records were synchronized by a common timer.

Free-stream static and dynamic pressures were recorded with an NACA high-speed pitot-static head located at the left wing tip. The static vents were located approximately 0.96 of the local chord ahead of the wing.

Wing-surface pressures were measured from flush-type orifices installed in the wing skin. The orifices were connected to the instrument compartment by $\frac{1}{8}$-inch inside-diameter aluminum tubing. Rubber tubing of $\frac{3}{16}$-inch inside diameter was used between the aluminum tubing and the manometer cells. The length of the aluminum tubing varied from about 2 feet at the root station to about 14 feet at the tip station. About 3 feet of rubber tubing were used on each line.

ACCURACY

The accuracy of the test results is estimated to be within the following limits:

Mach number	±0.01
P	±0.02
c_n	±0.05
$c_{m_{c/4}}$	±0.006

TESTS

The data presented herein were obtained during 10 pull-ups at Mach numbers of approximately 0.53, 0.62, 0.71, 0.80, 0.82, 0.85, 0.88, 0.89, 0.96, and 0.99. Rolling velocities were low despite a lateral oscillation encountered in the Mach number region of the tests. The ailerons were held close to neutral during the pull-ups.

METHODS

The wing is treated herein as an isolated panel and the coefficients obtained from the pressure distributions are based on the geometric properties of the wing panel outboard of station A (fig. 3(a)). Station A is approximately 3 inches outboard of the wing-fuselage junction and 31 inches outboard of the center line of the airplane.

The pressure differential was measured at stations A, B, C, E, and F (fig. 3(a)). At station D, the individual surface pressures were measured relative to the instrument compartment pressure. Static pressure at the pitot-static head was also measured relative to compartment pressure. The measured static pressure at the boom was corrected to free-stream static pressure by use of the radar-tracking method of reference 4.

Ground tests were made to determine any effects of lag that might be present in measuring the wing-surface pressures. These tests show that the effects of lag are negligible and have been neglected in these data.

Section coefficients were obtained by mechanical integration of the chordwise pressure distributions. Panel coefficients were obtained by spanwise integration of the section coefficients.

PRESENTATION OF RESULTS

Tables 2 to 11 present the measured pressure coefficients and aerodynamic characteristics obtained in the 10 pull-ups at approximate Mach numbers of 0.53, 0.62, 0.71, 0.80, 0.82, 0.85, 0.88, 0.89, 0.96, and 0.99, respectively. Pressure coefficients are not presented for all the orifices as some of the orifices were inoperative during the tests. Some of the manometer cells did not have an adequate range to measure all pressures encountered; thus, pressure coefficients are not presented for the times when these cells were off scale.

Langley Aeronautical Laboratory
National Advisory Committee for Aeronautics
Langley Air Force Base, Va.

REFERENCES

1. Carner, H. Arthur, and Payne, Mary M.: Tabulated Pressure Coefficients and Aerodynamic Characteristics Measured on the Wing of the Bell X-1 Airplane in Level Flight at Mach Numbers from 0.79 to 1.00 and in a Pull-Up at a Mach Number of 0.96. NACA RM L50H25, 1950.

2. Carner, H. Arthur, and Knapp, Ronald J.: Flight Measurements of the Pressure Distribution on the Wing of the X-1 Airplane (10-Percent-Thick Wing) over a Chordwise Station near the Midspan, in Level Flight at Mach Numbers from 0.79 to 1.00 and in a Pull-Up at a Mach Number of 0.96. NACA RM L50H04, 1950.

3. Ormsby, C. A.: Aerodynamic Design of the MX-653 Wing. Rep. No. 44-943-008. Bell Aircraft Corp., June 5, 1945.

4. Zalovcik, John A.: A Radar Method of Calibrating Airspeed Installations on Airplanes in Maneuvers at High Altitudes and at Transonic and Supersonic Speeds. NACA TN 1979, 1949.

TABLE 1

AIRFOIL ORDINATES OF THE X-1 WING

[Abscissa and ordinates in percent of local chord]

Abscissa	Ordinate			
	Flap stations		Aileron stations	
	Upper surface	Lower surface	Upper surface	Lower surface
0	0	0	0	0
.50	.796	-.746	.796	-.746
.75	.966	-.896	.966	-.896
1.25	1.222	-1.115	1.222	-1.115
2.50	1.667	-1.481	1.667	-1.481
5.00	2.334	-2.018	2.334	-2.018
7.50	2.859	-2.435	2.859	-2.435
10.00	3.298	-2.781	3.298	-2.781
15.00	4.002	-3.329	4.002	-3.329
20.00	4.541	-3.745	4.541	-3.745
25.00	4.951	-4.056	4.951	-4.056
30.00	5.246	-4.274	5.246	-4.274
35.00	5.439	-4.409	5.439	-4.409
40.00	5.532	-4.461	5.532	-4.461
45.00	5.511	-4.416	5.511	-4.416
50.00	5.364	-4.261	5.364	-4.261
55.00	5.078	-3.983	5.078	-3.983
60.00	4.682	-3.611	4.682	-3.611
65.00	4.197	-3.167	4.197	-3.167
70.00	3.642	-2.670	3.642	-2.670
75.00	3.032	-2.137	3.032	-2.137
80.00	2.385	-1.589	2.385	-1.589
85.00	1.721	-1.048	1.721	-1.048
90.00	1.100	-.687	1.148	-.698
95.00	.525	-.295	.574	-.349
100.00	0	0	0	0
L.E. radius = 0.687 percent chord				

NACA

TABLE 2

TABULATION OF PRESSURE COEFFICIENTS AND AERODYNAMIC CHARACTERISTICS

OF THE X-1 WING; PULL-UP AT $M \approx 0.53$

(a) $M = 0.529$; $C_{N_A} = 0.322$; $\delta_{a_L} = 0.50^\circ$ up

Orifice	Pressure coefficients						
	Station A*	Station B*	Station C*	Station D		Station E*	Station F*
				Upper	Lower		
1	-----	-----	-----	0.550	-----	-----	-----
2	2.243	1.859	2.085	-.954	0.722	1.816	1.251
3	1.546	1.467	-----	-.835	.499	1.257	.878
4	1.202	1.093	1.204	-.885	.322	.899	-----
5	-----	-----	-----	-----	-----	-----	.424
6	.552	.639	.618	-.572	-----	.467	-----
7	-----	-----	-----	-.548	-.108	.374	.159
8	-----	.350	-----	-.540	-----	.390	-----
9	.345	.300	-----	-.508	-.180	.297	-----
10	.308	.276	.326	-----	-.140	.300	-----
11	.223	.252	.297	-.437	-.169	.321	.141
12	.162	.223	.271	-.405	-.142	-----	.141
13	.106	.164	.164	-.246	-.124	.186	.103
14	.194	.133	-----	-.267	-----	.149	.050
15	.151	.088	.125	-.190	-.060	.149	.042
16	.034	.058	.106	-----	-.018	.090	.053
17	-----	-----	.077	-----	.019	-----	.019
18	-.034	-----	-----	.017	.014	.016	-----
19	.061	.050	-----	.078	-----	-----	.011
20	.016	-----	.050	.110	-----	-.024	-.048
21	-----	-----	-----	.123	-----	-----	-----

Integrated section aerodynamic characteristics						
c_n	0.352	0.358	0.399	0.376	0.318	0.164
$c_{m_{c/4}}$	0.010	0.004	-0.021	0.002	-0.001	0.006

Integrated panel aerodynamic characteristics	
$C_N' = 0.340$	
$C_{BM}' = 0.141$	Lateral c.p. (percent panel span) = 41.4
$C_M' = -0.000$	Chord c.p. (percent M.A.C.) = 25.0

*Resultant pressure coefficient.

NACA

TABLE 2

TABULATION OF PRESSURE COEFFICIENTS AND AERODYNAMIC CHARACTERISTICS

OF THE X-1 WING; PULL-UP AT $M \approx 0.53$ - Continued

(b) $M = 0.529$; $C_{N_A} = 0.418$; $\delta_{a_L} = 0.58^{\circ}$ up

Orifice	Pressure coefficients						
	Station A*	Station B*	Station C*	Station D		Station E*	Station F*
				Upper	Lower		
1	-----	-----	-----	0.245	-----	-----	-----
2	2.712	2.194	2.838	-1.188	0.828	2.358	1.591
3	1.910	1.851	-----	-1.108	.587	1.613	1.187
4	1.472	1.387	-----	-1.127	.406	1.194	-----
5	-----	-----	-----	-----	-----	-----	.565
6	.690	.785	.753	.652	-----	.618	-----
7	-----	-----	-----	-.604	-.047	.475	.186
8	-----	.438	-----	-.639	-----	.567	-----
9	.435	.355	-----	-.541	-.159	.385	-----
10	.371	.345	.398	-----	-.106	.353	-----
11	.281	.318	.350	-.472	-.140	.366	.170
12	.204	.281	.312	-.427	-.132	-----	.154
13	.159	.186	.212	-.267	-.100	.228	.117
14	.215	.164	-----	-.294	-----	.167	.069
15	.172	.119	.156	-.204	-.039	.162	.042
16	.066	.074	.122	-----	-.013	.109	.066
17	-----	-----	.106	-----	.024	-----	.027
18	-.034	-----	-----	.006	.019	.024	-----
19	.069	.058	-----	.059	-----	-----	.029
20	.024	-----	.050	.099	-----	-.024	-.042
21	-----	-----	-----	.120	-----	-----	-----

Integrated section aerodynamic characteristics						
c_n	0.440	0.439	0.520	0.462	0.401	0.217
$c_{m_{c/4}}$	0.012	0.006	0.009	0.002	0.002	0.009

Integrated panel aerodynamic characteristics	
$C_N' = 0.427$	
$C_{BM}' = 0.171$	Lateral c.p. (percent panel span) = 41.9
$C_M' = 0.007$	Chord c.p. (percent M.A.C.) = 23.3

*Resultant pressure coefficient.

TABLE 2

TABULATION OF PRESSURE COEFFICIENTS AND AERODYNAMIC CHARACTERISTICS

OF THE X-1 WING; PULL-UP AT $M \approx 0.53$ - Continued

(c) $M = 0.528$; $C_{N_A} = 0.555$; $\delta_{a_L} = 0.58^\circ$ up

Orifice	Pressure coefficients						
	Station A*	Station B*	Station C*	Station D		Station E*	Station F*
				Upper	Lower		
1	-----	-----	-----	-----	-----	-----	-----
2	3.388	3.421	3.157	-1.579	0.972	2.960	2.262
3	2.850	2.798	-----	-1.710	.759	2.146	1.605
4	2.423	1.867	-----	-1.454	.559	1.550	-----
5	-----	-----	-----	-----	-----	-----	.740
6	.855	.996	.956	-.770	-----	.818	-----
7	-----	-----	-----	-.724	.032	.631	.248
8	-----	.567	-----	-.660	-----	.591	-----
9	.517	.418	-----	-.599	-.107	.490	-----
10	.442	.426	.482	-----	-.045	.437	-----
11	.338	.391	.431	-.493	-.093	.437	.210
12	.266	.349	.378	-.447	-.101	-----	.200
13	.186	.245	.264	-.285	-.061	.269	.168
14	.248	.213	-----	-.296	-----	.218	.093
15	.181	.141	.184	-.221	-.016	.189	.067
16	.088	.096	.141	-----	.005	.144	.096
17	-----	-----	.128	-----	.037	-----	.048
18	-.027	-----	-----	-.011	.019	.048	-----
19	.083	.059	-----	.045	-----	-----	.064
20	.035	-----	.061	.088	-----	-.024	-.021
21	-----	-----	-----	.115	-----	-----	-----

Integrated section aerodynamic characteristics						
c_n	0.582	0.578	0.642	0.576	0.517	0.303
$c_{m_{c/4}}$	0.022	0.014	0.010	0.002	0.002	0.010

Integrated panel aerodynamic characteristics	
$C_N' = 0.545$	
$C_{BM}' = 0.228$	Lateral c.p. (percent panel span) = 41.8
$C_M' = 0.010$	Chord c.p. (percent M.A.C.) = 23.3

*Resultant pressure coefficient.

TABLE 2

TABULATION OF PRESSURE COEFFICIENTS AND AERODYNAMIC CHARACTERISTICS

OF THE X-1 WING; PULL-UP AT $M \approx 0.53$ - Continued

(d) $M = 0.530$; $C_{N_A} = 0.580$; $\delta_{a_L} = 0.58^\circ$ up

Orifice	Pressure coefficients						
	Station A*	Station B*	Station C*	Station D		Station E*	Station F*
				Upper	Lower		
1	-----	-----	-----	-----	-----	-----	-----
2	3.072	3.902	3.188	-1.677	1.000	3.358	2.452
3	2.821	3.358	-----	-1.869	.806	2.549	1.804
4	2.621	2.371	-----	-1.669	.593	1.796	-----
5	-----	-----	-----	-----	-----	-----	.828
6	.889	1.038	1.035	-.799	-----	.910	-----
7	-----	-----	-----	-.695	.058	.668	.247
8	-----	.604	-----	-.658	-----	.636	-----
9	.530	.439	-----	-.602	-.070	.506	-----
10	.452	.463	.522	-----	-.027	.490	-----
11	.346	.399	.447	-.490	-.078	.458	.245
12	.268	.359	.386	-.440	-.076	-----	.213
13	.202	.255	.290	-.285	-.040	.293	.176
14	.255	.213	-----	-.309	-----	.224	.109
15	.181	.152	.184	-.213	-.019	.202	.075
16	.106	.112	.141	-----	.013	.144	.101
17	-----	-----	.136	-----	.045	-----	.061
18	-.027	-----	-----	-.009	.026	.056	-----
19	.083	.072	-----	.047	-----	-----	.080
20	.035	-----	.067	.087	-----	-.024	-.016
21	-----	-----	-----	.122	-----	-----	-----

Integrated section aerodynamic characteristics						
c_n	0.605	0.647	0.679	0.621	0.569	0.330
$c_{m_{c/4}}$	0.024	0.020	0.010	0.005	0.006	0.007

Integrated panel aerodynamic characteristics	
$C_N' = 0.589$	
$C_{BM}' = 0.291$	Lateral c.p. (percent panel span) = 41.4
$C_M' = 0.014$	Chord c.p. (percent M.A.C.) = 22.6

*Resultant pressure coefficient.

TABLE 2

TABULATION OF PRESSURE COEFFICIENTS AND AERODYNAMIC CHARACTERISTICS

OF THE X-1 WING; PULL-UP AT $M \approx 0.53$ - Continued

(e) $M = 0.533$; $C_{N_A} = 0.721$; $\delta_{a_L} = 0.58^{\circ}$ up

Orifice	Pressure coefficients						
	Station A*	Station B*	Station C*	Station D		Station E*	Station F*
				Upper	Lower		
1	-----	-----	-----	-----	-----	-----	-----
2	2.536	3.361	2.990	-----	1.046	3.632	3.768
3	2.421	3.154	-----	-2.191	.858	3.093	2.326
4	2.266	2.944	-----	-2.156	.698	2.465	-----
5	-----	-----	-----	-----	-----	-----	1.068
6	1.489	1.314	1.259	-.948	-----	1.089	-----
7	-----	-----	-----	-.731	.128	.775	.325
8	-----	.701	-----	-.636	-----	.725	-----
9	.571	.476	-----	-.587	-.014	.594	-----
10	.445	.432	.513	-----	.047	.508	-----
11	.325	.385	.424	-.432	-.014	.466	.304
12	.238	.288	.379	-.375	-.048	-----	.285
13	.209	.272	.264	-.275	-.014	.296	.228
14	.207	.209	-----	-.288	-----	.236	.157
15	.194	.196	.199	-.205	.002	.215	.147
16	.131	.154	.175	-----	.026	.165	.167
17	-----	-----	.167	-----	.044	-----	.118
18	-.026	-----	-----	-.027	.002	.086	-----
19	.126	.144	-----	.033	-----	-----	.131
20	.050	-----	.102	.023	-----	-----	.016
21	-----	-----	-----	.054	-----	-----	-----

Integrated section aerodynamic characteristics						
c_n	0.681	0.756	0.723	0.745	0.686	0.441
$c_{m_{c/4}}$	0.021	0.021	0.006	0.019	0.013	0.006

Integrated panel aerodynamic characteristics	
$C_N' = 0.685$	
$C_{BM}' = 0.291$	Lateral c.p. (percent panel span) = 42.4
$C_M' = 0.016$	Chord c.p. (percent M.A.C.) = 22.7

*Resultant pressure coefficient.

TABLE 2

TABULATION OF PRESSURE COEFFICIENTS AND AERODYNAMIC CHARACTERISTICS

OF THE X-1 WING; PULL-UP AT $M \approx 0.53$ - Concluded

(f) $M = 0.533$; $C_{N_A} = 0.796$; $\delta_{a_L} = 0.58^\circ$ up

Orifice	Pressure coefficients						
	Station A*	Station B*	Station C*	Station D		Station E*	Station F*
				Upper	Lower		
1	-----	-----	-----	-----	-----	-----	-----
2	2.081	2.401	2.938	-1.200	1.059	3.705	3.700
3	1.994	2.370	-----	-1.148	.941	2.623	2.868
4	1.908	2.118	-----	-1.842	.744	2.183	-----
5	-----	-----	-----	-----	-----	-----	1.271
6	1.295	1.431	1.355	-1.295	-----	1.504	-----
7	-----	-----	-----	-.909	.173	1.064	.377
8	-----	.731	-----	-.820	-----	.925	-----
9	.791	.532	-----	-.687	.045	.744	-----
10	.548	.495	.482	-----	.047	.540	-----
11	.469	.438	.419	-.514	-.005	.466	.343
12	.401	.320	.401	-.435	-.003	-----	.330
13	.278	.314	.320	-.364	-.021	.312	.275
14	.273	.262	-----	-.362	-----	.270	.212
15	.249	.249	.301	-.273	-.031	.244	.197
16	.223	.199	.309	-----	.005	.212	.236
17	-----	-----	.246	-----	-.013	-----	.168
18	-.026	-----	-----	-.202	-.060	.149	-----
19	.189	.249	-----	.178	-----	-----	.170
20	.105	-----	.193	-.162	-----	.039	.034
21	-----	-----	-----	-.073	-----	-----	-----

Integrated section aerodynamic characteristics						
c_n	0.677	0.725	0.761	0.842	0.773	0.517
$c_{m_{c/4}}$	-0.008	0.013	-0.014	0.011	0.002	0.003

Integrated panel aerodynamic characteristics	
$C_N' = 0.724$	
$C_{BM}' = 0.321$	Lateral c.p. (percent panel span) = 44.4
$C_M' = 0.006$	Chord c.p. (percent M.A.C.) = 25.9

*Resultant pressure coefficient.

TABLE 3

TABULATION OF PRESSURE COEFFICIENTS AND AERODYNAMIC CHARACTERISTICS

OF THE X-1 WING; PULL-UP AT $M \approx 0.62$

(a) $M = 0.613$; $C_{N_A} = 0.395$; $\delta_{a_L} = 0.30^\circ$ up

Orifice	Pressure coefficients						
	Station A*	Station B*	Station C*	Station D		Station E*	Station F*
				Upper	Lower		
1	-----	-----	-----	0.544	-----	-----	-----
2	2.864	2.477	2.495	-1.359	0.760	2.241	1.448
3	2.232	1.644	-----	-.984	.577	1.620	1.070
4	1.354	1.395	1.434	-1.120	.320	1.126	-----
5	-----	-----	-----	-----	-----	-----	.529
6	.653	.754	.724	-.673	-----	.615	-----
7	-----	-----	-----	-.629	-.103	.449	.236
8	-----	.432	-----	-.608	-----	.467	-----
9	.417	.364	-----	-.591	-.189	.358	-----
10	.372	.334	.399	-----	-.150	.343	-----
11	.266	.310	.331	-.499	-.192	.369	.163
12	.210	.278	.281	-.446	-.153	-----	.163
13	.142	.183	.210	-.298	-.132	.216	.115
14	.195	.136	-----	-.307	-----	.166	.071
15	.151	.103	.124	-.218	-.061	.154	.047
16	.050	.065	.103	-----	-.041	.101	.068
17	-----	-----	.092	-----	.015	-----	.035
18	.021	-----	-----	.004	.021	.062	-----
19	.062	.035	-----	.066	-----	-----	.050
20	.018	-----	.047	.110	-----	-.021	-.041
21	-----	-----	-----	.134	-----	-----	-----

Integrated section aerodynamic characteristics						
c_n	0.421	0.435	0.461	0.445	0.399	0.224
$c_{m_{c/4}}$	0.010	0.010	0.001	0.001	0.001	0.004

Integrated panel aerodynamic characteristics	
$C_N' = 0.408$ $C_{BM}' = 0.171$ $C_M' = 0.005$	Lateral c.p. (percent panel span) = 41.9 Chord c.p. (percent M.A.C.) = 23.8

*Resultant pressure coefficient.

TABLE 3

TABULATION OF PRESSURE COEFFICIENTS AND AERODYNAMIC CHARACTERISTICS

OF THE X-1 WING; PULL-UP AT $M \approx 0.62$ - Continued

(b) $M = 0.613$; $C_{N_A} = 0.493$; $\delta_{a_L} = 0.30^\circ$ up

Orifice	Pressure coefficients						
	Station A*	Station B*	Station C*	Station D		Station E*	Station F*
				Upper	Lower		
1	-----	-----	-----	0.361	-----	-----	-----
2	3.198	3.039	2.977	-1.882	0.879	2.643	1.833
3	2.986	2.628	-----	-1.129	.666	2.252	1.327
4	1.762	1.989	1.528	-1.315	.456	1.348	-----
5	-----	-----	-----	-----	-----	-----	.677
6	.769	.893	.875	-.738	-----	.751	-----
7	-----	-----	-----	-.673	-.053	.550	.266
8	-----	.517	-----	-.635	-----	.547	-----
9	.473	.405	-----	-.617	-.153	.429	-----
10	.414	.402	.458	-----	-.112	.399	-----
11	.307	.355	.390	-.505	-.153	.408	.189
12	.239	.325	.328	-.452	-.135	-----	.192
13	.168	.234	.236	-.313	-.106	.234	.142
14	.219	.163	-----	-.310	-----	.186	.077
15	.168	.127	.157	-.215	-.050	.165	.056
16	.059	.083	.118	-----	-.017	.121	.080
17	-----	-----	.106	-----	.027	-----	.041
18	.021	-----	-----	.007	.033	.071	-----
19	.062	.047	-----	.069	-----	-----	.071
20	.018	-----	.047	.113	-----	-.021	-.035
21	-----	-----	-----	.131	-----	-----	-----

Integrated section aerodynamic characteristics						
c_n	0.501	0.545	0.539	0.512	0.477	0.272
$c_{m_{c/4}}$	0.015	0.017	0.002	0.003	0.004	0.007

Integrated panel aerodynamic characteristics	
$C_N' = 0.491$	
$C_{BM}' = 0.204$	Lateral c.p. (percent panel span) = 41.5
$C_M' = 0.010$	Chord c.p. (percent M.A.C.) = 23.0

*Resultant pressure coefficient.

TABLE 3

TABULATION OF PRESSURE COEFFICIENTS AND AERODYNAMIC CHARACTERISTICS

OF THE X-1 WING; PULL-UP AT $M \approx 0.62$ - Continued

(c) $M = 0.616$; $C_{N_A} = 0.597$; $\delta_{a_L} = 0.30^\circ$ up

Orifice	Pressure coefficients						
	Station A*	Station B*	Station C*	Station D		Station E*	Station F*
				Upper	Lower		
1	-----	-----	-----	0.082	-----	-----	-----
2	3.552	3.590	3.380	-----	0.983	3.096	2.501
3	3.214	3.325	-----	-1.896	.794	2.769	1.942
4	2.578	2.861	-----	-1.948	.574	2.034	-----
5	-----	-----	-----	-----	-----	-----	.839
6	.983	.986	1.004	-.795	-----	.895	-----
7	-----	-----	-----	-.721	.029	.653	.312
8	-----	.609	-----	-.683	-----	.653	-----
9	.530	.453	-----	-.642	-.118	.512	-----
10	.450	.456	.524	-----	-.059	.477	-----
11	.338	.397	.456	-.518	-.112	.474	.232
12	.268	.359	.388	-.465	-.112	-----	.227
13	.194	.262	.280	-.312	-.071	.274	.185
14	.247	.200	-----	-.300	-----	.221	.112
15	.182	.156	.182	-.218	-.018	.188	.082
16	.097	.100	.144	-----	.011	.147	.112
17	-----	-----	.127	-----	.041	-----	.074
18	.041	-----	-----	-.006	.041	.077	-----
19	.077	.065	-----	.062	-----	-----	.100
20	.026	-----	.068	.100	-----	-.021	-.009
21	-----	-----	-----	.129	-----	-----	-----

Integrated section aerodynamic characteristics						
c_n	0.637	0.671	0.648	0.671	0.588	0.356
$c_{m_{c/4}}$	0.025	0.025	0.004	0.017	0.010	0.008

Integrated panel aerodynamic characteristics	
$C_N' = 0.610$ $C_{BM}' = 0.255$ $C_M' = 0.018$	Lateral c.p. (percent panel span) = 41.8 Chord c.p. (percent M.A.C.) = 22.2

*Resultant pressure coefficient.

TABLE 3

TABULATION OF PRESSURE COEFFICIENTS AND AERODYNAMIC CHARACTERISTICS

OF THE X-1 WING; PULL-UP AT $M \approx 0.62$ - Continued

(d) $M = 0.616$; $C_{N_A} = 0.752$; $\delta_{a_L} = 0.30^{\circ}$ up

Orifice	Pressure coefficients						
	Station A*	Station B*	Station C*	Station D		Station E*	Station F*
				Upper	Lower		
1	-----	-----	-----	0.067	-----	-----	-----
2	2.626	3.850	3.449	-----	1.044	3.484	2.986
3	2.339	3.539	-----	-2.298	.845	3.425	2.576
4	2.005	3.346	-----	-2.428	.684	2.480	-----
5	-----	-----	-----	-----	-----	-----	1.013
6	1.446	1.153	1.174	-.926	-----	1.030	-----
7	-----	-----	-----	-.677	.061	.755	.372
8	-----	.694	-----	-.630	-----	.700	-----
9	.934	.533	-----	-.592	-.071	.594	-----
10	.855	.521	.559	-----	.005	.530	-----
11	.703	.451	.486	-.492	-.050	.504	.284
12	.556	.395	.416	-.448	-.056	-----	.281
13	.422	.293	.319	-.296	-.018	.304	.217
14	.278	.222	-----	-.299	-----	.246	.164
15	.252	.167	.211	-.217	.008	.208	.158
16	.220	.143	.181	-----	.032	.164	.173
17	-----	-----	.164	-----	.061	-----	.132
18	.111	-----	-----	-.004	.055	.105	-----
19	.091	.111	-----	.055	-----	-----	.132
20	.056	-----	.073	.096	-----	-.026	.018
21	-----	-----	-----	.105	-----	-----	-----

Integrated section aerodynamic characteristics						
c_n	0.792	0.790	0.726	0.793	0.677	0.446
$c_{m_{c/4}}$	-0.016	0.028	0.006	0.030	0.014	0.006

Integrated panel aerodynamic characteristics	
$C_N' = 0.714$ $C_{BM}' = 0.297$ $C_M' = 0.016$	Lateral c.p. (percent panel span) = 41.5 Chord c.p. (percent M.A.C.) = 22.7

*Resultant pressure coefficient.

TABLE 3

TABULATION OF PRESSURE COEFFICIENTS AND AERODYNAMIC CHARACTERISTICS

OF THE X-1 WING; PULL-UP AT $M \approx 0.62$ - Concluded

(e) $M = 0.618$; $C_{N_A} = 0.810$; $\delta_{a_L} = 0.59^\circ$ up

Orifice	Pressure coefficients						
	Station A*	Station B*	Station C*	Station D		Station E*	Station F*
				Upper	Lower		
1	-----	-----	-----	-----	-----	-----	-----
2	1.797	3.390	3.095	-----	1.102	3.820	3.239
3	1.701	3.181	-----	-2.481	.957	3.233	2.918
4	1.441	2.909	-----	-2.409	.741	2.889	-----
5	-----	-----	-----	-----	-----	-----	1.316
6	.975	1.389	1.570	-1.270	-----	1.412	-----
7	-----	-----	-----	-.844	.157	.937	.400
8	-----	.794	-----	-.721	-----	.805	-----
9	.636	.572	-----	-.686	-.015	.633	-----
10	.601	.572	.595	-----	.034	.537	-----
11	.522	.511	.490	-.532	-.015	.470	.344
12	.481	.481	.429	-.476	-.053	-----	.333
13	.566	.394	.327	-.362	-.021	.330	.271
14	.540	.248	-----	-.345	-----	.292	.225
15	.502	.306	.283	-.295	.002	.254	.219
16	.423	.292	.257	-----	.029	.201	.245
17	-----	-----	.242	-----	.020	-----	.172
18	.441	-----	-----	-.109	.002	.163	-----
19	.359	.277	-----	.005	-----	-----	.132
20	.140	-----	.137	.044	-----	.044	.018
21	-----	-----	-----	.043	-----	-----	-----

Integrated section aerodynamic characteristics						
c_n	0.667	0.866	0.856	0.945	0.824	0.542
$c_{m_{c/4}}$	-0.071	0.012	-0.006	0.000	0.013	0.001

Integrated panel aerodynamic characteristics	
$C_N' = 0.810$	
$C_{BM}' = 0.353$	Lateral c.p. (percent panel span) = 43.6
$C_M' = -0.002$	Chord c.p. (percent M.A.C.) = 25.2

*Resultant pressure coefficient.

NACA

TABLE 4

TABULATION OF PRESSURE COEFFICIENTS AND AERODYNAMIC CHARACTERISTICS

OF THE X-1 WING; PULL-UP AT $M \approx 0.71$

(a) $M = 0.705$; $C_{N_A} = 0.247$; $\delta_{a_L} = 0.20^\circ$ up

Orifice	Pressure coefficients						
	Station A*	Station B*	Station C*	Station D		Station E*	Station F*
				Upper	Lower		
1	-----	-----	-----	0.954	-----	-----	-----
2	1.687	1.129	1.176	-.518	.480	1.308	0.787
3	1.169	1.002	-----	-.537	.313	.995	.570
4	.852	.871	.895	-.790	.153	.673	-----
5	-----	-----	-----	-----	-----	-----	.329
6	.456	.544	.515	-.620	-----	.413	-----
7	-----	-----	-----	-.628	-.234	.346	-----
8	-----	.291	-----	-.618	-----	.363	-----
9	.255	.270	-----	-.613	-.293	.267	-----
10	.258	.239	.322	-----	-.272	.270	-----
11	.174	.208	.253	-.523	-.298	.298	.131
12	.112	.193	.208	-.475	-.239	-----	.148
13	.084	.098	.119	-.310	-.212	.160	.100
14	.153	.079	-----	-.327	-----	.119	.038
15	.105	.048	.076	-.220	-.115	.124	.031
16	.012	.024	.062	-----	-.062	.081	.055
17	-----	-----	.074	-----	-.010	-----	.017
18	-.005	-----	-----	.014	-.019	.057	-----
19	.036	.024	-----	.062	-----	-----	-.036
20	.014	-----	.038	.112	-----	-.021	-.052
21	-----	-----	-----	.129	-----	-----	-----

Integrated section aerodynamic characteristics						
c_n	0.263	0.280	0.316	0.306	0.268	0.145
$c_{m_{c/4}}$	0.008	0.004	-0.005	-0.002	-0.007	0.001

Integrated panel aerodynamic characteristics	
$C_N' = 0.272$	
$C_{BM}' = 0.115$	Lateral c.p. (percent panel span) = 42.2
$C_M' = 0.001$	Chord c.p. (percent M.A.C.) = 24.8

*Resultant pressure coefficient.

TABLE 4

TABULATION OF PRESSURE COEFFICIENTS AND AERODYNAMIC CHARACTERISTICS

OF THE X-1 WING; PULL-UP AT $M \approx 0.71$ - Continued

(b) $M = 0.706$; $C_{N_A} = 0.436$; $\delta_{a_L} = 0.30^\circ$ up

Orifice	Pressure coefficients						
	Station A*	Station B*	Station C*	Station D		Station E*	Station F*
				Upper	Lower		
1	-----	-----	-----	0.684	-----	-----	-----
2	2.346	2.070	2.236	-.970	0.731	2.034	1.665
3	2.201	2.046	-----	-.958	.598	1.787	1.237
4	2.030	1.746	-----	-1.260	.358	1.259	-----
5	-----	-----	-----	-----	-----	-----	.581
6	.702	.726	.792	-.708	-----	.654	-----
7	-----	-----	-----	-.701	-.121	.528	-----
8	-----	.466	-----	-.699	-----	.519	-----
9	.452	.366	-----	-.677	-.248	.428	-----
10	.404	.381	.462	-----	-.185	.385	-----
11	.278	.340	.374	-.549	-.225	.390	.188
12	.217	.307	.302	-.489	-.197	-----	.183
13	.167	.188	.174	-.328	-.159	.221	.136
14	.193	.136	-----	-.330	-----	.157	.069
15	.148	.102	.119	-.228	-.087	.152	.059
16	.040	.059	.100	-----	-.042	.098	.076
17	-----	-----	.086	-----	.008	-----	.038
18	.017	-----	-----	-.002	.032	.069	-----
19	.055	.045	-----	.058	-----	-----	.059
20	.021	-----	.055	.108	-----	-.029	-.038
21	-----	-----	-----	.124	-----	-----	-----

Integrated section aerodynamic characteristics						
c_n	0.476	0.462	0.514	0.456	0.423	0.256
$c_{m_{c/4}}$	0.018	0.010	0.004	0.001	0.000	0.004

Integrated panel aerodynamic characteristics	
$C_N' = 0.439$	
$C_{BM}' = 0.183$	Lateral c.p. (percent panel span) = 41.7
$C_M' = 0.006$	Chord c.p. (percent M.A.C.) = 23.7

*Resultant pressure coefficient.

TABLE 4

TABULATION OF PRESSURE COEFFICIENTS AND AERODYNAMIC CHARACTERISTICS

OF THE X-1 WING; PULL-UP AT $M \approx 0.71$ - Continued

(c) $M = 0.705$; $C_{N_A} = 0.509$; $\delta_{a_L} = 0.30^{\circ}$ up

Orifice	Pressure coefficients						
	Station A*	Station B*	Station C*	Station D		Station E*	Station F*
				Upper	Lower		
1	-----	-----	-----	0.571	-----	-----	-----
2	2.582	2.362	2.403	-1.305	0.831	2.269	1.885
3	2.498	2.267	-----	-1.135	.652	2.128	1.596
4	2.291	1.971	-----	-1.381	.442	1.663	-----
5	-----	-----	-----	-----	-----	-----	.713
6	.730	1.098	1.167	-.906	-----	.694	-----
7	-----	-----	-----	-.670	-.081	.597	-----
8	-----	.451	-----	-.677	-----	.585	-----
9	.482	.367	-----	-.675	-.221	.446	-----
10	.429	.389	.468	-----	-.152	.422	-----
11	.303	.351	.387	-.553	-.198	.425	.203
12	.239	.313	.322	-.493	-.193	-----	.196
13	.181	.196	.212	-.324	-.143	.234	.150
14	.210	.162	-----	-.336	-----	.172	.091
15	.162	.107	.136	-.231	-.071	.157	.067
16	.048	.074	.107	-----	-.038	.112	.086
17	-----	-----	.095	-----	.012	-----	.055
18	.017	-----	-----	-.002	.036	.069	-----
19	.055	.052	-----	.055	-----	-----	.081
20	.031	-----	.055	.098	-----	-.029	-.019
21	-----	-----	-----	.122	-----	-----	-----

Integrated section aerodynamic characteristics						
c_n	0.527	0.554	0.614	0.534	0.482	0.316
$c_{m_{c/4}}$	0.021	0.018	0.009	0.008	0.005	0.007

Integrated panel aerodynamic characteristics	
$C_N' = 0.517$	
$C_{BM}' = 0.215$	Lateral c.p. (percent panel span) = 41.6
$C_M' = 0.012$	Chord c.p. (percent M.A.C.) = 22.7

*Resultant pressure coefficient.

TABLE 4

TABULATION OF PRESSURE COEFFICIENTS AND AERODYNAMIC CHARACTERISTICS

OF THE X-1 WING; PULL-UP AT $M \approx 0.71$ - Continued

(d) $M = 0.706$; $C_{N_A} = 0.611$; $\delta_{a_L} = 0.37^{\circ}$ up

Orifice	Pressure coefficients						
	Station A*	Station B*	Station C*	Station D		Station E*	Station F*
				Upper	Lower		
1	-----	-----	-----	0.424	-----	-----	-----
2	2.822	2.605	2.624	-----	0.907	2.415	2.094
3	2.774	2.520	-----	-1.427	.724	2.308	1.906
4	2.529	2.196	-----	-1.606	.505	1.982	-----
5	-----	-----	-----	-----	-----	-----	.845
6	1.282	1.466	1.494	-1.237	-----	1.064	-----
7	-----	-----	-----	-.742	-.021	.581	-----
8	-----	.500	-----	-.625	-.197	.590	-----
9	.473	.276	-----	-.566	-----	.469	-----
10	.428	.324	.381	-----	-.116	.438	-----
11	.309	.321	.362	-.506	-.159	.459	.238
12	.247	.290	.305	-.468	-.164	-----	.228
13	.181	.212	.219	-.306	-.121	.240	.176
14	.238	.171	-----	-.325	-----	.183	.105
15	.176	.119	.136	-.221	-.061	.176	.086
16	.069	.081	.117	-----	-.028	.128	.119
17	-----	-----	.102	-----	.022	-----	.076
18	.026	-----	-----	.000	.039	.069	-----
19	.074	.059	-----	.055	-----	-----	.107
20	.038	-----	.059	.100	-----	-.029	-.012
21	-----	-----	-----	.129	-----	-----	-----

Integrated section aerodynamic characteristics						
c_n	0.657	0.641	0.704	0.634	0.580	0.356
$c_{m_{c/4}}$	0.029	0.026	0.023	0.021	0.013	0.006

Integrated panel aerodynamic characteristics	
$C_N' = 0.605$	
$C_{BM}' = 0.251$	Lateral c.p. (percent panel span) = 41.5
$C_M' = 0.021$	Chord c.p. (percent M.A.C.) = 21.6

*Resultant pressure coefficient.

TABLE 4

TABULATION OF PRESSURE COEFFICIENTS AND AERODYNAMIC CHARACTERISTICS

OF THE X-1 WING; PULL-UP AT $M \approx 0.71$ - Continued

(e) $M = 0.705$; $C_{N_A} = 0.741$; $\delta_{a_L} = 0.50^\circ$ up

Orifice	Pressure coefficients						
	Station A*	Station B*	Station C*	Station D		Station E*	Station F*
				Upper	Lower		
1	-----	-----	-----	0.309	-----	-----	-----
2	3.042	2.918	2.760	-----	0.985	2.688	2.385
3	2.954	2.825	-----	-1.705	.777	2.562	2.198
4	2.846	2.530	-----	-1.896	.588	2.253	-----
5	-----	-----	-----	-----	-----	-----	1.220
6	1.789	1.870	1.794	-1.543	-----	1.531	-----
7	-----	-----	-----	-1.234	.041	.849	-----
88	-----	1.024	-----	-.897	-----	.629	-----
9	.488	.596	-----	-.820	-.158	.431	-----
10	.421	.433	.574	-----	-.065	.402	-----
11	.311	.287	.387	-.457	-.110	.442	.282
12	.249	.239	.254	-.380	-.148	-----	.280
13	.177	.189	.190	-.258	-.086	.249	.222
14	.234	.172	-----	-.289	-----	.201	.163
15	.177	.108	.129	-.194	-.033	.196	.153
16	.086	.086	.117	-----	.005	.134	.175
17	-----	-----	.115	-----	.033	-----	.117
18	.041	-----	-----	-.002	.045	.069	-----
19	.081	.065	-----	.062	-----	-----	.151
20	.045	-----	.060	.105	-----	-.029	.014
21	-----	-----	-----	.122	-----	-----	-----

Integrated section aerodynamic characteristics						
c_n	0.765	0.811	0.819	0.794	0.696	0.470
$c_{m_{c/4}}$	0.040	0.030	0.018	0.023	0.022	0.003

Integrated panel aerodynamic characteristics	
$C_N' = 0.742$	
$C_{BM}' = 0.310$	Lateral c.p. (percent panel span) = 41.7
$C_M' = 0.024$	Chord c.p. (percent M.A.C.) = 21.8

*Resultant pressure coefficient.

TABLE 4

TABULATION OF PRESSURE COEFFICIENTS AND AERODYNAMIC CHARACTERISTICS

OF THE X-1 WING; PULL-UP AT $M \approx 0.71$ - Concluded

(f) $M = 0.706$; $C_{N_A} = 0.798$; $\delta_{a_L} = 0.57^{\circ}$ up

Orifice	Pressure coefficients						
	Station A*	Station B*	Station C*	Station D		Station E*	Station F*
				Upper	Lower		
1	-----	-----	-----	0.159	-----	-----	-----
2	3.091	3.096	2.882	-----	1.015	2.798	2.552
3	3.093	3.072	-----	-1.837	.850	2.728	2.385
4	2.953	2.769	-----	-2.068	.624	2.440	-----
5	-----	-----	-----	-----	-----	-----	1.545
6	1.932	1.801	1.526	-1.594	-----	1.758	-----
7	-----	-----	-----	-1.184	.080	1.092	-----
8	-----	.985	-----	-1.024	-----	.630	-----
9	.575	.613	-----	-.986	-.123	.484	-----
10	.467	.501	.780	-----	-.037	.363	-----
11	.339	.367	.644	-.666	-.101	.410	.322
12	.332	.322	.546	-.514	-.113	-----	.310
13	.203	.286	.370	-.278	-.073	.255	.260
14	.210	.181	-----	-.325	-----	.205	.207
15	.191	.191	.241	-.228	-.034	.207	.196
16	.095	.155	.234	-----	-.001	.141	.224
17	-----	-----	.198	-----	.028	-----	.153
18	.091	-----	-----	-.037	.023	.079	-----
19	.107	.157	-----	.004	-----	-----	.181
20	.045	-----	.141	.056	-----	-.017	.036
21	-----	-----	-----	.090	-----	-----	-----

Integrated section aerodynamic characteristics						
c_n	0.838	0.867	0.871	0.894	0.764	0.578
$c_{m_{c/4}}$	0.032	0.017	-0.016	0.012	0.027	0.001

Integrated panel aerodynamic characteristics	
$C_N' = 0.816$	
$C_{BM}' = 0.347$	Lateral c.p. (percent panel span) = 42.5
$C_M' = 0.013$	Chord c.p. (percent M.A.C.) = 23.4

*Resultant pressure coefficient.

TABLE 5

TABULATION OF PRESSURE COEFFICIENTS AND AERODYNAMIC CHARACTERISTICS

OF THE X-1 WING; PULL-UP AT $M \approx 0.80$

(a) $M = 0.798$; $C_{N_A} = 0.405$; $\delta_{a_L} = 0.04^{\circ}$ up

Orifice	Pressure coefficients						
	Station A*	Station B*	Station C*	Station D		Station E*	Station F*
				Upper	Lower		
1	-----	-----	-----	1.013	-----	-----	-----
2	1.379	1.136	1.156	-.395	0.540	1.381	0.955
3	1.413	1.081	-----	-.460	.388	1.091	.733
4	1.112	.999	.856	-.680	.173	.767	-----
5	-----	-----	-----	-----	-----	-----	.534
6	.631	.774	.722	-.797	-----	.651	-----
7	-----	-----	-----	-.902	-.202	.573	-----
8	-----	.542	-----	-.947	-----	.610	-----
9	.631	.602	-----	-.988	-.389	.568	-----
10	.662	.589	.646	-----	-.392	.539	-----
11	.646	.636	.693	-1.046	-.434	.578	.280
12	.298	.518	.453	-.729	-.337	-----	.285
13	.133	.207	.249	-.486	-.293	.296	.149
14	.060	.113	-----	-.470	-----	.220	.068
15	.039	.092	.241	-.397	-.159	.152	.050
16	-.013	.042	.175	-----	-.102	.105	.071
17	-----	-----	.133	-----	-.039	-----	.031
18	-.018	-----	-----	-.209	.029	.055	-----
19	.024	.005	-----	-.078	-----	-----	.063
20	.005	-----	.029	.024	-----	-.024	-.042
21	-----	-----	-----	.063	-----	-----	-----

Integrated section aerodynamic characteristics						
c_n	0.399	0.433	0.458	0.460	0.404	0.241
$c_{m_{c/4}}$	-0.001	-0.011	-0.031	-0.042	-0.021	-0.004

Integrated panel aerodynamic characteristics	
$C_N' = 0.412$	
$C_{BM}' = 0.175$	Lateral c.p. (percent panel span) = 42.4
$C_M' = -0.018$	Chord c.p. (percent M.A.C.) = 29.3

*Resultant pressure coefficient.

TABLE 5

TABULATION OF PRESSURE COEFFICIENTS AND AERODYNAMIC CHARACTERISTICS

OF THE X-1 WING; PULL-UP AT $M \approx 0.80$ - Continued

(b) $M = 0.799$; $C_{N_A} = 0.456$; $\delta_{a_L} = 0.04^{\circ}$ up

Orifice	Pressure coefficients						
	Station A*	Station B*	Station C*	Station D		Station E*	Station F*
				Upper	Lower		
1	-----	-----	-----	0.945	-----	-----	-----
2	1.647	1.378	1.394	-.465	0.630	1.509	1.120
3	1.641	1.277	-----	-.527	.460	1.235	.935
4	1.326	1.162	1.068	-.782	.247	.917	-----
5	-----	-----	-----	-----	-----	-----	.586
6	.743	.873	.818	-.866	-----	.717	-----
7	-----	-----	-----	-.936	-.251	.646	-----
8	-----	.690	-----	-.973	-----	.654	-----
9	.730	.670	-----	-1.038	-.368	.633	-----
10	.756	.672	.610	-----	-.368	.612	-----
11	.698	.677	.357	-.676	-.410	.677	.294
12	.276	.261	.253	-.579	-.326	-----	.313
13	.149	.214	.258	-.493	-.287	.287	.164
14	.081	.130	-----	-.480	-----	.253	.076
15	.055	.138	.320	-.436	-.170	.193	.050
16	.000	.109	.279	-----	-.113	.130	.070
17	-----	-----	.261	-----	-.055	-----	.036
18	-.008	-----	-----	-.306	.007	.063	-----
19	.039	.026	-----	-.173	-----	-----	.052
20	.005	-----	.065	-.084	-----	-.023	-.042
21	-----	-----	-----	-.001	-----	-----	-----

Integrated section aerodynamic characteristics						
c_n	0.474	0.488	0.510	0.479	0.460	0.261
$c_{m_{c/4}}$	0.000	-0.012	-0.036	-0.038	-0.022	-0.002

Integrated panel aerodynamic characteristics	
$C_N' = 0.456$	
$C_{BM}' = 0.191$	Lateral c.p. (percent panel span) = 42.0
$C_M' = -0.020$	Chord c.p. (percent M.A.C.) = 29.3

*Resultant pressure coefficient.

TABLE 5

TABULATION OF PRESSURE COEFFICIENTS AND AERODYNAMIC CHARACTERISTICS

OF THE X-1 WING; PULL-UP AT $M \approx 0.80$ - Continued

(c) $M = 0.798$; $C_{N_A} = 0.620$; $\delta_{a_L} = 0.13^\circ$ up

Orifice	Pressure coefficients						
	Station A*	Station B*	Station C*	Station D		Station E*	Station F*
				Upper	Lower		
1	-----	-----	-----	0.800	-----	-----	-----
2	2.092	1.693	1.857	-.807	.732	1.729	1.510
3	2.154	1.721	-----	-.721	.602	1.664	1.265
4	1.841	1.500	1.359	-.989	.362	1.471	-----
5	-----	-----	-----	-----	-----	-----	.803
6	1.101	1.153	.986	-.995	-----	.981	-----
7	-----	-----	-----	-1.039	-.139	.887	-----
8	-----	.921	-----	-.958	-----	.798	-----
9	.975	.790	-----	-.885	-.366	.809	-----
10	.616	.616	.576	-----	-.309	.798	-----
11	.430	.391	.376	-.580	-.366	.663	.394
12	.347	.336	.331	-.559	-.332	-----	.344
13	.193	.271	.271	-.549	-.293	.310	.206
14	.120	.170	-----	-.541	-----	.297	.083
15	.102	.222	.300	-.502	-.199	.271	.057
16	.021	.183	.266	-----	-.136	.180	.089
17	-----	-----	.261	-----	-.095	-----	.047
18	.018	-----	-----	-.392	-.032	.138	-----
19	.052	.115	-----	-.285	-----	-----	.099
20	.005	-----	.123	-.209	-----	-.018	.021
21	-----	-----	-----	-.116	-----	-----	-----

Integrated section aerodynamic characteristics						
c_n	0.619	0.619	0.594	0.568	0.606	0.361
$c_{m_{c/4}}$	0.006	-0.018	-0.034	-0.035	-0.024	-0.005

Integrated panel aerodynamic characteristics	
$C_N' = 0.570$	
$C_{BM}' = 0.241$	Lateral c.p. (percent panel span) = 42.2
$C_M' = -0.020$	Chord c.p. (percent M.A.C.) = 28.4

*Resultant pressure coefficient.

TABLE 5

TABULATION OF PRESSURE COEFFICIENTS AND AERODYNAMIC CHARACTERISTICS

OF THE X-1 WING; PULL-UP AT $M \approx 0.80$ - Continued

(d) $M = 0.798$; $C_{N_A} = 0.690$; $\delta_{a_L} = 0.41^\circ$ up

Orifice	Pressure coefficients						
	Station A*	Station B*	Station C*	Station D		Station E*	Station F*
				Upper	Lower		
1	-----	-----	-----	0.576	0.900	-----	-----
2	2.256	2.034	2.076	-1.132	.670	1.948	1.672
3	2.360	2.003	-----	-.910	.464	1.771	1.458
4	2.016	1.716	-----	-1.077	-----	1.745	-----
5	-----	-----	-----	-----	-----	-----	1.041
6	1.288	1.291	1.275	-1.111	-----	1.262	-----
7	-----	-----	-----	-.910	-.047	1.049	-----
8	-----	.850	-----	-.816	-----	.949	-----
9	.832	.582	-----	-.707	-.316	.897	-----
10	.636	.417	.511	-----	-.274	.696	-----
11	.378	.347	.300	-.608	-.297	.537	.480
12	.170	.368	.261	-.589	-.329	-----	.376
13	.149	.404	.240	-.600	-.290	.326	.172
14	.112	.222	-----	-.592	-----	.297	.076
15	.133	.352	.290	-.535	-.214	.253	.065
16	.065	.342	.292	-----	-.149	.219	.094
17	-----	-----	.323	-----	-.128	-----	.060
18	.083	-----	-----	-.446	-.097	.167	-----
19	.097	.292	-----	-.378	-----	-----	.117
20	.034	-----	.193	-.290	-----	.010	.000
21	-----	-----	-----	-.203	-----	-----	-----

Integrated section aerodynamic characteristics						
c_n	0.660	0.690	0.688	0.628	0.694	0.467
$c_{m_{c/4}}$	0.012	-0.037	-0.031	-0.032	-0.021	-0.005

Integrated panel aerodynamic characteristics	
$C_N' = 0.647$	
$C_{BM}' = 0.279$	Lateral c.p. (percent panel span) = 43.1
$C_M' = -0.022$	Chord c.p. (percent M.A.C.) = 28.4

*Resultant pressure coefficient.

TABLE 5

TABULATION OF PRESSURE COEFFICIENTS AND AERODYNAMIC CHARACTERISTICS

OF THE X-1 WING; PULL-UP AT $M \approx 0.80$ - Concluded

(e) $M = 0.795$; $C_{N_A} = 0.818$; $\delta_{a_L} = 0.50^\circ$ up

Orifice	Pressure coefficients						
	Station A*	Station B*	Station C*	Station D		Station E*	Station F*
				Upper	Lower		
1	-----	-----	-----	0.329	-----	-----	-----
2	2.690	2.501	2.443	-1.335	1.013	2.259	2.047
3	2.602	2.411	-----	-1.285	.838	2.170	1.897
4	2.388	2.251	-----	-1.448	.607	2.125	-----
5	-----	-----	-----	-----	-----	-----	1.451
6	1.614	1.601	1.582	-.991	-----	1.580	-----
7	-----	-----	-----	-.842	.064	1.257	-----
8	-----	.848	-----	-.802	-----	1.063	-----
9	.690	.514	-----	-.805	-.259	.884	-----
10	.604	.514	.614	-----	-.167	.711	-----
11	.470	.475	.472	-.789	-.225	.632	.617
12	.441	.417	.420	-.774	-.306	-----	.569
13	.409	.462	.344	-.747	-.259	.449	.252
14	.362	.338	-----	-.721	-----	.417	.100
15	.302	.407	.378	-.697	-.212	.338	.129
16	.157	.378	.367	-----	-.183	.297	.165
17	-----	-----	.409	-----	-.170	-----	.121
18	.333	-----	-----	-.535	-.133	.215	-----
19	.278	.383	-----	-.535	-----	-----	.215
20	.142	-----	.247	-.453	-----	.060	.039
21	-----	-----	-----	-.338	-----	-----	-----

Integrated section aerodynamic characteristics						
c_n	0.824	0.853	0.879	0.767	0.843	0.653
$c_{m_{c/4}}$	-0.017	-0.044	-0.047	-0.053	-0.025	-0.017

Integrated panel aerodynamic characteristics	
$C_N' = 0.809$	
$C_{BM}' = 0.351$	Lateral c.p. (percent panel span) = 43.4
$C_M' = -0.036$	Chord c.p. (percent M.A.C.) = 29.4

*Resultant pressure coefficient.

TABLE 6

TABULATION OF PRESSURE COEFFICIENTS AND AERODYNAMIC CHARACTERISTICS

OF THE X-1 WING; PULL-UP AT $M \approx 0.82$

(a) $M = 0.838$; $C_{N_A} = 0.204$; $\delta_{a_L} = 0.69^\circ$ down

Orifice	Pressure coefficients						
	Station A*	Station B*	Station C*	Station D		Station E*	Station F*
				Upper	Lower		
1	-----	-----	-----	1.114	-----	-----	-----
2	.532	.492	.454	-.001	-----	.705	.408
3	.571	.466	-----	-.183	.213	.496	.198
4	-----	.457	.436	-.385	.069	.380	.167
5	-----	-----	-----	-----	-----	-----	-----
6	-----	.338	.349	-.475	-----	.346	.058
7	-----	-----	-----	-.623	-.368	.238	.174
8	-----	.290	.197	-.673	-----	.304	.174
9	.311	.366	.288	-.755	-.502	.269	-----
10	.338	.239	.273	-----	-.457	.290	-----
11	.323	.219	.338	-.886	-.545	.253	.146
12	.326	.307	.364	-1.003	-.613	-----	.232
13	.338	.034	.211	-.427	-----	-----	.332
14	.166	.172	-----	-.367	-.232	.266	.089
15	.063	.190	.231	-.337	-.132	.352	.042
16	.014	.203	.205	-----	-.090	-----	.051
17	-----	-----	.198	-----	-.039	-----	.013
18	.028	-----	-----	-.156	.065	.146	.089
19	.015	.077	-----	-.129	-----	-----	.049
20	.008	-.008	.049	-.076	-----	-.014	-.044
21	-----	-----	-----	-.036	-----	-----	-----

Integrated section aerodynamic characteristics						
c_n	0.234	0.237	0.253	0.257	0.253	0.115
$c_{m_{c/4}}$	-0.017	-0.026	-0.036	-0.039	-0.039	-0.017

Integrated panel aerodynamic characteristics	
$C_N' = 0.230$	
$C_{BM}' = 0.099$	Lateral c.p. (percent panel span) = 43.2
$C_M' = -0.030$	Chord c.p. (percent M.A.C.) = 37.8

*Resultant pressure coefficient.

TABLE 6

TABULATION OF PRESSURE COEFFICIENTS AND AERODYNAMIC CHARACTERISTICS

OF THE X-1 WING; PULL-UP AT $M \approx 0.82$ - Continued

(b) $M = 0.834$; $C_{N_A} = 0.277$; $\delta_{a_L} = 0.50^{\circ}$ down

Orifice	Pressure coefficient						
	Station A*	Station B*	Station C*	Station D		Station E*	Station F*
				Upper	Lower		
1	-----	-----	-----	1.072	-----	-----	-----
2	0.890	0.653	0.746	-.122	-----	0.979	0.660
3	.907	.714	-----	-.288	.314	.752	.430
4	-----	.669	.618	-.477	.144	.486	.307
5	-----	-----	-----	-----	-----	-----	-----
6	-----	.525	.515	-.609	-----	.482	.162
7	-----	-----	-----	-.730	-.328	.396	.211
8	-----	.399	.380	-.771	-----	.430	.249
9	.425	.455	.473	-.792	-.414	.386	-----
10	.444	.352	.404	-----	-.395	.417	-----
11	.407	.321	.414	-.921	-.543	.366	.175
12	-----	.370	.432	-.843	-.621	-----	.272
13	.241	.155	.311	-.416	-----	-----	.351
14	.128	.179	-----	-.381	-.215	.272	.084
15	.070	.204	.217	-.373	-.150	.345	.048
16	.048	.225	.203	-----	-.102	-----	.056
17	-----	-----	.206	-----	-.046	-----	.015
18	.000	-----	-----	-.153	.045	.114	.089
19	.035	.127	-----	-.152	-----	-----	.046
20	.011	.055	.055	-.108	-----	-.023	-.034
21	-----	-----	-----	-.060	-----	-----	-----

Integrated section aerodynamic characteristics						
c_n	0.325	0.337	0.348	0.319	0.326	0.160
$c_{m_{c/4}}$	-0.013	-0.034	-0.038	-0.036	-0.038	-0.017

Integrated panel aerodynamic characteristics	
$C_N' = 0.310$	
$C_{BM}' = 0.129$	Lateral c.p. (percent panel span) = 41.8
$C_M' = -0.031$	Chord c.p. (percent M.A.C.) = 34.9

*Resultant pressure coefficient.

TABLE 6

TABULATION OF PRESSURE COEFFICIENTS AND AERODYNAMIC CHARACTERISTICS

OF THE X-1 WING; PULL-UP AT $M \approx 0.82$ - Continued

(c) $M = 0.829$; $C_{N_A} = 0.407$; $\delta_{a_L} = 0.53^{\circ}$ down

Orifice	Pressure coefficients						
	Station A*	Station B*	Station C*	Station D		Station E*	Station F*
				Upper	Lower		
1	-----	-----	-----	0.943	-----	-----	-----
2	1.419	0.957	1.419	-.370	-----	1.511	1.165
3	1.546	1.244	-----	-.501	.500	1.289	.918
4	-----	1.106	.973	-.729	.267	.997	.689
5	-----	-----	-----	-----	-----	-----	-----
6	-----	.847	.794	-.849	-----	.714	.360
7	-----	-----	-----	-.870	-.222	.635	.363
8	-----	.712	.651	-.915	-----	.655	.367
9	.683	.685	.703	-.933	-.333	.609	-----
10	.674	.364	.652	-----	-.348	.592	-----
11	.565	.088	.650	-.518	-.496	.578	.251
12	.233	.034	.114	-.463	-.553	-----	.346
13	.130	.151	.227	-.473	-----	.319	.408
14	.071	.185	-----	-.425	-.215	.336	.192
15	.076	.226	.256	-.418	-.189	.360	.086
16	.100	.247	.220	-----	-.141	-----	.071
17	-----	-----	.247	-----	-.054	-----	.020
18	.078	-----	-----	-.281	-.011	.223	.100
19	.083	.203	-----	-.287	-----	-----	.061
20	.028	.203	.088	-.254	-----	.013	-.030
21	-----	-----	-----	-.191	-----	-----	-----

Integrated section aerodynamic characteristics						
c_n	0.504	0.467	0.498	0.429	0.510	0.287
$c_{m_{c/4}}$	-0.006	-0.031	-0.036	-0.032	-0.047	-0.017

Integrated panel aerodynamic characteristics	
$C_N' = 0.451$	
$C_{BM}' = 0.193$	Lateral c.p. (percent panel span) = 42.7
$C_M' = -0.029$	Chord c.p. (percent M.A.C.) = 31.4

*Resultant pressure coefficient.

TABLE 6

TABULATION OF PRESSURE COEFFICIENTS AND AERODYNAMIC CHARACTERISTICS

OF THE X-1 WING; PULL-UP AT $M \approx 0.82$ - Continued

(d) $M = 0.824$; $C_{N_A} = 0.501$; $\delta_{a_L} = 0.53^{\circ}$ down

Orifice	Pressure coefficients						
	Station A*	Station B*	Station C*	Station D		Station E*	Station F*
				Upper	Lower		
1	-----	-----	-----	0.809	-----	-----	-----
2	1.687	1.198	1.835	-.634	-----	1.835	1.506
3	1.908	1.661	-----	-.632	0.625	1.664	1.259
4	-----	1.465	1.417	-.954	.426	1.381	1.009
5	-----	-----	-----	-----	-----	-----	-----
6	-----	1.138	1.048	-1.018	-----	.960	.555
7	-----	-----	-----	-1.026	-.145	.889	.488
8	-----	.745	.881	-1.063	-----	.888	.486
9	.892	.299	.868	-.870	-.267	.809	-----
10	.866	.232	.804	-----	-.297	.747	-----
11	.363	.174	.263	-.514	-.413	.597	.357
12	.189	.179	.147	-.507	-.420	-----	.454
13	.131	.246	.216	-.472	-----	.347	.442
14	.078	.260	-----	-.483	-.209	.378	.181
15	.060	.283	.138	-.484	-.223	.415	.084
16	.084	.353	.218	-----	-.177	-----	.078
17	-----	-----	.265	-----	-.106	-----	.028
18	.090	-----	-----	-.379	-.058	.235	.124
19	.108	.321	-----	.386	-----	-----	.077
20	.044	.292	.169	.388	-----	.018	-.013
21	-----	-----	-----	-.334	-----	-----	-----

Integrated section aerodynamic characteristics						
c_n	0.604	0.579	0.612	0.559	0.640	0.391
$c_{m_{c/4}}$	-0.002	-0.042	-0.030	-0.038	-0.047	-0.015

Integrated panel aerodynamic characteristics	
$C_N' = 0.567$	
$C_{BM}' = 0.245$	Lateral c.p. (percent panel span) = 43.3
$C_M' = -0.031$	Chord c.p. (percent M.A.C.) = 30.5

*Resultant pressure coefficient.

TABLE 6

TABULATION OF PRESSURE COEFFICIENTS AND AERODYNAMIC CHARACTERISTICS

OF THE X-1 WING; PULL-UP AT $M \approx 0.82$ - Continued

(e) $M = 0.818$; $C_{N_A} = 0.608$; $\delta_{a_L} = 0.53^\circ$ down

Orifice	Pressure coefficients						
	Station A*	Station B*	Station C*	Station D		Station E*	Station F*
				Upper	Lower		
1	-----	-----	-----	0.674	-----	-----	-----
2	1.816	1.437	2.263	-.990	-----	2.081	1.762
3	2.117	1.680	-----	-1.016	0.721	1.992	1.542
4	-----	1.769	1.726	-1.154	.517	1.704	1.242
5	-----	-----	-----	-----	-----	-----	-----
6	-----	1.345	1.343	-1.103	-----	1.191	.719
7	-----	-----	-----	-.878	-.069	1.094	.640
8	-----	.558	1.084	-.645	-----	1.058	.617
9	.699	.417	1.093	-.614	-.200	1.009	-----
10	.490	.351	.761	-----	-.231	.473	-----
11	.265	.299	.464	-.604	-.328	.325	.469
12	.181	.313	.441	-.613	-.337	-----	.564
13	.178	.344	.318	-.604	-----	.351	.536
14	.144	.351	-----	-.602	-.222	.383	.102
15	.180	.397	.148	-.600	-.215	.431	.049
16	.187	.431	.134	-----	-.190	-----	.079
17	-----	-----	.214	-----	-.140	-----	.037
18	.160	-----	-----	-.443	-.072	.372	.147
19	.178	.417	-----	-.433	-----	-----	.109
20	.115	.420	.145	-.406	-----	.128	.010
21	-----	-----	-----	-.360	-----	-----	-----

Integrated section aerodynamic characteristics						
c_n	0.614	0.693	0.751	0.637	0.735	0.479
$c_{m_{c/4}}$	-0.005	-0.057	-0.025	-0.042	-0.050	-0.016

Integrated panel aerodynamic characteristics	
$C_N' = 0.659$	
$C_{BM}' = 0.289$	Lateral c.p. (percent panel span) = 42.3
$C_M' = -0.036$	Chord c.p. (percent M.A.C.) = 30.4

*Resultant pressure coefficient.

TABLE 6

TABULATION OF PRESSURE COEFFICIENTS AND AERODYNAMIC CHARACTERISTICS

OF THE X-1 WING; PULL-UP AT $M \approx 0.82$ - Concluded

(f) $M = 0.804$; $C_{N_A} = 0.700$; $\delta_{a_L} = 0.25^\circ$ down

Orifice	Pressure coefficients						
	Station A*	Station B*	Station C*	Station D		Station E*	Station F*
				Upper	Lower		
1	-----	-----	-----	0.509	-----	-----	-----
2	1.926	1.673	2.457	-1.091	-----	2.222	2.111
3	1.970	-----	-----	-1.302	0.841	2.316	1.804
4	-----	2.064	1.961	-1.348	.605	1.950	1.533
5	-----	-----	-----	-----	-----	-----	-----
6	-----	1.530	1.645	-.835	-----	1.577	.979
7	-----	-----	-----	-.704	.045	1.337	.841
8	-----	.777	1.035	-.692	-----	1.063	.802
9	.632	.588	.931	-.665	-.082	.773	-----
10	.554	.531	.668	-----	-.128	.561	-----
11	.405	.400	.485	-.679	-.220	.557	.627
12	.340	.372	.450	-.709	-.235	-----	.705
13	.311	.364	.359	-.700	-----	.405	.356
14	.254	.393	-----	-.701	-.235	.314	.021
15	.279	.412	.296	-.704	-.192	.299	.067
16	.299	.412	.293	-----	-.175	-----	.125
17	-----	-----	.359	-----	-.165	-----	.081
18	.302	-----	-----	-.547	-.078	.148	.151
19	.287	.358	-----	-.579	-----	-----	.144
20	.193	.391	.199	-.544	-----	.019	.029
21	-----	-----	-----	-.490	-----	-----	-----

Integrated section aerodynamic characteristics						
c_n	0.638	0.798	0.857	0.739	0.798	0.603
$c_{m_{c/4}}$	-0.034	-0.052	-0.037	-0.072	-0.018	-0.016

Integrated panel aerodynamic characteristics	
$C_N' = 0.755$	
$C_{BM}' = 0.332$	Lateral c.p. (percent panel span) = 43.9
$C_M' = -0.041$	Chord c.p. (percent M.A.C.) = 30.4

*Resultant pressure coefficient.

TABLE 7

TABULATION OF PRESSURE COEFFICIENTS AND AERODYNAMIC CHARACTERISTICS

OF THE X-1 WING; PULL-UP AT $M \approx 0.85$

(a) $M = 0.860$; $C_{N_A} = 0.136$; $\delta_{a_L} = 0.08^{\circ}$ up

Orifice	Pressure coefficients						
	Station A*	Station B*	Station C*	Station D		Station E*	Station F*
				Upper	Lower		
1	-----	-----	-----	1.132	-----	-----	-----
2	0.413	0.372	0.359	.111	-----	0.597	0.310
3	.478	.386	-----	-.111	.202	.384	.104
4	-----	.381	.375	-.303	.065	.274	.122
5	-----	-----	-----	-----	-----	-----	-----
6	-----	.283	.274	-.412	-----	.271	.046
7	-----	-----	-----	-.568	-.353	.207	.155
8	-----	.267	.149	-.629	-----	.249	.167
9	.255	.298	.240	-.711	-.511	.214	-----
10	.282	.188	.220	-----	-.486	.246	-----
11	.246	.167	.264	-.836	-.581	.214	.113
12	.207	.238	.295	-.913	-.648	-----	.201
13	.089	-.295	.219	-.373	-----	.268	.143
14	-.110	-.372	-----	-.327	-.770	-.274	-.042
15	.036	-.103	-.368	-.319	-.790	-.046	.031
16	.037	.171	.085	-----	-.294	-----	.054
17	-----	-----	.134	-----	-.088	-----	.013
18	.015	-----	-----	-.178	.037	.229	.010
19	.016	.149	-----	-.178	-----	-----	.006
20	.003	.107	.071	-.137	-----	.060	-.057
21	-----	-----	-----	-.114	-----	-----	-----

Integrated section aerodynamic characteristics						
c_n	0.171	0.163	0.159	0.124	0.188	0.082
$c_{m_{c/4}}$	-0.004	-0.012	-0.009	-0.002	-0.028	-0.007

Integrated panel aerodynamic characteristics	
$C_N' = 0.148$	
$C_{BM}' = 0.061$	Lateral c.p. (percent panel span) = 41.4
$C_M' = -0.010$	Chord c.p. (percent M.A.C.) = 32.0

*Resultant pressure coefficient.

TABLE 7

TABULATION OF PRESSURE COEFFICIENTS AND AERODYNAMIC CHARACTERISTICS

OF THE X-1 WING; PULL-UP AT $M \approx 0.85$ - Continued

(b) $M = 0.859$; $C_{N_A} = 0.305$; $\delta_{a_L} = 0.53^\circ$ down

Orifice	Pressure coefficients						
	Station A*	Station B*	Station C*	Station D		Station E*	Station F*
				Upper	Lower		
1	-----	-----	-----	1.017	-----	-----	-----
2	1.188	0.777	1.100	-.186	-----	1.267	0.917
3	1.209	.984	-----	-.365	0.444	1.036	.685
4	-----	.876	.740	-.540	.264	.741	.537
5	-----	-----	-----	-----	-----	-----	-----
6	-----	.700	.653	-.705	-----	.590	.297
7	-----	-----	-----	-.757	-.251	.513	.302
8	-----	.550	.502	-.807	-----	.522	.311
9	.533	.503	.568	-.830	-.362	.465	-----
10	.539	.450	.516	-----	-.337	.497	-----
11	.465	.386	.530	-.526	-.485	.481	.223
12	.000	-.080	.038	-.409	-.571	-----	.299
13	-.133	-.148	-.083	-.375	-----	-.078	.206
14	-.102	-.215	-----	-.367	-.711	-.146	.037
15	.030	-.071	-.195	-.369	-.711	-.055	.068
16	.124	.206	.231	-----	-.293	-----	.112
17	-----	-----	.268	-----	-.112	-----	.038
18	.126	-----	-----	-.266	.024	.365	.080
19	.129	.225	-----	-.285	-----	-----	.037
20	.081	.201	.092	-.266	-----	.151	-.036
21	-----	-----	-----	-.220	-----	-----	-----

Integrated section aerodynamic characteristics						
c_n	0.363	0.357	0.292	0.290	0.371	0.225
$c_{m_{c/4}}$	-0.004	-0.017	-0.017	-0.004	-0.032	-0.010

Integrated panel aerodynamic characteristics	
$C_N' = 0.312$	
$C_{BM}' = 0.133$	Lateral c.p. (percent panel span) = 42.6
$C_M' = -0.014$	Chord c.p. (percent M.A.C.) = 29.5

*Resultant pressure coefficient.

NACA

TABLE 7

TABULATION OF PRESSURE COEFFICIENTS AND AERODYNAMIC CHARACTERISTICS

OF THE X-1 WING; PULL-UP AT $M \approx 0.85$ - Continued

(c) $M = 0.858$; $C_{N_A} = 0.390$; $\delta_{a_L} = 0.72^{\circ}$ down

Orifice	Pressure coefficients						
	Station A*	Station B*	Station C*	Station D		Station E*	Station F*
				Upper	Lower		
1	-----	-----	-----	0.941	-----	-----	-----
2	1.482	0.963	1.407	-.318	-----	1.506	1.192
3	1.513	1.251	-----	-.480	0.532	1.329	.941
4	-----	1.108	1.050	-.701	.342	1.064	.769
5	-----	-----	-----	-----	-----	-----	-----
6	-----	.859	.774	-.816	-----	.739	.415
7	-----	-----	-----	-.853	-.189	.664	.379
8	-----	.710	.645	-.893	-----	.662	.389
9	.648	.658	.690	-.921	-.309	.603	-----
10	.639	.209	.621	-----	-.310	.594	-----
11	.553	.000	.648	-.452	-.458	.569	.267
12	.010	-.058	.121	-.431	-.543	-----	.329
13	-.015	-.087	-.032	-.418	-----	-.012	.245
14	-.031	-.102	-----	-.422	-.667	-.055	.153
15	.052	.155	-.142	-.409	-.652	.041	.063
16	.112	.286	.226	-----	-.228	-----	.155
17	-----	-----	.277	-----	-.117	-----	.055
18	.109	-----	-----	-.328	.000	.409	.128
19	.146	.282	-----	-.334	-----	-----	.071
20	.081	.273	.139	-.321	-----	.156	-.021
21	-----	-----	-----	-.285	-----	-----	-----

Integrated section aerodynamic characteristics						
c_n	0.466	0.439	0.458	0.395	0.483	0.299
$c_{m_{c/4}}$	-0.003	-0.025	-0.021	-0.013	-0.038	-0.014

Integrated panel aerodynamic characteristics	
$C_N' = 0.424$	
$C_{BM}' = 0.183$	Lateral c.p. (percent panel span) = 43.3
$C_M' = -0.019$	Chord c.p. (percent M.A.C.) = 29.6

*Resultant pressure coefficient.

TABLE 7

TABULATION OF PRESSURE COEFFICIENTS AND AERODYNAMIC CHARACTERISTICS

OF THE X-1 WING; PULL-UP AT $M \approx 0.85$ - Continued

(d) $M = 0.852$; $C_{N_A} = 0.500$; $\delta_{a_L} = 0.69^\circ$ down

Orifice	Pressure coefficients						
	Station A*	Station B*	Station C*	Station D		Station E*	Station F*
				Upper	Lower		
1	-----	-----	-----	0.842	-----	-----	-----
2	1.773	1.218	1.762	-.605	-----	1.693	1.433
3	1.837	1.579	-----	-.574	.634	1.582	1.160
4	-----	1.395	1.367	-.857	.429	1.322	.964
5	-----	-----	-----	-----	-----	-----	-----
6	-----	1.059	.991	-.946	-----	.902	.532
7	-----	-----	-----	-.973	-.141	.827	.489
8	-----	.835	.827	-1.003	-----	.835	.469
9	.827	.321	.810	-.897	-.263	.761	-----
10	.793	.205	.741	-----	-.284	.698	-----
11	.447	.113	.466	-.511	-.434	.677	.333
12	.149	.074	.250	-.502	-.507	-----	.386
13	.126	.065	.015	-.483	-----	.108	.296
14	.030	.159	-----	-.471	-.630	.074	.186
15	.070	.296	.131	-.478	-.272	.394	.340
16	.105	.364	.184	-----	-.174	-----	.250
17	-----	-----	.282	-----	-.131	-----	.074
18	.110	-----	-----	-.401	-.049	.428	.174
19	.138	.362	-----	-.412	-----	-----	.107
20	.082	.337	.217	-.403	-----	.163	-.009
21	-----	-----	-----	-.374	-----	-----	-----

Integrated section aerodynamic characteristics						
c_n	0.586	0.557	0.583	0.514	0.626	0.388
$c_{m_{c/4}}$	-0.006	-0.042	-0.030	-0.031	-0.063	-0.025

Integrated panel aerodynamic characteristics	
$C_N' = 0.544$	
$C_{BM}' = 0.237$	Lateral c.p. (percent panel span) = 43.6
$C_M' = -0.034$	Chord c.p. (percent M.A.C.) = 31.2

*Resultant pressure coefficient.

TABLE 7

TABULATION OF PRESSURE COEFFICIENTS AND AERODYNAMIC CHARACTERISTICS

OF THE X-1 WING; PULL-UP AT $M \approx 0.85$ - Continued

(e) $M = 0.839$; $C_{N_A} = 0.637$; $\delta_{a_L} = 0.05^\circ$ down

Orifice	Pressure coefficients						
	Station A*	Station B*	Station C*	Station D		Station E*	Station F*
				Upper	Lower		
1	-----	-----	-----	0.657	-----	-----	-----
2	1.959	1.450	2.001	-1.005	-----	1.948	1.734
3	2.104	2.039	-----	-1.002	.753	1.910	1.464
4	-----	1.781	1.723	-1.117	.552	1.672	1.242
5	-----	-----	-----	-----	-----	-----	-----
6	-----	1.368	1.322	-1.134	-----	1.181	.726
7	-----	-----	-----	-.892	-.054	1.056	.672
8	-----	.598	1.087	-.663	-----	1.039	.631
9	.734	.438	1.072	-.638	-.202	.985	-----
10	.536	.369	.926	-----	-.234	.628	-----
11	.326	.221	.504	-.626	-.357	.331	.450
12	.210	.240	.396	-.637	-.424	-----	.491
13	.221	.308	.313	-.625	-----	.249	.423
14	.157	.323	-----	-.596	-.347	.323	.331
15	.189	.378	.217	-.610	-.265	.429	.358
16	.189	.415	.201	-----	-.237	-----	.187
17	-----	-----	.281	-----	-.173	-----	.056
18	.199	-----	-----	-.507	-.131	.414	.121
19	.240	.421	-----	-.506	-----	-----	.098
20	.168	.424	.174	-.483	-----	.192	.006
21	-----	-----	-----	-.439	-----	-----	-----

Integrated section aerodynamic characteristics						
c_n	0.650	0.688	0.760	0.632	0.734	0.501
$c_{m_{c/4}}$	-0.013	-0.054	-0.037	-0.037	-0.055	-0.027

Integrated panel aerodynamic characteristics	
$C_N' = 0.671$	
$C_{BM}' = 0.294$	Lateral c.p. (percent panel span) = 43.7
$C_M' = -0.040$	Chord c.p. (percent M.A.C.) = 30.9

*Resultant pressure coefficient.

TABLE 7

TABULATION OF PRESSURE COEFFICIENTS AND AERODYNAMIC CHARACTERISTICS

OF THE X-1 WING; PULL-UP AT $M \approx 0.85$ - Continued

(f) $M = 0.835$; $C_{N_A} = 0.681$; $\delta_{a_L} = 0.20^\circ$ down

Orifice	Pressure coefficients						
	Station A*	Station B*	Station C*	Station D		Station E*	Station F*
				Upper	Lower		
1	-----	-----	-----	0.607	-----	-----	-----
2	2.013	1.540	2.028	-1.085	-----	2.003	1.878
3	2.138	2.154	-----	-1.124	0.791	2.145	1.676
4	-----	1.930	1.840	-1.312	.589	1.833	1.377
5	-----	-----	-----	-----	-----	-----	-----
6	-----	1.448	1.467	-1.182	-----	1.349	.852
7	-----	-----	-----	-.679	.008	1.209	.776
8	-----	.636	1.211	-.659	-----	1.073	.712
9	.799	.529	1.160	-.639	-.149	.675	-----
10	.613	.439	.678	-----	-.187	.492	-----
11	.381	.381	.499	-.617	-.303	.415	.521
12	.309	.387	.399	-.632	-.342	-----	.572
13	.267	.396	.252	-.618	-----	.415	.521
14	.233	.392	-----	-.626	-.319	.444	.338
15	.241	.415	.259	-.638	-.253	.470	.152
16	.186	.419	.224	-----	-.225	-----	.131
17	-----	-----	.329	-----	-.199	-----	.075
18	.180	-----	-----	-.547	-.125	.288	.113
19	.242	.439	-----	-.601	-----	-----	.117
20	.169	.401	.242	-.571	-----	.061	.008
21	-----	-----	-----	-.524	-----	-----	-----

Integrated section aerodynamic characteristics						
c_n	0.675	0.763	0.809	0.700	0.767	0.560
$c_{m_{c/4}}$	-0.018	-0.059	-0.040	-0.045	-0.041	-0.022

Integrated panel aerodynamic characteristics	
$C_N' = 0.731$	
$C_{BM}' = 0.323$	Lateral c.p. (percent panel span) = 44.2
$C_M' = -0.040$	Chord c.p. (percent M.A.C.) = 30.5

*Resultant pressure coefficient.

TABLE 8

TABULATION OF PRESSURE COEFFICIENTS AND AERODYNAMIC CHARACTERISTICS

OF THE X-1 WING; PULL-UP AT $M \approx 0.88$

(a) $M = 0.879$; $C_{N_A} = 0.414$; $\delta_{a_L} = 0.59^{\circ}$ down

Orifice	Pressure coefficients						
	Station A*	Station B*	Station C*	Station D		Station E*	Station F*
				Upper	Lower		
1	-----	-----	-----	0.968	-----	-----	-----
2	1.673	1.434	1.457	-.350	0.769	1.516	1.249
3	1.633	1.354	-----	-.428	.584	1.352	1.031
4	1.445	1.192	1.169	-.683	.387	1.047	-----
5	-----	-----	-----	-----	-----	-----	.729
6	.857	.923	.806	-.798	-----	.752	-----
7	-----	-----	-----	-.854	-.158	.684	.358
8	-----	.724	-----	-.892	-----	.689	-----
9	.693	.682	-----	-.950	-.303	.618	-----
10	.703	.201	.637	-----	-.299	.597	-----
11	.450	.068	.471	-.458	-.442	.579	.265
12	.110	.047	.126	-.442	-.503	-----	.281
13	.035	-.035	.016	-.418	-.587	.052	.241
14	.042	-.089	-----	-.428	-----	.007	.211
15	-.110	-.098	-.103	-.423	-.657	-.026	.150
16	-.035	-.101	-.159	-----	-.660	-.053	.105
17	-----	-----	.000	-----	-.617	------	-.152
18	-.112	-----	-----	-.386	-.311	.295	-----
19	.035	.136	-----	-.386	-----	-----	.178
20	.042	-----	.138	-.386	-----	.185	.035
21	-----	-----	-----	-.353	-----	-----	-----

Integrated section aerodynamic characteristics						
c_n	0.448	0.406	0.437	0.341	0.455	0.307
$c_{m_{c/4}}$	0.020	0.017	0.003	0.023	-0.021	-0.006

Integrated panel aerodynamic characteristics	
$C_N' = 0.402$	
$C_{BM}' = 0.174$	Lateral c.p. (percent panel span) = 43.4
$C_M' = 0.009$	Chord c.p. (percent M.A.C.) = 23.0

*Resultant pressure coefficient.

TABLE 8

TABULATION OF PRESSURE COEFFICIENTS AND AERODYNAMIC CHARACTERISTICS

OF THE X-1 WING; PULL-UP AT $M \approx 0.88$ - Continued

(b) $M = 0.881$; $C_{N_A} = 0.485$; $\delta_{a_L} = 0.30^\circ$ down

Orifice	Pressure coefficients						
	Station A*	Station B*	Station C*	Station D		Station E*	Station F*
				Upper	Lower		
1	-----	-----	-----	0.904	-----	-----	-----
2	1.819	1.579	1.574	-.418	0.816	1.581	1.318
3	1.796	1.467	-----	-.439	.655	1.441	1.131
4	1.609	1.341	-----	-.721	.440	1.234	-----
5	-----	-----	-----	-----	-----	-----	.828
6	.947	.975	.900	-.819	-----	.821	-----
7	-----	-----	-----	-.880	-.115	.767	.366
8	-----	.788	-----	-.910	-----	.739	-----
9	.770	.613	-----	-.857	-.292	.662	-----
10	.767	.296	.683	-----	-.281	.632	-----
11	.317	.173	.630	-.474	-.418	.606	.289
12	.103	.107	.208	-.460	-.490	-----	.308
13	.089	.044	.075	-.448	-.574	.079	.261
14	.079	-.047	-----	-.432	-----	.056	.210
15	-.058	-.026	-.044	-.437	-.621	.030	.156
16	-.030	-.044	-.103	-----	-.630	.000	.138
17	-----	-----	.056	-----	-.591	-----	-.114
18	-.082	-----	-----	-.411	-.299	.294	-----
19	.098	.128	-----	-.406	-----	-----	.173
20	.084	-----	.173	-.406	-----	.201	.040
21	-----	-----	-----	-.360	-----	-----	-----

Integrated section aerodynamic characteristics						
c_n	0.507	0.458	0.517	0.384	0.505	0.337
$c_{m_{c/4}}$	0.016	0.013	-0.012	0.019	-0.027	-0.007

Integrated panel aerodynamic characteristics	
$C_N' = 0.454$	
$C_{BM}' = 0.197$	Lateral c.p. (percent panel span) = 43.3
$C_M' = 0.003$	Chord c.p. (percent M.A.C.) = 24.4

*Resultant pressure coefficient.

TABLE 8

TABULATION OF PRESSURE COEFFICIENTS AND AERODYNAMIC CHARACTERISTICS

OF THE X-1 WING; PULL-UP AT $M \approx 0.88$ - Continued

(c) $M = 0.880$; $C_{N_A} = 0.563$; $\delta_{a_L} = 0.04^{\circ}$ up

Orifice	Pressure coefficients						
	Station A*	Station B*	Station C*	Station D		Station E*	Station F*
				Upper	Lower		
1	-----	-----	-----	0.855	-----	-----	-----
2	1.989	1.746	1.720	-.608	0.880	1.671	1.430
3	1.914	1.636	-----	-.597	.717	1.526	1.215
4	1.806	1.463	-----	-.763	.509	1.330	-----
5	-----	-----	-----	-----	-----	-----	.953
6	1.108	1.103	1.012	-.870	-----	.900	-----
7	-----	-----	-----	-.938	-.080	.813	.402
8	-----	.888	-----	-.896	-----	.797	-----
9	.900	.509	-----	-.699	-.290	.715	-----
10	.860	.318	.750	-----	-.255	.687	-----
11	.449	.245	.645	-.515	-.400	.608	.315
12	.266	.182	.283	-.498	-.489	-----	.337
13	.271	.145	.124	-.473	-.573	.124	.294
14	.182	.026	-----	-.498	-----	.086	.243
15	.112	.093	.063	-.477	-.604	.058	.182
16	.040	.098	.033	-----	-.618	.054	.157
17	-----	-----	.178	-----	-.548	-----	-.070
18	-.082	-----	-----	-.431	-.274	.301	-----
19	.105	.250	-----	-.442	-----	-----	.173
20	.093	-----	.210	-.445	-----	.213	.063
21	-----	-----	-----	-.393	-----	-----	-----

Integrated section aerodynamic characteristics						
c_n	0.621	0.550	0.607	0.421	0.559	0.381
$c_{m_{c/4}}$	0.005	-0.009	-0.028	0.015	-0.031	-0.010

Integrated panel aerodynamic characteristics	
$C_N' = 0.526$	
$C_{BM}' = 0.221$	Lateral c.p. (percent panel span) = 42.1
$C_M' = -0.009$	Chord c.p. (percent M.A.C.) = 26.7

*Resultant pressure coefficient.

TABLE 8

TABULATION OF PRESSURE COEFFICIENTS AND AERODYNAMIC CHARACTERISTICS

OF THE X-1 WING; PULL-UP AT $M \approx 0.88$ - Continued

(d) $M = 0.880$; $C_{N_A} = 0.642$; $\delta_{a_L} = 0.04^{\circ}$ up

Orifice	Pressure coefficients						
	Station A*	Station B*	Station C*	Station D		Station E*	Station F*
				Upper	Lower		
1	-----	-----	-----	0.882	-----	-----	-----
2	2.057	1.823	1.760	-.638	.904	1.697	1.472
3	2.031	1.720	-----	-.615	.743	1.587	1.316
4	1.914	1.573	-----	-.809	.516	1.398	-----
5	-----	-----	-----	-----	-----	-----	.975
6	1.154	1.133	1.068	-.900	-----	.923	-----
7	-----	-----	-----	-.951	-.068	.830	.416
8	-----	.888	-----	-.858	-----	.837	-----
9	.939	.505	-----	-.655	-.276	.774	-----
10	.900	.348	.785	-----	-.246	.715	-----
11	.477	.262	.631	-.512	-.386	.617	.327
12	.318	.222	.308	-.507	-.482	-----	.353
13	.301	.185	.166	-.489	-.566	.157	.301
14	.182	.044	-----	-.463	-----	.131	.248
15	.124	.129	.075	-.484	-.580	.089	.199
16	.047	.180	.056	-----	-.589	.065	.173
17	-----	-----	.210	-----	-.533	-----	-.054
18	-.072	-----	-----	-.456	-.241	.301	-----
19	.112	.257	-----	-.463	-----	-----	.178
20	.093	-----	.231	-.451	-----	.213	.070
21	-----	-----	-----	-.398	-----	-----	-----

Integrated section aerodynamic characteristics						
c_n	0.645	0.587	0.636	0.448	0.579	0.403
$c_{m_{c/4}}$	0.000	-0.016	-0.032	0.011	-0.032	-0.010

Integrated panel aerodynamic characteristics	
$C_N' = 0.555$ $C_{BM}' = 0.233$ $C_M' = -0.014$	Lateral c.p. (percent panel span) = 42.0 Chord c.p. (percnet M.A.C.) = 27.4

*Resultant pressure coefficient.

TABLE 8

TABULATION OF PRESSURE COEFFICIENTS AND AERODYNAMIC CHARACTERISTICS

OF THE X-1 WING; PULL-UP AT $M \approx 0.88$ - Continued

(e) $M = 0.881$; $C_{N_A} = 0.791$; $\delta_{a_L} = 0.20^\circ$ up

Orifice	Pressure coefficients						
	Station A*	Station B*	Station C*	Station D		Station E*	Station F*
				Upper	Lower		
1	-----	-----	-----	0.670	-----	-----	-----
2	2.306	2.062	2.015	-.837	0.992	1.866	1.632
3	2.283	1.980	-----	-.841	.847	1.777	1.539
4	2.113	1.889	-----	-.906	.630	1.595	-----
5	-----	-----	-----	-----	-----	-----	1.161
6	1.392	1.189	1.276	-.998	-----	1.129	-----
7	-----	-----	-----	-.883	.017	.975	.476
8	-----	.753	-----	-.736	-----	.958	-----
9	.814	.441	-----	-.641	-.258	.905	-----
10	.637	.415	.914	-----	-.177	.837	-----
11	.361	.364	.602	-.604	-.331	.616	.403
12	.331	.343	.455	-.592	-.468	-----	.408
13	.322	.338	.285	-.585	-.552	.287	.359
14	.278	.212	-----	-.515	-----	.243	.296
15	.287	.303	.119	-.569	-.487	.191	.252
16	.133	.368	.175	-----	-.515	.152	.252
17	-----	-----	.336	-----	-.396	-----	.054
18	.075	-----	-----	-.529	-.130	.373	-----
19	.273	.401	-----	-.557	-----	-----	.215
20	.194	-----	.264	-.520	-----	.217	.093
21	-----	-----	-----	-.459	-----	-----	-----

Integrated section aerodynamic characteristics						
c_n	0.732	0.692	0.765	0.581	0.690	0.482
$c_{m_{c/4}}$	-0.010	-0.044	-0.049	-0.011	-0.044	-0.021

Integrated panel aerodynamic characteristics	
$C_N' = 0.659$	
$C_{RM}' = 0.280$	Lateral c.p. (percent panel span) = 42.5
$C_M' = -0.032$	Chord c.p. (percent M.A.C.) = 29.8

*Resultant pressure coefficient.

TABLE 8

TABULATION OF PRESSURE COEFFICIENTS AND AERODYNAMIC CHARACTERISTICS

OF THE X-1 WING; PULL-UP AT $M \approx 0.88$ - Concluded

(f) $M = 0.878$; $C_{N_A} = 0.930$; $\delta_{a_L} = 0.36^\circ$ up

Orifice	Pressure coefficients						
	Station A*	Station B*	Station C*	Station D		Station E*	Station F*
				Upper	Lower		
1	-----	-----	-----	0.513	-----	-----	-----
2	2.275	2.353	2.278	-1.051	1.105	2.085	1.867
3	2.261	2.275	-----	-1.053	.973	2.043	1.787
4	2.137	2.167	-----	-1.149	.757	1.867	-----
5	-----	-----	-----	-----	-----	-----	1.390
6	1.444	1.376	1.536	-.990	-----	1.348	-----
7	-----	-----	-----	-.788	.116	1.174	.571
8	-----	.918	-----	-.720	-----	1.146	-----
9	.787	.603	-----	-.708	-.224	1.059	-----
10	.801	.634	.892	-----	-.090	.899	-----
11	.618	.559	.704	-.689	-.220	.690	.498
12	.573	.552	.575	-.673	-.443	-----	.495
13	.556	.549	.453	-.682	-.527	.409	.446
14	.486	.418	-----	-.591	-----	.404	.406
15	.458	.514	.359	-.675	-.308	.362	.322
16	.350	.542	.446	-----	-.360	.352	.361
17	-----	-----	.517	-----	-.266	-----	.235
18	.214	-----	-----	-.630	-.130	.397	-----
19	.453	.538	-----	-.656	-----	-----	.308
20	.352	-----	.376	-.645	-----	.194	.146
21	-----	-----	-----	-.539	-----	-----	-----

Integrated section aerodynamic characteristics						
c_n	0.840	0.881	0.943	0.722	0.830	0.605
$c_{m_{c/4}}$	-0.055	-0.082	-0.080	-0.044	-0.059	-0.042

Integrated panel aerodynamic characteristics	
$C_N' = 0.814$	
$C_{BM}' = 0.344$	Lateral c.p. (percent panel span) = 42.3
$C_M' = -0.063$	Chord c.p. (percent M.A.C.) = 32.7

*Resultant pressure coefficient.

TABLE 9

TABULATION OF PRESSURE COEFFICIENTS AND AERODYNAMIC CHARACTERISTICS

OF THE X-1 WING; PULL-UP AT $M \approx 0.89$

(a) $M = 0.887$; $C_{N_A} = 0.394$; $\delta_{a_L} = 0.68^\circ$ down

Orifice	Pressure coefficients						
	Station A*	Station B*	Station C*	Station D		Station E*	Station F*
				Upper	Lower		
1	-----	-----	-----	1.025	-----	-----	-----
2	1.613	1.333	1.377	-.343	.783	1.401	1.121
3	1.597	1.266	-----	-.410	.620	1.206	.939
4	1.502	1.100	.944	-.581	.446	1.002	-----
5	-----	-----	-----	-----	-----	-----	.685
6	.851	.817	.763	-.755	-----	.682	.330
7	-----	-----	-----	-.892	-.129	.654	.361
8	-----	.721	-----	-.819	-----	.595	.369
9	.675	.687	-----	-.898	-.259	.555	-----
10	.713	.319	.609	-----	-.257	.558	-----
11	.508	.137	.623	-.493	-.399	.563	.238
12	.155	.024	.176	-.420	-.480	-----	.259
13	-.023	-.020	.067	-.409	-.537	.044	.238
14	0	-.125	-----	-.378	-----	-.018	.156
15	-.145	-.163	-.090	-.387	-.625	-.052	.143
16	-.060	-.120	-.130	-----	-.635	-.054	.085
17	-----	-----	.038	-----	-----	-----	-.164
18	-.309	-----	-----	-.343	-.446	.101	-----
19	-.049	-.003	-----	-.384	-----	-----	.119
20	.103	-----	.106	-.358	-----	.166	.041
21	-----	-----	-----	-.309	-----	-----	-----

Integrated section aerodynamic characteristics						
c_n	0.432	0.365	0.424	0.332	0.407	0.277
$c_{m_{c/4}}$	0.030	0.027	-0.001	0.033	-0.013	-0.019

Integrated panel aerodynamic characteristics	
$C_N' = 0.364$	
$C_{BM}' = 0.156$	Lateral c.p. (percent panel span) = 43.0
$C_M' = 0.015$	Chord c.p. (percent M.A.C.) = 20.9

*Resultant pressure coefficient.

TABLE 9

TABULATION OF PRESSURE COEFFICIENTS AND AERODYNAMIC CHARACTERISTICS

OF THE X-1 WING; PULL-UP AT $M \approx 0.89$ - Continued

(b) $M = 0.887$; $C_{N_A} = 0.462$; $\delta_{a_L} = 0.40^\circ$ down

Orifice	Pressure coefficients						
	Station A*	Station B*	Station C*	Station D		Station E*	Station F*
				Upper	Lower		
1	-----	-----	-----	0.975	-----	-----	-----
2	1.771	1.561	1.652	-.406	0.833	1.533	1.289
3	1.742	1.696	-----	-.489	.660	1.386	1.122
4	1.664	1.249	-----	-.677	.514	1.174	-----
5	-----	-----	-----	-----	-----	-----	.804
6	.928	.948	.884	-.789	-----	.788	.484
7	-----	-----	-----	-.807	-.096	.745	.431
8	-----	.923	-----	-.863	-----	.695	.413
9	.771	.592	-----	-.886	-.236	.656	-----
10	.724	.285	.706	-----	-.236	.625	-----
11	.667	.196	.683	-.501	-.377	.597	.277
12	.219	.139	.219	-.457	-.460	-----	.282
13	.060	.077	.078	-.437	-.506	.085	.256
14	.106	-.069	-----	-.415	-----	.042	.170
15	-.002	-.042	-.029	-.435	-.605	.024	.163
16	-.038	-.044	-.163	-----	-.626	.000	.121
17	-----	-----	.206	-----	-----	-----	-.091
18	-.285	-----	-----	-.382	-.429	.101	-----
19	-.010	.044	-----	-.404	-----	-----	.086
20	.103	-----	.124	-.401	-----	.175	.049
21	-----	-----	-----	-.375	-----	-----	-----

Integrated section aerodynamic characteristics						
c_n	0.513	0.445	0.523	0.393	0.470	0.333
$c_{m_{c/4}}$	0.024	0.017	-0.014	0.024	-0.015	-0.024

Integrated panel aerodynamic characteristics	
$C_N' = 0.446$	
$C_{BM}' = 0.191$	Lateral c.p. (percent panel span) = 42.9
$C_M' = 0.006$	Chord c.p. (percent M.A.C.) = 23.7

*Resultant pressure coefficient.

TABLE 9

TABULATION OF PRESSURE COEFFICIENTS AND AERODYNAMIC CHARACTERISTICS

OF THE X-1 WING; PULL-UP AT $M \approx 0.89$ - Continued

(c) $M = 0.884$; $C_{N_A} = 0.602$; $\delta_{a_L} = 0.12^\circ$ down

Orifice	Pressure coefficients						
	Station A*	Station B*	Station C*	Station D		Station E*	Station F*
				Upper	Lower		
1	-----	-----	-----	0.913	-----	-----	-----
2	2.017	1.845	1.796	-.701	0.948	1.731	1.472
3	2.023	1.887	-----	-.669	.740	1.584	1.341
4	1.869	1.555	-----	-.828	.593	1.412	-----
5	-----	-----	-----	-----	-----	-----	1.038
6	1.164	1.139	1.090	-.902	-----	.955	.601
7	-----	-----	-----	.971	-.025	.890	.543
8	-----	.676	-----	-.871	-----	.890	.517
9	.851	.455	-----	-.665	-.178	.792	-----
10	.851	.381	.827	-----	-.208	.759	-----
11	.511	.286	.558	-.521	-.349	.532	.337
12	.260	.211	.316	-.517	-.411	-----	.350
13	.213	.187	.205	-.506	-.455	.165	.327
14	.170	.026	-----	-.519	-----	.133	.239
15	.141	.057	.093	-.504	-.555	.108	.224
16	.036	.154	.157	-----	-.583	.020	.201
17	-----	-----	.380	-----	-----	-----	-.007
18	-.277	-----	-----	-.453	-.393	.110	-----
19	.070	.108	-----	-.483	-----	-----	.070
20	.088	-----	.210	-.468	-----	.216	.065
21	-----	-----	-----	-.427	-----	-----	-----

Integrated section aerodynamic characteristics						
c_n	0.608	0.543	0.671	0.496	0.563	0.423
$c_{m_{c/4}}$	0.015	0.002	-0.046	0.011	-0.018	-0.036

Integrated panel aerodynamic characteristics	
$C_N' = 0.551$	
$C_{BM}' = 0.237$	Lateral c.p. (percent panel span) = 43.1
$C_M' = -0.010$	Chord c.p. (percent M.A.C.) = 26.7

*Resultant pressure coefficient.

TABLE 9

TABULATION OF PRESSURE COEFFICIENTS AND AERODYNAMIC CHARACTERISTICS

OF THE X-1 WING; PULL-UP AT $M \approx 0.89$ - Concluded

(d) $M = 0.877$; $C_{N_A} = 0.658$; $\delta_{a_L} = 0.18^\circ$ up

Orifice	Pressure coefficients						
	Station A*	Station B*	Station C*	Station D		Station E*	Station F*
				Upper	Lower		
1	-----	-----	-----	0.787	-----	-----	-----
2	2.414	1.986	2.103	-.951	0.981	1.909	1.629
3	2.168	1.929	-----	-.930	.792	1.737	1.537
4	2.044	1.727	-----	-1.048	.625	1.629	-----
5	-----	-----	-----	-----	-----	-----	1.260
6	1.341	1.311	1.265	-.940	-----	1.142	.693
7	-----	-----	-----	-.820	.013	1.062	.690
8	-----	.585	-----	-.612	-----	1.031	.620
9	.882	.482	-----	-.585	-.111	.968	-----
10	.636	.411	.958	-----	-.182	.848	-----
11	.303	.345	.573	-.565	-.303	.437	.431
12	.252	.297	.426	-.565	-.366	-----	.457
13	.224	.250	.247	-.564	-.419	.288	.434
14	.215	.146	-----	-.545	-----	.275	.343
15	.199	.282	.094	-.569	-.481	.224	.278
16	.056	.361	.085	-----	-.469	.207	.197
17	-----	-----	.411	-----	-----	-----	.030
18	-.162	-----	-----	-.537	-.212	.149	-----
19	.206	.128	-----	-.564	-----	-----	.103
20	.161	-----	.222	-.535	-----	.219	.083
21	-----	-----	-----	-1.034	-----	-----	-----

Integrated section aerodynamic characteristics						
c_n	0.676	0.621	0.782	0.584	0.680	0.518
$c_{m_{c/4}}$	0.011	-0.016	-0.050	-0.017	-0.034	-0.047

Integrated panel aerodynamic characteristics	
$C_N' = 0.642$	
$C_{BM}' = 0.281$	Lateral c.p. (percent panel span) = 43.8
$C_M' = -0.024$	Chord c.p. (percent M.A.C.) = 28.8

*Resultant pressure coefficient.

TABLE 10

TABULATION OF PRESSURE COEFFICIENTS AND AERODYNAMIC CHARACTERISTICS

OF THE X-1 WING; PULL-UP AT $M \approx 0.96$

(a) $M = 0.965$; $C_{N_A} = 0.247$; $\delta_{a_L} = 0.30^\circ$ up

Orifice	Pressure coefficients						
	Station A*	Station B*	Station C*	Station D		Station E*	Station F*
				Upper	Lower		
1	-----	-----	-----	1.211	-----	-----	-----
2	0.540	0.378	0.394	.171	0.493	0.629	0.385
3	.567	.420	-----	.082	.375	.434	.222
4	.507	.398	.378	-.123	.222	.338	-----
5	-----	-----	-----	-----	-----	-----	.222
6	.260	.342	.338	-.327	-----	.287	.129
7	-----	-----	-----	-.450	-.174	.276	.213
8	-----	.240	-----	-.523	-----	.311	-----
9	.289	.313	-----	-.563	-.316	-----	-----
10	.280	.213	.229	-----	-.329	.258	-----
11	.238	.202	.273	-.636	-.414	.278	.122
12	.222	.245	.282	-.721	-.434	-----	.171
13	.249	.247	.225	-.687	-.503	.273	.153
14	.362	.247	-----	-.767	-----	.258	.120
15	.293	.273	.229	-.776	-.596	.296	.076
16	.207	.256	.213	-----	-.614	.251	.080
17	-----	-----	.331	-----	-.585	-----	.056
18	.153	-----	-----	-.794	-.585	.142	-----
19	.100	.098	-----	-.781	-----	-----	.100
20	.013	-----	.189	-.774	-----	.000	-.080
21	-----	-----	-----	-.703	-----	-----	-----

Integrated section aerodynamic characteristics						
c_n	0.250	0.247	0.274	0.233	0.242	0.130
$c_{m_{c/4}}$	-0.037	-0.038	-0.057	-0.043	-0.037	-0.014

Integrated panel aerodynamic characteristics	
$C_N' = 0.236$	
$C_{BM}' = 0.098$	Lateral c.p. (percent panel span) = 41.8
$C_M' = -0.039$	Chord c.p. (percent M.A.C.) = 41.7

*Resultant pressure coefficient.

TABLE 10

TABULATION OF PRESSURE COEFFICIENTS AND AERODYNAMIC CHARACTERISTICS

OF THE X-1 WING; PULL-UP AT $M \approx 0.96$ - Continued

(b) $M = 0.967$; $C_{N_A} = 0.423$; $\delta_{a_L} = 0.30^\circ$ up

Orifice	Pressure coefficients						
	Station A*	Station B*	Station C*	Station D		Station E*	Station F*
				Upper	Lower		
1	-----	-----	-----	1.121	-----	-----	-----
2	1.173	0.913	0.877	-.008	0.679	0.966	0.729
3	1.193	.862	-----	-.065	.556	.809	.561
4	.975	.824	.672	-.255	.372	.575	-----
5	-----	-----	-----	-----	-----	-----	.362
6	.539	.603	.548	-.428	-----	.453	.210
7	-----	-----	-----	-.518	-.110	.411	.274
8	-----	.480	-----	-.574	-----	.415	-----
9	.482	.438	-----	-.638	-.304	-----	-----
10	.469	.354	.400	-----	-.255	.362	-----
11	.435	.340	.415	-.695	-.350	.380	.157
12	.398	.385	.424	-.773	-.428	-----	.197
13	.360	.373	.338	-.742	-.454	.351	.172
14	.469	.327	-----	-.779	-----	.331	.133
15	.380	.378	.345	-.797	-.552	.362	.088
16	.305	.393	.323	-----	-.585	.290	.106
17	-----	-----	.453	-----	-.545	-----	.088
18	.214	-----	-----	-.826	-.543	.192	-----
19	.172	.254	-----	-.812	-----	-----	.144
20	.088	-----	.274	-.795	-----	.009	-.013
21	-----	-----	-----	-.709	-----	-----	-----

Integrated section aerodynamic characteristics						
c_n	0.433	0.437	0.436	0.358	0.349	0.205
$c_{m_{c/4}}$	-0.050	-0.062	-0.079	-0.054	-0.046	-0.020

Integrated panel aerodynamic characteristics	
$C_N' = 0.378$	
$C_{BM}' = 0.152$	Lateral c.p. (percent panel span) = 40.2
$C_M' = -0.055$	Chord c.p. (percent M.A.C.) = 39.5

*Resultant pressure coefficient.

TABLE 10

TABULATION OF PRESSURE COEFFICIENTS AND AERODYNAMIC CHARACTERISTICS

OF THE X-1 WING; PULL-UP AT $M \approx 0.96$ - Continued

(c) $M = 0.968$; $C_{N_A} = 0.534$; $\delta_{a_L} = 0.36^{\circ}$ up

Orifice	Pressure coefficients						
	Station A*	Station B*	Station C*	Station D		Station E*	Station F*
				Upper	Lower		
1	-----	-----	-----	1.051	-----	-----	-----
2	1.453	1.224	1.180	-.109	0.800	1.164	0.893
3	1.458	1.103	-----	-.170	.648	1.012	.743
4	1.268	1.003	.955	-.362	.467	.800	-----
5	-----	-----	-----	-----	-----	-----	.538
6	.706	.752	.688	-.497	-----	.567	.269
7	-----	-----	-----	-.578	-.047	.523	.287
8	-----	.631	-----	-.618	-----	.501	-----
9	.598	.549	-----	-.682	-.281	-----	-----
10	.609	.483	.496	-----	-.190	.441	-----
11	.545	.450	.518	-.748	-.316	.454	.187
12	.474	.498	.512	-.797	-.413	-----	.221
13	.452	.461	.426	-.779	-.428	.399	.192
14	.551	.410	-----	-.808	-----	.390	.146
15	.454	.461	.415	-.817	-.525	.410	.101
16	.423	.461	.419	-----	-.554	.348	.121
17	-----	-----	.540	-----	-.514	-----	.112
18	.247	-----	-----	-.852	-.519	.236	-----
19	.205	.346	-----	-.850	-----	-----	.163
20	.137	-----	.348	-.814	-----	.029	.029
21	-----	-----	-----	-.717	-----	-----	-----

Integrated section aerodynamic characteristics						
c_n	0.561	0.555	0.554	0.474	0.435	0.247
$c_{m_{c/4}}$	-0.062	-0.080	-0.096	-0.064	-0.052	-0.019

Integrated panel aerodynamic characteristics	
$C_N' = 0.484$	
$C_{BM}' = 0.194$	Lateral c.p. (percent panel span) = 40.1
$C_M' = -0.067$	Chord c.p. (percent M.A.C.) = 38.8

*Resultant pressure coefficient.

NACA

TABLE 10

TABULATION OF PRESSURE COEFFICIENTS AND AERODYNAMIC CHARACTERISTICS

OF THE X-1 WING; PULL-UP AT $M \approx 0.96$ - Continued

(d) $M = 0.968$; $C_{N_A} = 0.590$; $\delta_{a_L} = 0.36^{\circ}$ up

Orifice	Pressure coefficients						
	Station A*	Station B*	Station C*	Station D		Station E*	Station F*
				Upper	Lower		
1	-----	-----	-----	1.027	-----	-----	-----
2	1.590	1.341	1.323	-.206	0.861	1.277	1.080
3	1.537	1.237	-----	-.224	.687	1.135	.860
4	1.424	1.103	1.069	-.411	.513	.908	-----
5	-----	-----	-----	-----	-----	-----	.648
6	.829	.869	.759	-.568	-----	.633	.331
7	-----	-----	-----	-.651	-.023	.584	.324
8	-----	.690	-----	-.654	-----	.568	-----
9	-.695	.624	-----	-.726	-.277	.545	-----
10	.688	.549	.545	-----	-.157	.492	-----
11	.611	.536	.584	-.797	-.283	.487	.214
12	.534	.564	.587	-.848	-.409	-----	.245
13	.507	.527	.474	-.826	-.407	.432	.212
14	.639	.443	-----	-.819	-----	.428	.165
15	.542	.509	.472	-.841	-.495	.450	.123
16	.496	.494	.494	-----	-.530	.379	.146
17	-----	-----	.596	-----	-.484	-----	.130
18	.271	-----	-----	-.870	-.501	.260	-----
19	.227	.448	-----	-.870	-----	-----	.172
20	.198	-----	.406	-.826	-----	.051	.055
21	-----	-----	-----	-.718	-----	-----	-----

Integrated section aerodynamic characteristics						
c_n	0.634	0.640	0.615	0.518	0.484	0.285
$c_{m_{c/4}}$	-0.073	-0.096	-0.108	-0.076	-0.059	-0.020

Integrated panel aerodynamic characteristics	
$C_N' = 0.543$ $C_{BM}' = 0.216$ $C_M' = -0.078$	Lateral c.p. (percent panel span) = 39.7 Chord c.p. (percent M.A.C.) = 39.3

*Resultant pressure coefficient.

TABLE 10

TABULATION OF PRESSURE COEFFICIENTS AND AERODYNAMIC CHARACTERISTICS

OF THE X-1 WING; PULL-UP AT M ≈ 0.96 - Continued

(e) $M = 0.966$; $C_{N_A} = 0.712$; $\delta_{a_L} = 0.36^{\circ}$ up

Orifice	Pressure coefficients						
	Station A*	Station B*	Station C*	Station D		Station E*	Station F*
				Upper	Lower		
1	-----	-----	-----	0.942	-----	-----	-----
2	1.713	1.459	1.470	-.313	0.900	1.370	1.178
3	1.669	1.412	-----	-.364	.746	1.255	1.001
4	1.547	1.271	1.143	-.485	.558	1.034	-----
5	-----	-----	-----	-----	-----	-----	.725
6	.935	.941	.827	-.618	-----	.718	.376
7	-----	-----	-----	-.704	.005	.636	.331
8	-----	.747	-----	-.713	-----	.590	-----
9	.776	.685	-----	-.790	-.267	.610	-----
10	.754	.643	.628	-----	-.147	.535	-----
11	.665	.623	.623	-.821	-.275	.561	.256
12	.594	.659	.623	-.872	-.392	-----	.274
13	.619	.575	.555	-.854	-.388	.466	.232
14	.674	.475	-----	-.850	-----	.466	.199
15	.590	.597	.515	-.863	-.472	.484	.148
16	.566	.566	.524	-----	-.518	.413	.161
17	-----	-----	.667	-----	-.470	-----	.155
18	.285	-----	-----	-.907	-.488	.292	-----
19	.239	.486	-----	-.918	-----	-----	.186
20	.230	-----	.480	-.823	-----	.080	.077
21	-----	-----	-----	-.722	-----	-----	-----

Integrated section aerodynamic characteristics						
c_n	0.717	0.703	0.702	0.588	0.539	0.319
$c_{m_{c/4}}$	-0.084	-0.103	-0.121	-0.083	-0.066	-0.022

Integrated panel aerodynamic characteristics	
$C_N' = 0.608$ $C_{BM}' = 0.242$ $C_M' = -0.086$	Lateral c.p. (percent panel span) = 39.8 Chord c.p. (percent M.A.C.) = 39.1

*Resultant pressure coefficient.

TABLE 10

TABULATION OF PRESSURE COEFFICIENTS AND AERODYNAMIC CHARACTERISTICS

OF THE X-1 WING; PULL-UP AT $M \approx 0.96$ - Continued

(f) $M = 0.967$; $C_{N_A} = 0.788$; $\delta_{a_L} = 0.36^\circ$ up

Orifice	Pressure coefficients						
	Station A*	Station B*	Station C*	Station D		Station E*	Station F*
				Upper	Lower		
1	-----	-----	-----	0.907	-----	-----	-----
2	1.879	1.647	1.614	-.493	0.975	1.510	1.285
3	1.872	1.567	-----	-.484	.807	1.408	1.181
4	1.678	1.419	-----	-.557	.615	1.227	-----
5	-----	-----	-----	-----	-----	-----	.881
6	1.057	1.035	.956	-.678	-----	.841	.400
7	-----	-----	-----	-.740	.61	.742	.369
8	-----	.854	-----	-.747	-----	.724	-----
9	.857	.773	-----	-.813	-.239	.662	-----
10	.841	.740	.709	-----	-.100	.627	-----
11	.731	.717	.711	-.873	-.239	.627	.296
12	.682	.768	.704	-.912	-.365	-----	.313
13	.715	.726	.607	-.888	-.354	.547	.269
14	.764	.563	-----	-.868	-----	.547	.230
15	.689	.678	.611	-.906	-.436	.574	.181
16	.651	.642	.616	-----	-.471	.501	.190
17	-----	-----	.740	-----	-.420	-----	.185
18	.333	-----	-----	-.926	-.438	.336	-----
19	.283	.583	-----	-.939	-----	-----	.230
20	.382	-----	.567	-.824	-----	.106	.108
21	-----	-----	-----	-.718	-----	-----	-----

Integrated section aerodynamic characteristics						
c_n	0.810	0.797	0.790	0.675	0.630	0.376
$c_{m_{c/4}}$	-0.099	-0.122	-0.140	-0.099	-0.076	-0.029

Integrated panel aerodynamic characteristics	
$C_N' = 0.694$	
$C_{BM}' = 0.278$	Lateral c.p. (percent panel span) = 40.0
$C_M' = -0.101$	Chord c.p. (percent M.A.C.) = 39.6

*Resultant pressure coefficient.

TABLE 10

TABULATION OF PRESSURE COEFFICIENTS AND AERODYNAMIC CHARACTERISTICS

OF THE X-1 WING; PULL-UP AT $M \approx 0.96$ - Continued

(g) $M = 0.962$; $C_{N_A} = 0.830$; $\delta_{a_L} = 0.41^{\circ}$ up

Orifice	Pressure coefficients						
	Station A*	Station B*	Station C*	Station D		Station E*	Station F*
				Upper	Lower		
1	-----	-----	-----	0.837	-----	-----	-----
2	2.038	1.797	1.737	-.607	1.006	1.673	1.481
3	1.997	1.724	-----	-.633	.859	1.599	1.355
4	1.846	1.552	-----	-.711	.657	1.421	-----
5	-----	-----	-----	-----	-----	-----	1.085
6	1.199	1.168	1.114	-.791	-----	1.008	.598
7	-----	-----	-----	-.843	.096	.892	.436
8	-----	.970	-----	-.851	-----	.890	-----
9	.956	.972	-----	-.903	-.073	.825	-----
10	.921	.892	.823	-----	-.066	.763	-----
11	.807	.836	.810	-.945	-.213	.730	.378
12	.767	.863	.803	-1.005	-.260	-----	.400
13	.823	.847	.723	-.972	-.300	.692	.358
14	.836	.750	-----	-.974	-----	.685	.311
15	.794	.801	.716	-1.007	-.389	.732	.278
16	.734	.823	.703	-----	-.400	.714	.282
17	-----	-----	.859	-----	-.362	-----	.280
18	.376	-----	-----	-1.009	-.395	.400	-----
19	.316	.641	-----	-.998	-----	-----	.298
20	.423	-----	.685	-.791	-----	.187	.151
21	-----	-----	-----	-.711	-----	-----	-----

Integrated section aerodynamic characteristics						
c_n	0.907	0.929	0.912	0.810	0.775	0.471
$c_{m_{c/4}}$	-0.113	-0.151	-0.166	-0.128	-0.104	-0.044

Integrated panel aerodynamic characteristics	
$C_N' = 0.820$	
$C_{BM}' = 0.334$	Lateral c.p. (percent panel span) = 40.8
$C_M' = -0.126$	Chord c.p. (percent M.A.C.) = 40.3

*Resultant pressure coefficient.

TABLE 10

TABULATION OF PRESSURE COEFFICIENTS AND AERODYNAMIC CHARACTERISTICS

OF THE X-1 WING; PULL-UP AT $M \approx 0.96$ - Continued

(h) $M = 0.959$; $C_{N_A} = 0.902$; $\delta_{a_L} = 0.41^\circ$ up

Orifice	Pressure coefficients						
	Station A*	Station B*	Station C*	Station D		Station E*	Station F*
				Upper	Lower		
1	-----	-----	-----	0.794	-----	-----	-----
2	2.109	1.885	1.846	-.688	1.044	1.746	1.544
3	2.070	1.811	-----	-.697	.888	1.658	1.412
4	1.925	1.634	-----	-.782	.688	1.500	-----
5	-----	-----	-----	-----	-----	-----	1.132
6	1.282	1.222	1.186	-.827	-----	1.074	.618
7	-----	-----	-----	-.876	.118	.936	.463
8	-----	1.027	-----	-.885	-----	.940	-----
9	1.018	1.014	-----	-.939	-.075	.859	-----
10	.969	.940	.862	-----	-.059	.803	-----
11	.855	.873	.862	-.979	-.198	.768	.392
12	.815	.911	.842	-1.039	-.263	-----	.419
13	.891	.889	.772	-1.006	-.292	.730	.380
14	.868	.779	-----	-.992	-----	.734	.325
15	.864	.850	.763	-1.026	-.379	.774	.291
16	.770	.909	.756	-----	-.381	.745	.309
17	-----	-----	.915	-----	-.346	-----	.307
18	.392	-----	-----	-1.030	-.381	.432	-----
19	.338	.683	-----	-1.006	-----	-----	.322
20	.448	-----	.756	-.807	-----	.208	.170
21	-----	-----	-----	-.728	-----	-----	-----

Integrated section aerodynamic characteristics						
c_n	0.957	0.978	0.975	0.856	0.814	0.497
$c_{m_{c/4}}$	-0.119	-0.160	-0.177	-0.137	-0.111	-0.047

Integrated panel aerodynamic characteristics	
$C_N' = 0.866$	
$C_{BM}' = 0.353$	Lateral c.p. (percent panel span) = 40.8
$C_M' = -0.135$	Chord c.p. (percent M.A.C.) = 40.5

*Resultant pressure coefficient.

TABLE 10

TABULATION OF PRESSURE COEFFICIENTS AND AERODYNAMIC CHARACTERISTICS

OF THE X-1 WING; PULL-UP AT $M \approx 0.96$ - Continued

(i) $M = 0.958$; $C_{N_A} = 0.987$; $\delta_{a_L} = 0.59^\circ$ up

Orifice	Pressure coefficients						
	Station A*	Station B*	Station C*	Station D		Station E*	Station F*
				Upper	Lower		
1	-----	-----	-----	0.727	-----	-----	-----
2	2.254	2.018	1.978	-.861	1.097	1.882	1.657
3	2.196	1.940	-----	-.829	.945	1.794	1.545
4	2.041	1.781	-----	-.883	.754	1.619	-----
5	-----	-----	-----	-----	-----	-----	1.265
6	1.433	1.357	1.296	-.890	-----	1.175	.702
7	-----	-----	-----	-.939	.169	1.045	.509
8	-----	1.130	-----	-.926	-----	1.027	-----
9	1.146	1.101	-----	-.993	-.049	.967	-----
10	1.070	1.025	.944	-----	-.029	.875	-----
11	.973	.969	.958	-1.036	-.141	.780	.449
12	.893	.982	.951	-1.089	-.231	-----	.469
13	.985	.991	.843	-1.049	-.242	.807	.428
14	.949	.863	-----	-1.011	-----	.810	.390
15	.971	1.007	.861	-1.063	-.309	.848	.354
16	.816	1.029	.866	-----	-.334	.794	.392
17	-----	-----	1.025	-----	-.282	-----	.372
18	.339	-----	-----	-1.060	-.365	.502	-----
19	.325	.666	-----	-.971	-----	-----	.381
20	.395	-----	.841	-.829	-----	.280	.224
21	-----	-----	-----	-.755	-----	-----	-----

Integrated section aerodynamic characteristics						
c_n	1.037	1.075	1.077	0.968	0.897	0.568
$c_{m_{c/4}}$	-0.122	-0.172	-0.200	-0.151	-0.124	-0.059

Integrated panel aerodynamic characteristics	
$C_N' = 0.958$	
$C_{BM}' = 0.394$	Lateral c.p. (percent panel span) = 41.1
$C_M' = -0.148$	Chord c.p. (percent M.A.C.) = 40.4

*Resultant pressure coefficient.

TABLE 10

TABULATION OF PRESSURE COEFFICIENTS AND AERODYNAMIC CHARACTERISTICS

OF THE X-1 WING; PULL-UP AT $M \approx 0.96$ - Concluded

(j) $M = 0.940$; $C_{N_A} = 1.075$; $\delta_{a_L} = 0.36^{\circ}$ up

Orifice	Pressure coefficients						
	Station A*	Station B*	Station C*	Station D		Station E*	Station F*
				Upper	Lower		
1	-----	-----	-----	0.450	-----	-----	-----
2	2.535	2.376	2.353	-1.162	1.191	2.297	2.097
3	2.512	2.328	-----	-1.125	1.072	2.192	1.980
4	2.365	2.150	-----	-1.278	.877	2.018	-----
5	-----	-----	-----	-----	-----	-----	1.629
6	1.750	1.673	1.664	-1.127	-----	1.538	1.051
7	-----	-----	-----	-1.150	.304	1.422	.664
8	-----	1.396	-----	-1.136	-----	1.363	-----
9	1.097	1.181	-----	-1.183	.094	1.293	-----
10	1.039	.920	1.170	-----	.082	1.209	-----
11	.881	.853	.953	-1.092	-.009	1.181	.599
12	.750	.818	.874	-.980	-.079	-----	.711
13	.801	.811	.799	-.922	-.067	1.123	.690
14	.729	.918	-----	-.978	-----	1.046	.685
15	.708	.785	.811	-.952	-.104	.925	.669
16	.631	.783	.855	-----	-.102	1.007	.746
17	-----	-----	.927	-----	-.113	-----	.776
18	.363	-----	-----	-.873	-.200	.543	-----
19	.559	.601	-----	-.822	-----	-----	.676
20	.459	-----	.781	-.840	-----	.524	.466
21	-----	-----	-----	-.822	-----	-----	-----

Integrated section aerodynamic characteristics						
c_n	1.088	1.124	1.213	1.178	1.175	0.848
$c_{m_{c/4}}$	-0.099	-0.134	-0.178	-0.163	-0.167	-0.125

Integrated panel aerodynamic characteristics	
$C_N' = 1.113$	
$C_{BM}' = 0.486$	Lateral c.p. (percent panel span) = 43.7
$C_M' = -0.145$	Chord c.p. (percent M.A.C.) = 38.0

*Resultant pressure coefficient.

TABLE 11

TABULATION OF PRESSURE COEFFICIENTS AND AERODYNAMIC CHARACTERISTICS

OF THE X-1 WING; PULL-UP AT $M \approx 0.99$

(a) $M = 1.018$; $C_{N_A} = 0.317$; $\delta_{a_L} = 1.00^{\circ}$ down

Orifice	Pressure coefficients						
	Station A*	Station B*	Station C*	Station D		Station E*	Station F*
				Upper	Lower		
1	-----	-----	-----	1.194	-----	-----	-----
2	0.867	0.705	0.644	0.097	0.774	0.885	0.508
3	.917	.627	-----	.030	.541	.671	.413
4	.738	.593	.533	-.104	.400	.497	-----
5	-----	-----	-----	-----	-----	-----	.290
6	.375	.480	.457	-.311	-----	.377	.185
7	-----	-----	-----	-.407	-.048	.375	.297
8	-----	.330	-----	-.470	-----	.379	.243
9	.357	.359	-----	-.538	-.189	.315	-----
10	.368	.283	.335	-----	-.188	.346	-----
11	.319	.259	.359	-.586	-.255	.323	.150
12	.283	.296	.368	-.655	-.316	-----	.179
13	.243	.296	.315	-.626	-.362	.332	.158
14	.397	.310	-----	-.701	-----	.305	.109
15	.339	.312	.286	-.703	-.461	.354	.089
16	.257	.317	.248	-----	-.465	.299	.091
17	-----	-----	.377	-----	-.449	-----	.082
18	.221	-----	-----	-.757	-.392	.270	-----
19	.174	.212	-----	-.782	-----	-----	.161
20	.105	-----	.277	-.726	-----	.189	.018
21	-----	-----	-----	-.683	-----	-----	-----

Integrated section aerodynamic characteristics						
c_n	0.336	0.344	0.368	0.365	0.341	0.178
$c_{m_{c/4}}$	-0.047	-0.051	-0.071	-0.059	-0.060	-0.020

Integrated panel aerodynamic characteristics	
$C_N' = 0.331$	
$C_{BM}' = 0.140$	Lateral c.p. (percent panel span) = 42.4
$C_M' = -0.054$	Chord c.p. (percent M.A.C.) = 41.3

*Resultant pressure coefficient.

TABLE 11

TABULATION OF PRESSURE COEFFICIENTS AND AERODYNAMIC CHARACTERISTICS

OF THE X-1 WING; PULL-UP AT M ≈ 0.99 - Continued

(b) M = 1.017; C_{N_A} = 0.427; δ_{a_L} = 0.89° down

Orifice	Pressure coefficients						
	Station A*	Station B*	Station C*	Station D		Station E*	Station F*
				Upper	Lower		
1	-----	-----	-----	1.141	-----	-----	-----
2	1.195	0.917	0.975	-.016	0.792	1.074	0.776
3	1.191	.870	-----	-.081	.638	.897	.581
4	1.056	.809	.703	-.200	.498	.666	-----
5	-----	-----	-----	-----	-----	-----	.433
6	.565	.650	.542	-.372	-----	.478	.229
7	-----	-----	-----	-.458	-.007	.478	.321
8	-----	.466	-----	-.509	-----	.458	.289
9	.478	.477	-----	-.567	-.146	.388	-----
10	.448	.370	.430	-----	-.141	.397	-----
11	.424	.352	.433	-.635	-.191	.390	.177
12	.352	.388	.438	-.688	-.291	-----	.200
13	.323	.374	.397	-.646	-.336	.372	.177
14	.457	.363	-----	-.704	-----	.350	.119
15	.384	.384	.370	-.735	-.422	.404	.105
16	.321	.403	.354	-----	-.437	.361	.108
17	-----	-----	.464	-----	-.399	-----	.105
18	.247	-----	-----	-.774	-.350	.292	-----
19	.200	.294	-----	-.792	-----	-----	.184
20	.155	-----	.337	-.756	-----	.191	.063
21	-----	-----	-----	-.686	-----	-----	-----

Integrated section aerodynamic characteristics						
c_n	0.452	0.458	0.472	0.441	0.412	0.223
$c_{m_{c/4}}$	-0.056	-0.069	-0.091	-0.077	-0.066	-0.022

Integrated panel aerodynamic characteristics	
$C_N{}' = 0.417$	
$C_{BM}{}' = 0.173$	Lateral c.p. (percent panel span) = 41.4
$C_M{}' = -0.067$	Chord c.p. (percent M.A.C.) = 41.1

*Resultant pressure coefficient.

TABLE 11

TABULATION OF PRESSURE COEFFICIENTS AND AERODYNAMIC CHARACTERISTICS

OF THE X-1 WING; PULL-UP AT $M \approx 0.99$ - Continued

(c) $M = 1.013$; $C_{N_A} = 0.486$; $\delta_{a_L} = 0.82^{\circ}$ down

Orifice	Pressure coefficients						
	Station A*	Station B*	Station C*	Station D		Station E*	Station F*
				Upper	Lower		
1	-----	-----	-----	1.086	-----	-----	-----
2	1.403	1.208	1.161	-.109	0.842	1.229	.965
3	1.378	1.116	-----	-.159	.678	1.062	.762
4	1.177	.931	.902	-.310	.543	.896	-----
5	-----	-----	-----	-----	-----	-----	.603
6	.668	.724	.636	-.443	-----	.572	.328
7	-----	-----	-----	-.534	.034	.561	.362
8	-----	.570	-----	-.595	-----	.559	.324
9	.549	.634	-----	-.615	-.109	.481	-----
10	.540	.487	.511	-----	-.091	.443	-----
11	.498	.438	.532	-.684	-.172	.465	.210
12	.426	.449	.527	-.751	-.253	-----	.234
13	.380	.429	.476	-.708	-.402	.450	.206
14	.507	.431	-----	-.746	-----	.431	.152
15	.435	.427	.424	-.766	-.395	.471	.118
16	.398	.455	.409	-----	-.418	.429	.134
17	-----	-----	.541	-----	-.380	-----	.136
18	.272	-----	-----	-.805	-.344	.317	-----
19	.234	.369	-----	-.831	-----	-----	.192
20	.199	-----	.455	-.778	-----	.168	.080
21	-----	-----	-----	-.681	-----	-----	-----

Integrated section aerodynamic characteristics						
c_n	0.525	0.553	0.558	0.520	0.486	0.283
$c_{m_{c/4}}$	-0.066	-0.086	-0.107	-0.086	-0.073	-0.025

Integrated panel aerodynamic characteristics	
$C_N' = 0.501$	
$C_{BM}' = 0.209$	Lateral c.p. (percent panel span) = 41.6
$C_M' = -0.079$	Chord c.p. (percent M.A.C.) = 40.8

*Resultant pressure coefficient.

TABLE 11

TABULATION OF PRESSURE COEFFICIENTS AND AERODYNAMIC CHARACTERISTICS

OF THE X-1 WING; PULL-UP AT $M \approx 0.99$ - Continued

(d) $M = 1.013$; $C_{N_A} = 0.595$; $\delta_{a_L} = 0.74^{\circ}$ down

Orifice	Pressure coefficients						
	Station A*	Station B*	Station C*	Station D		Station E*	Station F*
				Upper	Lower		
1	-----	-----	-----	1.037	-----	-----	-----
2	1.598	1.379	1.345	-.174	0.917	1.363	1.104
3	1.573	1.250	-----	-.214	.767	1.250	.944
4	1.421	1.120	-----	-.366	.603	1.055	-----
5	-----	-----	-----	-----	-----	-----	.748
6	.825	.861	.790	-.526	-----	.681	.451
7	-----	-----	-----	-.582	.072	.645	.426
8	-----	.736	-----	-.614	-----	.654	.373
9	.649	.716	-----	-.672	-.051	.554	-----
10	.651	.609	.587	-----	-.045	.538	-----
11	.587	.558	.605	-.721	-.156	.540	.254
12	.511	.587	.663	-.792	-.237	-----	.266
13	.458	.542	.529	-.772	-.290	.507	.221
14	.614	.473	-----	-.782	-----	.477	.174
15	.536	.489	.520	-.781	-.355	.529	.138
16	.562	.509	.487	-----	-.364	.509	.150
17	-----	-----	.642	-----	-.362	-----	.152
18	.308	-----	-----	-.830	-.330	.350	-----
19	.254	.527	-----	-.866	-----	-----	.201
20	.304	-----	.518	-.786	-----	.169	.105
21	-----	-----	-----	-.676	-----	-----	-----

Integrated section aerodynamic characteristics						
c_n	0.643	0.667	0.663	0.599	0.559	0.333
$c_{m_{c/4}}$	-0.084	-0.110	-0.122	-0.100	-0.082	-0.025

Integrated panel aerodynamic characteristics	
$C_N' = 0.588$	
$C_{BM}' = 0.242$	Lateral c.p. (percent panel span) = 41.1
$C_M' = -0.094$	Chord c.p. (percent M.A.C.) = 41.0

*Resultant pressure coefficient.

TABLE 11

TABULATION OF PRESSURE COEFFICIENTS AND AERODYNAMIC CHARACTERISTICS

OF THE X-1 WING; PULL-UP AT $M \approx 0.99$ - Continued

(e) $M = 1.007$; $C_{N_A} = 0.699$; $\delta_{a_L} = 0.61^\circ$ down

Orifice	Pressure coefficients						
	Station A*	Station B*	Station C*	Station D		Station E*	Station F*
				Upper	Lower		
1	-----	-----	-----	0.920	-----	-----	-----
2	1.826	1.625	1.581	-.515	0.979	1.551	1.316
3	1.809	1.461	-----	-.493	.826	1.431	1.221
4	1.663	1.357	-----	-.513	.661	1.301	-----
5	-----	-----	-----	-----	-----	-----	.968
6	1.052	1.028	.975	-.650	-----	.881	.571
7	-----	-----	-----	-.736	.148	.808	.562
8	-----	.836	-----	-.734	-----	.819	.487
9	.776	.886	-----	-.785	.005	.746	-----
10	.758	.758	.739	-----	-.007	.699	-----
11	.657	.738	.730	-.822	-.117	.655	.365
12	.630	.756	.719	-.891	-.186	-----	.345
13	.634	.758	.666	-.853	-.241	.635	.309
14	.747	.638	-----	-.869	-----	.615	.267
15	.705	.634	.661	-.884	-.320	.670	.250
16	.639	.641	.619	-----	-.312	.646	.241
17	-----	-----	.758	-----	-.301	-----	.225
18	.354	-----	-----	-.928	-.298	.445	-----
19	.318	.606	-----	-.928	-----	-----	.237
20	.438	-----	.646	-.818	-----	.232	.124
21	-----	-----	-----	-.685	-----	-----	-----

Integrated section aerodynamic characteristics						
c_n	0.792	0.812	0.816	0.761	0.714	0.450
$c_{m_{c/4}}$	-0.102	-0.135	-0.152	-0.129	-0.105	-0.038

Integrated panel aerodynamic characteristics	
$C_N' = 0.739$	
$C_{BM}' = 0.308$	Lateral c.p. (percent panel span) = 41.7
$C_M' = -0.120$	Chord c.p. (percent M.A.C.) = 41.2

*Resultant pressure coefficient.

TABLE 11

TABULATION OF PRESSURE COEFFICIENTS AND AERODYNAMIC CHARACTERISTICS

OF THE X-1 WING; PULL-UP AT $M \approx 0.99$ - Continued

(f) $M = 0.998$; $C_{N_A} = 0.820$; $\delta_{a_L} = 0.61^{\circ}$ down

Orifice	Pressure coefficients						
	Station A*	Station B*	Station C*	Station D		Station E*	Station F*
				Upper	Lower		
1	-----	-----	-----	0.865	-----	-----	-----
2	1.997	1.761	1.750	-.624	1.049	1.658	1.422
3	1.967	1.678	-----	-.609	.891	1.556	1.344
4	1.826	1.524	-----	-.663	.739	1.417	-----
5	-----	-----	-----	-----	-----	-----	1.073
6	1.199	1.149	1.099	-.728	-----	.977	.661
7	-----	-----	-----	-.802	.173	.911	.631
8	-----	.963	-----	-.798	-----	.911	.546
9	.924	.968	-----	-.839	.032	.835	-----
10	.893	.883	.804	-----	.004	.773	-----
11	.795	.828	.833	-.882	-.108	.730	.393
12	.728	.878	.804	-.930	-.165	-----	.386
13	.770	.865	.744	-.913	-.213	.703	.347
14	.815	.720	-----	-.913	-----	.683	.304
15	.804	.779	.718	-.917	-.306	.742	.278
16	.728	.815	.689	-----	-.293	.703	.288
17	-----	-----	.854	-----	-.269	-----	.284
18	.390	-----	-----	-.960	-.273	.486	-----
19	.351	.670	-----	-.993	-----	-----	.308
20	.529	-----	.741	-.805	-----	.267	.173
21	-----	-----	-----	-.694	-----	-----	-----

Integrated section aerodynamic characteristics						
c_n	0.901	0.925	0.925	0.857	0.788	0.505
$c_{m_{c/4}}$	-0.118	-0.157	-0.174	-0.139	-0.114	-0.048

Integrated panel aerodynamic characteristics	
$C_N' = 0.830$	
$C_{BM}' = 0.342$	Lateral c.p. (percent panel span) = 41.1
$C_M' = -0.137$	Chord c.p. (percent M.A.C.) = 41.5

*Resultant pressure coefficient.

TABLE 11

TABULATION OF PRESSURE COEFFICIENTS AND AERODYNAMIC CHARACTERISTICS

OF THE X-1 WING; PULL-UP AT $M \approx 0.99$ - Continued

(g) $M = 0.988$; $C_{N_A} = 0.906$; $\delta_{a_L} = 0.48^{\circ}$ down

Orifice	Pressure coefficients						
	Station A*	Station B*	Station C*	Station D		Station E*	Station F*
				Upper	Lower		
1	-----	-----	-----	0.752	-----	-----	-----
2	2.153	1.933	1.918	-.782	1.081	1.823	1.564
3	2.140	1.875	-----	-.767	.938	1.709	1.517
4	1.975	1.697	-----	-.841	.782	1.560	-----
5	-----	-----	-----	-----	-----	-----	1.201
6	1.346	1.301	1.231	-.824	-----	1.140	.773
7	-----	-----	-----	-.888	.204	1.043	.729
8	-----	1.072	-----	-.826	-----	1.020	.638
9	1.017	1.091	-----	-.916	.074	.958	-----
10	.985	1.011	.922	-----	.021	.892	-----
11	.894	.937	.933	-.941	-.081	.848	.458
12	.827	.945	.911	-1.002	-.140	-----	.464
13	.879	.971	.843	-.987	-.189	.812	.415
14	.901	.833	-----	-.951	-----	.801	.392
15	.905	.937	.829	-.990	-.271	.829	.364
16	.793	1.022	.807	-----	-.258	.801	.375
17	-----	-----	.981	-----	-.210	-----	.383
18	.430	-----	-----	-1.011	-.240	.574	.244
19	.426	.731	-----	-1.047	-----	-----	.369
20	.621	-----	.886	-.820	-----	.345	.231
21	-----	-----	-----	-.750	-----	-----	-----

Integrated section aerodynamic characteristics						
c_n	1.003	1.052	1.037	0.947	0.909	0.607
$c_{m_{c/4}}$	-0.132	-0.179	-0.198	-0.157	-0.138	-0.065

Integrated panel aerodynamic characteristics	
$C_N' = 0.935$	
$C_{BM}' = 0.384$	Lateral c.p. (percent panel span) = 41.1
$C_M' = -0.155$	Chord c.p. (percent M.A.C.) = 41.6

*Resultant pressure coefficient.

[redacted]

TABLE 11

TABULATION OF PRESSURE COEFFICIENTS AND AERODYNAMIC CHARACTERISTICS

OF THE X-1 WING; PULL-UP AT $M \approx 0.99$ - Continued

(h) $M = 0.977$; $C_{N_A} = 1.012$; $\delta_{a_L} = 0.48^\circ$ down

Orifice	Pressure coefficients						
	Station A*	Station B*	Station C*	Station D		Station E*	Station F*
				Upper	Lower		
1	-----	-----	-----	0.666	-----	-----	-----
2	2.305	2.105	2.061	-.895	1.127	2.000	1.741
3	2.274	2.036	-----	-.879	.980	1.855	1.610
4	2.140	1.873	-----	-.968	.821	1.713	-----
5	-----	-----	-----	-----	-----	-----	1.327
6	1.518	1.429	1.391	-.904	-----	1.258	.895
7	-----	-----	-----	-.990	.242	1.154	.833
8	-----	1.209	-----	-.949	-----	1.121	.711
9	1.185	1.172	-----	-.996	.097	1.049	-----
10	1.098	1.108	1.027	-----	.043	.978	-----
11	1.013	1.040	1.052	-1.040	-.050	.933	.517
12	.949	1.040	1.005	-1.090	-.112	-----	.511
13	1.005	1.088	.955	-1.050	-.172	.904	.484
14	.943	.951	-----	-1.001	-----	.906	.436
15	.970	1.046	.959	-1.048	-.230	.912	.420
16	.837	1.083	.966	-----	-.201	.889	.461
17	-----	-----	1.120	-----	-.194	-----	.457
18	.451	-----	-----	-1.079	-.215	.633	-----
19	.699	.688	-----	-1.116	-----	-----	.434
20	.722	-----	.928	-.846	-----	.408	.273
21	-----	-----	-----	-.796	-----	-----	-----

Integrated section aerodynamic characteristics						
c_n	1.125	1.136	1.165	1.072	1.002	0.679
$c_{m_{c/4}}$	-0.156	-0.187	-0.223	-0.175	-0.152	-0.077

Integrated panel aerodynamic characteristics	
$C_N' = 1.043$	
$C_{BM}' = 0.436$	Lateral c.p. (percent panel span) = 41.8
$C_M' = -0.171$	Chord c.p. (percent M.A.C.) = 41.4

*Resultant pressure coefficient.

[redacted]

TABLE 11

TABULATION OF PRESSURE COEFFICIENTS AND AERODYNAMIC CHARACTERISTICS

OF THE X-1 WING; PULL-UP AT $M \approx 0.99$ - Continued

(i) $M = 0.970$; $C_{N_A} = 1.149$; $\delta_{a_L} = 0.48^\circ$ down

Orifice	Pressure coefficients						
	Station A*	Station B*	Station C*	Station D		Station E*	Station F*
				Upper	Lower		
1	-----	-----	-----	0.582	-----	-----	-----
2	2.442	2.271	2.194	-.985	1.197	2.123	1.860
3	2.410	2.241	-----	-.971	1.031	1.992	1.783
4	2.271	2.064	-----	-1.075	.893	1.834	-----
5	-----	-----	-----	-----	-----	-----	1.451
6	1.638	1.573	1.482	-.981	-----	1.376	.999
7	-----	-----	-----	-1.054	.291	1.260	.922
8	-----	1.343	-----	-1.005	-----	1.231	.794
9	1.331	1.248	-----	-1.034	.134	1.148	-----
10	1.248	1.211	1.148	-----	.098	1.073	-----
11	1.168	1.150	1.117	-1.111	.004	1.026	.598
12	1.107	1.138	1.062	-1.146	-.081	-----	.568
13	1.138	1.149	1.042	-1.107	-.128	1.006	.553
14	1.009	1.073	-----	-1.032	-----	.969	.513
15	1.050	1.170	1.081	-1.081	-.128	.993	.499
16	.918	1.170	1.120	-----	-.144	1.024	.547
17	-----	-----	1.225	-----	-.110	-----	.543
18	.551	-----	-----	-1.129	-.140	.690	-----
19	.810	.710	-----	-1.062	-----	-----	.497
20	.775	-----	.954	-.885	-----	.454	.354
21	-----	-----	-----	-.841	-----	-----	-----

Integrated section aerodynamic characteristics						
c_n	1.239	1.240	1.258	1.185	1.094	0.763
$c_{m_{c/4}}$	-0.178	-0.200	-0.242	-0.198	-0.170	-0.092

Integrated panel aerodynamic characteristics	
$C_N' = 1.140$	
$C_{BM}' = 0.476$	Lateral c.p. (percent panel span) = 41.8
$C_M' = -0.188$	Chord c.p. (percent M.A.C.) = 41.5

*Resultant pressure coefficient.

NACA

[redacted]

TABLE 11

TABULATION OF PRESSURE COEFFICIENTS AND AERODYNAMIC CHARACTERISTICS

OF THE X-1 WING; PULL-UP AT $M \approx 0.99$ - Continued

(j) $M = 0.965$; $C_{N_A} = 1.240$; $\delta_{a_L} = 0.40^\circ$ down

Orifice	Pressure coefficients						
	Station A*	Station B*	Station C*	Station D		Station E*	Station F*
				Upper	Lower		
1	-----	-----	-----	0.417	-----	-----	-----
2	2.469	2.381	2.180	-1.077	1.214	2.194	2.004
3	2.494	2.369	-----	-1.077	1.067	2.126	1.924
4	2.365	2.228	-----	-1.197	.966	1.935	-----
5	-----	-----	-----	-----	-----	-----	1.578
6	1.740	1.678	1.650	-1.051	-----	1.496	1.121
7	-----	-----	-----	-1.107	.362	1.385	1.030
8	-----	1.491	-----	-1.061	-----	1.325	.906
9	1.264	1.348	-----	-1.097	.187	1.232	-----
10	1.389	1.326	1.282	-----	.147	1.166	-----
11	1.457	1.258	1.220	-1.183	.062	1.158	.692
12	1.212	1.302	1.231	-1.181	-.014	-----	.648
13	1.242	1.171	1.171	-1.143	-.046	1.093	.644
14	1.109	1.123	-----	-1.081	-----	1.081	.614
15	1.153	1.193	1.160	-1.135	-.078	1.127	.602
16	1.034	1.183	1.150	-----	-.062	1.143	.676
17	-----	-----	1.265	-----	-.056	-----	.684
18	.578	-----	-----	-1.171	-.137	.757	-----
19	.787	.815	-----	-1.038	-----	-----	.600
20	.769	-----	1.000	-.922	-----	.469	.404
21	-----	-----	-----	-.869	-----	-----	-----

Integrated section aerodynamic characteristics						
c_n	1.316	1.330	1.370	1.305	1.182	.879
$c_{m_{c/4}}$	-0.191	-0.216	-0.262	-0.218	-0.189	-0.116

Integrated panel aerodynamic characteristics	
$C_N' = 1.238$	
$C_{BM}' = 0.520$	Lateral c.p. (percent panel span) = 42.0
$C_M' = -0.207$	Chord c.p. (percent M.A.C.) = 41.7

*Resultant pressure coefficient.

TABLE 11

TABULATION OF PRESSURE COEFFICIENTS AND AERODYNAMIC CHARACTERISTICS

OF THE X-1 WING; PULL-UP AT $M \approx 0.99$ - Concluded

(k) $M = 0.947$; $C_{N_A} = 1.273$; $\delta_{a_L} = 0.41^{\circ}$ down

Orifice	Pressure coefficients						
	Station A*	Station B*	Station C*	Station D		Station E*	Station F*
				Upper	Lower		
1	-----	-----	-----	0.229	-----	-----	-----
2	2.656	2.558	2.672	-1.231	1.216	2.401	2.201
3	2.643	2.480	-----	-1.235	1.131	2.285	2.089
4	2.511	2.345	-----	-1.378	.994	2.165	-----
5	-----	-----	-----	-----	-----	-----	1.760
6	1.936	1.849	1.841	-1.184	-----	1.688	1.313
7	-----	-----	-----	-1.206	.403	1.555	1.220
8	-----	1.613	-----	-1.190	-----	1.493	1.038
9	1.593	1.547	-----	-1.213	.243	1.419	-----
10	1.586	1.489	1.431	-----	.192	1.338	-----
11	1.336	1.365	1.415	-1.266	.115	1.317	.848
12	1.208	1.208	1.371	-1.289	.063	-----	.819
13	1.212	1.195	1.336	-1.264	.018	1.276	.815
14	1.158	1.171	-----	-1.163	-----	1.281	.827
15	1.142	1.146	1.307	-1.233	-.019	1.299	.819
16	1.067	1.146	1.224	-----	-.015	1.278	.898
17	-----	-----	-----	-----	-.040	-----	.873
18	.674	-----	-----	-1.206	-.100	.815	-----
19	.887	.922	-----	-1.086	-----	-----	.699
20	.877	-----	1.084	-1.000	-----	.587	.503
21	-----	-----	-----	-.956	-----	-----	-----

Integrated section aerodynamic characteristics						
c_n	1.433	1.421	1.525	1.441	1.342	1.036
$c_{m_{c/4}}$	-0.205	-0.219	-0.270	-0.240	-0.215	-0.151

Integrated panel aerodynamic characteristics	
$C_N' = 1.362$	
$C_{BM}' = 0.582$	Lateral c.p. (percent panel span) = 42.8
$C_M' = -0.221$	Chord c.p. (percent M.A.C.) = 41.2

*Resultant pressure coefficient.

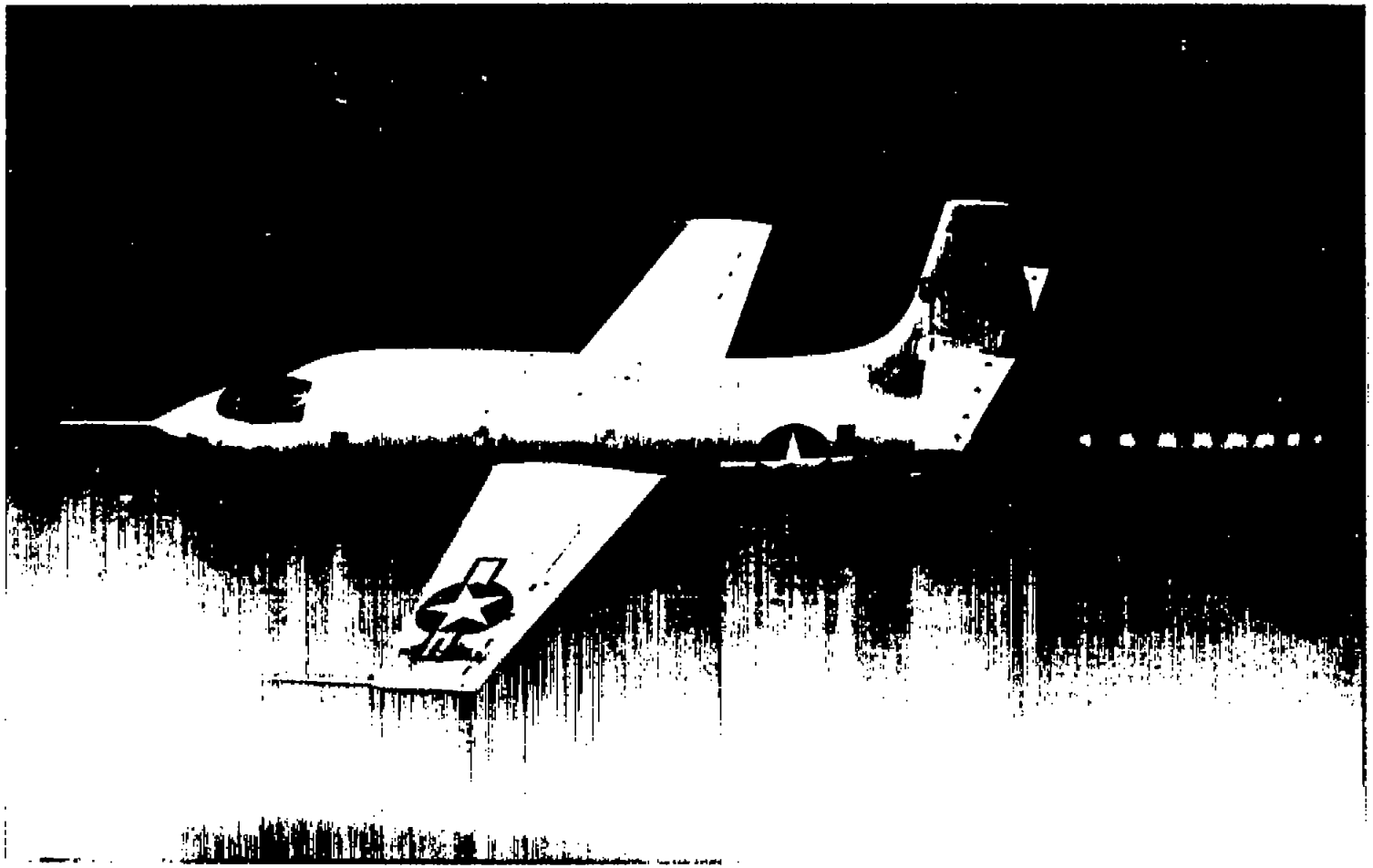

Figure 1.- Photo of X-1 in flight.

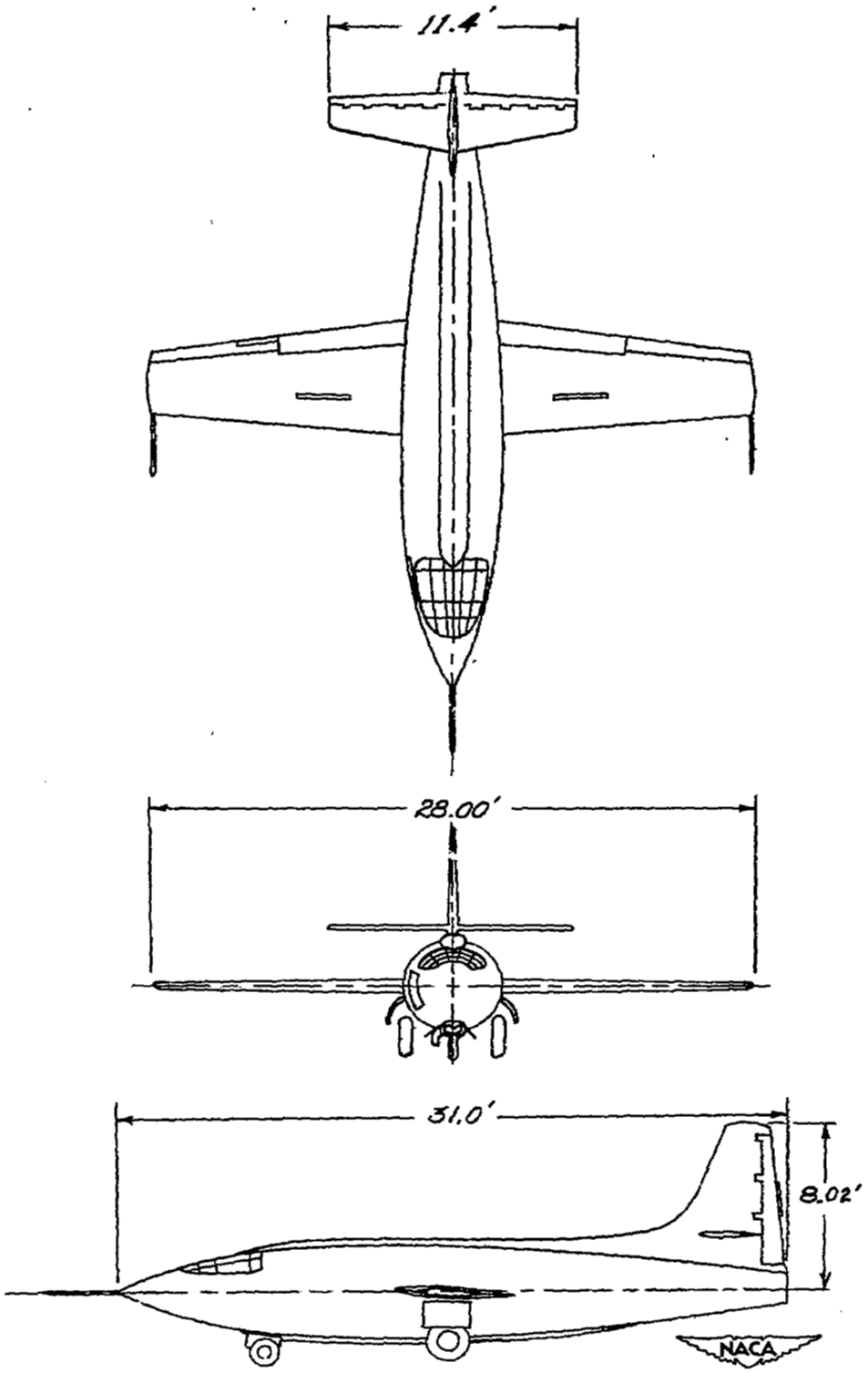

Figure 2.- Three-view sketch of X-1 airplane.

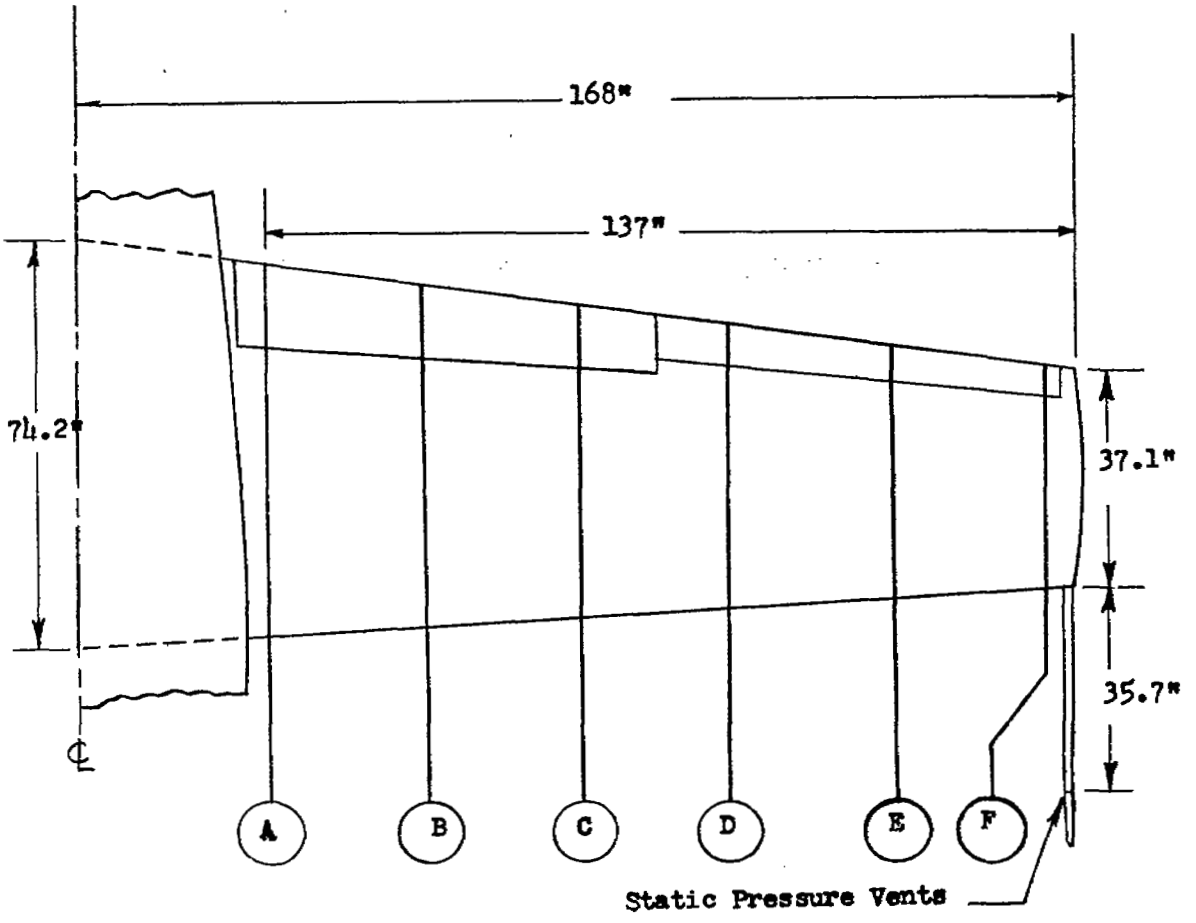

Span Station	A	B	C	D	E	F
Distance from airplane ℄, percent b/2	18.5	33.8	49.1	64.4	79.8	95.1
Distance from Station A, percent b'/2	0	18.8	37.6	56.4	75.2	94.0

(a) Spanwise.

Figure 3.- Spanwise and chordwise locations of pressure measuring orifices.

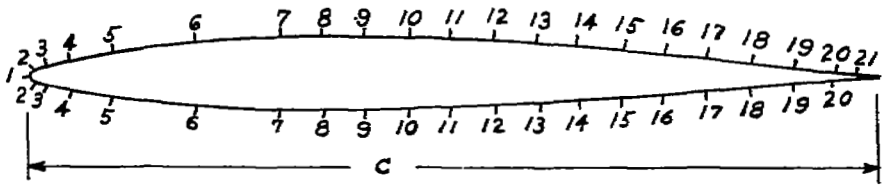

Orifice station location, percent chord												
Chord Station	A		B		C		D		E		F	
Orifice	Upper	Lower	Upper	Lower	Upper	Lower	Upper	Lower	Upper	Lower	Upper	Lower
1	0		0		0		0		0		0	
2	1.16	1.16	1.43	1.26	1.18	1.28	1.29	1.38	1.17	1.17	1.16	1.23
3	2.40	2.40	2.72	2.59	2.40	2.40	2.66	2.66	2.27	2.27	2.64	2.39
4	4.79	4.79	5.21	5.06	5.04	5.04	5.16	5.16	4.90	4.90	5.49	5.03
5	9.85	9.98	10.45	10.45	9.64	9.64	10.95	10.95	8.91	8.91	10.42	10.16
6	19.75	19.92	20.00	20.00	20.00	20.00	19.76	20.10	20.00	19.90	19.92	19.66
7	29.80	30.00	29.40	30.00	29.32	30.00	30.00	30.00	30.00	30.00	29.75	29.62
8	34.85	35.05	34.45	35.20	34.78	35.20	34.80	35.10	35.00	34.92	35.05	35.05
9	40.00	40.10	39.90	40.00	39.58	40.00	40.00	40.15	40.00	40.00	40.07	40.07
10	45.10	45.00	45.17	45.38	44.40	45.92	45.15	45.35	45.15	44.52	45.00	45.00
11	50.20	49.70	50.10	49.95	49.52	50.18	50.18	50.30	50.08	49.90	50.02	50.00
12	54.90	54.90	55.00	54.92	55.10	55.20	55.28	55.28	55.50	54.90	55.05	54.95
13	60.38	60.00	61.08	59.82	59.90	60.00	60.80	60.60	59.50	60.50	59.70	60.00
14	65.00	65.00	65.20	65.00	65.00	65.00	65.40	65.60	64.95	65.00	64.95	64.95
15	70.00	70.00	70.15	70.15	70.00	70.00	69.85	69.95	69.90	70.00	70.05	70.05
16	74.10	74.42	74.00	74.00	74.00	74.38	74.40	74.20	73.70	74.60	73.85	74.30
17	78.60	78.60	78.60	78.60	78.00	78.20	79.50	79.70	81.00	80.50	79.85	80.05
18	84.90	85.08	85.10	85.00	84.95	84.95	85.62	85.40	85.70	85.70	85.70	85.70
19	90.00	90.00	90.30	89.96	90.00	90.00	90.00	90.00	89.95	89.95	89.60	89.60
20	94.80	94.80	95.00	94.50	95.00	95.10	95.00	95.00	95.00	95.30	95.10	95.30
21	97.65	—	97.60	—	97.30	—	97.10	—	96.70	—	96.10	—

NACA

(b) Chordwise.

Figure 3.- Concluded.

[redacted]