TECHNICAL MEMORANDUMS

NATIONAL ADVISORY COMMITTEE FOR AERONAUTICS

Library, L.M.A.L.

No. 366

CALCULATION OF COMBINING EFFECTS IN THE STRUCTURE OF AIRPLANE WINGS

A Rational Basis for Estimating the Reduction in the Design Load on Wing Beams Due to the Influence of Ribs and Covering toward Causing the Beams to Deflect Together

By K. Thalau

From "Berichte und Abhandlungen der Wissenschaftlichen Gesellschaft für Luftfahrt," July, 1925

PROPERTY
of the Langley
Memorial Aeronautical
Laboratory

Washington
June, 1926

4.2
4.4.1
4.7.3

NASA Technical Library
3 1176 01440 1500

NATIONAL ADVISORY COMMITTEE FOR AERONAUTICS.

TECHNICAL MEMORANDUM NO. 366.

CALCULATION OF COMBINING EFFECTS IN THE STRUCTURE OF AIRPLANE WINGS.*

A Rational Basis for Estimating the Reduction in the Design Load on Wing Beams Due to the Influence of Ribs and Covering toward Causing the Beams to Deflect Together.

By K. Thalau.

In beginning my lecture with the sentence "Aviation means light construction," I am only stating a generally accepted principle. A saving in structural weight which must take account of the ounces (hardly noticeable and not at all necessary in other technical fields) leads to further progress in the field of aviation. The ideal airplane (naturally considered here from the viewpoint of strength), which contains the minimum amount of material required to withstand the attacking forces, is yet to appear. Inaccurate knowledge of these forces, on the one hand, and mathematical calculations which do not correctly indicate the allowable limits, on the other hand, combine to form "anxiety coefficients" which always lead to excessively heavy construction.

*"Zur Berechnung von Verbundwirkungen in Flugzeugflügeln." From "Berichte und Abhandlungen der Wissenschaftlichen Gesellschaft für Luftfahrt," a supplement to "Zeitschrift für Flugtechnik und Motorluftschiffahrt," July, 1925, pp. 53-56.

We will now turn our attention for a short time to a subject which might be designated in general as "combining effects in airplane structures" and from which I have selected a special portion "combining effects in airplane wings" for further elucidation. These will certainly render it possible to save some of the dead weight.

The expression "combining effects" refers to the fact that, when two or more members are joined together, they all participate in the reception of the forces, even when they are not subjected to the direct action of the forces. Hence the more heavily stressed members generally transmit a portion of their burden to the other members. The unequal loading of a structure is therefore necessary to obtain a combining effect. Such is always the situation, however, in the cases we shall consider. I only need here to remind you of the so-called B and C flight cases with their unpleasant torsion phenomena where, especially in the latter case, the spars are subjected to oppositely directed forces. The nature of the intermediate structure and the form of combination naturally affect the distribution of the stresses.

If we now consider the usual wing structure (unfortunately, for obvious reasons, I cannot include structures like, for example, the Junkers wings), we will designate as main girders two spars more or less rigidly connected by ribs at definite intervals. To these is then attached the covering, of cloth or

wood, whose effect differs greatly according to the material, form and method of attaching.

The best structures are those which enable us to consider the whole wing as a plate. Of the two combining effects:

1. The effect of the ribs,
2. The effect of the covering,

we will now consider the first for a cantilever, unbraced wing with two spars. Fig. 1 will remind us principally of the effect of the air forces in the C case. The straight line represents the cross section of a wing with the chord t. The spars are at A and B. Over A the air-force distribution is negative, and over B it is positive. We accordingly have the case where the air forces act on the girders with opposite signs, as shown in projection by Fig. 2.

The two horizontal lines represent the spars, each stressed on only one side and joined, at intervals of λ, by rigidly attached ribs. Such a structure may be designated as a rigid lattice girder, because the attacking forces act perpendicularly to the plane passing through the axes of both spars. We will consider only the air forces acting vertically on the wing, the horizontal components not being given any attention here.

For greater clearness, we will first consider a system of two spars connected by only two ribs and will convert this statically indeterminate girder into a statically determinate girder, by cutting the ribs in the middle (Fig. 3) (cf. the article by

Ballenstedt, "Technische Berichte," Vol. III, No. 4). The statically determinate main system then consists of two independent unbraced girders, on one of which, the front spar, we will first cause the external forces "1" to act at the junction points. In reality, the forces "A" arise so that we would have to multiply the obtained results by "A."

If we now cause the forces "B" to attack the other girder, the rear spar, we obtain the effects, symmetrical or antisymmetrical, corresponding to the preceding results, which effects we can obtain, according to the law, by the addition of the separate components, in order to obtain the diagram of the actual forces.

The question is now as to what external forces we shall substitute instead of the destroyed internal forces, at the point where the ribs are cut, in order to restore the original state of equilibrium. As shown in Fig. 3, this result is obtained by the forces π, a knowledge of whose values sufficiently answer the requirement for greater mathematical accuracy, without making the computation too troublesome.*

The action of the π forces becomes apparent, when we examine the diagram again. The external forces "1," which tend to

* Compare the investigation by the lecturer as reported in the 49th "Bericht der Deutschen Versuchsanstalt für Luftfahrt," "Zeitschrift für Flugtechnik und Motorluftschiffahrt," Feb. 14, 1925. Of the six unknown quantities normally arising at the point where the ribs are cut, there disappear, in the system of symmetry, both bending moments, the lateral force in the plane of the girder, and the force in the lengthwise direction of the ribs.

bend the spar downward, are to a certain extent prevented from doing so by the forces π. Since the work of changing the shape, which is now removed from the front spar, must, however, be assumed somewhere, it is obvious that it must be performed by the rear spar. The rear spar now bends, as shown in Fig. 4.

The π forces can then be computed by means of the well-known elasticity equations from the laws of the strength of materials. I will not now enter upon this simple calculation, but refer such of my audience as may be interested in it, to my article on this subject in the May 26, 1926, number of "Zeitschrift für Flugtechnik und Motorluftschiffahrt." I will only remark that the calculation can be considerably simplified by a suitable combination of the unknown quantities, i.e., by working with simple mathematical functions of the latter.

The bending deflections δ, which play the role of coefficients of the unknown quantities in the elasticity equations, differ here from the δ values only in the appearance of a member which concerns the torsion of the spars by the π forces. It is of some interest that the torsion member furnishes a much greater contribution to the δ value than the bending of the ribs, i.e., a change in the cross section of the spars to a more or less torsion-resisting profile has, within certain limits, a much greater effect on the behavior of the wing, than a change in the cross section of the ribs. At the end of this section, I will give a few numerical values for judging

the order of magnitude of the counterbalancing forces.

I have here restricted myself to five ribs as the maximum number, since the requisite calculations for this number can be rapidly made. I have been compelled, however, to change my former view on the practical limit of the number of ribs for the calculation, after learning from a colleague that, for example, 12 equations, each containing 12 unknown quantities, can be solved by the Gauss elimination process within a reasonable period (about 15 hours). A certain amount of practice is probably assumed, however.

The basis of the calculations is a cantilever wing of 4.5m (14.76 ft.) length and 0.97 m (3.18 ft.) distance between the spars, a computation weight of 800 kg (1764 lb.) for the airplane, and a load multiple of 6 in case A, 3.5 in case B, 1.5 in case C, all normal assumptions. In the individual cases, the front and rear spars receive the loads in kg/cm as given in Fig. 5, with a trapezoidal reduction in the load diagram toward the ends. The reducing π forces were determined for the B case. The individual conditions were tested with 1-5 ribs, whereby the moments of inertia of the spars, $J_x : J_y = 40 : 1$, and the inertia moments of the spars to those of the ribs were as 10 : 1. Fig. 6 shows the effect of a rib at the wing tip. There is a transverse or shearing force of 126 kg (278 lb.), and a counterbalancing, fixed-end moment of 567 kg-m (4101 ft.-lb.) so that, instead of the pre-

viously obtained moment of 2954 kg-m (21366 ft.-lb.) without regard to the combination, a fixed-end moment of 2387 kg-m (17265 ft.-lb.) appeared, or a diminution of 19.2%. The next case (Fig. 7) brings an apparent surprise. If we now introduce the action of a second rib, then, with the increase in the π force of the outer rib, $\pi_1 = 138.5$ kg (305 lb.), that of the inner rib becomes negative, namely, -15.8 kg (34.8 lb.), i.e., there is here caused by the second rib a diminution of the improvement resulting from the first rib. The total diminution at the fixed end is 19%, about the same as before. The inner shearing force increases all the more negatively, the farther inward the second rib is placed. Fig. 8 shows the three next cases.

These (at first unexpected) negative shearing forces of the inner rib are, however, comprehensible. if we picture to ourselves the effect of the forces and moments of a girder on several supports (these supports to be considered elastically flexible downward in this case). This affects the total load reduction only slightly, as shown by the numbers. We must, moreover, take into consideration the fact that the inner rib with a negative shearing force further increases the bending moment but, in compensation therefor, diminishes the unfavorable effect of the torsion moment produced in the spar by the outer rib.

We now let the third, fourth and fifth ribs in succession come into simultaneous action with the preceding ribs (Figs. 9-

11) and obtain similar results. In Fig. 9, the total diminution of the load at the fixed end is found to be 18.9%. If the innermost rib is shifted farther inward, the load diminutions become respectively, 18.7 and 18.4%. In Fig. 10, the total load diminution at the fixed end is 18.7. If rib 4 is situated entirely inside, the load diminution at the fixed end is 18.4%. In Fig. 11 we have five ribs with a resulting diminution of 18.4%.

As already demonstrated by comparison of the percentages, the law of the shearing forces may be stated as follows: Whatever may be the number of ribs per unit length of the spars, the sum of their shearing forces remains constant.

We have now obtained a picture of the order of magnitude of the load-reducing forces. These values will vary, however, according to the method of construction. The above values are based on a ratio of the spar inertia moments of $J_x : J_y \doteq 40 : 1$. If we take, instead, a ratio of 10 : 1, the shearing force in the first example becomes 205 kg (452 lb.) instead of 126 kg (278 lb.), accompanied by a diminution of 31.3% of the moment at the fixed end of the spar. Should $J_x = J_y$ in the most favorable case, there would then be a shearing force of 252 kg (556 lb.) with a load diminution of 38.4% at the fixed end. This would be a limiting case, which could probably not be attained simply by means of ribs. The numbers given, however, demonstrate the value of such experiments, and all the more because they are of a very simple nature and are con-

FILE COPY
To be returned to
files of the Langley
Memorial Aeronautical
Laboratory

firmed by all previous experiments.

I have not the time to discuss the three-spar wing. The method of calculation is the same, however. For these systems, I again refer you to my previously mentioned article in the "Z.F.M." Here, in the case of a symmetrical system, it is also possible, by a simple transformation of the unknown quantities, to resolve the number of the n elasticity equations with n unknowns into two groups, each having $n/2$ equations with $n/2$ unknowns, thus greatly facilitating the computation. I will now conclude my remarks on the effect of the ribs with the following summarization.

A considerable diminution in the loading of the spars can be attained by suitable structural measures. The determination of the shearing forces for four or five ribs is sufficient to give an approximate idea of their order of magnitude. The end points of the shearing-force ordinates lie approximately on a curve, as shown in Fig. 12.

I now ask you to follow me awhile in the field of the combining effects due to the wing covering. I would like you to accept my deductions and calculations without demonstration, partly because they are not easy to demonstrate here, but chiefly because reliable numerical demonstrations cannot yet be made, due to the lack of exact experimental bases. Nevertheless, an interpretation of the problem will be given, which may lead to its practical solution. This interpretation is

based on the presence of the ribs, which certainly cause the covering, by being held firmly in a definite shape, to participate in the reception of the bending stresses. We can therefore put the question as to what increase in the action of the ribs is produced by the addition of the covering.

After the hypothesis of an assumption of the bending stresses by the wing covering has thus been made a condition, we accordingly conceive of the covering as a simple plate of unknown moment of inertia, to be firmly framed between the spars. This conception is illustrated by Fig. 13, whereby, for the avoidance of errors, I emphasize the fact that the plate, here located in the neutral axis, with the reduced moment of inertia still to be determined, is not to be conceived as produced by the addition of the thicknesses of the covering material.

An outer running load of p kg/cm on a girder, e.g., the front spar, causes some such deformation of the wing as shown in Fig. 14. The loaded front spar bends more than the rear spar, but not so much as it would, were it not for the combining members, which transfer a portion of the load to the rear spar. Both spars are twisted, however, in every cross section, through a definite angle τ_x (the index x denoting the variability of τ with the length of the spar). In order to render the wing accessible for further investigation, we will cut the plate into separate strips of "1" depth and consider the state of equilib-

rium of such a unit strip. In Fig. 15 the changes in position of the spars are resolved into the bends δ left and right, as likewise the torque τ left and right.

The difference in bend $\delta_r - \delta_l = \delta$ is decisive for the calculation, because uniform bending would produce no bearing reactions. The assumption regarding the torque τ is a temporary source of trouble. It depends on the spar material, cross section, rigidity of fixation, etc., and varies with x in the longitudinal axis of the spar. Accurate numerical values can be obtained only by thorough experimentation. We can overcome this difficulty for the present by making the torque, in the first approximation, directly proportional to the length of the spar, so that

$$\tau_l = a\left(1 - \frac{x}{s}\right) \quad \text{and} \quad \tau_r = b\left(1 - \frac{x}{s}\right)$$

in which a and b are values found by measuring the torques at the free ends of the spars. The unknown bearing reactions of the covering strips on the left spar, the bearing pressure X_a and the moment X_b at the fixed end are obtained from two elasticity equations for this system, which in turn are derived, according to the law, from the virtual displacements. The elasticity or working equations are known to contain ordinarily the virtual work done by the bearing motions, as a result of the sinking and torsion of the supports. The values of the bearing

reactions are therefore dependent not only on the external loading and system quantities, but are also functions of δ and τ (right and left). I purposely omit their formula values. Let the assumption suffice that they are now known to us.

Please note that, for every spar section "1" we now know the load, left q_l and right q_r, since the bearing pressure of each plate strip is indeed only a load ordinate for the spar unit of length. We have, however, for the elastic line of each wing, the differential equation

$$\frac{d^2y}{dx^2} = \pm\frac{M}{E\ J}$$

in which the bending deflections of the moment line stand. The moment line is, however, dependent on the outer load and, indeed, the second deduction of the moment is equal to the load per unit of length

$$\frac{d^2\ M}{d\ x^2} = q$$

Consequently, the fourth differential quotient of the bending deflections is equal to the absolute load per unit of length

$$\frac{d^4y}{dx^4} = \frac{q}{E\ J}$$

If this equation is arranged for each spar, we have on the left

$$\frac{d^4\ \delta_l}{d\ x^4} = \frac{q_l}{E\ J}$$

and on the right

$$\frac{d^4 \delta_r}{d\ x^4} = \frac{q_r}{E\ J}.$$

Expressed in words, the fourth derivative of the downward deflections is equal to the load per unit length. We had calculated the latter from the elasticity equations for the bearing reactions of a plate strip and determined them as functions of the load, of the spar bending deflections and of the spar torques. We can accordingly subtract from each other the differential equations for the left and right spars and obtain the new equation for the difference in the spar bending deflections.

$$\frac{d^4\delta}{dx^4} = -\ \alpha - \beta\ \delta - \gamma\ \left(1 - \frac{x}{s}\right)$$

Herein α, β and γ are constants which depend on the load, the relations of the system and the choice of the torque numbers. The solution of this equation encounters no exceptional difficulty. The four integration constants admit of a few simplifications, in so far as the constants $B = D$ and $C = A - 2B$. The originally somewhat troublesome solution of the equation according to δ is thus simplified as below (Fig. 16).

$$\frac{d^4\delta}{dx^4} = -\ \alpha - \beta\ \delta - \gamma\ \left(1 - \frac{x}{s}\right)$$

$$\alpha = -\ \frac{p}{EJ_H};\quad \beta = \frac{24}{l^3}\ \frac{J}{J_H};$$

$$\gamma = -\ \frac{12}{l^2}\ \frac{J}{J_H}\ (a + b)$$

1. For $x = s$, $\delta = 0$

2. " $x = s$, $\frac{d\delta}{dx} = 0$

3. " $x = 0$, $\frac{d^2\delta}{dx^2} = 0$

4. " $x = 0$, $\frac{d^2\delta}{dx^3} = 0$

$$\delta = -\frac{\alpha}{\beta} - \frac{\gamma}{\beta}\left(1 - \frac{x}{s}\right) + 2\,A \cos n\,x \operatorname{Cos} n\,x +$$

$$+ 2\,B \cos n\,x \operatorname{Cos} n\,x(\tan n\,x + \operatorname{Tan} n\,x - 1)$$

$$n = \sqrt[4]{\frac{\beta}{4}}$$

$$A = \frac{n\,\alpha(2 - \operatorname{Tan}\sigma + \tan\sigma) + \frac{\gamma}{s}(\tan\sigma + \operatorname{Tan}\sigma - 1)}{2\,\beta\,n \cos\sigma \operatorname{Cos}\sigma\,(2 - \operatorname{Tan}^2\sigma + \tan^2\sigma)}$$

$$B = \frac{-\frac{\gamma}{s} - n\,\alpha\,(\operatorname{Tan}\sigma - \tan\sigma)}{2\,\beta\,n \cos\sigma \operatorname{Cos}\sigma\,(2 - \operatorname{Tan}^2\sigma + \tan^2\sigma)}$$

$$\sigma = n\,s$$

There is no difficulty in the numerical evaluation, aside from the work of computation. With the knowledge of the bending-deflection differences, the load diminutions in every cross section are therefore computable. The variableness of the air-force distribution in the direction of the wing chord is thereby easily allowed for in the individual flight conditions.

The effect of the covering on the three-spar wing can also be determined in a similar way. In all cases, it is very important to know, first, what law the spar torques follow and,

further, what moments of inertia must be put for the plate strips of the covering. Here, as already mentioned, comprehensive experiments must be instituted, in order to determine the coefficient with which to reduce the mathematical results, in order to bring about the agreement of the computation with the actual behavior of the wing. The load diminutions thus obtained still depend on too many assumptions to admit the claim of accuracy.

If experimental bases were available, we could simplify the computation of all the bending-deflection differences, in so far as the quickly computable maximum bending difference is determined and the approximation is made that the desired differences are rectilinear from this maximum value to the zero point of the bending deflections. The error thus involved is not too great for an approximate calculation.

If, on the one hand, we lack confidence in these numerical evaluations of the differential equation and, on the other hand, do not wish to disregard the effect of the covering, we can overcome the difficulty by a simple experiment. We can determine the bending deflections of a rib under a given load, then combine this rib with at least two neighboring ribs by means of the provided covering material, load all ribs with the proper loads and then measure the new deflections of the rib in question. We then determine the increased theoretical inertia moment of the rib, for which these diminished deflections would

have been produced, and can now compute the shearing stresses in the rib according to the methods mentioned in the first section of this lecture.

In concluding, I wish to say that the methods suggested do not constitute a perfect solution of the problems, but that they are intended rather to direct your attention to ways for saving material, i.e., weight.

I trust, however, that I have demonstrated one fact, namely, that the effects discussed must no longer be disregarded. They must be taken into account especially in the designing of large airplanes, since the dead weights of the latter and particularly of the wings claim an ever increasing share of the available lifting forces. The combining effects offer us the possibility of making the curve of the actual weight of the wings more nearly coincide with the theoretical.

Translation by Dwight M. Miner,
National Advisory Committee
for Aeronautics.

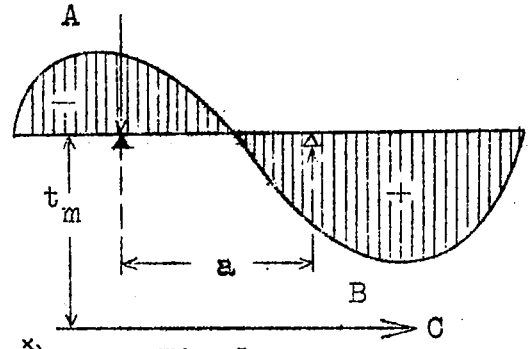

Fig.1

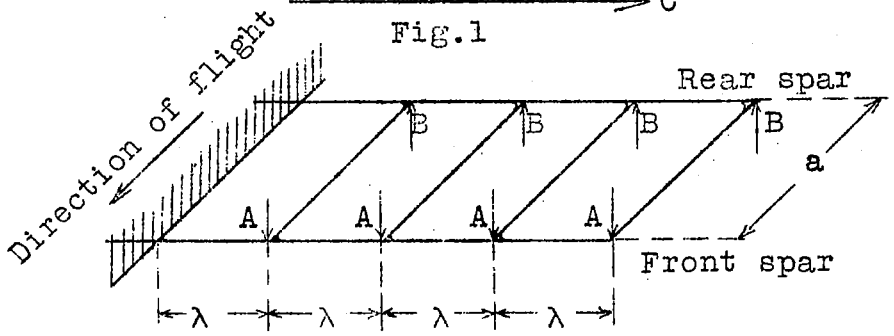

Fig.2

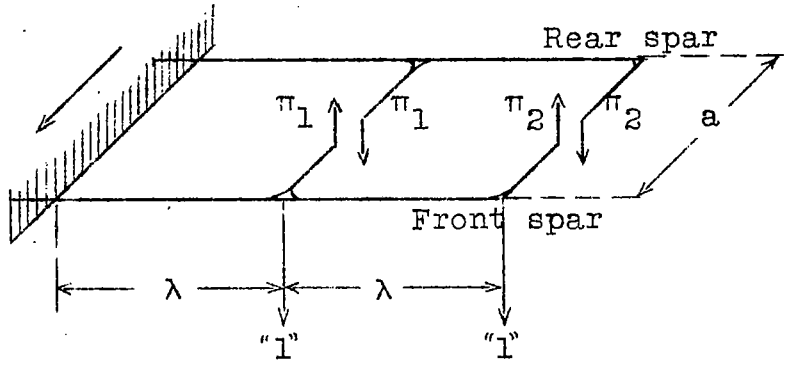

Fig.3

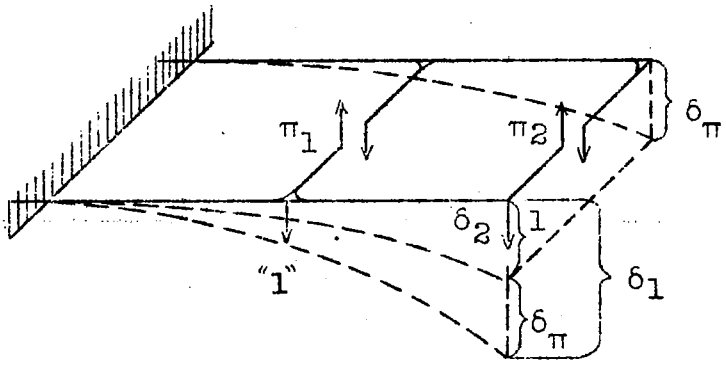

Fig.4

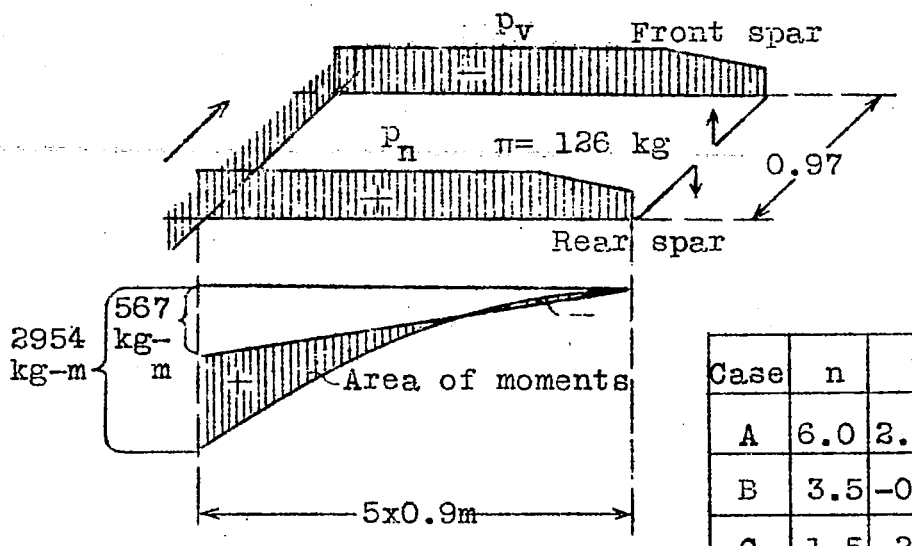

Fig.6 Reduction of the moment at the fixed end M_w 19.2%

Case	n	p_v	p_n
A	6.0	2.725	2.735
B	3.5	-0.578	+3.599
C	1.5	-2.821	+2.821

Fig.5

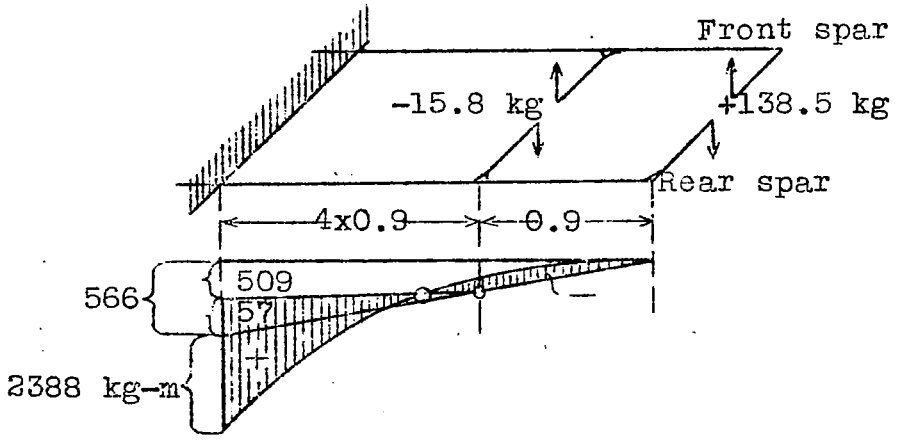

Fig.7 Reduction of the moment at the fixed end M_w 19%

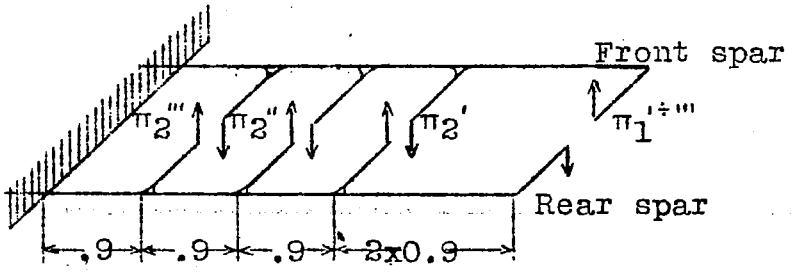

π_1' = 140.3 kg; π_2' = -26.5 kg; Reduction 19%
π_1'' = 141.0 kg; π_2'' = -46.8 kg; " 18.7%
π_1''' = 137.0 Kg; π_2''' = -80.2 kg; " 18.4%

Fig.8

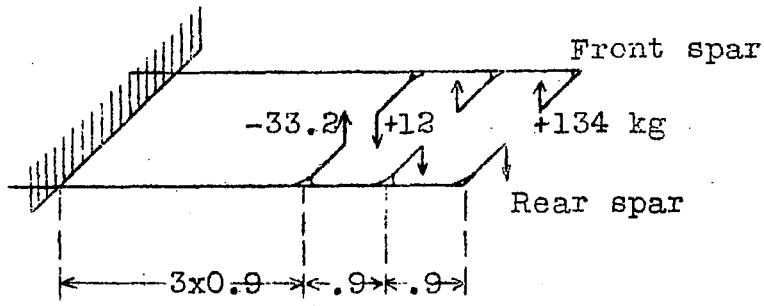

Fig.9 Reduction of the moment at the fixed end M_w 18.9,18.7 & 18.4% respectively.

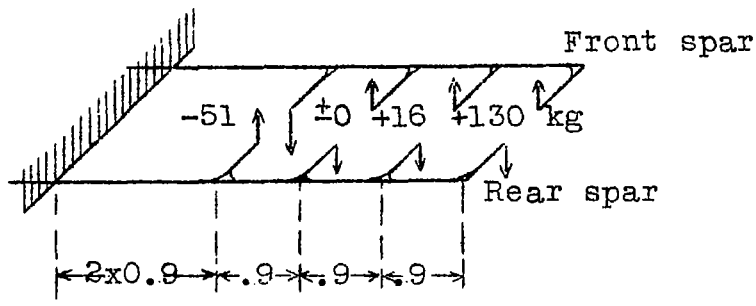

Fig.10 Reduction of the moment at the end M_w 18.7 & 18.4% respectively.

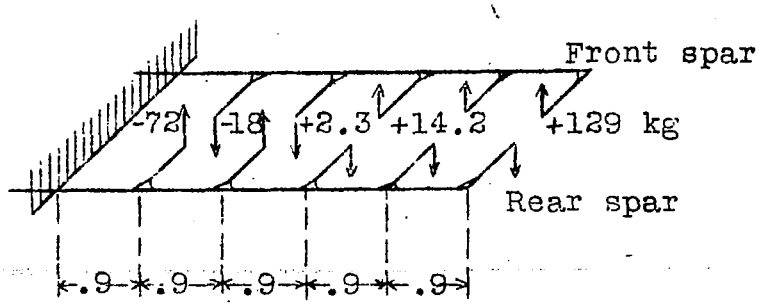

Fig.11 Reduction of the moment at the end M_w 18.4%

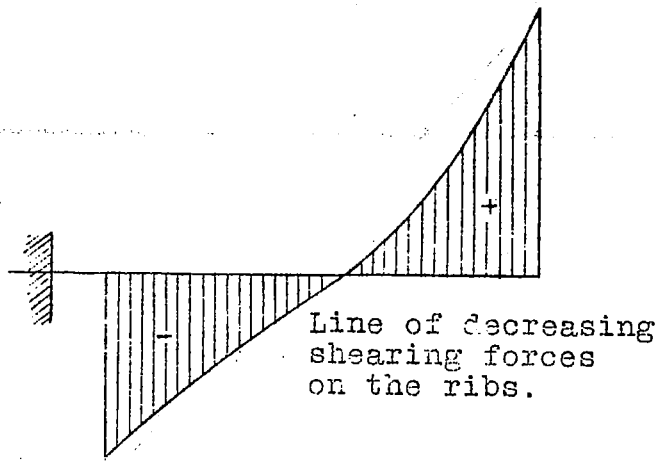
+
-
Line of decreasing
shearing forces
on the ribs.

Fig.12

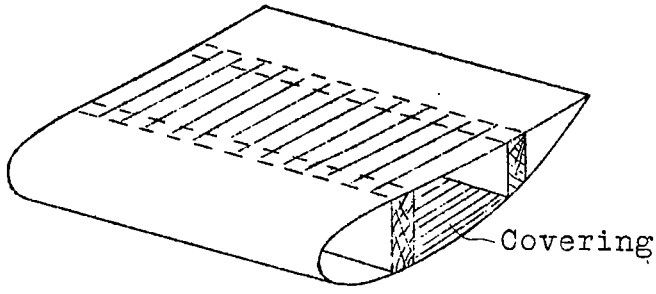
Covering

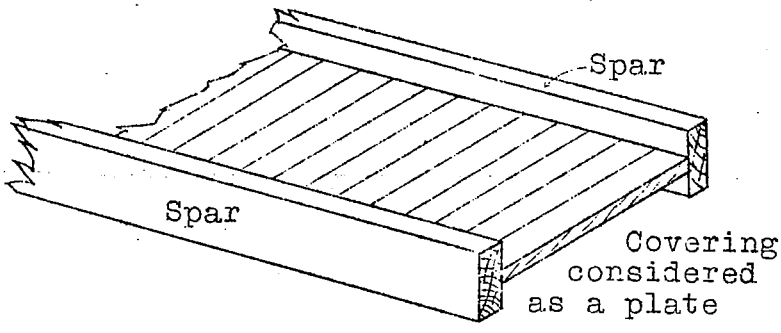
Spar
Spar
Covering
considered
as a plate

Fig.13

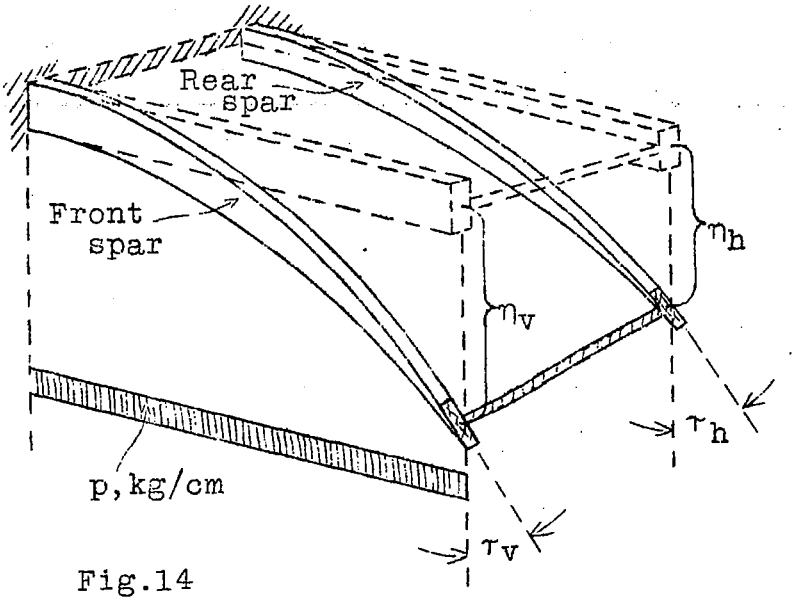

Fig.14

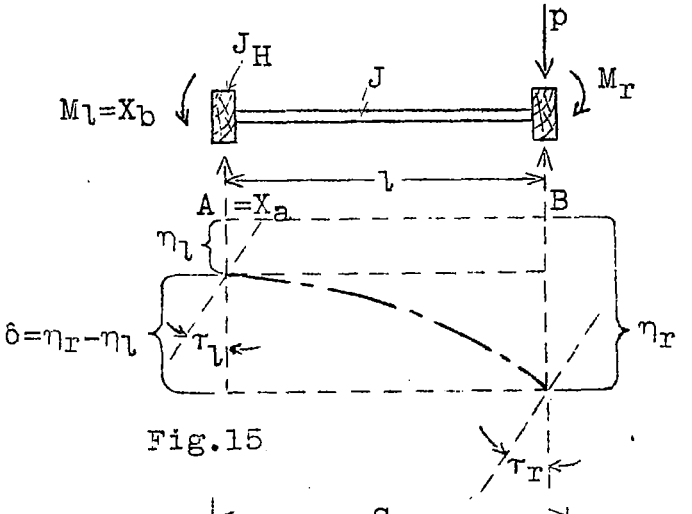

Fig.15

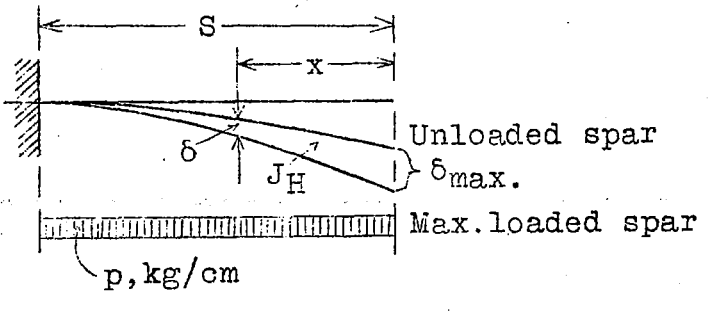

Fig.16

NASA Technical Library
3 1176 01440 1500