3 1176 00104 5013

TECHNICAL MEMORANDUMS

NATIONAL ADVISORY COMMITTEE FOR AERONAUTICS

No. 982

THE DESIGN OF JET PUMPS

By Gustav Flügel

VDI-Forschungsheft 395, March-April 1939

Washington
July 1941

NATIONAL ADVISORY COMMITTEE FOR AERONAUTICS

TECHNICAL MEMORANDUM NO. 982

THE DESIGN OF JET PUMPS*

(Injectors and Ejectors)

By Gustav Flügel

The theory of jet pumps is still rather incomplete, and relatively little has been published so far. Successful designs have been developed by trial and error and information obtained in this way is naturally guarded by the various firms concerned.

The author shows that by applying both the energy and impulse theorems the optimum throat dimension of the mixing nozzle and best shape of intake can be predicted approximately in a relatively simple manner. The necessary length of the mixing nozzle follows from Prandtl's turbulent mixing theory. The calculations are carried out for the mixing of similar and dissimilar fluids.

Notation** (Figs. 1 and 4)

Subscripts

e space before driving (or power or actuating) nozzle

o suction chamber

n end of throat, start of diffuser

a discharge from jet pump

1 power jet (motive agent) } in plane of orifice of driving nozzle

2 suction jet (delivered medium) } in plane of orifice of driving nozzle

*"Berechnung von Strahlapparaten." VDI-Forschungsheft 395, March-April 1939, pp. 1-21.

**The different notations in parts III and IV are explained in the text.

Dimensions

f_1 section of actuating jet
f_2 section of suction jet
$F_1 = f_1 + f_2$ section of mixing nozzle (or collector)
} in plane of orifice of actuating nozzle

F_m narrowest section of mixing nozzle (throat)

$d = 2\sqrt{F_m/\pi}$ diameter at narrowest section of mixing nozzle

$D = 2\sqrt{F_a/\pi}$ diameter at outlet from jet pump

Pressures

p_m mean pressure along wall of intake nozzle

p_a', p_a'' } terminal pressures

$g = 9.81\ m/s^2$ acceleration of gravity

γ specific weight of fluids, gas and steam (kg/m^3)

v specific volume (m^3/kg)

$\varphi_1 \approx 0.97$ to 0.99
$\varphi_2 \approx 0.92$ to 0.96 } speed coefficients

Flow velocities c (m/s)

c_e inflow velocity at actuating nozzle

$c_o = \varphi_1\sqrt{\frac{2g}{\gamma}(p_e-p_o)}$ velocity at pressure drop from p_e to p_o

$c_1 = \varphi_1\sqrt{\frac{2g}{\gamma}(p_e-p_1)}$ outflow velocity from actuating nozzle at (cross) section f_1 (c_e disregarded)

$c_2 = \varphi_2\sqrt{\frac{2g}{\gamma}(p_o-p_1)} = \alpha\ c_o$ speed of inducted fluid near the actuating nozzle orifice in (cross) section f_2 (speed in suction chamber negligible)

c_m mixing speed (at constant pressure p_1)

c_n speed at entry in diffuser

$c_a = \tau\ c_o$ discharge velocity from jet pump (usually considered negligibly small)

Speed ratios

$$\alpha = \frac{c_2}{c_o} = \frac{\varphi_2}{\varphi_1}\sqrt{\frac{p_o-p_1}{p_e-p_o}}$$

$$\nu = \frac{c_2}{c_1}; \quad \sigma = \frac{c_n}{c_o}; \quad \tau = \frac{c_a}{c_o}$$

Quantities (kg/s) and quantitative relations (or proportions)

$G_1 = f_1\ c_1\ \gamma$ weight of actuating fluid per second

$G_2 = f_2\ c_2\ \gamma$ weight of delivered fluid per second

$G_1 + G_2$ weight of fluid discharged per second from jet pump

$\mu = \frac{G_1}{G_2}$ quantitative proportions (proportional consumption of propellant)

Efficiencies

η = 0.75 to 0.80 efficiency of conversion from kinetic to potential energy

η_s efficiency of jet pump (effective energy: energy consumed)

η_d diffuser efficiency

Heat content per kg i (kcal/kg)

i_m heat content of mixture at start of compression

Adiabatic heat gradients $H = \Delta i$ (kcal/kg)

H_e adiabatic heat gradient corresponding to pressure drop from p_e to p_o

H_1 adiabatic heat gradient corresponding to pressure drop from p_e to p_1

H_2 adiabatic heat gradient corresponding to pressure drop from p_o to p_1

H_a adiabatic heat gradient of propellant corresponding to pressure drop from p_e to p_a

H_K adiabatic heat gradient of inducted gas or steam corresponding to pressure rise from p_o to p_a

H_K' adiabatic heat gradient of vapor corresponding to pressure rise from p_1 to a terminal pressure p_a'

H_K'' adiabatic heat gradient (partial gradient) corresponding to pressure rise from p_n to p_a''

T absolute temperature (deg)

c_p and c_v specific heat at constant pressure and constant volume (kcal/kg°)

$\kappa = \frac{c_p}{c_v}$ adiabatic exponent

R gas constant (mkg/kg°)

Friction

W friction on inside wall of nozzle (kg)

P dragging force between moving layers (kg)

$\tau = dP/dO$ shearing stress between moving layers (kg/m²)

O frictional surface (m²)

λ friction coefficient for stationary walls

χ friction coefficient between moving layers

ζ loss coefficient

v turbulent mixing speed (rate of exchange) (m/s)

I. ANALYSIS OF JET PUMPS BASED ON ENERGY EQUATION

This method of calculation has so far been employed generally and must be discussed briefly as a comparative basis for the new formulas, once in application to jet pumps for liquids (for instance, water jet - water pumps), and then for gas or steam (for example, steam jet - steam compressor).

The details of a jet pump can be seen from figure 1. A conical actuating nozzle forces the actuating fluid in the mixing nozzle, which consists of three pieces: an intake with well-rounded entry, an intake with slightly curved edge (curvature radius R) and a throat of cylindrical shape (length L, diameter d, section F_m). Adjoining the throat of the mixing nozzle is the tapered diffuser with cone angle ϑ. The discharge section F_a (diameter D) is mathematically determined or else is so chosen that the discharge velocity c_a becomes very low.

a) Jet Pumps for Fluids

In the subsequent considerations the effect of the height level h is ignored; this is always justified for gas and steam; whereas in vertically mounted jet pumps for liquids the height term may be at times of some significance. In the latter case the equations given here can always be generalized so that instead of pressure energy p/γ the total potential energy $(p/\gamma) + h$, or instead of p the expression $p+\gamma h$ is used, where h, of course, indicates the height level of the momentary reference point above an arbitrarily assumed zero level.

The common mixing speed c_m follows - on the assumption that the mixing of actuating and delivered fluid takes place at constant pressure p_1 - from the impulse theorem at

$$c_m = \frac{\mu c_1 + c_2}{1 + \mu} = \frac{\mu \frac{c_1}{c_0} + \alpha}{1 + \mu} c_0 \qquad (1)$$

where

$$\frac{c_1}{c_o} = \sqrt{\frac{p_e - p_1}{p_e - p_o}} = \sqrt{1 + \frac{p_o - p_1}{p_e - p_o}} = \sqrt{1 + \alpha^2 \left(\frac{\varphi_1}{\varphi_2}\right)^2} \tag{2}$$

With $c_a = \tau c_o$ as the discharge velocity from the jet pump, which usually can be considered as being negligibly small, the pressure rise follows from the energy equation at

$$p_a - p_1 = (p_a - p_o) + (p_o - p_1) = p_a - p_o +$$

$$+ \alpha^2 \left(\frac{\varphi_1}{\varphi_2}\right)^2 (p_e - p_o) = \eta \frac{\gamma}{2g} (c_m^2 - c_a^2) = \eta \frac{\gamma}{2g} \times$$

$$\times c_o^2 \left[\left(\frac{\mu \frac{c_1}{c_o} + \alpha}{1 + \mu}\right)^2 - \tau^2\right] = \eta \varphi_1^2 (p_e - p_o) \times$$

$$\times \left[\left(\frac{\mu \frac{c_1}{c_o} + \alpha}{1 + \mu}\right)^2 - \tau^2\right] \tag{3}$$

if $\eta = 0.75$ to 0.80 is the efficiency of conversion from kinetic to potential energy.

Then the quantitative relation follows at

$$\mu = \frac{w - \alpha}{(c_1/c_o) - w} \tag{4}$$

$$\text{with} \quad w = \sqrt{\frac{1}{\eta \varphi_1^2} \left[\frac{p_a - p_o}{p_e - p_o} + \alpha^2 \left(\frac{\varphi_1}{\varphi_2}\right)^2\right] + \tau^2}$$

where the negligible c_a usually permits putting $\tau = 0$. If the pressures p_e, p_o, and p_a are prescribed, then α can be varied. At a certain value α it then affords a minimum value for μ; this is the most favorable α. With α the speed c_2 and hence the section of flow f_2 for the inducted fluid is defined. Figure 2 illustrates the values of μ plotted against α for different ratios $(p_a - p_o)/(p_e - p_o)$. It will be noted that μ becomes a min-

imum at $\alpha = 0.20$ to 0.25. The most favorably designed jet pump therefore manifests a fairly large pressure drop $p_o - p_1$ in the intake of the mixing nozzle. Equation (4) is the basic equation for the practical calculation of jet pumps.

Of the potential improvements afforded by high inflow velocities c_2, no advantage seems to have been taken so far in the design of jet pumps, at least not intentionally, because of the undesirable pressure drop from p_o to p_1 and the accompanying high diffuser losses. But at high inflow velocity the so-called shock losses are lower as a result of the reduction of $c_1 - c_2$, and the most favorable design naturally corresponds to the point at which the sum of shock and diffuser losses is a minimum.

In theory the narrowest section of the mixing nozzle should be

$$F_m' = \frac{G_2(1 + \mu)}{c_m \gamma}$$

although according to experience the section must be

$$F_m = (1 + z)\, F_m' = (1 + z)(1 + \mu)\, \frac{G_2}{c_m \gamma} \tag{5}$$

usually with $z = 0.3$ to 0.5.

Also of practical importance is the efficiency η_s of a jet pump, which, as in hydraulic machines, represents the ratio of effective to absorbed energy (the outflow energy per second $c_a^2(G_1 + G_2)/2g$ being considered lost); that is,

$$\eta_s = \frac{G_2 \dfrac{p_a - p_o}{\gamma}}{G_1 \dfrac{p_e - p_a}{\gamma}} = \frac{p_a - p_o}{\mu(p_e - p_a)} \tag{6}$$

Comparatively good efficiencies are obtainable according to figure 3. In many special cases a different definition of the efficiency may be in place for the over-all efficiency of a whole jet pump unit;* although equation (6)

*If the efficiency of the jet pump described in the above reports is computed according to equation (6), the figure is only about half as high as given in these reports (H. Henschke).

will always characterize the quality of a single jet pump correctly.

b) Gas and Steam Jet Pumps

Here the heat gradients $\Delta i = H$ replace the pressure differences in the equations (fig. 4).

The heat content and heat gradient can be read from the i,s diagram (fig. 4) or, for gases, computed. For the latter, it is:

$$\Delta i = c_p \, \Delta T = c_p(T - T') \tag{7}$$

whereby the temperature change follows the well-known adiabatic law

$$\frac{T}{T'} = \left(\frac{p}{p'}\right)^{\frac{\kappa-1}{\kappa}} \tag{8}$$

with, as a rule, $H = \pm c_p(T - T')$; H must always remain positive.

In steam jet compressors the inducted steam is usually saturated (hence point P on the saturation line in fig. 4). Even as actuating steam, saturated steam is known to be most favorable (hence point A also should lie preferably on the saturation line).

For c_0, c_1, and c_2 the relations read:

$c_0 = \varphi_1 \times 91.5 \sqrt{H_e}$ where $91.5 = \sqrt{2g/A}$ and

$A = \frac{1}{427}$ the mechanical equivalent of heat

$c_1 = \varphi_1 \times 91.5 \sqrt{H_1}$

$c_2 = \varphi_2 \times 91.5 \sqrt{H_2} = \alpha \, c_0$

with $\alpha = \frac{c_2}{c_0} = \frac{\varphi_2}{\varphi_1}\sqrt{\frac{H_2}{H_e}}$

Equation (8) gives the heat gradients for gases at

$$H_e = c_p\ T_e \left[1 - \left(\frac{p_o}{p_e}\right)^{\frac{\kappa-1}{\kappa}} \right]$$

$$H_1 = c_p\ T_e \left[1 - \left(\frac{p_1}{p_e}\right)^{\frac{\kappa-1}{\kappa}} \right]$$

$$H_2 = c_p\ T_o \left[1 - \left(\frac{p_1}{p_o}\right)^{\frac{\kappa-1}{\kappa}} \right]$$

Assume the proportional value α, and

$$H_2 = \alpha^2 \left(\frac{\varphi_1}{\varphi_2}\right)^2 H_e \tag{9}$$

can be computed. If, in the i,s chart (fig. 4) the length $H_2 = PS$ from point P is plotted vertically downward, the pressure line passing through S is equivalent to the orifice pressure p_1 of the steam nozzle. For gases this pressure can be obtained also from equation (8).

If the mixing of motive and delivered fluid is assumed to take place at constant pressure p_1, the mixing speed c_m follows, analagous to equations (1) and (2), at

$$c_m = \frac{\mu \frac{c_1}{c_o} + \alpha}{1 + \mu}\ c_o \tag{10}$$

with

$$\frac{c_1}{c_o} = \sqrt{1 + \frac{\alpha^2}{1 + \epsilon}\left(\frac{\varphi_1}{\varphi_2}\right)^2} \tag{11}$$

where the new value ϵ is defined by the ratio of the pressure gradients between the pressure lines p_o and p_1, measured on the saturation line and on the adiabatic curve H_1, respectively; hence

$$1 + \epsilon = \frac{H_2}{H_1 - H_e}$$

In most practical cases $1 + \epsilon \approx 1.15$ to 1.20. The heat content i_m of the mixture at start of compression (point I, fig. 4) follows from the energy equation at

$$i_m = i_I = \frac{1}{1 + \mu}(\mu\ i_e + i_o) - \left(\frac{c_m}{91.5}\right)^2 \tag{12}$$

By adiabatic compression of the mixture from point I on the compression gradient is according to the energy equation (if $c_a = \tau\ c_o$ the terminal velocity, which here also is usally negligible)

$$H_K' = \eta\left[\left(\frac{c_m}{91.5}\right)^2 - \left(\frac{c_a}{91.5}\right)^2\right] =$$

$$= \eta\,\varphi_1{}^2\ H_e\left[\left(\frac{\mu\frac{c_1}{c_o} + \alpha}{1 + \mu}\right) - \tau^2\right] \tag{13}$$

whereby

$$H_K' \approx H_K + H_2 = H_K + \alpha^2\left(\frac{\varphi_1}{\varphi_2}\right)^2 H_e$$

is sufficiently accurate. For gases the compression gradient can be computed from

$$H_K = c_p\ T_o\left[\left(\frac{p_a}{p_o}\right)^{\frac{\kappa-1}{\kappa}} - 1\right]$$

Then the plotting of gradient H_K' from point I (fig. 4) vertically upward brings the end point on the pressure line p_a', which corresponds to the highest obtainable terminal pressure the prescribed value p_a should have, strictly speaking, but which may be a little less for reasons of safety.

Equation (13) gives, similarly to equation (4), the quantitative ratio at

$$\mu = \frac{w - \alpha}{c_1/c_o - w} \tag{14}$$

with $$w = \sqrt{\frac{1}{\eta\,\varphi_1^2}\left[\frac{H_K}{H_e} + \alpha^2\left(\frac{\varphi_1}{\varphi_2}\right)^2\right] + \tau^2}$$

With this equation and prescribed gradients H_K and H_e the value μ in relation to different chosen values α can be computed and the best α established. The numerical conditions are practically the same as for the fluids (figs. 2 and 3), except for the heat gradients replacing the pressure gradients. Equation (14) is the basic equation for the practical calculation of jet compressors.

For the actual end point of the expansion line I-II the heat content of the mixture follows at

$$i_{II} = i_a = i_m + \left(\frac{c_m}{91.5}\right)^2 \tag{15}$$

which defines point II on the pressure line p_a' in the i,s chart. The heat content i_{II} remains the same (point III in fig. 4) even if the terminal pressure of compression is p_a instead of p_a'; hence the specific volume v_{III} of the mixture at discharge from the jet pump can be read off the i,s chart and the required discharge section

$$F_a = D^2\,\frac{\pi}{4} = \frac{G_2(1 + \mu)v_{III}}{\tau\,c_o} \tag{16}$$

computed.

The narrowest section $F_m = d^2\pi/4$ of the mixing nozzle also should be from 30 to 50 percent larger than the "theoretical" narrowest section F_m', that is, $F_m \sim (1.3$ to $1.5)\,F_m'$. Then, as long as the mixing speed c_m does not exceed velocity of sound, i.e., if

$$c_m \leqq \sqrt{\kappa\,g\,p_1\,v_I}$$

(v_I = specific volume at point I) the theoretical narrowest section is

$$F_m' = \frac{G_2(1 + \mu)v_I}{c_m} \tag{17}$$

When, however, c_m exceeds velocity of sound, F_m' should be computed as follows: The energy equation for an intermediate pressure p during compression from I to II (fig. 4) with the correlated speed $c = \xi c_m$ and the adiabatic compression gradient H' reads

$$H' = \eta \left(\frac{c_m}{91.5}\right)^2 (1 - \xi^2) \tag{18}$$

that is, with arbitrarily assumed ξ, H' can be computed according to this equation and related pressure p determined in the i,s chart. The heat content i of the mixture at this pressure is defined by

$$i = i_I + \left(\frac{c_m}{91.5}\right)^2 (1 - \xi^2) \tag{19}$$

where the corresponding phase point naturally lies on the compression line I-II, after which the pertinent specific volume v may be read off the i,s chart and the cross section of the flow

$$F' = \frac{G_2(1 + \mu)v}{\xi c_m} \tag{20}$$

computed. Then the determination of F' for various chosen ξ values (= 0.9, 0.8, 0.7, etc.) gives the derived minimum F_m'.

The efficiency of the jet compressor is

$$\eta_s = \frac{H_K}{\mu H_a} \tag{21}$$

if H_a is the adiabatic gradient of the driving steam during expansion from p_e to p_a.

II. ACCURATE CALCULATION OF THE PRESSURE RISE AND OF THE BEST SHAPE OF THE MIXING NOZZLE

The greatest drawback of the energy equation is that the assumption of complete intermingling of driving

fluid and delivered fluid at constant pressure p_1 is utterly incorrect, resulting from the fact that the narrowest section of the mixing nozzle must be designed from the "theoretically" narrowest section. In consequence, the calculation method does not give the correct information about the most important section of a jet pump and no data whatsoever regarding the necessary length ratios.

Practice proves that, under normal operating conditions, the intermingling is practically always accompanied by a pressure rise, so that at the end of the mixing nozzle usually a substantial or even a major part of the pressure rise will already have been achieved. This fact gives consideration to the subsequent method largely evolved from the impulse theorem according to which, first of all, a length for the mixing nozzle is assumed necessary to assure adequate mixing. The assumption of constant pressure p_1 during mixing can be dropped again later. The mixing advances in the narrowest section of the mixing nozzle under a pressure rise until a practically perfect intermingling has been achieved at the end of the narrowest section. This part of the pressure rise is readily computed according to impulse theorem. It is clear and closely according to practice that with the comparative slowness of the mixing process the length L of the narrowest section obviously must be fairly great in order to assure adequate mixing (which, in turn, is the premise for achieving proper energy conversion in the adjoining diffuser); it is therefore recommended that $L \approx 10\ d$. It may be stated that very favorable results have already been achieved with jet pumps computed on this basis, which are also in good agreement with the preliminary calculation, as will be reported elsewhere.

a) Jet Pumps for Liquids

Let p_n, c_n represent the pressure and the speed at the end of the narrowest section, the other relations remaining the same as before. Assume that, up to entry in the narrowest section of F_m, the mixing is achieved under constant pressure p_1 giving the pressure rise from p_1 to p_n, according to the impulse theorem:

$$F_m(p_n - p_1) = \frac{G_1}{g} c_1 + \frac{G_2}{g} c_2 - \frac{G_1 + G_2}{g} c_n - W \qquad (22)$$

where W is the frictional resistance on the inside wall of the nozzle, for which, after introduction of a reduced length L' (which must always be shorter than length L of the narrowest section)

$$W = \lambda\, O\, \frac{\gamma}{2g}\, c_n^2 = \lambda\, \pi\, d\, L'\, \frac{\gamma}{2g}\, c_n^2 \tag{23}$$

where O is the skin friction and $\lambda = \sim 0.004$ is the coefficient of friction for smooth surfaces. The loss in energy due to frictional resistance, referred to unit weight of mixture, is

$$\frac{W\, c_n}{G_1 + G_2} = \zeta\, \frac{c_n^2}{2g} \tag{24}$$

where ζ is a friction coefficient, which with allowance for equation (23) and flow equation

$$(G_1 + G_2) = c_n\, \gamma\, \frac{\pi}{4}\, d^2$$

is computed at

$$\zeta = 4\, \lambda\, \frac{L'}{d} \tag{25}$$

ordinarily, $\zeta \approx 0.04$ to 0.10. Herewith equation (22) can be written as follows

$$p_n - p_1 = \frac{G_2}{F_m\, g}\left[\mu\, c_1 + c_2 - (1 + \mu)\left(1 + \frac{\zeta}{2}\right) c_n\right] =$$

$$= \frac{G_2}{G_1 + G_2}\,(G_1 + G_2)\,\frac{c_0}{F_m\, g}\left[\mu\, \frac{c_1}{c_0} + \alpha - (1 + \mu)\left(1 + \frac{\zeta}{2}\right)\sigma\right] =$$

$$= \frac{\sigma\, c_0^2\, \gamma}{(1 + \mu)\, g}\left[\mu\, \frac{c_1}{c_0} + \alpha - (1 + \mu)\left(1 + \frac{\zeta}{2}\right)\sigma\right] \tag{26}$$

where, as before, (equation (21)),

$$\frac{c_1}{c_0} = \sqrt{1 + a^2\left(\frac{\varphi_1}{\varphi_2}\right)^2}$$

and $$\sigma = \frac{c_n}{c_o}$$

The subsequent pressure rise in the diffuser is, according to the energy equation:

$$p_a - p_n = \eta_d \frac{\gamma}{2g} (c_n^2 - c_a^2) = \eta_d \frac{\gamma}{2g} c_o^2 (\sigma^2 - \tau^2) \qquad (27)$$

where again $\tau = \frac{c_a}{c_o}$ is usually a negligibly small value and the intimate intermingling of the mixture permits a diffuser efficiency η_d of 0.75 to 0.80 for narrow throat dimensions; whereas, for large throat dimensions, according to experiences with the beneficial effect of large Reynolds numbers on the energy change in diffusers, an even slightly higher η_d can be obtained. That a small slenderness ratio promotes high η_d is, of course, well known (angle of divergence ϑ (fig. 1) = 6 to 8 is recomended).

The total pressure rise from the suction chamber on is computed at

$$p_a - p_o = (p_a - p_n) + (p_n - p_1) - (p_o - p_1) =$$

$$= \eta_d \frac{\gamma}{2g} c_o^2(\sigma^2 - \tau^2) + \frac{\sigma}{1+\mu} \frac{\gamma}{g} c_o^2 \left[\mu \frac{c_1}{c_o} + \alpha - \sigma\left(1 + \frac{\zeta}{2}\right)(1+\mu) \right] -$$

$$-\alpha^2 \left(\frac{\varphi_1}{\varphi_2}\right)^2 (p_e - p_o) = \varphi_1^2 (p_e - p_o) \left[\frac{2\sigma}{1+\mu} \left(\mu \frac{c_1}{c_o} + \alpha - \sigma\left(1 + \frac{\zeta}{2}\right) \times \right.\right.$$

$$\left.\left. \times (1+\mu) \right) + \eta_d (\sigma^2 - \tau^2) - \left(\frac{\alpha}{\varphi_2}\right)^2 \right] \qquad (28)$$

or, as it may also be written,

$$\mu \left[\frac{p_a - p_o}{\varphi_1^2 (p_e - p_o)} - 2\sigma \frac{c_1}{c_o} + 2\sigma^2 \left(1 + \frac{\zeta}{2}\right) - \eta_d (\sigma^2 - \tau^2) + \left(\frac{\alpha}{\varphi_2}\right)^2 \right] =$$

$$= 2\sigma\alpha - 2\sigma^2 \left(1 + \frac{\zeta}{2}\right) + \eta_d (\sigma^2 - \tau^2) - \left(\frac{\alpha}{\varphi_2}\right)^2 - \frac{p_a - p_o}{\varphi_1^2 (p_e - p_o)}$$

This yields, for the quantity ratio, the relation

$$\mu = \frac{q - 2\sigma\alpha}{2\sigma \frac{c_1}{c_o} - q} \qquad (29)$$

where $q = \sigma^2(2 + \zeta - \eta_d) + \eta_d \tau^2 + \left(\frac{\alpha}{\varphi_2}\right)^2 + \frac{p_a - p_o}{\varphi_1^2(p_e - p_o)}$

This more accurate equation (wherein the term with τ is usually negligible) replaces equation (4) and forms the basic equation for the practical calculation of jet pumps. To find the best conditions for predetermined pressures p_e, p_o, and p_a, first choose a value for α with discretion; then compute μ for different $\sigma = 0.1$, 0.2, 0.3, etc., according to equation (29), which becomes a minimum at a certain σ. The same process is then repeated for other chosen values of α. In this manner the most favorable α and σ for minimum μ are obtained, as illustrated in figure 5, which gives such curves for $(p_a - p_o)/(p_e - p_o) = 1/4$. The best α computed, according to equation (14) is seen to be in fairly close agreement with that obtained from equation (29)(figs. 2 and 5).

Since the value of μ, on approaching optimum, changes very slowly, it is advisable to select the σ and especially the α values a little below the optimum insofar as it causes no appreciable increase in μ, since then the jet pump remains more favorable under diverging operating conditions, especially by greater delivery volumes.

Through value σ the narrowest section of the mixing nozzle itself is defined according to

$$F_m = \frac{G_2(1 + \mu)}{\sigma c_o \gamma} \tag{30}$$

The efficiency η_d of a jet pump is, as before, computed by equation (6). In figure 6 the efficiencies obtainable under optimum conditions (along with the pertinent σ and μ) are shown plotted against the pressure ratio $(p_a - p_o)/(p_e - p_o)$ (the values of φ_1, φ_2, and η_d used as a basis were assumed quite unfavorable, so that still better η_d usually can be achieved).

b) Gas and Steam Jet Pumps

In elastic mediums the solution of the problem requires the equation of state, which, however, is much too involved for vapors to be employed in its exact form in the equation of flow.

On the other hand, the elementary equation

$$p\ v = C(i - K) \tag{31}$$

(i heat content, C and K constants) has proved to be a very close approximation which even for steam affords a correct exposition of the relations within a wide range of state (reference 1). It can be used for gas equally well by putting $i = c_p\ T$, $K = 0$, and $C = R/c_p$ (R gas constant (mkg/kg°)).

In the compression of a mixture of driving and delivered steam the starting point I and the end point II of the compression line, and hence the pressures p_I, p_{II}, as well as the specific volumes v_I, v_{II}, are known, so that

$$p_I\ v_I = C(i_I - K)$$

$$p_{II}\ v_{II} = C(i_{II} - K)$$

whence constants C and K at

$$C = \frac{p_{II}\ v_{II} - p_I\ v_I}{i_{II} - i_I} \quad \text{(mkg/kcal)} \tag{32}$$

$$K = \frac{i_I - i_{II}\dfrac{p_I\ v_I}{p_{II}\ v_{II}}}{1 - \dfrac{p_I\ v_I}{p_{II}\ v_{II}}} \quad \text{(kcal/kg)} \tag{33}$$

The pressure rise as far as the end of the narrowest section of the mixing nozzle (likewise on the assumption of constant pressure p_1 from orifice of actuating nozzle to entry in narrowest point) can be computed with equations (22) to (26). Hence

$$\left(\mu\ \frac{c_1}{c_0} + \alpha\right) c_0 - (1 + \mu)\left(1 + \frac{\zeta}{2}\right) c_n = \frac{F_m}{G_2}\ g(p_n - p_1) \tag{34}$$

The continuity equation gives, according to equation (31)

$$p_n = \frac{C(i_n - K)}{v_n} = C(i_n - K)\frac{G_1 + G_2}{F_m\ c_n} = C(i_n - K)\frac{1 + \mu}{c_n}\frac{G_2}{F_m} \quad (35)$$

and the energy equation

$$G_1 i_e + G_2\ i_o = (G_1 + G_2)\left[i_n + \left(\frac{c_n}{91.5}\right)^2\right] \quad \text{or}$$

$$i_n = i_e - \frac{i_e - i_o}{1 + \mu} - \left(\frac{c_n}{91.5}\right)^2 \quad (36)$$

or, after introducing equations (35) and (36) into equation (34):

$$\frac{F_m}{G_2} = \frac{C}{c_n\ p_1}\left\{(1 + \mu)\left[i_e - K - \left(\frac{c_n}{91.5}\right)^2\right] - (i_e - i_o)\right\}$$

$$- \frac{1}{g\ p_1}\left[c_o\left(\mu\frac{c_1}{c_o} + \alpha\right) - (1 + \mu)\left(1 + \frac{\zeta}{2}\right)c_n\right] \quad (37)$$

Then the pressure p_n follows from equation (34) at

$$p_n = p_1 + \frac{G_2}{F_m}\frac{1}{g}\left[\left(\mu\frac{c_1}{c_o} + \alpha\right)c_o - (1 + \mu)\left(1 + \frac{\zeta}{2}\right)c_n\right] \quad (38)$$

with the value of G_2/F_m defined by equation (37). The point in the i,s chart corresponding to the state of the mixture at the end of the mixing nozzle is defined by pressure p_n and heat content i_n. For the subsequent compression in the diffuser along the compression line I-II (fig. 4) the adiabatic compression gradient H_K'' follows at

$$H_K'' = \eta_d\frac{c_n^2 - c_a^2}{91.5^2} \quad (39)$$

where $c_a = \tau c_o$ is usually negligible. Plotting this H_K'' in the i,s chart, starting from p_n, i_n, vertically upward, places the end point on the pressure line p_a'', thus making p_a'' the highest obtainable end pressure, which, for reasons of safety, should properly be a little below the prescribed end pressure p_a.

While the i,s chart is recommended for computing the end pressure p_a'', the determination of the most favorable conditions proceeds from a different angle: with adiabatic change of state the first principal heat law (with considerations of equation (31)) reads:

$$di = A\ v\ dp$$

$$= A\,C\,(i - K)\,\frac{dp}{p} \tag{40}$$

which, integrated, gives the adiabatic pressure rise from p_n to p_a''

$$p_a'' = p_n\left(\frac{i_a' - K}{i_n - K}\right)^{\frac{1}{AC}} = p_n\left(\frac{i_n - K + H_K''}{i_n - K}\right)^{\frac{1}{AC}} = p_n\,\Phi \tag{41}$$

with

$$\Phi = \left(1 + \frac{H_K''}{i_n - K}\right)^{\frac{1}{AC}} \approx 1 + \frac{H_K''}{AC(i_n - K)}\left(1 + \frac{1 - AC}{2\ AC}\,\frac{H_K''}{i_n - K}\right)$$

equation (36) being applicable to i_n and equation (39) to H_K''.

If $p_a'' = p_a$, it gives, with consideration to equations (37) and (38),

$$p_a = \left[p_1 + p_1\,\frac{\left(\mu\,\frac{c_1}{c_o} + \alpha\right)c_o - (1 + \mu)\left(1 + \frac{\zeta}{2}\right)c_n}{\frac{Cg}{c_n}\left\{(1+\mu)\left[i_e - K - \left(\frac{c_n}{91.5}\right)^2\right] - \left(i_e - i_o\right)\right\} - \left[c_o\left(\mu\,\frac{c_1}{c_o} + \alpha\right) - (1+\mu)\left(1 + \frac{\zeta}{2}\right)c_n\right]}\right]\Phi$$

From it follows:

$$\mu = \frac{\left(\frac{1}{\Phi}\,\frac{p_a}{p_1} - 1\right)r + s}{\left(\frac{1}{\Phi}\,\frac{p_a}{p_1} - 1\right)r' + s'} \tag{42}$$

where

$$r = \frac{C\,g}{\sigma\,c_o^2}\left[i_o - K - \left(\frac{c_n}{91.5}\right)^2\right] + \left(1 + \frac{\zeta}{2}\right)\sigma - \alpha,$$

$$r' = \frac{C\,g}{\sigma\,c_o^2}\left[i_e - K - \left(\frac{c_n}{91.5}\right)^2\right] - \left(1 + \frac{\zeta}{2}\right)\sigma + \frac{c_1}{c_o},$$

$$s = \left(1 + \frac{\zeta}{2}\right)\sigma - \alpha,$$

$$s' = \frac{c_1}{c_o} - \left(1 + \frac{\zeta}{2}\right)\sigma,$$

$$\frac{c_1}{c_o} = \sqrt{1 + \frac{\alpha^2}{1 + \epsilon}\left(\frac{\varphi_1}{\varphi_2}\right)^2} \tag{11}$$

With this equation the values of $\alpha = \frac{c_2}{c_o}$ and $\sigma = \frac{c_n}{c_o}$ at which μ becomes minimum for given p_e, p_o, and p_a can be computed. Since μ is also contained in the expression Φ (because of i_n) an approximate method is here also preferable. According to equation (14) the most favorable value of α and the pertinent μ can be closely approximated. Since the influence of μ on Φ is subordinate, it is for the present advisable to use the μ obtained for the most favorable α in equation (14) to compute Φ. Then the corresponding exact values of μ must be computed according to equation (42) for different values of $\sigma = \frac{c_n}{c_a}$ (with σ = 0.1, 0.2, 0.3, etc.) from which the σ and c_n most favorable for minimum μ are obtained. If desired, this calculation may be repeated for other values of α so as to complete the determination of the optimum conditions. Again it is advisable to have α and σ a little smaller than the minimum value of μ. The narrowest section F_m of the mixing nozzle is defined by equation (37).

For steam the determination of the best conditions (i.e., of α and F_m) should, for safety's sake, be followed by a check on the pressure rise without resorting to the approximate equation (31). The pressure p_n can

be computed according to equation (34), i_n according to equation (36), and the end pressure p'' according to (39).

At this point it should be stated that the foregoing relations evolved for gas and steam are not valid under any and all conditions. For, so far, it had been tacitly assumed that propellant and delivery are able to flow directly at orifice pressure p_1 in the throat from the computed optimum section F_m. While this is the case for fluids, it is limited for gas and steam if the actuating jet has supersonic velocity, since then the required section can increase with decreasing pressure p_1. Then the intake section F_1 at the actuating nozzle orifice has a minimum $F_{1_{min}}$ at a certain orifice pressure p_1, and the previously developed equations obviously hold true only so long as the computed optimum F_m is not less than the value $F_{1_{min}}$. If $F_m < F_{1_{min}}$ a pressure rise must necessarily occur in the intake, which, of course, shall be small until the narrowest section is reached. As a result of such pressure rise in the tapered intake, the impulse equation in the simple form of equation (22) is no longer applicable. However, we shall not go into this at present.

The determination of $F_{1_{min}}$ proceeds from the general equation

$$F_1 = f_1 + f_2 = \frac{G_1}{c_1 \gamma_1} + \frac{G_2}{c_2 \gamma_2}$$

where, as previously,

$$c_1 = \varphi_1 \; 91.5 \sqrt{H_1} \; ;$$

$$c_2 = \varphi_2 \; 91.5 \sqrt{H_2}$$

The values of H_1, H_2, γ_1, and γ_2 for different orifice pressures p_1 are read off the i,s chart, and F_1 is computed. These values plotted against p_1 then afford $F_{1_{min}}$.

If no i,s chart is available, the adiabatic change of state follows from the generalized equation (41) at

$$p_e = p_1 \left(\frac{i_e - K}{i_e - K - H_1} \right)^{\frac{1}{AC}}$$

$$p_o = p_1 \left(\frac{i_o - K}{i_o - K - H_2} \right)^{\frac{1}{AC}}$$

Consequently,

$$H_1 = (i_e - K) \left[1 - \left(\frac{p_1}{p_e} \right)^{AC} \right]$$

$$H_2 = (i_o - K) \left[1 - \left(\frac{p_1}{p_o} \right)^{AC} \right]$$

Furthermore, the relations

$$\frac{1}{\gamma_1} = \frac{C(i_1 - K)}{p_1} = \frac{C}{p_1} \left[i_e - \varphi_1^2 H_1 - K \right]$$

$$\frac{1}{\gamma_2} = \frac{C}{p_1} \left[i_o - \varphi_2^2 H_2 - K \right]$$

exist. From these the value of F_1 can be computed equally well and its minimum ascertained.

In conclusion, it is pointed out that the equations developed for steam are directly applicable to gas, when $i = c_p T$, $K = 0$, and $C = \frac{R}{c_p}$.

c) Optimum Shape of Inlet of Mixing Nozzle

On computing along the foregoing arguments the best values of α and σ for any newly projected jet pump design, it is invariably found that the section F_1 of the inlet at the end of the actuating nozzle is equal to the narrowest section F_m of the mixing nozzle, hence that in the best possible designed jet pumps the actuating nozzle

empties directly into the throat of the mixing nozzle, thus eliminating the intermediate piece termed "inlet" in figure 1. As a generally valid fact is obviously involved, it should be amenable to a general proof. This proof is adduced herewith.

In the preceding developments it had been assumed that, by arbitrarily assumed ratio $\alpha = c_2/c_0$, the pressure between orifice of actuating jet and beginning of narrowest section should be $p = p_1 = \text{const}$. In that case the mixing nozzle must have a very definite sectional aspect with respect to the distance from the actuating nozzle orifice which can be computed according to the arguments advanced under III and for fluids affords a continuous sectional reduction (fig. 7, line I), as is usually the case for gas and steam. However, if the gradients are very great, that is, at supersonic speeds, an increase in cross section must exist (solid line I, fig. 8) even despite $p = \text{const}$ on account of the material increase in specific volume as a result of internal heating (because of energetic turbulence). The effect of change of inlet under otherwise constant conditions, that is, constant terminal nozzle pressure p_1, hence c_1, c_2, intake section F_1, narrowest section F_m, and quantities G_1 and G_2, is analyzed. Since, on this assumption, the energy change in the difference is always the same, the obtainable end pressure p_a either rises or drops with the pressure p_n at the end of the narrowest point, depending upon the quality of the intake. But the impulse theorem discloses the conditions under which p_n becomes maximum. Naturally the previous assumption of $p = p_1 = \text{const}$ over the inlet must be dropped in these variation considerations.

In analyzing the conditions according to figure 7 with an inlet boundary conformable to the dashed line II or III, that is, where, between actuating nozzle orifice and beginning of narrowest section, the pressure is not $p = p_1 = \text{const}$, as on line I, the mean pressure along the intake nozzle is, say, p_m (it may be higher or lower than p_1). Then the impulse equation gives

$$\frac{G_1}{g} c_1 + \frac{G_2}{g} c_2 + F_1 p_1 = \frac{G_1 + G_2}{g} c_n + F_m p_n + (F_1 - F_m) p_m$$

whence a pressure at the end of the narrowest point of

$$p_n = \frac{1}{F_m}\left[\frac{G_1}{g} c_1 + \frac{G_2}{g} c_2 - \frac{G_1 + G_2}{g} c_n + F_1 p_1 - (F_1 - F_m)\ p_m\right] \quad (43)$$

Nothing is changed on the right-hand side of this equation except p_m, and even then it can be seen that p_n (hence p_a) becomes so much higher as the mean pressure p_m is lower.

Proceeding from the nozzle boundary I (fig. 7) (pressure variation $p = p_1$ = const), it is readily seen that with boundary II, that is, lengthened intake, the longer mixing path as far as the beginning of the narrowest section has already caused a more or less pronounced pressure rise, and the mean pressure along the intake must therefore be $p_m > p_1$. Inversely, with nozzle boundary III, that is, with a shorter nozzle than form I, the pressure p_1 cannot have as yet been reached again at the beginning of the narrowest section because of the shorter mixing path (the steeper contraction of the intake forces a pressure drop behind the actuating nozzle); hence the mean pressure in the intake must be $p_m < p_1$. This is the most favorable of all comparative cases according to equation (43) because here p_n (and consequently p_a) becomes highest. The mean pressure p_m is obviously so much lower as the intake is shorter; hence the conditions are most favorable when the intake is made as short as possible. Since, in that case, the effect of the mixing motion is insignificant because of the shortness of this length, the conditions are practically as if actuating jet and delivered medium flowed side by side and without friction into the throat or as if the actuating nozzle reached directly as far as the throat.

At the same time, it is apparent that whether the actuating nozzle actually reaches to the throat or ends before reaching it must be quite secondary, provided the distance between the end of the actuating nozzle and the start of the narrowest section is as short as possible. It further follows that with a short intake the inflow velocity c_2 itself is of secondary importance and that it solely depends upon the correct throat dimensions, for with a short intake the pressure at the start of the narrowest point is, in all cases, such as if the actuating nozzle extended as far as the throat.

Mention should be made at this point of several secondary effects disregarded in the foregoing which may have some bearing on the quality of a jet pump. These are

1) The streamline curvature caused by the round wall of the mixing nozzle in longitudinal section. Since the streamlines are slightly convex toward the axis, the centrifugal forces produce a small decrease in wall pressure and hence of p_m, which is beneficial; but, on the other hand, the raised pressure level toward the actuating jet causes at the same time a slight increase in the difference between c_1 and c_2 at the contact area, which is unfavorable.

2) The slope of the inflow velocity c_2 toward the axis, which is always somewhat detrimental, even if of minimum importance numerically.

3) The disturbance of the axially symmetrical state of flow, which is most beneficial for the conversion of energy, by incorporating several actuating nozzles instead of one. Setting the actuating nozzles obliquely toward the axes causes further deleterious secondary effects (especially in gas and steam at high supersonic velocities). Lastly, there is the danger of the outside actuating jets hugging the wall of the mixing nozzle, involving serious harm to the pressure rise. For this reason the mounting of even a single actuating nozzle demands accurate axial and centrical setting with respect to mixing nozzle and diffuser.

The consequence of these secondary effects on the mixing process between actuating and delivered fluid is that a definite optimum is usually obtainable for a given actuating nozzle and a mixing nozzle by changing their axial distance (that is, the intake length). The conditions are wholly unequivocal when the actuating nozzle empties directly into the narrowest section and the inflow is hydrodynamically unobjectionable in the sense of a steady acceleration and axial direction of inflow, whereby, of course, the wall thickness at the end of the actuating nozzle should be a minimum. From the remarks under 3) it further follows that one actuating nozzle is preferable over several nozzles where the only advantage is that the length of the mixing nozzle can be made less in order to achieve the same degree of mixing.

Considering shapes shown in figure 8: it is readily apparent that for liquids a contraction of the intake con-

forming to figure 8 cannot be detrimental unless the throat has the optimum width. If, for gas or steam jet pumps at pressure $p = p_1 = \text{const}$, the section for the intake decreases continuously (fig. 7) with increasing distance from the end of the actuating nozzle, the viewpoint regarding the most appropriate shape of intake remains the same as for liquids. But if the intake at $p = p_1 = \text{const}$ manifests a contraction conforming to figure 8, the conditions are different. Then the value for p_n at the end of the throat is, according to the impulse theorem, the same as if the throat already commenced at B instead of A, whence the contraction is superfluous. Furthermore, the impulse theorem would obviously give a higher value for p_n if the transition to the throat downstream from the contraction were made longer, resembling line II, because then the mingling of the jet would necessarily have to induce a pressure rise in this piece, hence the mean wall pressure would be higher. This influence is so much more marked as line II is flatter and would be most potent if the contraction were followed by a cylindrical piece of pipe of equation section F_m' (line III). Then, however, the width F_m shown in figure 8 can no longer be the most favorable, but it is better if the best width never exceeds F_m', although it may very well be smaller than the latter. The latter possibility involves actuating jets with high supersonic speed and a case already mentioned in a different connection and discussed elsewhere.

As long as the inflow in the throat is possible without pressure rise, the speed $c_2 = \alpha\, c_0$ of the delivered medium at the beginning of the narrowest section is decisive with correctly designed intake, according to the foregoing arguments. Hence, let us assume, for simplicity that the actuating nozzle empties directly into the throat. Then, as will become readily apparent, the choice of value α is not arbitrary but must be in a definite relationship to σ and μ. Thus, for liquids:

$$F_m = \frac{G_1}{c_1\,\gamma} + \frac{G_2}{c_2\,\gamma} = \frac{G_2}{c_1\,\gamma}\left(\mu + \frac{1}{\alpha}\right)$$

where

$$c_1 = c_0\sqrt{1 + \alpha^2\left(\frac{\varphi_1}{\varphi_2}\right)^2}$$

Since, moreover:

$$F_m = \frac{G_1 + G_2}{c_n \gamma} = \frac{G_2}{c_n \gamma} \frac{1 + \mu}{\sigma}$$

it follows that:

$$\frac{1}{\alpha} = \frac{1 + \mu}{\sigma} \sqrt{1 + \alpha^2 \left(\frac{\varphi_1}{\varphi_2}\right)^2} - \mu \tag{44}$$

The method of predicting the best point then would probably consist of introducing the pertinent values of σ and α of the best point provisionally obtained from equation (4) for an arbitrarily selected $\sigma = c_n/c_o$ on the right-hand side of equation (44). Then the exact value of α would be written in equation (29), from which the accurate value of μ for the selected σ is obtained. The calculation is repeated with the accurate α and μ until satisfactory agreement prevails between the momentarily expressed and computed values of α and μ. These computations should be carried out for a sufficient number of σ values from which then the best σ for a minimum μ is obtained.

The relations for α can be evolved equally well for gas and steam. But the connections are so involved that it is simpler to define the best point by the method described under II, b.

III. CALCULATION BASED UPON THE DRAGGING EFFECT OF THE ACTUATING JET

The calculation method described under II, which is in part based on the simpler method developed under I, still has the drawback of failing to give any data on the length conditions. This defect is eliminated in the subsequent developments with the introduction of the effective dragging force between actuating jet and entrained jet. To simplify the calculation, it is assumed that at any point both the speed c_1 over the actuating jet section f and the speed c_1 over section $F - f$ (F section of mixing nozzle and of diffuser, respectively (fig. 9)) are constant, although in reality the speed is quite

nonuniformly distributed because of the mass exchange and the continuous change in the type of distribution (c_1 and c_2 have now a different meaning)*. The effective dragging force dP in a little piece dO of the boundary surface between actuating and entrained jet is (c.f., Hydraulic Problems, Berlin: VDI, publisher, 1926, p. 135. In the cases discussed therein $c_2 = 0$):

$$dP = \chi \frac{\gamma}{2g} (c_1 - c_2)^2 \, dO \quad (kg) \tag{45}$$

where χ is a kind of friction coefficient, which, according to recent findings, averages $\chi \approx 0.10$. In the following the value of χ is assumed constant, although it undoubtedly varies a little similarly to the coefficient of wall friction λ. With these simplifications the energy conversion computed on this basis will, of course, not be in complete agreement with the actual course of energy change; whereas, the total conversion is naturally in accord with the calculation effected under II. The justification of the theorem conforming to equation (45) is based on the following simple argument: In turbulent mixing motion the apparent shearing stress τ between two side-by-side fluid layers of different speed (speed difference Δc) (reference 2) is

$$\tau = \frac{\gamma}{g} v \, \Delta c \quad (kg/m^2)$$

where v is mean mixing speed, which according to Prandtl's turbulence theorem is

$$v = \Delta c \times \text{const} = \Delta c \frac{\chi}{2}$$

With these relations and $\Delta c = c_1 - c_2$, the dragging force follows at

$$dP = \tau \, dO$$

exactly as in equation (45).

Since jet pumps involve turbulent mixing processes,

---

*As is known, the impulse is always greater by nonuniform velocity distribution than if in the same section at the same flow velocity the same velocity distribution existed.

it might be presumed that the processes would yield to treatment according to Prandtl's well-known theorem for turbulent mixing flows. But the mathematical difficulties are so great that his theorem would hardly yield a useful method for practical cases.

a) Jet Pumps for Liquids

Examination at any point of the mixing nozzle or diffuser, respectively, of a small section of length dx from the actuating and the entrained jet (fig. 9) shows that the velocities change by dc_1, dc_2, and the pressure by dp. Then the application of the impulse theorem to the actuating and then to the entrained jet gives, with allowance for the inner wall friction dW:

$$\frac{G_1}{g}\,dc_1 + f\,dp + dP = 0 \tag{46a}$$

$$\frac{G_2}{g}\,dc_2 + (F - f)dp - dP + dW = 0 \tag{46b}$$

Dividing the first of these equations* by f and the second by $(F - f)$, followed by subtraction of the last equation from the first, leaves

$$\frac{G_1}{g\,f}\,dc_1 - \frac{G_2}{g(F - f)}\,dc_2 + dP\left(\frac{1}{f} + \frac{1}{F - f}\right) - \frac{dW}{F - f} = 0 \tag{46'}$$

Since

$$\left.\begin{aligned} G_1 &= f\,c_1\,\gamma \\ G_2 &= (F - f)\,c_2\,\gamma \end{aligned}\right\} \tag{47}$$

according to the equations of continuity, equation (46') gives

$$\frac{c_1}{g}\,dc_1 - \frac{c_2}{g}\,dc_2 - dP\left(\frac{c_1}{G_1} + \frac{c_2}{G_2}\right) - \frac{dW}{(F - f)\gamma} = 0 \tag{47'}$$

---

*In reality the impulses for nonuniform velocity distribution are, as already pointed out, slightly greater than for the assumed uniform distribution; but this effect is disregarded, as previously stated.

By introduction of the relation for dP according to equation (45), followed by equating

$$dW = \lambda \frac{\gamma}{2g} c_2^2 \, U \, dx \tag{48}$$

similarly to equation (23). (with $U = 2\sqrt{\pi F}$ denoting the wetted perimeter of the assumedly circular section F) while observing that

$$F = \frac{G_1}{c_1 \gamma} + \frac{G_2}{c_2 \gamma}$$

$$F - f = \frac{G_2}{c_2 \gamma}$$

and with equations(47) and (48) becomes

$$\frac{dW}{(F - f)\gamma} = \lambda \, 2\sqrt{\frac{\pi}{F}} \frac{F}{F - f} \frac{c_2^2}{2g} dx$$

$$= 2\lambda \sqrt{\frac{\pi}{F}} \left(\mu \frac{c_2}{c_1} + 1\right) \frac{c_2^2}{2g} dx$$

the previous equation, (47'), can be written in the form

$$\frac{c_1}{g} dc_1 - \frac{c_2}{g} dc_2 + \chi \frac{\gamma}{2g} (c_1 - c_2)^2 \left(\frac{c_1}{G_1} + \frac{c_2}{G_2}\right) dO - m \, dx = 0 \tag{49}$$

where $$m = \frac{\lambda}{g} \sqrt{\frac{\pi}{F}} \left(\mu \frac{c_2}{c_1} + 1\right) c_2^2$$

The section of the actuating jet divided over, say, z actuating nozzles, is

$$f = z \frac{(d')^2 \pi}{4} = \frac{G_1}{c_1 \gamma}$$

hence the diameter of the individual actuating jet

$$d' = \sqrt{\frac{4 G_1}{\pi z' c_1 \gamma}}$$

where for the present $z' = z$ behind the acuating jet and

the estimated length $z' = 1$, which allows for the gradual confluence of the jets when several actuating jets are involved. The area of contact of the actuating with the entrained jet is put at

$$dO = z'\pi d'dx = 2\sqrt{\frac{\pi z' G_1}{c_1 \gamma}}\, dx \tag{50}$$

Since, in addition, for G_1 and G_2 according to (47):

$$c_2 = \frac{G_2\, c_1}{F\, c_1\gamma - G_1} \tag{51}$$

or, differentiated,

$$dc_2 = \frac{(F\, c_1\, \gamma - G_1)G_2 dc_1 - G_2\, c_1\, \gamma(F\, dc_1 + c_1\, dF)}{(F\, c_1\, \gamma - G_1)^2}$$

$$= -\frac{G_1\, G_2\, dc_1 + G_2\, c_1^{\,2}\, \gamma\, dF}{(F\, c_1\, \gamma - G_1)^2} \tag{52}$$

equation (49) takes the form

$$c_1 dc_1 + \frac{G_1 G_2^{\,2} c_1 dc_1 + G_2^{\,2} c_1^{\,3}\gamma\, dF}{(F\, c_1\gamma - G_1)^3} + \chi\sqrt{\frac{\pi\, z'\, \gamma}{G_1}}\ \times$$

$$\times c_1^{\,2.5}\left[1 - \frac{G_2}{F\, c_1\gamma - G_1}\right]^2\left[1 + \frac{G_1}{F\, c_1\gamma - G_1}\right] dx - gmdx = 0 \tag{52'}$$

or, if all summands are brought to the same denominator $(F\, c_1\gamma - G_1)^3$:

$$\frac{(Fc_1\gamma - G_1)^3 + G_1 G_2^{\,2} + G_2^{\,2} c_1^{\,2}\gamma\, \frac{dF}{dc_1}}{F\gamma\, c_1^{\,2.5}[Fc_1\gamma - (G_1 + G_2)]^2}\, dc_1 = (K_1 - K_2)dx \tag{53}$$

whereby

$$K_1 = \chi\sqrt{\pi z'\, \frac{\gamma}{G_1}}\,;$$

$$K_2 = \frac{\lambda\sqrt{\pi}}{\sqrt{F\, c_1}}\left(\frac{G_2}{F\, c_1\gamma - (G_1 + G_2)}\right)^2$$

$$= \lambda\sqrt{\pi}\sqrt{\frac{\gamma}{G_1 + G_2}}\left(\frac{G_2}{G_1 + G_2}\right)^2\left(\frac{\rho}{1 - \rho}\right)^2\sqrt{\rho}\,;$$

$$\rho = \frac{G_1 + G_2}{F\ c_1 \gamma}$$

Equation (53) also can be written as a difference equation

$$\Delta x \left[K_1 - K_2 + \frac{G_2{}^2 \gamma \frac{dF}{dx}}{F\ \gamma \sqrt{c_1} [F\ c_1 \gamma - (G_1 + G_2)]^2} \right]$$

$$= - \Delta c_1 \frac{(F\ c_1\ \gamma - G_1)^3 + G_1\ G_2{}^2}{F\ \gamma\ c_1{}^{2.5} [F\ c_1\ \gamma - (G_1 + G_2)]^2}$$

With this equation the flow conditions can be progressively defined for a certain mixing nozzle and a given initial state, the stage Δx being determined occasionally for an assumed change Δc_1.

The term K_2 in equation (53) generally indicates a small correction quantity, which in first approximation could be disregarded, and in the integration the term for K_2 can be dealt with as a constant, while for ρ the mean value for the momentary path of integration is approximated. Notwithstanding this simplification, equation (53) is not solvable in a general manner; although the solution for various important practical cases can be found.

1. Mixing of jet at constant pressure.- Suppose that, as before, the mixing from the orifice of the actuating jet to the start of the narrowest point of the mixing nozzle takes place at constant pressure p_1. Instead of equation (53), the relation here is simpler because of the entry of the differential $dp = 0$ in equations (46a) and (46b). Equation (46a) with equations (45) and (50) give:

$$\frac{G_1}{g}\ dc_1 + \sqrt{\pi z'}\ \frac{\chi}{g} \sqrt{\frac{G_1\ \gamma}{c_1}}\ (c_1 - c_2)^2\ dx = 0 \tag{54}$$

while the addition of equations (46a) and (46b) with regard to equation (48) give

$$\frac{G_1}{g}\ dc_1 + \frac{G_2}{g}\ dc_2 = - \lambda \frac{\gamma}{g} \sqrt{\pi\ F}\ c_2{}^2\ dx \tag{55}$$

Here the term on the right-hand side is again a correction term of secondary significance, from which an average value, say

$$\lambda \frac{\gamma}{g} \sqrt{\pi F}\, c_2^2 \simeq \lambda \frac{\gamma}{g} \sqrt{\pi}\, c_{20}\, c_{2x} \sqrt[4]{F_o\, F_x}$$

may be used in the integration. Here F_o is the section of the mixing nozzle in the plane of the actuating nozzle and (reference section) and F_x of the section of the mixing nozzle at distance x from the tip of the actuating nozzle. The corresponding velocities of the actuating jet are c_{1o} and c_{1x}, the velocities of the entrained jet c_{2o} and c_{2x}. (These notations apply exclusively to the case 1 treated here.)

Then the integration of equation (55) gives

$$c_{2x} = \frac{1}{1 + k\, x \sqrt[4]{F_x/F_o}} \left[c_{2o} + \frac{G_1}{G_2} (c_{1o} - c_{1x}) \right] \tag{56}$$

with

$$k = \lambda \sqrt{\pi}\, \frac{\gamma\, c_{2o}}{G_2} \sqrt{F_o}$$

which, inserted for $c_{2x} = c_2$ in equation (54) (whereby $c_1 = c_{1x}$) takes the form

$$- \frac{\sqrt{c_1}\, dc_1}{[a\, c_1 - b]^2} \doteq K_1 dx \tag{57}$$

where K_1 represents the same quantity as in equation (53) and

$$a = 1 + \frac{G_1/G_2}{1 + k\, x \sqrt[4]{F_x/F_o}}$$

$$b = \frac{c_{2o} + c_{1o}\, G_1/G_2}{1 + k\, x \sqrt[4]{F_x/F_o}}$$

Again quantities a and b can, because of the minor effect of the term with k be treated as constants

in the integration; that is, substitute the mean value of F in the pertinent integration path x, so that

$$K_1x = \frac{1}{a^2}\left[\frac{\sqrt{c_{1x}}}{c_{1x}-b/a} - \frac{\sqrt{c_{10}}}{c_{10}-b/a}\right] + \frac{\sqrt{a/b}}{2a^2}\ln\frac{(\sqrt{c_{1x}}+\sqrt{b/a})(\sqrt{c_{10}}-\sqrt{b/a})}{(\sqrt{c_{1x}}-\sqrt{b/a})(\sqrt{c_{10}}+\sqrt{b/a})} \tag{58}$$

The best way to use this equation is to introduce different values for c_{1x} and to determine the corresponding x. Then the pertinent section of the mixing nozzle is

$$F_x = \frac{G_1}{c_{1x}\gamma} + \frac{G_2(1 + k\,x\,\sqrt[4]{F_x/F_0})}{\left[c_{20} + (c_{10} - c_{1x})\dfrac{G_1}{G_2}\right]\gamma} \tag{59}$$

while the correlated velocity ratio c_{2x}/c_{1x} is obtained from equation (56). In general, it can be proved that the section F_x must decrease as the distance from the nozzle orifice increases, so long as the wall friction remains of subordinate influence, as is always the case along the intake.

The intake piece of the mixing nozzle ends where F_x becomes equal to the best narrowest section F_m obtained according to II, b.

It is advisable to carry out first a calculation without regard to the wall friction with $k = 0$, so as to obtain a safe starting point for the more accurate calculation of x and F_x contained in the last term of equation (59) and in the expressions a and b, if the minor wall friction effect is being considered at all.

As the onset of mixing in the intake is always accompanied by very uniform mixing vortices (fig. 10) the correct χ value at this point may possibly diverge more from the previous value 0.1, since the latter refers to the case of uncontrolled intermingling.

2. Mixing of jet by constant section F.- This case is important for computing the flow conditions in the narrowest point of the mixing nozzle of section $F = F_m$. Its solution makes it possible to ascertain the degree of mixing of actuating and delivered fluid in relation to the length of the narrowest section. The better the mixing the closer the

velocity ratio c_2/c_1 approaches the value 1. The ratio c_2/c_1 at entry in the narrowest section is already known from an earlier calculation.

In equation (53) K_2 is again treated as constant. If, temporarily,

$$v = \sqrt{\frac{G_1 + G_2}{F\ c_1\ \gamma}}, \quad c_1 = \frac{G_1 + G_2}{F\ \gamma\ v^2}$$

equation (53) (with allowance for the fact that now $\frac{dF}{dc_1} = 0$) appears in the form

$$\frac{(1 - k_1 v^2)^3 + k_3 v^6}{(1 - v^2)^2}\ dv = \frac{1}{2}\sqrt{\frac{G_1 + G_2}{F\ \gamma}}\ (K_1 - K_2)\ dx \qquad (60)$$

whereby

$$k_1 = \frac{G_1}{G_1 + G_2}; \qquad k_2 = \frac{G_2}{G_1 + G_2} = 1 - k_1;$$

$$k_3 = \frac{G_1\ G_2^2}{(G_1 + G_2)^3} = k_1\ k_2^2$$

The first term of the fraction is changed to

$$(1 - v^2)\left(\frac{1 - v^2 + k_2 v^2}{1 - v^2}\right)^3 + k_3\ \frac{v^6}{(1 - v^2)^2}$$

$$= (1 - v^2)\left[1 + \frac{3\ k_2\ v^2}{1 - v^2} + \frac{3\ k_2^2\ v^4}{(1 - v^2)^2} + \frac{k_2^3\ v^6}{(1 - v^2)^3}\right] + \frac{k_3\ v^6}{(1 - v^2)^2}$$

$$= 1 + v^2(3\ k_2 - 1) + \frac{3\ k_2^2\ v^4}{1 - v^2} + \frac{(k_2^3 + k_3)v^6}{(1 - v^2)^2}$$

In addition

$$
\begin{aligned}
v^4 &= 1 - (1 - v^4) \\
&= -(1 - v^2)(1 + v^2) + 1 \\
&= -(1 - v^2)[2 - (1 - v^2)] + 1; \\
v^6 &= -(1 - v^2)(1 + v^2 + v^4) + 1 \\
&= -(1 - v^2)[2 - (1 - v^2) + v^4] + 1 \\
&= -(1 - v^2)[3 - 3(1 - v^2) + (1 - v^2)^2] + 1
\end{aligned}
$$

after which the solution of the partial fractions gives

$$
\frac{1}{(1 - v^2)^2} = \frac{2 - v}{4(1 - v)^2} + \frac{2 + v}{4(1 + v)^2}
$$

whence

$$
\int_0^x \frac{(1 - k_1 v^2)^3 + k_3 v^6}{(1 - v^2)^2} dv
$$

$$
= \left[a_1 v - a_2 v^3 + \frac{a_3 v}{1 - v^2} + a_4 \ln \frac{1 + v}{1 - v} \right]_0^x
$$

with

$$
a_1 = k_1(1 + k_2) ;
$$

$$
a_2 = \frac{k_1}{3} (k_1 - k_2) ;
$$

$$
a_3 = \frac{k_2^2}{2} ;
$$

$$
a_4 = \frac{k^2_2}{4}
$$

Therewith the solution of equation (60) reads

$$(K_1 - K_2)\frac{\sqrt{c_{10}}}{2}\,x = a_1\left(\sqrt{\frac{c_{10}}{c_{1x}}} - 1\right) - a_2\,\rho_0\left[\left(\frac{c_{10}}{c_{1x}}\right)^{3/2} - 1\right) +$$

$$+ a_3\left[\frac{\sqrt{\frac{c_{10}}{c_{1x}}}}{1 - \rho_0\frac{c_{10}}{c_{1x}}} - \frac{1}{1 - \rho_0}\right] + \frac{a_4}{\sqrt{\rho_0}}\ln\frac{\left(1 + \sqrt{\rho_0\frac{c_{10}}{c_{1x}}}\right)(1 - \sqrt{\rho_0})}{\left(1 - \sqrt{\rho_0\frac{c_{10}}{c_{1x}}}\right)(1 + \sqrt{\rho_0})} \qquad (61)$$

Here and in the subsequent treatment of case 2:

c_{10} actuating jet velocity
c_{20} entrained jet velocity
} At entry in narrowest section of mixing nozzle (reference section)

c_{1x} velocity of actuating jet
c_{2x} velocity of entrained jet
} At x distance from reference section

$$K_1 = \chi\sqrt{\pi z'\frac{\gamma}{G_1}}$$

$$K_2 = \sqrt{\pi}\,\lambda\,k_2^2\sqrt{\frac{\gamma}{G_1 + G_2}}\left(\frac{\rho_m}{1 - \rho_m}\right)^2\sqrt{\rho_m}$$

$$\rho_m \approx \sqrt{\rho_0\,\rho_x}$$

$$\rho_0 = \frac{G_1 + G_2}{F\,\gamma\,c_{10}} \qquad \rho_x = \frac{G_1 + G_2}{F\,\gamma\,c_{1x}}$$

In equation (61) as in equation (58) the procedure is to assume different c_{1x}/c_{10} and compute the corresponding x. For a preliminary calculation it is expedient to put $K_2 = 0$ in order to obtain a sufficiently safe starting point for the more accurate prediction of ρ_m.

The velocity c_{2x} of the entrained jet is determined from equation (51) at

$$c_{2x} = \frac{G_2\,c_{1x}}{F\,\gamma\,c_{1x} - G_1}$$

The pressure rise $\Delta p = p - p_1$ in the narrowest point follows after addition of equations (46a) and (46b) from the relation

$$F\,dp = -\frac{G_1}{g}\,dc_1 - \frac{G_2}{g}\,dc_2 - dW \tag{62}$$

with

$$dW = \lambda\,\frac{\gamma}{2g}\,c_2^2\,dO = \lambda\sqrt{\pi\,F}\,\frac{\gamma}{g}\,c_2^2\,dx$$

for the secondary correction term dW according to equation (48) and

$$c_{2m}^2 \approx c_{20}\,c_{2x}$$

as accurately enough for the mean value of the velocities $c_2 = c_{2m}$ on the length x.

Then the integration of equation (62) gives

$$\Delta p = p_x - p_1 = \frac{G_1}{gF}\,(c_{10} - c_{1x}) - \frac{G_2}{gF}\,(c_{2x} - c_{20}) - \lambda\sqrt{\frac{\pi}{F}}\,\frac{\gamma}{g}\,c_{20}\,c_{2x}\,x \tag{63}$$

The progress of intermingling is apparent from the ratio c_{2x}/c_{1x}. At the end of the narrowest point (at x = L) this ratio has increased to around 0.7 to 0.8. Obviously the pressure rise Δp is so much greater as c_{2x}/c_{1x} approaches the value 1. That is, the more incompletely the velocity is equalized the smaller the pressure rise in the throat but at the same time the greater the impulse at entry in the diffuser. Although the pressure rise in the diffuser is somewhat greater as a result, the total pressure rise in relation to suction chamber pressure is nevertheless less than by better velocity equilization at the end of the narrowest point. Now, since a very good velocity compensation (i.e., c_{2x}/c_{1x} almost equals 1) calls for a very great length L of the narrowest section, which causes a fairly high frictional resistance, there is an optimum length that can be approximately computed from the total pressure rise by variation of L.

3. Pressure rise in the diffuser.- Solvable forms of equation (53) could be obtained for the flow in the diffuser with, for instance, the introduction of the secondary condition

$$F\, c_1\, \gamma = G_0 \left(\frac{c_{10}}{c_1}\right)^n$$

where $G_0 = F_m\, c_{10}\, \gamma$ and N indicate constants and for the exponent $n = 0$ or 1, 2, 3, etc. (The reference section F_0, in which the velocities c_{10} and c_{20} prevail, lies in this case 3 at the end of the narrowest section of the mixing cone, that is, at the start of the diffuser.) But, because of the very nonuniform velocity distribution c_2 over the section as a result of the break-away phenomena on the outside wall, this together with the influence of the continuous cross-sectional increase would lead to results markedly diverging from reality, since equation (53) is based on the assumption that c_1 and c_2 are uniformly distributed over the jet section. Hence it is preferable, even for nonuniform inflow velocities c_{10}, c_{20} to the diffuser (that is, with incomplete mingling) to compute the pressure rise with the help of the diffuser efficiency η_d in the following manner. (Since c_1 and c_2 are referred to diffuser entry only, subscript o can be omitted.)

The prediction of $c_1 = c_{10}$, $c_2 = c_{20}$ at the end of the narrowest point being possible conformably to the earlier case 2, the energy equation for the conversion in the diffuser can be written in the form

$$(G_1 + G_2)\, \frac{p_a - p_n}{\gamma} = \eta_d \left[\frac{G_1}{2g}\,(c_1^2 - c_a^2) + \frac{G_2}{2g}\,(c_2^2 - c_a^2)\right]$$

or

$$p_a - p_n = \eta_d\, \frac{\gamma}{2g}\left[\frac{\mu}{1+\mu}\,(c_1^2 - c_a^2) + \frac{1}{1+\mu}\,(c_2^2 - c_a^2)\right] \quad (64)$$

Obviously it is expected that with given diffuser the efficiency η_d is not of the same value under all conditions, but rather to be slightly dependent upon the speed ratio $\nu = \frac{c_2}{c_1}$ at the entry in the diffuser; η_d will drop perceptibly if ν becomes considerably less than 1.

Now if is of interest to compute the pressure rise

for incomplete mingling at entry in the diffuser at mean jet velocity

$$c_n = \frac{G_1 + G_2}{F_m \gamma} = \frac{G_1 + G_2}{G_1 + \frac{c_1}{c_2} G_2} c_1 = \frac{1 + \mu}{\mu + \frac{1}{\nu}} c_1 = \frac{1 + \mu}{1 + \mu \nu} c_2$$

instead of the actual jet velocities c_1, c_2. In distinction from equation (64), p_a' now indicates the terminal pressure and η_d' the diffuser efficiency. Then

$$p_a' - p_n = \eta_d' \frac{\gamma}{2g} (c_n^2 - c_a^2)$$

It is readily seen that the pressure rise for $\eta_d' = \eta_d$ would be different from what it formerly was. To obtain the same pressure rise as before, the diffuser efficiencies must be in the ratio:

$$\frac{\eta_d'}{\eta_d} = \frac{\mu(c_1^2 - c_a^2) + (c_2^2 - c_a^2)}{(1 + \mu)(c_n^2 - c_a^2)}$$

$$= \frac{\left(1 + \frac{\mu}{\nu^2}\right)(1 + \mu \nu)^2 - (1 + \mu)^3 \left(\frac{c_a}{c_n}\right)}{(1 + \mu)^3 \left[1 - \left(\frac{c_a}{c_n}\right)^2\right]} \tag{65}$$

or, by negligible discharge velocity c_a:

$$\frac{\eta_d'}{\eta_d} = \left(1 + \frac{\mu}{\nu^2}\right) \frac{(1 + \mu \nu)^2}{(1 + \mu)^3} \tag{65a}$$

Figure 11 illustrates this ratio in relation to ν for different μ. For ν values slightly less than 1 there is no marked difference between η_d' and η_d (in this case the pressure rise can be computed with η_d and the mean velocity c_n), while for low values ν, that is, very incomplete mixing, the diffuser efficiency η_d' referred to means inflow velocity c_n may become very high and subject to very great changes (hence must in no case be equated to η_d). Thus it appears practical to ascertain the degree of mingling in the mixing nozzle, according to the method outlined for case 2.

b) Gas and Steam Jet Pumps

Owing to the variation of specific gravity γ and its dissimilarity in the driving and the delivered jet the conditions here become so complicated as to render a solution of the problem impossible if they are strictly allowed for. So for simplicity it is assumed that in a section F of the mixing nozzle the specific gravity γ as well as the heat content i of driving jet and entrained jet is equal.

Puting the heat content i at

$$(G_1 + G_2)\, i = G_1 i_1 + G_2 i_2 \tag{66}$$

gives the energy equation

$$\frac{A}{2g}\,(G_1 c_1^2 + G_2 c_2^2) + (G_1 + G_2) i = G_1\, i_e + G_2\, i_o$$

or

$$i = \frac{1}{1+\mu}\left[\mu\, i_e + i_o - \frac{A}{2g}\,(\mu\, c_1^2 + c_2^2)\right] \tag{67}$$

According to the previous equation (31) the specific gravity is

$$\gamma = \frac{p}{C(i-K)} = \frac{p(1+\mu)}{C\left[\mu i_e + i_o - K(1+\mu) - \frac{A}{2g}(\mu c_1^2 + c_2^2)\right]} \tag{68}$$

the values C and K being known from the calculation under II, b. Furthermore, the continuity equations (47) give for the driving and the entrained jet

$$\gamma = \frac{1}{F}\left(\frac{G_1}{c_1} + \frac{G_2}{c_2}\right) \tag{69}$$

The validity of equations (46) to (50) for the mixing process is the same as for incompressible fluids. Adding together equations (46a) and (46b) gives

$$dp = -\frac{1}{F}\left[\frac{G_1}{g}\, dc_1 + \frac{G_2}{g}\, dc_2 + \lambda\sqrt{\pi\, F}\,\frac{\gamma}{g}\, c_2^2 d\, x\right] \tag{70}$$

$$p_x = p_o + \frac{G_1}{g}\int_{c_{1x}}^{c_{1o}} \frac{dc_1}{F} - \frac{G_2}{g}\int_{c_{2o}}^{c_{2x}} \frac{dc_2}{F} - \lambda\sqrt{\pi}\,\frac{\gamma_m}{g\sqrt{F_m}}\,c_{2m}{}^2 x \qquad (71)$$

with the last term again an unimportant correction term.

1. Mingling of jet at constant pressure.- (Intake to beginning of mixing nozzle*): Owing to $dp = 0$, the integration of equation (70) (reference section as for case 1 in III, a) is simplified to

$$\mu(c_{1x} - c_{1o}) + c_{2x} - c_{2o} + \frac{ag}{G_2}\,x = 0 \qquad (72)$$

whereby

$$a = \lambda\sqrt{\pi}\,\frac{\gamma_m\,c_{2m}{}^2}{g\sqrt{F_m}}$$

with

$$c_{2m}{}^2 \approx c_{2o}\,c_{2x}$$

$$F_m \approx \sqrt{F_o\,F_x}$$

$$\gamma_m \approx \sqrt{\gamma_o\,\gamma_x}$$

Equation (72) follows from the relation between c_{1x} and c_{2x}, to be determined in first approximation with correction term x disregarded (since length x is as yet unknown) and later on corrected. The values c_{1o} and c_{2o} at the end of the power nozzle are known from earlier calculation.

The flow section F_x required is according to equations (68) and (69):

$$F_x = \frac{\dfrac{G_1}{c_{1x}} + \dfrac{G_2}{c_{2x}}}{(1+\mu)p_o}\,C\left[\mu\,i_e + i_o - K(1+\mu) - \frac{A}{2g}(\mu\,c_{1x}{}^2 + c_{2x}{}^2)\right] \qquad (73)$$

This equation defines the velocities c_{1x}, c_{2x} existing at entry into the narrowest section computed according to II, b.

*It is assumed that the driving jet manifests no vibrations such as occur in the supersonic range in certain cases (if the nozzle expansion is insufficient).

For computing the lengths x, it is best to use equation (46a), which, because $dp = 0$ with allowance for equations (45) and (50), takes the form

$$\frac{G_1}{g}\, dc_1 + \chi \sqrt{\pi\, z'}\, \sqrt{\frac{G_1}{c_1\, \gamma}}\, dx\, \frac{\gamma}{g}\, (c_1 - c_2)^2 = 0$$

The integration of this equation gives

$$x = \frac{\sqrt{G_1}}{\chi \sqrt{\pi z' \gamma_m}} \int_{c_{1x}}^{c_{1o}} \Phi\, dc_1 \tag{74}$$

whereby

$$\Phi = \frac{\sqrt{c_1}}{(c_1 - c_2)^2}$$

(with $c_2 = c_{2x}$ according to equation (72)) is plotted against $c_1 = c_{1x}$ (fig. 12) and preferably is integrated graphically. Because of the minor variation of γ

$$\gamma_m \approx \sqrt{\gamma_o \gamma_x}$$

is sufficiently accurate. A subsequent correction can be effected with more accurate consideration of the term with x in equation (72).

The length x for each section F_x can be determined from equations (73) and (74).

Since the section F_o at the end of the power nozzle can be computed according to equation (73) or, more accurately with consideration of the actual specific gravities in the power and the entrained jet, which, of course, yields a slight difference, the F values can be corrected subsequently, bearing in mind that the difference between γ_1 and γ_2 decreases steadily with increasing intermingling of the two jets.

2. Mingling of jet by constant section F.- (Pressure rise in throat): According to equation (71), it is in this case

$$p_x = p_o + \frac{G_1}{gF}\, (c_{1o} - c_{1x}) - \frac{G_2}{gF}\, (c_{2x} - c_2) - a\, x \tag{75}$$

whereby, as in equation (72)

$$a = \lambda \sqrt{\pi} \frac{\gamma_m \, c_{2m}^2}{g\sqrt{F}}$$

with

$$c_{2m}^2 \approx c_{20} \, c_{2x}$$

$$\gamma_m \approx \sqrt{\gamma_o \gamma_x}$$

subscript o (corresponding to $x = 0$) now refers to the beginning of the narrowest section (as in case 2, III, a).

With the aid of the two expressions for γ according to equations (68) and (69), p_x in equation (75) can be eliminated, leaving

$$\frac{C}{1+\mu}\left(\frac{G_1}{c_{1x}} + \frac{G_2}{c_{2x}}\right)\left[\mu \, i_e + i_o - K(1+\mu) - \frac{A}{2g}\left(\mu \, c_{1x}^2 + c_{2x}^2\right)\right] =$$

$$= F \, p_o + \frac{G_1}{g}\left(c_{10} - c_{1x}\right) - \frac{G_2}{g}\left(c_{2x} - c_{20}\right) - \alpha \, F \, x \qquad (76)$$

With this equation the pertinent c_{2x} can be computed for any assumed value c_{1x}, the correction term with a being temporarily postponed so as to obtain a preliminary solution. And with equation (75) the pressure p_x for each pair of c_{1x}, c_{2x} and with equations (68) and (69) γ_x can be obtained.

For computing the mixing lengths x, equation (46a) may be used again, which, with allowance for equations (45), (47), and (50) can be written in the form

$$\frac{G_1}{g} dc_1 + \frac{dp}{\frac{1}{F}\left(1 + \frac{c_1}{\mu c_2}\right)} + \chi \sqrt{\pi z'} \, \frac{G_1}{g} \, c_1 \left(1 - \frac{c_1}{c_2}\right)^2 \sqrt{\frac{1}{F}\left(1 + \frac{c_1}{\mu c_2}\right)} \, dx = 0$$

The integration gives

$$x = \frac{1}{\chi \sqrt{\pi \, z'}} \left[\int_{c_{1x}}^{c_{10}} \Phi \, dc_1 - \int_{p_o}^{p_x} \psi \, dp \right] \qquad (77)$$

whereby

$$\Phi = \frac{1}{c_1\left(1 - \frac{c_1}{c_2}\right)^2 \sqrt{\frac{1}{F}\left(1 + \frac{c_1}{\mu\, c_2}\right)}}$$

$$\psi = \frac{g\,\Phi}{\frac{G_1}{F}\left(1 + \frac{c_1}{\mu\, c_2}\right)}$$

The integration should be made graphically, with Φ plotted against c_1 and ψ plotted against p as in figure 12. In this manner the extent of intermingling with the length of the narrowest section can be ascertained. For gas and steam the mathematical analysis of the mixing process is unfortunately more complicated than for liquids.

3. Pressure rise in the diffuser.- For gas flow in a diffuser the conditions are fundamentally like those for liquids (see III a, 3); hence it is again preferable to compute the conversion of energy simply with the help of the energy equation and the diffuser efficiency η_d rather than on the basis of equation (53).

With c_1 and c_2 as the velocity of the driving jet and the delivered medium, respectively, at the end of the narrowest section and H_K'' as the adiabatic compression gradient corresponding to the pressure rise from p_n (at diffuser entry) to p_a, the energy equation reads

$$(G_1 + G_2)H_K'' = \eta_d \frac{A}{2g}[G_1(c_1^2 - c_a^2) + G_2(c_2^2 - c_a^2)]$$

hence

$$H_K'' = \frac{\eta_d}{1 + \mu} \frac{A}{2g}[\mu(c_1^2 - c_a^2) + (c_2^2 - c_a^2)]$$

where $c_a = \tau c_0$ is usually negligible. On the other hand, there is the relation

$$p_a = p_n \Phi$$

similar to equation (41), whereby

$$\Phi = \left(1 + \frac{H_K''}{i_n - K}\right)^{\frac{1}{AC}} \approx 1 + \frac{H_K''}{AC(i_n - K)}\left(1 + \frac{1 - AC}{2\,AC}\,\frac{H_K''}{i_n - K}\right)$$

The heat content i_n at the end of the mixing nozzle itself follows from the equation of energy

$$G_1\, i_e + G_2\, i_o = (G_1 + G_2) i_n + \frac{A}{2\,g}\,(G_1\, c_1^2 + G_2\, c_2^2)$$

at

$$i_n = \frac{1}{1 + \mu}\left[\mu\, i_e + i_o - \frac{A}{2g}\,(\mu\, c_1^2 + c_2^2)\right]$$

Thus the obtainable end pressure p_a can be checked more accurately than in III, since the more or less incomplete jet mingling on entry in the diffuser is allowed for, while previously the mingling had been assumed to be complete. Naturally, the present relations hold for steam as well as for gas, in the latter case with $K = 0$, $C = R/c_p$, and $i = c_p\, T$. By plotting the gradient H_K'' from point p_n, i_n upward, the end pressure p_a can be defined equally well with the aid of the i,s chart directly.

Gases at supersonic flow have a great tendency to abrupt pressure rise as a result of gas shock (especially at the beginning of the narrowest point). Since this involves profound shock losses, abrupt pressure rise should be avoided as much as possible.

IV. JET PUMPS FOR DISSIMILAR SUBSTANCES

If the driving medium and the delivered medium are different substances but of equal state of aggregation, the calculation process is the same as given in I and II, but the equations receive in part a different form. (In this connection the notation under a,1; a,2; b,1; and b,2 are those of I and II, the notation under a,3 and b,3 those of III.)

a) Jet Pumps for Liquids

1. Pressure rise according to energy equation.- With γ_1 and γ_2 as the specific gravity of driving and delivered medium, respectively,

$$c_o = \varphi_1 \sqrt{\frac{2g}{\gamma_1} (p_e - p_o)}$$

$$c_1 = \varphi_1 \sqrt{\frac{2g}{\gamma_1} (p_e - p_1)}$$

$$c_2 = \varphi_2 \sqrt{\frac{2g}{\gamma_2} (p_o - p_1)} = \alpha\, c_o$$

Equation (1) for the mixing speed c_m remains unchanged, but equation (2) becomes

$$\frac{c_1}{c_o} = \sqrt{1 + \alpha^2 \left(\frac{\varphi_1}{\varphi_2}\right)^2 \frac{\gamma_2}{\gamma_1}} \tag{78}$$

The earlier equation (3) takes the form

$$p_a - p_1 = p_a - p_o + \alpha^2 \left(\frac{\varphi_1}{\varphi_2}\right)^2 \frac{\gamma_2}{\gamma_1} (p_e - p_o)$$

$$= \eta \frac{\gamma_m}{2g} [c_m{}^2 - c_a{}^2]$$

and the specific gravity γ_m of the mixture follows from

$$\frac{G_1 + G_2}{\gamma_m} = \frac{G_1}{\gamma_1} + \frac{G_2}{\gamma_2}$$

or

$$\gamma_m = \gamma_1 \frac{\mu + 1}{\mu + \frac{\gamma_1}{\gamma_2}} \tag{79}$$

Entering the relations for γ_m and c_m in the equation for $p_a - p_1$ affords

$$(1 + \mu)^2 A - 2(1 + \mu) B = - C \tag{80}$$

with

$$A = \left(\frac{c_1}{c_0}\right)^2 - \frac{p_a - p_0}{\eta\varphi_1{}^2(p_e - p_0)} - \frac{\alpha^2}{\eta\varphi_2{}^2}\frac{\gamma_2}{\gamma_1} - \tau^2$$

$$B = \frac{c_1}{c_0}\left(\frac{c_1}{c_0} - \alpha\right) + \frac{(p_a - p_0)\left(\frac{\gamma_1}{\gamma_2} - 1\right)}{2\eta\varphi_1{}^2(p_e - p_0)} + \frac{\alpha^2}{2\eta\varphi_2{}^2}\left(1 - \frac{\gamma_2}{\gamma_1}\right)$$

$$C = \left(\frac{c_1}{c_0} - \alpha\right)^2$$

which, resolved, reads:

$$\mu = \frac{B}{A}\left[1 + \sqrt{1 - \frac{CA}{B^2}}\right] - 1 \tag{81}$$

For $\gamma_1 = \gamma_2$, this becomes after various transformations equation (4).

For computing the narrowest section, equation (5) now takes the form

$$F_m = (1 + z)(1 + \mu)\frac{G_2}{c_m\gamma_m} \tag{82}$$

and for the efficiency

$$\eta_s = \frac{G_2\dfrac{p_a - p_0}{\gamma_2}}{G_1\dfrac{p_e - p_a}{\gamma_1}} = \frac{1}{\mu}\frac{\gamma_1}{\gamma_2}\frac{p_a - p_0}{p_e - p_a} \tag{83}$$

2. Accurate prediction of pressure rise.- Equation (22) remains unchanged. The introduction of the corresponding specific gravities γ_2 and γ_m in equations (23) and (24) gives in place of equation (25):

$$\zeta = 4\lambda\frac{L'}{d}\frac{\gamma_2}{\gamma_m} \tag{84}$$

Substitution of γ_m for γ in equations (26) and (27) changes the form of equation (28) to

$$p_a - p_o = \varphi^2(p_e - p_o)\left[\frac{2\sigma}{\mu + \frac{\gamma_1}{\gamma_2}}\left(\mu\frac{c_1}{c_o} + \alpha - \sigma(1+\mu) \times \right.\right.$$

$$\left.\left. \times \left(1 + \frac{\zeta}{2}\right)\right) + \frac{\mu + 1}{\mu + \frac{\gamma_1}{\gamma_2}}\eta_d(\sigma^2 - \tau^2) - \left(\frac{\alpha}{\varphi_2}\right)^2 \frac{\gamma_2}{\gamma_1}\right] \tag{85}$$

From it follows the proportional consumption of propellant at

$$\mu = \frac{\frac{p_a - p_o}{\varphi_1^2(p_e - p_o)}\frac{\gamma_1}{\gamma_2} + \sigma^2(2 + \zeta - \eta_d) - 2\sigma\alpha + \left(\frac{\alpha}{\varphi_2}\right)^2 + \eta_d\tau^2}{2\sigma\frac{c_1}{c_o} - \left[\sigma^2(2 + \zeta - \eta_d) + \left(\frac{\alpha}{\varphi_2}\right)^2\frac{\gamma_2}{\gamma_1} + \eta_d\tau^2\right] - \frac{p_a - p_o}{\varphi_1^2(p_e - p_o)}} \tag{86}$$

In equation (30) γ_m replaces γ, so that

$$F_m = \frac{G_2\left(\mu + \frac{\gamma_1}{\gamma_2}\right)}{\sigma c_o \gamma_1} \tag{87}$$

The process of calculation is, of course, fundamentally the same as in II, a.

Since, according to the arguments advanced in II, c, it is best to have the driving nozzle extend in the narrowest section, the relation

$$F_m = f_1 + f_2 = \frac{G_1}{c_1\gamma_1} + \frac{G_2}{c_2\gamma_2} = \frac{G_1 + G_2}{c_n\gamma_m} \quad \text{holds true.}$$

With equation (79) and $c_n = \sigma c_o$, it follows that

$$\mu\frac{c_o}{c_1} + \frac{\gamma_1}{\alpha\gamma_2} = \frac{1}{\sigma}\left(\mu + \frac{\gamma_1}{\gamma_2}\right)$$

or

$$\mu = \frac{\left(\frac{\sigma}{\alpha} - 1\right) \frac{\gamma_1}{\gamma_2}}{1 - \frac{\sigma}{\sqrt{1 + \alpha^2 \left(\frac{\varphi_1}{\varphi_2}\right)^2 \frac{\gamma_2}{\gamma_1}}}} \tag{88}$$

Different values α for a certain value σ give, in general, different μ values for equations (86) and (88). The correct solution of α lies only where the two μ values are equal to each other, that is, where the two μ curves plotted against α intersect. In this manner the pertinent values of α for different values of σ can be determined and so the absolute optimum point for a minimum μ be obtained.

3. Calculation of the advancing mixing process.- So far, no mathematical theorem is to be found in literature for the turbulent intermingling of liquids of different specific gravities. However, an attempt to supply one will be made.

If, as in figure 10, there are two fluid flows of different velocity c_1, c_2 in the same direction (let $c_1 > c_2$), but of different specific gravities γ_1, γ_2, the boundary surface here also will manifest minor disturbances (fig. 13), which, as there, gradually grow to great disturbances (vortex balls). At the point of disturbance on the boundary surface itself a small pressure disturbance Δp will occur which evidently is associated with the rate of advance c_s of the point of disturbance and which may be expressed by the following relations:

$$\Delta p = k_1 \frac{\gamma_1}{2g} (c_1 - c_s)^2 = k_2 \frac{\gamma_2}{2g} (c_s - c_2)^2 \tag{89}$$

where k_1 and k_2 are proportional values. Now assume that $k_1 = k_2$. Then

$$c_s = \frac{c_1 + c_2 \sqrt{\frac{\gamma_2}{\gamma_1}}}{1 + \sqrt{\frac{\gamma_2}{\gamma_1}}} \tag{90}$$

or

$$c_1 - c_s = \frac{c_1 - c_2}{1 + \sqrt{\frac{\gamma_1}{\gamma_2}}}$$

$$c_s - c_2 = \frac{c_1 - c_2}{1 + \sqrt{\frac{\gamma_2}{\gamma_1}}}$$

With the growth of the disturbance the first and the second fluid, respectively, penetrates at a rate v_1 and v_2, respectively, in the other fluid, and it suggests itself to put the mixing speed at

$$\frac{v_1}{v_2} = \frac{c_1 - c_s}{c_s - c_2}$$

or

$$v_1 = 2\chi(c_1 - c_s)$$

$$v_2 = 2\chi(c_s - c_2) \tag{91}$$

where χ is an empirical value $(\chi \approx 0.1)$.

Then, if from an originally straight fraction O of the contact surface of the two flows on a port O_1, the first liquid penetrates the second (fig. 13) while the latter flows into the first on the remaining part O_2, the exchanged volumes must for reasons of continuity be equal, that is:

$$O_1 v_1 = O_2 v_2 = Ov \tag{92}$$

with v denoting the mixing speed referred to the total surface piece O. Since $O = O_1 + O_2$, it follows from equations (90) to (92) that:

$$v = \frac{O_1 v_1}{O_1 + O_2} = \frac{O_1 v_1}{O_1 + O_1 \frac{v_1}{v_2}} = \frac{2\chi(c_1 - c_2)}{2 + \sqrt{\frac{\gamma_1}{\gamma_2}} + \sqrt{\frac{\gamma_2}{\gamma_1}}} \tag{93}$$

Figure 14, showing $\frac{v}{\chi(c_1 - c_2)}$ plotted against $\frac{\gamma_1}{\gamma_2}$, discloses that, under otherwise identical conditions, the mixing speed v becomes so much slower as the specific gravity ratio γ_1/γ_2 departs more greatly from 1, and that - unless the departure from value 1 is too great - the mixing speed is almost exactly as high as for $\gamma_1/\gamma_2 = 1$.

The momentum exchange through the small boundary surface O effects an apparent shearing force P which, as known, can be computed at

$$P = O\tau = \frac{\Delta G_1 \; c_1}{g} - \frac{\Delta G_2 \; c_2}{g}$$

where

$$\Delta G_1 = O \; v \; \gamma_1$$

$$\Delta G_2 = O \; v \; \gamma_2$$

are the exchanged weight quantities. Hence

$$\tau = \frac{2\chi}{2 + \sqrt{\frac{\gamma_1}{\gamma_2}} + \sqrt{\frac{\gamma_2}{\gamma_1}}} \; \frac{c_1 \; \gamma_1 - c_2 \; \gamma_2}{g} \; (c_1 - c_2) \tag{94}$$

For $\gamma_1 = \gamma_2$, equations (93) and (94) become the equations employed in III.

Equations (93) and (94) can be transformed also for mixing fields with steadily changing values of c and γ if

$$c_1 = c, \qquad c_2 = c + \Delta c, \qquad \Delta c = \frac{\partial c}{\partial n} \, l$$

$$\gamma_1 = \gamma, \qquad \gamma_2 = \gamma + \Delta\gamma, \qquad \Delta\gamma = \frac{\partial \gamma}{\partial n} \, l$$

where n is the direction at right angle to the flow direction and l the mixing length. Then equations (93) and (94) are replaced by

$$v = \frac{2\,\chi\,l\,\frac{\partial c}{\partial n}}{2 + \left(1 + \frac{1}{\gamma}\frac{\partial \gamma}{\partial n}\right)^{1/2} + \left(1 + \frac{1}{\gamma}\frac{\partial \gamma}{\partial n}\right)^{-1/2}} \tag{93a}$$

$$\tau = \frac{2\,\chi\,l^2}{g\left[1 + \left(1 + \frac{1}{\gamma}\frac{\partial \gamma}{\partial n}\right)^{1/2} + \left(1 + \frac{1}{\gamma}\frac{\partial \gamma}{\partial n}\right)^{-1/2}\right]}\,\frac{\partial c}{\partial n}\,\frac{\partial (c\,\gamma)}{\partial n} \tag{94a}$$

As manifested by equations (93) and (94), the calculation of mixing fields with variable specific gravities is much more difficult than of these with constant γ values. In view of these difficulties the exact method followed up to this point is dropped in favor of an approximate method according to which, from the very beginning of the mixing, that is, from the end of the driving nozzle, the specific gravity γ_m is dealt with as constant according to equation 79 for driving and delivered medium. Since, according to equation (93) and figure 14 - provided the difference between γ_1 and γ_2 - the mixing speed v is in any case almost exactly as high as for $\gamma_1 = \gamma_2$, this simpler method is definitely justified. If necessary, the effect of the dissimilarity of specific gravities can be taken care of by a slightly lower value of χ. Besides, there is no practical demand for the calculation of jet pumps with very great difference in specific gravities in driving and delivered liquid.

Inasmuch as the specific gravity γ_m is considered constant in the approximate method, the sections, by equal speed of driving jet c_1 and equal inflow velocity c_2 at the point of the actual sections f_1 and f_2, are somewhat different:

$$\begin{aligned} f_1' &= f_1\,\frac{\gamma_1}{\gamma_m} \\ f_2' &= f_2\,\frac{\gamma_2}{\gamma_m} \end{aligned} \tag{95}$$

and consequently a somewhat different section $F' = f_1' + f_2'$ at the actual mixing nozzle section $F = f_1 + f_2$ with which the calculation of the advancing intermingling in the manner of III, a must be effected. For the practical

execution of such a calculation the best procedure is to determine the values f_1', f_2' and $F' = f_1' + f_2'$ at the orifice of the driving nozzle and to assume for the time being constant pressure for the mingling until the section F' of the mixing nozzle decreasing with increasing mingling is almost equal to the actual narrowest section F_m of the mixing nozzle. The subsequent calculation of the progressing intermingling for constant section F_m follows, of course, III, a.

b) Jet Pumps for Gas and Steam (Vapors)

1. Pressure rise according to energy equation.- For a jet pump operated with dissimilar gases or vapors or by a mixture of gas and steam in which the driving pressure p_e, the suction chamber pressure p_o, the terminal p_a and the delivery volume G_2 are given the equations (7) to (11) remain temporarily the same for the individual kinds of gas and steam.

As for the value ϵ in equation (11)

$$1 + \epsilon = \frac{H_2}{H_1 - H_e}$$

is valid, whereby ϵ can now become positive as well as negative. The gradients H are taken from i,s charts or else may be compared by generalization of equation (41) according to which

$$\frac{p}{p'} = \left(\frac{i - K}{i' - K}\right)^{\frac{1}{AC}} = \left(\frac{i - K}{i - H - K}\right)^{\frac{1}{AC}} = \left(1 - \frac{H}{i - K}\right)^{-\frac{1}{AC}};$$

$$H = (i - K)\left[1 - \left(\frac{p'}{p}\right)^{-AC}\right] \tag{96a}$$

for expansion, and

$$\frac{p'}{p} = \left(\frac{i' - K}{i - K}\right)^{\frac{1}{AC}} = \left(\frac{i + H - K}{i - K}\right)^{\frac{1}{AC}} = \left(1 + \frac{H}{i - K}\right)^{-\frac{1}{AC}};$$

$$H = (i - K)\left[\left(\frac{p'}{p}\right)^{AC} - 1\right] \tag{96b}$$

for compression.

The constants C and K can be computed again with equations (32) and (33) from two points I and II, which would be located as near as possible to the beginning and end of the actual expansion and compression line, respectively. It is accordingly

$$H_a = (i_e - K_1)\left[1 - \left(\frac{p_a}{p_e}\right)^{-AC_1}\right] \tag{96c}$$

$$H_e = (i_e - K_1)\left[1 - \left(\frac{p_o}{p_e}\right)^{-AC_1}\right] \tag{96d}$$

$$H_1 = (i_e - K_1)\left[1 - \left(\frac{p_1}{p_e}\right)^{-AC_1}\right] \tag{96e}$$

$$H_2 = (i_o - K_2)\left[1 - \left(\frac{p_1}{p_o}\right)^{-AC_2}\right] = \alpha^2\left(\frac{\varphi_1}{\varphi_2}\right)^2 H_e \tag{96f}$$

$$H_K = (i_o - K_2)\left[\left(\frac{p_a}{p_o}\right)^{AC_2} - 1\right] \tag{96g}$$

$$H_{K_1}' = (i_{m_1} - K_1)\left[\left(\frac{p_a}{p_1}\right)^{AC_1} - 1\right] \tag{96h}$$

$$H_{K_2}' = (i_{m_2} - K_2)\left[\left(\frac{p_a}{p_1}\right)^{AC_2} - 1\right] \tag{96i}$$

By an assumed value α the pressure p_1 according to equation (96f) is defined by the relation

$$p_1 = p_o\left[1 - \alpha^2\left(\frac{\varphi_1}{\varphi_2}\right)^2 \frac{H_e}{i_o - K_2}\right]^{-\frac{1}{AC_2}}$$

The heat content i_m and i_{m_2}, respectively, of the driving and the delivered medium, respectively, after accomplished intermingling at pressure p_1 is, instead of with equation (12), computed by

$$\mu\, i_{m_1} + i_{m_2} = \mu\, i_e + i_o - (1 + \mu)\left(\frac{c_m}{91.5}\right)^2 \tag{97}$$

If on the pressure line p_1 (or p_o) two points are selected with any temperatures t' and t'', but located within the temperature range for the intermingling in

question, and if i_1', i_1'' and i_2', i_2'', respectively, are the corresponding heat content of driving agent and delivered agent, respectively, an exact or sufficiently accurate relation for the heat content i_1, i_2 at a different temperature and equal pressure is found in

$$i_2 = i_2' + k(i_1 - i_1') \tag{98}$$

where

$$k = \frac{i_2'' + i_2'}{i_1'' + i_1'}$$

If i_1, i_2 are replaced by i_{m_1}, i_{m_2}, equation (97) can be changed to

$$i_{m_1} = \frac{1}{\mu + k}\left[\mu\ i_e + i_o - (1 + \mu)\left(\frac{c_m}{91.5}\right)^2 - i_2' + k\ i_1'\right] \tag{99}$$

This defines i_{m_1}, and i_{m_2} follows from equation (97) (i_1' and i_2' now refer to the state before mixing at pressure p_1).

Now the compression gradient H_{K_1}', H_{K_2}' of driving and delivered medium can be computed from equation (96h), and the compression can, instead of with equation (13) be expressed with

$$\mu\ H_{K_1}' + H_{K_2}' = (1 + \mu)\ \eta\ \varphi_1^2 H_e \left[\left(\frac{\mu\ \frac{c_1}{c_o} + \alpha}{1 + \mu}\right)^2 - \tau^2\right] \tag{100}$$

or, in different form,

$$(1 + \mu)^2\ A - 2(1 + \mu)\ B = -\ C$$

whereby

$$A = \left(\frac{c_1}{c_o}\right)^2 - \frac{H_{K_1}'}{\eta\ \varphi_1^2\ H_e} - \tau^2$$

$$B = \frac{c_1}{c_o}\left(\frac{c_1}{c_o} - \alpha\right) + \frac{H_{K_1}' - H_{K_2}'}{2\eta\ \varphi_1^2\ H_e}$$

$$C = \left(\frac{c_1}{c_0} - \alpha\right)^2$$

Hence follows:

$$\mu = \frac{B}{A}\left[1 + \sqrt{1 - \frac{CA}{B^2}}\right] - 1 \tag{101}$$

In the expressions for A, B, and C, sufficient accuracy is retained with

$$H_{K_2}' = H_K + H_2 = H_K + \alpha^2\left(\frac{\varphi_1}{\varphi_2}\right)^2 H_e ,$$

$$H_{K_1}' = H_{K_2}'(1 + \epsilon') = (1 + \epsilon')\left[H_K + \alpha^2\left(\frac{\varphi_1}{\varphi_2}\right)^2 H_e\right]$$

The value ϵ' can be obtained by computing - for the adiabatic compression from an initial state p_0, t_m (with t_m within range of the prospective mixing temperature) to terminal pressure p_a - the compression gradients H_1, H_2 for the driving and the delivered mediums; then

$$1 + \epsilon' = \frac{H_1}{H_2}$$

For computation of the cross section the mixture is best treated as a homogeneous elastic substance which follows the general equation of state according to equation (31). Select two points I and II located approximately at the beginning and the end of the compression line and corresponding to the states p_I, t_I and p_{II}, t_{II}, respectively; then the mixture follows the old relations

$$p_I v_I = C(i_I - K)$$

$$p_{II} v_{II} = C(i_{II} - K)$$

whereby:

$$v_I = \frac{1}{1 + \mu}(\mu v_{I_1} + v_{I_2})$$

$$v_{II} = \frac{1}{1 + \mu}(\mu v_{II_1} + v_{II_2})$$

$$i_I = \frac{1}{1 + \mu}(\mu\ i_{I_1} + i_{I_2})$$

$$i_{II} = \frac{1}{1 + \mu}(\mu\ i_{II_1} + i_{II_2})$$

Then C and K can be computed with equations (32) and (33). For the compression to an intermediate pressure p there is again equation (18) and the relation between p and the compression gradient H' is given by

$$\frac{p}{p_1} = \left(1 + \frac{H'}{i_m - K}\right)^{\frac{1}{AC}}$$

where $i_m = (\mu\ i_{m_1} + i_{m_2})/(1 + \mu)$ is the heat content of the mixture at the beginning of compression (equation (97)). The heat content i of the mixture at pressure p follows from equation (19), where $i_I = i_m$; the specific volume v follows from equation (31). Herewith the calculation of the cross section for the determination of the narrowest section by means of equation (20) can be effected. For the efficiency equation (21) is applicable.

2. Exact prediction of the pressure rise.- The equations developed in II, b remain valid without change. In equation (34) ζ is defined by equation (84), with γ_2 and γ_m referring to the state at the orifice of the driving nozzle. The constants C and K appearing in the subsequent equations are to be determined as explained in IV, b, 1. However, since these values contain μ, a first value of the μ must be computed according to equation (101) before the more exact value can be computed from equation (42). Since C and K were computed with the temporary value of μ, a correction must be applied later on.

The conclusion drawn in II, c, that the driving nozzle should preferably extend into the throat of the mixing nozzle is again applicable, provided the driving jet possesses no excessive supersonic velocity. Then it is again $F_m \doteq f_1 + f_2$, or

$$\frac{G_1 + G_2}{c_n \gamma_n} = \frac{G_1}{c_1 \gamma_1} + \frac{G_2}{c_2 \gamma_2}$$

Since
$$\frac{1}{\gamma_n} = v_n = \frac{C(i_n - K)}{p_n}$$
and i_n are defined by equation (36) and p_n by equation (41), it follows from the foregoing relation that
$$\mu = \frac{A}{B} \tag{102}$$
where
$$A = \frac{C\,\gamma_1\,\Phi}{\sigma\,p_a}\,(i_e - i_o) + \frac{1}{\alpha}\,\frac{\gamma_1}{\gamma_2}$$
$$B = \frac{C\,\gamma_1\,\Phi}{\sigma\,p_a}\,(i_e - K - \sigma^2\varphi_1{}^2\,H_e) - \frac{c_o}{c_1}$$
$$\Phi = \left(1 + \frac{H_K{}''}{i_n - K}\right)^{\frac{1}{AC}}$$
$$H_K{}'' = \eta_d\left(\frac{c_o}{91.5}\right)^2(\sigma^2 - \tau^2)$$
$$\frac{c_1}{c_o} = \sqrt{1 + \frac{\alpha^2}{1 + \epsilon}\left(\frac{\varphi_1}{\varphi_2}\right)^2}$$

The value Φ is computed with the temporarily obtained value μ; γ_1 and γ_2 refer to the state at the power nozzle orifice; hence
$$\frac{1}{\gamma_1} = v_1 = \frac{C_1(i_1 - K_1)}{p_1} = \frac{C_1}{p_o}\,\frac{p_o}{p_1}\left[i_e - \varphi_1{}^2\,H_e\left(\frac{c_1}{c_o}\right)^2 - K_1\right] =$$
$$= \frac{C_1}{p_o}\left[i_e - \varphi_1{}^2\,H_e\left(\frac{c_1}{c_o}\right)^2 - K_1\right]\left[1 - \alpha^2\left(\frac{\varphi_1}{\varphi_2}\right)^2\frac{H_c}{i_o - K_2}\right]^{\frac{1}{AC_2}}$$
$$\frac{1}{\gamma_2} = v_2 = \frac{C_2(i_2 - K_2)}{p_2} = \frac{C_2}{p_o}[i_o - \alpha^2\,\varphi_1{}^2\,H_e - K_2] \times$$
$$\times\left[1 - \alpha^2\left(\frac{\varphi_1}{\varphi_2}\right)^2\frac{H_e}{i_o - K_2}\right]^{\frac{1}{AC_2}}$$

The value of μ from equation (102) must agree with that from equation (42) if the power nozzle extends into the throat of the mixing nozzle. For an assumed value of σ, α must therefore be changed until this agreement is achieved. This calculation can, as for liquids, be carried out at different values of σ to find the best point with the minimum value of μ. This method could have been employed at the end of II, c for uniform gas or vaporous substances, but it was not done.

Naturally, in the case of high supersonic speeds, there is a limit even here, beginning at which it becomes impossible to bring the driving and the delivered medium at orifice pressure p_1 in the computedly optimum narrowest section F_m of the mixing nozzle, and from which point on the equations for computing a jet pump becomes more complicated. The cross section F_1 of the mixing nozzle can for every orifice pressure p_1 be obtained from

$$F_1 = \frac{G_1}{c_1\gamma_1} + \frac{G_2}{c_2\gamma_2}$$

and by assuming different values for p its minimum value $F_{1_{min}}$ through which this limit is given.

If on a jet pump for dissimilar substances the value of μ becomes very great (of the order of magnitude of 10 or more), no accuracy is sacrificed if the delivered medium is assumed to be of the same substance as the driving medium. But if μ is very small (of the order of magnitude of 0.1 or less), it again introduces no great error if the driving jet (by preservation of the true discharge velocity from the power nozzle) and the delivered jet are assumed to be of the same substance. If the constants C_1 and C_2 (equation (31)) of the two substances vary little from one another, these safeguards are even allowed at a μ value, which is still closer to 1. In such cases it is then possible to somewhat simplify the calculation of a jet pump.

3. Calculation of the advancing mixing process.- Here also the simplified method by assumption of constant specific gravity over a section is applicable, as is already effected in III, b and in IV, a, 3 for fluids. The entire developments under III, b remain the same. Naturally, the constants C and K of equation (31) must be computed in the manner described in IV, b, 1. In addition, it must be observed that instead of the actual section F of the

mixing nozzle and of the actual section f_1 of the driving jet mathematically correct sections F', f_1' are inserted, whose initial values on the power jet orifice can be determined as in IV, a, 3 for fluids. With advancing intermingling the ratio F'/F as well as f_1'/f_1 continues to approach value 1. As for fluids, it suffices to assume at the start, the mingling at constant pressure, until F' almost reaches the value F_m.

LITERATURE ON JET PUMPS (EJECTORS, INJECTORS)

Reports

Hoefer, K.: Untersuchungen an Luftpumpen für Kondensatoren. VDI-Forschungsheft 253, Berlin: VDI-Verlag 1922.

Heinl, F.: Untersuchungen an Dampfstrahlapparaten. Berlin: VDI-Verlag 1922. VDI-Forschungsheft 256.

Müller, Fr.: Dampfstrahlapparat als Luftpumpe für Kondensationsanlagen. Schiffbau, Bd. 24 (1923), p. 486.

Bosnjakovic, F.: Über Dampfstrahlgebläse. Z. ges. Kälteindustr., Bd. 46 (1936), p. 229.

Watson, F. R. B.: The Production of a Vacuum in an Air Tank by Means of a Steam Jet. Engineering, vol. 135, 1933, p. 230.

Dowson, R.: Performance of a Single-Stage Steam Jet Operated Ejectors. Engineer (London) vol. 164, 1937, pp. 650, 680.

Dissertations

Meyer, E.: Zur Theorie der Dampfstrahl-Luftpumpen. Diss. T. H. Berlin, 1920.

Koch, W.: Untersuchung eines zweistufigen Dampfstrahlapparates mit Zwischen- und Nachkondensation. Diss. T. H. Berlin, 1928.

Henschke, H.: Untersuchungen über verbesserte Strahlgebläse für Tunnellüftung. Diss T. H. Berlin, 1934.

Books

Lorenz, H.: Technische Hydromechanik. R. Oldenbourg (Berlin and München), 1910.

Stodola, A.: Dampf- und Gasturbinen. (5th ed.) J. Springer (Berlin) 1922.

Hoefer, K.: Die Kondensation bei Dampfkraftmaschinen. J. Srpinger (Berlin), 1925.

Balcke, H.: Die Kondensatwirtschaft. R. Oldenbourg (Berlin and München), 1927.

Bosnjakowic, F.: Technische Thermodynamik. Th. Steinkopff (Dresden and Leipzig), 1935.

Translation by J. Vanier,
National Advisory Committee
for Aeronautics.

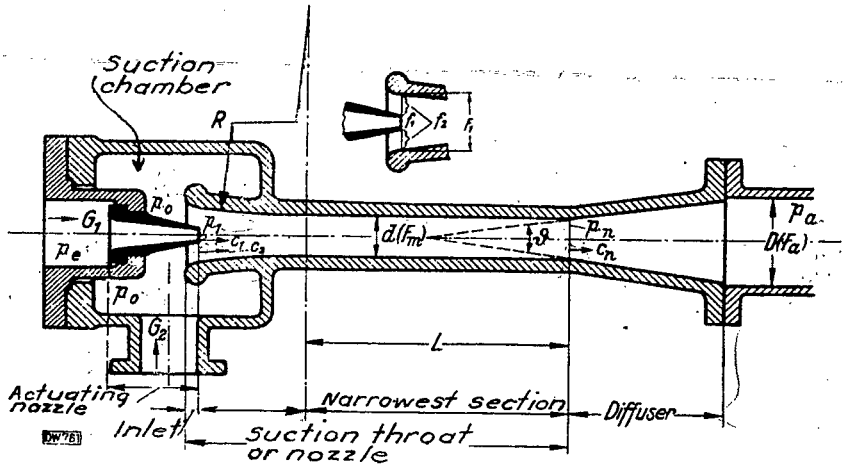

Figure 1.- Longitudinal section of a jet pump. (R = curvature radius of intake flare, ϑ angle of diffuser).

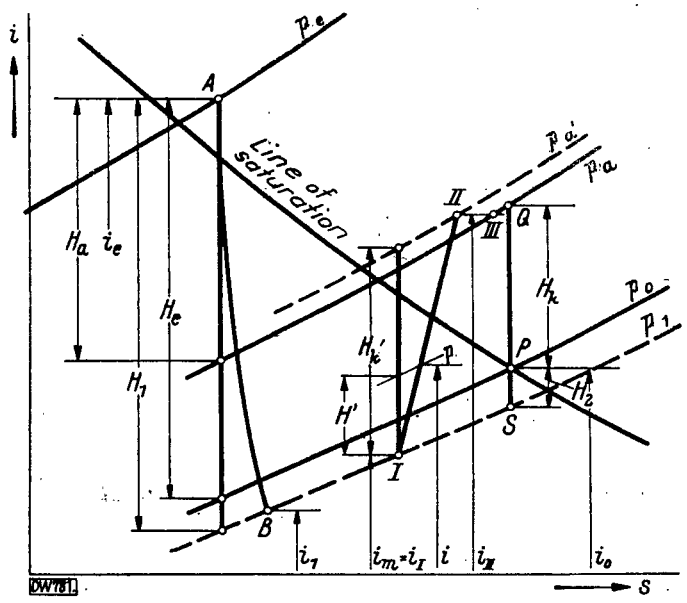

Figure 4.- Expansion and compression in the i-s diagram for steam. (A B = expansion line of driving steam. P = state of indented steam. PQ = theoretical compression line of delivered steam. I-II actual compression line).

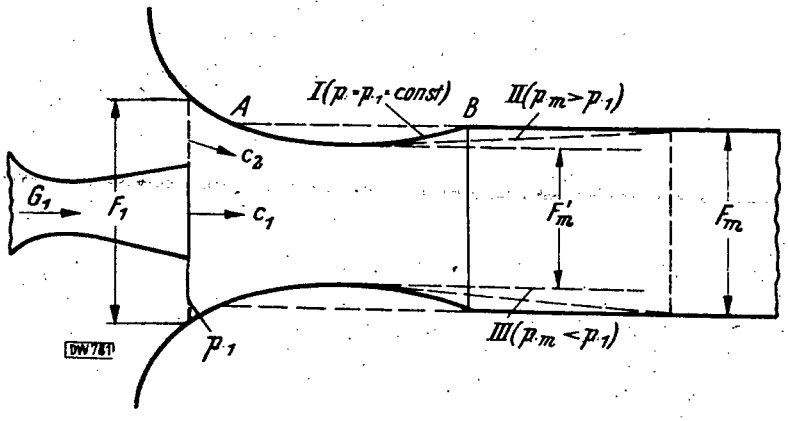

Figure 8.- Intake for gas or steam, power jet at supersonic velocity.

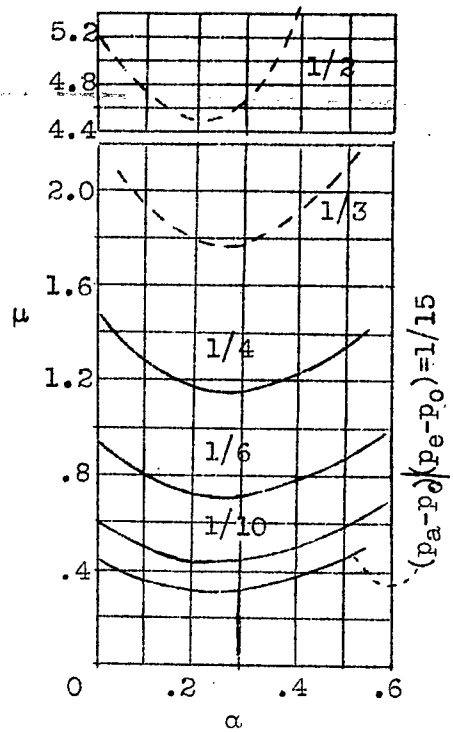

Figure 2.- Proportional driving agent consumption $\mu = G_1/G_2$ plotted against speed ratio $\alpha = c_2/c_o$ for different pressure ratios $(p_a-p_o)/(p_e-p_o)$ (assumed $\varphi_1^2 = 0.95$; $\varphi_2^2=0.85$; $\eta = 0.75$).

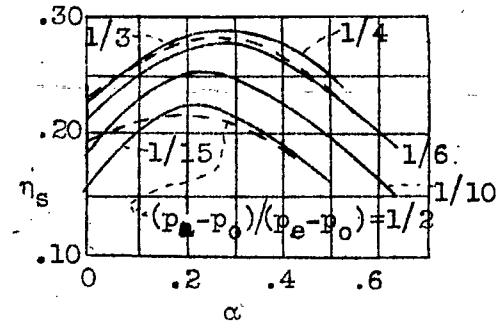

Figure 3.- Efficiency η_s of a jet pump under conditions of figure 2.

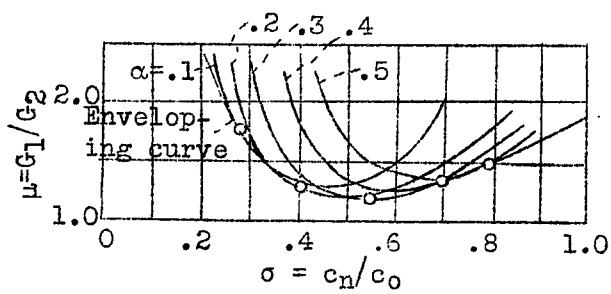

Figure 5.- Consumption $\mu = G_1/G_2$ plotted against speed ratio $\sigma = c_n/c_o$ for different $\alpha = c_2/c_o$ at pressure ratio $(p_a-p_o)/(p_d-p_o)=1/4$ (assumed $\varphi_1^2=0.95$; $\varphi_2^2=0.85$; $\eta_d = 0.75$).

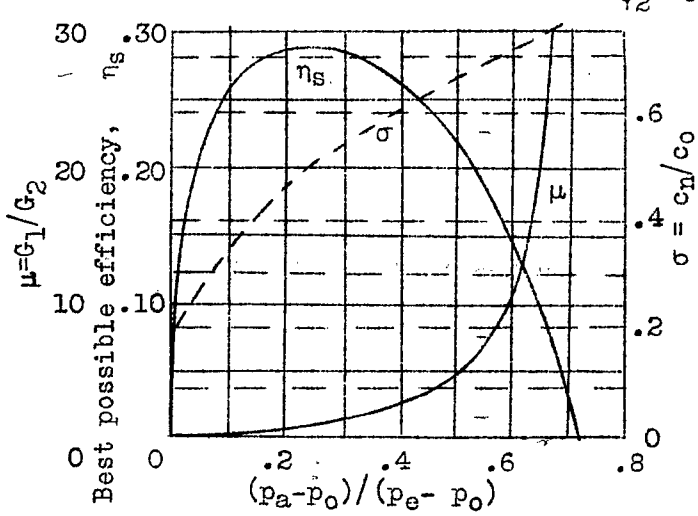

Figure 6.- Best possible efficiency η_s of a jet pump plotted against pressure ratio $(p_a-p_o)/(p_e-p_o)$, along with correlated values of $\sigma = c_n/c_o$ and $\mu = G_1/G_2$ (assumed : $\varphi_1^2=0.95$; $\varphi_2^2=0.85$; $\eta_d = 0.75$).

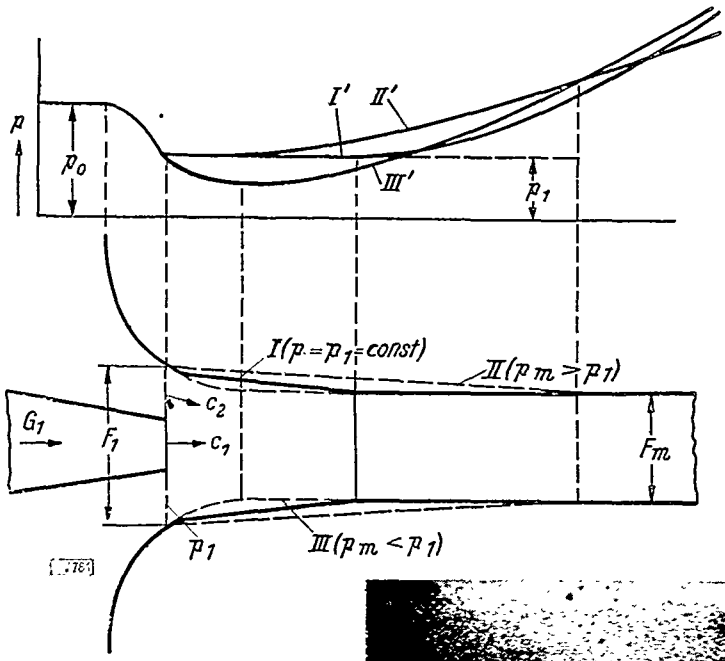

Figure 7.- Intake of jet pump for liquids or gas at subsonic velocity. (The pressure variation lines I',II',III' correspond to mixing nozzle shapes I,II and III.)

Figure 10.- Photograph of the first mixing vortices forming in the contact surface between two fluid flows of different velocities (see arrows), when the two flows were originally separated by a thin wall.

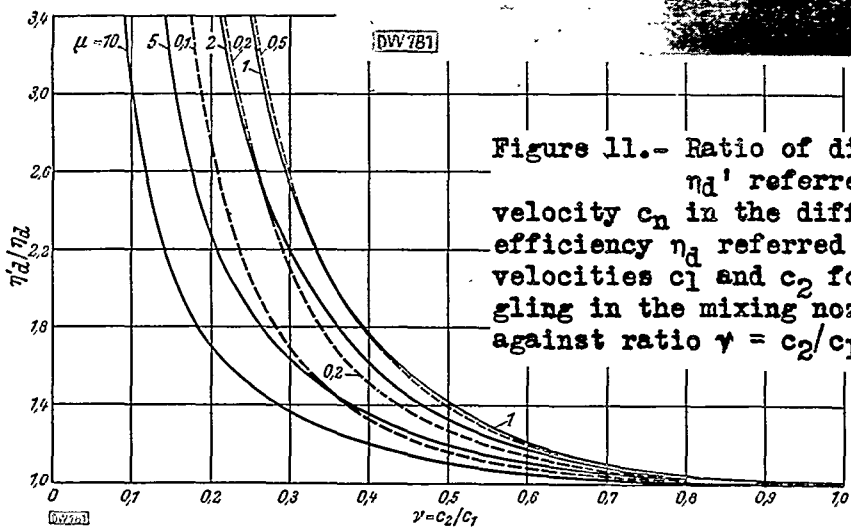

Figure 11.- Ratio of diffuser efficiency η_d' referred to mean inflow velocity c_n in the diffuser to the actual efficiency η_d referred to actual inflow velocities c_1 and c_2 for incomplete mingling in the mixing nozzle plotted against ratio $\gamma = c_2/c_1$ and $\mu = G_1/G_2$.

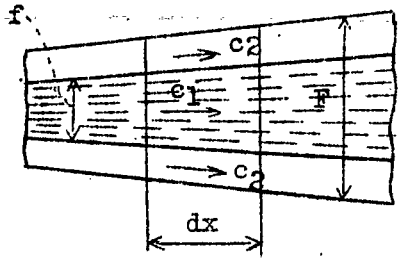

Figure 9.- Power jet entraining the surrounding medium as a result of mixing motions.

Figure 12.- ϕ plotted against c_{1_x} for the purpose of graphical integration.

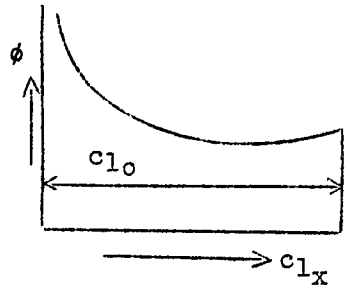

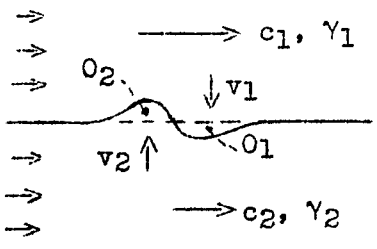

Figure 13.- Flow processes at a point of disturbance of the boundary surface between two fluid flows of different velocities c_1 and c_2 and different specific gravities γ_1 and γ_2.
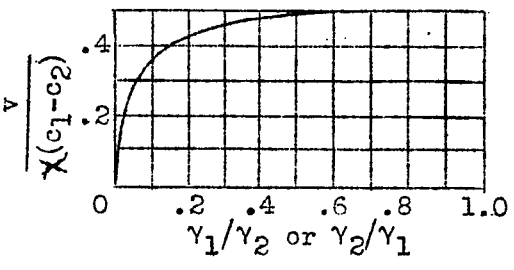
Figure 14.- Ratio of mixing speed v to velocity difference c_1-c_2 of the two flows plotted against γ_1/γ_2.