SEC

Replacement Copy

NATIONAL ADVISORY COMMITTEE FOR AERONAUTICS

TECHNICAL NOTE

No. 1203

A FLIGHT INVESTIGATION TO INCREASE THE SAFETY OF A LIGHT AIRPLANE

By P. A. Hunter and J. R. Vensel

Langley Memorial Aeronautical Laboratory
Langley Field, Va.

LIBRARY COPY
AUG 20 1976
LANGLEY RESEARCH CENTER
LIBRARY, NASA
HAMPTON, VIRGINIA

Washington
March 1947

NASA Technical Library
3 1176 01416 5667

NATIONAL ADVISORY COMMITTEE FOR AERONAUTICS

TECHNICAL NOTE NO. 1203

A FLIGHT INVESTIGATION TO INCREASE THE SAFETY OF A LIGHT AIRPLANE

By P. A. Hunter and J. R. Vensel

SUMMARY

During 1940 and 1941 a series of modifications was incorporated in a typical light airplane to increase its safety. The modifications included: decreasing the wing incidence, increasing the wing washout, increasing the area and aspect ratio of horizontal and vertical tails, moving the elevators out of the propeller slipstream, depressing the thrust axis, and limiting the rudder travel. These modifications were considered ones which could reasonably be made to existing airplanes without basically modifying their external appearance.

The modified airplane possessed the following inherent safety characteristics: (1) motions accompanying the stall were greatly reduced, (2) no motions that did not result from the pilot's action occurred in turns with the elevator held full up, and (3) the airplane was spinproof. The general flying characteristics of the airplane were not materially altered in normal flight. The maximum speed in level flight and the rate of climb were slightly reduced.

INTRODUCTION

Analysis of accident data published by the Civil Aeronautics Administration have shown that stalls, with or without subsequent spins, are responsible for most of the fatalities and injuries in light-airplane accidents. In connection with flying-qualities tests of five light airplanes during 1939 and 1940, it was noted that certain stability and control characteristics of the light airplanes might be modified to increase the safety of these airplanes, particularly with reference to stalling and spinning.

In 1940 and 1941 an investigation was made on a typical light airplane of a number of modifications intended to increase the safety of the airplane. The report on this investigation was not completed at that time because of the urgency of the war work which the NACA was beginning to do. It is now being published as a part of the NACA Personal Aircraft Research Program in order to acquaint the

manufacturers of personal aircraft with work the NACA has done in this field. One of the primary objects of the investigation was to reduce the difference between the up-elevator angles required to stall in the power-on and power-off conditions and then to limit the up-elevator deflection below that required to stall. It was hoped that under these conditions the airplane would continue in unstalled flight with the stick full back and the power on. To hold the changes to a minimum, to make them simple enough to be readily incorporated in airplanes now in service, and not basically to alter the appearance of the airplane were also objectives of the investigation.

DESCRIPTION OF THE ORIGINAL AND THE MODIFIED AIRPLANES

The light airplane used for the tests was a two-passenger (tandem seating arrangement), externally-braced, high-wing cabin monoplane with fixed landing gear and steerable tail wheel. The modified airplane is shown in figure 1. Details of the modifications are shown in figures 2 to 4. The airplane was designed for a gross weight of 1000 pounds and was powered with a four-cylinder, horizontally opposed, air-cooled engine, rated 50 horsepower at 2300 rpm.

General dimensions and areas of the original and the modified airplanes are in table I. The modifications made to the original airplane are considered ones that could be reasonably made to airplanes already in service.

The rearward shift in the center-of-gravity position for the modified airplane was caused by the additional weight of the larger horizontal and vertical tails. The loading conditions shown represent the most extreme loadings that the airplane might be expected to encounter.

In addition to the modifications indicated, the modified airplane had the thrust axis depressed 7° by tilting the engine nose down. (See fig. 2.) The inboard end of the elevator on the modified horizontal tail terminated 28 inches from the plane of symmetry as shown in figures 1(c) and 3. The reduced rudder travel also caused a proportional decrease in the travel of the steerable tail wheel since the tail wheel was controlled through movement of the rudder.

TESTS, RESULTS, AND DISCUSSION

Discussion of Modifications

The first modification made to the airplane was to depress the thrust axis. The purpose of this modification was to decrease the

adverse direct-thrust effect and thus to increase the up-elevator angle required to stall with power on. Since these tests the NACA has made other investigations of the effect of tilting the thrust axis. (See reference 1.)

The washout of the wing was varied over the range of 0° to 5° before 5° was chosen for the final configuration. Wing incidence was set at various positions between 1.8° and -1.2°. The combination of wing washout and incidence in the final configuration increased the airplane attitude at any given speed; the increase eased the problem of making three-point landings and at the same time reduced the tendency toward inadvertent stalling because of the increased attitude. The washout also reduced the tendency for tip stalling.

Moving the elevators out of the propeller slipstream was considered the most effective of the modifications tried in the attempt to reduce the difference between the elevator angles required to stall in the power-on and power-off conditions. The effect of this modification was first tested by removing the fabric from the inboard end of the elevator. When the larger tail was built by adding structure to the original tail, the elevators were rebuilt so that the inboard part of the original elevator became part of the fixed stabilizer as shown in figures 1(c) and 3. The increased thickness of the stabilizer shown in figure 1(c) was merely to permit the elevator torque tube to move within the surfaces. A third horizontal tail surface intermediate in span and area between the original and the rebuilt tails was built and used in flight tests but was not as effective as the rebuilt tail which was used in the final configuration.

Other structural changes that were tried consisted of adding flaps at the wing root that were set at an upward deflected position and increasing the positive camber on the stabilizer. The reflex flaps increased the angle of attack at the tail and decreased the wing pitching moment. The increase in angle of attack at the tail made necessary an increased up-elevator angle to stall, and the decrease in wing pitching moment reduced the elevator angle required for landing. The addition of these flaps was considered too complicated and expensive for production and mass modification of airplanes now in service and therefore was abandoned. The camber on the stabilizer increased the elevator angle required for stalling, particularly with power on, but also increased the elevator angle required in landing.

The modifications discussed up to this point improved the stalling characteristics by preventing a complete stall of the wing. A center-section stall was found to occur, however, which resulted in a pitching oscillation of the airplane. In an effort to eliminate

this pitching oscillation, the break at the center section caused by changing the wing incidence was faired alternately by fabric fillets, balsa fillets, and sheet-metal fairing over the entire center section. The center-section stall could not be eliminated, but the balsa fillets produced the best results and were used in the final configuration. These fillets may be seen in figure 1(c).

The elevator gap was sealed to increase the effectiveness of the elevator. This change resulted in an increase in the elevator deflection required to stall with power off although there was no great effect on the elevator deflection required to stall with power on or to land. The modification was therefore abandoned.

The elevator travel was limited at several values during the tests of various other modifications. It was limited to the values given in table I for the final configuration. The down-elevator travel was limited because the large down-elevator travel of the original airplane served no useful purpose. The rearward movement of the center-of-gravity range caused by the added weight of the larger tail was not an intentional move but was not resisted because this movement aided in producing three-point landings. At the time the enlarged vertical tail was added to reduce the adverse yaw due to ailerons, the aileron travel was also limited for the same purpose but was returned to normal because of the resulting low rolling velocities obtained at low forward speeds. The results for only the original airplane and final modification are given because complete measurements were not made on other less satisfactory configurations.

Longitudinal Stability and Control

The static longitudinal stability of the airplane was measured by recording the elevator angles and the elevator control forces required to maintain steady flight at various speeds throughout the speed range. The center-of-gravity position for the tests of the original airplane was 27 percent of the mean aerodynamic chord and for the modified airplane was 30 percent and 37 percent of the mean aerodynamic chord. The results are presented in figures 5 and 6.

The increased longitudinal stability of the modified airplane for both the power-off and power-on conditions is apparent, even though the test center-of-gravity position of the original airplane was ahead of those of the modified airplane. This increase in static stability is the result of the increased horizontal-tail area and aspect ratio.

Dynamic longitudinal oscillations with the controls free were always well damped above the minimum speed for both airplanes.

The modified elevator was capable of producing approximately 75 percent of the theoretical maximum normal acceleration in the higher speed range of the airplane. It is believed that the elevator was also capable of producing an acceleration greater than the design maximum load factor at a speed lower than the maximum allowable diving speed.

Stalling Characteristics

Stalls from straight level flight were produced, for power-on and power-off conditions, at various center-of-gravity positions. Entry to the stalled condition was made by a gradual reduction in airspeed with the wings held laterally level. Time histories of typical stalls from straight and level flight are shown in figures 7 and 8.

Power off.- During the power-off stall, the time history of which is shown in figure 7(a) for the original airplane, the pilot held the elevator full up and attempted to control the motions of the airplane first with rudder and ailerons and then with ailerons alone. Instability occurred about all three axes as shown by the angular velocities and the normal acceleration. Figure 7(b) shows a power-off stall in the modified airplane in which the pilot held the elevator full up and attempted to control the airplane by use of the ailerons. This figure indicates that some slight motions of the airplane occurred which were not initiated by the pilot but that a surplus of aileron and rudder control was available to counteract the rolling velocities that existed. A mild pitching oscillation of constant amplitude set in after the elevator had been held up for a long period. Comparison of figures 7(a) and 7(b) shows that motions accompanying the stall were small for the modified airplane as compared with the motions for the original airplane.

Power on.- Figure 8(a) shows the time history of a power-on stall in the original airplane in which the pilot pulled the stick back slowly and held the ailerons and rudder essentially fixed. Less than one-third of the available up-elevator travel was used to produce this stall with the result that large angular velocities were not permitted to develop. Another power-on stall in the original airplane during which all controls were used and full up-elevator travel was reached is shown in figure 8(b). This figure shows the large rolling and yawing velocities that resulted when lateral instability occurred at the stall. It also shows that a divergent longitudinal oscillation had developed. Additional tests at different center-of-gravity positions

indicated similar rolling instability at the stall. The roll could not be controlled by the ailerons, although some measure of lateral control could be had by skillful use of the rudder.

A slowly diverging longitudinal oscillation with a period of approximately 8 seconds occurred at the power-on stall in the modified airplane if the controls were held fixed. This oscillation is shown in figure 8(c), a time history of a power-on stall in which the controls were held essentially fixed. Although almost full up elevator was used, lateral motions which did not result from pilot's action were very small. Comparison of figures 8(b) and 8(c) shows that motions accompanying the stall were small for the modified airplane as compared with the motions for the original airplane. A pitching oscillation of increasing amplitude developed and mild lateral instability occurred at the end of three cycles. This condition was not considered dangerous as the stick had to be held back at or beyond the stall position for approximately 20 seconds after the initial stall occurred before the lateral instability developed. It is believed that even a novice pilot would recognize in the long-period pitching oscillation a warning of incipient lateral instability. If the stick was held back beyond the stalling position with power on for a sufficient length of time (about four oscillations), the airplane would be in a vertical attitude from which a whip stall would occur.

Elevator angles above which instability existed are shown by the curves of figure 9. This instability was predominantly lateral for the original airplane and predominantly longitudinal for the modified airplane. The difference between the elevator angles required to produce instability with power off and power on is approximately 12° for the original airplane as compared with 3° for the modified airplane.

Figure 10 shows a time history of a stall in the original airplane resulting from a tight left turn with power on. The airplane yawed and rolled abruptly to the right out of the turn. In turning flight the instability associated with the complete stall was essentially the same as that in straight flight. The violence of all motions accompanying the stall was increased in turning flight somewhat, because of the effectively increased wing loading under the accelerated conditions. Accident data published by the Civil Aeronautics Administration have shown that approximately one-half the stall and spin accidents originate in stalls out of turns similar to that shown in figure 10. In turning flight with the modified airplane it was possible to pull the stick all the way back without stalling either with power on or off. The stall could not be reached

because of the additional up-elevator deflection required to produce pitching velocity in the turn. The danger of stalls out of turns was thus eliminated.

The up-elevator deflection could not be limited to the extent required to make the modified airplane stallproof, as had been originally planned, because of the up-elevator deflection required to make a three-point landing. The average up-elevator deflection required for a three-point landing with the center of gravity at 30 percent of the mean aerodynamic chord was 27.5° and, with the center of gravity at 37 percent of the mean aerodynamic chord, was 17.5°. The decrease in incidence of the wing and the increase in washout increased the airplane attitude at any given speed; the airplane was thus permitted to make three-point landings with smaller up-elevator deflections.

Spinning Characteristics

The original airplane could easily be spun from the stall, with power on or power off, by crossing the rudder and aileron controls. Recovery was quickly made either by releasing or by centering the controls.

It was found that the airplane incorporating all the changes except limiting the rudder travel to ±15° could be held in a steady spin to the left. The spin could be started only by making a pull-up with full power on and abruptly applying 33° left rudder, full right aileron, and full up-elevator just before the stall. If the left rudder was decreased to 15° after a steady state of rotation was obtained (the other controls being held as at the start of the spin), the airplane would recover after several turns either with power on or power off. The rudder travel was therefore limited to ±15° and all attempts to produce a spin failed. The modified airplane was thus considered spinproof because autorotation could not be produced nor sustained if produced by some unknown means.

Spin tests were not conducted with the rudder travel limited to ±15° for any of the individual modifications; so it is not known whether the original airplane or the airplane with any one combination of the changes other than all of them would be spinproof with the rudder travel limited.

Lateral Stability and Control

The angle of bank that could be obtained in steady sideslip was reduced because of the limited rudder travel. The maximum angle of

bank in the modified airplane with ±15° rudder travel was approximately 20° as compared with approximately 40° in the original airplane with ±33° rudder travel at an airspeed of 80 miles per hour.

The adverse yawing in rudder-fixed rolls was reduced because of the increased directional stability provided by the larger vertical tail. The limited rudder travel was sufficient to counteract the adverse yaw of the ailerons.

Performance Characteristics of the Modified Airplane

Accurate measurements of the relative performance of the original and the modified airplanes were not made but, from the nature of the changes, only a small decrease in maximum level flight speed and maximum rate of climb would be expected. The adverse effect on performance could probably be alleviated, however, if the features involved in the modifications were incorporated in an airplane in the design stage. No aerobatics were attempted with the modified airplane.

Ground Handling of the Modified Airplane

The tail of the modified airplane could be held down when the engine was turned up to full power on the ground with the center of gravity at the forward position of 30 percent of the mean aerodynamic chord. The airplane with the limited rudder travel could not be taxied satisfactorily without the use of brakes. It is believed that improved taxying could have been obtained by causing the tail wheel to move through its original travel when the rudder travel was limited.

The pilot did not encounter any difficulty in raising the tail during a take-off run, nor did the limited rudder travel cause any noticeable loss of directional control during take-off. No cross-wind take-off and landing data are available.

CONCLUDING REMARKS

A series of modifications were incorporated in a typical light airplane to increase its safety. The modifications were such that they could be reasonably made to airplanes already in service. The results of the investigation showed the modified airplane to possess the following inherent safety characteristics:

1. Motions accompanying the stall were greatly reduced. A neutral longitudinal oscillation occurred with power off, and a divergent longitudinal oscillation occurred with power on if the elevator was held up beyond the initial stall. The resulting longitudinal motion was considered less dangerous than the lateral instability encountered on the original airplane.

2. In turns the stick was held full back without stalling.

3. The airplane could not be spun, power on or power off, with any setting of the controls.

4. The general flying characteristics were not materially altered in normal flight.

Langley Memorial Aeronautical Laboratory
National Advisory Committee for Aeronautics
Langley Field, Va., August 9, 1946

REFERENCE

1. Goett, Harry J., and Delany, Noel K.: Effect of Tilt of the Propeller Axis on the Longitudinal-Stability Characteristics of Single-Engine Airplanes. NACA ACR No. 4E29, 1944.

TABLE I

GENERAL DIMENSIONS AND AREAS OF THE ORIGINAL

AND THE MODIFIED AIRPLANES

	Original	Modified (dashed line indicates no change)
Wing:		
Airfoil section	U.S.A. 35-B	----------
Plan form	Rectangular with rounded tips	----------
Area (including section through fuselage), sq ft .	178.5	----------
Mean aerodynamic chord, in. .	60.6	----------
Aspect ratio	6.94	----------
Incidence at root, deg	1.8	-1.2
Dihedral, deg	1	----------
Washout (see fig. 1(b)), deg .	Approx. 3	5
Ailerons (Frise type):		
Area each aileron, sq ft .	9.6	----------
Maximum travel, deg	Approx. ±19	----------
Horizontal tail (see figs. 1(c) and 3):		
Stabilizer (adjustable):		
Area, sq ft	14.65	25.9
Travel (with respect to original thrust axis), deg	5, tail heavy; 1.5 nose heavy	----------
Elevator:		
Area, sq ft	10.64	10.8
Travel (with respect to original thrust axis), deg	36 up 28 down	30.5 up 10.5 down

NATIONAL ADVISORY COMMITTEE FOR AERONAUTICS

TABLE I - Concluded

GENERAL DIMENSIONS AND AREAS - Concluded

	Original	Modified (dashed line indicates no change)
Vertical tail (see figs. 1(b) and 4):		
Fin:		
Area, sq ft	4.02	7.6
Rudder:		
Area, sq ft	6.55 (including horn balance)	5.9 (no horn balance)
Travel, deg	±33	±15
Center of gravity:		
Forward position (12 gal gas 190 lb passenger and 20 lb parachute, 110 lb pilot and 20 lb parachute), percent M.A.C.	24.0	30.0
Rear position (2 gal gas, no passenger, 190 lb pilot and 20 lb parachute), percent M.A.C.	30.0	37.0

NATIONAL ADVISORY COMMITTEE FOR AERONAUTICS

(a) Three-quarter front view.

Figure 1.- Airplane used in tests.

(b) Side view.

Figure 1.- Continued.

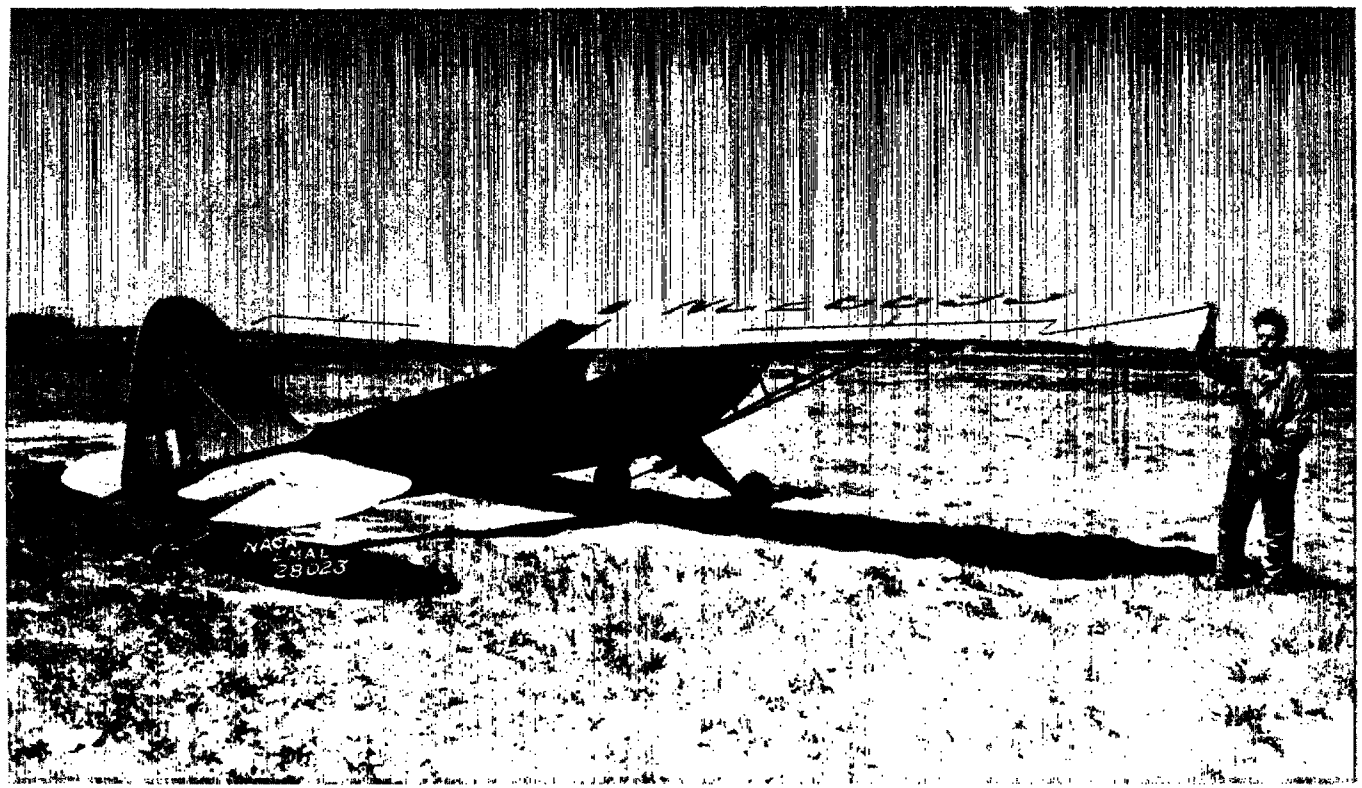

(c) Three-quarter rear view.

Figure 1.- Concluded.

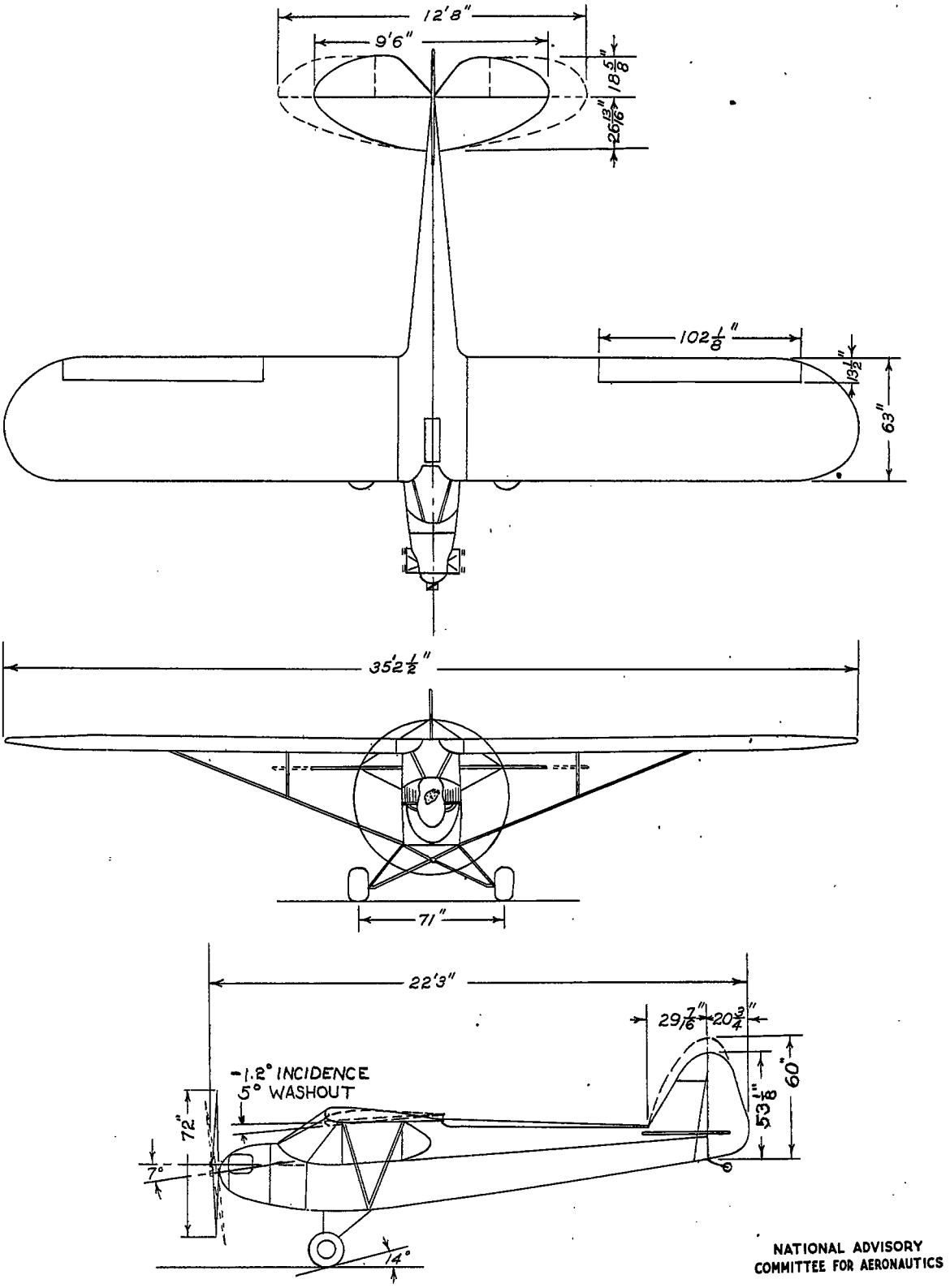

Figure 2.- Three-view drawing of the test airplane showing modifications made to standard model. (Dashed lines indicate modifications.)

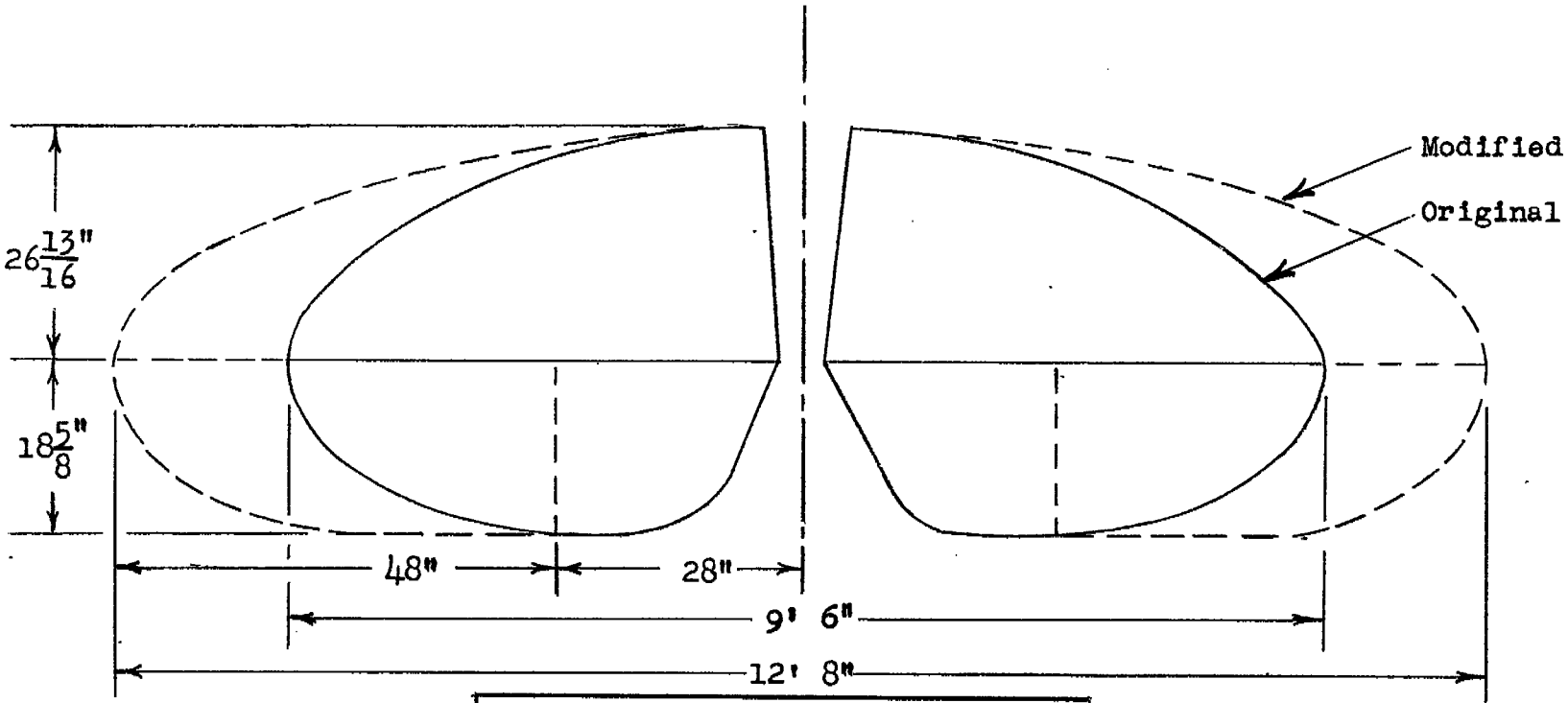

AREAS (sq ft)		
	Original	Modified
Stabilizer	14.65	25.9
Elevator	10.64	10.8
Total	25.29	36.7

NATIONAL ADVISORY COMMITTEE FOR AERONAUTICS

Figure 3.- Plan form of original and modified horizontal tail surfaces of the airplane used in the tests.

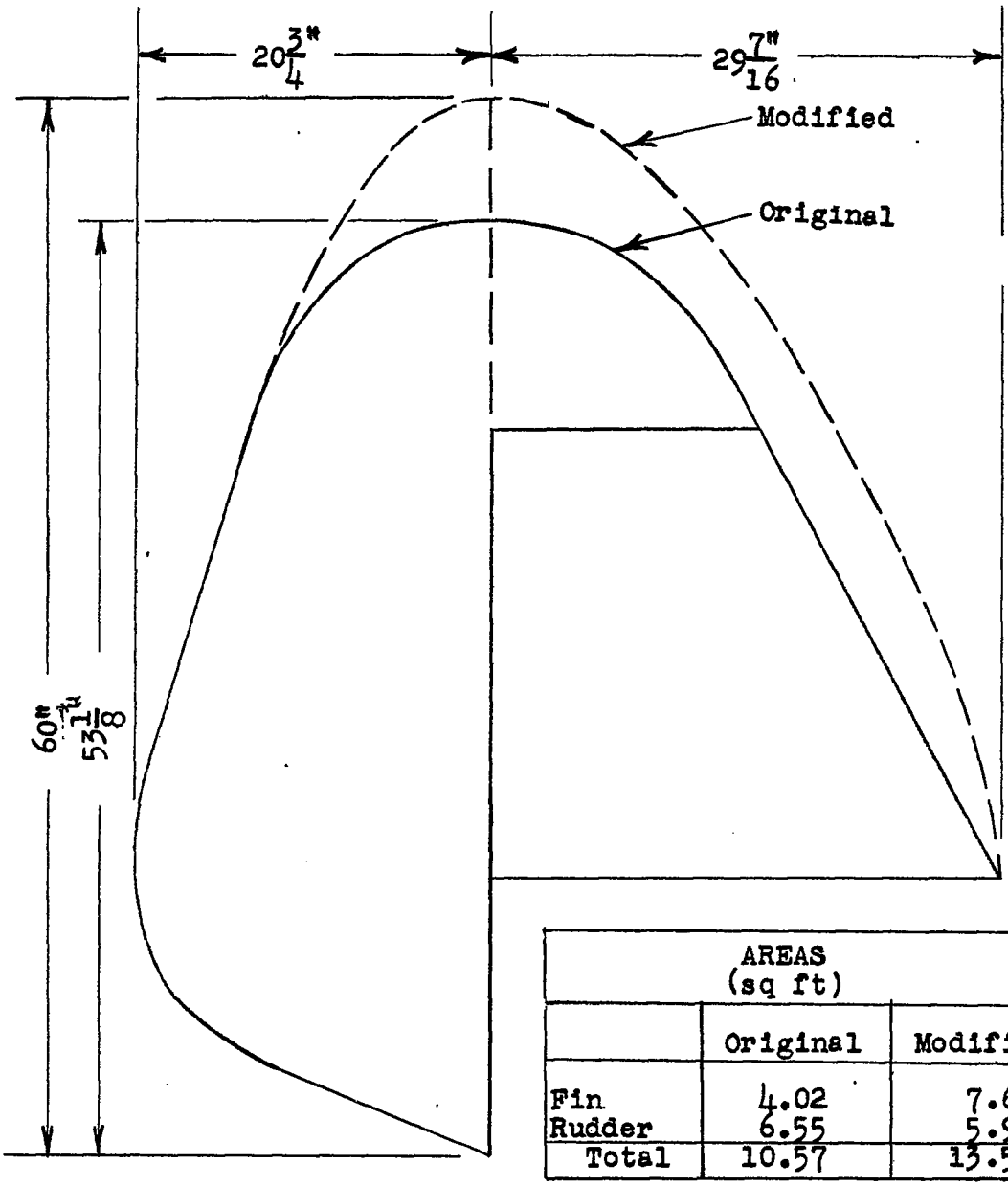

AREAS (sq ft)		
	Original	Modified
Fin	4.02	7.6
Rudder	6.55	5.9
Total	10.57	13.5

NATIONAL ADVISORY
COMMITTEE FOR AERONAUTICS

Figure 4.- Original and modified vertical tail surfaces of the airplane used in the tests.

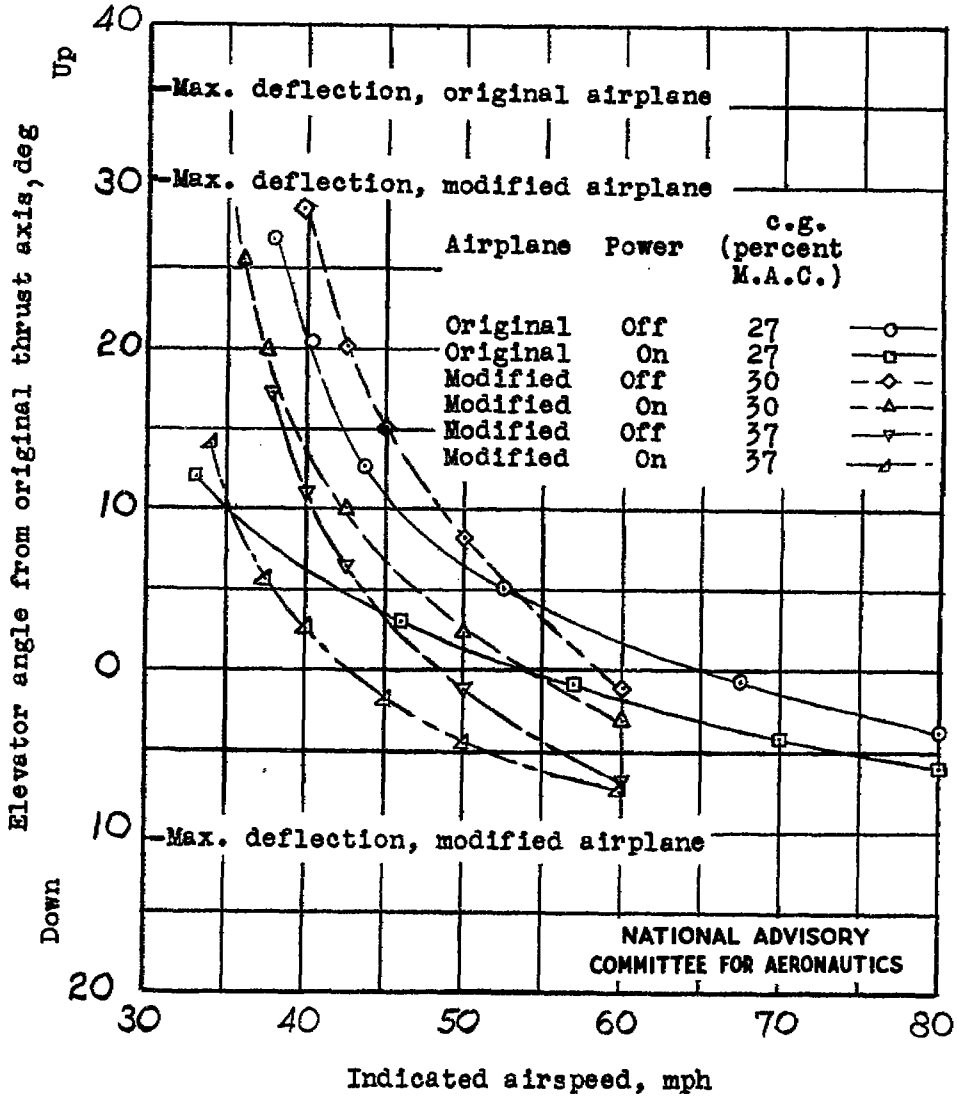

Figure 5.- Variation of elevator angle for trim with indicated airspeed for the original and modified airplanes. Stabilizer set full tail heavy.

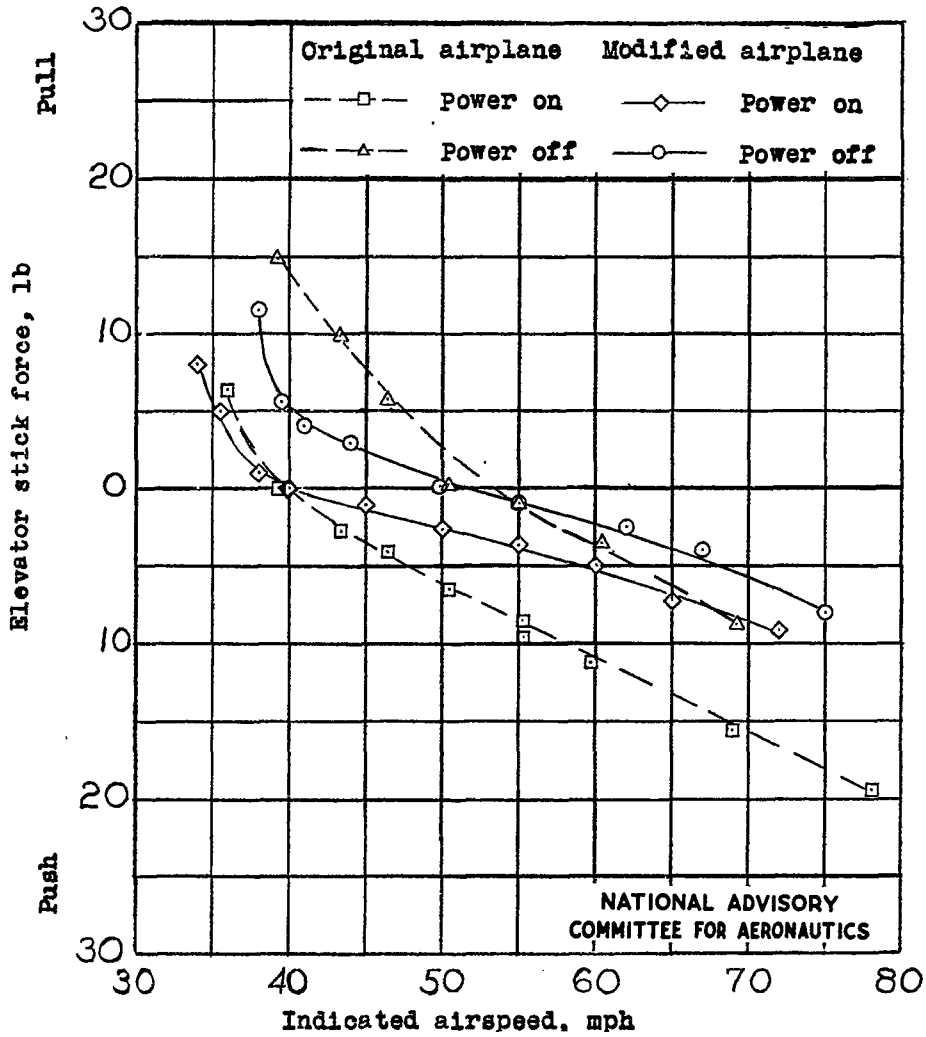

Figure 6.- Variation of stick force with indicated airspeed in the original airplane with center of gravity at 27 percent M.A.C. and the modified airplane with the center of gravity at 37 percent M.A.C. Stabilizer set full tail heavy.

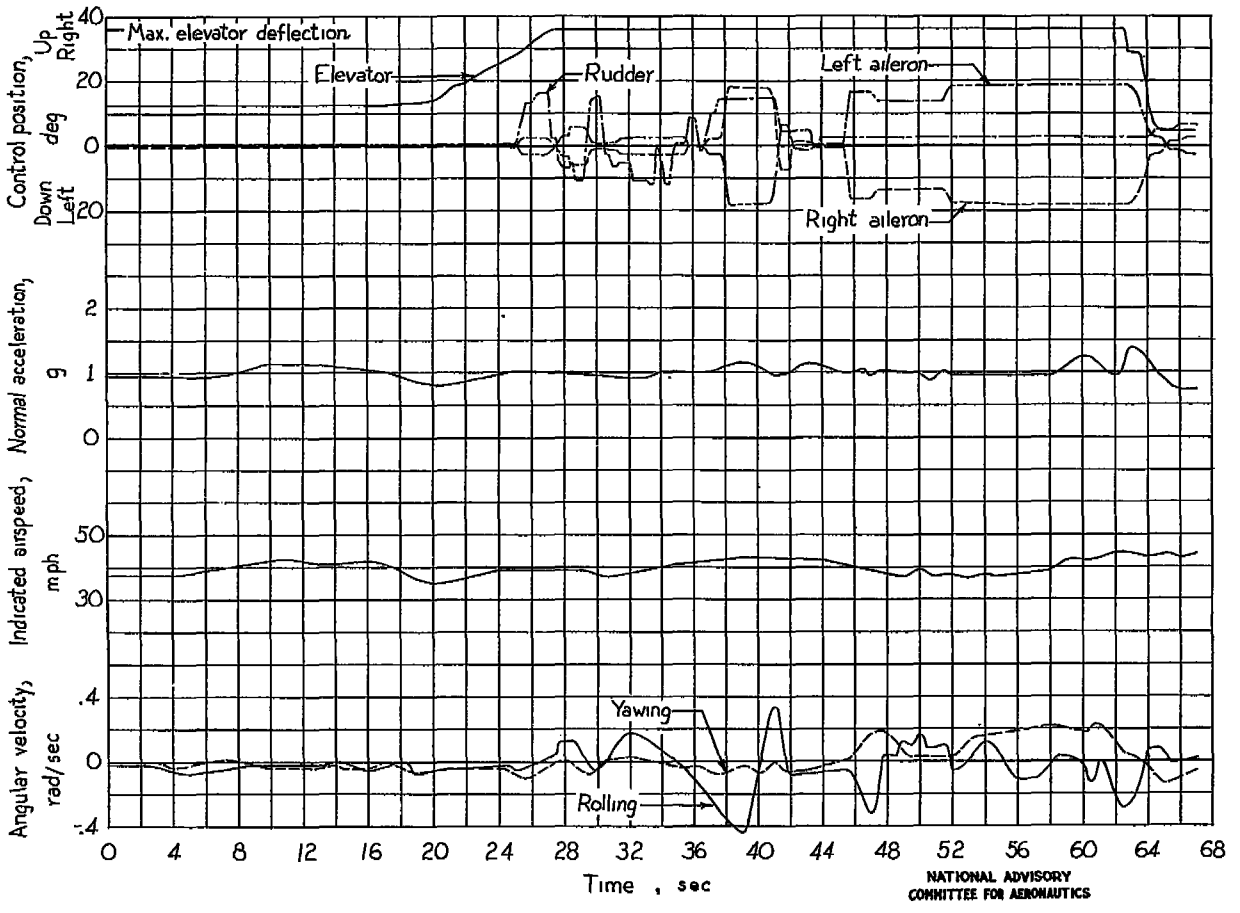

(a) Original airplane; attempt made to control motions of airplane.

Figure 7.- Time history of a stall with power off. Stabilizer set full tail heavy.

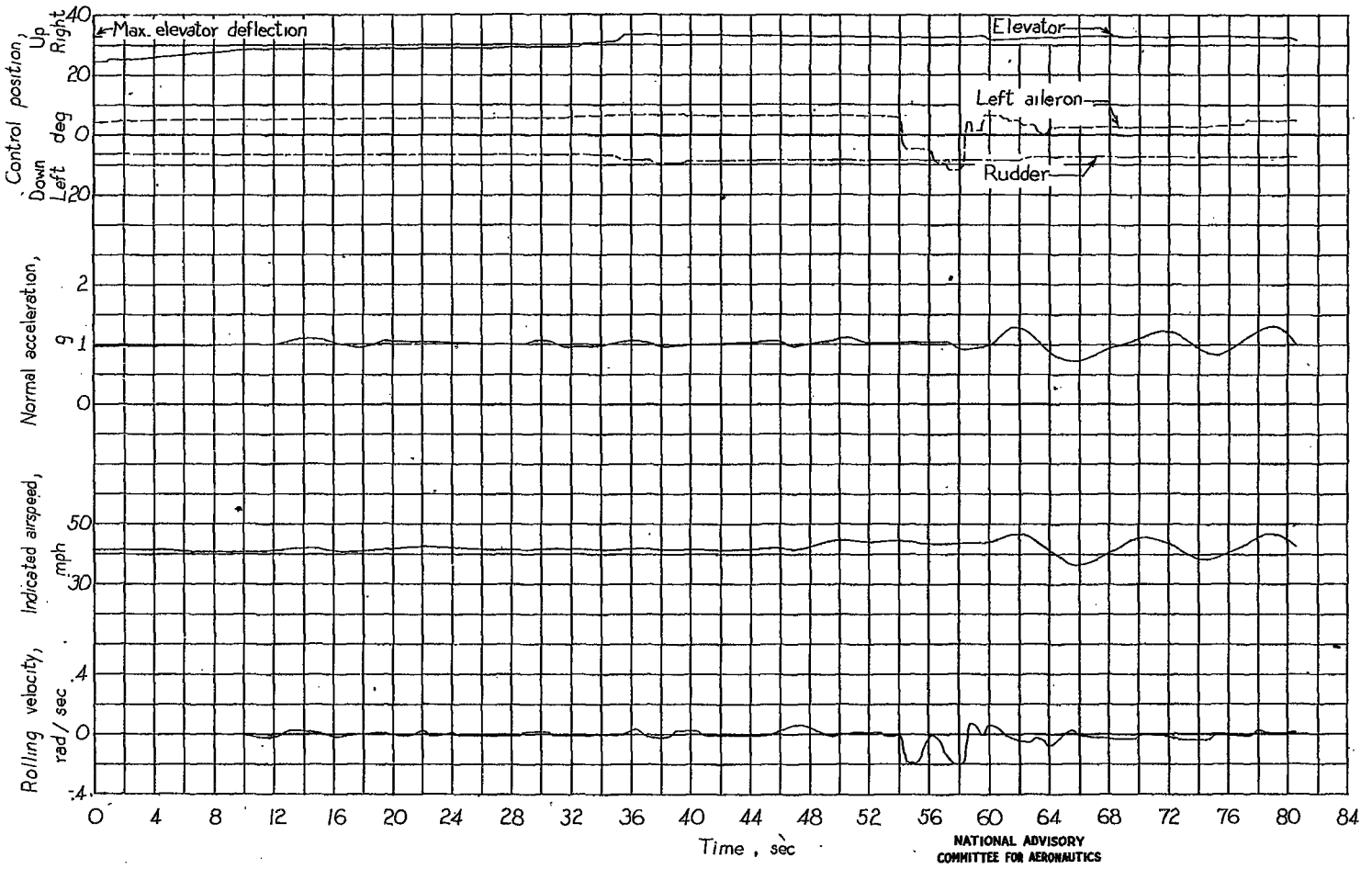

(b) Modified airplane; attempt made to control motions of airplane.

Figure 7.- Concluded.

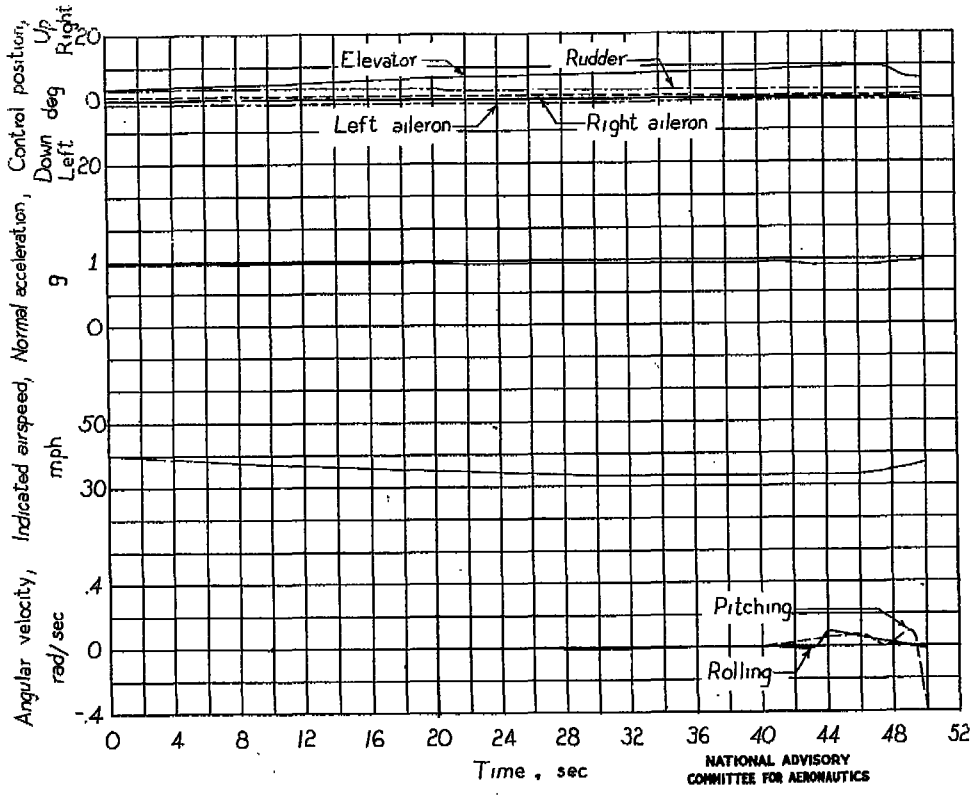

(a) Original airplane; controls held essentially fixed.

Figure 8.- Time history of a stall with power on. Stabilizer set full tail heavy.

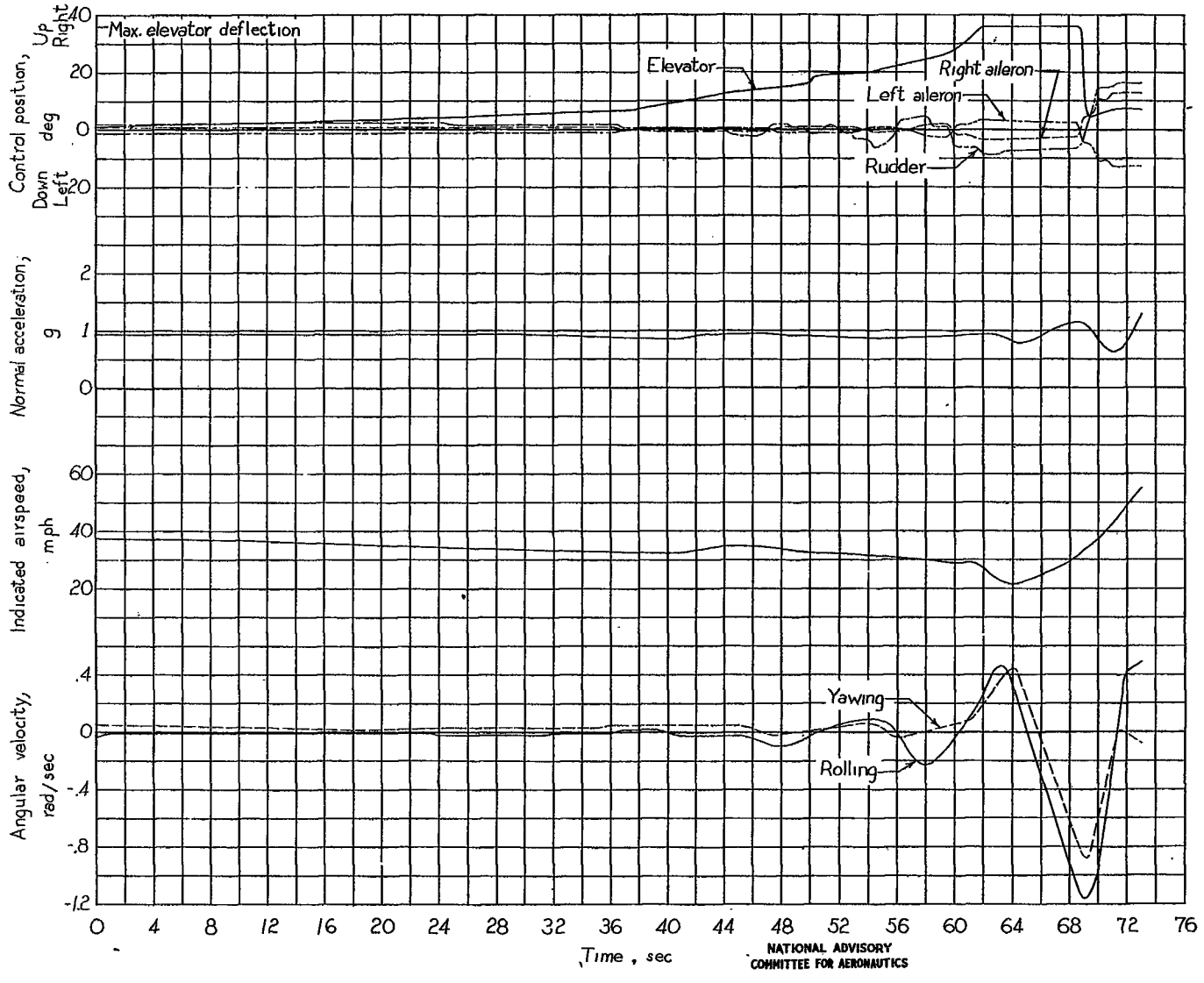

(b) Original airplane; attempt made to control motions of airplane.

Figure 8.- Continued.

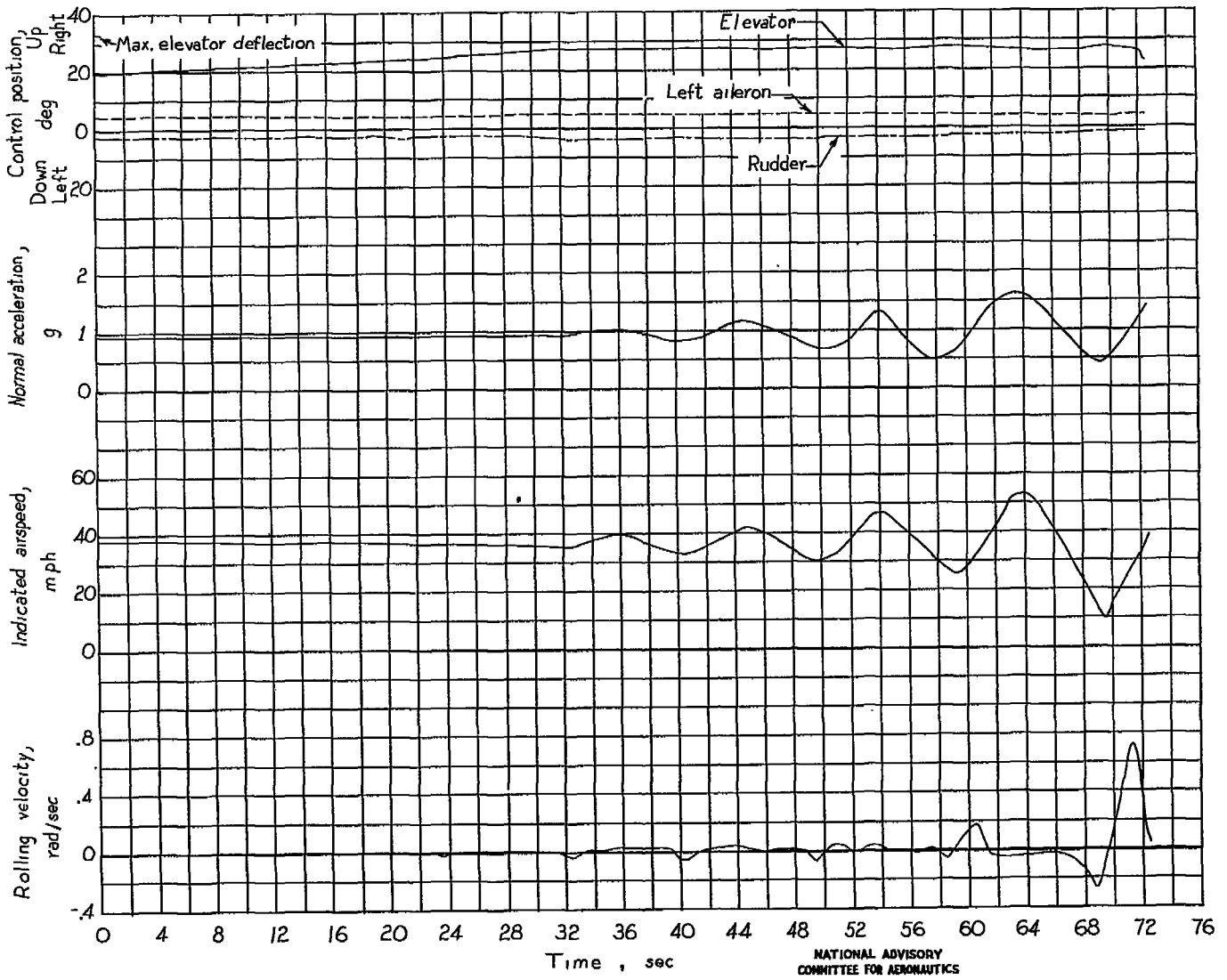

(c) Modified airplane; controls held essentially fixed.

Figure 8.- Concluded.

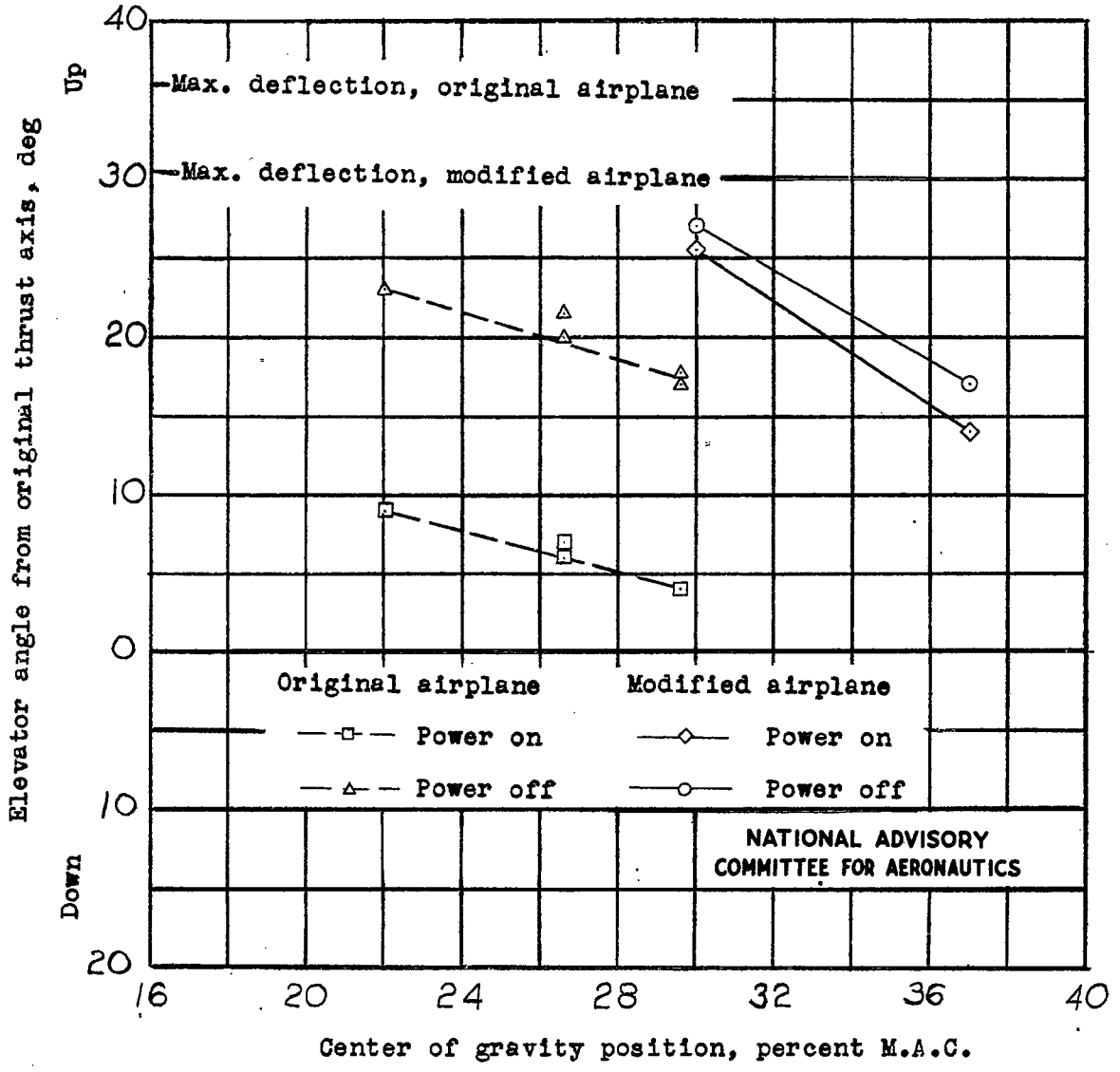

Figure 9.- Elevator angles above which instability existed for various positions of center of gravity with the stabilizer full tail heavy for the original and the modified airplanes.

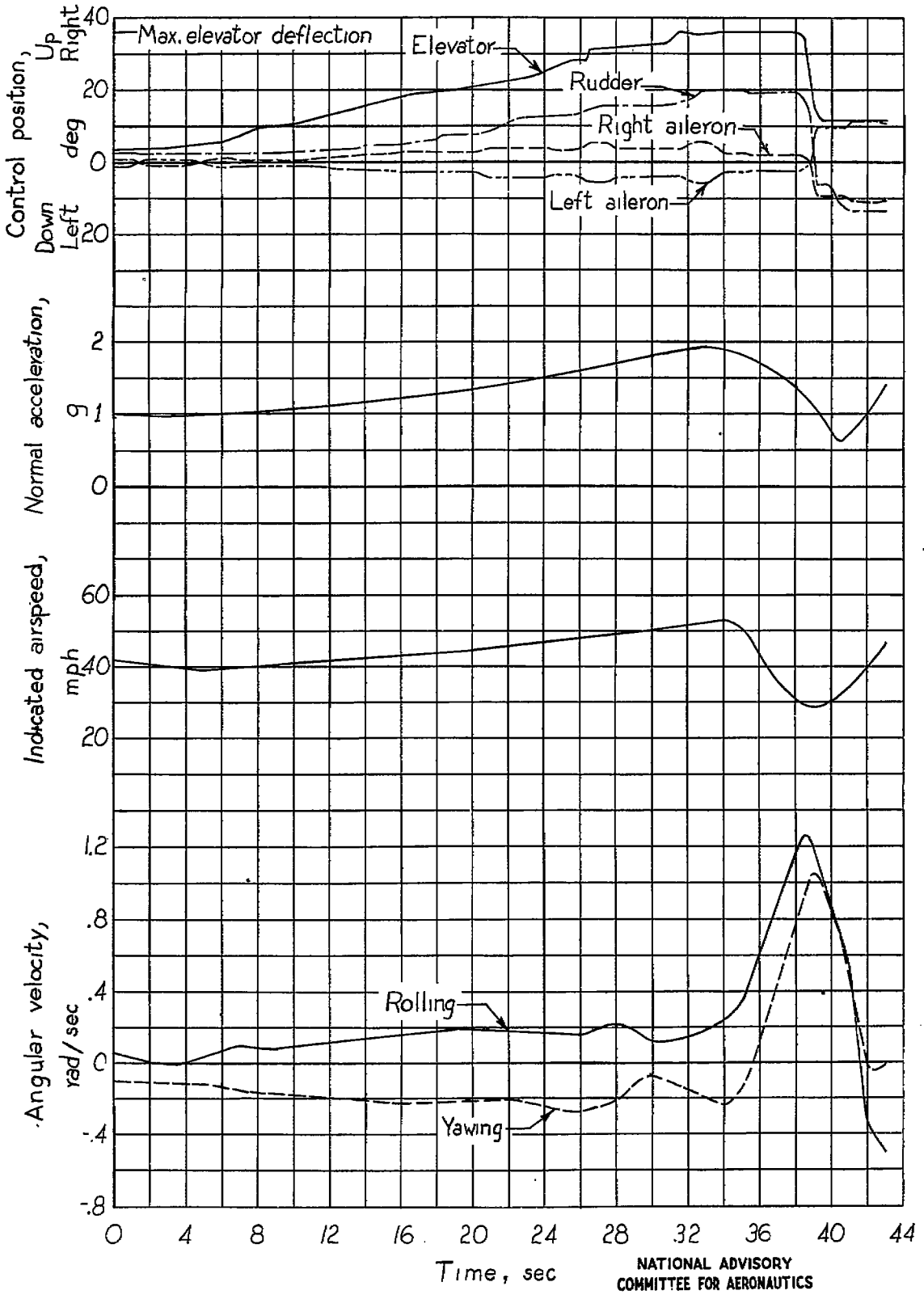

Figure 10.- Time history of a stall out of a tight left turn with power on. Original airplane; stabilizer set full tail heavy.