NATIONAL ADVISORY COMMITTEE FOR AERONAUTICS

AUG 26 1947

TECHNICAL NOTE

No. 1408

INSTANTANEOUS ULTRAVIOLET KNOCK SPECTRA CORRELATED WITH HIGH-SPEED PHOTOGRAPHS

By M. A. Hirshfeld and Cearcy D. Miller

Flight Propulsion Research Laboratory
Cleveland, Ohio

FOR REFERENCE

NOT TO BE TAKEN FROM THIS ROOM

Washington
August 1947

N A C A LIBRARY
LANGLEY MEMORIAL AERONAUTICAL
LABORATORY
Langley Field, Va.

NASA Technical Library
3 1176 01425 8314

NATIONAL ADVISORY COMMITTEE FOR AERONAUTICS

TECHNICAL NOTE NO. 1408

INSTANTANEOUS ULTRAVIOLET KNOCK SPECTRA CORRELATED WITH HIGH-SPEED PHOTOGRAPHS

By M. A. Hirshfeld and Cearcy D. Miller

SUMMARY

An investigation was conducted to obtain a record of any chemical changes directly associated with knock in a spark-ignition engine on a greatly magnified time scale by means of coordinated high-speed motion pictures and spectrograms. On the basis of earlier high-speed motion pictures of knocking combustion, knock was assumed to occur in the form of a wave that traverses the combustion chamber at speeds greater than the speed of sound. By using a high-voltage underwater spark of extremely short duration (about 10 microsec) and high intensity, absorption spectrograms of the combustion gases were obtained for a very short interval of the combustion cycle. Such spectrograms were taken before and after the occurrence of knock. High-speed motion pictures of the same cycle were taken and served to establish the time of exposure of the spectrogram relative to the combustion process. The engine was fired for only one cycle during each run. Quartz windows in the cylinder head allowed the passage of light through the end zone of the combustion chamber.

Spectrograms taken in the near ultraviolet range are presented. Of the bands that would be expected to occur, only the hydroxyl-radical bands near 3064 and 2811 angstrom units appeared. These bands first appeared when combustion started in the end zone and became stronger as combustion progressed in that region; the bands also appeared after knock. Therefore, there was no positive evidence of a chemical change that would affect the absorption spectrum in the region from 2600 to 4000 angstrom units. Lines of copper, silver, and iron, present in the combustion-chamber walls, also appeared in the spectrograms; these lines were directly associated with knock; that is, they did not appear in the spectrograms taken before knock but did appear in those taken after knock. The occurrence of metallic absorption is probably not directly associated with a chemical reaction, but apparently conditions produced by the knock reaction are responsible for their appearance.

INTRODUCTION

The chemistry of the combustion associated with knock in the spark-ignition engine has been under investigation for many years. Although the exact nature of either normal or knocking combustion is not known, some specific differences between the two have been observed. In 1932, Rassweiler and Withrow studied the emission spectra of flames in a gasoline engine and showed (reference 1) that the last part of the charge to burn, the so-called end zone, emits the typical bands of hydrocarbon flames with less intensity in knocking than in nonknocking combustion. The same authors studied the absorption spectra of engine flames in 1933 (reference 2). The presence of formaldehyde and other unidentified compounds was indicated in the end zone before the arrival of the flame whenever knock occurred; if no knock occurred, no formaldehyde appeared. These results were interpreted as indicating the association of knock with slow oxidation in the end zone before the arrival of the flame. A large increase in the concentration of nitrogen oxides in the exhaust gas during knocking operation as compared with nonknocking operation was shown in 1937 by Hanson and Egerton (reference 3).

The chemical reactions studied in the work of references 1 to 3 were those of the combustion process as a whole rather than reactions identified chronologically with the occurrence of knock. That knock may be distinguished from the rest of the combustion process is evident from photographs taken with the NACA high-speed and ultrahigh-speed cameras (references 4 to 7). In 1943, Miller and Olsen (reference 4) showed that knock is characterized by a very rapid change in the appearance of the combustion gases as recorded by the high-speed camera at 40,000 frames per second; this change consists in the blurring of the inflamed region followed within a very short time by the complete clearing of the combustion chamber of all visual evidences of combustion. In some photographs in reference 5, knock is complete in less than 50 microseconds. The blurring, or rather the phenomenon directly responsible for the blurring, is referred to as "knock" in the present report.

In reference 6, analysis of the motion pictures showed that knock occurs in the form of a wave, similar in many respects to a detonation wave, traveling initially at rates ranging from the speed of sound in the burned gases to twice that speed. This conclusion is supported by a motion picture of knock taken at the rate of 200,000 frames per second (reference 7). The photographs in reference 7 show a wave, interpreted as knock, which started from the rear edge of the combustion zone and traveled through the incompletely burned gases at a speed about twice that of sound in the burned gas.

The precipitation of incandescent and opaque particles (presumably free carbon) immediately after the occurrence of knock has been shown in the motion pictures in reference 7, in figures 6 and 7 of reference 6, and in other motion pictures as yet unpublished; this effect may be considered evidence of chemical reactions associated with knock different from the chemical reactions in nonknocking combustion.

The object of the present investigation was to determine whether any other evidence of a chemical reaction concurrent with knock could be found by comparing the absorption spectra of the combustion gases before and after knock. Because many of the final and intermediate products of the combustion of hydrocarbons have characteristic bands in the visible and near ultraviolet regions, it seemed likely that the occurrence of a chemical reaction could be shown in this way. By the use of an intense light source of very short duration in conjunction with a fast spectrograph, a satisfactory exposure of an absorption spectrum was obtained in an interval of approximately 7 microseconds during one firing cycle. A high-speed schlieren motion picture of the same cycle was taken and served to establish accurately and graphically the time at which the spectrogram was exposed relative to the occurrence of knock. The extreme requirements with respect to intensity and duration enforced compromises in the design of the light source, which made it not entirely satisfactory in other respects, such as continuity of the spectrum, freedom from interfering lines, and uniformity of intensity.

APPARATUS AND PROCEDURE

The combustion apparatus, which has been described in its original form in reference 8, is a single-cylinder engine of 5-inch bore and 7-inch stroke with a specially designed cylinder head that allows a view of a large part of the combustion chamber through glass or quartz windows. The cylinder and the head were maintained at operating temperature by circulating heated glycerine through jacket passages. The engine was turned up to speed by an electric motor and was fired for only one cycle.

For the present investigation the engine was adapted to spark ignition and to ultraviolet spectroscopy, as indicated in figure 1. As may be seen from the figure, the visible portion of the combustion chamber has the shape of a flat disk. The flat-disk portion of the chamber is connected with the interior of the engine cylinder by a vertical passage whose cross section is a narrow rectangle.

In adapting the engine, as described in references 8 and 9, to spark ignition, the changes necessary were the installation of

spark plugs, a decrease in the compression ratio, and changes in the fuel system. The effective compression ratio computed from the measured maximum compression pressure was about 8.0. The fuel was injected directly into the cylinder at about 160° B.T.C. to allow enough time for evaporation in the cylinder. Because the variation in the amount of fuel evaporated made knowledge of the fuel-air ratio uncertain, the fuel quantity was set by trial and error for maximum knock at the prevailing conditions.

In adapting the cylinder head to spectroscopy, fused quartz windows (1 in. thick and $3\frac{1}{2}$ in. in diameter) instead of glass were used on one side of the combustion chamber to transmit the ultraviolet light. A stellite mirror on the opposite side returned the light through the combustion chamber. With this arrangement the light beam for the spectrogram traversed the combustion chamber twice, making a total path length of 2 inches.

In order to facilitate synchronization of the combustion and photographic events, the timing of the fuel injection, the ignition spark, the camera shutter, and other events was accomplished by adjustable electrical contacts coupled to the crankshaft. A system of interlocking relays assured that the various events occurred only during the firing cycle.

The following engine operating conditions were held constant:

Jacket temperature, °F	250
Spark advance, deg B.T.C.	15
Fuel	M-4
Engine speed, rpm	600
Intake pressure and temperature	Atmospheric

(M-4 is a reference fuel with a rating near the zero end of the octane scale.)

A schematic view of the optical system is given in figure 2. The light source used for the absorption spectrograms was a high-voltage underwater spark. The light from the spark was collimated by a quartz lens and then entered the combustion chamber through the quartz windows; the stellite mirror on the far side of the chamber returned the light along a path that made a small angle with its original path. After passing through another quartz lens, the light was reflected through a right angle by a quartz prism and formed an image of the spark on the spectrograph slit. In order to prevent reflections from the quartz windows from entering the spectrograph, both windows were tilted by means of spacers to deflect the reflections from the optical axis.

A Gaertner Scientific Corporation small quartz spectrograph, which has fairly high photographic speed (camera-lens relative aperture, about f/8) but low dispersion (50 A per mm at 3000 A), was used to record the spectra. The characteristics of the photographic plates used (Eastman spectroscopic plates 103-0) and of the optical system, combined with the low dispersion of the spectrograph for wavelengths greater than 4000 angstrom units, made observation difficult in this region.

The optical system as set up exhibits what may be called a schlieren effect. Any light from the spark that was appreciably refracted by the gases in the combustion chamber could not be focused by the second quartz lens on the spectrograph slit. During combustion, temperature and density gradients exist, which are probably large enough to cause a considerable loss of intensity in the spectrograms taken close to the time of knock, especially those taken immediately before knock.

The underwater spark consisted of a condenser discharge across a spark gap that was under distilled water; the spark-box design was copied from the one described in reference 10 with minor changes. The energy source was an 0.08-microfarad condenser charged to 50 kilovolts. The duration of the spark was determined by focusing an image of the spark on a high-speed rotating film drum and measuring the streak produced on the developed film. The duration was approximately 7 microseconds and the intensity was sufficient to yield a satisfactory exposure with one discharge. The spectrum of the light source was continuous from 5000 to 2500 angstrom units, except for some absorption bands due to hydroxyl radicals in the water vapor near the spark and some metallic lines due to the electrodes. Gold electrodes were used to minimize the number of lines from this source.

The underwater spark was set off at predetermined times by means of the circuit shown in figure 3. In series with the main spark were an air gap and an auxiliary low-voltage spark actuated by the contactor coupled to the crankshaft. The variation in time of occurrence of the underwater spark from run to run was approximately 3° of crankshaft rotation. No better reproducibility was necessary because the variation in time of occurrence of knock was greater than 3° of crankshaft rotation; as a result, spectrograms exposed at various times before and after knock were obtained with a few fixed settings of the underwater spark.

The photographs of combustion were taken with the high-speed motion-picture camera (reference 11) at the rate of 40,000 frames

per second, using schlieren illumination; the path of the light is shown in figure 2. Light from a 108-watt ribbon-filament bulb was condensed, reflected toward the engine along the optical axis of the camera by a small mirror in front of the camera objective lens, and then collimated by the large schlieren lens. A mirror M near the engine reflected the light through a right angle into the combustion chamber; the light was then reflected by the stellite mirror back to the camera objective along a path that made a small angle with the original path; the camera objective lens formed (through the camera's internal optics) an image of the combustion chamber on the film. The light rays entering the combustion chamber were parallel; so the mirror M had to be at least as large as the chamber window. Because the light path was normal to the stellite mirror, the mirror M was directly in the way of the spectrographic light beam. One corner of the mirror M was therefore cut away to allow a path for the spectrographic light beam; the corresponding part of the combustion chamber, which is the upper right quadrant of the combustion chamber as seen in figure 1, does not appear in the motion picture. Some light from the underwater spark registered on the high-speed photographs and was used to identify the motion-picture frame exposed at the same time as the spectrogram. On the other hand, some of the light from the schlieren light source entered the spectrograph and interfered with the spectrograms. Trial exposures, under conditions similar to those for which the combustion spectrograms were taken, showed that the spectrogram of this light source was continuous and very weak, with sufficient intensity to affect the plate only at wavelengths greater than 4000 angstrom units.

METHOD OF ANALYSIS OF DATA

The time at which a spectrogram was exposed relative to the occurrence of knock may be determined directly from the high-speed photographs because enough light from the underwater spark entered the camera to record on the photographs. (See fig. 4, frame E-3.) The accuracy of the method is limited by two factors: (1) Some difficulty in identifying the frame in which knock occurs results in an uncertainty of one or two frames; and (2) the fact that each frame is exposed for 25 microseconds introduces some uncertainty in the time of occurrence of the spark, inasmuch as the spark may have taken place at any time during this interval. The maximum error in determining the time interval between knock and the spectrogram exposure is thought to be about $1\frac{1}{2}$ frames or 37 microseconds. When the spark occurred very close to knock, it was sometimes impossible to tell which came first; they were then assumed to have occurred simultaneously.

The measurement of wavelength in the spectrograms was made by comparison with an overlapping mercury spectrum. The positions of the lines were measured with a traveling microscope to 0.001 millimeter (0.05 A at 3000 A). The wavelength of known lines checked to within 1 angstrom unit.

The intensity of the absorption lines and bands was measured on a Leeds and Northrup recording microphotometer. With suitable adjustment, the instrument records directly the photographic density D of the negative.

For the purposes of this report the intensity, or relative density, of an absorption line I_l was defined as the photographic density of the line relative to the photographic density of the continuous background near the line:

$$I_l = D_c - D_l = \log I_o/I_{t,c} - \log I_o/I_{t,l} = \log I_{t,l} - \log I_{t,c}$$

where

D_c photographic density of continuum

D_l photographic density of absorption line

I_o original intensity of scanning beam

$I_{t,c}$ intensity of scanning beam after passing through continuum

$I_{t,l}$ intensity of scanning beam after passing through absorption line

The density of the continuum is taken as the average of the densities of the adjacent regions where no absorption lines are present.

With certain assumptions, the relative density defined is proportional to the logarithm of the percentage of light absorbed from the incident beam (at the wavelength under consideration) by the combustion gases. The most important of these assumptions is that the photographic density is related to the light incident on the emulsion by the equation:

$$D = \gamma \log E$$

where

E exposure of emulsion, meter-candle-seconds

γ constant characteristic of the emulsion defined by means of this equation

For the type of plate used, this equation is valid for values of D from 0.2 to the largest values that can be measured with the microphotometer. For smaller values of D, E decreases more rapidly than the equation indicates.

Unfortunately, the values of the density measured were not always large enough for the equation to apply. Because of the schlieren effect in the optical system providing light to the spectrograph, much of the light from the underwater spark did not reach the spectrograph. Consequently, the background intensity was sometimes so low that either D_l or both D_l and D_c were below 0.2. In such cases, because of the nature of the deviation from the equation, the resulting values of the relative density were always too low to indicate accurately the absorption by the burning gases. The runs for which this condition obtained are clearly marked.

RESULTS

Two typical motion pictures are shown in figures 4 and 5. The motion picture progresses from left to right across each row and from the top down for successive rows; the order of frames is A-1, A-2, . . . A-12, B-1, B-2, ... In the first frames of these figures, the combustion chamber appears as a white circle with one quarter cut out; the cut-out quarter represents the part of the combustion chamber through which the spectrograms were taken. The white field represents the undeflected schlieren illumination. The progress of the flame is marked by an irregular, dark, mottled zone, which moves across the chamber from right to left in the photographs, although to what extent energy is being released in different parts of the mottled zone is uncertain.

A run in which the spectrogram was exposed several frames after knock is presented in figure 4. In frame A-1, the flame has already started across the combustion chamber from the upper right. By frame D-8, the flame has swept across the visible part of the chamber and, from the appearance of this and the earlier frames of the series, the flame probably had also swept across the region through which the spectrogram was taken before the exposure of frame D-8. The only change between frames D-8 and D-11 is a slow partial disintegration of the mottled region. Comparison of frames D-11 and D-12 shows a blurring in what is left of the mottled region; by frame E-1, the blurring has covered the mottled region. (The blurring may not

appear in the reproduction as clearly as it does in the original.) This blurring is considered an indication of knock (reference 4). In frame E-3, the illuminated region in and near the normally dark quarter, indicated by an arrow, is caused by the light from the underwater spark and marks the time of exposure of the spectrogram. The spectrogram was therefore taken two or three frames after the occurrence of knock.

A run in which the spectrogram was exposed simultaneously with knock is shown in figure 5. Knock is seen to occur in frames D-7 and D-8, and the light from the underwater spark appears in the same frames.

A number of typical spectrograms are shown (as positive prints) in figure 6, together with an approximate wavelength scale in angstrom units. (In all, 60 spectrograms were taken and the conclusions are based on all of them rather than on those in this figure). Mercury spectra overlap most of the spectrograms for more precise wavelength measurement. The spectrograms are arranged in chronological order relative to the occurrence of knock except the first spectrogram (fig. 6(a)).

The spectrogram of the source (fig. 6(a)), taken in the same way as the test spectrograms except that the engine was not operated, shows the continuous spectrum of the underwater spark; the absorption lines marked are due to the gold electrodes. The OH bands at 3064 angstrom units also appear very faintly in the original (they may not appear at all on the reproduction). The relative density of the OH bands on this spectrogram is 0.05; the relative density of the OH bands in any spectrogram of the source does not exceed 0.20 and averaged about 0.10. The sensitive lines of copper and silver sometimes appear, but always very faintly. Some bands or lines of unknown origin sometimes appear in the spectrograms of the source when the background intensity of the continuum is low; these lines do not appear in figure 6(a) but their position is marked "X". Because these lines were always weak and diffuse, the wavelength could not be satisfactorily determined.

The intensity of the continuum varied considerably from run to run. Part of this variation was due to lack of uniformity of the underwater spark but, in addition, the intensity consistently decreased as the burning progressed across the end zone; after knock the intensity increased again. These changes appear in figure 6 as a decrease in the whiteness of the continuum from figure 6(a) through figure 6(e), followed by an increase in whiteness in the later spectrograms. The decrease in intensity coincided approximately with the appearance of the dark mottled region in the end zone in the high-speed photographs and was in part due to the

schlieren effect in the spectrograph optical system. Continuous absorption by the combustion gases may also have been present.

The decrease in intensity referred to in the previous paragraph was more marked in the ultraviolet than in the visible end of the spectrum. This effect results in a shortening of the ultraviolet end of the spectrograms, which is evident in figure 6; none of the spectrograms exposed during combustion extend as far into the ultraviolet as the comparison spectrogram. Analysis of microphotometer records of all the spectrograms confirmed the fact that the decrease in density is greater in the ultraviolet (at wavelengths shorter than 3000-3200 A) for those spectrograms exposed during combustion. The variation in intensity may be due to continuous absorption in the ultraviolet by the combustion gases or to selective action of the schlieren effect.

The most prominent lines in the series of spectrograms are those of the hydroxyl radical (OH) absorption band at 3064 angstrom units. Before the flame reaches the region through which the spectrograms are taken (the end zone), the spectrograms are similar to those of the source (fig. 6(a)), and show no additional absorption. As the flame progresses through the end zone, the OH bands become stronger, as in figures 6(b) and 6(c); this relation is shown more clearly in figure 7. When the flame has swept through most of the end zone, the bands are very strong and the OH bands at 2811 angstrom units also appear as in figures 6(c) and 6(d). The increased intensity is maintained after knock as shown by figures 6(e) to 6(h). No data were taken sufficiently long after knock to determine when the intensity starts falling off.

A graph is presented in figure 7 showing the relative density of the OH bands as a function of the instant of exposure of the spectrogram relative to knock. The points marked with arrows represent spectrograms in which the background intensity was low and the relative density is probably too low to be truly representative of the absorption by the burning gases for reasons previously given. The relative density of the OH bands has a low value (probably zero, if the absorption in the light source is taken into account) before combustion, and increases as the flame sweeps across the end zone. An apparent increase appears in the density immediately after knock (within 5 frames) but close examination shows this increase to be only apparent because all the points less than 10 frames before knock are labeled with arrows; because no correlation exists between the plotted value of such a point and the absorption by the burning gases (except that the plotted value is always too low) the selective absorption may be as great before knock as after. It may be concluded therefore that there was considerable OH absorption before and after knock.

The spectrograms taken after knock (figs. 6(e) to 6(h)) have many lines in common that do not appear in the spectrograms taken before knock such as the lines marked Cu and Ag in figure 6(e) and Fe, Na, and Mn, in figure 6(f). A number of lines have been identified as Fe lines, but are unmarked on the figure. The lines that have been identified in some of the spectrograms taken after knock are listed in table I.

A spectrogram and a microphotometer record showing all the lines and bands that have been identified are shown in figure 8; this spectrogram was exposed 51 frames after knock. The microphotometer trace was reduced to the same scale as the spectrogram to facilitate comparison. Many lines not visible in the reproduction of the spectrogram are clearly visible in the microphotometer record and were visible in the original negative of the spectrogram.

A characteristic feature of the metal lines is the suddenness with which they appear after knock. Spectrograms of figures 6(d) and 6(e) correspond to the motion pictures of figures 5 and 4, respectively, and were taken very close to the time of knock. In figure 6(d) (fig. 5), which was taken simultaneously with knock, however, none of the metal lines appear, whereas in figure 6(e) (fig. 4), which was taken within two frames or about 50 microseconds after knock, the copper and silver lines appear very prominently and the iron lines faintly. In one spectrogram (not included in the figure because it was taken under slightly different conditions), the copper and silver lines appear within one frame of knock, though with less intensity than in the later spectrograms. The metal lines appear in all the spectrograms taken after the occurrence of knock, but never before knock except that the copper and silver lines sometimes appear in spectrograms taken before knock with very low relative density, comparable to that with which the same lines appear in some spectrograms of the source. The copper and silver absorption, in all cases before knock, probably took place in the light source rather than in the combustion chamber.

DISCUSSION

The molecular bands that might be expected to appear in the combustion gas spectrum are the HC bands, the Swan (C_2) bands, the hydroxyl (OH) bands, and the hydrocarbon (or ethylene) flame bands. Of these, the OH bands are the only ones that appear in the spectrograms obtained in this investigation. The Swan bands are near the limit of sensitivity of the plates used and would not record unless very strong; the HC bands have been observed in emission but never in absorption (reference 12); and

the hydrocarbon flame bands have been observed in Bunsen flames but not in engine combustion spectra.

In addition to the bands associated directly with hydrocarbon combustion, the spectrograms were carefully checked for the following bands; NO (3009, 2860 A), HCHO (2839, 2931, 3033, 3135 A), CO (third positive bands, 2833, 2977, 3134, 3305 A); CN (3883, 3871, 3862 A).

No spectrograms exposed before the arrival of the flame front in the end zone showed any characteristic absorption. Although Rassweiler and Withrow (reference 2) reported the occurrence of formaldehyde bands near 3200 angstrom units in the spectrum of the unburned charge before knock, these bands were not observed in the spectrograms taken in the present investigation. The absence of these bands may have been due to the fact that the type of knock observed was different from that observed by Rassweiler and Withrow. The high-speed motion pictures of this report showed no evidence of the preknock reactions regarded as early stages of autoignition in reference 6.

The appearance of the OH bands appears to be associated with the progress of the flame front through the end zone. The bands first appear when the flame front starts across the end zone and grow in intensity as the flame crosses the end zone; the bands apparently persist with approximately the same intensity after knock. This result is not what might be expected on the basis of Rassweiler and Withrow's observation (reference 1) that the OH emission is less intense in the detonating zone as compared with the rest of the combustion chamber when knock occurs; the difference may therefore indicate that the two methods did not involve comparable conditions.

The high-speed photographs of this and other reports show knock as an extremely rapid transformation in the appearance of the combustion gases. This change has been interpreted as being caused by a wave, similar to a detonation wave, traversing the combustion chamber. The data obtained in the course of this investigation do not show positive evidence of any chemical change that affects the absorption spectrum in the region from about 2600 to 4000 angstrom units. The appearance of the metal lines may throw some light on the physical characteristics of knock. The occurrence in the emission spectra of explosion flames of lines characteristic of the metals of the wall of the explosion vessel has been reported in several instances (references 12 to 14). As reported in these sources, the metallic lines occur in the spectra of violent explosions rather than in those of weak explosions or steady combustion.

CONCLUSIONS

The results of the preliminary spectrographic investigation of absorption lines in the near ultraviolet correlated with high-speed photographs have been negative as to the demonstration of any chemical change occurring at the instant of knock and also negative as to the demonstration of the presence of any molecular species in the burning charge before knock that might contribute to the cause of knock. The practicability of the technique has been demonstrated, however, and the negative results are of value because they indicate the virtual absence of numerous molecular species the presence of which might otherwise be postulated.

In view of the demonstrated feasibility of the method, continued work might prove fruitful. Such continued work could include investigation of spectral regions other than the one dealt with in the present report, and might include reinvestigation of the near ultraviolet with an attempt to increase the degree of dispersion. Investigations might be made with other fuel types and with different engine operating conditions. In further work, spectrograms of normal nonknocking combustion should be taken for comparison with the knock spectra.

Flight Propulsion Research Laboratory,
National Advisory Committee for Aeronautics,
Cleveland, Ohio, May 16, 1947.

REFERENCES

1. Rassweiler, Gerald M., and Withrow, Lloyd: Emission Spectra of Engine Flames. Ind. and Eng. Chem., vol. 24, no. 5, May 1932, pp. 528-538.

2. Rassweiler, Gerald M., and Withrow, Lloyd: Spectrographic Detection of Formaldehyde in an Engine Prior to Knock. Ind. and Eng. Chem., vol. 25, no. 12, Dec. 1933, pp. 1359-1366.

3. Hanson, T. K., and Egerton, A. C.: Nitrogen Oxides in Internal Combustion Engine Gases. Proc. Roy. Soc. (London), ser. A, vol. 163, no. A912, Nov. 5, 1937, pp. 90-100.

4. Miller, Cearcy D., and Olsen, H. Lowell: Identification of Knock in NACA High-Speed Photographs of Combustion in a Spark-Ingition Engine. NACA Rep. No. 761, 1943.

5. Rothrock, A. M., Spencer, R. C., and Miller, Cearcy D.: A High-Speed Motion-Picture Study of Normal Combustion, Knock, and Preignition in a Spark-Ignition Engine. NACA Rep. No. 704, 1941.

6. Miller, Cearcy D.: Relation Between Spark-Ignition Engine Knock, Detonation Waves, and Autoignition as Shown by High-Speed Photography. NACA ARR No. E6C22, 1946.

7. Miller, Cearcy D., Olsen, H. Lowell, Logan, Walter O., Jr., and Osterstrom, Gordon E.: Analysis of Spark-Ignition Engine Knock as Seen in Photographs Taken at 200,000 Frames a Second. NACA ARR No. E6D23, 1946.

8. Rothrock, A. M.: The NACA Apparatus for Studying the Formation and Combustion of Fuel Sprays. NACA Rep. No. 429, 1932.

9. Rothrock, A. M., and Waldron, C. D.: Some Effects of Injection Advance Angle, Engine-Jacket Temperature, and Speed on Combustion in a Compression-Ignition Engine. NACA Rep. No. 525, 1935.

10. McNicholas, H. J.: Use of the Under-Water Spark with the Hilger Sector Photometer in Ultra-Violet Spectrophotometry. Res. Paper 33, Bur. Standards Jour. Res., vol. 1, no. 6, Dec. 1928, pp. 939-949.

11. Miller, Cearcy D.: The NACA High-Speed Motion-Picture Camera. Optical Compensation at 40,000 Photographs a Second. NACA ACR No. E6C25, 1946.

12. Gaydon, A. G.: Spectroscopy and Combustion Theory. Chapman & Hall, Ltd. (London), 1942.

13. Bell, J.: Spectrographic Studies of the Explosive Combustion of Methane. Proc. Roy. Soc. (London), ser. A, vol. 158, no. A894, Jan. 15, 1937, pp. 429-454.

14. Smith, E. C. W.: The Emission Spectrum of Hydrocarbon Flames. Proc. Roy. Soc. (London), ser. A, vol. 174, no. A956, Jan. 12, 1940, pp. 110-125.

TABLE I - ABSORPTION LINES IDENTIFIED IN SPECTROGRAMS TAKEN AFTER KNOCK

[Wavelength in angstrom units]

Iron (a)	Copper (b)	Silver (b)	Gold	Other (c)
2720	[d]3248p	3280	[d]2676p	3303 Na
2737	[d]3274p	3383	2748	2796 Mg or Mn
2744			3122	2798 Mn
2756				2802 Mg or Mn
2772				2852 Mg
2788				3493 Mn
2937				
2948				
2954				
2967				
2973				
2984				
2994				
3001				
3008				
3021				
3025				
3038				
3048				
3054				
3441				
3466				
3475				
[d]3581p				
[d]3720p				
[d]3737p				
[d]3746p				
3749				
[d]3860p				

[a]Strongest lines of iron arc. At least some appeared in most of spectrograms taken after knock. Other iron lines appeared but are not listed.

[b]Appeared with great intensity on every spectrogram taken after knock.

[c]Appeared on many of the spectrograms taken after knock. The identification is somewhat uncertain because not enough other lines are available as checks.

[d]Persistent lines of element.

NATIONAL ADVISORY
COMMITTEE FOR AERONAUTICS

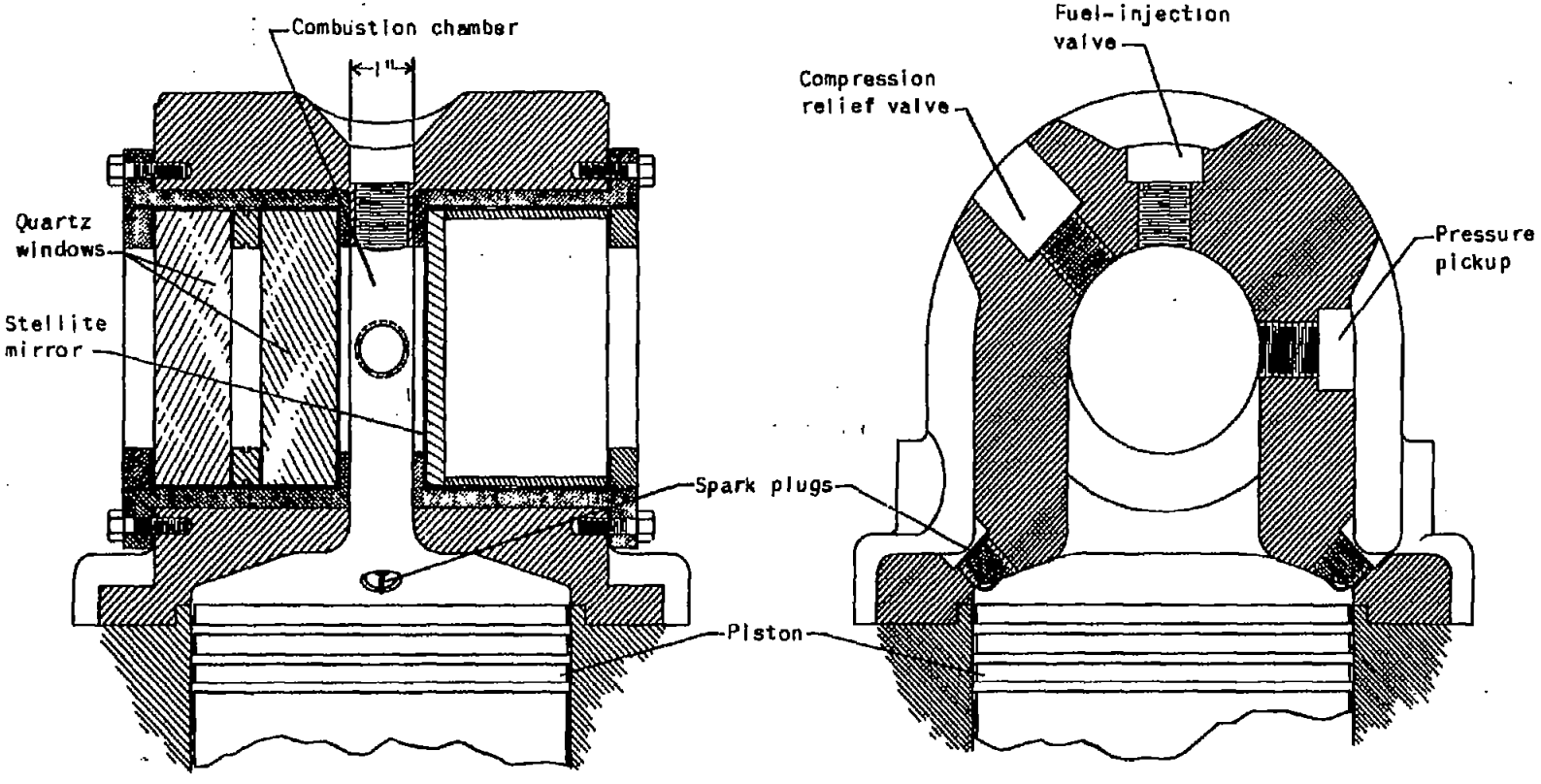

Figure 1. - Front and side sectional views of combustion chamber of NACA (spark-ignition) combustion apparatus.

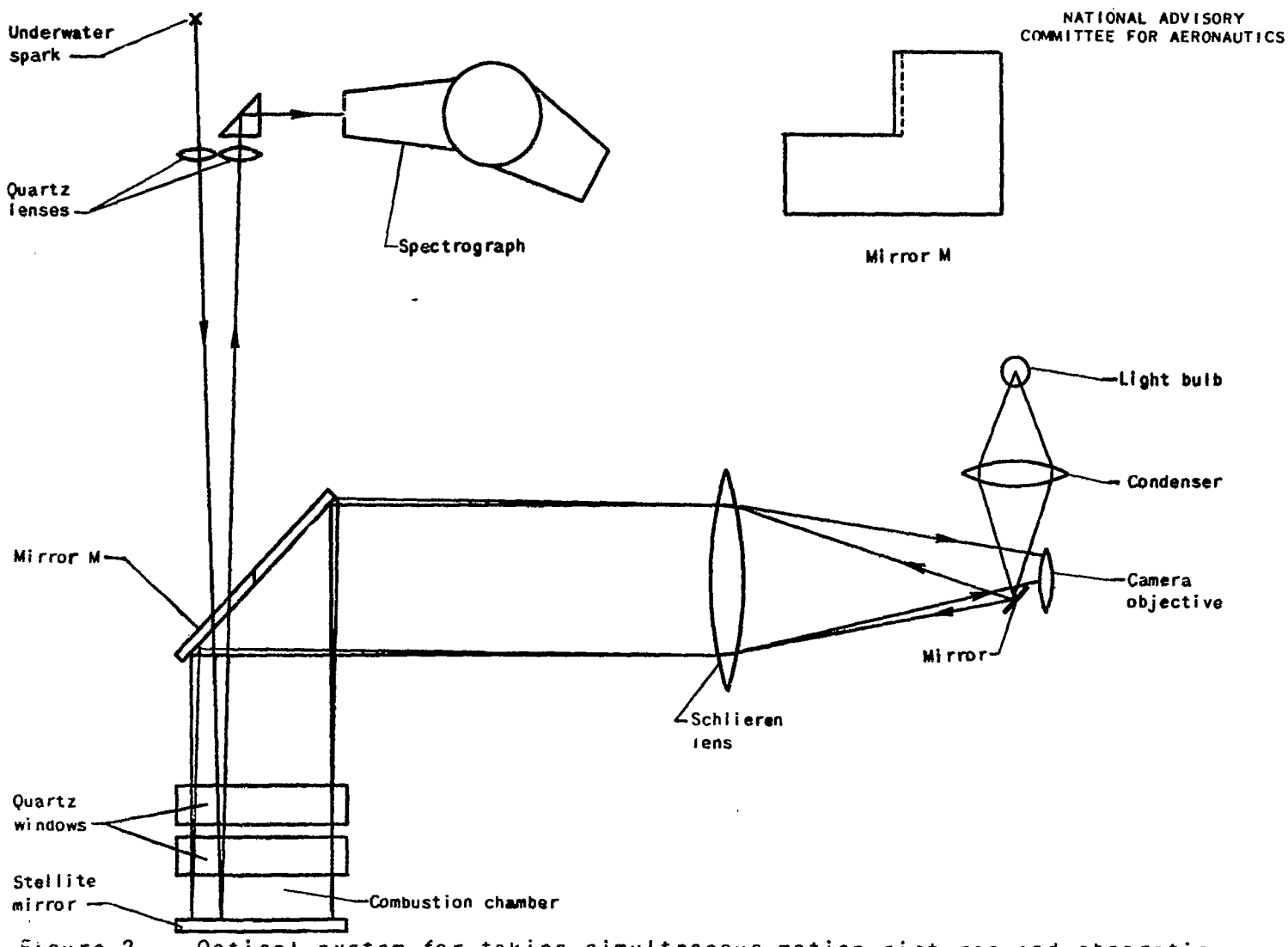

Figure 2. - Optical system for taking simultaneous motion pictures and absorption spectra.

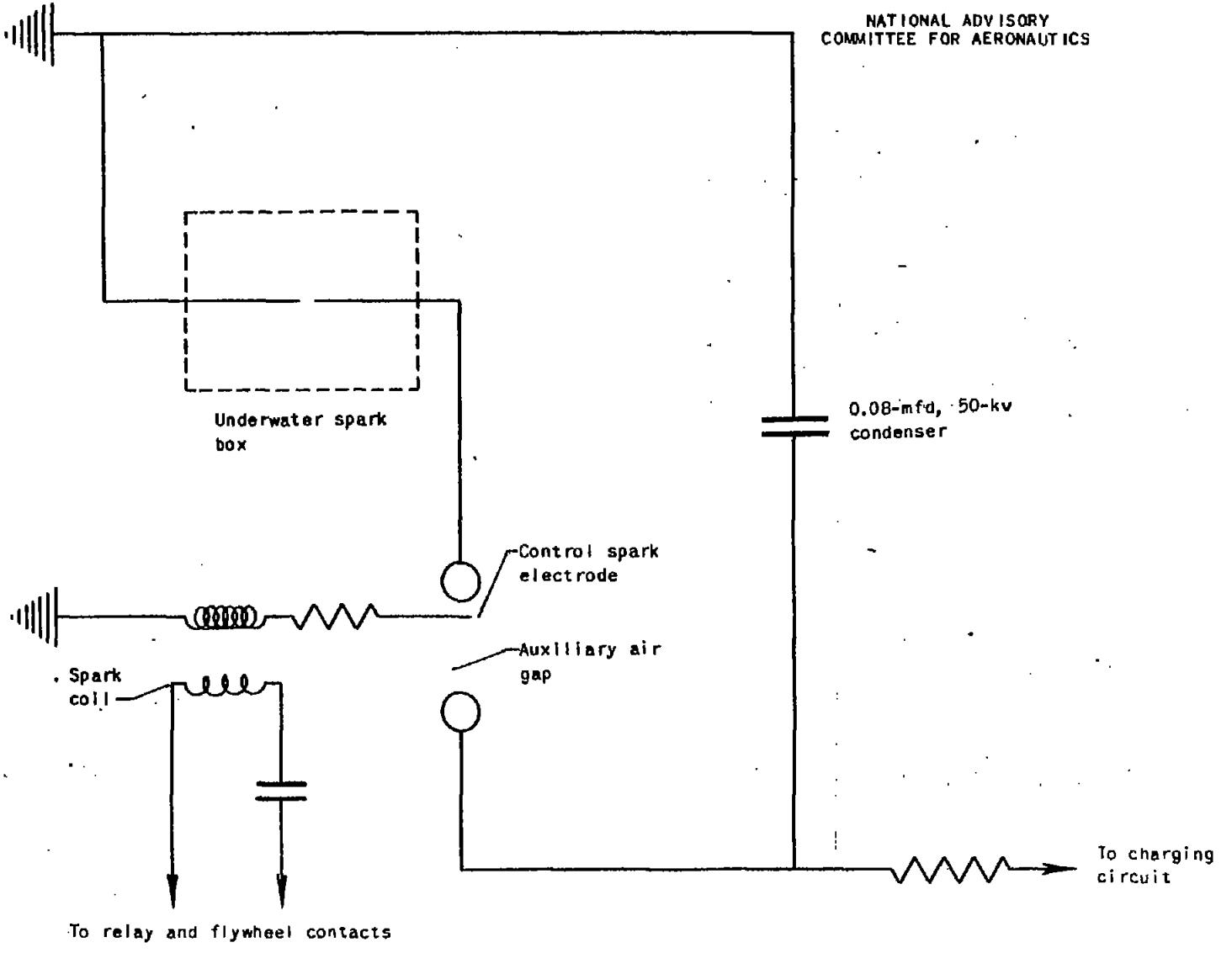

Figure 3. - Diagram of electrical circuit for underwater spark.

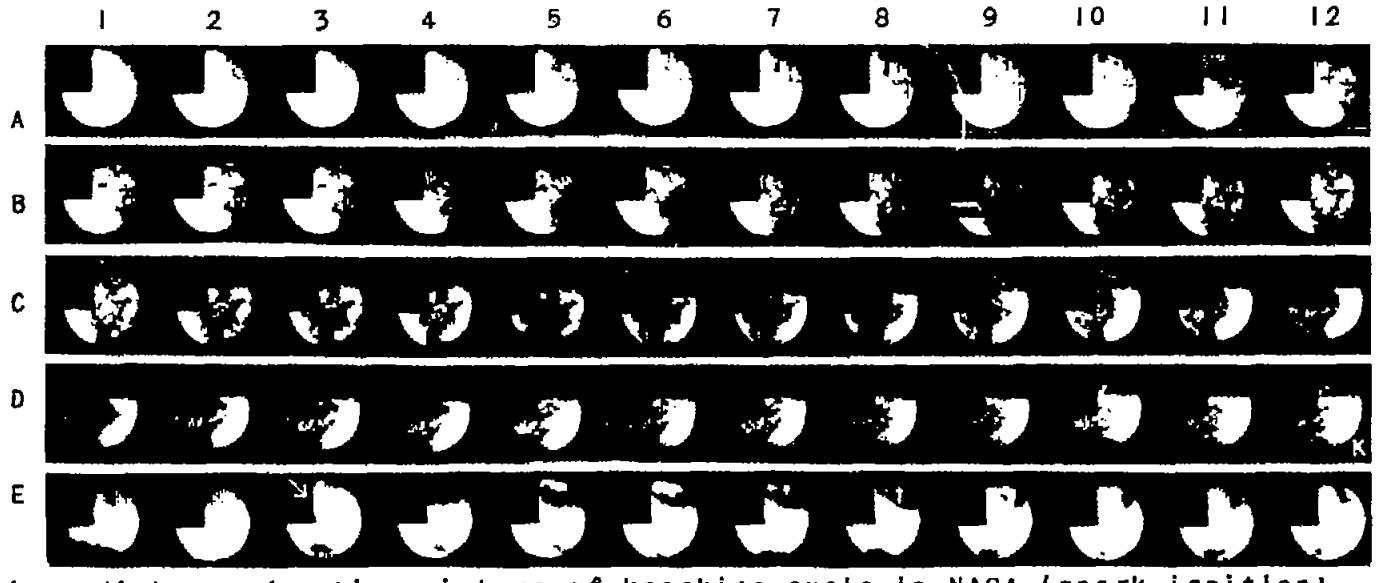

Figure 4. - High-speed motion picture of knocking cycle in NACA (spark-ignition) combustion apparatus. Knock occurs 2 frames before spectrogram. Arrow, record of exposure of spectrogram; K, occurrence of knock.

NACA
C-14626
4-2-46

Figure 5. - High-speed motion picture of knocking cycle in NACA (spark-ignition) combustion apparatus. Knock occurs simultaneously with spectrogram. Arrow, record of exposure of spectrogram; K, occurrence of knock.

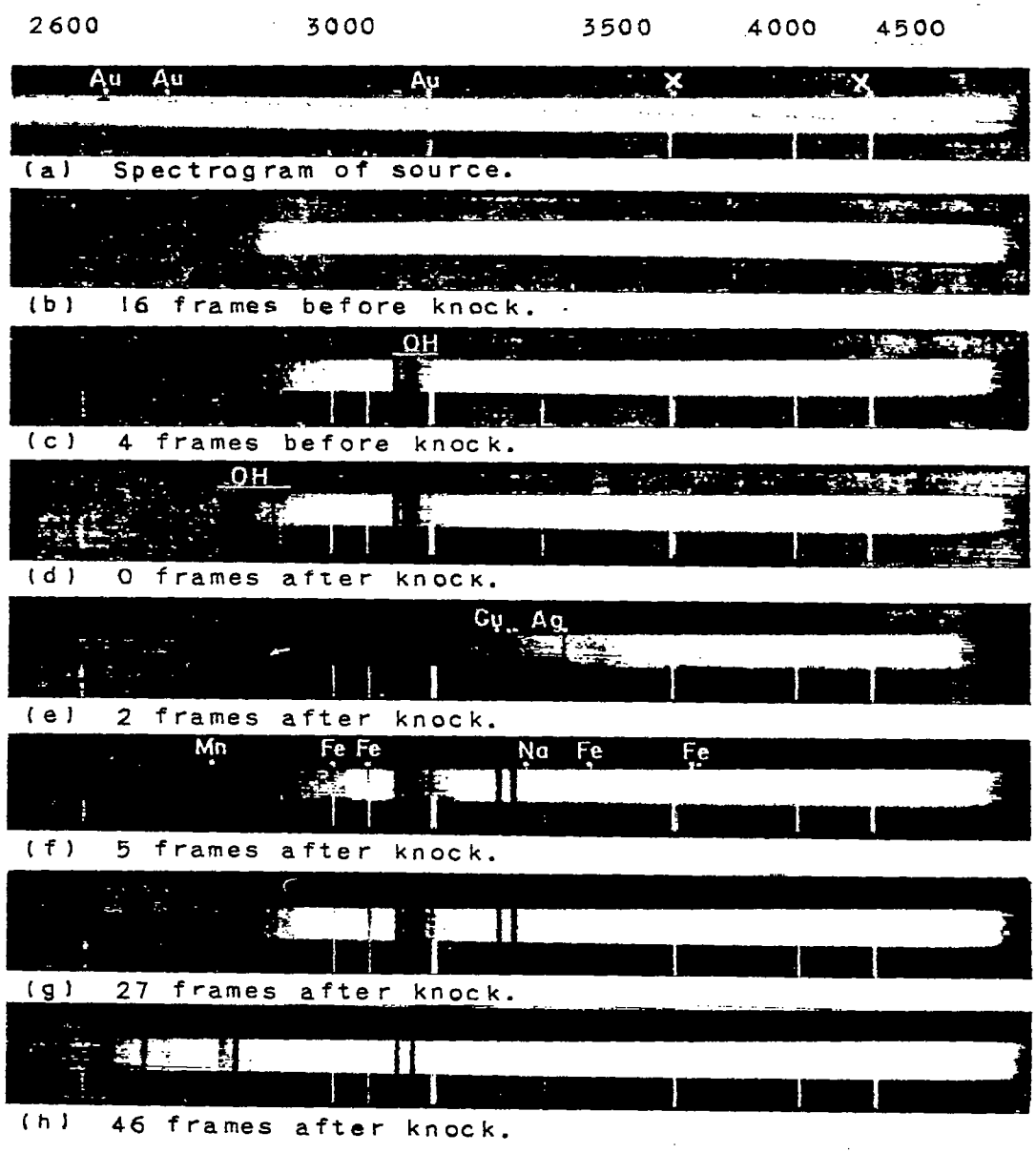

Figure 6. - Absorption spectrograms of combustion gases during knocking cycle in NACA (spark-ignition) combustion apparatus. 1 frame, 25 microseconds; absorption path length, 2 inches.

NACA
C-14625
4-2-46

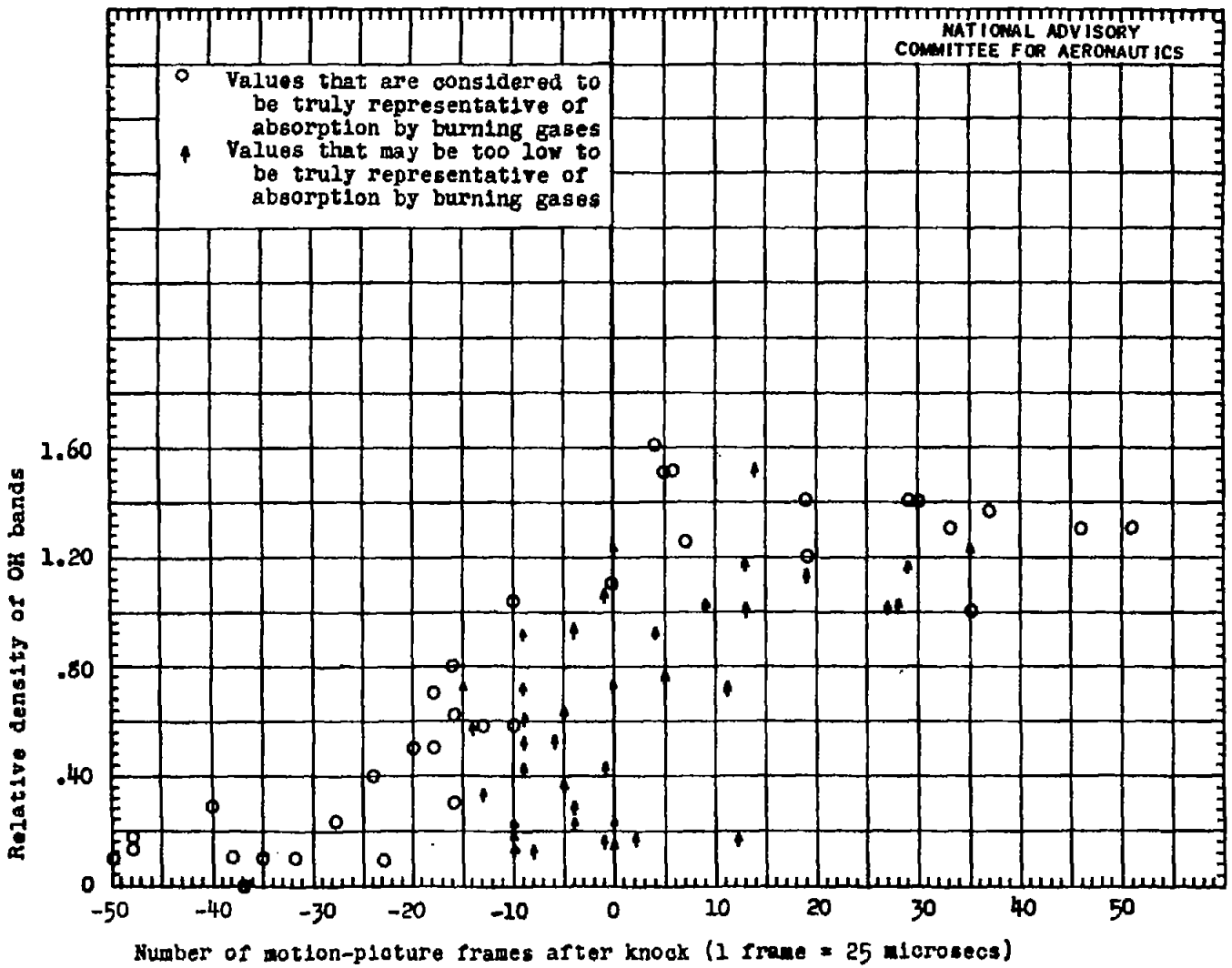

Figure 7. - Relative density of OH bands (3064 A) in spectrograms of knocking combustion as function of time of exposure of spectrograms relative to knock.

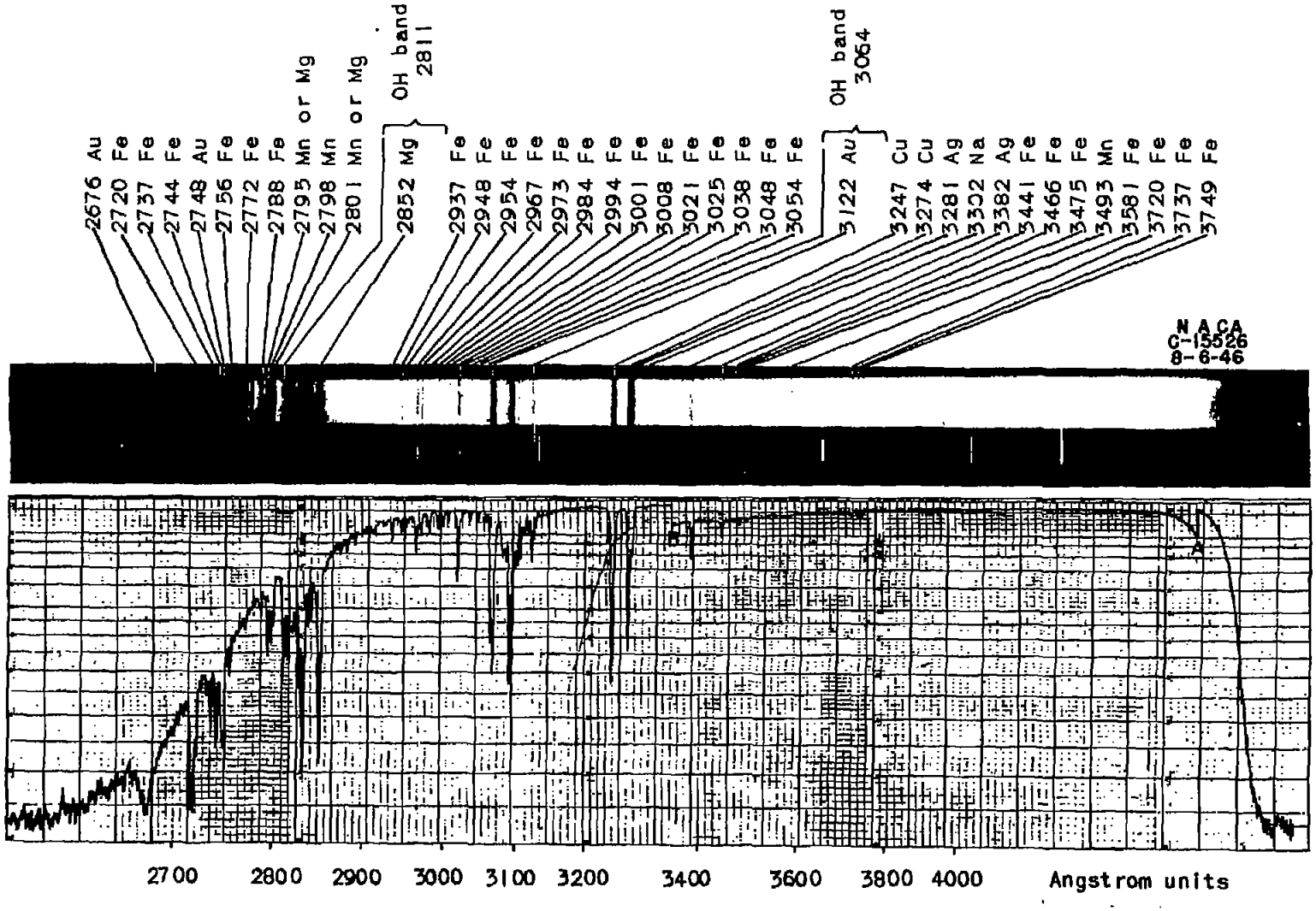

Figure 8. - Spectrogram and microphotometer record of identified lines and bands. Exposed 51 frames after knock; exposure path length, 2 inches. A and B show where the recording sensitivity was changed.