10461
NACA TN 4126

TECH LIBRARY KAFB, NM
0066878

NATIONAL ADVISORY COMMITTEE FOR AERONAUTICS

TECHNICAL NOTE 4126

EXPERIMENTAL INVESTIGATION OF THE EFFECTS OF SOME SHROUD DESIGN VARIABLES ON THE STATIC THRUST CHARACTERISTICS OF A SMALL-SCALE SHROUDED PROPELLER SUBMERGED IN A WING

By Robert T. Taylor

Langley Aeronautical Laboratory
Langley Field, Va.

Washington
January 1958

AFMDC
TECHNICAL LIBRARY
AFL 2811

TECH LIBRARY KAFB, NM
0066878

NATIONAL ADVISORY COMMITTEE FOR AERONAUTIC

TECHNICAL NOTE 4126

EXPERIMENTAL INVESTIGATION OF THE EFFECTS OF SOME SHROUD DESIGN VARIABLES ON THE STATIC THRUST CHARACTERISTICS OF A SMALL-SCALE SHROUDED PROPELLER SUBMERGED IN A WING

By Robert T. Taylor

SUMMARY

An experimental investigation has been made to determine the effects of shroud-lip radius of curvature, shroud length, and shroud diffuser angle on the static thrust characteristics of a small-scale shrouded propeller which simulated a propeller submerged in the wing of an airplane. Also included are the effects of distance from the exit of the shroud to the ground on the thrust available for take-off.

The data indicate that when a shroud-lip radius of curvature below 6 percent of the propeller diameter is used, marked reductions in static thrust efficiency result. Relatively minor losses in static thrust efficiency occur as a result of decreasing the shroud length. Increases in exit area result in some minor losses in static thrust efficiency but still allow substantial increases in static thrust. Close proximity of the ground to the shroud exit can result in very large losses in thrust.

INTRODUCTION

Reduced propeller tip losses and the ability to control the slipstream diameter make the shrouded propeller attractive for the production of high static thrust for vertical ascent. Several plans for adapting shrouded propellers to use in vertical-take-off aircraft have been proposed. One plan (ref. 1) involves an installation where a propeller is located in a wing with its shaft axis perpendicular to the wing-chord plane. Thus shrouded, the propeller would be used to power the aircraft in vertical take-off and landing and, as the aircraft gained sufficient forward speed, its weight would be transferred from the propeller to the wing. This application implies a minimum shroud length for a given

propeller diameter. Certain questions thus arise as to proper design of a relatively short shroud. The minimum lip radius of curvature, the minimum shroud length ahead of the propeller plane, the minimum shroud length behind the propeller plane, and the diffuser angle permissible in the exit have a pronounced bearing on shroud length.

The Langley Aeronautical Laboratory, therefore, has undertaken a systematic investigation to provide basic information on shroud configuration at zero forward speed for a specific shrouded propeller application. Presented herein are the results of an experimental investigation at zero forward speed to determine the effects of shroud-lip radius, shroud length ahead of the propeller, shroud length behind the propeller, and diffuser angle behind the propeller plane on the static thrust characteristics of a small-scale shrouded propeller.

SYMBOLS

A	area of cross section, sq ft
D	propeller diameter, in.
R	shroud-lip radius of curvature, in.
r	propeller radius at any station, in.
r_t	propeller radius at tip, in.
b	propeller blade chord, in.
t	propeller blade thickness, in.
l	length of shroud behind propeller plane, in.
h	distance from shroud exhaust to ground board, in.
P	propeller shaft power, $\frac{2\pi Qn}{550}$, hp
T_u	unshrouded propeller thrust, lb
T_p	thrust of propeller in presence of shroud, lb
T_s	thrust carried on shroud with propeller operating, lb
T	total thrust of shrouded configuration, $T_s + T_p$, lb

Q propeller shaft torque, ft-lb

n propeller rotational speed, rps

β propeller blade angle, deg

$\beta_{.75}$ propeller blade angle at $\frac{r}{r_t} = 0.75$, deg

θ shroud-diffuser included angle, deg

η_u unshrouded propeller static thrust efficiency (or figure of merit), $\frac{T_u^{3/2}}{1100P\sqrt{\rho \frac{A_D}{2}}}$

η_s shrouded propeller static thrust efficiency, $\frac{T^{3/2}}{1100P\sqrt{\rho A_E}}$

ρ air density, slugs/cu ft

Subscripts:

E station at shroud exit

D station at propeller plane

∞ infinite distance from ground

APPARATUS AND TESTS

The test configuration used in this investigation consisted of a propeller, a shroud, and a platform simulating the upper surface of a wing. Photographs of the configuration are presented as figure 1. Figure 2(a) is a sketch of the component parts of the test configuration and the balance mounting arrangement.

The shroud consisted of laminated mahogany units which could be assembled to test various combinations of lip radius, shroud length, and diffuser angle (fig. 2(b)). The range of the variables investigated is as follows:

Shroud-lip radius, R	0 to 0.125D
Shroud length ahead of propeller	0 and 0.25D
Shroud length behind propeller, l	0.03D to 1.03D
Diffuser included angle, deg	0, 7, and 14

The propeller consisted of three adjustable-pitch blades of Clark Y section. The blade-form curves of the propeller are shown in figure 3. The clearance between the propeller blade tips and shroud was held at a constant 1/16 inch (0.0039D) throughout the tests. Reference 2 indicates a small loss in thrust at this value of tip clearance, but from the practical aspects of the model setup it was deemed important to have sufficient tip clearance for the tests and the 1/16-inch clearance was arrived at on the basis of the flexibility of the mount between the propeller shaft and the shroud.

The dynamometer used to power the propeller was identical to that described in reference 3. The dynamometer measured the thrust and torque of the propeller shaft. The propeller rotational speed was determined by observing a stroboscopic type of indicator, to which was fed the output frequency of a small alternator connected to the rotor shaft.

The entire shroud-propeller combination and the simulated wing surface were mounted on a strain-gage balance which measured the static thrust of the configuration. The measurements taken allowed the computation of propeller thrust in the presence of the shroud, propeller shaft power, and thrust of the propeller-shroud combination. From these quantities it was possible to compute the static thrust efficiency (figure of merit) η, the ratio of propeller thrust to total-configuration thrust T_p/T, and the ratio of shrouded propeller thrust to unshrouded propeller thrust T/T_u through a range of propeller blade angles for the configurations tested.

RESULTS AND DISCUSSION

Effect of Propeller Blade Angle

Curves of the static thrust efficiency plotted against propeller blade angle for the unshrouded propeller (that is, the propeller alone) and for the shrouded propeller with several values of shroud-lip radius ratio R/D are presented in figure 4. The values of static thrust efficiency η presented were obtained by averaging the efficiency over a range of rotational speeds (power loadings). The shroud in this comparison extends 1.03 diameters behind the plane of the propeller and

has an exit area ratio $\frac{A_E}{A_D} = 1.00$. The maximum static thrust efficiency for the shrouded propeller is approximately 10 percent higher than that of the unshrouded propeller and occurs at a higher blade angle. The increase in blade angle for maximum efficiency is due to the higher velocity induced at the propeller plane with the shroud in place. Thus, if the blade sections are to operate at maximum lift-drag ratio, an increase in the blade angle of the shrouded propeller becomes necessary.

The data in figure 4 show the maximum static thrust efficiency for the shrouded propeller to be relatively low. A possible explanation lies in the fact that the propeller used for these tests was not designed to take advantage of the inflow velocity distribution of the shroud. Also, the unit was operated without counter vanes which, if used, might be expected to reduce the losses due to slipstream rotation. It is believed, however, that the incremental changes in efficiency that occur as a result of the various configurations do not depend to any great degree on the maximum efficiency of the shroud-propeller combination.

Effect of Lip Radius

Figure 5 is a cross plot of the data from figure 4 at several propeller blade angles and shows the dependence of static thrust efficiency on the radius of the shroud lip. Relatively severe losses in attainable efficiency are associated with values of lip radii below about 0.06D. Examination of the entrance flow by inserting in it a wand with tufts attached while the propeller was operating showed that the flow entering the shroud had separated from the lip surface when lip radii below about 0.06D were used. It is emphasized that these results apply only to data obtained under static conditions. Inasmuch as this type of configuration will acquire forward speed in flight, the velocity across the entrance perpendicular to the propeller axis may require that a vastly different form of lip be used.

Figure 6 shows the effect of changes in shroud-lip radius on the ratio of propeller thrust to total thrust T_p/T. These points were taken at values of blade angle for maximum static thrust efficiency. With the largest lip radius, the thrust load is equally divided between the propeller and the shroud, as would be expected for a straight shroud ($\theta = 0^{\circ}$). As the lip radius is reduced, however, the load carried by the shroud is also reduced because of the previously mentioned separation. It is interesting to note, however, that even with a sharp-edged entrance ($R/D = 0$) the shroud still carries about 30 percent of the total thrust.

Effect of Propeller Location in Shroud

A comparison of curves of static thrust efficiency plotted against propeller blade angle for two propeller-plane positions at two values of lip radius ratio is shown in figure 7. The data at $R/D = 0.0625$ showed essentially no change in static thrust efficiency when the propeller was moved 0.25 diameter into the duct, whereas at $R/D = 0.0156$ the one point taken showed a decrease in efficiency of about 6 percent. Readings taken with the smaller lip radii were very unsteady, and considerable scatter was present in the data. In general, the advantage of locating the propeller 0.25D inside the shroud is negligible.

Effect of Shroud Length Behind the Propeller Plane

The effect of varying shroud length behind the propeller plane on the static thrust efficiency is illustrated in figure 8. These data were taken with lip radii that gave the highest efficiency. At the power loadings used (about 0.3 to 3.8 horsepower per sq ft of propeller disk area), the losses in static thrust efficiency associated with decreases in shroud length from 1.03 to 0.03 propeller diameters appear to be relatively small. No evidence of any appreciable loss due to friction on the internal surface of the shroud at the power loadings investigated is apparent. A loss of this type would show up as an increase in efficiency with a decrease in shroud length. The losses shown for short shrouds seem to be due to a shroud length insufficient to allow the pressure rise of the propeller to develop as axial dynamic pressure. This type of loss may be more severe at power loadings higher than those used in this investigation.

Effect of Diffuser Angle

A diffuser to increase the exit area of a shrouded propeller is frequently proposed as a means of increasing the static thrust capacity of the unit. Diffusers with included angles of 7° and 14° were tested with a lip radius of 0.1250 propeller diameter, and the results are presented in figures 9 to 11. Figure 9 shows the effect on static thrust efficiency of changes in exit area ratio A_E/A_D for included angles of 7° and 14° in the diffuser. The static thrust efficiency gradually decreases with an increase in exit area but seems to be independent of diffuser angle. A 7-percent loss in static thrust efficiency is associated with a 50-percent increase in exit area. It should be noted that, if the figure of merit for the unshrouded propeller η_u had been used, the values of efficiency in figure 9 would have increased with increasing exit area. The efficiency η_s, therefore, is deemed more appropriate, as it represents the ratio of the actual slipstream energy to the input power.

Although the efficiency is reduced somewhat, the use of diffusion in the exit, nevertheless, results in a substantial increase in total thrust, as is shown in figure 10. In the range of shroud lengths and diffuser angles used in these tests, there appears to be little choice in arriving at a given exit area with a long or with a short shroud. Increasing area ratio between the propeller disk and the shroud exit appears to govern the increase in static thrust and the decrease in static thrust efficiency. Figure 10 also shows that the variation of the ratio of the shrouded propeller thrust to the unshrouded propeller thrust T/T_u for constant power is greater experimentally than is indicated by simple momentum theory (ref. 4) by some 15 to 20 percent. The increment shown between experiment and simple momentum theory is probably associated with the decreased tip losses of the propeller when in the presence of the shroud.

The ratio of thrust carried by the propeller to the total shrouded propeller thrust T_p/T as a function of exit area ratio is presented in figure 11. This curve is in excellent agreement with the curve obtained by simple momentum theory, which indicates that an increasing percentage of the total thrust is carried by the shroud as the exit area is increased.

Effect of Ground Proximity

The proximity of the ground to the exit of a shrouded propeller submerged in a wing (or platform) could be expected to exert a pronounced effect on the available thrust of the machine. A configuration (shown in fig. 12) representing a relatively short shroud was selected and ground proximity tests were made. In this case both the upper and lower surfaces of the wing were simulated. The results of these tests are shown in figure 13. The ratio of thrust in ground effect to thrust out of ground effect T/T_∞ is presented as a function of propeller diameters above the ground. At a distance from the ground of about 0.25 diameter the thrust ratio is about -1.0 or a download equal to the lift out of ground effect. The figure illustrates clearly that for the type of installation tested, care should be taken to provide sufficient ground clearance for take-off and landing.

CONCLUSIONS

Tests to determine the effect on the static thrust characteristics of several shroud-design variables on a small-scale shrouded propeller representing a propeller submerged in a wing indicate the following conclusions:

1. Relatively severe losses in attainable static thrust efficiency were associated with shroud-entrance-lip radii smaller than 6 percent of the propeller diameter.

2. Relatively minor losses in static thrust efficiency were associated with decreases in shroud length from 1.03 to 0.03 propeller diameters.

3. Within the range of the tests increases in exit area allowed substantial increases in static thrust but decreased the static thrust efficiency.

4. The proximity of the shroud exit to the ground had a pronounced adverse effect on the static thrust of a shrouded propeller submerged in a wing.

Langley Aeronautical Laboratory,
National Advisory Committee for Aeronautics,
Langley Field, Va., July 31, 1957.

REFERENCES

1. Hickey, David H.: Preliminary Investigation of the Characteristics of a Two-Dimensional Wing and Propeller With the Propeller Plane of Rotation in the Wing-Chord Plane. NACA RM A57F03, 1957.

2. Hubbard, Harvey H.: Sound Measurements for Five Shrouded Propellers at Static Conditions. NACA TN 2024, 1950.

3. Kuhn, Richard E., and Draper, John W.: Investigation of the Aerodynamic Characteristics of a Model Wing-Propeller Combination and of the Wing and Propeller Separately at Angles of Attack Up to 90°. NACA Rep. 1263, 1956. (Supersedes NACA TN 3304 by Draper and Kuhn.)

4. Platt, Robert J., Jr.: Static Tests of a Shrouded and an Unshrouded Propeller. NACA RM L7H25, 1948.

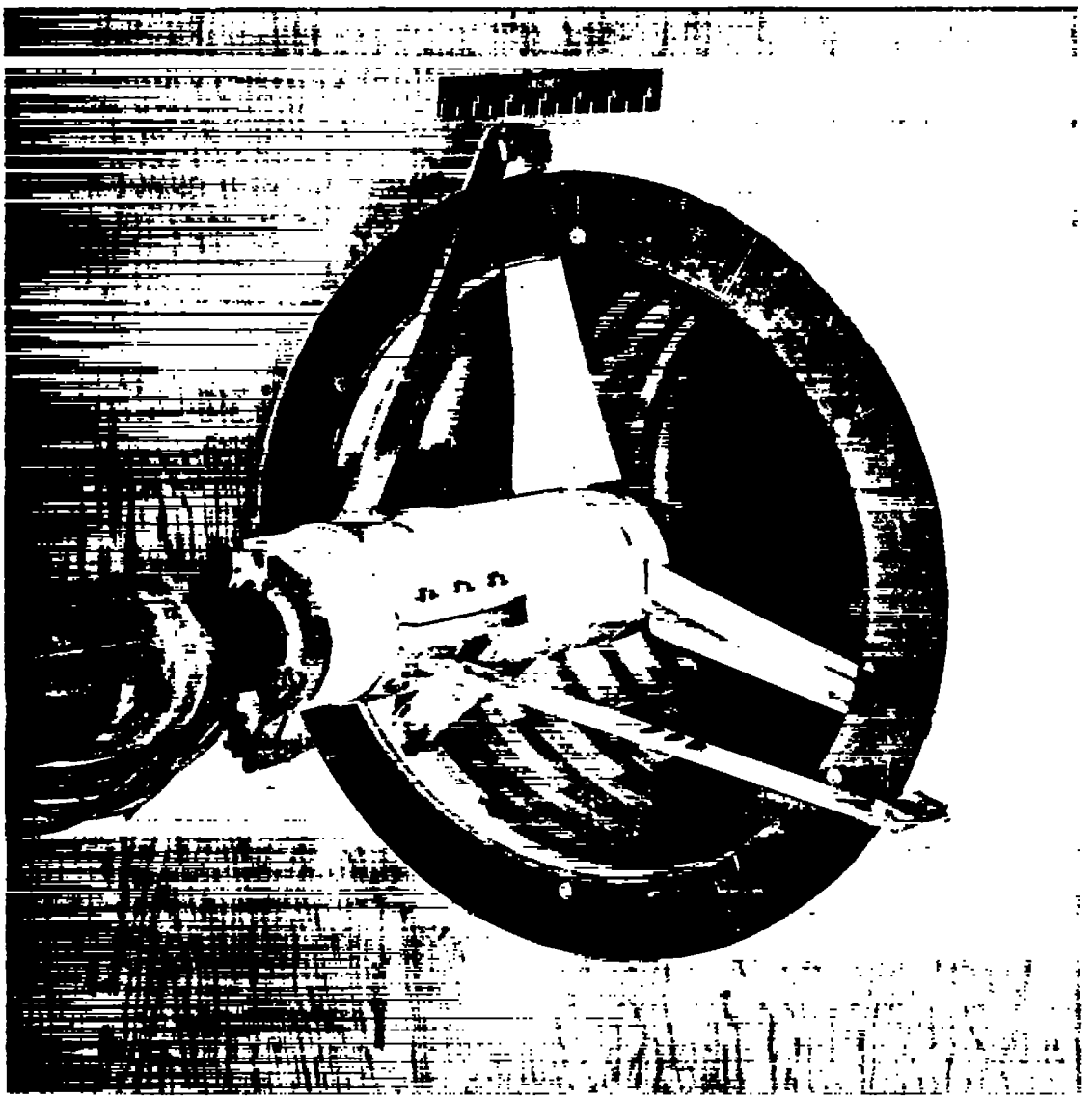

(a) Three-quarter front view. L-96069

Figure 1.- Photograph of shrouded-propeller configuration mounted for testing in simulated upper surface of wing. $\frac{R}{D} = 0.0156$; $\frac{l}{D} = 1.03$.

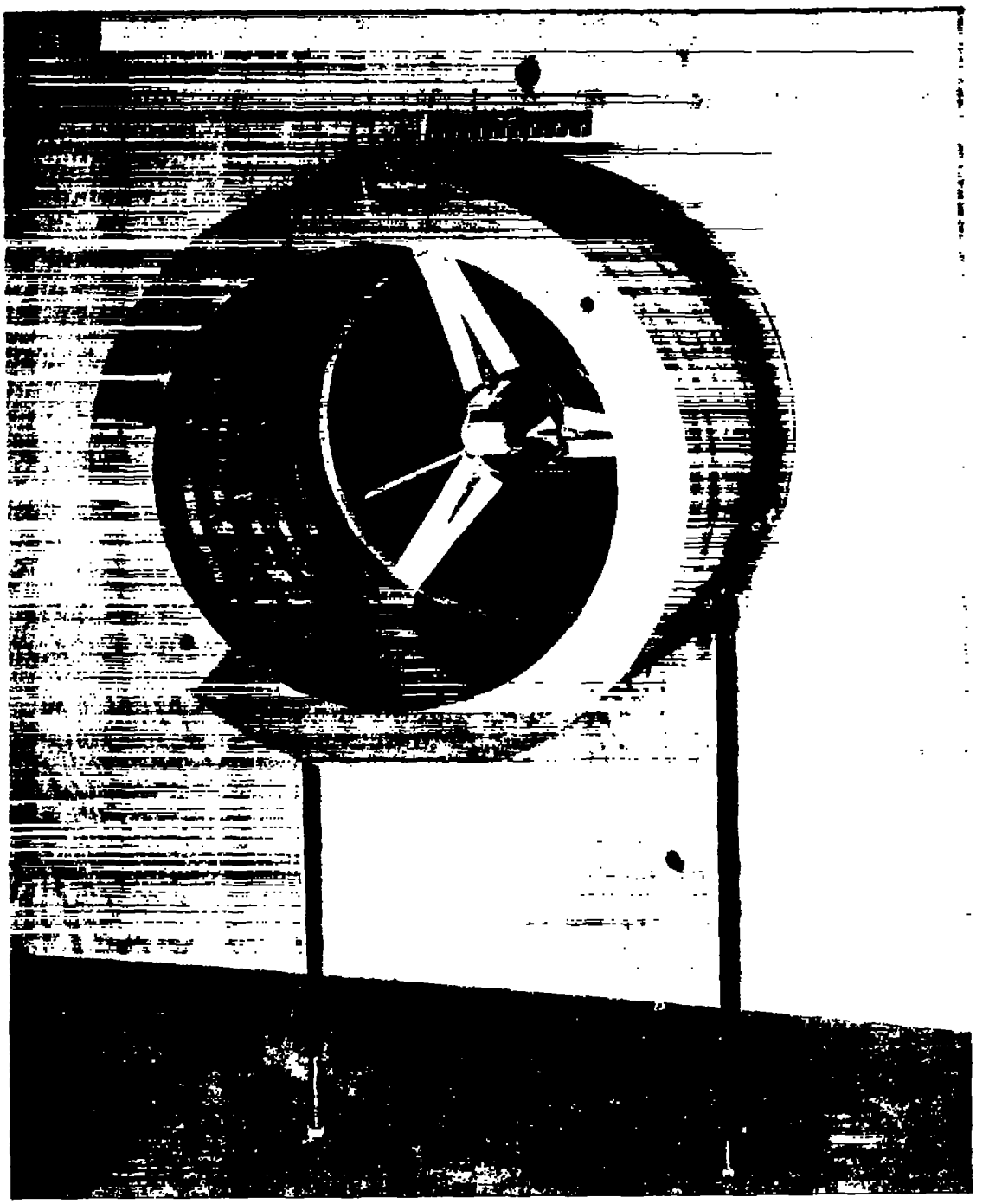

(b) Three-quarter rear view. L-96070

Figure 1.- Concluded.

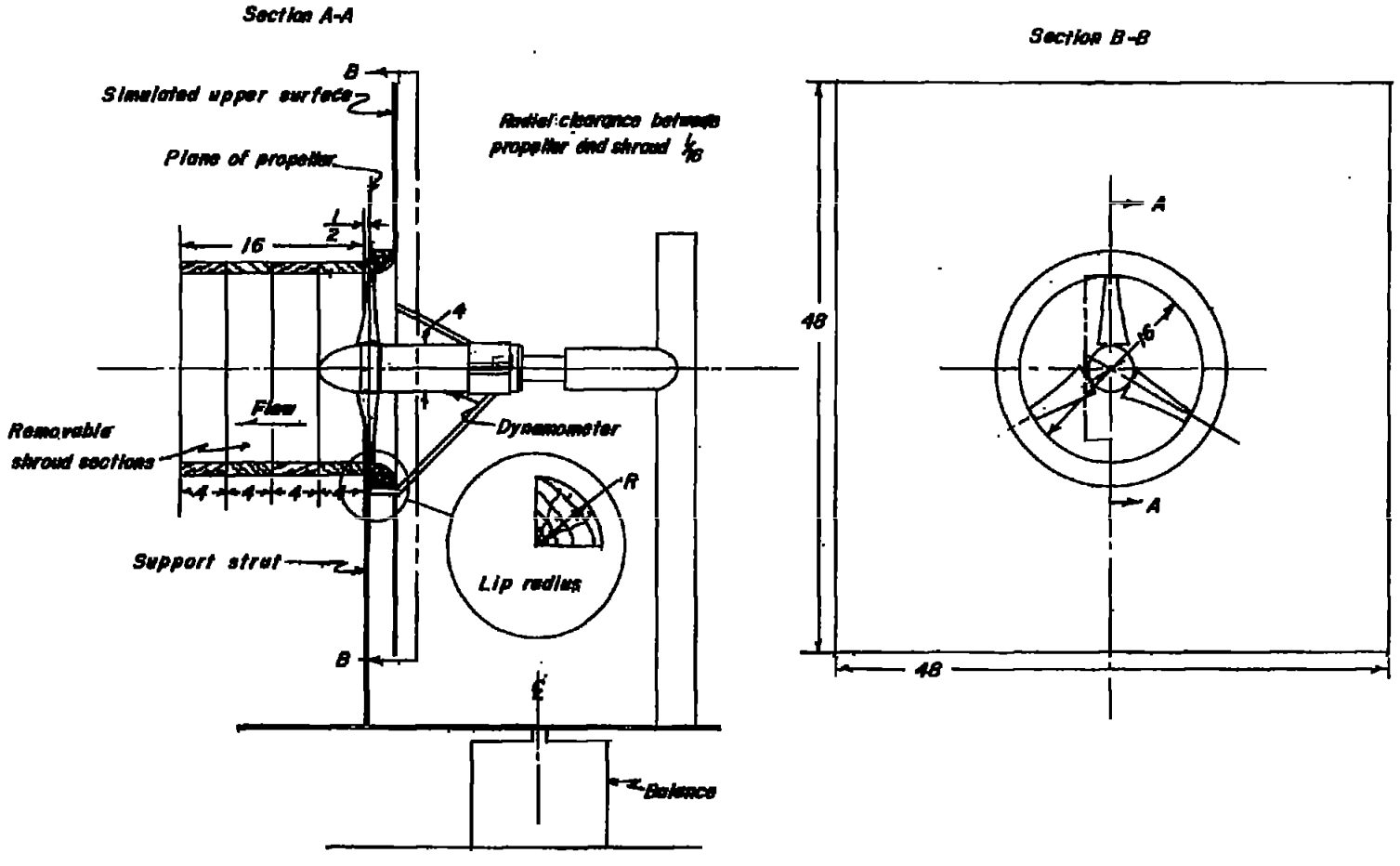

(a) Test configuration mounted on balance.

Figure 2.- Sketch showing test apparatus and propeller-shroud combination mounted in simulated wing.

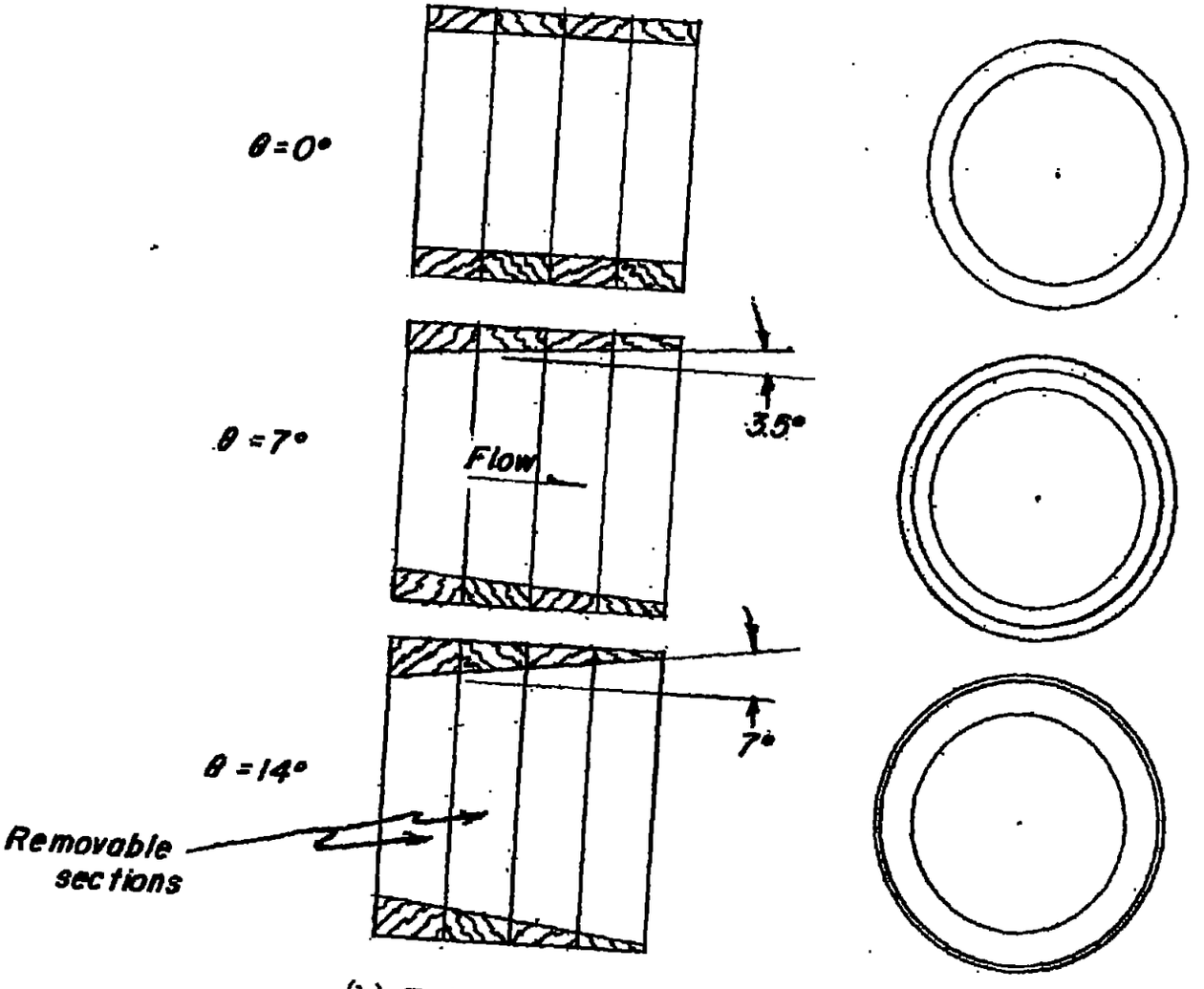

(b) Sketch of shroud configurations.

Figure 2.- Concluded.

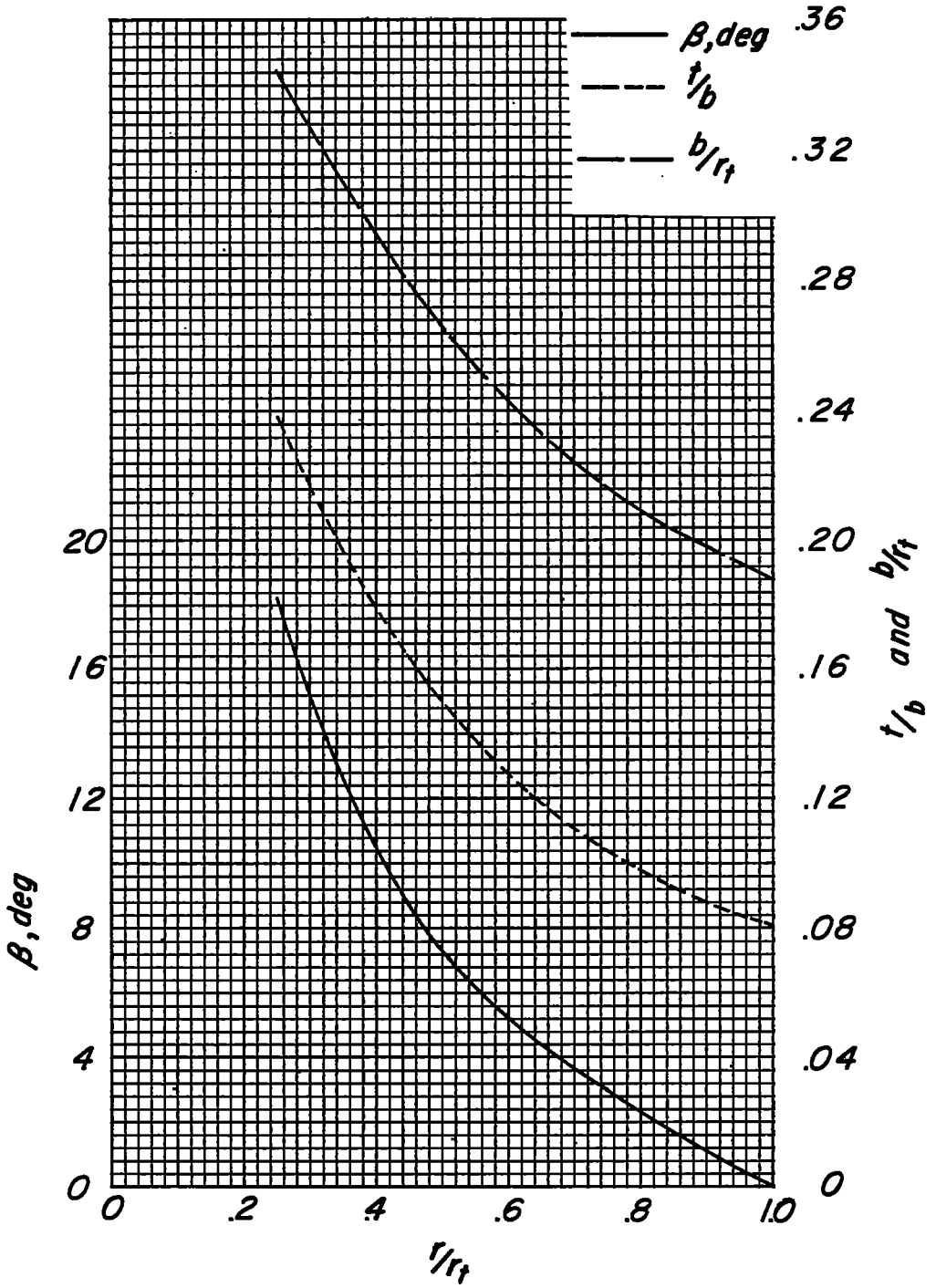

Figure 3.- Blade-form curves of propeller. Clark Y airfoil section.

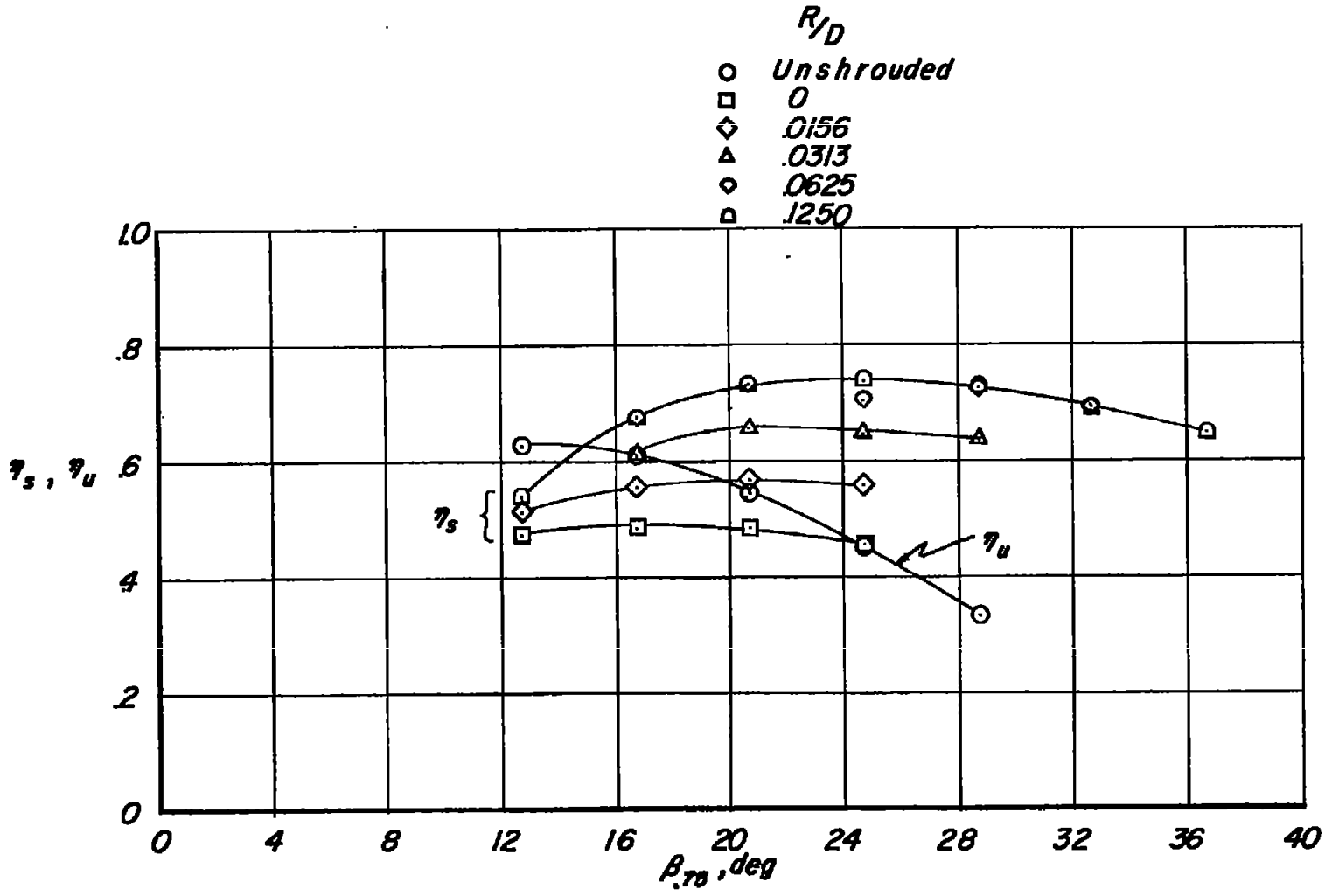

Figure 4.- Effect of propeller blade angle on static thrust efficiency for unshrouded propeller and for the shrouded propeller with no diffusion. $\frac{l}{D} = 1.03$.

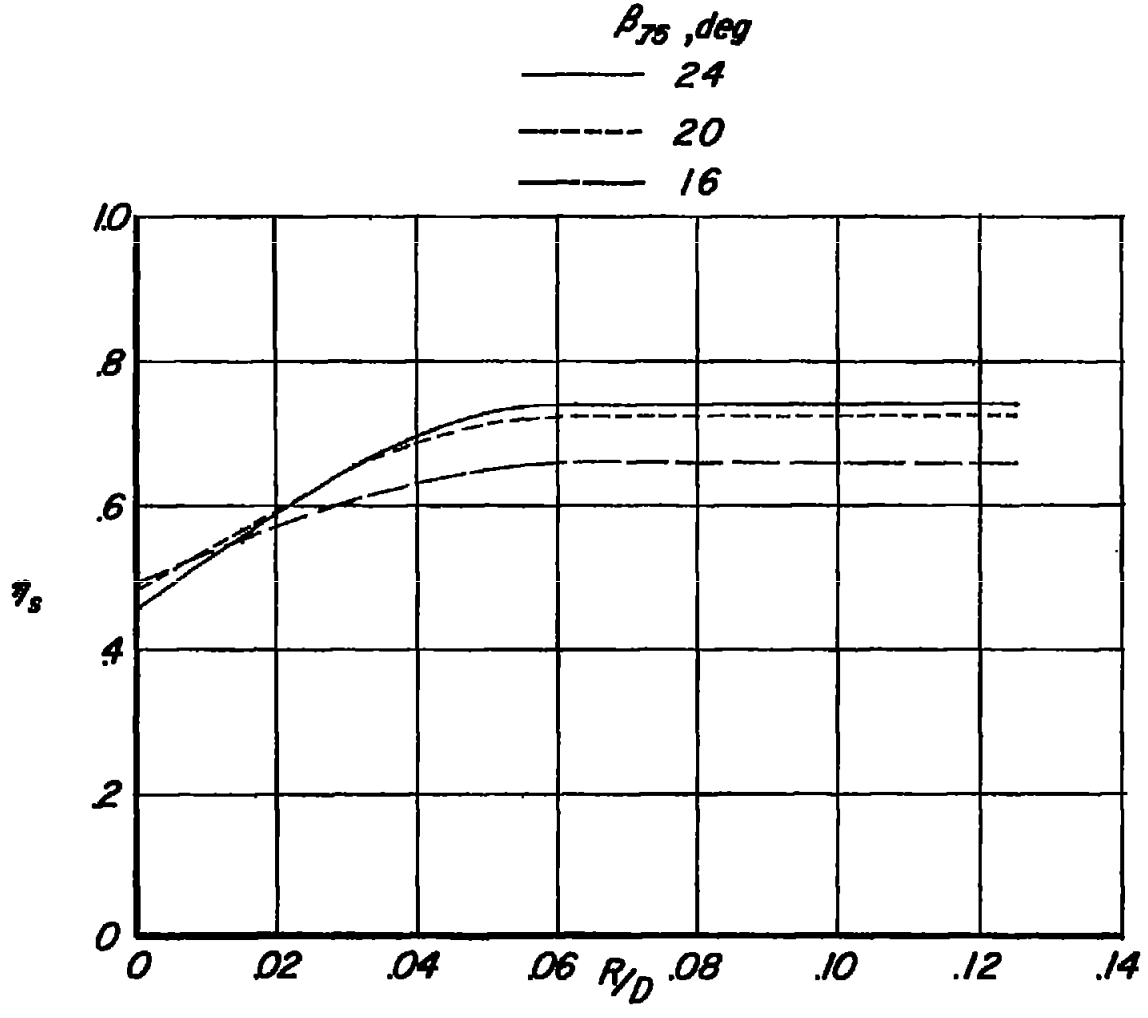

Figure 5.- Effect of lip radius ratio on static thrust efficiency at several blade angles. $\frac{l}{D} = 1.03$.

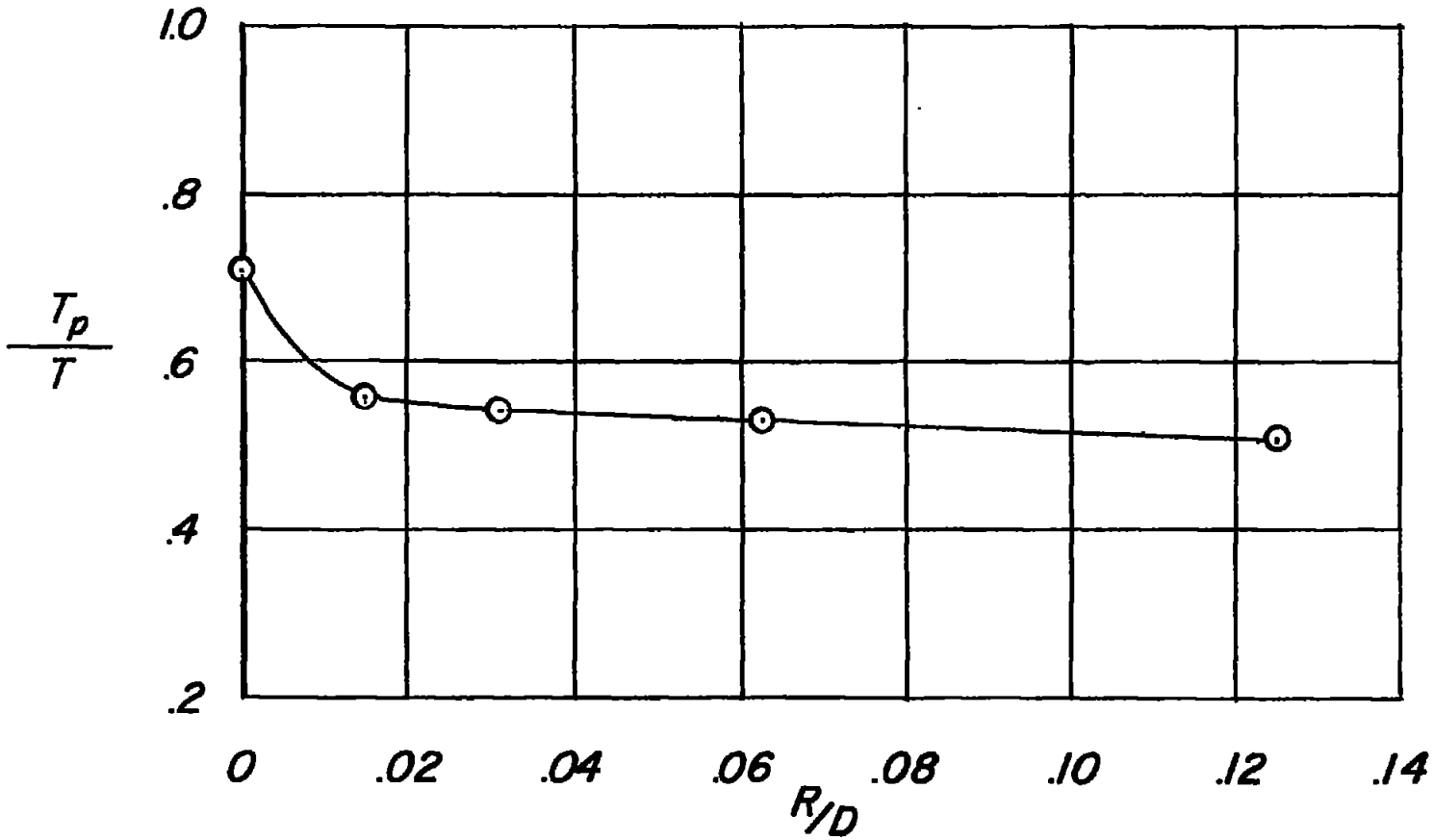

Figure 6.- Experimental variation of propeller thrust ratio T_p/T with lip radius ratio at the propeller blade angle for maximum static thrust efficiency. $\frac{A_E}{A_D} = 1.0$; $\frac{l}{D} = 1.03$.

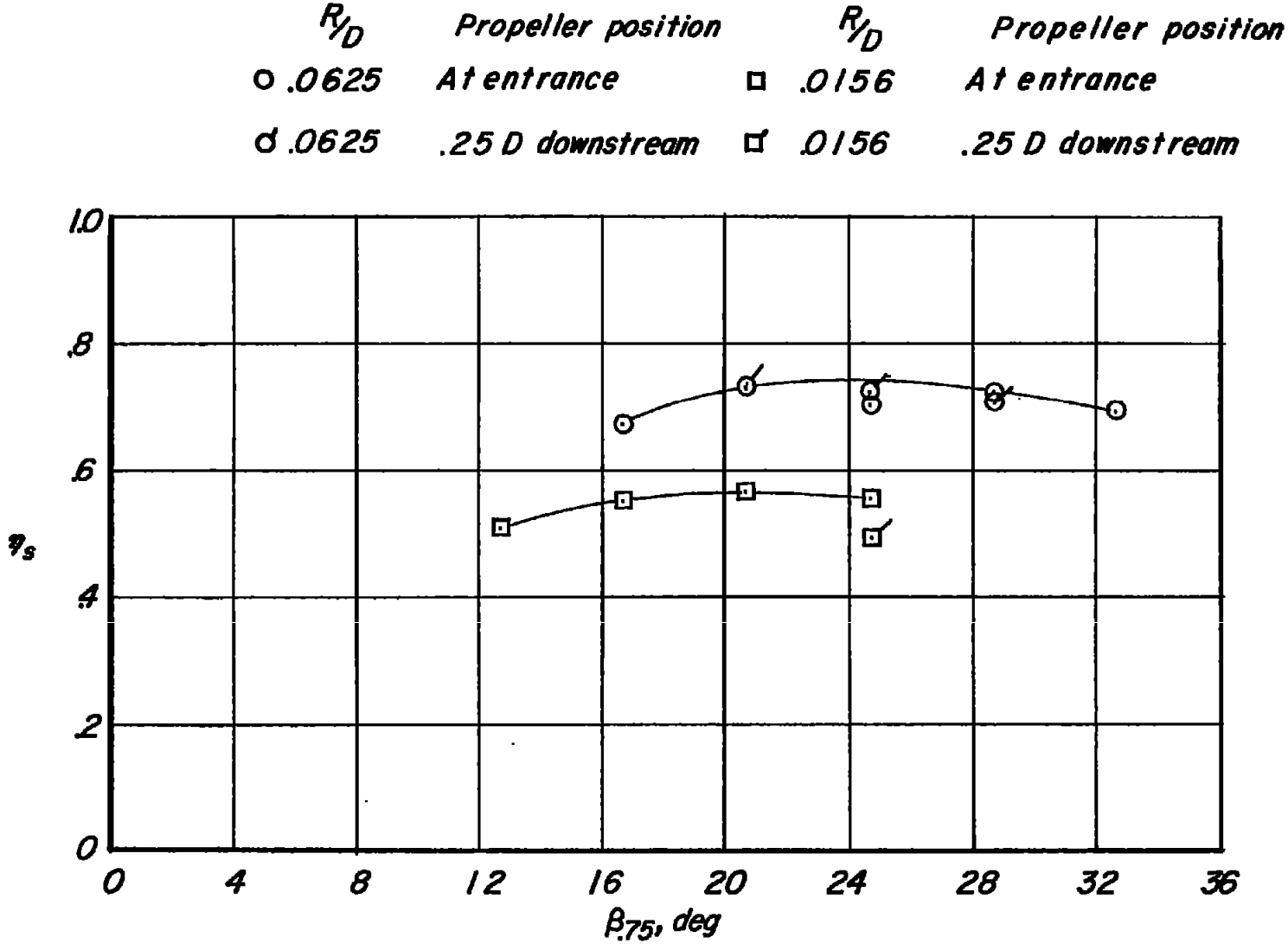

Figure 7.- Effect of propeller location downstream in shroud.

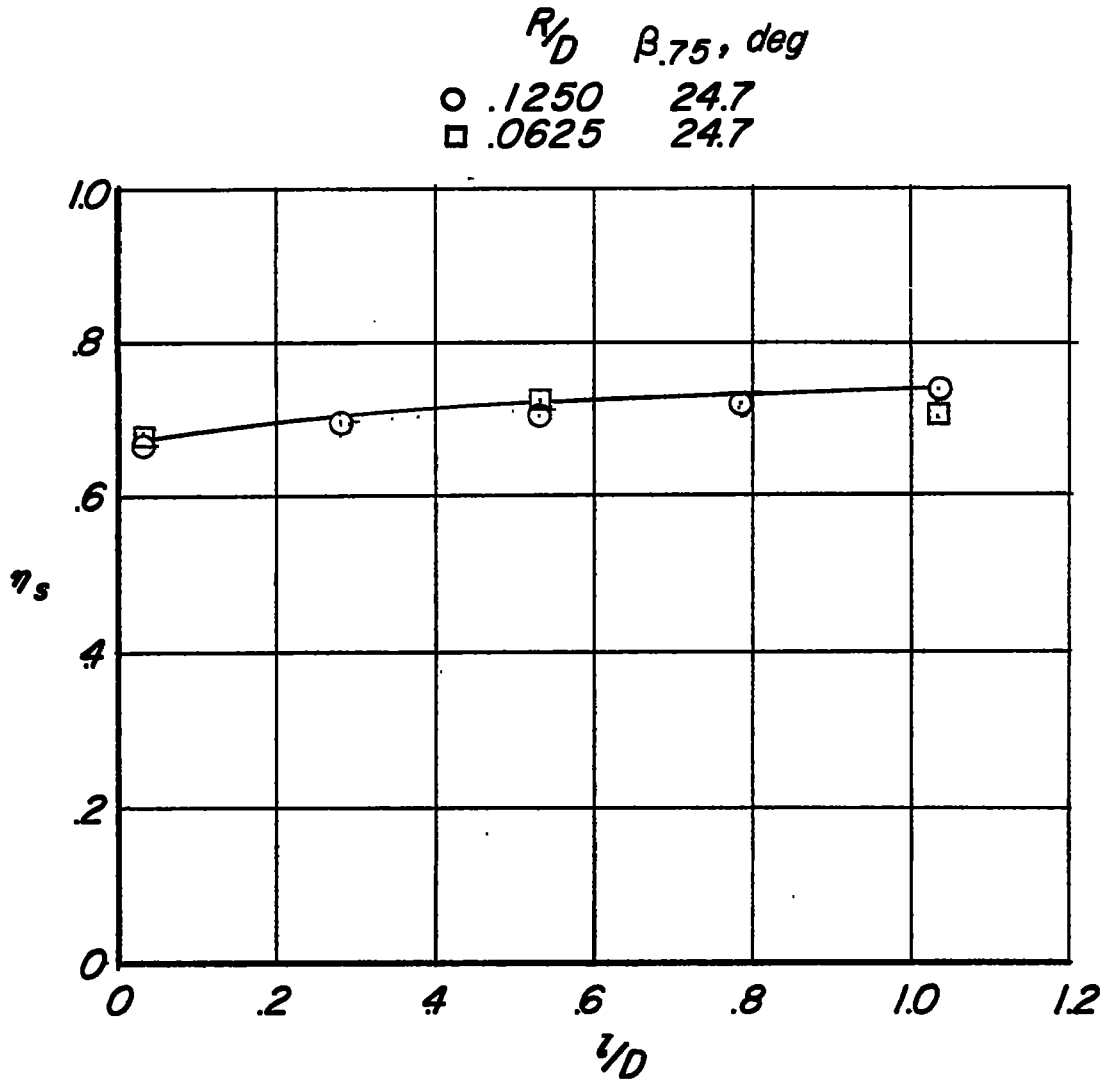

Figure 8.- Effect of shroud length on static thrust efficiency with no diffusion in shroud.

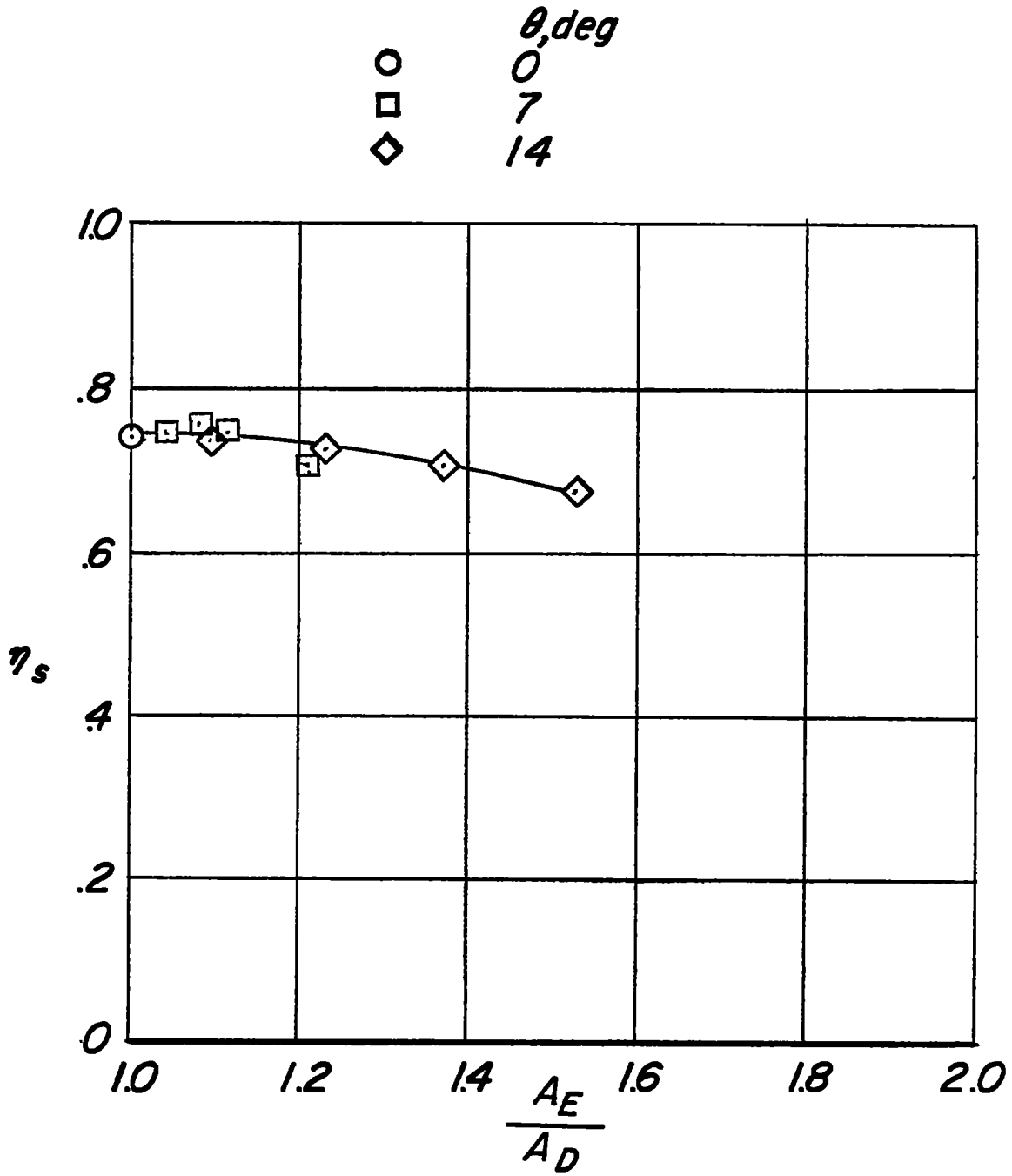

Figure 9.- Variation of static thrust efficiency with shroud-exit area ratio. $\frac{R}{D} = 0.1250$; $\beta_{.75} = 24.7^{\circ}$.

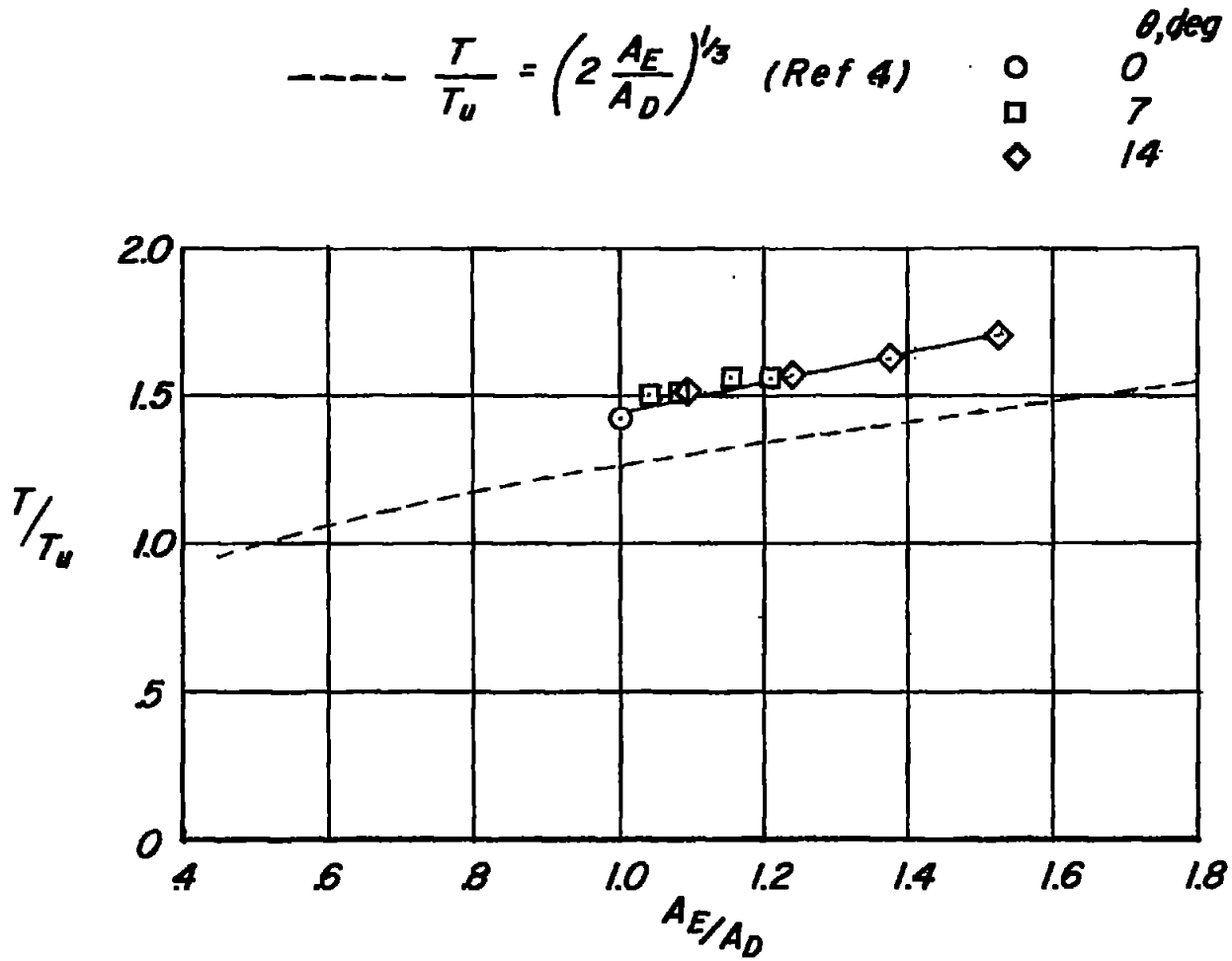

Figure 10.- Variation of thrust ratio T/T_u with exit area ratio A_E/A_D at constant power and maximum efficiency.

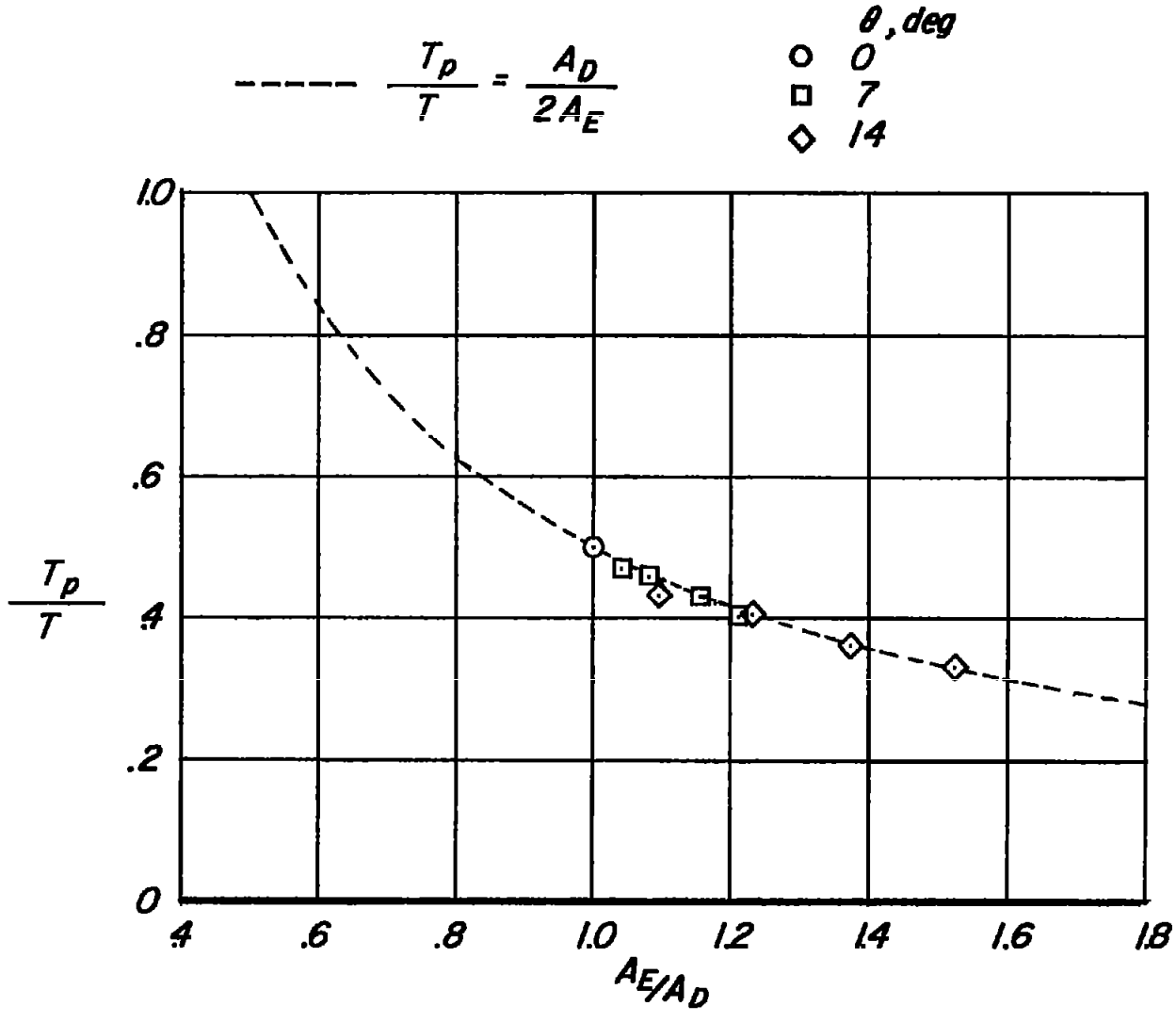

Figure 11.- Variation of propeller thrust ratio T_p/T with shroud-exit area ratio.

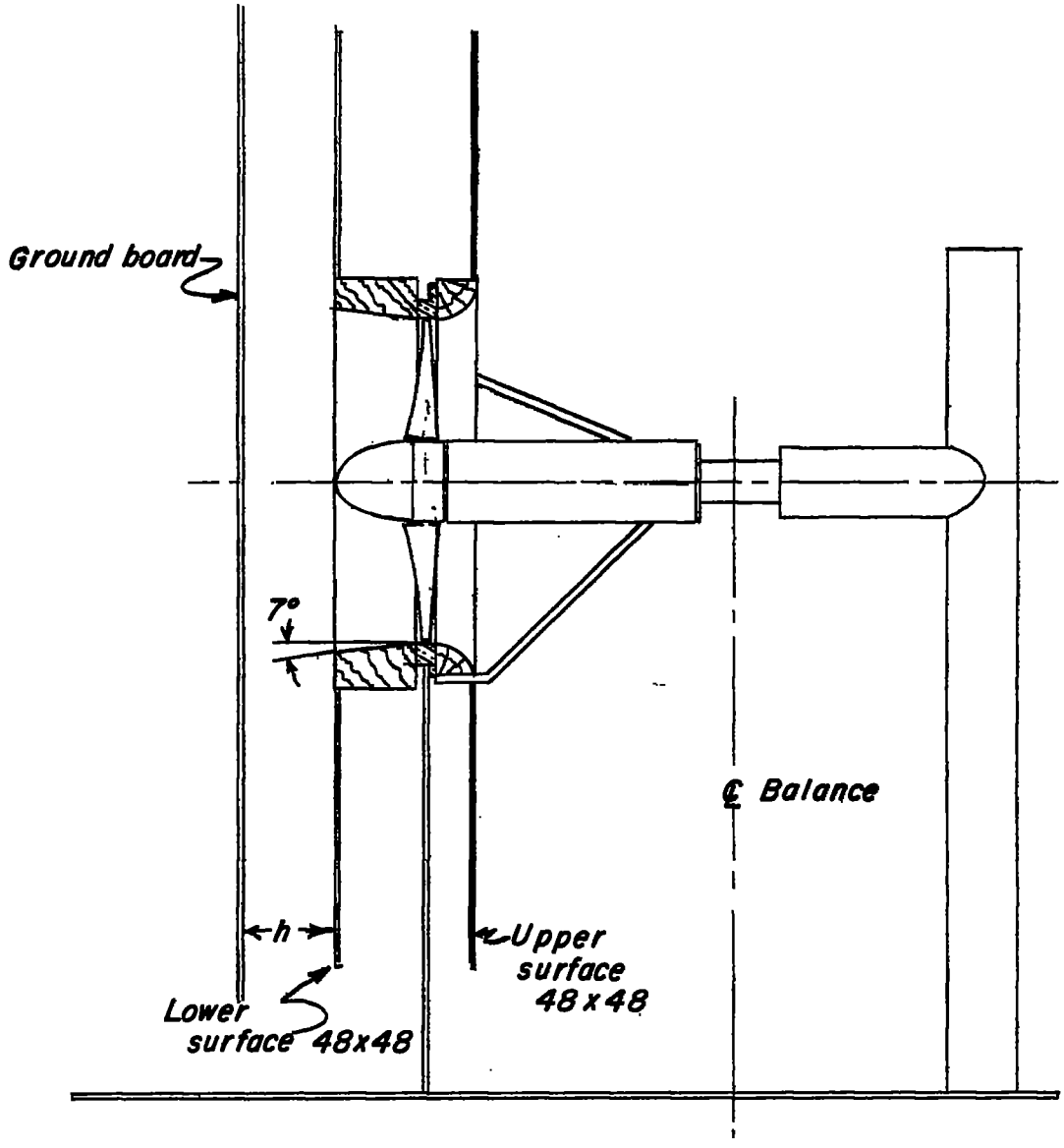

Figure 12.- Sketch of configuration used in ground-proximity tests.

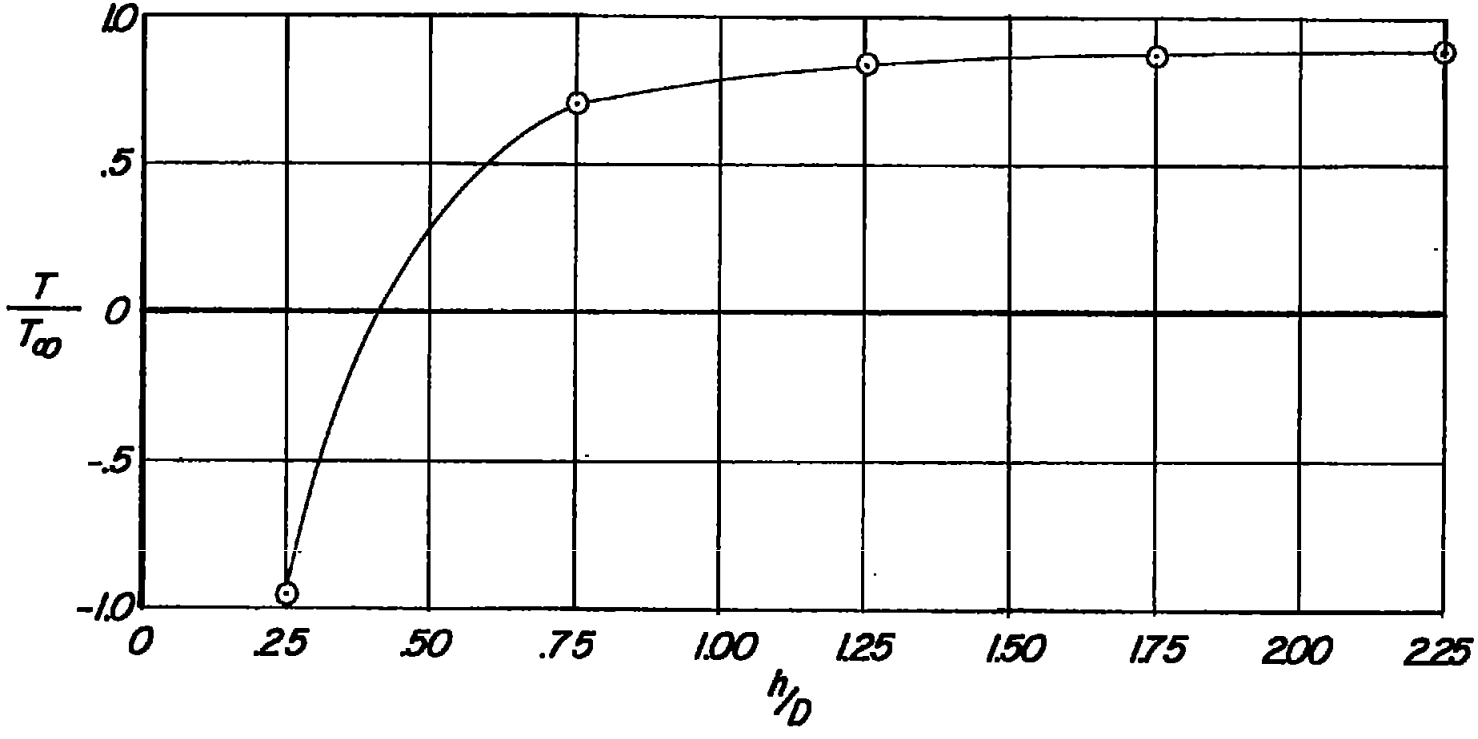

Figure 13.- Effect of proximity of ground to shroud exit on static thrust of a shrouded propeller submerged in a wing. $\frac{l}{D} = 0.28$; $\frac{R}{D} = 0.125$.

NACA - Langley Field, Va.