542
NACA TN 3253
TN 3253 c.1
TECH LIBRARY KAFB, NM
0066048

NATIONAL ADVISORY COMMITTEE FOR AERONAUTICS

TECHNICAL NOTE 3253

LOAN COPY: RETURN TO
AFWL TECHNICAL LIBRARY
KIRTLAND AFB, N. M.

SOME EFFECTS OF EXPOSURE TO EXHAUST-GAS STREAMS ON EMITTANCE AND THERMOELECTRIC POWER OF BARE-WIRE PLATINUM RHODIUM - PLATINUM THERMOCOUPLES

By George E. Glawe and Charles E. Shepard

Lewis Flight Propulsion Laboratory
Cleveland, Ohio

Washington
August 1954

TECH LIBRARY KAFB, NM

0066048

NATIONAL ADVISORY COMMITTEE FOR AERONAUTICS

TECHNICAL NOTE 3253

SOME EFFECTS OF EXPOSURE TO EXHAUST-GAS STREAMS ON EMITTANCE AND THERMOELECTRIC POWER OF BARE-WIRE PLATINUM RHODIUM - PLATINUM THERMOCOUPLES

By George E. Glawe and Charles E. Shepard

3050

CP-1

SUMMARY

Tests have been conducted to study the effect on unshielded platinum rhodium - platinum thermocouples of exposure to exhaust gases produced by the combustion of propane, 72-octane gasoline, and MIL-F-5624A grade JP-4 fuel.

In all cases where an apparent error in temperature indication occurred, the error was accounted for principally by an increase in radiation error caused by the increase in effective total hemispherical emittance of the thermocouple wire. Representative values of effective emittances obtained in the experiments were of the order of 0.2 for a new thermocouple, 0.3 for a thermocouple exposed to exhaust gases which left a dulled platinum surface, and 0.5 for a thermocouple exposed to a luminous exhaust-gas stream which contained large amounts of unburned carbon and exhaust residue that coated the wires.

The exposure caused negligible change in the thermoelectric power of the thermocouples. The value of the thermoelectric power after exposure fell well within the standard Instrument Society of America tolerances for such wires.

INTRODUCTION

The use of thermocouple probes for measuring the jet-engine exhaust-gas temperature poses problems of compromise among such factors as ability to withstand high-velocity and high-temperature conditions, conduction and radiation errors, recovery characteristics, and time response. Some of the factors affecting the compromise between ruggedness and accuracy are discussed in reference 1.

Aside from the fact that the platinum rhodium - platinum thermocouples can be used above the temperature range of the common base metal thermocouples, they have the added advantage of an initially low surface emissivity which contributes a lower radiation error than that of a base metal thermocouple under similar operating conditions. However, various investigators have revealed the possibility of chemical contamination of platinum rhodium - platinum thermocouples in the combined presence of silicon, sulfur, and a reducing atmosphere, which embrittle the wire and also affect the thermoelectric power (ref. 2). There is also a small change in thermoelectric power caused by oxidation or volatilization of the wire and by diffusion of rhodium from the platinum rhodium alloy side into the platinum side of the junction (ref. 3). 3050

If such effects are appreciable when unshielded platinum alloy thermocouples are used to measure temperatures in jet engines, the permissible conditions of use of this thermocouple material would be restricted. These effects would be increasingly important in designs in which fine bare wires are used to minimize radiation and time-lag errors.

An investigation of some effects of exposure to exnaust gases on the temperature indicated by unshielded platinum rhodium - platinum thermocouples is discussed in this report.

The tests consisted of exposing bare-wire, platinum 13 percent rhodium - platinum thermocouples to various exhaust gases and of determining the effect of the exposure on the thermoelectric power and on the error due to radiant heat loss.

This work is part of a program of research in high-temperature measurements being conducted at the NACA Lewis laboratory.

METHOD OF INVESTIGATION

In general, the method of investigation was conducted in the following sequence:

(1) Determination of the thermoelectric power of a newly constructed thermocouple

(2) Continuous exposure of the thermocouple to exhaust-gas streams of various compositions at various temperatures

(3) Comparison of the temperature indicated by the test thermocouple with that of a reference thermocouple periodically inserted into the gas stream for a very brief period

(4) Microscopic examination of the surface condition of the thermocouple

(5) Redetermination of the thermoelectric power

(6) Direct measurement of effective emittance of the exposed wire

The effective emittance and related terms are defined, in accordance with the discussion in references 4 and 5, as follows:

(1) Total hemispherical emissivity ε_{ht} is the ratio of the total power radiated by unit area of an opaque, polished, clean body to the power that would be radiated by unit area of a black body at the same temperature.

(2) Total hemispherical emittance $\varepsilon_{ht'}$ is the ratio of the total power radiated by unit area of a body of any surface condition to the power that would be radiated by unit area of a black body at the same temperature.

(3) Effective emittance $\varepsilon_{eht'}$ of the thermocouple wire is the total hemispherical emittance of a wire whose surface condition has been altered. It is computed by using the Stefan-Boltzmann law with the value of the original wire diameter.

3050

CT-1 back

APPARATUS

All the platinum rhodium - platinum thermocouples used in the tests were constructed from 0.020-inch-diameter wire with the exception of those exposed in ram-jet engines which were constructed from 0.040-inch-diameter wire. Probe configurations varied, but in all cases the exposed thermocouple shape was representative of a right-circular cylinder in crossflow. Three probe configurations for the 0.020-inch-diameter wires are shown in figures 1 and 2.

The junctions of the thermocouples were formed by resistance butt welding. This fabrication method left a "bead" of excess material at the junction. A few of the initial test thermocouples had this bead at the junction, but an improved method of fabrication involving a swaging die eliminated this and formed thermocouples of uniform diameter.

Thermocouples were exposed to the exhaust gases from the following heat sources:

(a) Meker type burners using propane gas (apparatus A)

(b) A high-temperature tunnel with a brick-lined combustor burning propane fuel (apparatus B)

(c) A high-temperature tunnel with an Inconel combustor burning 72-octane fuel (apparatus C)

(d) Turbojet and ram-jet engines using MIL-F-5624A grade JP-4 fuel.

Other principal equipment consisted of an emittance measuring apparatus and a calibration furnace.

Meker Burners

3050

Two Meker type burners (fig. 1), one operating rich and the other lean, were placed adjacent to each other. Each of these burners had over it a $1\frac{1}{2}$-inch-inside-diameter tube, 12 inches long, to provide a mixing region for the hot gases so that a sizable uniform test zone could be obtained. The burners operated on propane-air mixture. The over-all fuel-air ratios f/a were measured with an NACA exhaust-gas analyzer (ref. 6). A pneumatic actuator was used to move a group of thermocouples from the outlet of one burner to the outlet of the other. By use of a mechanical cycling arrangement, the probes could be cycled from the lean jet to the rich jet in controllable sequences.

High-Temperature Tunnel with Brick-Lined Combustor

In figure 3 is shown the combustion chamber of a tunnel that was lined with high-temperature fire brick which was, in turn, coated with a refractory paste. The burner operated on propane-air mixtures. The brick walls were incandescent and approximately at the temperature of the burning gas. The combustion chamber had a 3/4-inch outlet nozzle through which the exhaust gases were accelerated into a 4-inch-diameter Inconel duct leading to an exhauster system of controllable pressure. The test thermocouples were placed at the outlet of the nozzle. The temperature of the duct walls around the test section varied between 400° and 500° F during the tests.

High-Temperature Tunnel with Inconel Combustor Section

A high-temperature tunnel with an Inconel combustor section is shown in figure 4. The fuel used in this tunnel was 72-octane gasoline which was sprayed into the air stream upstream of the flame holder. The gas passed from the combustor, into a 12-inch-diameter circular duct, then through a 4-inch-diameter converging nozzle, and into a low-pressure region. Upstream and downstream pressures were individually controllable. The test thermocouples were placed at the outlet of the nozzle. The temperature of the water-cooled test-section walls ranged from 100° to 150° F.

Emittance Apparatus

The emissivity of new wire and the effective emittance of exposed thermocouple wire were determined experimentally by electrically heating the wire in an evacuated bell jar and calculating the emissivity or emittance ε from the heat-balance equation:

$$I^2R = \varepsilon \pi D l \sigma (T^4 - T_0{}^4)$$

3050

where

I current through wire, amp

R resistance between potential terminals, ohm

D original wire diameter, in.

l distance between potential terminals, in.

σ Stefan-Boltzmann constant (3.51×10^{-12} watts/in.^{2} $(^{\circ}R)^4$)

T absolute temperature of wire, $^{\circ}R$

T_0 absolute temperature of tank wall, $^{\circ}R$

Calculations of effective emittances were based on the original wire diameter because this diameter can be conveniently used in equations for radiation corrections. For a detailed description of the apparatus and the method for determination of effective emittance see appendix A.

Calibration Furnace

The thermocouples were calibrated in a $4\frac{1}{2}$-kilowatt electrically heated furnace with an 18-inch depth of immersion by using a precision manually balanced potentiometer and a spotlight galvanometer.

TESTS AND RESULTS

Calibration of New Wire

The total hemispherical emissivity of new wires was determined experimentally in the emittance apparatus. The tests were made on a platinum wire, a platinum 13 percent rhodium wire, and a platinum rhodium - platinum thermocouple; and the results are shown in figures 5 and 6. The emissivity increased linearly with increasing temperature (from 0.12 to 0.24 between 900° and 2600° F). The experimental data for platinum wire are compared in figure 5 with results presented in reference 7.

The thermoelectric power of several thermocouples, made from matched spools of new wire, was measured in the calibration furnace. The thermocouples indicated temperatures within 1° F of a working standard thermocouple. Thermocouples used in the tests were constructed of wire from these calibrated spools.

The platinum 13 percent rhodium, and the platinum thermocouple wires which were used to fabricate working standard thermocouples for comparison with the test thermocouples had been matched and certified by the National Bureau of Standards to yield temperature measurements to an absolute accuracy of ±5° F. 3050

In calibrating the thermocouples used in the tests, the junction of the test and working standard thermocouples were brought into intimate contact and held together by a wrapping of three turns of 20-mil platinum wire. The accuracy of measuring the deviation of the test thermocouples from the standard thermocouple was 1° F. Differential electromotive force readings between like wires on the test and standard thermocouples were made on a precision potentiometer at 1800°, 1500°, 1000°, 500°, and 80° F. This procedure obviated the need for precise knowledge of the absolute value of the temperature.

Exposure to Exhaust Gases from Meker Burners Using a Propane and Air Mixture (Apparatus A)

Test 1. - Thermocouples were exposed for 20 hours to the rich burner of apparatus A. The fuel-air ratio f/a was 0.090 and the indicated temperature was 2300° F. Redetermination of thermoelectric power showed a maximum deviation of 0.2 percent (4° F) at 2000° F from the value of the working standard thermocouple. The surface condition of the wires was not appreciably altered; so the final effective emittance was not checked.

Test 2. - A cycling experiment was then conducted in which a group of thermocouples was cycled between the rich and lean burners of apparatus A. The cycling period was arbitrarily chosen to simulate exposure of a thermocouple to the exhaust gas of a jet engine whose over-all fuel-air ratio is lean except for short periods at start conditions. One cycle lasted 30 minutes, during which time the thermocouples were exposed to the rich gas mixture (f/a of 0.090) for 1 minute and to the lean gas mixture (f/a of 0.045) for 29 minutes. The total running time was 200 hours (400 cycles). The wires showed only slight physical change, and redetermination of thermoelectric power showed a maximum deviation of 0.2 percent (4° F) at 1850° F from the value of the working standard thermocouple.

Exposure to Exhaust Gases from Brick-Lined Combustor Using

Propane and Air Mixture (Apparatus B)

Test 3. - Thermocouples were exposed to the clean exhaust gases of apparatus B for 5 hours under the following conditions: f/a, 0.055; indicated temperature, 2540° F; Mach number, 0.20; static pressure, 1 atmosphere. The term "clean exhaust gas" is used in this report to denote an exhaust gas which has only small quantities of solid particles and is generally nonluminous as opposed to a "dirty exhaust gas" which contains appreciable exhaust residue and is generally indicated by a luminous flame.

3050

The deviation of indicated temperature of the thermocouples when compared with a reference probe periodically inserted into the gas showed a random temperature difference with an average value of 3° F and a maximum value of 6° F.

Test 4. - The tunnel was then operated for 4 hours at a rich f/a of 0.080, with an indicated temperature of 2600° F, a Mach number of 0.20, and a static pressure of 1 atmosphere. The exhaust gas was luminous, with streaks of incandescent particles.

The indicated temperature difference between a reference thermocouple and the test thermocouples increased exponentially with time, as shown in figure 7(a). The deviation was 90 percent complete in about 2 hours. The maximum indicated temperature deviation after 4 hours was -125° F. The test thermocouples were examined and found to be coated with reddish-brown exhaust residue and refractory sediment on the upstream face. A photograph of a new wire before exposure to the exhaust gases is shown in figure 8(a), and two of the test thermocouple wires after exposure in apparatus B are shown in figure 8(b). The final effective emittance of one of the thermocouples was checked in the emittance apparatus and was found to be on the order of 0.5.

Determination of thermoelectric power showed a maximum deviation of 0.2 percent (4° F) at 1800° F from the value of the working standard thermocouple.

Calculation of the effective-emittance increase required to produce the final temperature difference of -125° F encountered in the tests yielded a required effective-emittance increase of 0.34. This gives a final effective emittance of 0.55, assuming an initial value of 0.21 at 2475° F (obtained from fig. 6(b)), which is on the same order of magnitude as the final effective emittance determined in the emittance apparatus. The calculation procedure is described in appendix B, and a curve of the progressive increase in effective emittance with time of exposure is shown in figure 7(b).

Test 5. - Some of the thermocouples (from test 4) were then reexposed to the conditions of test 3 for 6 hours to see if they would be "cleaned up" by a lean fuel-air ratio. Differential measurements with a reference probe showed the -125° F deviation remained constant, and examination of the thermocouples at shutdown exhibited no change in the wire surface conditions.

Exposure to Exhaust Gases from Inconel Combustor Burning 72-Octane Gasoline (Apparatus C)

3050

Test 6. - Thermocouples were exposed to the exhaust gases of apparatus C for 10 hours at the following conditions: f/a, 0.03; indicated temperature, 1670° F; Mach number, 0.30; and static pressure, 1 atmosphere. The exhaust gas in the test section was nonluminous except for small amounts of incandescent particles. Differential readings with respect to the value of a reference thermocouple showed an exponential-type trend which attained a maximum decrease of -15° F, as shown in figure 9(a). An examination of the test thermocouples disclosed a dulled, slightly rough surface with no dark exhaust deposits. Calculations of the effective-emittance increase necessary to account for the decrease in the temperature indication of the test thermocouples showed that the emittance would have to change from an initial value of 0.17 to a final value of 0.28 during the exposure.

Test 7. - Thermocouples were exposed to exhaust gases in apparatus C for 6 hours. The fuel-air ratio was 0.055, the indicated temperature was 2280° F, the Mach number was 0.25, and the static pressure was 0.8 atmosphere. The exhaust gases were highly luminous with signs of free carbon particles and exhaust residue. Readings of the temperature difference with respect to a reference thermocouple showed an exponential-type trend which was 90 percent complete in $3\frac{1}{2}$ hours and which attained a maximum difference of -50° F as shown in figure 9(b). Redetermination of thermoelectric power indicated a maximum deviation of 0.2 percent (4° F) at 1800° F. The change in effective emittance based on the measured temperature difference was calculated to have a final value of 0.4 at 2230° F, as shown in figure 9(c). Figure 8(c) is a photograph of one of the test thermocouples taken at 45° from the upstream face. Exhaust deposit, such as is seen in figures 8(c) and (d), was removed by immersion of the thermocouple in a hot concentrated chromic and sulfuric acid solution, exposing a dulled platinum surface underneath.

Exposure to Jet-Engine Exhaust Gases

Turbojet engines. - Thermocouples of 0.020-inch-diameter wire were placed in the combustor outlets and tail pipes (without afterburning) of

turbojet engines to determine the effects of exposure on emittance and on thermoelectric power. The engines used JP-4 fuel; the exposure time ranged from 28 to 46 hours. Thermocouples exposed in combustor outlets (about 1600° F) exhibited a smooth coating of dark exhaust residue on the upstream face and grey discoloration of the platinum rhodium exposed section. Final effective emittances were approximately 0.4 for these thermocouples. The initial rate of change of effective emittance was on the order of the change shown in figure 9(c). Thermocouples exposed in tail pipes (about 1200° F) showed less deposit and discoloration and had effective emittances on the order of 0.3. The greatest error measured in redetermination of thermoelectric power was 0.2 percent (4° F) at 1800° F.

3050

Ram-jet engines. - Thermocouples of 0.040-inch-diameter wire were placed in ram-jet engines (about 3000° F) and subjected to exposure for 1 to 8 hours before removal and inspection. These thermocouples exhibited a dark smooth coating on the upstream face with effective emittances on the order of 0.4. The rate of change of effective emittance for these thermocouples was greater than the rate of change of effective emittance for the thermocouples exposed in turbojet engines. In one case, the effective emittance reached the value of 0.4 within an hour. Calibration for thermoelectric power showed a maximum error of 0.1 percent (2° F) at 1800° F.

CH-2

DISCUSSION

The measurements of thermoelectric power in the calibration furnace showed negligible changes in wire calibration as a result of exposure to the exhaust gases of propane, gasoline, or JP-4 fuel regardless of whether these exhaust gases were rich or lean, dirty or clean, and regardless of the formation of coatings on the wires. The differences in calibration between fresh wires and wires after exposure to exhaust gases were always less than 5° F at 1800° F and hence was less than one-half the limit of error for standard thermocouple wires of this type as recommended by the ISA in reference 8 (±5° to 1000° F and ±0.5 percent from 1000° to 2700° F).

The progressive decrease in indicated temperature of thermocouples exposed to dirty exhaust gases thus appears attributable wholly to a progressive increase in radiant heat loss. The radiant heat loss increases (a) because of an increase in surface area as the wire becomes dirty and (b) because of an increase in the emissivity of the wire as it becomes dirty. These effects can be lumped together if the wire is described as acquiring an increased effective emittance based on the original wire diameter. Such a mode of description is desirable because the original wire diameter is the only diameter conveniently available for computation of radiation error. It should be noted that, because of

the mode of definition of effective emittance, small wires will appear to suffer a greater increase in effective emittance than large wires when the same thickness of deposit is formed on both the small and large wires.

The attribution of the progressive decrease in indicated temperature to a progressive increase in radiation error appears justified by:

(1) The visual correlation between "blackness" or dirtiness of the wire with the deviation of wire-temperature indication from the indication of a clean reference thermocouple inserted only briefly into the exhaust-gas stream. 3050

(2) The qualitative correlation of radiation error with the dirtiness of the gas stream. Thus in relatively clean gases the radiation-error increase ranged no higher than 15° F and the corresponding effective-emittance increase ranged no higher than 0.1, whereas in dirty gases the radiation-error increase ranged up to 125° F and the corresponding effective-emittance increase ranged up to 0.35.

(3) The quantitative agreement between the final effective emittances measured in the emittance apparatus and the final effective emittances computed from the measured radiation error in the exhaust-gas stream.

The correlation of the effective emittance with the visible appearance of the wire provides a means of estimating the effective emittance from the appearance of the wire. After some experience, it was found possible to make estimates to within ±15 percent of the effective emittance obtained by measurements. Figure 10 indicates the correlation between effective emittances and the appearance of the wires as found in these tests.

Although some of the thermocouples from engine tests appeared as highly discolored by exhaust residue as the extreme cases in the tunnel tests, the deposit formed on the thermocouples in the engines did not have so rough a surface finish as the high-effective-emittance deposits formed on the thermocouples in the tunnel tests. Therefore, for the same apparent discoloration, the effective emittance of thermocouples exposed in engines was lower than the effective emittance of thermocouples exposed in the tunnel tests.

Exposure to Clean Exhaust Gases

Under exposure to relatively clean exhaust gases, where only small amounts of solid carbon particles, fuel droplets, tar residue, or other

noncombustible matter are present, the wires were subjected to a mild erosive action. This action produced a roughened, dull grey surface on the upstream face of the wire. The present tests indicate that a final effective emittance of about 0.3 may be expected with an initial rate of increase of about 0.05 per hour.

Exposure to Dirty Exhaust Gases

3050

Thermocouples exposed to dirty exhaust gases, which contained unburned particles and impurities, were coated on the upstream face with a layer of dark, rough, exhaust-gas deposits. The highest value of effective emittance was 0.55, and the initial time rate of change for this test was approximately 0.2 per hour.

CT-2 back

Thermocouples placed at the combustor outlet of turbojet engines burning JP-4 fuel exhibited upstream surface deposits and slight discoloration of the platinum rhodium exposed section, and acquired effective emittances on the order of 0.4. Thermocouples placed in the tail pipes of turbojet engines showed less exposure effect and acquired effective emittances on the order of 0.3. The lower value of final effective emittances reached in tail pipes, as compared with the final values reached in combustors, is caused by the fact that the combustion process is more complete in the tail pipe (without afterburning) and that the turbine assembly intercepts unburned particles and prevents their deposition on the probe in the tail pipe.

Thermocouples exposed to the exhaust gases of ram-jet engines at the exhaust-nozzle exit exhibited dark residue deposited on the upstream face and had final effective emittances of approximately 0.4.

Effect of Fuel-Air Ratio

The preceding results indicate that the extent of accretion of deposit on a wire is dependent on the local fuel-air ratio encountered by the thermocouples in the gas stream rather than on the over-all engine fuel-air ratio for a given hydrocarbon fuel. Thus, at the combustor outlet, where burning was still streaky, maximum values of effective emittance were obtained even though the over-all fuel-air ratios were quite lean.

Time Rate of Increase of Effective Emittance

The increase in effective emittance due to dulling of the wire or to formation of exhaust deposit is necessarily dependent on factors such as the composition of the exhaust gas, the cleanliness of the air supply,

the flow conditions, and so forth, of the gas stream to which the thermocouples are exposed. The time rate of increase of effective emittance and the order of magnitude of the final effective emittance attained in the tests described herein, although applying specifically to the particular combustors used, nevertheless also denote the orders of magnitude of changes to be expected with similar equipment operated in the same ranges of fuel-air ratios, temperatures, and Mach numbers.

Usage of Bare-Wire Platinum Rhodium - Platinum Thermocouples

3050

When thermocouples are used under conditions where the radiation error is appreciable, and where the effective emittance of the wire may change, an uncertainty exists in the radiation correction. At high temperatures, this uncertainty is often the highest single contribution to total uncertainty in temperature measurements. In operations where highest absolute accuracy of temperature measurement is required, it is therefore desirable to use some method of shielding or of retracting the thermocouple from the gas stream during the time when measurements are not being taken.

In operations where long-time reproducibility of temperature indication is required rather than absolute accuracy, pre-exposure to operating conditions is desirable in order to build up a condition of stable effective emittance, even though the resulting uncertainty in the radiation correction may be twice that obtainable with clean wires.

In the tests in apparatus A, B, and C with thermocouples of 0.020-inch-diameter wires, no breakage was encountered even though a large length-to-diameter ratio (L/D of 50) of exposed wire was used to reduce conduction errors. The 0.020-inch-diameter thermocouples placed in jet engines were subject to failure, while the more rugged 0.040-inch-diameter thermocouples in ram-jet engines were not.

Since the primary purpose of this investigation was to study the effects of exposure on the thermocouple indicated temperature, no detailed analysis of optimum configuration or wire size from the standpoint of mechanical ruggedness and service life was made.

CONCLUSIONS

A decrease in the temperature indication of unshielded platinum rhodium - platinum thermocouples exposed to exhaust-gas streams produced by combustion of propane, gasoline, or JP-4 fuel was shown to be attributable to a progressive increase in effective emittance, which results in an increase in radiation error. The effective emittance, based on the original wire diameter, is increased because of the higher emittance due to the coating of exhaust residue and to the greater surface area produced by this coating.

Thermocouples exposed to locally rich exhaust gases containing solid carbon particles, liquid fuel droplets, and unburned impurities became coated with a dark residue that increased the effective emittance to the order of 0.5 under extremely dirty-exhaust-gas conditions and to a value of approximately 0.4 under average conditions.

Upon exposure to relatively clean exhaust gases, which contain only small percentages of solid carbon particles, fuel droplets, tar residue, and so forth, the wire suffered mild erosion effects which left a dulled platinum surface having an effective emittance somewhat higher than that of a new wire. The effective emittance may reach a value of about 0.3 as compared with a value of about 0.2 for new clean wire.

3050

Effective emittance is correlated with the visible appearance of the wire surface, so that with practice the effective emittance could be estimated to ±15 percent of measured values.

The time rate of change of effective emittance due to erosion or accretion of residue is dependent on the composition of the exhaust gas, the cleanliness of the air supply, the flow conditions, and so forth, to which the thermocouple is exposed. The initial time rates of change of effective emittances studied in the tests reported herein for the particular combustors used ranged from 0.2 per hour in dirty-exhaust-gas streams to 0.05 per hour in relatively clean exhaust gases.

The exposure of the thermocouples to exhaust gases caused negligible change in the thermoelectric power of the thermocouples. The thermoelectric power after exposure fell well within the standard ISA tolerances for platinum rhodium - platinum thermocouple wire ($\pm 5^{\circ}$ to 1000° F and ± 0.5 percent from 1000° to 2700° F).

Lewis Flight Propulsion Laboratory
National Advisory Committee for Aeronautics
Cleveland, Ohio, May 21, 1954

APPENDIX A

EMITTANCE APPARATUS

The total hemispherical emissivity of new wires and the effective emittance of thermocouples whose surfaces had been altered by exposure to exhaust gases were determined by measuring the electric-power input required to maintain a length of the thermocouple wire at constant temperature while the heat was being dissipated primarily by radiation (ref. 7). Conduction end losses were minimized by freely supporting a long length of the wire or thermocouple between two binding posts serving as current terminals and taking potential measurements along a short central portion with fine wires attached to the test wire. Thermocouples which had been exposed to exhaust gases were removed from their probes and mounted in like manner between the binding posts. Convective heat transfer was rendered negligible by conducting the tests at a sufficiently low ambient pressure, as recommended in reference 9. The conclusions of this reference were verified by a series of test runs through a range of low pressures. 3050

A picture of the test assembly with a thermocouple wire in place is shown in figure 11. For clarity the photograph has been retouched to reveal the fine wire potential leads which would otherwise be barely visible. The thermocouple is freely suspended between binding posts 14 inches apart with the junction at the midpoint. A 3-mil platinum wire was wrapped and twisted around the 20-mil platinum rhodium thermocouple wire at a point 1/2 inch from the main junction, and a 3-mil platinum rhodium wire was similarly attached 1/2 inch from the main junction on the platinum wire of the 20-mil thermocouple. Two additional 3-mil platinum and platinum rhodium wires were also attached to the main platinum and platinum rhodium thermocouple wires, respectively, at points 5 inches on either side of the main junction.

The testing was done in a large steel bell jar which was evacuated to a pressure less than 0.05 micron of mercury. The wire was electrically heated and measurements were taken of the temperature and electrical resistance of the central 1-inch test portion. The electric circuit is shown in figure 12. A 60-cycle alternating current was passed through path A and measured with a calibrated iron vane ammeter.

The resistance of the tested portion (x-y-z) was measured with a double bridge, using two decade resistance boxes which were simultaneously adjusted. Null balance was detected with a cathode-ray oscilloscope preceded by a step-up transformer.

The thermal electromotive force e_1 of the main junction (y) relative to ambient temperature and the differential thermal electromotive

forces e_2 and e_3 between the central junction and each of the end points (x and z) of the 1-inch test portion were measured with a manually balanced precision potentiometer. A low-pass filter was used to bypass the 60-cycle current around the potentiometer. Capacitance C, consisting of a back-to-back arrangement of electrolytic capacitors, was used to prevent short circuiting of the thermal electromotive force by the secondary winding of the power transformer T. The effectiveness of this arrangement was tested by verifying that no d-c potential difference appeared across the 0.01-ohm shunt in series with the transformer secondary winding. The circuit was also tested to verify that there were no spurious electromotive forces at the potentiometer by replacing the thermocouple and all platinum rhodium lead wires with platinum and noting that no net electromotive force then appeared at the terminals of the potentiometer.

3050

The effective emittance ε at temperature is computed from the expression for heat transfer by radiation:

$$I^2R = \varepsilon\pi Dl\sigma(T^4 - T_0^{\ 4})$$

where

I current through wire, amp

R resistance between potential terminals, ohm

D original diameter of wire, in.

l distance between potential terminals, in.

σ Stefan-Boltzmann constant (3.51×10^{-12} watts/in.^{2} ($^\circ$R)^4)

T absolute temperature of wire, $^\circ$R

T_0 absolute temperature of tank wall, $^\circ$R

This method of effective-emittance determination is limited by possible changes in the condition of the wire being tested. Heating in a vacuum tends to volatilize the coating of exhaust residue in some cases so that data must be taken quickly to avoid changing the wire surface condition. Since the time required for the wire to reach equilibrium with respect to heat storage and radiation may be large, some compromise must be made between accuracy and reproducibility. Clean wires were the most stable in this respect, while wires which had exhaust-gas deposits varied in stability depending on the amount of deposit which volatilized during the effective-emittance check.

APPENDIX B

COMPUTATION OF EMITTANCE FROM RADIATION ERROR OF THERMOCOUPLES IN GAS STREAMS

An estimation of the effective emittance of the test wires was made by computing radiation errors for the test thermocouples and for a reference thermocouple whose effective emittance was known and which had the same conduction and recovery corrections as the test thermocouples. This evaluation was based on the analysis presented in reference 10 and therefore only the method of application is presented herein. 3050

The reference thermocouple was a conventional bare-wire, crossflow design with a water-cooled probe support (ref. 1). The test probe, also with a water-cooled configuration, was constructed to expose up to three test wires to the exhaust stream at one time. Figure 2 shows the arrangement of the reference and test probes with two test wires in the test probe. These wires were of the same diameter and the same exposed length as the reference-probe wires. In order to further insure negligible differences in conduction error and recovery characteristics for both probes, the length-to-diameter ratio of the exposed thermocouple wire was high (50), and the tests were conducted at low subsonic Mach numbers, on the order of 0.3 or below, to minimize recovery errors.

In the controlled tunnel tests with apparatus B and C, the test wires were exposed continuously to the exhaust gases, while the reference thermocouple was inserted periodically to take measurements of both absolute temperature and of differential temperature between the reference and test thermocouples. Since the reference thermocouple was kept clean by leaving it retracted except for brief periodic reading intervals, its effective-emittance change was small when compared with the effective-emittance change of the test thermocouples. The initial effective emittance and the final effective emittance of the reference thermocouple were determined in the emittance apparatus, and a linear time against effective emittance relation was assumed. The radiation error for the reference thermocouple was then computed (according to ref. 10) from measurements of Mach number, static pressure, indicated thermocouple temperature, wall temperature, wire diameter, and interpolated value of effective emittance. Total temperature was evaluated by adding the conduction, recovery, and radiation corrections to the reference-thermocouple indicated temperature. The thermoelectric-power correction in these tests was negligible (approximately 4° F maximum). Since the recovery and conduction characteristics were the same for both probes, these factors cancelled when the difference in total-temperature measurements given by the two probes was determined. The radiation error for the test probe is then seen to be equal to the computed radiation error

of the reference probe plus the measured temperature differential between the reference and test thermocouples. The effective emittance for the test wire can then be calculated by applying the formula

$$\frac{\text{Radiation error of test wire}}{\text{Radiation error of reference wire}} = \frac{\varepsilon_{test}}{\varepsilon_{ref}}\left(\frac{T_{test}}{T_{ref}}\right)^4$$

By using this technique, the rate of change of effective emittance with exposure time was determined. The final effective emittance as obtained by this method can be checked by the emittance measuring apparatus (appendix A). In addition to the tests reported in the body of this paper, a special series of tests was conducted to compare the final effective emittances over a range of temperatures as obtained by these two methods. A number of test thermocouples were exposed to the exhaust gas of 72-octane fuel in apparatus C under conditions of uneven burning and high local fuel-air ratios which promoted extreme conditions of exhaust deposit. At the end of 16 hours, the test thermocouples were well coated with exhaust residue (fig. 8(d)). Measurements relative to a reference probe were then taken at six temperatures between 1700° and 2600° F, and the effective emittances were computed according to the procedure just presented. The effective emittances were also experimentally determined in the emittance apparatus through a range of temperatures from 980° to 1950° F. Higher temperatures were not used because of the danger of appreciably altering the wire surface through volatilization. The results indicated that the values as obtained by the two methods agreed within 0.03.

3050

CT-3

REFERENCES

1. Scadron, Marvin D., Warshawsky, Isidore, and Gettelman, Clarence C.: Thermocouples for Jet-Engine Gas Temperature Measurement. Proc. Instr. Soc. Am., Paper No. 52-12-3, vol. 7, 1952, pp. 142-148.

2. The Liquid Steel Temperature Sub-Committee: A Symposium on the Contamination of Platinum Thermocouples. Jour. Iron and Steel Inst., vol. 155, Feb. 1947, pp. 213-234.

3. McQuillan, M. K.: Some Observations on the Behaviour of Platinum/Platinum-Rhodium Thermocouples at High Temperatures. Jour. Sci. Instr., vol. 26, Oct. 1949, pp. 329-331.

4. Worthing, A. G.: Temperature Radiation Emissivities and Emittances. Temperature - Its Measurement and Control in Science and Industry. Reinhold Pub. Corp., 1941, pp. 1164-1187.

5. Sectional Committee on Letter Symbols and Abbreviations for Science and Industry: American Standard - Letter Symbols for Heat and Thermodynamics Including Heat Flow. ASA Z10.4, pub. by A.S.M.E., 1943, p. 17.

6. Gerrish, Harold C., and Meem, J. Lawrence, Jr.: The Measurement of Fuel-Air Ratio by Analysis of the Oxidized Exhaust Gas. NACA Rep. 757, 1943. (Supersedes NACA WR E-128.)

7. Davisson, C., and Weeks, J. R., Jr.: The Relation Between the Total Thermal Emissive Power of a Metal and Its Electrical Resistivity. Jour. Optical Soc. Am. and Rev. Sci. Instr., vol. 8, no. 5, May 1924, pp. 581-605.

8. Sub-Committee on Thermocouple and Extension Wire: Tentative Recommended Practice - Thermocouples and Thermocouple Extension Wires - Terminology - Limits of Error - Wire Sizes. ISA RP1.3, Instr. Soc. Am., Aug. 22, 1952.

9. Bottomley, J. T.: On the Permanent Temperature of Conductors through which an Electric Current is passing, and on Surface Conductivity, or Emissivity. Proc. Roy. Soc., vol. 37, 1884, pp. 177-189.

10. Scadron, Marvin D., and Warshawsky, Isidore: Experimental Determination of Time Constants and Nusselt Numbers for Bare-Wire Thermocouples in High-Velocity Air Streams and Analytic Approximation of Conduction and Radiation Errors. NACA TN 2599, 1952.

3050

3050

CT-3 back

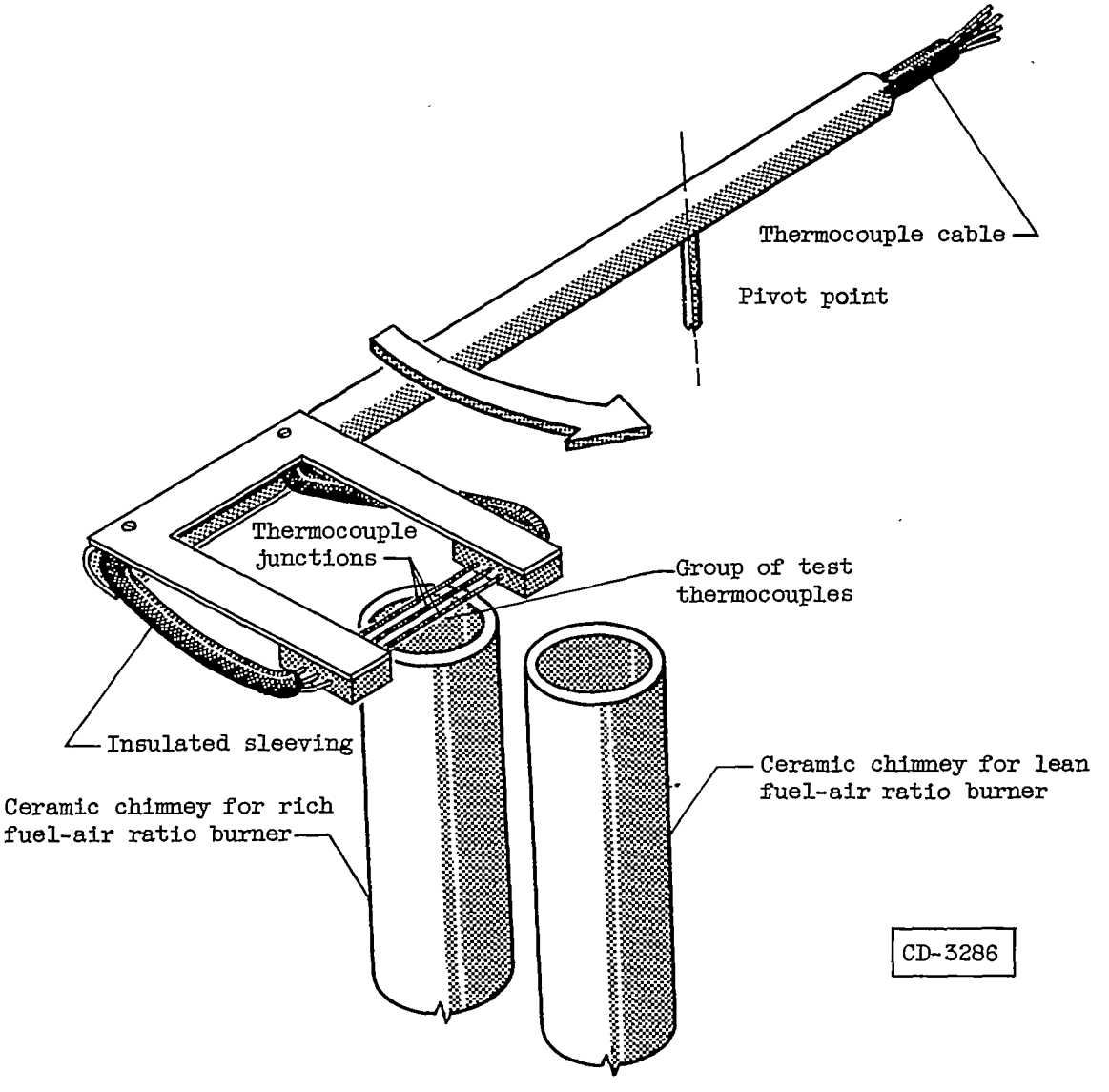

Figure 1. - Meker burner cycling (apparatus A).

3050

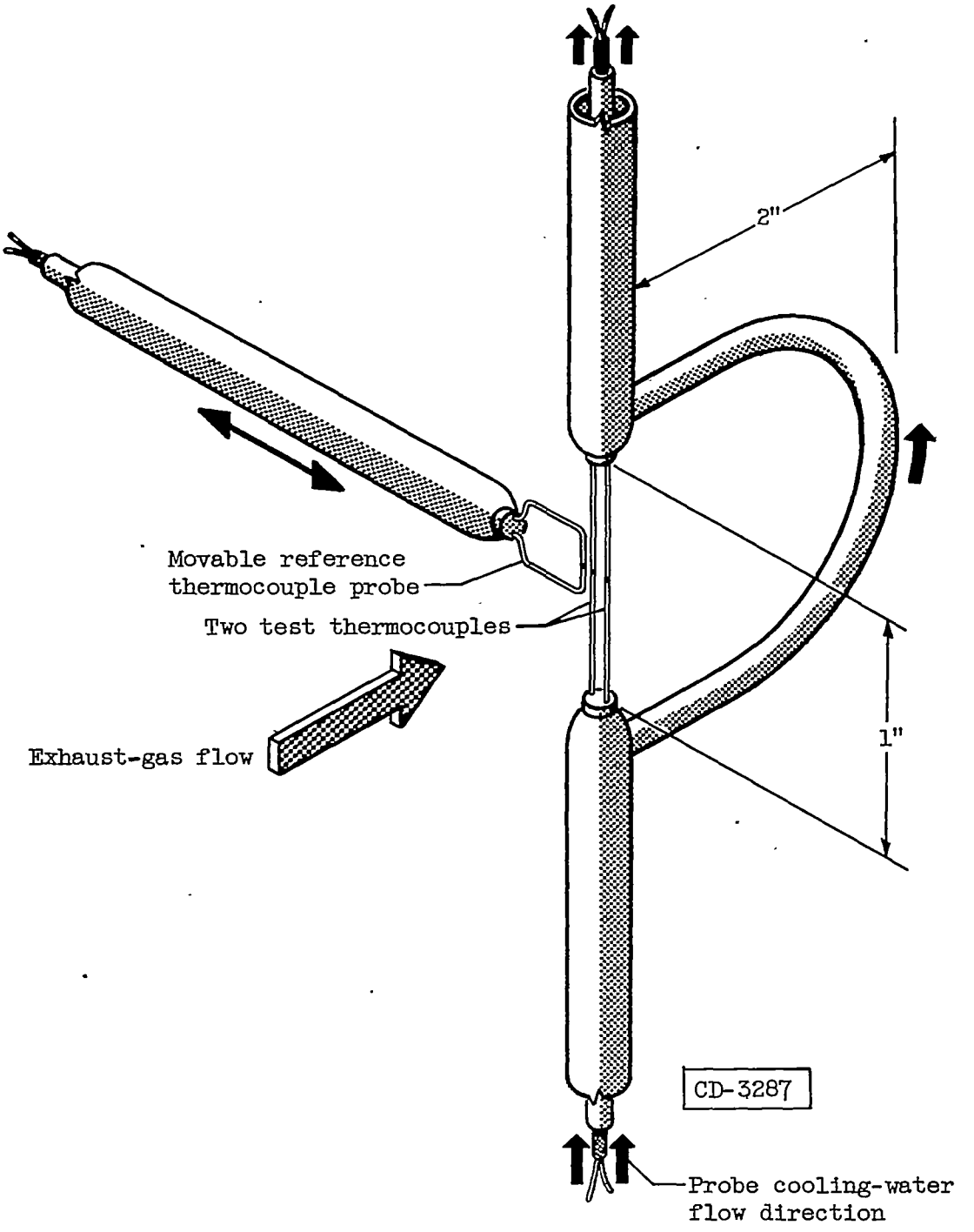

Figure 2. - Probe configurations used in tunnel tests.

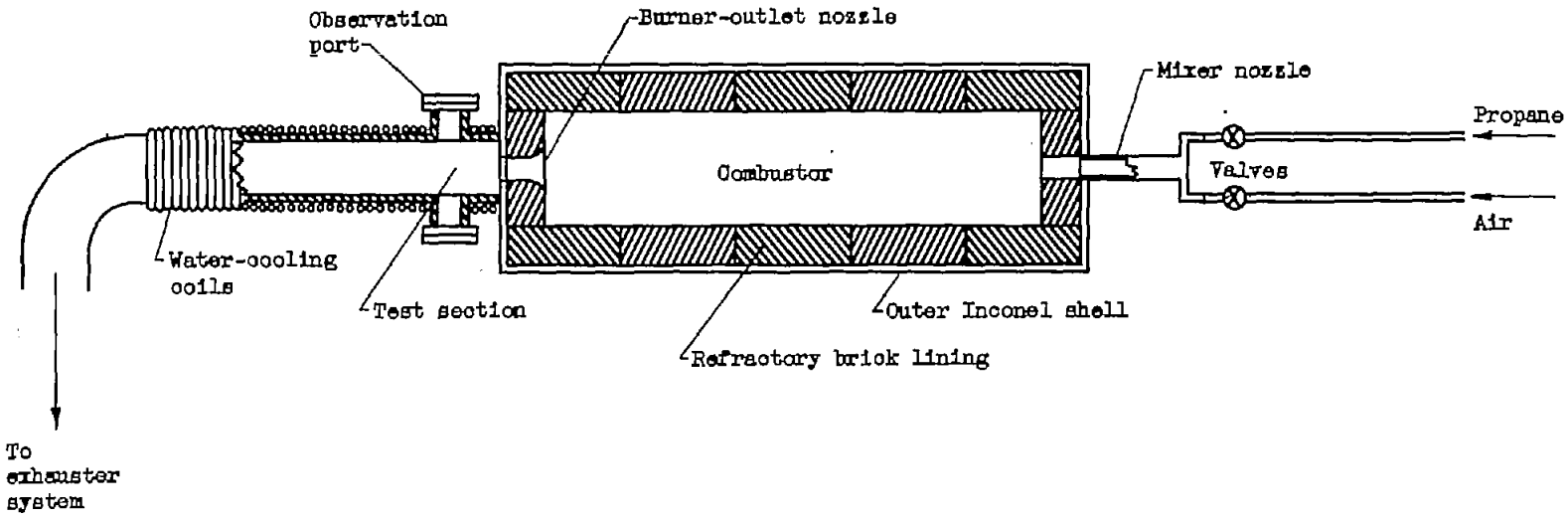

Figure 3. - High-temperature tunnel with brick-lined combustor (apparatus B).

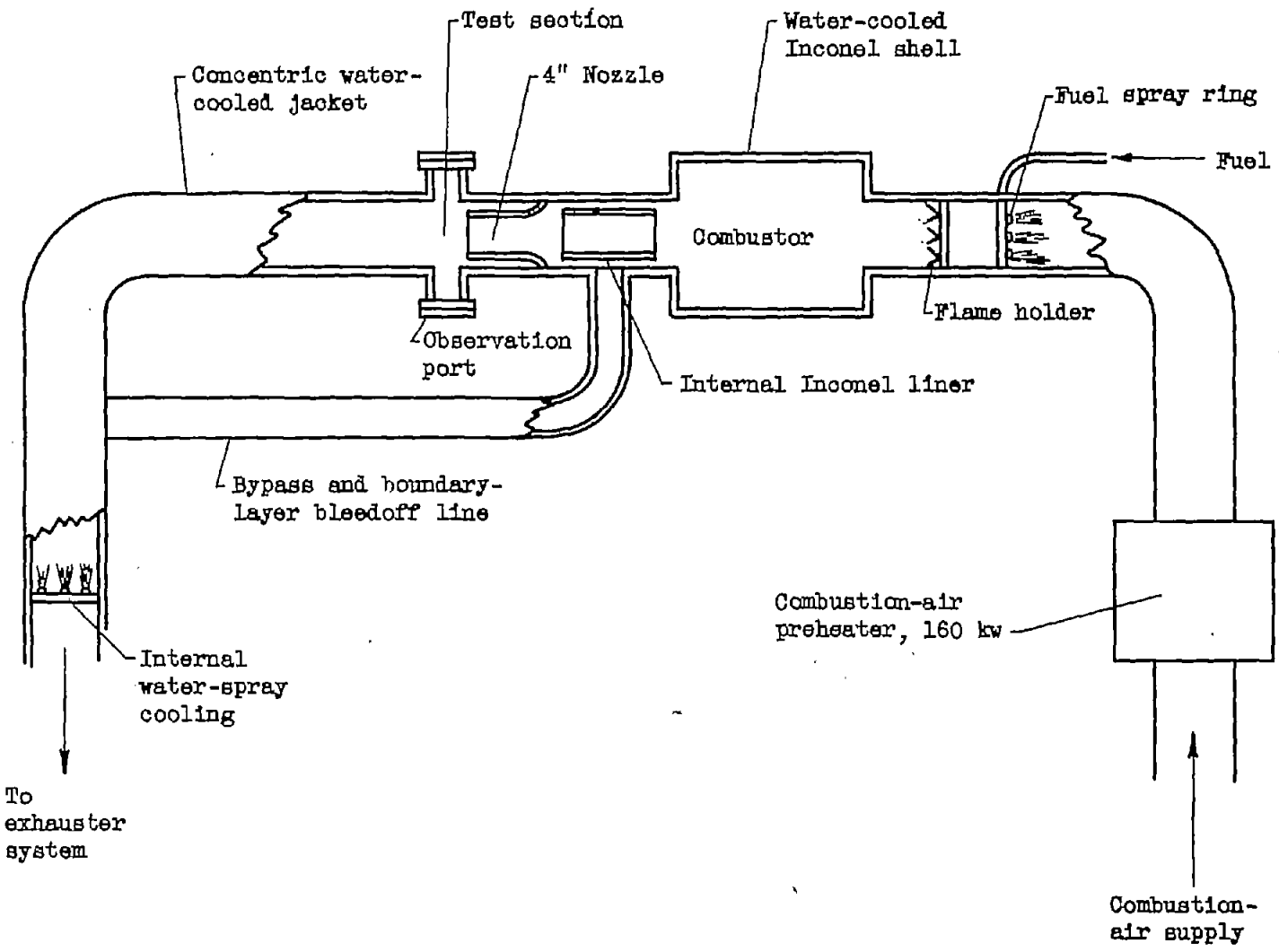

Figure 4. - High-temperature tunnel with Inconel combustor section (apparatus C).

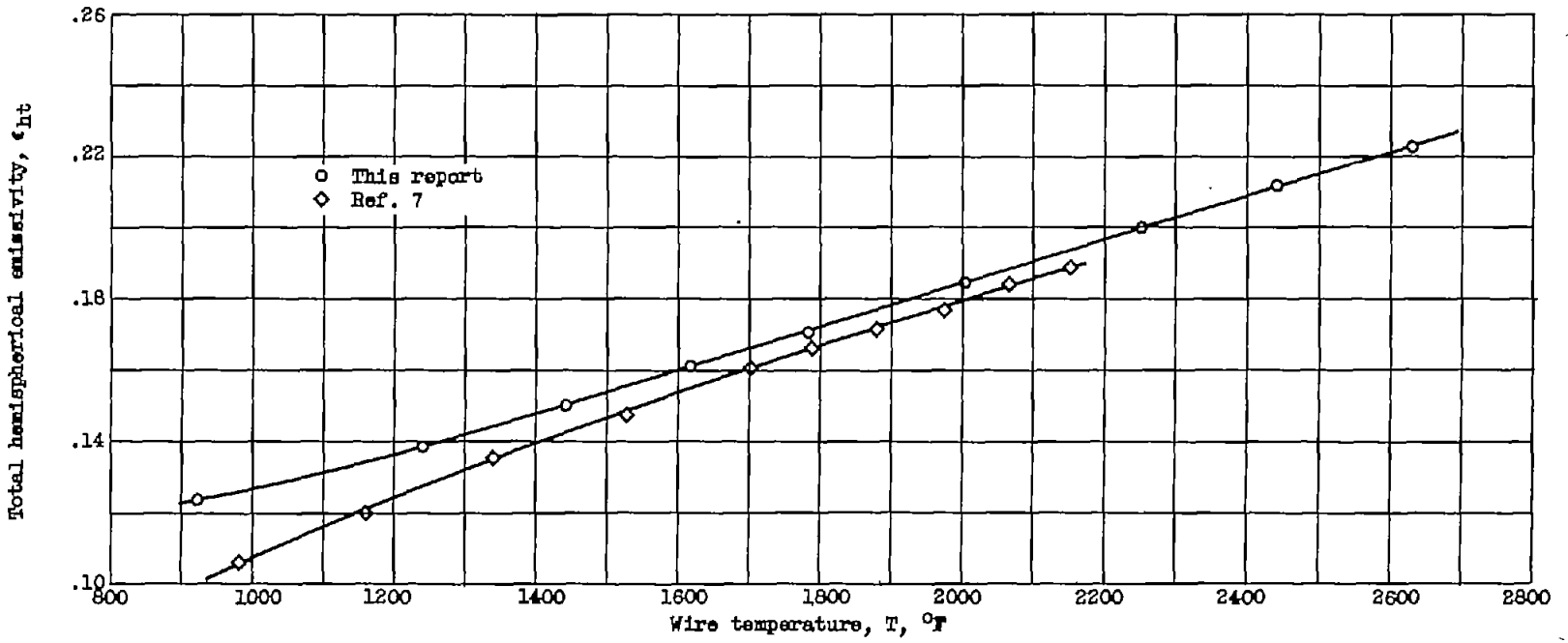

Figure 5. - Total hemispherical emissivity of clean platinum wire.

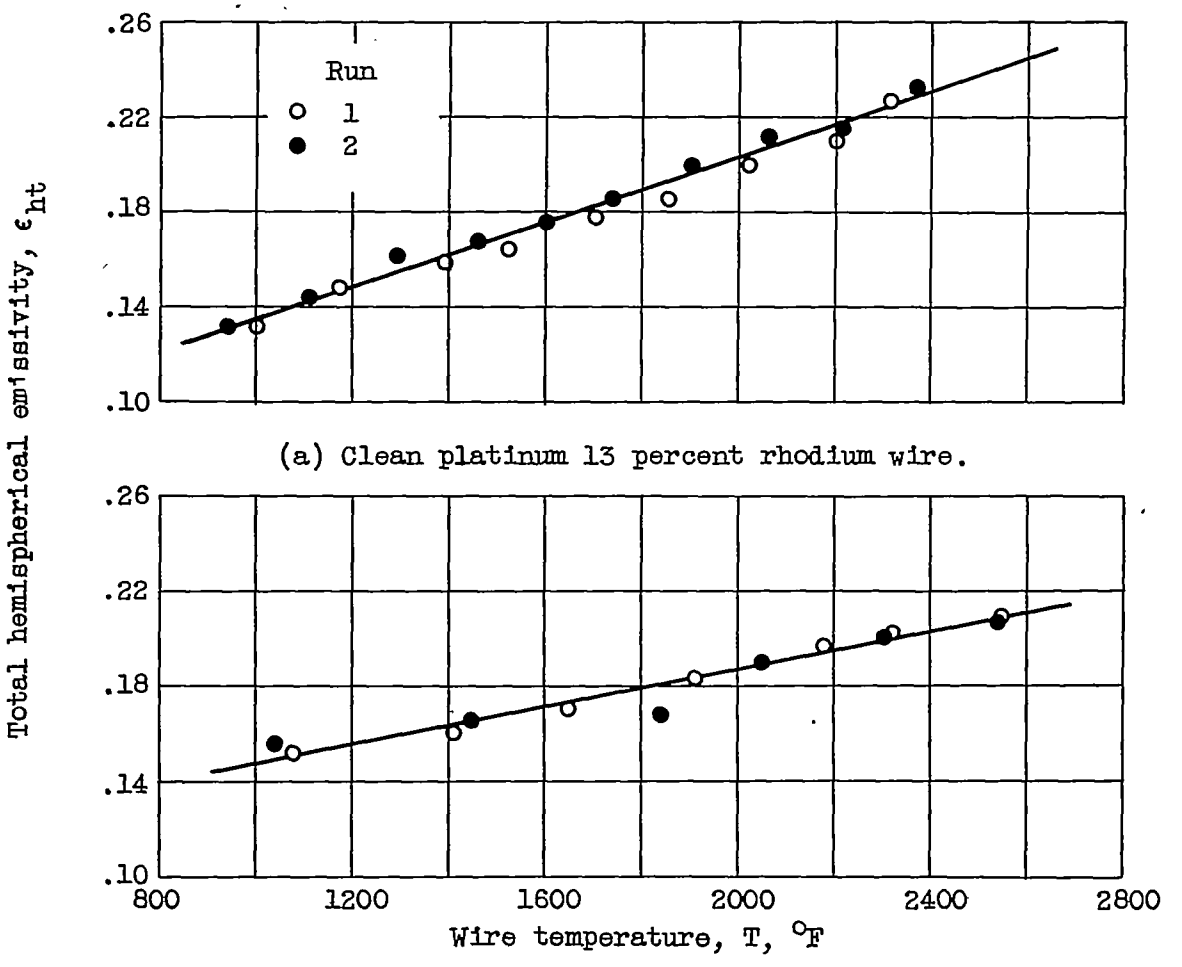

(a) Clean platinum 13 percent rhodium wire.

(b) Clean thermocouple with equal lengths of platinum and platinum 13 percent rhodium.

Figure 6. - Total hemispherical emissivity.

3050

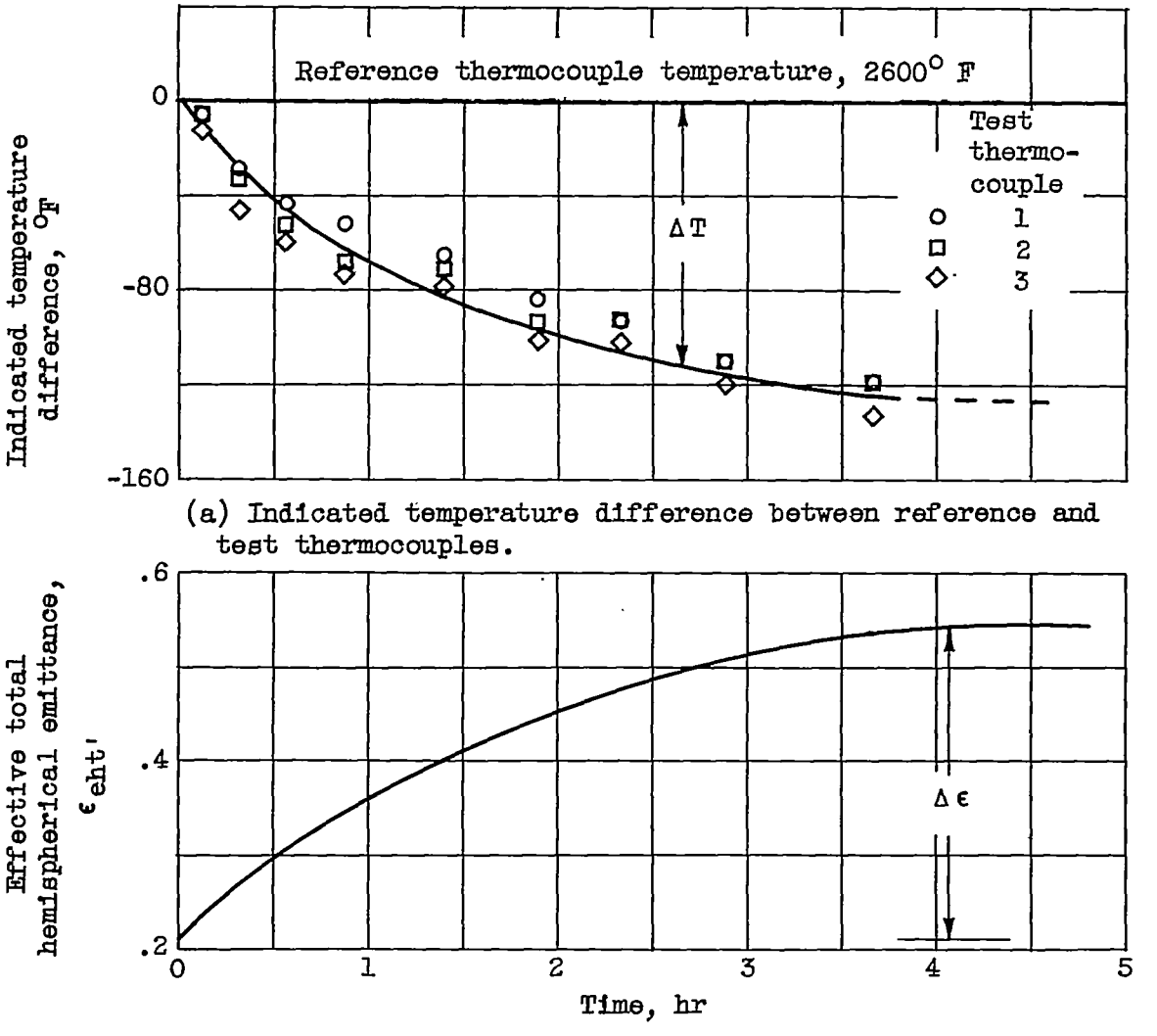

(a) Indicated temperature difference between reference and test thermocouples.

(b) Emittance increase required to account for observed temperature change in (a).

Figure 7. - Temperature deviation and emittance change with time in apparatus B. Over-all fuel-air ratio, 0.08; temperature, 2600° F.

(a) Before exposure of new wire to exhaust-gas stream.

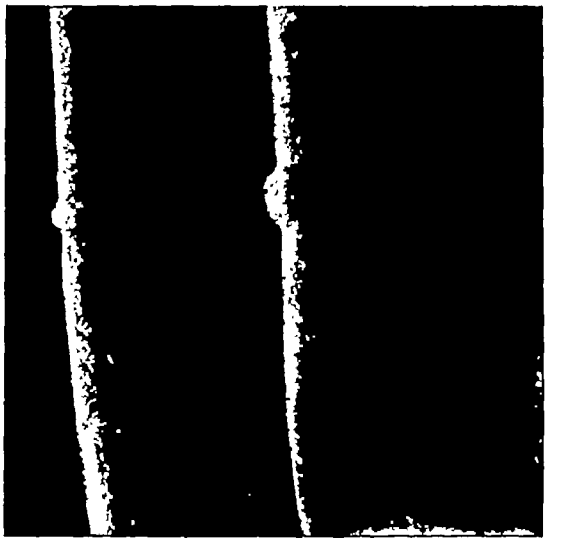

(b) After exposure of wires to exhaust-gas stream from apparatus B. Beads on wires are resistance-welded junctions.

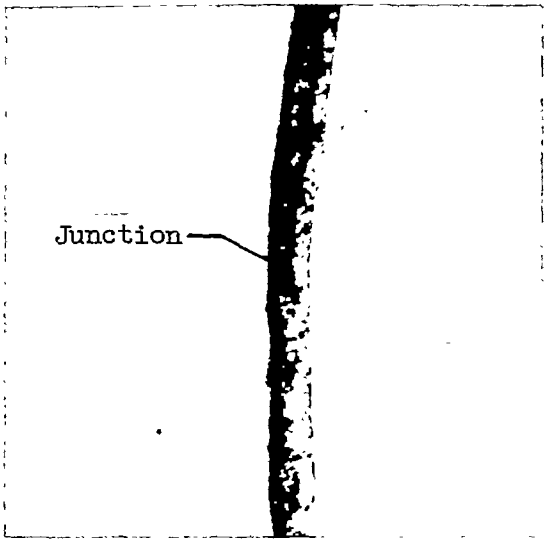

(c) Exhaust residue on upstream side after exposure of wire to exhaust-gas stream from apparatus C.

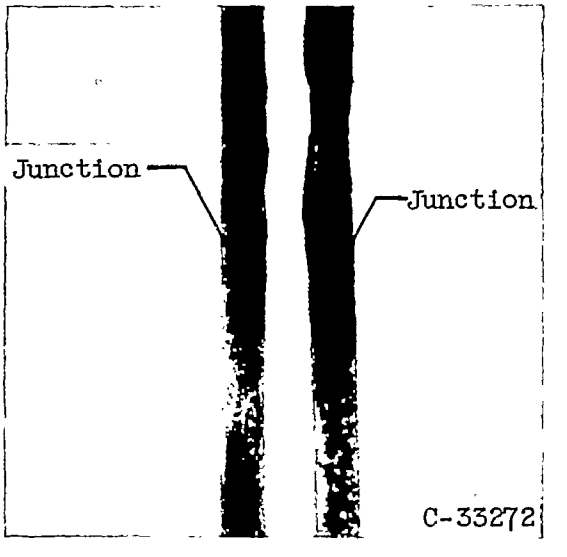

(d) Upstream side of wires after exposure to exhaust-gas stream from apparatus C. (One thermocouple was slightly narrowed during fabrication.)

Figure 8. - Photograph of 0.020-inch-diameter platinum 13 percent rhodium - platinum thermocouple wires before and after exposure to exhaust gases.

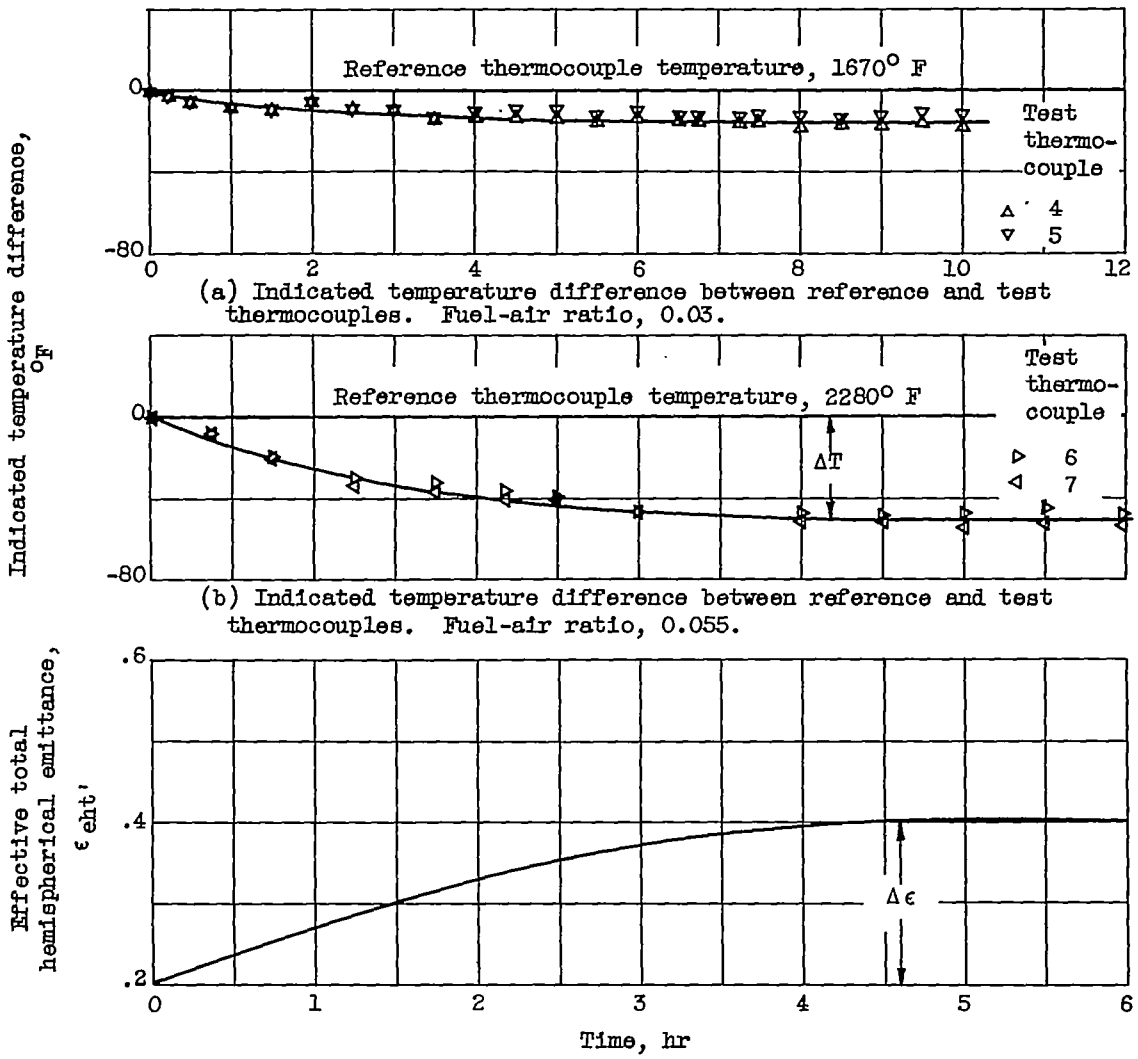

(a) Indicated temperature difference between reference and test thermocouples. Fuel-air ratio, 0.03.

(b) Indicated temperature difference between reference and test thermocouples. Fuel-air ratio, 0.055.

(c) Emittance increase required to account for observed temperature change in (b).

Figure 9. - Indicated temperature change with time. Apparatus C.

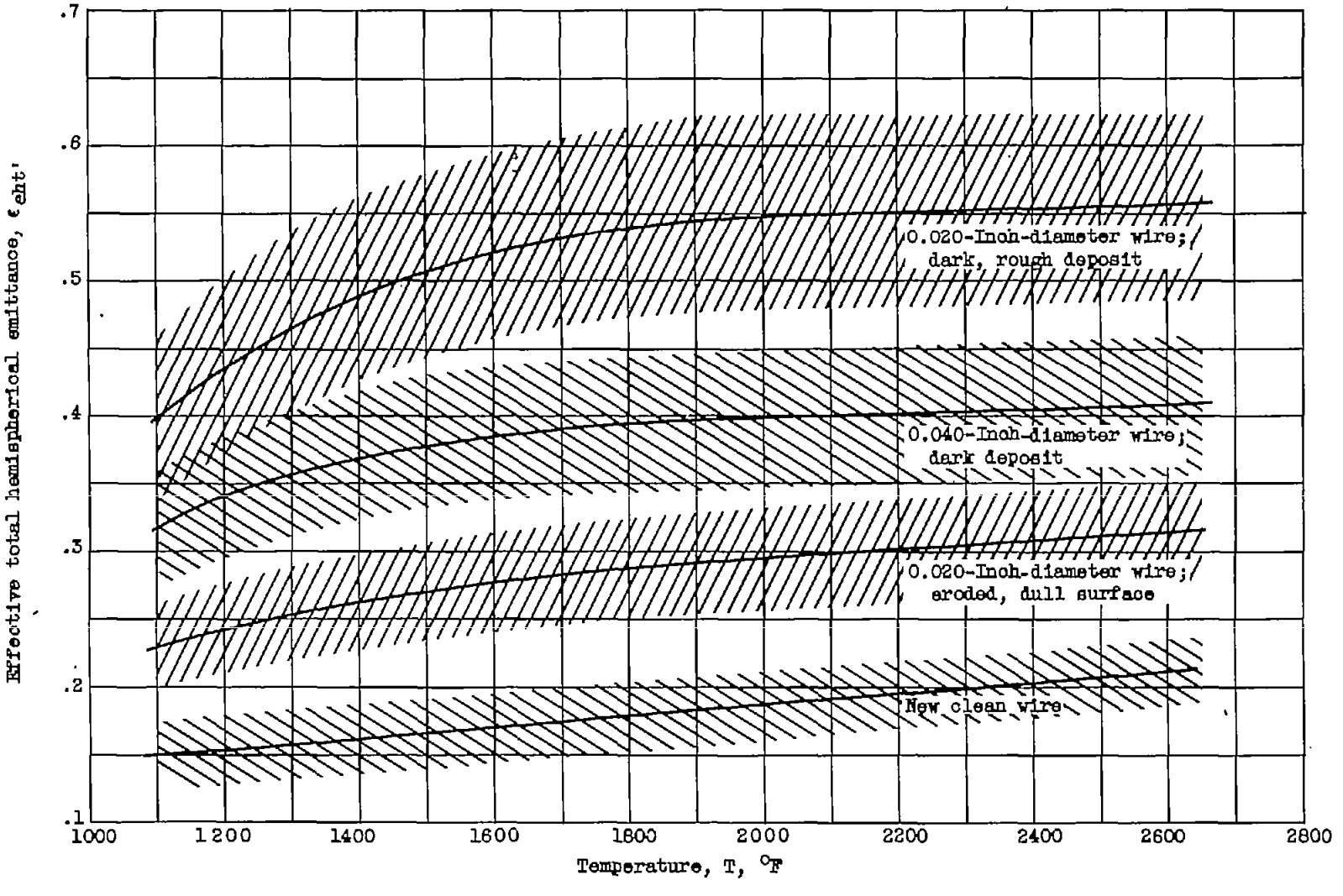

Figure 10. - Correlation between effective emittance and appearance of thermocouple wires. Crosshatched areas represent regions of probable variations in emittance.

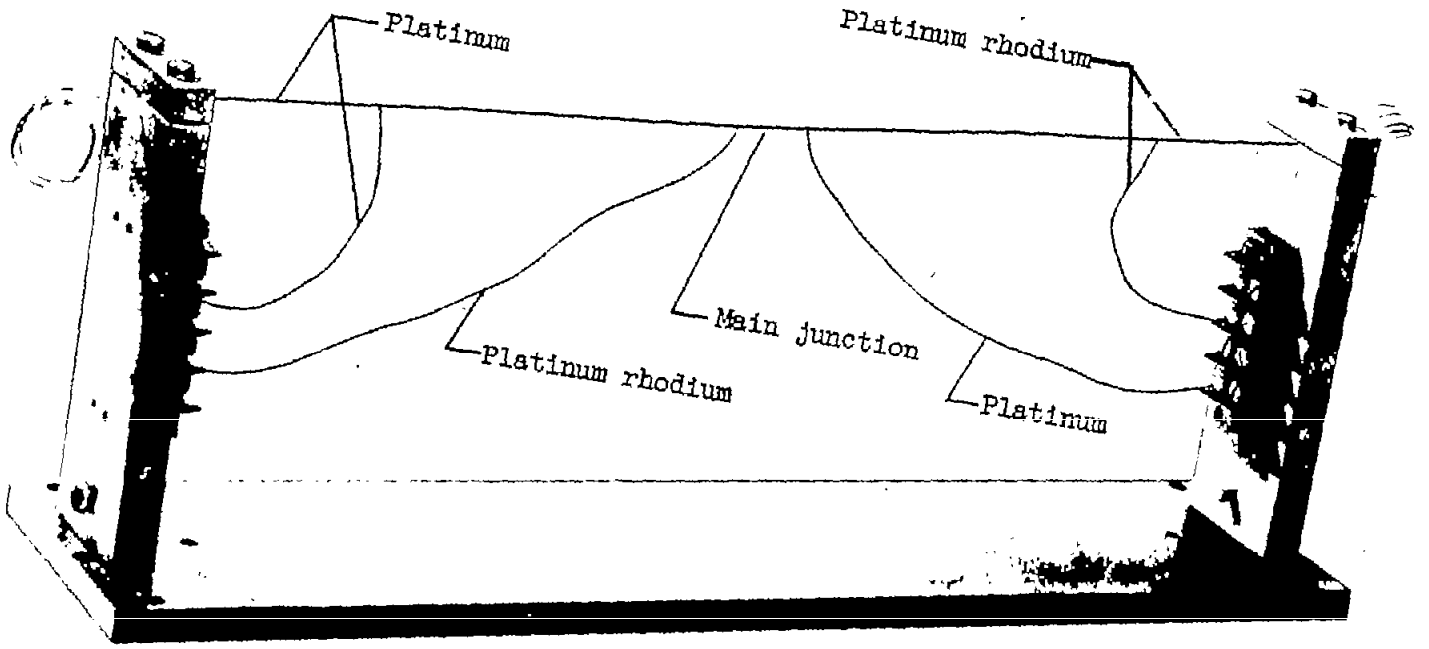

Figure 11. - Wiring assembly for emittance apparatus.

C-33271

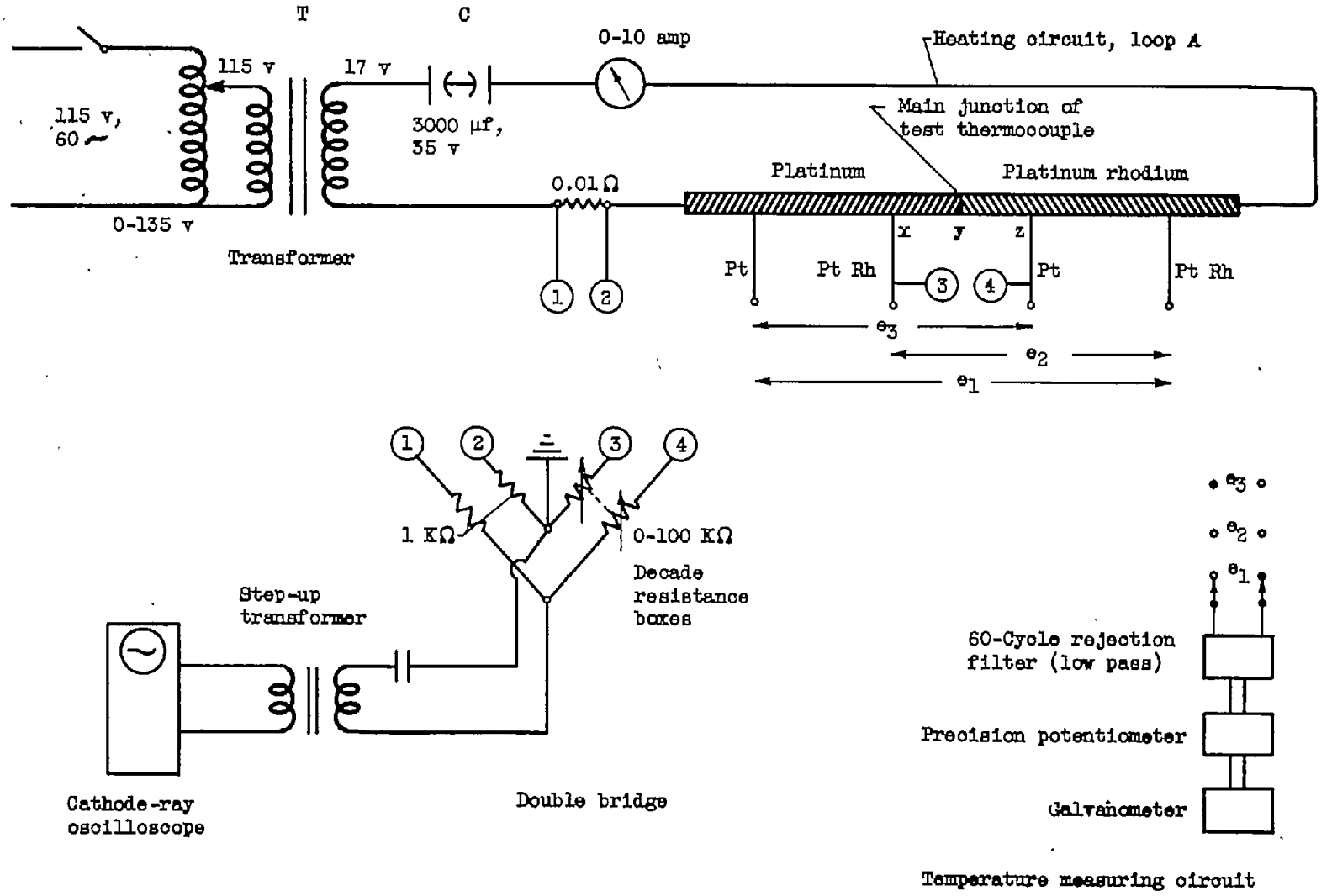

Figure 12. - Emittance apparatus circuit.

NACA-Langley - 8-12-54 - 1000