1265

8029

TECH LIBRARY KAFB, NM

0144498

# NATIONAL ADVISORY COMMITTEE FOR AERONAUTICS

TECHNICAL NOTE

No. 1265

## BOUNDARY-INDUCED UPWASH FOR YAWED AND SWEPT-BACK WINGS IN CLOSED CIRCULAR WIND TUNNELS

By Bertram J. Eisenstadt

Langley Memorial Aeronautical Laboratory
Langley Field, Va.

Washington
May 1947

AFMDC
TECHNICAL LIBRARY
AFL 2811

TECH LIBRARY KAFB, NM
0144498

NATIONAL ADVISORY COMMITTEE FOR AERONAUTICS

TECHNICAL NOTE NO. 1265

# BOUNDARY-INDUCED UPWASH FOR YAWED AND SWEPT-BACK WINGS IN CLOSED CIRCULAR WIND TUNNELS

By Bertram J. Eisenstadt

## SUMMARY

The tunnel-induced velocities for yawed and swept-back airfoils in a closed circular wind tunnel were determined. The calculations were performed for elemental horseshoe vortices having one tip of the bound vortex on the tunnel axis for a range of yaw angles and bound-vortex lengths. From these results, the correction for complete yawed and swept-back wings of arbitrary span loading may be obtained by a superposition of solutions.

Charts and tables of the induced velocity normal to the plane of the tunnel axis and bound vortex are presented. In addition, formulas are given for obtaining the tunnel-induced velocity normal to any other plane containing the tunnel axis. These velocities are needed for swept-back wings at high angles of attack, where the tunnel axis and the two halves of the wing do not all lie in the same plane. Curves are presented for converting the tunnel-induced velocities into corrections to the geometric angle of attack of the wing.

For the case of the unyawed wing, comparison of the present results for the induced velocities along the tunnel axis with those obtained by Irmgard Lotz and by J. M. Burgers shows agreement with Burgers' results. Since the method of Lotz was used in the present study, it would appear that her computations were incorrect.

A proof of the validity of the method presented by Lotz is given in the appendix.

## INTRODUCTION

Wind-tunnel testing of yawed and swept airfoils has considerably increased with the development of maneuvers involving flight at large angles of sideslip and with the development of interest in the use of swept wings for transonic, supersonic, and

tailless aircraft. The corresponding tunnel corrections have been difficult to derive, inasmuch as the problem is not reducible, as with a straight unyawed airfoil, to that of a two-dimensional potential flow. Rectangular tunnels, however, may be treated by the method of images, as was done in reference 1 in which corrections for 7- by 10-foot closed tunnels are given. The boundary conditions for tunnels of circular cross-section cannot be satisfied by the use of images alone. The purpose of the present study is to develop a method for treating this case of the closed circular tunnel and to evaluate the corrections for a range of conditions.

The method used follows essentially that of reference 2 in which the tunnel-induced potential is broken up into two parts - that of a reflection vortex system which makes the tunnel a streamline far from the airfoil, and a residual potential, whose effect is zero at infinity. In order that the results be readily applicable to both yawed and swept airfoils, the bound vortex of the elemental horseshoe vortex simulating the wing was assumed to have one tip at the tunnel axis, so that, for example, a swept-back wing with fairly uniform loading would be represented by two such swept-back vortices, and a yawed wing with uniform loading by one swept-back and one swept-forward vortex. Since the bound vortices meet the tunnel axis, the results are applicable only to wings with lifting lines that approximately fulfill this condition.

Computations were made for a range of sweep angles between $-45^{\circ}$ and $45^{\circ}$, and a range of spans up to 0.9 of the tunnel radius, so that results for arbitrary loadings may be found by superposition. The induced velocities normal to the plane of the horseshoe vortex were computed for a range of locations in this plane. In addition, data are given by which the induced velocity normal to any plane containing the tunnel axis may be computed. These velocities are shown to be of interest for highly swept wings at large angles of attack.

No attempt has been made to describe the methods for converting the induced velocities to corrections to the measured aerodynamic parameters, inasmuch as such methods are described in reference 1. Methods for adjusting the results for compressibility effects have also not been discussed, inasmuch as the basic concepts and procedures are now well known.

## SYMBOLS

$\psi$ angle of yaw or sweepback of bound vortex

$\psi_o$ angle of yaw or sweepback of bound vortex in horizontal plane

| | |
|---|---|
| $s$ | length of bound vortex |
| $r_o$ | tunnel radius |
| $\sigma$ | $s/r_o$ |
| $x, y, z$ | rectangular coordinates (see fig. 1) |
| $x, r, \theta$ | cylindrical coordinates (see fig. 1) |
| $\xi, \eta, \zeta$ | $x/r_o$, $y/r_o$, $z/r_o$ |
| $\rho$ | $r/r_o$ |
| $\beta$ | variable of integration |
| $\Phi_0$ | potential of elemental horseshoe vortex |
| | tunnel induced potential |
| $\Phi_1$ | potential of reflection vortices |
| $\Phi_2$ | residual potential, $\Phi - \Phi_1$ |
| $\Gamma$ | circulation of elemental horseshoe vortex |
| $g_m$ | $m^{th}$ Fourier coefficient of $-\frac{4\pi r_o}{\Gamma}\frac{\partial(\Phi_0 + \Phi_1)}{\partial r}\Big\vert_{r=r_o}$ |
| $w_1$ | $\frac{\partial \Phi_1}{\partial z}\Big\vert_{z=0}$ |
| $w_2$ | $\frac{\partial \Phi_2}{\partial z}\Big\vert_{z=0}$ |
| $w$ | $w_1 + w_2 = \frac{\partial \Phi}{\partial z}\Big\vert_{z=0}$ |
| $\alpha$ | angle of attack about fixed horizontal axis |
| $\bar{\alpha}$ | angle between plane of airfoil and plane of horseshoe vortex |
| $\phi$ | twice angle between plane of horseshoe vortex and horizontal plane |

$$w_{1_\phi} = -\frac{1}{r_o\rho}\frac{\partial\Phi_1}{\partial\theta}\bigg|_{\theta=\pi+\phi}$$

$$w_{2_\phi} = -\frac{1}{r_o\rho}\frac{\partial\Phi_2}{\partial\theta}\bigg|_{\theta=\pi+\phi}$$

$$w_\phi = w_{1_\phi} + w_{2_\phi} = -\frac{1}{r_o\rho}\frac{\partial\Phi}{\partial\theta}\bigg|_{\theta=\pi+\phi}$$

$C_L$ lift coefficient of wing

$L$ lift of wing

$S$ wing area

## ANALYSIS

The elemental horseshoe vortex is illustrated in figure 1. It consists of a bound vortex of constant strength, of length $s$, and sweepback angle $\psi$, with one tip on the tunnel axis and two trailing vortices running in the downstream direction from the tips. The two coordinate systems used herein (fig. 1) are related as follows:

$$x = x$$

$$y = r \cos \theta$$

$$z = r \sin \theta$$

and are disposed so that the x-axis coincides with the tunnel axis, and the xy-plane is the plane of the horseshoe vortex.

Let $\Phi_o(x, r, \theta)$ be the potential of the elemental horseshoe vortex. The velocity normal to the tunnel wall, $r = r_o$, induced by this vortex is

$$\frac{\partial\Phi_o(x, r, \theta)}{\partial r}\bigg|_{r=r_o}$$

The problem consists of finding a function $\Phi(x, r, \theta)$ which is harmonic inside the cylinder $r = r_o$ and for which

$$\left.\frac{\partial(\Phi_0 + \Phi)}{\partial r}\right|_{r=r_o} = 0 \tag{1}$$

The function $\Phi$ is then the potential of the additional flow due to the tunnel walls.

The particular external reflection vortex system chosen to make the tunnel a streamline at infinity is shown in figure 1. It consists of two semi-infinite vortex lines, one in the direction of positive $x$, and the other in the direction of positive $y$, joined at the point $(x, y, z) = \left(0, \frac{r_c^2}{s \cos \psi}, 0\right)$. The potential of this vortex system is designated $\Phi_1$.

The residual potential which makes the tunnel a streamline everywhere is designated $\Phi_2$. Then,

$$\Phi = \Phi_1 + \Phi_2$$

and by equation (1)

$$\left.\frac{\partial\Phi_2}{\partial r}\right|_{r=r_o} = -\left.\frac{\partial(\Phi_0 + \Phi_1)}{\partial r}\right|_{r=r_o} \tag{2}$$

This potential $\Phi_2$ is harmonic for $r < r_o$, because it is the difference of two harmonic functions; moreover, the derivative of $\Phi_2$ normal to the tunnel wall approaches zero as $|x|$ approaches infinity The function is sought in the form of an infinite series of harmonic functions of the type $[X(x)\ R(r)\ \Theta(\theta)]$. If for a bounded harmonic function of period $2\pi$ in $\theta$, and of arbitrary period $2l$ in $x$, such a representation exists, it must take the following form (reference 3, chapter 1):

$$\Phi_2 = -\frac{\Gamma}{4\pi}\sum_m\sum_n\left\{\left[\sin m\theta\left(A_{mn}\cos\frac{\pi nx}{l} + B_{mn}\sin\frac{\pi nx}{l}\right)\right.\right.$$

$$\left.\left. + \cos m\theta\left(C_{mn}\cos\frac{\pi nx}{l} + D_{mn}\sin\frac{\pi nx}{l}\right)\right]J_m\left(\frac{i\pi n}{l}r\right)\right\}$$

where $J_m$ is the $m^{th}$ order Bessel function of the first kind, and the A's, B's, C's, and D's are constants to be determined. Subsequently $l$ will be made to approach infinity.

It is convenient to introduce the nondimensional variables:

$$\begin{aligned}
\xi &= \frac{x}{r_o} \\
\eta &= \frac{y}{r_o} \\
\zeta &= \frac{z}{r_o} \\
\rho &= \frac{r}{r_o} \\
\lambda &= \frac{l}{r_o} \\
\sigma &= \frac{s}{r_o}
\end{aligned} \tag{3}$$

The series for $\Phi_2$ then becomes

$$\Phi_2 = -\frac{\Gamma}{4\pi}\sum_m\sum_n\left\{\left[\sin m\theta\left(A_{mn}\cos\frac{\pi n\xi}{\lambda} + B_{mn}\sin\frac{\pi n\xi}{\lambda}\right)\right.\right.$$

$$\left.\left. + \cos m\theta\left(C_{mn}\cos\frac{\pi n\xi}{\lambda} + D_{mn}\sin\frac{\pi n\xi}{\lambda}\right)\right]J_m\left(\frac{i\pi n}{\lambda}\rho\right)\right\} \tag{4}$$

Since

$$\frac{\partial \Phi_2}{\partial r} = \frac{1}{r_o} \frac{\partial \Phi_2}{\partial \rho}$$

formal differentiation gives

$$\left.\frac{\partial \Phi_2}{\partial r}\right|_{r=r_o} = \frac{1}{r_o} \left.\frac{\partial \Phi_2}{\partial \rho}\right|_{\rho=1}$$

$$= -\frac{\Gamma}{4\pi r_o} \sum_m \sum_n \left\{\left[\sin m\theta \left(A_{mn} \cos \frac{\pi n \xi}{\lambda} + B_{mn} \sin \frac{\pi n \xi}{\lambda}\right)\right.\right.$$

$$\left.\left. + \cos m\theta \left(C_{mn} \cos \frac{\pi n \xi}{\lambda} + D_{mn} \sin \frac{\pi n \xi}{\lambda}\right)\right] \frac{i\pi n}{\lambda} J_m'\left(\frac{i\pi n}{\lambda}\right)\right\} \qquad (5)$$

In order to satisfy the boundary condition at the tunnel wall by equation (2) this series must be made equal to

$$-\left.\frac{\partial(\Phi_0 + \Phi_1)}{\partial r}\right|_{r=r_o}$$

This function, which is the velocity normal to the tunnel wall induced by the horseshoe and reflection vortices, is obtained by the Biot-Savart law as

$$-\frac{\partial(\Phi_0 + \Phi_1)}{\partial r}\bigg|_{r=r_0} =$$

$$-\frac{\Gamma}{4\pi r_0}\left\{\frac{\sigma \cos\psi \sin\theta}{1 - 2\sigma\cos\psi\cos\theta + \sigma^2\cos^2\psi}\left[\frac{\xi\,\sigma\cos\psi}{\sqrt{\xi^2\sigma^2\cos^2\psi + 1 - 2\sigma\cos\psi\cos\theta + \sigma^2\cos^2\psi}}\right.\right.$$

$$\left.-\frac{\xi - \sigma\sin\psi}{\sqrt{(\xi - \sigma\sin\psi)^2 + 1 - 2\sigma\cos\psi\cos\theta + \sigma^2\cos^2\psi}}\right]$$

$$-\frac{\xi\sin\theta}{\xi^2 + \sin^2\theta}\left[1 + \frac{\sigma\cos\psi\cos\theta - 1}{\sqrt{\xi^2\sigma^2\cos^2\psi + 1 - 2\sigma\cos\psi\cos\theta + \sigma^2\cos^2\psi}}\right]$$

$$-\frac{\xi\cos\psi\sin\theta}{\sin^2\theta + \xi^2\cos^2\psi - \xi\sin 2\psi\cos B + \sin^2\psi\cos^2\theta}\left[\frac{\xi\sin\psi + \cos\psi\cos\theta}{\sqrt{1 + \xi^2}}\right.$$

$$\left.\left.-\frac{\xi\sin\psi + \cos\psi\cos\theta - \sigma}{\sqrt{(\xi - \sigma\sin\psi)^2 + 1 - 2\sigma\cos\psi\cos\theta + \sigma^2\cos^2\psi}}\right]\right\} \qquad (6)$$

In order to satisfy the boundary conditions on $\Phi_2$, it is necessary to determine the constants $A_{mn}$, $B_{mn}$, $C_{mn}$, $D_{mn}$ so that equation (2) is satisfied. The first step is to expand the function $-\left.\frac{\partial(\Phi_0 + \Phi_1)}{\partial r}\right|_{r=r_0}$ in a Fourier series in $\theta$. Since this function is an odd function of $\theta$, the series contains only sine terms. Thus

$$-\left.\frac{\partial(\Phi_0 + \Phi_1)}{\partial r}\right|_{r=r_0} = -\frac{\Gamma}{4\pi r_0}\sum_m g_m(\xi) \sin m\theta \tag{7}$$

Equating coefficients in the expansions of equations (5) and (7) gives

$$g_m(\xi) = \sum_n \left(A_{mn} \cos \frac{\pi n \xi}{\lambda} + B_{mn} \sin \frac{\pi n \xi}{\lambda}\right)\frac{i\pi n}{\lambda} J_m'\left(\frac{i\pi n}{\lambda}\right)$$

$$0 = \sum_n \left(C_{mn} \cos \frac{\pi n \xi}{\lambda} + D_{mn} \sin \frac{\pi n \xi}{\lambda}\right)\frac{i\pi n}{\lambda} J_m'\left(\frac{i\pi n}{\lambda}\right)$$

These series are the Fourier expansions of the functions $g_m(\xi)$ and 0, where these functions are assumed to be of period $2\lambda$ in $\xi$. Therefore

$$A_{mn} = \frac{1}{\frac{i\pi n}{\lambda} J_m'\left(\frac{i\pi n}{\lambda}\right)} \frac{1}{\lambda}\int_{-\lambda}^{\lambda} g_m(\beta) \cos \frac{\pi n \beta}{\lambda}\, d\beta$$

$$B_{mn} = \frac{1}{\frac{i\pi n}{\lambda} J_m'\left(\frac{i\pi n}{\lambda}\right)} \frac{1}{\lambda}\int_{-\lambda}^{\lambda} g_m(\beta) \sin \frac{\pi n \beta}{\lambda}\, d\beta$$

$$C_{mn} = D_{mn} = 0.$$

Thus, from equation (4)

$$\Phi_2 = -\frac{\Gamma}{4\pi}\left\{\sum_m \sum_n \sin m\theta \frac{J_m\left(\frac{i\pi n}{\lambda}\rho\right)}{\frac{i\pi n}{\lambda} J_m'\left(\frac{i\pi n}{\lambda}\right)} \frac{1}{\lambda}\int_{-\lambda}^{\lambda} g_m(\beta) \cos\frac{\pi n}{\lambda}(\beta - \xi)\, d\beta\right\}$$

Consider formally $\lim_{\lambda \to \infty} \Phi_2$. The term $\frac{\pi n}{\lambda} = q$ is considered a continuous variable running from 0 to $\infty$; then $\frac{\pi}{\lambda} = dq$ and $\sum_{n=0}^{\infty}$ is replaced by $\int_0^{\infty}$ with respect to q, so that the aforementioned limit is

$$\Phi_2 = -\frac{\Gamma}{4\pi}\left\{\sum_m \sin m\theta \frac{1}{\pi}\int_0^{\infty} \frac{J_m(iq\rho)}{iq\, J_m'(iq)}\, dq \int_{-\infty}^{\infty} g_m(\beta) \cos q(\beta - \xi)\, d\beta\right\} \quad (8)$$

A discussion of the convergence of this series and its formal derivatives to the desired function and derivatives is given in the appendix.

The upwash velocity due to the tunnel wall at points in the plane of the airfoil is given by

$$w = \left.\frac{\partial \Phi_1}{\partial z}\right|_{z=0} + \left.\frac{\partial \Phi_2}{\partial z}\right|_{z=0}$$

The term

$$w_1 = \left.\frac{\partial \Phi_1}{\partial z}\right|_{z=0} = \frac{\Gamma}{4\pi r_o}\left\{\frac{\sigma \cos \psi}{1 - \eta \cos \psi}\left[1 + \frac{\xi\sigma \cos \psi}{\sqrt{\xi^2\sigma^2\cos^2\psi + (1 - \eta\sigma \cos \psi)^2}}\right]\right.$$

$$\left. - \frac{1}{\xi}\left[1 - \frac{1 - \eta\sigma \cos \psi}{\sqrt{\xi^2\sigma^2\cos^2\psi + (1 - \eta\sigma \cos \psi)^2}}\right]\right\} \tag{9}$$

is the velocity due to the reflection vortices. The term $w_2 = \left.\frac{\partial \Phi_2}{\partial z}\right|_{z=0}$ is obtained by differentiating the series for $\Phi_2$, term by term. The series (a Fourier series in $\theta$) is very suitably arranged for this differentiation normal to the plane of the vortex, since

$$\left.\frac{\partial \Phi_2}{\partial z}\right|_{\substack{z=0\\ y>0}} = \frac{1}{r_o\rho}\left.\frac{\partial \Phi_2}{\partial \theta}\right|_{\theta=0}$$

$$\left.\frac{\partial \Phi_2}{\partial z}\right|_{\substack{z=0\\ y<0}} = -\frac{1}{r_o\rho}\left.\frac{\partial \Phi_2}{\partial \theta}\right|_{\theta=\pi}$$

Thus, defining $\delta_m(\eta) = 1$ when $\eta > 0$ and $\delta_m(\eta) = (-1)^m$ when $\eta < 0$ gives

$$w_2 = -\frac{\Gamma}{4\pi r_o}\left[\sum_m m\,\delta_m(\eta)\,\frac{1}{\pi}\int_0^\infty \frac{J_m(i\rho q)}{i\rho q J_m'(iq)}\,dq \int_{-\infty}^{\infty} g_m(\beta)\cos q(\beta - \xi)\,d\beta\right] \tag{10}$$

The total correction to the vertical velocity in the plane of the airfoil is then

$$w = w_1 + w_2 \tag{11}$$

## METHOD OF COMPUTATION

The determination of $w_2$ is dependent upon an evaluation of the functions $g_m(\xi)$ and performance of the operations indicated in equation (10). In making these calculations, it must be remembered that the functions $g_m(\xi)$ and, therefore, the final upwash velocity due to the tunnel wall depends upon the parameters $\sigma$ and $\psi$; consequently, a different computation must be performed for each combination of these two parameters. The present computations were performed for $\sigma = 0.45$ and $0.90$ and for $\psi = 0^\circ, \pm 15^\circ, \pm 30^\circ$, and $\pm 45^\circ$. The functions $g_m(\xi)$ were calculated for these values of $\sigma$ and $\psi$ and for $m = 1, 2, 3, 4, 5$. Only the first three functions $g_m(\xi)$ were used, since $g_m(\xi)$ for higher values of $m$ were found to be too small to affect the results. The calculation of $g_m(\xi)$ required the expansion of

$$-\left.\frac{\partial(\Phi_0 + \Phi_1)}{\partial r}\right|_{r=r_0} = F(\xi,\theta)$$

in a Fourier series. For $|\xi| > 10$, this calculation could be done analytically by first expanding $F(\xi,\theta)$ in a power series in $\frac{1}{\xi}$. Terms of order $\frac{1}{\xi^4}$ and higher were ignored. In order to to obtain $g_m(\xi)$ for $|\xi| < 10$, $F(\xi,\theta)$ was computed for the desired values of $\xi$ and for $30^\circ$ intervals of $\theta$ and a numerical Fourier analysis was performed for each value of $\xi$. The integral

$$\int_{-\infty}^{\infty} g_m(\beta) \cos q(\beta - \xi)\, d\beta$$

was then evaluated by breaking $g_m(\xi)$ into two parts (fig. 2):

$$g_m(\xi) = g_m^{\,i}(\xi) + g_m^{\,ii}(\xi) \tag{12}$$

For $|\xi| \geq 10$, $g_m^{i}(\xi)$ is taken equal to $g_m(\xi)$. For $|\xi| \leq 10$, $g_m^{i}(\xi)$ is defined by the three straight lines intersecting the curve $g_m(\xi)$ at the points $\xi = -10, -\frac{10}{3}$; $\xi = -\frac{10}{3}, \frac{10}{3}$; and $\xi = \frac{10}{3}, 10$. The equations of these staight lines are also known analytically. The function $g_m^{ii}(\xi)$ is then defined by equation (12).

Since $g_m^{i}(\xi)$ is thus known either as a linear function of $\xi$ or as an inverse power series in $\frac{1}{\xi}$, the expression

$$\int_{-\infty}^{\infty} g_m^{i}(\beta) \cos q(\beta - \xi)\, d\beta$$

may be integrated to give simple functions plus integrals of the form $\int_0^{\infty} \frac{\sin q\beta}{\beta}\, d\beta$ and $\int_0^{\infty} \frac{\cos q\beta}{\beta}\, d\beta$. These latter integrals are tabulated in reference 4. Each of the separate loops of $g_m^{ii}(\beta)$ was expanded in a Fourier series by numerical methods, and the integral

$$\int_{-\infty}^{\infty} g_m^{ii}(\beta) \cos q(\beta - \xi)\, d\beta$$

was then obtained analytically. The integral

$$\int_{-\infty}^{\infty} g_m(\beta) \cos q(\beta - \xi)\, d\beta$$

was then finally obtained in the form

$$2 \sin q\xi l_m(q) + 2 \cos q\xi k_m(q)$$

The functions $l_m(q)$ and $k_m(q)$ have been given in table I for values of $q$ running from 0 to $2\pi$ in steps of $0.05\pi$.. Integration with respect to $q$ over this range was enough to ensure essentially complete convergence to their limiting values of all the integrals involving $q$. The functions $\frac{J_m(iq\rho)}{i\rho q J_m'(iq)}$ were obtained, for these same values of $q$ and various values of $\rho$, by use of the tables of reference 4 and the relation between the derivatives of Bessel functions and the functions themselves (reference 5). These results are presented in table II. The product

$$2\frac{J_m(i\rho q)}{i\rho q J_m'(iq)}\left[\sin q\xi l_m(q) + \cos q\xi k_m(q)\right]$$

was determined for various values of the position parameters $\rho$ and $\xi$ and of the wing parameters $\sigma$ and $\psi$. The final integration with respect to $q$ was performed numerically by use of Weddle's formula (reference 6).

The functions

$$\frac{m}{\pi}\int_0^\infty \frac{J_m(i\rho q)}{i\rho q J_m'(iq)}\,dq\int_{-\infty}^{\infty} \varepsilon_m(\beta)\cos q(\beta - \xi)\,d\beta$$

obtained as described are presented in table III. The velocity correction $w_2$ is then obtained by summing these functions as indicated in equation (10); the velocity correction $w_1$ is computed by use of equation (9), and the total tunnel induced velocity $w$ is thus obtained.

An additional computation was performed to find the tunnel-wall corrections for the limiting case of a wing with zero span but with finite lift. The functions $\varepsilon_m(\xi)$ simplified so that the integral with respect to $\beta$ reduced to an expression involving simple functions and the tabulated Bessel functions, $K_0$ and $K_1$ (reference 3). The second integration was then performed in the same way.

## RESULTS AND DISCUSSION

The velocities $w$ normal to the xy-plane have been converted to the nondimensional form $\frac{4\pi r_o w}{\Gamma\sigma \cos\psi}$. This function is presented for different values of the position and wing parameters in figures 3 to 7 and table IV. The values given for $\sigma = 0.25$ and $\sigma = 0.7$ were obtained by a numerical interpolation. The reciprocals of the upwash velocities were used in this interpolation, since $1/w$ tends to vary linearly with $\sigma$, as is shown by the equation

$$\left[\frac{4\pi r_o w}{\Gamma\sigma \cos\psi}\right] = \frac{1}{1 - \eta\sigma}$$

for the upwash velocity at an unyawed wing (reference 7).

The variation along the tunnel axis of the induced velocity $w$ has been computed by Lotz (reference 2) and Burgers (reference 8)[1] for the special case of a wing at zero angle of yaw. These values are not in complete agreement with each other. The results obtained herein for this case, by methods essentially similar to those of Lotz, check the results obtained by Burgers (fig. 8). In reference 2, moreover, Lotz has stated that the induced velocity obtained by the calculations of Burgers (reference 8) does not have a maximum. An extension of these calculations showed, however, that a maximum is obtained. It must accordingly be concluded that Lotz is in error both as to results and accusation. Burgers' method was not used in the present work because it appeared from preliminary study to be very unwieldy. Closer inspection, however, has since indicated that the computations involved would probably have been less laborious than those needed with the method of Lotz.

### Wings at High Angles of Attack

In general, a yawed wing in a wind tunnel is rotated about its quarter-chord line and this angle of rotation $\bar{\alpha}$ is the angle of attack of the wing. In correcting for the tunnel-induced

[1]Although reference 8 is published under the joint authorship of von Kármán and Burgers, the preface states that the chapter cited herein was contributed by Burgers.

velocity, it is assumed that only the velocity normal to the plane of the lifting line and free-stream direction, the xy-plane, has any effect on the lift. The correction is made to the angle of attack and is given by

$$\Delta\bar{\alpha} \approx \tan \Delta\bar{\alpha} = \frac{w}{V \cos \psi} \tag{13}$$

where $w$ is the tunnel-induced velocity normal to the xy-plane and $V \cos \psi$ is the component of the free-stream velocity normal to the axis of rotation. It is this velocity $w$ which is tabulated herein in terms of the parameter $\frac{4\pi r_o w}{\Gamma\sigma \cos \psi}$. Then,

$$\Delta\bar{\alpha} \approx \left(\frac{4\pi r_o w}{\Gamma\sigma \cos \psi}\right) \frac{\Gamma\sigma}{4\pi r_o V}$$

or, by using the relation between circulation and lift coefficient (if the wing can be assumed to be adequately represented by a single lifting line of uniform circulation)

$$C_L \approx \frac{2\Gamma}{VS} (2\sigma r_o \cos \psi)$$

the correction may be rewritten as

$$\Delta\bar{\alpha} \approx \left(\frac{4\pi r_o w}{\Gamma\sigma \cos \psi}\right) \frac{SC_L}{16\pi r_o^2 \cos \psi} \tag{14}$$

Special consideration must be given to the case of swept-back wings. For this case, the wing is rotated about a fixed horizontal axis normal to the tunnel axis, the $y_o$-axis. As this angle of rotation $\alpha$ varies, the angle of yaw $\psi$ (defined as the angle between the lifting line and the plane perpendicular to the free-stream direction) and the angle $\phi/2$ between the xy-plane and the $xy_o$-plane vary also (fig. 9. The xy-plane is still the plane of the x-axis and the lifting line.) The dependence takes the form

$$\begin{aligned} \cos \psi &= \cos \psi_o \sqrt{1 + \tan^2\psi_o \sin^2\alpha} \\ &= \frac{\cos \psi_o}{\cos \frac{\phi}{2}} \end{aligned} \tag{15}$$

where $\psi_o$ is the angle of yaw at zero angle of attack. This variation of the yaw angle must be taken into account in using the charts and tables of this report.

The desired correction to $\alpha$ is still the one associated with the change in lift and therefore depends again only on the velocity $w$ normal to the xy-plane. A change in the angle $\alpha$, however, involves a change in the vertical velocity normal to the $xy_o$-plane. In order to obtain the same lift, the correction to the angle $\alpha$ must be such that the additional vertical velocity associated with it must have the component $w$ normal to the xy-plane. This velocity is $\frac{w}{\cos\frac{\phi}{2}}$ and thus

$$\Delta\alpha \approx \tan\Delta\alpha = \frac{w}{V\cos\frac{\phi}{2}}$$

$$\Delta\alpha \approx \left(\frac{4\pi r_o w}{\Gamma\sigma\cos\psi}\right)\frac{\Gamma\sigma\cos\psi}{4\pi r_o V\cos\frac{\phi}{2}} \tag{16}$$

The circulation about each semispan of the swept-back wing results in a force normal to the xy-plane. The lift force measured in the tunnel, however, is the vertical component of this force and, therefore, the equation connecting the lift and circulation is

$$\frac{L}{\cos\frac{\phi}{2}} = \rho V\,(2\sigma r_o\cos\psi)$$

The angle correction then becomes

$$\Delta\alpha \approx \left(\frac{4\pi r_o w}{\Gamma\sigma\cos\psi}\right)\frac{SC_L}{16\pi r_o^2}\sec^2\frac{\phi}{2} \tag{17}$$

The drag correction does not involve $\phi$ directly and is merely $w/\Gamma\sigma\cos\psi$.

Plots of $\psi$, $\phi$, and $\sec^2\frac{\phi}{2}$ against $\psi_o$ and $\alpha$ are given in figures 10, 11, and 12.

For swept-back wings at an angle of attack $\alpha$, there is an additional difficulty. For these wings the tunnel axis and the two quarter-chord lines of the wing do not lie in one plane. The correction to $\bar{\alpha}$ on each half of the wing is still obtained from the induced velocity normal to the plane of the tunnel axis and the quarter-chord line. The velocity normal to the plane of its own quarter-chord line induced by a half wing is exactly the velocity $w$ which has been found (equation 11). The velocity induced by this same half wing normal to the plane of the tunnel axis and the other quarter-chord line, however, is not $-\frac{1}{r_o\rho}\frac{\partial\Phi}{\partial\theta}\Big|_{\theta=\pi}$ but is

$$w_\phi = -\frac{1}{r_o\rho}\frac{\partial\Phi}{\partial\theta}\Big|_{\theta=\pi+\phi}$$

The function $w_{1\phi} = -\frac{1}{r_o\rho}\frac{\partial\Phi_1}{\partial\theta}\Big|_{\theta=\pi+\phi}$ is given by

$$w_{1\phi} = \frac{\Gamma}{4\pi r_o}\left\{\frac{\sigma\cos\psi\left[\cos\phi - \rho\sigma\cos\psi\right]}{\left[\cos\phi - \rho\sigma\cos\psi\right]^2 + \sin^2\phi}\left[1 + \frac{\xi\sigma\cos\psi}{\sqrt{\xi^2\sigma^2\cos^2\psi + \left[\cos\phi - \rho\sigma\cos\psi\right]^2 + \sin^2\phi}}\right]\right.$$

$$\left. - \frac{\xi\cos\phi}{\xi^2 + \rho^2\sin^2\phi}\left[1 - \frac{1 - \rho\sigma\cos\psi\cos\phi}{\sqrt{\xi^2\sigma^2\cos^2\psi + \left[\cos\phi - \rho\sigma\cos\psi\right]^2 + \sin^2\phi}}\right]\right\} \tag{18}$$

The function

$$-\frac{1}{r_o\rho}\frac{\partial\Phi_2}{\partial\theta}\bigg|_{\theta=\pi+\phi} = w_{2\phi}$$

$$= \frac{\Gamma_\cdot}{4\pi r_o}\left[\sum_m (-1)^m \cos m\phi \frac{m}{\pi}\int_0^\infty \frac{J_m(i\rho q)}{i\rho q J_m{}'(iq)}\,dq \int_{-\infty}^{\infty} g_m(\beta)\cos q(\beta - \xi)\,d\beta\right] \qquad (19)$$

The required velocity correction is then

$$w_\phi = w_{1\phi} + w_{2\phi}$$

It was considered neither feasible nor desirable to compute and tabulate the function $w_\phi$ for a range of values of $\phi$. For any particular case desired $w_{1\phi}$ may be computed by equation (18), and $w_{2\phi}$ may be computed simply by using table III and equation (19).

For values of $\phi$ of about 30° or less, $w_\phi(\xi,\rho)$ is, to a good approximation, $\cos\phi\ w(\xi,-\rho\cos\phi)$ and therefore can be obtained readily from figure 3 or table IV. This approximation is most accurate for small values of $\rho$ where $w_\phi$ is comparatively large, and is least accurate for large values of $\rho$ where $w_\phi$ is a very small part of the total correction. For this reason, the approximation may be considered adequate over the entire range of values of $\rho$.

The preceding discussion concerns only one of the difficulties associated with calculations for high angles of attack. At least two other sources of comparable inaccuracy may be pointed out, although no effort has been made here to evaluate their effects: (1) the pronounced distortion of the trailing vortex system at high angles of attack, and (2) the fact that the center of a swept-back wing may not be on the tunnel axis at high angles of attack, because the axis of rotation of the wing is usually behind the wing roots.

Langley Memorial Aeronautical Laboratory
National Advisory Committee for Aeronautics
Langley Field, Va., October 9, 1946

# APPENDIX

## PROOF OF VALIDITY OF METHOD

In this appendix the formal expression of equation (8) for the tunnel-induced potential will be called $\Phi_2^{(1)}$. The derivatives obtained by the formal differentiation of this expression will be called the derivatives of $\Phi_2^{(1)}$ and will be written as ordinary derivatives. The harmonic function which satisfies equation (2) will be called $\Phi_2$.

It is necessary to prove that $\Phi_2^{(1)} = \Phi_2$ and $\nabla\Phi_2^{(1)} = \nabla\Phi_2$. The proof will consist of the proofs of the following statements:

(1) The function $\Phi_2^{(1)}$ converges to an harmonic function $\Phi_2^{(2)}$ for $\rho \leq 1$ and $\nabla\Phi_2^{(1)}$ converges to $\nabla\Phi_2^{(2)}$ for $\rho \leq \rho_o < 1$.

(2) $$\lim_{r \to r_o} \frac{\partial\Phi_2^{(2)}}{\partial r} = \left.\frac{\partial\Phi_2}{\partial r}\right|_{r=r_o}$$

Then by the uniqueness theorem for harmonic functions (reference 9), it follows that $\Phi_2^{(1)} = \Phi_2$. This theorem and the others used herein, which are derived in reference 9 for bounded regions, are immediately extensible to the infinite region of the present problem for functions which approach zero as $\xi$ approaches infinity.

In order to prove the first statement, it is sufficient to show that the infinite integrals and the infinite series appearing in $\Phi_2^{(1)}$ converge uniformly with respect to $\xi$, $\rho$, $\theta$ (Harnack's first theorem on convergence, reference 9).

The convergence of the infinite integrals depends upon the characteristics of the functions $g_m(\xi)$. The characteristics used in the following discussion, which are easily verified by expansion of $F(\xi,\theta)$ in a Fourier series are:

(a) The functions $g_m(\xi)$ are bounded and continuous for all values of $\xi$ and approach zero as $|\xi|$ approaches infinity

(b) The derivatives $dg_m(\xi)/d\xi$ exist and are absolutely integrable from minus infinity to plus infinity.

(c) As $\xi \longrightarrow \infty$, $g_m(\xi) + g_m(-\xi) = O(1/\xi^2)$

An integration by parts gives

$$\int_{-\infty}^{\infty} g_m(\beta) \cos q(\beta - \xi)\, d\beta = \left.\frac{g_m(\beta) \sin q(\beta - \xi)}{q}\right|_{-\infty}^{\infty}$$

$$- \frac{1}{q} \int_{-\infty}^{\infty} g_m'(\beta) \sin q(\beta - \xi)\, d\beta$$

It follows from properties (a) and (b) that the integral converges for $q > 0$. From property (c) it follows that the principal value of the integral converges for $q = 0$. Since $\frac{J_m(i\rho q)}{iqJ_m'(iq)}$ is bounded for all values of $q$, the function

$$\frac{J_m(i\rho q)}{iqJ_m'(iq)} \int_{-\infty}^{\infty} g_m(\beta) \cos q(\beta - \xi)\, d\beta$$

has no singularities and the convergence of the integral

$$\frac{1}{\pi} \int_0^{\infty} \frac{J_m(i\rho q)}{iqJ_m'(iq)} \left[\int_{-\infty}^{\infty} g_m(\beta) \cos q(\beta - \xi)\, d\beta\right] dq$$

with respect to $q$ need only be considered in the infinite region of $q$. Since for $\rho \leqq 1$ (reference 4),

$$\left|\frac{J_m(i\rho q)}{iJ_m'(iq)}\right| \leqq 1$$

it is sufficient to prove that

$$\int_K^{\infty} \left|\int_{-\infty}^{\infty} g_m(\beta) \cos q(\beta - \xi)\, d\beta\right| \frac{dq}{q}$$

converges in order to prove that the original integral converges uniformly in $\xi$, $\rho$, $\theta$ in the region $\rho \leq 1$. From the integration by parts and properties (a) and (b) it follows that

$$\int_K^\infty \left| \int_{-\infty}^\infty g_m(\beta) \cos q(\beta - \xi)\, d\beta \right| \frac{dq}{q} \leq C \int_K^\infty \frac{dq}{q^2}$$

which converges. Therefore $\int_K^\infty \left| \int_{-\infty}^\infty g_m(\beta) \cos q(\beta - \xi)\, d\beta \right| \frac{dq}{q}$ converges.

In order to complete the proof of the first statement, the infinite series of infinite integrals must also be shown to converge uniformly in $\xi$, $\rho$, $\theta$ for $\rho \leq 1$.

If

$$G_m(\xi, \rho, \theta) \equiv \frac{\sin m\theta}{\pi} \int_0^\infty \frac{J_m(i\rho q)}{iqJ_m'(iq)}\, dq \int_{-\infty}^\infty g_m(\beta) \cos q(\beta - \xi)\, d\beta$$

can be shown to be less in absolute value than $K/m^2$ where $K$ is an arbitrary constant, the proof will be complete, for then

$$\left| \sum_{m=M}^\infty G_m(\xi, \rho, \theta) \right| \leq \sum_{m=M}^\infty \left| G_m(\xi, \rho, \theta) \right| \leq K \sum_{m=M}^\infty \frac{1}{m^2} < \epsilon$$

for $M$ sufficiently large. The functions $g_m(\xi)$ are the Fourier coefficients of a function $-\frac{4\pi r_o}{\Gamma} F(\xi, \theta)$ which has continuous first and second derivatives. Therefore (reference 10, p. 84), there exists a sequence of functions, $c_m(\xi)$, uniformily bounded in $m$, such that

$$m^2 g_m(\xi) \equiv c_m(\xi)$$

The integrals

$$\frac{1}{\pi} \sin m\theta \int_0^\infty \frac{J_m(i\rho q)}{iqJ_m'(iq)} dq \int_{-\infty}^\infty c_m(\beta) \cos q(\beta - \xi) d\beta \equiv m^2 G_m(\xi, \rho, \theta)$$

are therefore uniformly bounded in $m$. Thus

$$\left|G_m(\xi, \rho, \theta)\right| \leqq \frac{K}{m^2}$$

and the proof of the first statement is complete.

The proof of the second statement proceeds as follows:

$$\lim_{r \to r_0} \frac{\partial \Phi_2^{(2)}}{\partial r} = -\frac{\Gamma}{4\pi r_0} \lim_{\rho \to 1} \frac{\partial}{\partial \rho} \left[\sum_m \sin m\theta \int_0^\infty \frac{J_m(i\rho q)}{iqJ_m'(iq)} dq \int_{-\infty}^\infty g_m(\beta) \cos q(\beta - \xi) d\beta\right]$$

In the proof of the first statement it was shown that $\left|q \int_{-\infty}^\infty g_m(\beta) \cos q(\beta - \xi) d\beta\right|$ is bounded. A second integration by parts shows that, since $g_m''(\beta)$ is bounded and absolutely integrable from $-\infty$ to $+\infty$ $\left|q^2 \int_{-\infty}^\infty g_m(\beta) \cos q(\beta - \xi) d\beta\right|$ is bounded. Thus the integrand obtained by differentiating under the integral sign is such that the integral converges uniformly for $\rho \leqq 1$, and the differentiation is therefore valid. Since the infinite series also converges uniformly, it follows that

$$\lim_{r \to r_o} \frac{\partial \Phi_2^{(2)}}{\partial r} = -\frac{\Gamma}{4\pi r_o} \sum_m \sin m\theta \, \frac{1}{\pi} \int_0^\infty dq \int_{-\infty}^\infty g_m(\beta) \cos q(\beta - \xi) \, d\beta$$

From the remark following theorem 7, reference 11, it follows that

$$\lim_{r \to r_o} \frac{\partial \Phi_2^{(2)}}{\partial r} = -\frac{\Gamma}{4\pi r_o} \sum_m \sin m\theta \; g_m(\xi)$$

and since the Fourier expansion of a function which is continuous and has continuous first derivatives converges to the generating function,

$$\lim_{r \to r_o} \frac{\partial \Phi_2^{(2)}}{\partial r} = \left. \frac{\partial \Phi_2}{\partial r} \right|_{r=r_o}$$

The second statement has thus been proved and the validity of the operations performed in the analysis has been established.

## REFERENCES

1. Swanson, Robert S.: Jet-Boundary Corrections to a Yawed Model in a Closed Rectangular Wind Tunnel. NACA ARR, Feb. 1943.

2. Lotz, Irmgard: Correction of Downwash in Wind Tunnels of Circular and Elliptic Sections. NACA TM No. 801, 1936.

3. Gray, Andrew, Mathews, G. B., and MacRobert, T. M.: A Treatise on Bessel Functions and Their Applications to Physics. Second ed., Macmillan & Co., Ltd., 1931.

4. Jahnke, Eugen, and Emde, Fritz: Tables of Functions with Formulae and Curves. Rev. ed., Dover Publications (New York), 1943.

5. Churchill, Ruel V.: Fourier Series and Boundary Value Problems. McGraw-Hill Book Co., Inc., 1941.

6. Milne-Thomson, L. M.: The Calculus of Finite Differences. Macmillan & Co., Ltd., 1933.

7. Glauert, H.: The Elements of Aerofoil and Airscrew Theory. Cambridge Univ. Press, 1937.

8. von Kármán, Th., and Burgers, J. M.: General Aerodynamic Theory - Perfect Fluids. Influence of Boundaries in the Field of Motion around Airfoil Systems. Vol. II of Aerodynamic Theory, div. E, ch. IV, pt. C. W. F. Durand, ed., Julius Springer (Berlin), 1935, pp. 265-273.

9. Kellogg, Oliver Dimon: Foundations of Potential Theory. Julius Springer (Berlin), 1929.

10. Tamarkin, J. D., and Feller, Willy: Partial Differential Equations. Advanced Instruction and Research in Mechanics, Brown Univ., Summer 1941.

11. Titchmarsh, E. C.: Introduction to the Theory of Fourier Integrals. The Clarendon Press (Oxford), 1937.

TABLE I.- VALUES OF THE FUNCTIONS $l_m(q)$ and $k_m(q)$ FOR VARIOUS VALUES OF $\sigma$, $\psi$, $q$

$$\left[l_m(q, \sigma, \psi) = l_m(q, \sigma, -\psi);\ k_m(q, \sigma, \psi) = -k_m(q, \sigma, -\psi)\right]$$

| | $\sigma = 0.45$, $\psi = -45^\circ$ | | | | | | $\sigma = 0.45$, $\psi = -30^\circ$ | | | | | |
|---|---|---|---|---|---|---|---|---|---|---|---|---|
| $q/\pi$ | $l_1(q)$ | $k_1(q)$ | $l_2(q)$ | $k_2(q)$ | $l_3(q)$ | $k_3(q)$ | $l_1(q)$ | $k_1(q)$ | $l_2(q)$ | $k_2(q)$ | $l_3(q)$ | $k_3(q)$ |
| 0 | 1.5708 | ------ | ------ | ------ | ------- | ------- | ------ | ------ | ------ | ------ | ------- | ------- |
| .05 | 1.1663 | 0.0509 | 0.1564 | 0.0208 | -0.0283 | -0.0093 | 1.2716 | 0.0446 | 0.1819 | 0.0219 | -0.0350 | -0.0107 |
| .10 | .9013 | .0523 | .1683 | .0211 | -.0347 | -.0079 | 1.0151 | .0452 | .2034 | .0209 | -.0443 | -.0099 |
| .15 | .6006 | .0522 | .1198 | .0224 | -.0259 | -.0071 | .6834 | .0462 | .1500 | .0202 | -.0350 | -.0094 |
| .20 | .3900 | .0518 | .0784 | .0234 | -.0180 | -.0074 | .4473 | .0468 | .1038 | .0189 | -.0302 | -.0104 |
| .25 | .3279 | .0516 | .0740 | .0226 | -.0191 | -.0078 | .3843 | .0461 | .1018 | .0170 | -.0302 | -.0107 |
| .30 | .3343 | .0509 | .0845 | .0217 | -.0228 | -.0074 | .3990 | .0444 | .1165 | .0152 | -.0356 | -.0097 |
| .35 | .3026 | .0492 | .0816 | .0210 | -.0219 | -.0071 | .3654 | .0424 | .1133 | .0142 | -.0347 | -.0088 |
| .40 | .2233 | .0470 | .0686 | .0207 | -.0185 | -.0071 | .2931 | .0408 | .0968 | .0142 | -.0304 | -.0089 |
| .45 | .1977 | .0454 | .0612 | .0200 | -.0166 | -.0075 | .2445 | .0401 | .0875 | .0151 | -.0285 | -.0092 |
| .50 | .1822 | .0441 | .0585 | .0182 | -.0166 | -.0074 | .2265 | .0386 | .0842 | .0163 | -.0283 | -.0090 |
| .55 | .1607 | .0418 | .0483 | .0177 | -.0153 | -.0069 | .1997 | .0362 | .0744 | .0174 | -.0264 | -.0083 |
| .60 | .1247 | .0389 | .0388 | .0172 | -.0121 | -.0065 | .1557 | .0336 | .0594 | .0188 | -.0219 | -.0079 |
| .65 | .0978 | .0358 | .0314 | .0170 | -.0107 | -.0064 | .1234 | .0315 | .0496 | .0200 | -.0189 | -.0081 |
| .70 | .0879 | .0333 | .0291 | .0159 | -.0096 | -.0061 | .1121 | .0297 | .0463 | .0204 | -.0180 | -.0079 |
| .75 | .0774 | .0311 | .0257 | .0146 | -.0089 | -.0057 | .0993 | .0277 | .0414 | .0197 | -.0168 | -.0074 |
| .80 | .0621 | .0289 | .0203 | .0139 | -.0072 | -.0053 | .0801 | .0257 | .0340 | .0182 | -.0144 | -.0069 |
| .85 | .0505 | .0264 | .0173 | .0132 | -.0059 | -.0050 | .0654 | .0240 | .0294 | .0164 | -.0125 | -.0067 |
| .90 | .0488 | .0245 | .0174 | .0125 | -.0057 | -.0049 | .0632 | .0230 | .0292 | .0140 | -.0119 | -.0065 |
| .95 | .0466 | .0225 | .0164 | .0112 | -.0056 | -.0045 | .0593 | .0214 | .0273 | .0114 | -.0113 | -.0060 |
| 1.00 | .0377 | .0208 | .0134 | .0102 | -.0047 | -.0041 | .0493 | .0197 | .0228 | .0091 | -.0099 | -.0054 |
| 1.05 | .0294 | .0192 | .0112 | .0096 | -.0038 | -.0039 | .0391 | .0181 | .0192 | .0075 | -.0085 | -.0051 |
| 1.10 | .0270 | .0175 | .0108 | .0088 | -.0034 | -.0036 | .0362 | .0168 | .0184 | .0068 | -.0078 | -.0049 |
| 1.15 | .0242 | .0162 | .0097 | .0075 | -.0030 | -.0033 | .0330 | .0152 | .0164 | .0070 | -.0072 | -.0045 |
| 1.20 | .0175 | .0154 | .0072 | .0066 | -.0027 | -.0029 | .0249 | .0142 | .0126 | .0078 | -.0060 | -.0040 |
| 1.25 | .0115 | .0142 | .0052 | .0060 | -.0021 | -.0026 | .0174 | .0128 | .0098 | .0090 | -.0049 | -.0035 |
| 1.30 | .0108 | .0130 | .0048 | .0055 | -.0020 | -.0024 | .0164 | .0117 | .0096 | .0105 | -.0047 | -.0032 |
| 1.35 | .0113 | .0118 | .0047 | .0048 | -.0021 | -.0022 | .0167 | .0109 | .0090 | .0118 | -.0044 | -.0031 |
| 1.40 | .0085 | .0108 | .0036 | .0042 | -.0017 | -.0020 | .0134 | .0101 | .0074 | .0124 | -.0036 | -.0029 |
| 1.45 | .0121 | .0098 | .0028 | .0038 | -.0014 | -.0018 | .0110 | .0090 | .0063 | .0124 | -.0033 | -.0026 |
| 1.50 | .0067 | .0086 | .0034 | .0036 | -.0014 | -.0017 | .0116 | .0082 | .0071 | .0117 | -.0031 | -.0025 |
| 1.55 | .0085 | .0079 | .0037 | .0031 | -.0013 | -.0015 | .0139 | .0074 | .0077 | .0103 | -.0031 | -.0023 |
| 1.60 | .0075 | .0068 | .0030 | .0029 | -.0013 | -.0015 | .0120 | .0066 | .0065 | .0085 | -.0026 | -.0023 |
| 1.65 | .0048 | .0058 | .0023 | .0027 | -.0011 | -.0014 | .0087 | .0057 | .0053 | .0065 | -.0023 | -.0022 |
| 1.70 | .0040 | .0048 | .0020 | .0027 | -.0011 | -.0014 | .0077 | .0048 | .0050 | .0048 | -.0023 | -.0022 |
| 1.75 | .0045 | .0040 | .0021 | .0026 | -.0011 | -.0013 | .0085 | .0041 | .0050 | .0037 | -.0021 | -.0021 |
| 1.80 | .0029 | .0032 | .0015 | .0023 | -.0009 | -.0012 | .0068 | .0034 | .0041 | .0033 | -.0018 | -.0021 |
| 1.85 | .0005 | .0024 | .0008 | .0022 | -.0006 | -.0012 | .0039 | .0028 | .0030 | .0037 | -.0015 | -.0020 |
| 1.90 | .0002 | .0017 | .0008 | .0022 | -.0006 | -.0011 | .0033 | .0023 | .0027 | .0048 | -.0014 | -.0019 |
| 1.95 | .0012 | .0011 | .0011 | .0021 | -.0006 | -.0010 | .0045 | .0018 | .0031 | .0063 | -.0014 | -.0019 |
| 2.00 | 0 | .0004 | .0011 | .0021 | -.0003 | -.0009 | .0044 | .0013 | .0030 | .0080 | -.0012 | -.0017 |

NATIONAL ADVISORY
COMMITTEE FOR AERONAUTICS

TABLE I.- VALUES OF THE FUNCTIONS $l_m(q)$ AND $k_m(q)$ - Continued

| | $\sigma = 0.90,\ \psi = -45^\circ$ | | | | | | $\sigma = 0.90,\ \psi = -30^\circ$ | | | | | |
|---|---|---|---|---|---|---|---|---|---|---|---|---|
| $q/\pi$ | $l_1(q)$ | $k_1(q)$ | $l_2(q)$ | $k_2(q)$ | $l_3(q)$ | $k_3(q)$ | $l_1(q)$ | $k_1(q)$ | $l_2(q)$ | $k_2(q)$ | $l_3(q)$ | $k_3(q)$ |
| 0 | 0 | 0.1584 | 0 | 0.1722 | 0 | -0.1139 | 0 | 0.1319 | 0 | 0.1597 | 0 | -0.1214 |
| .05 | 1.5249 | .1861 | .2266 | .1717 | -.0205 | -.1134 | 1.5956 | .1573 | .2487 | .1578 | -.0273 | -.1239 |
| .10 | 1.2838 | .1894 | .2672 | .1694 | -.0384 | -.1128 | 1.3801 | .1622 | .2995 | .1598 | -.0490 | -.1232 |
| .15 | .8786 | .1978 | .2017 | .1674 | -.0520 | -.1119 | .9550 | .1707 | .2365 | .1609 | -.0664 | -.1232 |
| .20 | .5770 | .2075 | .1481 | .1557 | -.0561 | -.1106 | .6373 | .1791 | .1845 | .1611 | -.0741 | -.1226 |
| .25 | .5059 | .2086 | .1563 | .1644 | -.0512 | -.1088 | .5692 | .1793 | .1982 | .1594 | -.0682 | -.1215 |
| .30 | .5372 | .1999 | .1813 | .1608 | -.0500 | -.1067 | .6084 | .1718 | .2300 | .1567 | -.0736 | -.1203 |
| .35 | .4987 | .1988 | .1773 | .1559 | -.0502 | -.1041 | .5680 | .1620 | .2253 | .1543 | -.0759 | -.1186 |
| .40 | .4038 | .1837 | .1414 | .1510 | -.0500 | -.1009 | .4645 | .1561 | .1963 | .1516 | -.0776 | -.1163 |
| .45 | .3394 | .1821 | .1243 | .1471 | -.0454 | -.0980 | .3954 | .1542 | .1802 | .1493 | -.0746 | -.1143 |
| .50 | .3125 | .1760 | .1192 | .1410 | -.0385 | -.0944 | .3676 | .1499 | .1760 | .1449 | -.0688 | -.1117 |
| .55 | .2688 | .1650 | .1037 | .1336 | -.0331 | -.0906 | .3210 | .1424 | .1605 | .1395 | -.0643 | -.1086 |
| .60 | .2033 | .1541 | .0782 | .1264 | -.0279 | -.0865 | .2487 | .1340 | .1334 | .1341 | -.0597 | -.1053 |
| .65 | .1566 | .1446 | .0600 | .1193 | -.0223 | -.0823 | .1966 | .1266 | .1132 | .1290 | -.0543 | -.1018 |
| .70 | .1388 | .1350 | .0524 | .1115 | -.0159 | -.0778 | .1766 | .1197 | .1035 | .1233 | -.0478 | -.0979 |
| .75 | .1166 | .1251 | .0429 | .1032 | -.0107 | -.0733 | .1540 | .1124 | .0917 | .1168 | -.0420 | -.0938 |
| .80 | .0862 | .1163 | .0293 | .0950 | -.0070 | -.0687 | .1232 | .1043 | .0753 | .1099 | -.0375 | -.0897 |
| .85 | .0652 | .1090 | .0202 | .0872 | -.0034 | -.0641 | .1002 | .0978 | .0637 | .1036 | -.0325 | -.0854 |
| .90 | .0622 | .1025 | .0173 | .0796 | .0007 | -.0595 | .0948 | .0899 | .0586 | .0976 | -.0269 | -.0811 |
| .95 | .0560 | .0954 | .0130 | .0723 | .0039 | -.0550 | .0854 | .0865 | .0522 | .0914 | -.0221 | -.0768 |
| 1.00 | .0383 | .0886 | .0051 | .0654 | .0061 | -.0505 | .0676 | .0802 | .0415 | .0851 | -.0180 | -.0724 |
| 1.05 | .0230 | .0814 | -.0006 | .0589 | .0084 | -.0462 | .0539 | .0749 | .0332 | .0792 | -.0143 | -.0682 |
| 1.10 | .0191 | .0732 | -.0024 | .0526 | .0109 | -.0420 | .0495 | .0680 | .0291 | .0734 | -.0110 | -.0639 |
| 1.15 | .0141 | .0633 | -.0052 | .0471 | .0122 | -.0379 | .0421 | .0618 | .0238 | .0680 | -.0074 | -.0597 |
| 1.20 | -.0015 | .0529 | -.0105 | .0419 | .0135 | -.0340 | .0266 | .0566 | .0163 | .0627 | -.0054 | -.0557 |
| 1.25 | -.0139 | .0414 | -.0142 | .0368 | .0145 | -.0302 | .0145 | .0521 | .0100 | .0577 | -.0031 | -.0517 |
| 1.30 | -.0161 | .0287 | -.0140 | .0320 | .0159 | -.0267 | .0126 | .0473 | .0073 | .0528 | -.0008 | -.0480 |
| 1.35 | -.0158 | .0157 | -.0135 | .0275 | .0163 | -.0234 | .0113 | .0423 | .0052 | .0481 | .0013 | -.0443 |
| 1.40 | -.0210 | .0033 | -.0153 | .0236 | .0161 | -.0203 | .0041 | .0382 | .0011 | .0438 | .0027 | -.0408 |
| 1.45 | -.0248 | -.0073 | -.0160 | .0201 | .0159 | -.0174 | -.0007 | .0346 | -.0001 | .0391 | .0042 | -.0376 |
| 1.50 | -.0206 | -.0159 | -.0141 | .0167 | .0161 | -.0148 | .0031 | .0317 | -.0013 | .0362 | .0063 | -.0345 |
| 1.55 | -.0152 | -.0217 | -.0120 | .0137 | .0161 | -.0124 | .0070 | .0290 | -.0012 | .0328 | .0081 | -.0315 |
| 1.60 | -.0161 | -.0239 | -.0126 | .0111 | .0153 | -.0102 | .0029 | .0266 | -.0035 | .0296 | .0090 | -.0287 |
| 1.65 | -.0190 | -.0223 | -.0134 | .0091 | .0142 | -.0082 | -.0025 | .0247 | -.0056 | .0267 | .0092 | -.0261 |
| 1.70 | -.0177 | -.0182 | -.0128 | .0074 | .0137 | -.0064 | -.0028 | .0225 | -.0061 | .0242 | .0094 | -.0236 |
| 1.75 | -.0136 | -.0128 | -.0115 | .0060 | .0131 | -.0047 | -.0014 | .0207 | -.0062 | .0221 | .0094 | -.0212 |
| 1.80 | -.0136 | -.0066 | -.0119 | .0048 | .0123 | -.0032 | -.0040 | .0191 | -.0077 | .0201 | .0088 | -.0190 |
| 1.85 | -.0153 | -.0001 | -.0121 | .0039 | .0112 | -.0019 | -.0083 | .0178 | -.0092 | .0185 | .0080 | -.0169 |
| 1.90 | -.0129 | .0057 | -.0109 | .0031 | .0105 | -.0007 | -.0080 | .0160 | -.0092 | .0170 | .0073 | -.0150 |
| 1.95 | -.0073 | .0097 | -.0091 | .0023 | .0100 | .0004 | -.0045 | .0144 | -.0082 | .0150 | .0073 | -.0133 |
| 2.00 | -.0037 | .0116 | -.0079 | .0015 | .0094 | .0013 | -.0035 | .0132 | -.0080 | .0136 | .0073 | -.0116 |

NATIONAL ADVISORY
COMMITTEE FOR AERONAUTICS

TABLE I.- VALUES OF THE FUNCTIONS $l_m(q)$ AND $k_m(q)$ - Continued

| | $\sigma = 0.45,\ \psi = -15^\circ$ | | | | | | $\sigma = 0.45,\ \psi = 0^\circ$ | | | | | |
|---|---|---|---|---|---|---|---|---|---|---|---|---|
| $q/\pi$ | $l_1(q)$ | $k_1(q)$ | $l_2(q)$ | $k_2(q)$ | $l_3(q)$ | $k_3(q)$ | $l_1(q)$ | $k_1(q)$ | $l_2(q)$ | $k_2(q)$ | $l_3(q)$ | $k_3(q)$ |
| 0 | 1.5708 | ------ | ------ | ------ | ------- | ------- | 1.5708 | 0 | ------ | 0 | ------- | 0 |
| .05 | 1.3232 | 0.0243 | 0.1894 | 0.0130 | -0.0393 | -0.0084 | 1.3563 | 0 | 0.1956 | 0 | -0.0402 | 0 |
| .10 | 1.0722 | .0248 | .2176 | .0118 | -.0488 | -.0073 | 1.1086 | 0 | .2261 | 0 | -.0526 | 0 |
| .15 | .7268 | .0283 | .1662 | .0126 | -.0409 | -.0068 | .7479 | 0 | .1728 | 0 | -.0432 | 0 |
| .20 | .4790 | .0313 | .1191 | .0145 | -.0344 | -.0081 | .4888 | 0 | .1256 | 0 | -.0366 | 0 |
| .25 | .4161 | .0313 | .1206 | .0148 | -.0386 | -.0086 | .4275 | 0 | .1256 | 0 | -.0424 | 0 |
| .30 | .4350 | .0286 | .1371 | .0140 | -.0449 | -.0074 | .4515 | 0 | .1438 | 0 | -.0501 | 0 |
| .35 | .4003 | .0258 | .1345 | .0133 | -.0445 | -.0063 | .4149 | 0 | .1424 | 0 | -.0490 | 0 |
| .40 | .3228 | .0243 | .1180 | .0135 | -.0404 | -.0063 | .3327 | 0 | .1424 | 0 | -.0438 | 0 |
| .45 | .2712 | .0231 | .1084 | .0137 | -.0385 | -.0068 | .2816 | 0 | .1157 | 0 | -.0421 | 0 |
| .50 | .2523 | .0206 | .1048 | .0133 | -.0384 | -.0064 | .2665 | 0 | .1123 | 0 | -.0447 | 0 |
| .55 | .2233 | .0181 | .0939 | .0122 | -.0361 | -.0055 | .2383 | 0 | .1017 | 0 | -.0402 | 0 |
| .60 | .1751 | .0167 | .0774 | .0117 | -.0312 | -.0051 | .1833 | 0 | .0851 | 0 | -.0345 | 0 |
| .65 | .1395 | .0161 | .0668 | .0119 | -.0280 | -.0053 | .1441 | 0 | .0736 | 0 | -.0311 | 0 |
| .70 | .1266 | .0152 | .0623 | .0118 | -.0268 | -.0053 | .1322 | 0 | .0687 | 0 | -.0305 | 0 |
| .75 | .1126 | .0139 | .0564 | .0118 | -.0248 | -.0048 | .1196 | 0 | .0620 | 0 | -.0291 | 0 |
| .80 | .0918 | .0133 | .0478 | .0108 | -.0219 | -.0045 | .0974 | 0 | .0524 | 0 | -.0260 | 0 |
| .85 | .0758 | .0133 | .0426 | .0105 | -.0198 | -.0042 | .0799 | 0 | .0460 | 0 | -.0233 | 0 |
| .90 | .0734 | .0134 | .0413 | .0102 | -.0188 | -.0045 | .0775 | 0 | .0439 | 0 | -.0224 | 0 |
| .95 | .0704 | .0127 | .0387 | .0096 | -.0178 | -.0044 | .0738 | 0 | .0408 | 0 | -.0214 | 0 |
| 1.00 | .0588 | .0120 | .0333 | .0091 | -.0159 | -.0040 | .0602 | 0 | .0353 | 0 | -.0191 | 0 |
| 1.05 | .0483 | .0116 | .0290 | .0088 | -.0141 | -.0039 | .0484 | 0 | .0307 | 0 | -.0166 | 0 |
| 1.10 | .0453 | .0111 | .0272 | .0084 | -.0130 | -.0038 | .0470 | 0 | .0289 | 0 | -.0152 | 0 |
| 1.15 | .0419 | .0101 | .0244 | .0077 | -.0119 | -.0037 | .0441 | 0 | .0262 | 0 | -.0140 | 0 |
| 1.20 | .0330 | .0091 | .0196 | .0072 | -.0103 | -.0035 | .0326 | 0 | .0218 | 0 | -.0122 | 0 |
| 1.25 | .0246 | .0084 | .0159 | .0069 | -.0089 | -.0032 | .0214 | 0 | .0183 | 0 | -.0102 | 0 |
| 1.30 | .0230 | .0076 | .0142 | .0065 | -.0081 | -.0030 | .0206 | 0 | .0173 | 0 | -.0092 | 0 |
| 1.35 | .0233 | .0066 | .0135 | .0062 | -.0075 | -.0028 | .0241 | 0 | .0163 | 0 | -.0085 | 0 |
| 1.40 | .0195 | .0056 | .0108 | .0057 | -.0066 | -.0026 | .0222 | 0 | .0134 | 0 | -.0074 | 0 |
| 1.45 | .0146 | .0049 | .0090 | .0054 | -.0056 | -.0023 | .0182 | 0 | .0117 | 0 | -.0064 | 0 |
| 1.50 | .0171 | .0046 | .0091 | .0050 | -.0052 | -.0021 | .0197 | 0 | .0116 | 0 | -.0059 | 0 |
| 1.55 | .0193 | .0041 | .0094 | .0046 | -.0049 | -.0019 | .0232 | 0 | .0114 | 0 | -.0055 | 0 |
| 1.60 | .0172 | .0038 | .0076 | .0041 | -.0041 | -.0017 | .0213 | 0 | .0093 | 0 | -.0046 | 0 |
| 1.65 | .0133 | .0035 | .0058 | .0036 | -.0034 | -.0016 | .0165 | 0 | .0069 | 0 | -.0037 | 0 |
| 1.70 | .0120 | .0036 | .0052 | .0032 | -.0029 | -.0014 | .0146 | 0 | .0054 | 0 | -.0030 | 0 |
| 1.75 | .0124 | .0032 | .0048 | .0028 | -.0027 | -.0014 | .0155 | 0 | .0048 | 0 | -.0028 | 0 |
| 1.80 | .0105 | .0025 | .0037 | .0024 | -.0022 | -.0014 | .0133 | 0 | .0033 | 0 | -.0021 | 0 |
| 1.85 | .0068 | .0020 | .0024 | .0020 | -.0016 | -.0014 | .0089 | 0 | .0018 | 0 | -.0014 | 0 |
| 1.90 | .0065 | .0017 | .0019 | .0016 | -.0015 | -.0013 | .0076 | 0 | .0015 | 0 | -.0012 | 0 |
| 1.95 | .0077 | .0011 | .0023 | .0013 | -.0014 | -.0014 | .0090 | 0 | .0022 | 0 | -.0012 | 0 |
| 2.00 | .0077 | .0003 | .0019 | .0010 | -.0012 | -.0013 | .0089 | 0 | .0025 | 0 | -.0010 | 0 |

NATIONAL ADVISORY
COMMITTEE FOR AERONAUTICS

TABLE I.- VALUES OF THE FUNCTIONS $l_m(q)$ AND $k_m(q)$ - Concluded

| | $\sigma = 0.90,\ \psi = -15^\circ$ | | | | | | $\sigma = 0.90,\ \psi = 0^\circ$ | | | | | |
|---|---|---|---|---|---|---|---|---|---|---|---|---|
| $q/\pi$ | $l_1(q)$ | $k_1(q)$ | $l_2(q)$ | $k_2(q)$ | $l_3(q)$ | $k_3(q)$ | $l_1(q)$ | $k_1(q)$ | $l_2(q)$ | $k_2(q)$ | $l_3(q)$ | $k_3(q)$ |
| 0 | 0 | 0.0683 | 0 | 0.0867 | 0 | -0.0691 | 0 | 0 | 0 | 0 | 0 | 0 |
| .05 | 1.6383 | .0878 | .2574 | .0883 | -.0317 | -.0751 | 1.6663 | 0 | .2672 | 0 | -.0460 | 0 |
| .10 | 1.4343 | .0863 | .3161 | .0915 | -.0486 | -.0736 | 1.4620 | 0 | .3286 | 0 | -.0731 | 0 |
| .15 | 1.0071 | .0927 | .2575 | .0905 | -.0799 | -.0728 | 1.0180 | 0 | .2686 | 0 | -.0862 | 0 |
| .20 | .6854 | .1042 | .2091 | .0905 | -.0912 | -.0725 | .6872 | 0 | .2204 | 0 | -.0946 | 0 |
| .25 | .6183 | .1069 | .2272 | .0902 | -.0857 | -.0721 | .6270 | 0 | .2434 | 0 | -.1038 | 0 |
| .30 | .6614 | .1022 | .2636 | .0897 | -.0980 | -.0717 | .6802 | 0 | .2847 | 0 | -.1106 | 0 |
| .35 | .6229 | .0876 | .2622 | .0932 | -.1010 | -.0711 | .6425 | 0 | .2746 | 0 | -.1202 | 0 |
| .40 | .5189 | .0862 | .2355 | .0883 | -.1076 | -.0701 | .5300 | 0 | .2593 | 0 | -.1211 | 0 |
| .45 | .4487 | .0866 | .2210 | .0877 | -.1066 | -.0694 | .4563 | 0 | .2563 | 0 | -.1209 | 0 |
| .50 | .4197 | .0863 | .2180 | .0863 | -.1023 | -.0683 | .4300 | 0 | .2479 | 0 | -.1195 | 0 |
| .55 | .3716 | .0832 | .2034 | .0845 | -.0990 | -.0671 | .3839 | 0 | .2321 | 0 | -.1167 | 0 |
| .60 | .2979 | .0787 | .1772 | .0824 | -.0953 | -.0658 | .3106 | 0 | .2059 | 0 | -.1128 | 0 |
| .65 | .2453 | .0746 | .1576 | .0804 | -.0906 | -.0646 | .2585 | 0 | .1866 | 0 | -.1108 | 0 |
| .70 | .2202 | .0707 | .1484 | .0783 | -.0846 | -.0629 | .2389 | 0 | .1781 | 0 | -.1037 | 0 |
| .75 | .1984 | .0664 | .1367 | .0758 | -.0792 | -.0614 | .2132 | 0 | .1662 | 0 | -.0991 | 0 |
| .80 | .1632 | .0623 | .1206 | .0728 | -.0753 | -.0598 | .1771 | 0 | .1488 | 0 | -.0950 | 0 |
| .85 | .1408 | .0587 | .1092 | .0696 | -.0708 | -.0581 | .1523 | 0 | .1362 | 0 | -.0907 | 0 |
| .90 | .1353 | .0552 | .1045 | .0669 | -.0657 | -.0565 | .1492 | 0 | .1307 | 0 | -.0866 | 0 |
| .95 | .1280 | .0517 | .0978 | .0641 | -.0611 | -.0548 | .1421 | 0 | .1229 | 0 | -.0826 | 0 |
| 1.00 | .1069 | .0484 | .0870 | .0611 | -.0572 | -.0531 | .1201 | 0 | .1101 | 0 | -.0784 | 0 |
| 1.05 | .0890 | .0455 | .0781 | .0579 | -.0531 | -.0513 | .1012 | 0 | .0993 | 0 | -.0741 | 0 |
| 1.10 | .0836 | .0422 | .0736 | .0551 | -.0486 | -.0494 | .0959 | 0 | .0931 | 0 | -.0699 | 0 |
| 1.15 | .0760 | .0387 | .0673 | .0522 | -.0446 | -.0476 | .0885 | 0 | .0852 | 0 | -.0653 | 0 |
| 1.20 | .0592 | .0382 | .0588 | .0494 | -.0415 | -.0457 | .0715 | 0 | .0749 | 0 | -.0613 | 0 |
| 1.25 | .0448 | .0325 | .0512 | .0466 | -.0381 | -.0437 | .0568 | 0 | .0651 | 0 | -.0567 | 0 |
| 1.30 | .0413 | .0297 | .0478 | .0439 | -.0346 | -.0418 | .0542 | 0 | .0596 | 0 | -.0526 | 0 |
| 1.35 | .0405 | .0270 | .0447 | .0413 | -.0317 | -.0398 | .0538 | 0 | .0546 | 0 | -.0488 | 0 |
| 1.40 | .0333 | .0248 | .0397 | .0387 | -.0295 | -.0378 | .0466 | 0 | .0476 | 0 | -.0450 | 0 |
| 1.45 | .0269 | .0229 | .0358 | .0360 | -.0274 | -.0358 | .0408 | 0 | .0415 | 0 | -.0415 | 0 |
| 1.50 | .0295 | .0213 | .0349 | .0337 | -.0249 | -.0338 | .0439 | 0 | .0387 | 0 | -.0384 | 0 |
| 1.55 | .0332 | .0196 | .0339 | .0315 | -.0225 | -.0318 | .0481 | 0 | .0360 | 0 | -.0355 | 0 |
| 1.60 | .0290 | .0188 | .0304 | .0257 | -.0209 | -.0299 | .0441 | 0 | .0311 | 0 | -.0327 | 0 |
| 1.65 | .0224 | .0180 | .0268 | .0270 | -.0196 | -.0281 | .0373 | 0 | .0263 | 0 | -.0302 | 0 |
| 1.70 | .0204 | .0172 | .0249 | .0248 | -.0180 | -.0262 | .0354 | 0 | .0235 | 0 | -.0277 | 0 |
| 1.75 | .0207 | .0163 | .0232 | .0229 | -.0161 | -.0244 | .0356 | 0 | .0214 | 0 | -.0258 | 0 |
| 1.80 | .0166 | .0155 | .0201 | .0212 | -.0146 | -.0226 | .0308 | 0 | .0182 | 0 | -.0237 | 0 |
| 1.85 | .0104 | .0151 | .0168 | .0193 | -.0133 | -.0210 | .0262 | 0 | .0151 | 0 | -.0219 | 0 |
| 1.90 | .0090 | .0144 | .0152 | .0176 | -.0119 | -.0193 | .0217 | 0 | .0139 | 0 | -.0202 | 0 |
| 1.95 | .0098 | .0134 | .0146 | .0161 | -.0101 | -.0177 | .0228 | 0 | .0139 | 0 | -.0188 | 0 |
| 2.00 | .0094 | .0128 | .0131 | .0146 | -.0087 | -.0162 | .0212 | 0 | .0125 | 0 | -.0173 | 0 |

NATIONAL ADVISORY
COMMITTEE FOR AERONAUTICS

TABLE II.- VALUES OF THE FUNCTIONS $\frac{J_m(i\rho q)}{i\rho q J_m'(iq)}$ FOR VARIOUS VALUES $\rho$ AND $q$

| | $\frac{J_1(i\rho q)}{i\rho q J_1'(iq)}$ | | | | | $\frac{J_2(i\rho q)}{i\rho q J_2'(iq)}$ | | | | | $\frac{J_3(i\rho q)}{i\rho q J_3'(iq)}$ | | | | |
|---|---|---|---|---|---|---|---|---|---|---|---|---|---|---|---|
| $q/\pi$ \ $\rho$ | 0 | 0.2 | 0.5 | 0.7 | 0.9 | 0 | 0.2 | 0.5 | 0.7 | 0.9 | 0 | 0.2 | 0.5 | 0.7 | 0.9 |
| 0. | 1.000 | 1.000 | 1.000 | 1.000 | 1.000 | 0 | 0.100 | 0.250 | 0.350 | 0.450 | 0 | 0.013 | 0.083 | 0.163 | 0.270 |
| .05 | .990 | .990 | .991 | .992 | .994 | 0 | .100 | .249 | .349 | .449 | 0 | .013 | .083 | .163 | .270 |
| .10 | .963 | .964 | .967 | .970 | .973 | 0 | .098 | .246 | .345 | .445 | 0 | .013 | .083 | .162 | .268 |
| .15 | .921 | .922 | .928 | .935 | .943 | 0 | .096 | .242 | .340 | .440 | 0 | .013 | .082 | .161 | .267 |
| .20 | .867 | .869 | .879 | .889 | .903 | 0 | .094 | .236 | .333 | .433 | 0 | .013 | .080 | .159 | .264 |
| .25 | .805 | .808 | .821 | .837 | .857 | 0 | .091 | .229 | .325 | .424 | 0 | .013 | .079 | .156 | .261 |
| .30 | .738 | .742 | .759 | .780 | .807 | 0 | .087 | .220 | .314 | .413 | 0 | .012 | .077 | .153 | .258 |
| .35 | .670 | .674 | .695 | .721 | .755 | 0 | .083 | .211 | .303 | .402 | 0 | .012 | .075 | .150 | .254 |
| .40 | .603 | .608 | .633 | .663 | .705 | 0 | .078 | .202 | .291 | .390 | 0 | .011 | .073 | .146 | .249 |
| .45 | .537 | .543 | .572 | .606 | .654 | 0 | .074 | .191 | .278 | .375 | 0 | .011 | .070 | .142 | .244 |
| .50 | .477 | .483 | .515 | .553 | .606 | 0 | .069 | .180 | .264 | .362 | 0 | .011 | .068 | .138 | .239 |
| .55 | .421 | .428 | .462 | .503 | .564 | 0 | .064 | .169 | .251 | .349 | 0 | .010 | .065 | .133 | .233 |
| .60 | .370 | .377 | .413 | .458 | .521 | 0 | .060 | .158 | .238 | .334 | 0 | .010 | .062 | .128 | .227 |
| .65 | .325 | .332 | .370 | .416 | .482 | 0 | .055 | .148 | .224 | .320 | 0 | .009 | .059 | .123 | .221 |
| .70 | .284 | .291 | .330 | .378 | .448 | 0 | .051 | .137 | .211 | .306 | 0 | .008 | .056 | .118 | .215 |
| .75 | .248 | .255 | .294 | .343 | .417 | 0 | .047 | .128 | .199 | .293 | 0 | .008 | .053 | .113 | .208 |
| .80 | .216 | .223 | .262 | .312 | .388 | 0 | .042 | .118 | .186 | .280 | 0 | .007 | .050 | .108 | .202 |
| .85 | .188 | .195 | .234 | .284 | .361 | 0 | .039 | .109 | .175 | .267 | 0 | .007 | .048 | .103 | .196 |
| .90 | .164 | .171 | .208 | .259 | .338 | 0 | .035 | .101 | .164 | .255 | 0 | .006 | .045 | .099 | .190 |
| .95 | .142 | .149 | .186 | .236 | .315 | 0 | .032 | .092 | .153 | .244 | 0 | .006 | .043 | .094 | .183 |
| 1.00 | .123 | .130 | .166 | .215 | .295 | 0 | .029 | .085 | .143 | .232 | 0 | .006 | .040 | .089 | .177 |
| 1.05 | .107 | .113 | .148 | .196 | .277 | 0 | .026 | .078 | .134 | .222 | 0 | .005 | .037 | .085 | .172 |
| 1.10 | .093 | .098 | .132 | .180 | .261 | 0 | .023 | .072 | .125 | .212 | 0 | .005 | .035 | .080 | .166 |
| 1.15 | .080 | .086 | .118 | .165 | .246 | 0 | .021 | .066 | .116 | .202 | 0 | .004 | .032 | .076 | .160 |
| 1.20 | .070 | .075 | .106 | .151 | .231 | 0 | .019 | .060 | .109 | .193 | 0 | .004 | .030 | .072 | .154 |
| 1.25 | .060 | .065 | .094 | .138 | .218 | 0 | .017 | .055 | .101 | .184 | 0 | .004 | .028 | .068 | .149 |
| 1.30 | .052 | .057 | .085 | .128 | .206 | 0 | .015 | .050 | .095 | .176 | 0 | .003 | .026 | .065 | .144 |
| 1.35 | .045 | .049 | .076 | .117 | .196 | 0 | .014 | .046 | .088 | .168 | 0 | .003 | .024 | .061 | .139 |
| 1.40 | .039 | .043 | .068 | .108 | .186 | 0 | .012 | .042 | .082 | .161 | 0 | .003 | .022 | .058 | .134 |
| 1.45 | .034 | .037 | .061 | .099 | .176 | 0 | .011 | .038 | .077 | .154 | 0 | .003 | .021 | .054 | .129 |
| 1.50 | .029 | .033 | .055 | .092 | .167 | 0 | .010 | .035 | .072 | .148 | 0 | .002 | .019 | .051 | .124 |
| 1.55 | .025 | .028 | .049 | .085 | .160 | 0 | .009 | .032 | .067 | .141 | 0 | .002 | .018 | .049 | .120 |
| 1.60 | .022 | .025 | .044 | .078 | .151 | 0 | .008 | .029 | .062 | .135 | 0 | .002 | .017 | .046 | .116 |
| 1.65 | .019 | .021 | .040 | .072 | .144 | 0 | .007 | .026 | .058 | .130 | 0 | .002 | .015 | .043 | .112 |
| 1.70 | .016 | .019 | .036 | .067 | .138 | 0 | .006 | .024 | .055 | .125 | 0 | .002 | .014 | .041 | .108 |
| 1.75 | .014 | .016 | .032 | .062 | .132 | 0 | .005 | .022 | .051 | .120 | 0 | .001 | .013 | .038 | .104 |
| 1.80 | .012 | .014 | .029 | .058 | .126 | 0 | .005 | .020 | .048 | .115 | 0 | .001 | .012 | .036 | .101 |
| 1.85 | .010 | .012 | .026 | .053 | .120 | 0 | .004 | .018 | .044 | .110 | 0 | .001 | .011 | .034 | .097 |
| 1.90 | .009 | .011 | .024 | .050 | .115 | 0 | .004 | .017 | .042 | .106 | 0 | .001 | .010 | .032 | .094 |
| 1.95 | .008 | .009 | .021 | .046 | .110 | 0 | .003 | .015 | .039 | .102 | 0 | .001 | .009 | .030 | .091 |
| 2.00 | .007 | .008 | .019 | .043 | .106 | 0 | .003 | .014 | .036 | .098 | 0 | .001 | .009 | .029 | .087 |

NATIONAL ADVISORY
COMMITTEE FOR AERONAUTICS

TABLE III.- VALUES OF THE FUNCTIONS $F_m = \frac{m}{\pi\sigma \cos\psi}\int_0^\infty \frac{J_m(i\rho q)}{i\rho q J_m'(iq)}\,dq \int_{-\infty}^{\infty} g_m(\beta)\cos q(\beta - \xi)\,d\beta$

FOR VARIOUS VALUES OF $\rho$, $\xi$, $\sigma$, AND $\psi$

$$\left[F_m(\sigma, \psi, \xi, \rho) = -F_m(\sigma, -\psi, -\xi, \rho)\right]$$

| $\xi$ | $\sigma = 0.45$ | | | | | | | | | | | |
|---|---|---|---|---|---|---|---|---|---|---|---|---|
| | $\psi = 45^\circ$ | | | $\psi = 30^\circ$ | | | $\psi = 15^\circ$ | | | $\psi = 0^\circ$ | | |
| | $F_1$ | $F_2$ | $F_3$ | $F_1$ | $F_2$ | $F_3$ | $F_1$ | $F_2$ | $F_3$ | $F_1$ | $F_2$ | $F_3$ |
| $\rho = 0$ | | | | | | | | | | | | |
| -0.9 | 0.6738 | 0 | 0 | 0.7678 | 0 | 0 | 0.5832 | 0 | 0 | 0.5511 | 0 | 0 |
| -.6 | .5591 | 0 | 0 | .6266 | 0 | 0 | .4624 | 0 | 0 | .4187 | 0 | 0 |
| -.4 | .4488 | 0 | 0 | .4011 | 0 | 0 | .3483 | 0 | 0 | .2973 | 0 | 0 |
| -.2 | .3124 | 0 | 0 | .2653 | 0 | 0 | .2107 | 0 | 0 | .1547 | 0 | 0 |
| 0 | .1556 | 0 | 0 | .1116 | 0 | 0 | .0582 | 0 | 0 | 0 | 0 | 0 |
| .2 | -.0107 | 0 | 0 | -.0493 | 0 | 0 | -.0980 | 0 | 0 | -.1547 | 0 | 0 |
| .4 | -.1754 | 0 | 0 | -.2050 | 0 | 0 | -.2457 | 0 | 0 | -.2973 | 0 | 0 |
| .6 | -.3253 | 0 | 0 | -.3449 | 0 | 0 | -.3745 | 0 | 0 | -.4187 | 0 | 0 |
| .9 | -.5072 | 0 | 0 | -.5083 | 0 | 0 | -.5197 | 0 | 0 | -.5511 | 0 | 0 |
| $\rho = 0.2$ | | | | | | | | | | | | |
| -0.9 | 0.6763 | 0.0418 | 0.0019 | 0.6341 | 0.0441 | 0.0023 | 0.5912 | 0.0453 | 0.0025 | 0.5547 | 0.0442 | 0.0029 |
| -.6 | .5537 | .0396 | .0031 | .5155 | .0398 | .0028 | .4658 | .0439 | 0 | .4222 | .0353 | 0 |
| -.4 | .4513 | .0346 | 0 | ------ | ------ | ------ | .3508 | .0336 | 0 | .3002 | .0280 | .0011 |
| -.3 | ------ | ------ | ------ | .3390 | .0303 | 0 | ------ | ------ | ------ | ------ | ------ | ------ |
| -.2 | .3149 | .0267 | 0 | ------ | ------ | ------ | .2128 | .0221 | 0 | .1564 | .0149 | 0 |
| -.1 | ------ | ------ | ------ | .1917 | .0185 | 0 | ------ | ------ | ------ | ------ | ------ | ------ |
| 0 | .1571 | .0167 | 0 | .1127 | .0126 | 0 | .0587 | .0081 | 0 | 0 | 0 | 0 |
| .1 | ------ | ------ | ------ | .0316 | .0062 | 0 | ------ | ------ | ------ | ------ | ------ | ------ |
| .2 | -.0113 | .0053 | 0 | ------ | ------ | ------ | -.0991 | -.0064 | 0 | -.1564 | -.0149 | 0 |
| .3 | ------ | ------ | ------ | -.1306 | -.0077 | 0 | ------ | ------ | ------ | ------ | ------ | ------ |
| .4 | -.1779 | -.0069 | 0 | ------ | ------ | ------ | -.2491 | -.0207 | 0 | -.3002 | -.0280 | -.0011 |
| .6 | -.3199 | -.0170 | -.0031 | -.3482 | -.0234 | -.0028 | -.3780 | -.0334 | 0 | -.4222 | -.0353 | 0 |
| .9 | -.5110 | -.0280 | -.0019 | -.5166 | -.0354 | -.0023 | -.5268 | -.0403 | -.0025 | -.5547 | -.0442 | -.0029 |
| $\rho = 0.5$ | | | | | | | | | | | | |
| -0.9 | 0.6930 | 0.1050 | 0.0167 | 0.6467 | 0.1111 | 0.0218 | ------ | ------ | ------ | ------ | ------ | ------ |
| -.7 | .6257 | .1021 | .0170 | ------ | ------ | ------ | ------ | ------ | ------ | ------ | ------ | ------ |
| -.6 | ------ | ------ | ------ | .5343 | .1047 | .0213 | 0.4847 | 0.1077 | 0.0221 | ------ | ------ | ------ |
| -.5 | .5299 | .0971 | .0157 | ------ | ------ | ------ | ------ | ------ | ------ | 0.3818 | 0.0882 | 0.0193 |
| -.4 | ------ | ------ | ------ | .4221 | .0108 | .0187 | ------ | ------ | ------ | ------ | ------ | ------ |
| -.3 | ------ | ------ | ------ | ------ | ------ | ------ | .2991 | .0759 | .0168 | ------ | ------ | ------ |
| -.2 | ------ | ------ | ------ | .2787 | .0667 | .0144 | ------ | ------ | ------ | .1653 | .0407 | .0091 |
| -.1 | ------ | ------ | ------ | ------ | ------ | ------ | .1442 | .0416 | .0092 | ------ | ------ | ------ |
| 0 | .1644 | .0544 | .0082 | .1180 | .0351 | .0090 | .0617 | .0221 | .0055 | 0 | 0 | 0 |
| .1 | ------ | ------ | ------ | ------ | ------ | ------ | -.0223 | .0021 | .0016 | ------ | ------ | ------ |
| .2 | ------ | ------ | ------ | -.0570 | -.0015 | .0021 | ------ | ------ | ------ | -.1653 | -.0407 | -.0091 |
| .3 | ------ | ------ | ------ | ------ | ------ | ------ | -.1659 | -.0377 | -.0076 | ------ | ------ | ------ |
| .4 | ------ | ------ | ------ | -.2189 | -.0375 | -.0049 | ------ | ------ | ------ | ------ | ------ | ------ |
| .5 | -.2690 | -.0317 | -.0038 | ------ | ------ | ------ | ------ | ------ | ------ | -.3818 | -.0882 | -.0193 |
| .6 | ------ | ------ | ------ | -.3654 | -.0667 | -.0100 | -.3959 | -.0828 | -.0143 | ------ | ------ | ------ |
| .7 | -.4145 | -.0588 | -.0063 | ------ | ------ | ------ | ------ | ------ | ------ | ------ | ------ | ------ |
| .9 | -.5302 | -.0748 | -.0091 | -.5312 | -.0942 | -.0131 | ------ | ------ | ------ | ------ | ------ | ------ |

NATIONAL ADVISORY
COMMITTEE FOR AERONAUTICS

TABLE III.- VALUES OF THE FUNCTIONS $F_m$ - Continued

| $\xi$ | $\sigma = 0.90$ | | | | | | | | | | | |
|---|---|---|---|---|---|---|---|---|---|---|---|---|
| | $\psi = 45°$ | | | $\psi = 30°$ | | | $\psi = 15°$ | | | $\psi = 0°$ | | |
| | $F_1$ | $F_2$ | $F_3$ | $F_1$ | $F_2$ | $F_3$ | $F_1$ | $F_2$ | $F_3$ | $F_1$ | $F_2$ | $F_3$ |
| $\rho = 0$ | | | | | | | | | | | | |
| -0.9 | 0.6128 | 0 | 0 | 0.5271 | 0 | 0 | 0.4659 | 0 | 0 | 0.4076 | 0 | 0 |
| -.6 | .5646 | 0 | 0 | .4725 | 0 | 0 | .3957 | 0 | 0 | .3157 | 0 | 0 |
| -.4 | .5019 | 0 | 0 | .4090 | 0 | 0 | .3206 | 0 | 0 | .2267 | 0 | 0 |
| -.2 | .4142 | 0 | 0 | .3214 | 0 | 0 | .2228 | 0 | 0 | .1162 | 0 | 0 |
| 0 | .3008 | 0 | 0 | .2117 | 0 | 0 | .1078 | 0 | 0 | 0 | 0 | 0 |
| .2 | .1697 | 0 | 0 | .0884 | 0 | 0 | -.0146 | 0 | 0 | -.1162 | 0 | 0 |
| .4 | .0270 | 0 | 0 | -.0403 | 0 | 0 | -.1340 | 0 | 0 | -.2267 | 0 | 0 |
| .6 | -.1133 | 0 | 0 | -.1620 | 0 | 0 | -.2397 | 0 | 0 | -.3157 | 0 | 0 |
| .9 | -.2970 | 0 | 0 | -.3110 | 0 | 0 | -.3589 | 0 | 0 | -.4076 | 0 | 0 |
| $\rho = 0.2$ | | | | | | | | | | | | |
| -0.9 | 0.6186 | 0.0594 | 0.0068 | 0.5325 | 0.0567 | 0.0074 | 0.4710 | 0.0507 | 0.0064 | 0.4136 | 0.0451 | 0.0016 |
| -.6 | .5676 | .0677 | .0105 | .4756 | .0652 | .0112 | .3988 | .0542 | .0087 | .3188 | .0412 | .0048 |
| -.4 | .5057 | .0717 | .0086 | ------ | ------ | ------ | .3268 | .0517 | .0071 | .2291 | .0319 | .0040 |
| -.3 | ------ | ------ | ------ | .3708 | .0661 | .0092 | ------ | ------ | ------ | ------ | ------ | ------ |
| -.2 | .4169 | .0702 | .0090 | ------ | ------ | ------ | .2250 | .0428 | .0062 | .1178 | .0176 | .0020 |
| -.1 | ------ | ------ | ------ | .2708 | .0622 | .0089 | ------ | ------ | ------ | ------ | ------ | ------ |
| 0 | .3033 | .0636 | .0090 | .2139 | .0532 | .0091 | .1088 | .0289 | .0051 | 0 | 0 | 0 |
| .1 | ------ | ------ | ------ | .1520 | .0432 | .0089 | ------ | ------ | ------ | ------ | ------ | ------ |
| .2 | .1705 | .0514 | .0090 | ------ | ------ | ------ | -.0154 | .0113 | .0031 | -.1178 | -.0176 | -.0020 |
| .3 | ------ | ------ | ------ | .0234 | .0286 | .0067 | ------ | ------ | ------ | ------ | ------ | ------ |
| .4 | .0270 | .0349 | .0064 | ------ | ------ | ------ | -.1395 | -.0061 | .0005 | -.2291 | -.0319 | -.0040 |
| .6 | -.1150 | -.0159 | .0071 | -.1644 | .0008 | .0060 | -.2426 | -.0211 | .0007 | -.3183 | -.0412 | -.0048 |
| .9 | -.3044 | -.0079 | .0024 | -.3177 | -.0200 | .0010 | -.3649 | -.0328 | -.0030 | -.4136 | -.0451 | -.0016 |
| $\rho = 0.5$ | | | | | | | | | | | | |
| -0.9 | 0.6278 | 0.1482 | 0.0314 | 0.5409 | 0.1416 | 0.0334 | ------ | ------ | ------ | ------ | ------ | ------ |
| -.7 | .6050 | .1662 | .0402 | ------ | ------ | ------ | ------ | ------ | ------ | ------ | ------ | ------ |
| -.6 | ------ | ------ | ------ | .4910 | .1656 | .0491 | 0.4152 | 0.1395 | 0.0431 | ------ | ------ | ------ |
| -.5 | .5372 | .1793 | .0531 | ------ | ------ | ------ | ------ | ------ | ------ | 0.2919 | 0.0994 | 0.0317 |
| -.4 | ------ | ------ | ------ | .4284 | .1727 | .0603 | ------ | ------ | ------ | ------ | ------ | ------ |
| -.3 | ------ | ------ | ------ | ------ | ------ | ------ | .2914 | .1271 | .0484 | ------ | ------ | ------ |
| -.2 | ------ | ------ | ------ | .3392 | .1654 | .0651 | ------ | ------ | ------ | .1283 | .0478 | .0169 |
| -.1 | ------ | ------ | ------ | ------ | ------ | ------ | .1755 | .0971 | .0420 | ------ | ------ | ------ |
| 0 | .3166 | .1656 | .0632 | .2247 | .1404 | .0626 | .1147 | .0767 | .0435 | 0 | 0 | 0 |
| .1 | ------ | ------ | ------ | ------ | ------ | ------ | .0467 | .0534 | .0284 | ------ | ------ | ------ |
| .2 | ------ | ------ | ------ | .0919 | .0987 | .0504 | ------ | ------ | ------ | -.1283 | -.0478 | -.0169 |
| .3 | ------ | ------ | ------ | ------ | ------ | ------ | -.0834 | .0036 | .0100 | ------ | ------ | ------ |
| .4 | ------ | ------ | ------ | -.0466 | .0400 | .0328 | ------ | ------ | ------ | ------ | ------ | ------ |
| .5 | -.0490 | .0646 | .0374 | ------ | ------ | ------ | ------ | ------ | ------ | -.2919 | -.0994 | -.0317 |
| .6 | ------ | ------ | ------ | -.1767 | -.0022 | .0130 | -.2576 | -.0586 | -.0125 | ------ | ------ | ------ |
| .7 | -.1943 | .0160 | .0154 | ------ | ------ | ------ | ------ | ------ | ------ | ------ | ------ | ------ |
| .9 | -.3105 | -.0275 | .0035 | -.3217 | -.0583 | -.0074 | ------ | ------ | ------ | ------ | ------ | ------ |

NATIONAL ADVISORY
COMMITTEE FOR AERONAUTICS

TABLE III.- VALUES OF THE FUNCTIONS $F_m$ - Continued

| $\xi$ | $\sigma = 0.45$ | | | | | | | | | | | |
|---|---|---|---|---|---|---|---|---|---|---|---|---|
| | $\psi = 45^\circ$ | | | $\psi = 30^\circ$ | | | $\psi = 15^\circ$ | | | $\psi = 0^\circ$ | | |
| | $F_1$ | $F_2$ | $F_3$ | $F_1$ | $F_2$ | $F_3$ | $F_1$ | $F_2$ | $F_3$ | $F_1$ | $F_2$ | $F_3$ |
| $\rho = 0.7$ | | | | | | | | | | | | |
| -0.9 | 0.7115 | 0.1493 | 0.0314 | 0.6659 | 0.1576 | 0.0305 | ------ | ------ | ------ | ------ | ------ | ------ |
| -.7 | .6477 | .1496 | .0346 | ------ | ------ | ------ | ------ | ------ | ------ | ------ | ------ | ------ |
| -.6 | ------ | ------ | ------ | .5576 | .1519 | .0434 | 0.5061 | 0.1583 | 0.0488 | ------ | ------ | ------ |
| -.5 | .5537 | .1417 | .0333 | ------ | ------ | ------ | ------ | ------ | ------ | 0.4038 | 0.1322 | 0.0411 |
| -.4 | ------ | ------ | ------ | .4447 | .1350 | .0405 | ------ | ------ | ------ | ------ | ------ | ------ |
| -.3 | ------ | ------ | ------ | ------ | ------ | ------ | .3179 | .1143 | .0377 | ------ | ------ | ------ |
| -.2 | ------ | ------ | ------ | .2977 | .1008 | .0318 | ------ | ------ | ------ | .1769 | .0618 | .0204 |
| -.1 | ------ | ------ | ------ | ------ | ------ | ------ | .1539 | .0637 | .0214 | ------ | ------ | ------ |
| 0 | .1741 | .0663 | .0189 | .1252 | .0531 | .0198 | .0653 | .0334 | .0127 | 0 | 0 | 0 |
| .1 | ------ | ------ | ------ | ------ | ------ | ------ | -.0246 | .0030 | .0035 | ------ | ------ | ------ |
| .2 | ------ | ------ | ------ | -.0585 | -.0033 | .0046 | ------ | ------ | ------ | -.1769 | -.0618 | -.0204 |
| .3 | ------ | ------ | ------ | ------ | ------ | ------ | -.1997 | -.0577 | -.0156 | ------ | ------ | ------ |
| .4 | ------ | ------ | ------ | -.2343 | -.0580 | -.0108 | ------ | ------ | ------ | ------ | ------ | ------ |
| .5 | -.2866 | -.0487 | -.0075 | ------ | ------ | ------ | ------ | ------ | ------ | -.4038 | -.1322 | -.0411 |
| .6 | ------ | ------ | ------ | -.3872 | -.1016 | -.0218 | -.4159 | -.1251 | -.0327 | ------ | ------ | ------ |
| .7 | -.4371 | -.0855 | -.0151 | ------ | ------ | ------ | ------ | ------ | ------ | ------ | ------ | ------ |
| .9 | -.5537 | -.1097 | -.0207 | -.5540 | -.1350 | -.0308 | ------ | ------ | ------ | ------ | ------ | ------ |
| $\rho = 0.9$ | | | | | | | | | | | | |
| -0.7 | ------ | ------ | ------ | ------ | ------ | ------ | 0.5859 | 0.2225 | 0.0835 | ------ | ------ | ------ |
| -.6 | ------ | ------ | ------ | 0.5905 | 0.2048 | 0.0739 | ------ | ------ | ------ | ------ | ------ | ------ |
| -.5 | ------ | ------ | ------ | ------ | ------ | ------ | ------ | ------ | ------ | 0.4367 | 0.1853 | 0.0756 |
| -.4 | 0.5273 | 0.1913 | 0.0549 | .4778 | .1968 | .0734 | .4224 | .1886 | .0780 | ------ | ------ | ------ |
| -.2 | ------ | ------ | ------ | .3231 | .1440 | .0600 | .2613 | .1295 | .0571 | .1951 | .0898 | .0387 |
| 0 | .1889 | .0930 | .0339 | .1363 | .0770 | .0364 | .0711 | .0485 | .0242 | 0 | 0 | 0 |
| .2 | ------ | ------ | ------ | -.0649 | -.0069 | .0062 | -.1270 | -.0421 | -.0138 | -.1951 | -.0898 | -.0387 |
| .4 | -.2206 | -.0431 | -.0069 | -.2581 | -.0852 | -.0216 | -.3064 | -.1210 | -.0444 | ------ | ------ | ------ |
| .5 | ------ | ------ | ------ | ------ | ------ | ------ | ------ | ------ | ------ | -.4367 | -.1853 | -.0756 |
| .6 | ------ | ------ | ------ | -.4201 | -.1463 | -.0416 | ------ | ------ | ------ | ------ | ------ | ------ |
| .7 | ------ | ------ | ------ | ------ | ------ | ------ | -.5082 | -.1939 | -.0679 | ------ | ------ | ------ |

NATIONAL ADVISORY
COMMITTEE FOR AERONAUTICS

TABLE III.- VALUES OF THE FUNTIONS $F_m$ - Concluded

| $\xi$ | $\sigma = 0.90$ | | | | | | | | | | | |
|---|---|---|---|---|---|---|---|---|---|---|---|---|
| | $\psi = 45°$ | | | $\psi = 30°$ | | | $\psi = 15°$ | | | $\psi = 0°$ | | |
| | $F_1$ | $F_2$ | $F_3$ | $F_1$ | $F_2$ | $F_3$ | $F_1$ | $F_2$ | $F_3$ | $F_1$ | $F_2$ | $F_3$ |
| $\rho = 0.7$ | | | | | | | | | | | | |
| -0.9 | 0.6424 | 0.2110 | 0.0635 | 0.5547 | 0.2017 | 0.0652 | ------ | ------ | ------ | ------ | ------ | ------ |
| -.7 | .6240 | .2360 | .0798 | ------ | ------ | ------ | ------ | ------ | ------ | ------ | ------ | ------ |
| -.6 | ------ | ------ | ------ | .5092 | .2367 | .0962 | 0.4339 | 0.2242 | 0.0870 | ------ | ------ | ------ |
| -.5 | .5784 | .2561 | .0990 | ------ | ------ | ------ | ------ | ------ | ------ | 0.3112 | 0.1510 | 0.0682 |
| -.4 | ------ | ------ | ------ | .4486 | .2507 | .1192 | ------ | ------ | ------ | ------ | ------ | ------ |
| -.3 | ------ | ------ | ------ | ------ | ------ | ------ | .3105 | .1911 | .1018 | ------ | ------ | ------ |
| -.2 | ------ | ------ | ------ | .3589 | .2435 | .1339 | ------ | ------ | ------ | .1390 | .0742 | .0376 |
| -.1 | ------ | ------ | ------ | ------ | ------ | ------ | .1906 | .1475 | .0898 | ------ | ------ | ------ |
| 0 | .3334 | .2436 | .1304 | .2389 | .2089 | .1307 | .1224 | .1154 | .0764 | 0 | 0 | 0 |
| .1 | ------ | ------ | ------ | ------ | ------ | ------ | .0512 | .0785 | .0588 | ------ | ------ | ------ |
| .2 | ------ | ------ | ------ | .0964 | .1463 | .1050 | ------ | ------ | ------ | -.1390 | -.0742 | -.0376 |
| .3 | ------ | ------ | ------ | ------ | ------ | ------ | -.0919 | .0008 | .0185 | ------ | ------ | ------ |
| .4 | ------ | ------ | ------ | -.0534 | .0662 | .0643 | ------ | ------ | ------ | ------ | ------ | ------ |
| .5 | -.0548 | .0911 | .0704 | ------ | ------ | ------ | ------ | ------ | ------ | -.3112 | -.1510 | -.0682 |
| .6 | ------ | ------ | ------ | -.1926 | -.0117 | .0213 | -.2745 | -.0717 | -.0306 | ------ | ------ | ------ |
| .7 | -.2104 | .0157 | .0314 | ------ | ------ | ------ | ------ | ------ | ------ | ------ | ------ | ------ |
| .9 | -.3413 | -.0460 | -.0003 | -.3522 | -.0903 | -.0205 | ------ | ------ | ------ | ------ | ------ | ------ |
| $\rho = 0.9$ | | | | | | | | | | | | |
| -0.7 | ------ | ------ | ------ | 0.5521 | 0.2956 | 0.1369 | 0.4867 | 0.2619 | 0.1279 | ------ | ------ | ------ |
| -.6 | 0.6342 | 0.3220 | 0.1457 | .5326 | .3132 | .1586 | ------ | ------ | ------ | ------ | ------ | ------ |
| -.5 | ------ | ------ | ------ | ------ | ------ | ------ | ------ | ------ | ------ | 0.3408 | 0.2160 | 0.1277 |
| -.4 | .5759 | .3488 | .1820 | .4781 | .3392 | .2032 | .3896 | .2822 | .1785 | ------ | ------ | ------ |
| -.2 | ------ | ------ | ------ | .3862 | .3383 | .2362 | .2787 | .2479 | .1805 | .1560 | .1103 | .0733 |
| 0 | .3581 | .3363 | .2296 | .2611 | .2934 | .2356 | .1256 | .1647 | .1405 | 0 | 0 | 0 |
| .2 | ------ | ------ | ------ | .1060 | .2021 | .1887 | -.0263 | .0503 | .0650 | -.1560 | -.1103 | -.0733 |
| .4 | .0259 | .1741 | .1556 | -.0636 | .0831 | .1080 | -.1800 | -.0622 | -.0124 | ------ | ------ | ------ |
| .5 | ------ | ------ | ------ | ------ | ------ | ------ | ------ | ------ | ------ | -.3408 | -.2160 | -.1277 |
| .6 | -.1518 | .0602 | .0812 | -.2157 | -.0309 | .0254 | ------ | ------ | ------ | ------ | ------ | ------ |
| .7 | ------ | ------ | ------ | -.2827 | -.0770 | -.0081 | -.3542 | -.1658 | -.0780 | ------ | ------ | ------ |

NATIONAL ADVISORY
COMMITTEE FOR AERONAUTICS

TABLE IV.- TUNNEL INDUCED VELOCITY PARAMETER $\frac{k x_0 v}{\Gamma \sigma \cos \psi}$ FOR VARIOUS VALUES OF $\eta$, $\xi$, $\sigma$, AND $\psi$

| | $\frac{k x_0 v}{\Gamma \sigma \cos \psi}$ | | | | | | | | | | | | | | | | | | | | | | | | | | | | | | |
|---|---|---|---|---|---|---|---|---|---|---|---|---|---|---|---|---|---|---|---|---|---|---|---|---|---|---|---|---|---|---|---|
| | $\sigma = 0$ | $\sigma = 0.25$ | | | | | | | $\sigma = 0.45$ | | | | | | | $\sigma = 0.70$ | | | | | | | $\sigma = 0.90$ (a) | | | | | | |
| $\xi$ \ $\psi$ | All | -45° | -30° | -15° | 0° | 15° | 30° | 45° | -45° | -30° | -15° | 0° | 15° | 30° | 45° | -45° | -30° | -15° | 0° | 15° | 30° | 45° | -45° | -30° | -15° | 0° | 15° | 30° | 45° |
| $\eta = 0$ | | | | | | | | | | | | | | | | | | | | | | | | | | | | | |
| -0.9 | 0.260 | 0.310 | 0.294 | 0.280 | 0.258 | 0.244 | 0.227 | 0.221 | 0.352 | 0.321 | 0.292 | 0.254 | 0.228 | 0.203 | 0.186 | 0.404 | 0.353 | 0.298 | 0.246 | 0.207 | 0.176 | 0.147 | 0.437 | 0.373 | 0.296 | 0.238 | 0.190 | 0.157 | 0.121 |
| -.8 | .318 | ----- | ----- | ----- | ----- | ----- | ----- | ----- | .419 | .382 | .347 | .308 | .277 | .249 | .222 | ----- | ----- | ----- | ----- | ----- | ----- | ----- | .52 | .45 | .35 | .28 | .23 | .20 | .15 |
| -.7 | .382 | ----- | ----- | ----- | ----- | ----- | ----- | ----- | .494 | .458 | .417 | .377 | .338 | .306 | .277 | ----- | ----- | ----- | ----- | ----- | ----- | ----- | .61 | .53 | .43 | .34 | .28 | .24 | .20 |
| -.6 | .454 | .522 | .502 | .480 | .453 | .430 | .408 | .395 | .580 | .540 | .497 | .449 | .409 | .373 | .346 | .650 | .585 | .511 | .441 | .381 | .334 | .290 | .702 | .616 | .515 | .432 | .359 | .305 | .251 |
| -.5 | .532 | ----- | ----- | ----- | ----- | ----- | ----- | ----- | .667 | .623 | .580 | .530 | .481 | .443 | .417 | ----- | ----- | ----- | ----- | ----- | ----- | ----- | .80 | .71 | .60 | .50 | .44 | .37 | .31 |
| -.4 | .617 | .696 | .674 | .648 | .616 | .589 | .563 | .545 | .761 | .718 | .668 | .613 | .565 | .522 | .488 | .842 | .770 | .687 | .606 | .535 | .474 | .421 | .902 | .807 | .697 | .599 | .510 | .439 | .373 |
| -.3 | .708 | ----- | ----- | ----- | ----- | ----- | ----- | ----- | .857 | .813 | .761 | .706 | .651 | .607 | .572 | ----- | ----- | ----- | ----- | ----- | ----- | ----- | 1.00 | .90 | .79 | .68 | .60 | .52 | .45 |
| -.2 | .802 | .888 | .863 | .836 | .802 | .771 | .742 | .722 | .957 | .912 | .859 | .800 | .746 | .695 | .656 | 1.043 | .969 | .886 | .798 | .716 | .641 | .579 | 1.106 | 1.011 | .899 | .795 | .691 | .601 | .522 |
| -.1 | .900 | ----- | ----- | ----- | ----- | ----- | ----- | ----- | 1.057 | 1.015 | .952 | .838 | .840 | .791 | .749 | ----- | ----- | ----- | ----- | ----- | ----- | ----- | 1.20 | 1.10 | 1.00 | .90 | .79 | .70 | .61 |
| 0 | 1.000 | 1.086 | 1.063 | 1.033 | 1.000 | .966 | .937 | .913 | 1.156 | 1.112 | 1.058 | 1.000 | .942 | .888 | .844 | 1.239 | 1.170 | 1.087 | 1.000 | .913 | .831 | .761 | 1.301 | 1.212 | 1.108 | 1.000 | .892 | .788 | .699 |
| .1 | 1.100 | ----- | ----- | ----- | ----- | ----- | ----- | ----- | 1.251 | 1.213 | 1.149 | 1.098 | 1.040 | .985 | .940 | ----- | ----- | ----- | ----- | ----- | ----- | ----- | 1.39 | 1.30 | 1.20 | 1.10 | 1.00 | .89 | .80 |
| .2 | 1.198 | 1.280 | 1.258 | 1.228 | 1.198 | 1.164 | 1.136 | 1.112 | 1.344 | 1.305 | 1.254 | 1.200 | 1.141 | 1.089 | 1.043 | 1.421 | 1.359 | 1.284 | 1.202 | 1.117 | 1.032 | .958 | 1.478 | 1.399 | 1.309 | 1.205 | 1.101 | .989 | .894 |
| .3 | 1.292 | ----- | ----- | ----- | ----- | ----- | ----- | ----- | 1.428 | 1.397 | 1.341 | 1.292 | 1.235 | 1.181 | 1.141 | ----- | ----- | ----- | ----- | ----- | ----- | ----- | 1.55 | 1.48 | 1.40 | 1.30 | 1.20 | 1.09 | 1.00 |
| .4 | 1.383 | 1.456 | 1.437 | 1.411 | 1.384 | 1.352 | 1.325 | 1.303 | 1.513 | 1.478 | 1.435 | 1.387 | 1.332 | 1.282 | 1.239 | 1.579 | 1.526 | 1.469 | 1.394 | 1.313 | 1.231 | 1.160 | 1.627 | 1.561 | 1.490 | 1.401 | 1.303 | 1.193 | 1.098 |
| .5 | 1.468 | ----- | ----- | ----- | ----- | ----- | ----- | ----- | 1.584 | 1.556 | 1.517 | 1.472 | 1.416 | 1.372 | 1.333 | ----- | ----- | ----- | ----- | ----- | ----- | ----- | 1.69 | 1.63 | 1.56 | 1.48 | 1.40 | 1.29 | 1.20 |
| .6 | 1.546 | 1.607 | 1.592 | 1.572 | 1.547 | 1.519 | 1.497 | 1.476 | 1.654 | 1.627 | 1.591 | 1.551 | 1.503 | 1.460 | 1.420 | 1.708 | 1.666 | 1.618 | 1.559 | 1.490 | 1.417 | 1.351 | 1.749 | 1.695 | 1.641 | 1.568 | 1.485 | 1.384 | 1.298 |
| .7 | 1.618 | ----- | ----- | ----- | ----- | ----- | ----- | ----- | 1.710 | 1.682 | 1.660 | 1.628 | 1.579 | 1.542 | 1.507 | ----- | ----- | ----- | ----- | ----- | ----- | ----- | 1.81 | 1.76 | 1.71 | 1.64 | 1.56 | 1.46 | 1.39 |
| .8 | 1.682 | ----- | ----- | ----- | ----- | ----- | ----- | ----- | 1.762 | 1.740 | 1.721 | 1.689 | 1.647 | 1.617 | 1.583 | ----- | ----- | ----- | ----- | ----- | ----- | ----- | 1.85 | 1.81 | 1.76 | 1.70 | 1.64 | 1.54 | 1.48 |
| .9 | 1.740 | 1.782 | 1.773 | 1.757 | 1.742 | 1.719 | 1.705 | 1.688 | 1.814 | 1.797 | 1.772 | 1.746 | 1.709 | 1.679 | 1.648 | 1.852 | 1.824 | 1.793 | 1.754 | 1.703 | 1.649 | 1.598 | 1.879 | 1.843 | 1.811 | 1.762 | 1.704 | 1.627 | 1.563 |
| $\eta = 0.2$ | | | | | | | | | | | | | | | | | | | | | | | | | | | | | |
| -0.9 | 0.257 | 0.314 | 0.296 | 0.282 | 0.262 | 0.244 | 0.228 | 0.224 | 0.367 | 0.381 | 0.301 | 0.263 | 0.231 | 0.205 | 0.188 | 0.439 | 0.380 | 0.319 | 0.262 | 0.214 | 0.179 | 0.146 | 0.494 | 0.420 | 0.328 | 0.259 | 0.200 | 0.160 | 0.119 |
| -.8 | .314 | ----- | ----- | ----- | ----- | ----- | ----- | ----- | .443 | .402 | .369 | .332 | .278 | .254 | .221 | ----- | ----- | ----- | ----- | ----- | ----- | ----- | .59 | .52 | .40 | .32 | .25 | .21 | .16 |
| -.7 | .376 | ----- | ----- | ----- | ----- | ----- | ----- | ----- | .535 | .484 | .444 | .400 | .352 | .319 | .300 | ----- | ----- | ----- | ----- | ----- | ----- | ----- | .70 | .61 | .49 | .40 | .32 | .26 | .21 |
| -.6 | .450 | .539 | .516 | .495 | .470 | .442 | .419 | .409 | .620 | .575 | .530 | .482 | .432 | .391 | .364 | .730 | .654 | .571 | .489 | .415 | .355 | .304 | .814 | .721 | .598 | .489 | .399 | .327 | .260 |
| -.5 | .529 | ----- | ----- | ----- | ----- | ----- | ----- | ----- | .712 | .676 | .628 | .577 | .518 | .473 | .434 | ----- | ----- | ----- | ----- | ----- | ----- | ----- | .93 | .84 | .71 | .60 | .48 | .41 | .32 |
| -.4 | .614 | .715 | ----- | .674 | .642 | .613 | ----- | .560 | .811 | .775 | .722 | .662 | .607 | .560 | .510 | .941 | ----- | .779 | .684 | .595 | ----- | .445 | 1.050 | .96 | .821 | .699 | .581 | .49 | .396 |
| -.3 | .705 | ----- | .797 | ----- | ----- | ----- | .675 | ----- | .920 | .878 | .808 | .769 | .707 | .647 | .601 | ----- | .989 | ----- | ----- | ----- | .609 | ----- | 1.17 | 1.082 | .95 | .82 | .69 | .578 | .48 |
| -.2 | .8008 | .920 | ----- | .876 | .840 | .807 | ----- | .743 | 1.026 | .986 | .939 | .873 | .810 | .752 | .690 | 1.171 | ----- | 1.019 | .915 | .811 | ----- | .621 | 1.294 | 1.21 | 1.084 | .950 | .811 | .69 | .567 |
| -.1 | .900 | ----- | 1.006 | ----- | ----- | ----- | .875 | ----- | 1.136 | 1.100 | 1.041 | .986 | .918 | .851 | .793 | ----- | 1.226 | ----- | ----- | ----- | .818 | ----- | 1.41 | 1.334 | 1.22 | 1.08 | .94 | .788 | .67 |
| 0 | 1.000 | 1.129 | 1.111 | 1.075 | 1.053 | 1.015 | .979 | .945 | 1.242 | 1.210 | 1.146 | 1.099 | 1.029 | .959 | .894 | 1.394 | 1.344 | 1.251 | 1.163 | 1.049 | .932 | .826 | 1.522 | 1.461 | 1.353 | 1.220 | 1.068 | .908 | .770 |
| .1 | 1.100 | ----- | 1.215 | ----- | ----- | ----- | 1.084 | ----- | 1.346 | 1.317 | 1.270 | 1.214 | 1.142 | 1.069 | 1.000 | ----- | 1.458 | ----- | ----- | ----- | 1.051 | ----- | 1.63 | 1.581 | 1.48 | 1.35 | 1.21 | 1.035 | .88 |
| .2 | 1.199 | 1.331 | ----- | 1.297 | 1.265 | 1.227 | ----- | 1.153 | 1.445 | 1.423 | 1.384 | 1.325 | 1.255 | 1.180 | 1.110 | 1.598 | ----- | 1.504 | 1.410 | 1.297 | ----- | 1.06 | 1.725 | 1.68 | 1.611 | 1.489 | 1.338 | 1.16 | .998 |
| .3 | 1.295 | ----- | 1.416 | ----- | ----- | ----- | 1.292 | ----- | 1.542 | 1.522 | 1.484 | 1.427 | 1.361 | 1.291 | 1.223 | ----- | 1.666 | ----- | ----- | ----- | 1.289 | ----- | 1.81 | 1.792 | 1.72 | 1.61 | 1.48 | 1.287 | 1.12 |
| .4 | 1.386 | 1.520 | ----- | 1.489 | 1.464 | 1.427 | ----- | 1.362 | 1.634 | 1.620 | 1.583 | 1.536 | 1.469 | 1.395 | 1.333 | 1.779 | ----- | 1.717 | 1.641 | 1.535 | ----- | 1.286 | 1.896 | 1.88 | 1.840 | 1.740 | 1.600 | 1.41 | 1.241 |
| .5 | 1.471 | ----- | ----- | ----- | ----- | ----- | ----- | ----- | 1.707 | 1.701 | 1.674 | 1.628 | 1.567 | 1.495 | 1.426 | ----- | ----- | ----- | ----- | ----- | ----- | ----- | 1.97 | 1.96 | 1.93 | 1.84 | 1.71 | 1.53 | 1.35 |
| .6 | 1.550 | 1.669 | 1.672 | 1.660 | 1.636 | 1.606 | 1.573 | 1.531 | 1.772 | 1.778 | 1.759 | 1.716 | 1.660 | 1.594 | 1.515 | 1.911 | 1.920 | 1.897 | 1.836 | 1.743 | 1.623 | 1.495 | 2.031 | 2.043 | 2.022 | 1.950 | 1.823 | 1.648 | 1.478 |
| .7 | 1.624 | ----- | ----- | ----- | ----- | ----- | ----- | ----- | 1.838 | 1.841 | 1.833 | 1.798 | 1.751 | 1.683 | 1.617 | ----- | ----- | ----- | ----- | ----- | ----- | ----- | 2.08 | 2.11 | 2.10 | 2.04 | 1.92 | 1.75 | 1.58 |
| .8 | 1.686 | ----- | ----- | ----- | ----- | ----- | ----- | ----- | 1.893 | 1.903 | 1.900 | 1.872 | 1.823 | 1.768 | 1.698 | ----- | ----- | ----- | ----- | ----- | ----- | ----- | 2.13 | 2.17 | 2.17 | 2.10 | 2.02 | 1.84 | 1.69 |
| .9 | 1.743 | 1.854 | 1.863 | 1.858 | 1.846 | 1.819 | 1.794 | 1.757 | 1.948 | 1.964 | 1.959 | 1.934 | 1.890 | 1.838 | 1.768 | 2.070 | 2.097 | 2.098 | 2.054 | 1.994 | 1.897 | 1.784 | 2.173 | 2.209 | 2.221 | 2.158 | 2.093 | 1.949 | 1.798 |

[a]Values given to three significant figures are calculated values; the others are interpolated values.

NATIONAL ADVISORY
COMMITTEE FOR AERONAUTICS

TABLE IV.- TUNNEL INDUCED VELOCITY PARAMETER $\frac{k_{wr_0w}}{\Gamma\sigma \cos\psi}$ - Continued

| | $\frac{k_{wr_0w}}{\Gamma\sigma \cos\psi}$ | | | | | | | | | | | | | | | | | | | | | | | | | | | | | |
|---|---|---|---|---|---|---|---|---|---|---|---|---|---|---|---|---|---|---|---|---|---|---|---|---|---|---|---|---|---|---|
| | $\sigma = 0$ | $\sigma = 0.25$ | | | | | | | $\sigma = 0.45$ | | | | | | | $\sigma = 0.70$ | | | | | | | $\sigma = 0.90$ (a) | | | | | | |
| $\xi \backslash \psi$ | All | -45° | -30° | -15° | 0° | 15° | 30° | 45° | -45° | -30° | -15° | 0° | 15° | 30° | 45° | -45° | -30° | -15° | 0° | 15° | 30° | 45° | -45° | -30° | -15° | 0° | 15° | 30° | 45° |
| $\eta = 0.5$ | | | | | | | | | | | | | | | | | | | | | | | | | | | | | | |
| -0.9 | 0.238 | 0.307 | 0.292 | ----- | ----- | ----- | 0.216 | 0.205 | 0.378 | 0.345 | ----- | ----- | ----- | 0.204 | 0.178 | 0.490 | 0.423 | ----- | ----- | ----- | 0.191 | 0.146 | 0.590 | 0.494 | ----- | ----- | ----- | 0.18 | 0.13 |
| -.8 | .294 | ----- | ----- | ----- | ----- | ----- | ----- | ----- | .461 | .421 | ----- | ----- | ----- | .260 | .228 | ----- | ----- | ----- | ----- | ----- | ----- | ----- | .72 | .61 | ----- | ----- | ----- | .26 | .16 |
| -.7 | .359 | .455 | ----- | ----- | ----- | ----- | ----- | .323 | .555 | .518 | ----- | ----- | ----- | .327 | .289 | .714 | ----- | ----- | ----- | ----- | ----- | .248 | .866 | .76 | ----- | ----- | ----- | .32 | .218 |
| -.6 | .431 | ----- | .527 | 0.508 | ----- | 0.446 | .417 | ----- | .660 | .623 | 0.578 | ----- | 0.456 | .405 | .361 | ----- | .773 | 0.670 | ----- | 0.467 | .390 | ----- | 1.02 | .917 | 0.742 | ----- | 0.473 | .377 | .28 |
| -.5 | .511 | .640 | ----- | ----- | 0.567 | ----- | ----- | .471 | .773 | .741 | .688 | .617 | .553 | .496 | .435 | .986 | ----- | ----- | .686 | ----- | ----- | .388 | 1.194 | 1.10 | .91 | .746 | .60 | .47 | .352 |
| -.4 | .599 | ----- | .730 | ----- | ----- | ----- | .595 | ----- | .898 | .862 | .816 | .719 | .660 | .592 | .519 | ----- | 1.071 | ----- | ----- | ----- | .587 | ----- | 1.36 | 1.278 | 1.11 | .89 | .74 | .583 | .44 |
| -.3 | .693 | ----- | ----- | .818 | ----- | .737 | ----- | ----- | 1.024 | .999 | .941 | .868 | .780 | .700 | .614 | ----- | ----- | 1.128 | ----- | .847 | ----- | ----- | 1.53 | 1.48 | 1.311 | 1.10 | .914 | .71 | .53 |
| -.2 | .792 | ----- | .958 | ----- | .897 | ----- | .808 | ----- | 1.158 | 1.126 | 1.061 | 1.001 | .918 | .823 | .724 | ----- | 1.396 | ----- | 1.165 | ----- | .844 | ----- | 1.69 | 1.674 | 1.54 | 1.335 | 1.12 | .863 | .64 |
| -.1 | .895 | ----- | ----- | 1.058 | ----- | .969 | ----- | ----- | 1.284 | 1.266 | 1.223 | 1.145 | 1.046 | .948 | .842 | ----- | ----- | 1.487 | ----- | 1.176 | ----- | ----- | 1.85 | 1.87 | 1.762 | 1.57 | 1.319 | 1.04 | .77 |
| 0 | 1.000 | 1.210 | 1.201 | 1.182 | 1.143 | 1.092 | 1.039 | .980 | 1.416 | 1.404 | 1.367 | 1.290 | 1.189 | 1.080 | .962 | 1.725 | 1.730 | 1.673 | 1.538 | 1.334 | 1.145 | .940 | 2.012 | 2.066 | 2.004 | 1.818 | 1.539 | 1.211 | .921 |
| .1 | 1.105 | ----- | ----- | 1.305 | ----- | 1.215 | ----- | ----- | 1.529 | 1.533 | 1.509 | 1.437 | 1.333 | 1.217 | 1.098 | ----- | ----- | 1.848 | ----- | 1.538 | ----- | ----- | 2.13 | 2.24 | 2.219 | 2.06 | 1.776 | 1.41 | 1.08 |
| .2 | 1.208 | ----- | 1.431 | ----- | 1.389 | ----- | 1.280 | ----- | 1.641 | 1.658 | 1.640 | 1.580 | 1.474 | 1.354 | 1.231 | ----- | 2.085 | ----- | 1.911 | ----- | 1.476 | ----- | 2.25 | 2.414 | 2.42 | 2.301 | 2.00 | 1.603 | 1.24 |
| .3 | 1.307 | ----- | ----- | 1.538 | ----- | 1.456 | ----- | ----- | 1.743 | 1.780 | 1.776 | 1.715 | 1.615 | 1.496 | 1.359 | ----- | ----- | 2.176 | ----- | 1.895 | ----- | ----- | 2.37 | 2.56 | 2.624 | 2.52 | 2.227 | 1.80 | 1.41 |
| .4 | 1.401 | ----- | 1.646 | ----- | ----- | ----- | 1.510 | ----- | 1.849 | 1.892 | 1.894 | 1.842 | 1.718 | 1.622 | 1.480 | ----- | 2.285 | ----- | ----- | ----- | 1.804 | ----- | 2.48 | 2.694 | 2.80 | 2.72 | 2.43 | 1.999 | 1.58 |
| .5 | 1.489 | 1.722 | ----- | ----- | 1.719 | ----- | ----- | 1.552 | 1.943 | 1.995 | 2.000 | 1.963 | 1.862 | 1.742 | 1.605 | 2.272 | ----- | ----- | 2.388 | ----- | ----- | 1.677 | 2.582 | 2.80 | 2.94 | 2.850 | 2.62 | 2.18 | 1.739 |
| .6 | 1.569 | ----- | 1.825 | 1.830 | ----- | 1.767 | 1.714 | ----- | 2.020 | 2.079 | 2.100 | ----- | 1.978 | 1.851 | 1.713 | ----- | 2.482 | 2.554 | ----- | 2.351 | 2.101 | ----- | 2.65 | 2.900 | 3.065 | ----- | 2.796 | 2.360 | 1.90 |
| .7 | 1.641 | 1.872 | ----- | ----- | ----- | ----- | ----- | 1.737 | 2.089 | 2.158 | ----- | ----- | ----- | 1.966 | 1.824 | 2.410 | ----- | ----- | ----- | ----- | ----- | 1.950 | 2.715 | 2.99 | ----- | ----- | ----- | 2.51 | 2.067 |
| .8 | 1.706 | ----- | ----- | ----- | ----- | ----- | ----- | ----- | 2.144 | 2.224 | ----- | ----- | ----- | 2.059 | 1.918 | ----- | ----- | ----- | ----- | ----- | ----- | ----- | 2.76 | 3.05 | ----- | ----- | ----- | 2.66 | 2.21 |
| .9 | 1.762 | 1.986 | 2.024 | ----- | ----- | ----- | 1.950 | 1.885 | 2.201 | 2.281 | ----- | ----- | ----- | 2.140 | 2.000 | 2.513 | 2.682 | ----- | ----- | ----- | 2.449 | 2.174 | 2.808 | 3.093 | ----- | ----- | ----- | 2.783 | 2.344 |
| $\eta = 0.7$ | | | | | | | | | | | | | | | | | | | | | | | | | | | | | | |
| -0.9 | 0.213 | 0.288 | 0.275 | ----- | ----- | ----- | 0.205 | 0.187 | 0.373 | 0.341 | ----- | ----- | ----- | 0.199 | 0.165 | 0.517 | 0.445 | ----- | ----- | ----- | 0.190 | 0.140 | 0.652 | 0.541 | ----- | ----- | ----- | 0.183 | 0.122 |
| -.8 | .264 | ----- | ----- | ----- | ----- | ----- | ----- | ----- | .464 | .426 | ----- | ----- | ----- | .251 | .213 | ----- | ----- | ----- | ----- | ----- | ----- | ----- | .81 | .69 | ----- | ----- | ----- | .25 | .17 |
| -.7 | .332 | .444 | ----- | ----- | ----- | ----- | ----- | .298 | .568 | .533 | ----- | ----- | ----- | .327 | .274 | .765 | ----- | ----- | ----- | ----- | ----- | .248 | 1.006 | .88 | ----- | ----- | ----- | .34 | .289 |
| -.6 | .405 | ----- | .522 | 0.504 | ----- | 0.435 | .404 | ----- | .683 | .649 | 0.603 | ----- | 0.464 | .407 | .346 | ----- | .864 | 0.750 | ----- | 0.509 | .416 | ----- | 1.21 | 1.088 | 0.880 | ----- | 0.554 | .428 | .32 |
| -.5 | .487 | .641 | ----- | ----- | 0.569 | ----- | ----- | .451 | .813 | .782 | .728 | 0.649 | .570 | .504 | .427 | 1.113 | ----- | ----- | 0.734 | ----- | ----- | .404 | 1.429 | 1.33 | 1.11 | 0.896 | .70 | .56 | .389 |
| -.4 | .577 | ----- | .744 | ----- | ----- | ----- | .589 | ----- | .963 | .926 | .879 | .783 | .695 | .609 | .531 | ----- | 1.245 | ----- | ----- | ----- | .650 | ----- | 1.65 | 1.596 | 1.40 | 1.12 | .91 | .700 | .49 |
| -.3 | .675 | ----- | ----- | .846 | ----- | .750 | ----- | ----- | 1.119 | 1.080 | 1.031 | .940 | .834 | .738 | .639 | ----- | ----- | 1.350 | ----- | .967 | ----- | ----- | 1.88 | 1.88 | 1.709 | 1.43 | 1.178 | .88 | .61 |
| -.2 | .780 | ----- | 1.000 | ----- | .934 | ----- | .820 | ----- | 1.287 | 1.245 | 1.200 | 1.105 | .992 | .871 | .758 | ----- | 1.680 | ----- | 1.421 | ----- | .972 | ----- | 2.10 | 2.181 | 2.04 | 1.829 | 1.50 | 1.097 | .74 |
| -.1 | .889 | ----- | ----- | 1.115 | ----- | 1.011 | ----- | ----- | 1.410 | 1.417 | 1.370 | 1.280 | 1.154 | 1.022 | .890 | ----- | ----- | 1.847 | ----- | 1.441 | ----- | ----- | 2.31 | 2.48 | 2.463 | 2.23 | 1.846 | 1.34 | .92 |
| 0 | 1.000 | 1.264 | 1.271 | 1.256 | 1.212 | 1.148 | 1.079 | 1.01 | 1.546 | 1.573 | 1.549 | 1.460 | 1.326 | 1.177 | 1.027 | 2.017 | 2.121 | 2.112 | 1.961 | 1.693 | 1.370 | 1.060 | 2.511 | 2.779 | 2.868 | 2.703 | 2.240 | 1.622 | 1.096 |
| .1 | 1.111 | ----- | ----- | 1.394 | ----- | 1.290 | ----- | ----- | 1.681 | 1.727 | 1.720 | 1.638 | 1.505 | 1.342 | 1.161 | ----- | ----- | 2.352 | ----- | 1.955 | ----- | ----- | 2.68 | 3.06 | 3.262 | 3.15 | 2.646 | 1.93 | 1.31 |
| .2 | 1.220 | ----- | 1.532 | ----- | 1.491 | ----- | 1.351 | ----- | 1.817 | 1.879 | 1.882 | 1.815 | 1.678 | 1.506 | 1.337 | ----- | 2.516 | ----- | 2.496 | ----- | 1.810 | ----- | 2.82 | 3.304 | 3.62 | 3.576 | 3.03 | 2.220 | 1.52 |
| .3 | 1.325 | ----- | ----- | 1.655 | ----- | 1.560 | ----- | ----- | 1.939 | 2.020 | 2.041 | 1.979 | 1.844 | 1.665 | 1.479 | ----- | ----- | 2.813 | ----- | 2.446 | ----- | ----- | 2.98 | 3.52 | 3.931 | 3.97 | 3.40 | 2.52 | 1.74 |
| .4 | 1.423 | ----- | 1.764 | ----- | ----- | ----- | 1.609 | ----- | 2.050 | 2.141 | 2.179 | 2.133 | 2.001 | 1.824 | 1.620 | ----- | 2.835 | ----- | ----- | ----- | 2.241 | ----- | 3.11 | 3.702 | 4.20 | 4.26 | 3.71 | 2.806 | 1.96 |
| .5 | 1.513 | 1.826 | ----- | ----- | 1.858 | ----- | ----- | 1.636 | 2.146 | 2.251 | 2.302 | 2.271 | 2.147 | 1.964 | 1.760 | 2.667 | ----- | ----- | 3.138 | ----- | ----- | 1.962 | 3.217 | 3.86 | 4.40 | 4.509 | 3.99 | 3.07 | 2.177 |
| .6 | 1.595 | ----- | 1.951 | 1.973 | ----- | 1.904 | 1.832 | ----- | 2.231 | 2.344 | 2.411 | ----- | 2.272 | 2.101 | 1.880 | ----- | 3.065 | 3.287 | ----- | 3.039 | 2.818 | ----- | 3.31 | 3.973 | 4.555 | ----- | 4.289 | 3.314 | 2.38 |
| .7 | 1.668 | 1.980 | ----- | ----- | ----- | ----- | ----- | 1.834 | 2.299 | 2.423 | ----- | ----- | ----- | 2.220 | 2.005 | 2.839 | ----- | ----- | ----- | ----- | ----- | 2.289 | 3.378 | 4.07 | ----- | ----- | ----- | 3.53 | 2.601 |
| .8 | 1.736 | ----- | ----- | ----- | ----- | ----- | ----- | ----- | 2.358 | 2.496 | ----- | ----- | ----- | 2.321 | 2.103 | ----- | ----- | ----- | ----- | ----- | ----- | ----- | 3.44 | 4.15 | ----- | ----- | ----- | 3.72 | 2.78 |
| .9 | 1.787 | 2.095 | 2.152 | ----- | ----- | ----- | 2.080 | 1.99 | 2.408 | 2.552 | ----- | ----- | ----- | 2.410 | 2.200 | 2.924 | 3.286 | ----- | ----- | ----- | 3.032 | 2.555 | 3.484 | 4.219 | ----- | ----- | ----- | 3.86 | 2.955 |

[a]Values given to three significant figures are calculated values; the others are interpolated values.

NATIONAL ADVISORY
COMMITTEE FOR AERONAUTICS

TABLE IV.- TUNNEL INDUCED VELOCITY PARAMETER $\frac{4\pi r_0 w}{\Gamma\sigma \cos\psi}$ - Continued

| | $\frac{4\pi r_0 w}{\Gamma\sigma \cos\psi}$ | | | | | | | | | | | | | | | | | | | | | | | | | | | | |
|---|---|---|---|---|---|---|---|---|---|---|---|---|---|---|---|---|---|---|---|---|---|---|---|---|---|---|---|---|---|
| | $\sigma = 0$ | $\sigma = 0.25$ | | | | | | | $\sigma = 0.45$ | | | | | | | $\sigma = 0.70$ | | | | | | | $\sigma = 0.90$ (a) | | | | | | |
| $\eta$ \ $\psi$ | All | -45° | -30° | -15° | 0° | 15° | 30° | 45° | -45° | -30° | -15° | 0° | 15° | 30° | 45° | -45° | -30° | -15° | 0° | 15° | 30° | 45° | -45° | -30° | -15° | 0° | 15° | 30° | 45° |
| $\eta = 0.9$ | | | | | | | | | | | | | | | | | | | | | | | | | | | | | |
| -0.9 | 0.184 | ----- | ----- | ----- | ----- | ----- | ----- | ----- | ----- | ----- | ----- | ----- | ----- | ----- | ----- | ----- | ----- | ----- | ----- | ----- | ----- | ----- | ----- | ----- | ----- | ----- | ----- | ----- | ----- |
| -.8 | .237 | ----- | ----- | ----- | ----- | ----- | ----- | ----- | ----- | ----- | ----- | ----- | ----- | ----- | ----- | ----- | ----- | ----- | ----- | ----- | ----- | ----- | ----- | ----- | ----- | ----- | ----- | ----- | ----- |
| -.7 | .300 | ----- | ----- | 0.391 | ----- | 0.331 | ----- | ----- | ----- | ----- | 0.485 | ----- | 0.364 | ----- | ----- | ----- | ----- | 0.633 | ----- | 0.420 | ----- | ----- | ----- | 0.997 | 0.760 | ----- | 0.482 | 0.380 | ----- |
| -.6 | .373 | ----- | 0.506 | ----- | ----- | ----- | 0.382 | ----- | ----- | 0.663 | .621 | ----- | .46 | 0.40 | ----- | ----- | 0.957 | ----- | ----- | ----- | 0.447 | ----- | 1.437 | 1.293 | 1.06 | ----- | .68 | .510 | 0.345 |
| -.5 | .456 | ----- | ----- | ----- | 0.562 | ----- | ----- | ----- | ----- | .821 | .773 | 0.676 | .582 | .500 | ----- | ----- | ----- | ----- | 0.870 | ----- | ----- | ----- | 1.74 | 1.64 | 1.40 | 1.088 | .90 | .66 | .45 |
| -.4 | .549 | 0.757 | .751 | .730 | ----- | .628 | .576 | 0.514 | 1.006 | .994 | .940 | .835 | .723 | .621 | 0.511 | 1.486 | 1.463 | 1.332 | ----- | .916 | .720 | 0.537 | 2.051 | 2.034 | 1.796 | 1.48 | 1.200 | .856 | .589 |
| -.3 | .652 | ----- | ----- | ----- | ----- | ----- | ----- | ----- | 1.188 | 1.184 | 1.136 | 1.014 | .895 | .760 | .622 | ----- | ----- | ----- | ----- | ----- | ----- | ----- | 2.36 | 2.51 | 2.36 | 2.04 | 1.64 | 1.17 | .76 |
| -.2 | .763 | ----- | 1.041 | 1.023 | .968 | .901 | .824 | ----- | 1.370 | 1.382 | 1.344 | 1.222 | 1.079 | .921 | .758 | ----- | 2.078 | 2.027 | 1.796 | 1.495 | 1.157 | ----- | 2.68 | 3.025 | 3.074 | 2.826 | 2.278 | 1.568 | .96 |
| -.1 | .880 | ----- | ----- | ----- | ----- | ----- | ----- | ----- | 1.542 | 1.593 | 1.571 | 1.444 | 1.282 | 1.098 | .911 | ----- | ----- | ----- | ----- | ----- | ----- | ----- | 2.96 | 3.57 | 4.01 | 3.92 | 3.12 | 2.02 | 1.19 |
| 0 | 1.000 | 1.333 | 1.352 | 1.341 | 1.290 | 1.210 | 1.118 | 1.028 | 1.717 | 1.790 | 1.785 | 1.681 | 1.499 | 1.291 | 1.085 | 2.430 | 2.723 | 2.850 | 2.703 | 2.265 | 1.721 | 1.222 | 3.264 | 4.140 | 5.026 | 5.265 | 4.165 | 2.560 | 1.417 |
| .1 | 1.120 | ----- | ----- | ----- | ----- | ----- | ----- | ----- | 1.878 | 1.982 | 2.002 | 1.914 | 1.720 | 1.492 | 1.261 | ----- | ----- | ----- | ----- | ----- | ----- | ----- | 3.48 | 4.87 | 6.08 | 6.59 | 5.20 | 3.02 | 1.70 |
| .2 | 1.237 | ----- | 1.647 | 1.652 | 1.616 | 1.532 | 1.431 | ----- | 2.028 | 2.159 | 2.206 | 2.139 | 1.941 | 1.698 | 1.442 | ----- | 3.284 | 3.623 | 3.578 | 3.059 | 2.354 | ----- | 3.51 | 5.132 | 6.912 | 7.700 | 6.117 | 3.674 | 2.00 |
| .3 | 1.348 | ----- | ----- | ----- | ----- | ----- | ----- | ----- | 2.167 | 2.320 | 2.393 | 2.346 | 2.146 | 1.856 | 1.622 | ----- | ----- | ----- | ----- | ----- | ----- | ----- | 3.72 | 5.50 | 7.54 | 8.51 | 6.84 | 4.20 | 2.31 |
| .4 | 1.451 | 1.847 | 1.900 | 1.926 | ----- | 1.829 | 1.726 | 1.610 | 2.292 | 2.460 | 2.562 | 2.524 | 2.345 | 2.087 | 1.796 | 3.104 | 3.698 | 4.186 | ----- | 3.729 | 2.949 | 2.135 | 4.092 | 5.800 | 7.991 | 9.05 | 7.395 | 4.652 | 2.630 |
| .5 | 1.544 | ----- | ----- | ----- | 2.026 | ----- | ----- | ----- | ----- | 2.578 | 2.707 | 2.685 | 2.520 | 2.261 | ----- | ----- | ----- | ----- | 4.478 | ----- | ----- | ----- | 4.22 | 6.03 | 8.25 | 9.438 | 7.770 | 5.07 | 2.94 |
| .6 | 1.627 | ----- | 2.097 | ----- | ----- | ----- | 1.975 | ----- | ----- | 2.679 | 2.834 | ----- | 2.670 | 2.417 | ----- | ----- | 3.968 | ----- | ----- | ----- | 3.448 | ----- | 4.337 | 6.190 | 8.41 | ----- | 8.04 | 5.407 | 3.245 |
| .7 | 1.700 | ----- | ----- | 2.229 | ----- | 2.174 | ----- | ----- | ----- | ----- | 2.925 | ----- | 2.803 | ----- | ----- | ----- | ----- | 4.656 | ----- | 4.409 | ----- | ----- | ----- | 6.321 | 8.463 | ----- | 8.184 | 5.704 | ----- |
| .8 | 1.763 | ----- | ----- | ----- | ----- | ----- | ----- | ----- | ----- | ----- | ----- | ----- | ----- | ----- | ----- | ----- | ----- | ----- | ----- | ----- | ----- | ----- | ----- | ----- | ----- | ----- | ----- | ----- | ----- |
| .9 | 1.826 | ----- | ----- | ----- | ----- | ----- | ----- | ----- | ----- | ----- | ----- | ----- | ----- | ----- | ----- | ----- | ----- | ----- | ----- | ----- | ----- | ----- | ----- | ----- | ----- | ----- | ----- | ----- | ----- |
| $\eta = -0.2$ | | | | | | | | | | | | | | | | | | | | | | | | | | | | | |
| -0.9 | 0.257 | 0.298 | 0.280 | 0.267 | 0.248 | 0.232 | 0.216 | 0.218 | 0.331 | 0.297 | 0.270 | 0.239 | 0.211 | 0.188 | 0.179 | 0.364 | 0.316 | 0.267 | 0.226 | 0.186 | 0.159 | 0.136 | 0.380 | 0.326 | 0.259 | 0.215 | 0.167 | 0.140 | 0.109 |
| -.8 | .314 | ----- | ----- | ----- | ----- | ----- | ----- | ----- | .398 | .360 | .323 | .287 | .261 | .232 | .225 | ----- | ----- | ----- | ----- | ----- | ----- | ----- | .46 | .39 | .31 | .27 | .22 | .17 | .14 |
| -.7 | .376 | ----- | ----- | ----- | ----- | ----- | ----- | ----- | .472 | .431 | .390 | .347 | .323 | .285 | .279 | ----- | ----- | ----- | ----- | ----- | ----- | ----- | .53 | .46 | .37 | .32 | .28 | .22 | .18 |
| -.6 | .450 | .507 | .480 | .463 | .433 | .419 | .391 | .393 | .550 | .501 | .467 | .418 | .389 | .350 | .339 | .595 | .524 | .461 | .398 | .349 | .306 | .275 | .617 | .538 | .450 | .380 | .318 | .275 | .230 |
| -.5 | .529 | ----- | ----- | ----- | ----- | ----- | ----- | ----- | .631 | .582 | .541 | .490 | .460 | .417 | .400 | ----- | ----- | ----- | ----- | ----- | ----- | ----- | .70 | .62 | .51 | .45 | .38 | .32 | .29 |
| -.4 | .614 | .671 | ----- | .620 | .590 | .568 | ----- | .532 | .713 | .667 | .618 | .569 | .529 | .490 | .468 | .759 | ----- | .608 | .542 | .482 | ----- | .396 | .787 | .70 | .595 | .521 | .446 | .40 | .346 |
| -.3 | .705 | ----- | .736 | ----- | ----- | ----- | .626 | ----- | .804 | .755 | .703 | .651 | .611 | .569 | .547 | ----- | .773 | ----- | ----- | ----- | .508 | ----- | .87 | .780 | .68 | .60 | .52 | .465 | .41 |
| .2 | .801 | .855 | ----- | .797 | .765 | .739 | ----- | .699 | .895 | .842 | .791 | .738 | .693 | .652 | .624 | .938 | ----- | .779 | .706 | .640 | ----- | .540 | .965 | .87 | .766 | .681 | .601 | .54 | .482 |
| -.1 | .900 | ----- | .921 | ----- | ----- | ----- | .802 | ----- | .987 | .935 | .881 | .824 | .779 | .736 | .712 | ----- | .947 | ----- | ----- | ----- | .667 | ----- | 1.05 | .954 | .84 | .76 | .68 | .618 | .56 |
| 0 | 1.000 | 1.047 | 1.018 | .984 | .952 | .923 | .898 | .884 | 1.081 | 1.028 | .971 | .917 | .869 | .808 | .800 | 1.115 | 1.034 | .958 | .877 | .810 | .750 | .705 | 1.136 | 1.035 | .937 | .847 | .767 | .695 | .638 |
| .1 | 1.100 | ----- | 1.114 | ----- | ----- | ----- | .995 | ----- | 1.166 | 1.119 | 1.061 | 1.008 | .959 | .920 | .890 | ----- | 1.118 | ----- | ----- | ----- | .837 | ----- | 1.21 | 1.112 | 1.02 | .92 | .85 | .777 | .73 |
| .2 | 1.199 | 1.234 | ----- | 1.169 | 1.140 | 1.110 | ----- | 1.076 | 1.257 | 1.204 | 1.147 | 1.097 | 1.049 | 1.010 | .985 | 1.280 | ----- | 1.122 | 1.049 | .984 | ----- | .883 | 1.293 | 1.19 | 1.103 | 1.014 | .938 | .85 | .809 |
| .3 | 1.295 | ----- | 1.291 | ----- | ----- | ----- | 1.180 | ----- | 1.337 | 1.286 | 1.223 | 1.181 | 1.137 | 1.100 | 1.075 | ----- | 1.276 | ----- | ----- | ----- | 1.012 | ----- | 1.36 | 1.266 | 1.18 | 1.08 | 1.03 | .950 | .90 |
| .4 | 1.386 | 1.402 | ----- | 1.339 | 1.315 | 1.285 | ----- | 1.259 | 1.413 | 1.367 | 1.310 | 1.266 | 1.222 | 1.188 | 1.167 | 1.423 | ----- | 1.282 | 1.212 | 1.158 | ----- | 1.063 | 1.489 | 1.33 | 1.267 | 1.174 | 1.118 | 1.02 | .987 |
| .5 | 1.471 | ----- | ----- | ----- | ----- | ----- | ----- | ----- | 1.480 | 1.440 | 1.381 | 1.342 | 1.297 | 1.274 | 1.251 | ----- | ----- | ----- | ----- | ----- | ----- | ----- | 1.48 | 1.39 | 1.32 | 1.24 | 1.19 | 1.11 | 1.08 |
| .6 | 1.550 | 1.544 | 1.526 | 1.490 | 1.471 | 1.443 | 1.437 | 1.421 | 1.542 | 1.505 | 1.451 | 1.416 | 1.373 | 1.354 | 1.330 | 1.542 | 1.478 | 1.411 | 1.357 | 1.301 | 1.261 | 1.229 | 1.544 | 1.455 | 1.386 | 1.314 | 1.254 | 1.192 | 1.157 |
| .7 | 1.624 | ----- | ----- | ----- | ----- | ----- | ----- | ----- | 1.600 | 1.567 | 1.516 | 1.486 | 1.442 | 1.430 | 1.412 | ----- | ----- | ----- | ----- | ----- | ----- | ----- | 1.59 | 1.50 | 1.44 | 1.38 | 1.32 | 1.26 | 1.25 |
| .8 | 1.686 | ----- | ----- | ----- | ----- | ----- | ----- | ----- | 1.653 | 1.621 | 1.576 | 1.543 | 1.511 | 1.500 | 1.483 | ----- | ----- | ----- | ----- | ----- | ----- | ----- | 1.63 | 1.55 | 1.49 | 1.44 | 1.39 | 1.34 | 1.32 |
| .9 | 1.743 | 1.719 | 1.701 | 1.676 | 1.653 | 1.639 | 1.636 | 1.630 | 1.701 | 1.667 | 1.629 | 1.595 | 1.569 | 1.558 | 1.550 | 1.681 | 1.624 | 1.575 | 1.538 | 1.495 | 1.469 | 1.459 | 1.666 | 1.590 | 1.536 | 1.503 | 1.445 | 1.404 | 1.394 |

[a]Values given to three significant figures are calculated values; the others are interpolated values.

NATIONAL ADVISORY
COMMITTEE FOR AERONAUTICS

TABLE IV.- TUNNEL INDUCED VELOCITY PARAMETER $\frac{4\pi r_0 w}{\Gamma\sigma \cos\psi}$ - Continued

| | $\frac{4\pi r_0 w}{\Gamma\sigma \cos\psi}$ | | | | | | | | | | | | | | | | | | | | | | | | | | | | |
|---|---|---|---|---|---|---|---|---|---|---|---|---|---|---|---|---|---|---|---|---|---|---|---|---|---|---|---|---|---|
| | $\sigma = 0$ | $\sigma = 0.25$ | | | | | | | $\sigma = 0.45$ | | | | | | | $\sigma = 0.70$ | | | | | | | $\sigma = 0.90$ (a) | | | | | | |
| $\xi$ \ $\psi$ | All | -45° | -30° | -15° | 0° | 15° | 30° | 45° | -45° | -30° | -15° | 0° | 15° | 30° | 45° | -45° | -30° | -15° | 0° | 15° | 30° | 45° | -45° | -30° | -15° | 0° | 15° | 30° | 45° |
| $\eta = -0.5$ | | | | | | | | | | | | | | | | | | | | | | | | | | | | | |
| -0.9 | 0.238 | 0.270 | 0.257 | ----- | ----- | ----- | 0.188 | 0.191 | 0.293 | 0.267 | ----- | ----- | ----- | 0.159 | 0.152 | 0.310 | 0.271 | ----- | ----- | ----- | 0.132 | 0.113 | 0.313 | 0.268 | ----- | ----- | ----- | 0.116 | 0.090 |
| -.8 | .294 | ----- | ----- | ----- | ----- | ----- | ----- | ----- | .352 | .320 | ----- | ----- | ----- | .200 | .198 | ----- | ----- | ----- | ----- | ----- | ----- | ----- | .37 | .32 | ----- | ----- | ----- | .16 | .12 |
| -.7 | .359 | .395 | ----- | ----- | ----- | ----- | ----- | .292 | .419 | .380 | ----- | ----- | ----- | .252 | .240 | .435 | ----- | ----- | ----- | ----- | ----- | .186 | .436 | .38 | ----- | ----- | ----- | .19 | .153 |
| -.6 | .431 | ----- | .443 | 0.421 | ----- | 0.377 | .353 | ----- | .489 | .447 | 0.407 | ----- | 0.335 | .305 | .296 | ----- | .446 | 0.384 | ----- | 0.288 | .258 | ----- | .51 | .440 | 0.363 | ----- | 0.256 | .227 | .19 |
| -.5 | .511 | .541 | ----- | ----- | 0.464 | ----- | ----- | .422 | .562 | .521 | .477 | 0.429 | .400 | .367 | .355 | .582 | ----- | ----- | 0.390 | ----- | ----- | .284 | .592 | .51 | .42 | 0.361 | .31 | .28 | .238 |
| -.4 | .599 | ----- | .599 | ----- | ----- | ----- | .497 | ----- | .642 | .596 | .548 | .500 | .467 | .432 | .426 | ----- | .588 | ----- | ----- | ----- | .367 | ----- | .66 | .578 | .49 | .42 | .36 | .324 | .29 |
| -.3 | .693 | ----- | ----- | .653 | ----- | .602 | ----- | ----- | .723 | .677 | .622 | .576 | .538 | .508 | .500 | ----- | ----- | .585 | ----- | .469 | ----- | ----- | .74 | .64 | .537 | .48 | .422 | .38 | .34 |
| -.2 | .792 | ----- | .772 | ----- | .709 | ----- | .666 | ----- | .806 | .756 | .703 | .653 | .619 | .583 | .578 | ----- | .740 | ----- | .592 | ----- | .497 | ----- | .82 | .723 | .63 | .550 | .48 | .440 | .41 |
| -.1 | .895 | ----- | ----- | .831 | ----- | .776 | ----- | ----- | .894 | .841 | .786 | .731 | .697 | .662 | .659 | ----- | ----- | .734 | ----- | .613 | ----- | ----- | .89 | .79 | .698 | .62 | .556 | .51 | .48 |
| 0 | 1.000 | .988 | .959 | .919 | .889 | .867 | .846 | .853 | .941 | .929 | .867 | .816 | .776 | .745 | .744 | .975 | .893 | .813 | .741 | .681 | .641 | .626 | .973 | .866 | .778 | .690 | .616 | .573 | .544 |
| .1 | 1.105 | ----- | ----- | 1.009 | ----- | .953 | ----- | ----- | 1.065 | 1.012 | .946 | .900 | .857 | .833 | .827 | ----- | ----- | .882 | ----- | .760 | ----- | ----- | 1.04 | .93 | .839 | .76 | .696 | .64 | .62 |
| .2 | 1.208 | ----- | 1.139 | ----- | 1.068 | ----- | 1.033 | ----- | 1.147 | 1.091 | 1.025 | .980 | .938 | .918 | .918 | ----- | 1.037 | ----- | .890 | ----- | .797 | ----- | 1.11 | .999 | .91 | .830 | .76 | .716 | .69 |
| .3 | 1.307 | ----- | ----- | 1.184 | ----- | 1.131 | ----- | ----- | 1.224 | 1.166 | 1.105 | 1.060 | 1.021 | 1.000 | 1.001 | ----- | ----- | 1.025 | ----- | .910 | ----- | ----- | 1.17 | 1.05 | .973 | .89 | .837 | .78 | .76 |
| .4 | 1.401 | ----- | 1.307 | ----- | ----- | ----- | 1.204 | ----- | 1.300 | 1.241 | 1.178 | 1.136 | 1.092 | 1.078 | 1.082 | ----- | 1.168 | ----- | ----- | ----- | .948 | ----- | 1.22 | 1.115 | 1.04 | .96 | .90 | .861 | .84 |
| .5 | 1.489 | 1.419 | ----- | ----- | 1.314 | ----- | ----- | 1.295 | 1.371 | 1.310 | 1.247 | 1.203 | 1.166 | 1.156 | 1.163 | 1.317 | ----- | ----- | 1.092 | ----- | ----- | 1.022 | 1.280 | 1.17 | 1.09 | 1.018 | .97 | .92 | .925 |
| .6 | 1.569 | ----- | 1.452 | 1.409 | ----- | 1.362 | 1.360 | ----- | 1.436 | 1.369 | 1.308 | ----- | 1.236 | 1.227 | 1.237 | ----- | 1.277 | 1.205 | ----- | 1.112 | 1.090 | ----- | 1.32 | 1.212 | 1.139 | ----- | 1.031 | .999 | 1.00 |
| .7 | 1.641 | 1.550 | ----- | ----- | ----- | ----- | ----- | 1.438 | 1.405 | 1.428 | ----- | ----- | ----- | 1.298 | 1.307 | 1.413 | ----- | ----- | ----- | ----- | ----- | 1.170 | 1.362 | 1.26 | ----- | ----- | ----- | 1.06 | 1.079 |
| .8 | 1.706 | ----- | ----- | ----- | ----- | ----- | ----- | ----- | 1.532 | 1.479 | ----- | ----- | ----- | 1.359 | 1.373 | ----- | ----- | ----- | ----- | ----- | ----- | ----- | 1.40 | 1.29 | ----- | ----- | ----- | 1.12 | 1.14 |
| .9 | 1.762 | 1.651 | 1.616 | ----- | ----- | ----- | 1.546 | 1.563 | 1.573 | 1.514 | ----- | ----- | ----- | 1.407 | 1.433 | 1.487 | 1.403 | ----- | ----- | ----- | 1.266 | 1.296 | 1.427 | 1.324 | ----- | ----- | ----- | 1.171 | 1.204 |
| $\eta = -0.7$ | | | | | | | | | | | | | | | | | | | | | | | | | | | | | |
| -0.9 | 0.213 | 0.241 | 0.225 | ----- | ----- | ----- | 0.162 | 0.172 | 0.258 | 0.230 | ----- | ----- | ----- | 0.133 | 0.130 | 0.268 | 0.230 | ----- | ----- | ----- | 0.105 | 0.088 | 0.264 | 0.225 | ----- | ----- | ----- | 0.089 | 0.065 |
| -.8 | .264 | ----- | ----- | ----- | ----- | ----- | ----- | ----- | .314 | .280 | ----- | ----- | ----- | .182 | .166 | ----- | ----- | ----- | ----- | ----- | ----- | ----- | .32 | .28 | ----- | ----- | ----- | .12 | .08 |
| -.7 | .332 | .360 | ----- | ----- | ----- | ----- | ----- | 0.267 | .377 | .342 | ----- | ----- | ----- | .237 | .211 | .552 | ----- | ----- | ----- | ----- | ----- | 1.54 | .393 | .33 | ----- | ----- | ----- | .15 | .120 |
| -.6 | .405 | ----- | .408 | 0.388 | ----- | 0.342 | .318 | ----- | .441 | .407 | 0.367 | ----- | 0.294 | .265 | .260 | ----- | .400 | 0.337 | ----- | 0.241 | .214 | ----- | .46 | .392 | 0.311 | ----- | 0.206 | .183 | .16 |
| -.5 | .487 | .506 | ----- | ----- | 0.426 | ----- | ----- | .394 | .520 | .479 | .427 | 0.383 | .357 | .324 | .320 | .533 | ----- | ----- | 0.335 | ----- | ----- | .243 | .541 | .48 | .36 | 0.302 | .25 | .22 | .195 |
| -.4 | .577 | ----- | .563 | ----- | ----- | ----- | .463 | ----- | .599 | .551 | .497 | .457 | .420 | .388 | .382 | ----- | .538 | ----- | ----- | ----- | .313 | ----- | .61 | .527 | .43 | .35 | .30 | .265 | .24 |
| -.3 | .675 | ----- | ----- | .613 | ----- | .565 | ----- | ----- | .681 | .628 | .571 | .526 | .488 | .461 | .459 | ----- | ----- | .527 | ----- | .405 | ----- | ----- | .68 | .59 | .497 | .41 | .350 | .31 | .29 |
| -.2 | .780 | ----- | .738 | ----- | .671 | ----- | .634 | ----- | .764 | .712 | .649 | .600 | .562 | .534 | .535 | ----- | .685 | ----- | .526 | ----- | .431 | ----- | .76 | .669 | .56 | .477 | .42 | .365 | .35 |
| -.1 | .889 | ----- | ----- | .794 | ----- | .740 | ----- | ----- | .854 | .751 | .735 | .680 | .641 | .613 | .615 | ----- | ----- | .675 | ----- | .539 | ----- | ----- | .83 | .73 | .636 | .54 | .472 | .42 | .41 |
| 0 | 1.000 | .966 | .924 | .881 | .851 | .831 | .817 | .819 | .944 | .878 | .811 | .760 | .722 | .694 | .691 | .984 | .834 | .745 | .671 | .611 | .568 | .56 | .912 | .808 | .705 | .614 | .538 | .486 | .472 |
| .1 | 1.111 | ----- | ----- | .973 | ----- | .918 | ----- | ----- | 1.022 | .958 | .892 | .841 | .799 | .779 | .780 | ----- | ----- | .817 | ----- | .682 | ----- | ----- | .98 | .86 | .771 | .68 | .607 | .55 | .55 |
| .2 | 1.220 | ----- | 1.107 | ----- | 1.032 | ----- | 1.001 | ----- | 1.100 | 1.038 | .968 | .921 | .881 | .860 | .869 | ----- | .971 | ----- | .816 | ----- | .717 | ----- | 1.04 | .929 | .83 | .750 | .68 | .625 | .62 |
| .3 | 1.325 | ----- | ----- | 1.148 | ----- | 1.098 | ----- | ----- | 1.176 | 1.114 | 1.046 | 1.001 | .962 | .940 | .955 | ----- | ----- | .951 | ----- | .830 | ----- | ----- | 1.09 | .98 | .893 | .81 | .746 | .68 | .69 |
| .4 | 1.423 | ----- | 1.276 | ----- | ----- | ----- | 1.175 | ----- | 1.247 | 1.183 | 1.115 | 1.079 | 1.035 | 1.020 | 1.039 | ----- | 1.090 | ----- | ----- | ----- | .866 | ----- | 1.14 | 1.029 | .94 | .88 | .80 | .767 | .76 |
| .5 | 1.513 | 1.392 | ----- | ----- | 1.289 | ----- | ----- | 1.274 | 1.316 | 1.251 | 1.180 | 1.151 | 1.110 | 1.091 | 1.116 | 1.238 | ----- | ----- | 1.014 | ----- | ----- | .952 | 1.188 | 1.07 | .99 | .925 | .87 | .83 | .843 |
| .6 | 1.595 | ----- | 1.419 | 1.370 | ----- | 1.321 | 1.327 | ----- | 1.378 | 1.306 | 1.239 | ----- | 1.166 | 1.165 | 1.186 | ----- | 1.190 | 1.115 | ----- | 1.022 | 1.005 | ----- | 1.22 | 1.112 | 1.038 | ----- | .933 | .902 | .91 |
| .7 | 1.668 | 1.520 | ----- | ----- | ----- | ----- | ----- | 1.417 | 1.424 | 1.339 | ----- | ----- | ----- | 1.228 | 1.258 | 1.328 | ----- | ----- | ----- | ----- | ----- | 1.097 | 1.264 | 1.15 | ----- | ----- | ----- | .96 | .991 |
| .8 | 1.736 | ----- | ----- | ----- | ----- | ----- | ----- | ----- | 1.471 | 1.403 | ----- | ----- | ----- | 1.288 | 1.320 | ----- | ----- | ----- | ----- | ----- | ----- | ----- | 1.29 | 1.18 | ----- | ----- | ----- | 1.02 | 1.05 |
| .9 | 1.787 | 1.616 | 1.575 | ----- | ----- | ----- | 1.510 | 1.534 | 1.506 | 1.439 | ----- | ----- | ----- | 1.342 | 1.377 | 1.394 | 1.299 | ----- | ----- | ----- | 1.176 | 1.221 | 1.319 | 1.205 | ----- | ----- | ----- | 1.069 | 1.119 |

[a]Values given to three significant figures are calculated values; the others are interpolated values.

NATIONAL ADVISORY COMMITTEE FOR AERONAUTICS

TABLE IV.- TUNNEL INDUCED VELOCITY PARAMETER $\frac{4\pi r_0 w}{\Gamma\sigma \cos\psi}$ - Concluded

| | $\frac{4\pi r_0 w}{\Gamma\sigma \cos\psi}$ | | | | | | | | | | | | | | | | | | | | | | | | | | | | | |
|---|---|---|---|---|---|---|---|---|---|---|---|---|---|---|---|---|---|---|---|---|---|---|---|---|---|---|---|---|---|---|
| | $\sigma = 0$ | $\sigma = 0.25$ | | | | | | | $\sigma = 0.45$ | | | | | | | $\sigma = 0.70$ | | | | | | | $\sigma = 0.90$ (a) | | | | | | |
| $\xi \backslash \psi$ | All | -45° | -30° | -15° | 0° | 15° | 30° | 45° | -45° | -30° | -15° | 0° | 15° | 30° | 45° | -45° | -30° | -15° | 0° | 15° | 30° | 45° | -45° | -30° | -15° | 0° | 15° | 30° | 45° |
| $\eta = -0.9$ | | | | | | | | | | | | | | | | | | | | | | | | | | | | | |
| -0.9 | 0.184 | ----- | ----- | ----- | ----- | ----- | ----- | ----- | ----- | ----- | ----- | ----- | ----- | ----- | ----- | ----- | ----- | ----- | ----- | ----- | ----- | ----- | ----- | ----- | ----- | ----- | ----- | ----- | ----- |
| -.8 | .237 | ----- | ----- | ----- | ----- | ----- | ----- | ----- | ----- | ----- | ----- | ----- | ----- | ----- | ----- | ----- | ----- | ----- | ----- | ----- | ----- | ----- | ----- | ----- | ----- | ----- | ----- | ----- | ----- |
| -.7 | .300 | ----- | ----- | 0.281 | ----- | 0.242 | ----- | ----- | ----- | ----- | 0.259 | ----- | 0.194 | ----- | ----- | ----- | ----- | 0.227 | ----- | 0.145 | ----- | ----- | ----- | 0.282 | 0.201 | ----- | 0.115 | 0.102 | ----- |
| -.6 | .373 | ----- | 0.367 | ----- | ----- | ----- | 0.277 | ----- | ----- | 0.362 | .312 | ----- | .240 | 0.217 | ----- | ----- | 0.355 | ----- | ----- | ----- | 0.162 | ----- | 0.429 | .349 | .25 | ----- | .15 | .131 | 0.102 |
| -.5 | .456 | ----- | ----- | ----- | 0.382 | ----- | ----- | ----- | ----- | .434 | .379 | 0.328 | .300 | .271 | ----- | ----- | ----- | ----- | 0.271 | ----- | ----- | ----- | .50 | .42 | .31 | 0.232 | .18 | .16 | .13 |
| -.4 | .549 | 0.549 | .518 | .485 | ----- | .446 | .426 | 0.441 | 0.555 | .503 | .444 | .396 | .362 | .333 | 0.336 | 0.571 | .495 | .403 | ----- | .275 | .244 | .233 | .592 | .496 | .376 | .28 | .221 | .192 | .176 |
| -.3 | .652 | ----- | ----- | ----- | ----- | ----- | ----- | ----- | .642 | .586 | .521 | .467 | .438 | .404 | .408 | ----- | ----- | ----- | ----- | ----- | ----- | ----- | .66 | .57 | .44 | .33 | .28 | .22 | .22 |
| -.2 | .763 | ----- | .697 | .655 | .630 | .618 | .607 | ----- | .733 | .667 | .597 | .546 | .507 | .480 | .482 | ----- | .651 | .548 | .461 | .393 | .352 | ----- | .73 | .654 | .522 | .406 | .321 | .277 | .27 |
| -.1 | .880 | ----- | ----- | ----- | ----- | ----- | ----- | ----- | .820 | .751 | .680 | .626 | .588 | .562 | .564 | ----- | ----- | ----- | ----- | ----- | ----- | ----- | .80 | .72 | .58 | .48 | .39 | .32 | .32 |
| 0 | 1.000 | .938 | .889 | .846 | .816 | .802 | .803 | .807 | .907 | .836 | .766 | .712 | .672 | .645 | .648 | .888 | .800 | .698 | .614 | .542 | .482 | .484 | .887 | .791 | .662 | .552 | .460 | .384 | .384 |
| .1 | 1.120 | ----- | ----- | ----- | ----- | ----- | ----- | ----- | .985 | .920 | .843 | .792 | .759 | .724 | .739 | ----- | ----- | ----- | ----- | ----- | ----- | ----- | .94 | .84 | .72 | .63 | .52 | .45 | .45 |
| .2 | 1.237 | ----- | 1.082 | 1.034 | 1.003 | .992 | .991 | ----- | 1.062 | 1.001 | .931 | .878 | .841 | .813 | .826 | ----- | .933 | .846 | .768 | .693 | .634 | ----- | 1.00 | .898 | .801 | .699 | .600 | .522 | .52 |
| .3 | 1.348 | ----- | ----- | ----- | ----- | ----- | ----- | ----- | 1.140 | 1.080 | 1.002 | .952 | .917 | .891 | .914 | ----- | ----- | ----- | ----- | ----- | ----- | ----- | 1.04 | .93 | .84 | .76 | .67 | .60 | .59 |
| .4 | 1.451 | 1.304 | 1.258 | 1.204 | ----- | 1.158 | 1.162 | 1.188 | 1.219 | 1.147 | 1.076 | 1.025 | .994 | .977 | 1.000 | 1.141 | 1.045 | .964 | ----- | .840 | .795 | .805 | 1.096 | .983 | .901 | .81 | .746 | .680 | .680 |
| .5 | 1.544 | ----- | ----- | ----- | 1.251 | ----- | ----- | ----- | ----- | 1.209 | 1.141 | 1.095 | 1.059 | 1.042 | ----- | ----- | ----- | ----- | .956 | ----- | ----- | ----- | 1.12 | 1.01 | .94 | .873 | .80 | .74 | .77 |
| .6 | 1.627 | ----- | 1.395 | ----- | ----- | ----- | 1.302 | ----- | ----- | 1.258 | 1.197 | ----- | 1.121 | 1.114 | ----- | ----- | 1.127 | ----- | ----- | ----- | .937 | ----- | 1.170 | 1.045 | .98 | ----- | .86 | .826 | .842 |
| .7 | 1.700 | ----- | ----- | 1.405 | ----- | 1.359 | ----- | ----- | ----- | ----- | 1.243 | ----- | 1.178 | ----- | ----- | ----- | ----- | 1.096 | ----- | 1.017 | ----- | ----- | ----- | 1.073 | 1.007 | ----- | .921 | .894 | ----- |
| .8 | 1.763 | ----- | ----- | ----- | ----- | ----- | ----- | ----- | ----- | ----- | ----- | ----- | ----- | ----- | ----- | ----- | ----- | ----- | ----- | ----- | ----- | ----- | ----- | ----- | ----- | ----- | ----- | ----- | ----- |
| .9 | 1.816 | ----- | ----- | ----- | ----- | ----- | ----- | ----- | ----- | ----- | ----- | ----- | ----- | ----- | ----- | ----- | ----- | ----- | ----- | ----- | ----- | ----- | ----- | ----- | ----- | ----- | ----- | ----- | ----- |

[a] Values given to three significant figures are calculated values; the others are interpolated values.

NATIONAL ADVISORY
COMMITTEE FOR AERONAUTICS

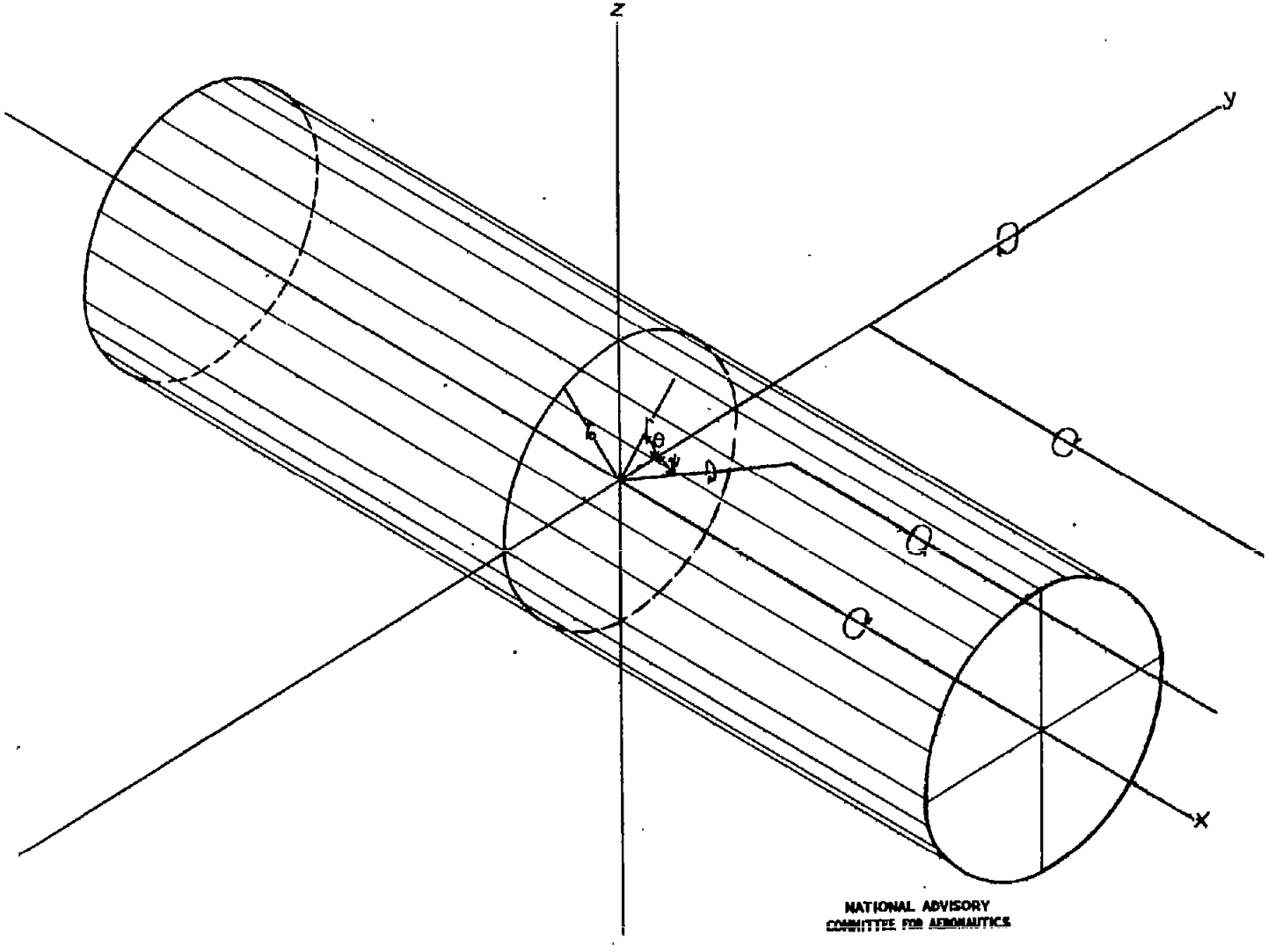


Figure 1.- Coordinate systems, showing tunnel, horseshoe vortex, and reflection vortex.

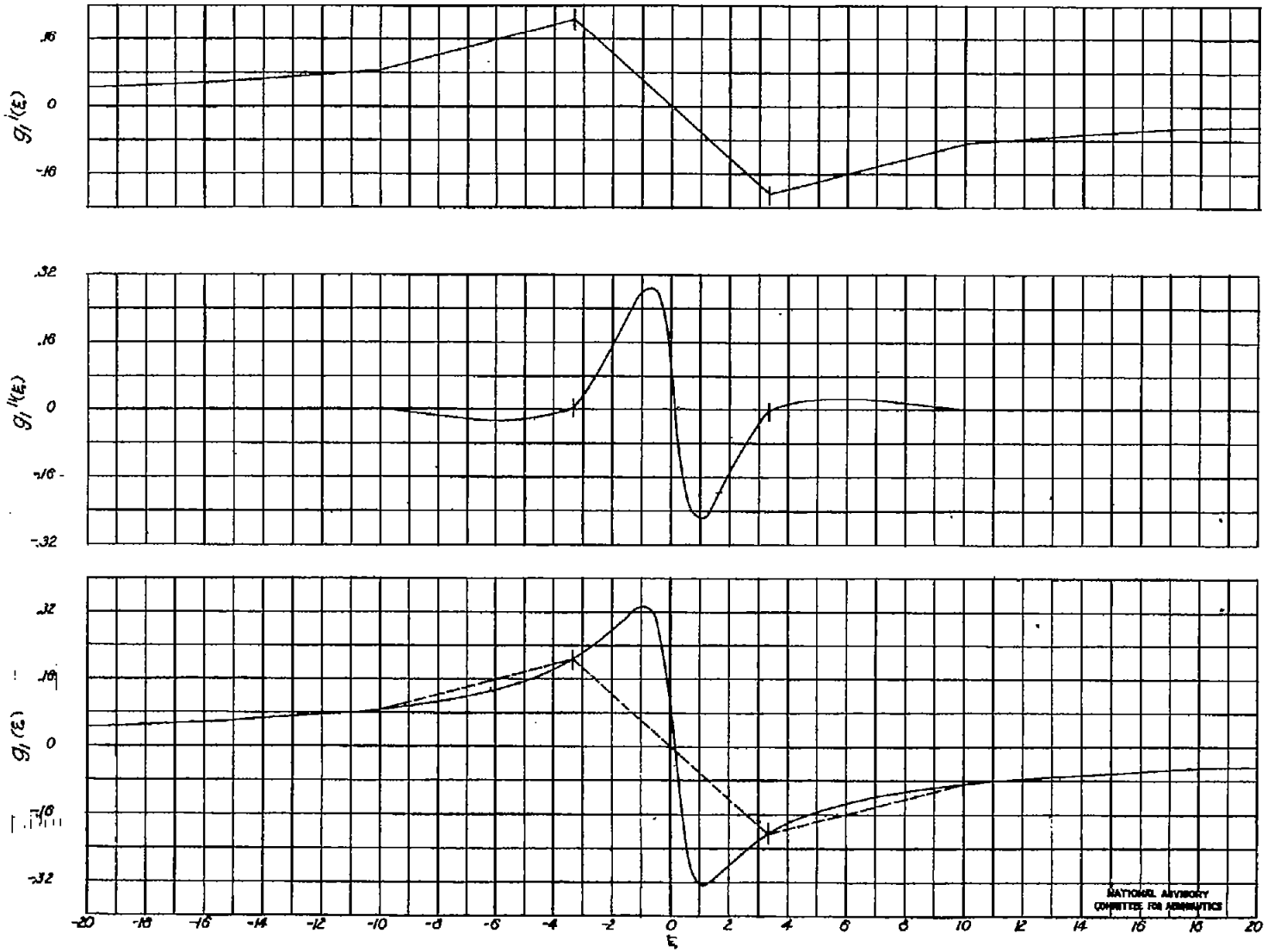


Figure 2.- Variation with $\xi$ of the Fourier coefficient $g_1$ for $\sigma = 0.45$, $\psi = 30^{\circ}$ and of its two components $g_1^{i}$ and $g_1^{ii}$.

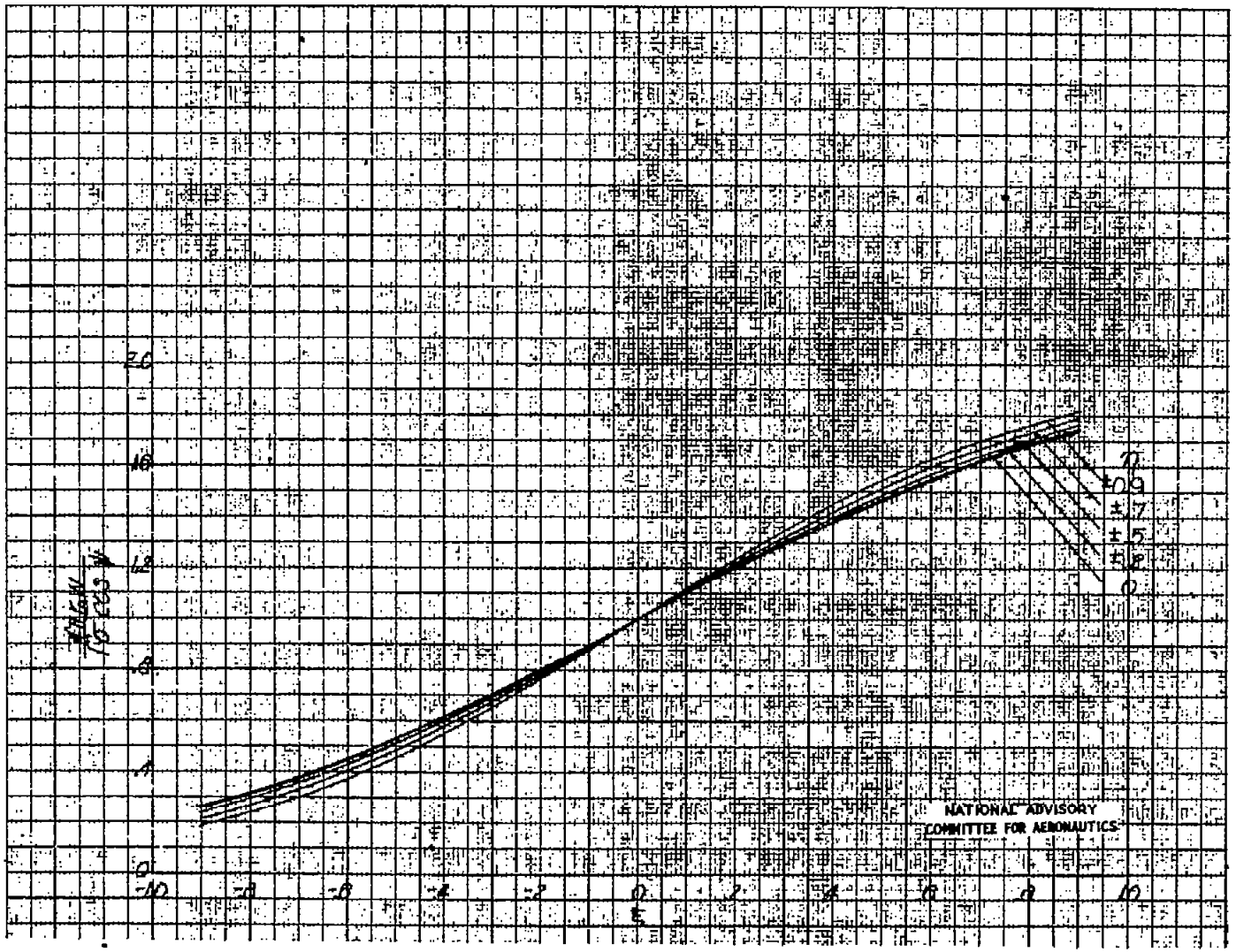


Figure 3.- Tunnel-induced-velocity parameter normal to the plane $\zeta = 0$, plotted against $\xi$ for different values of $\eta$. $\sigma = 0$; all values of $\psi$.

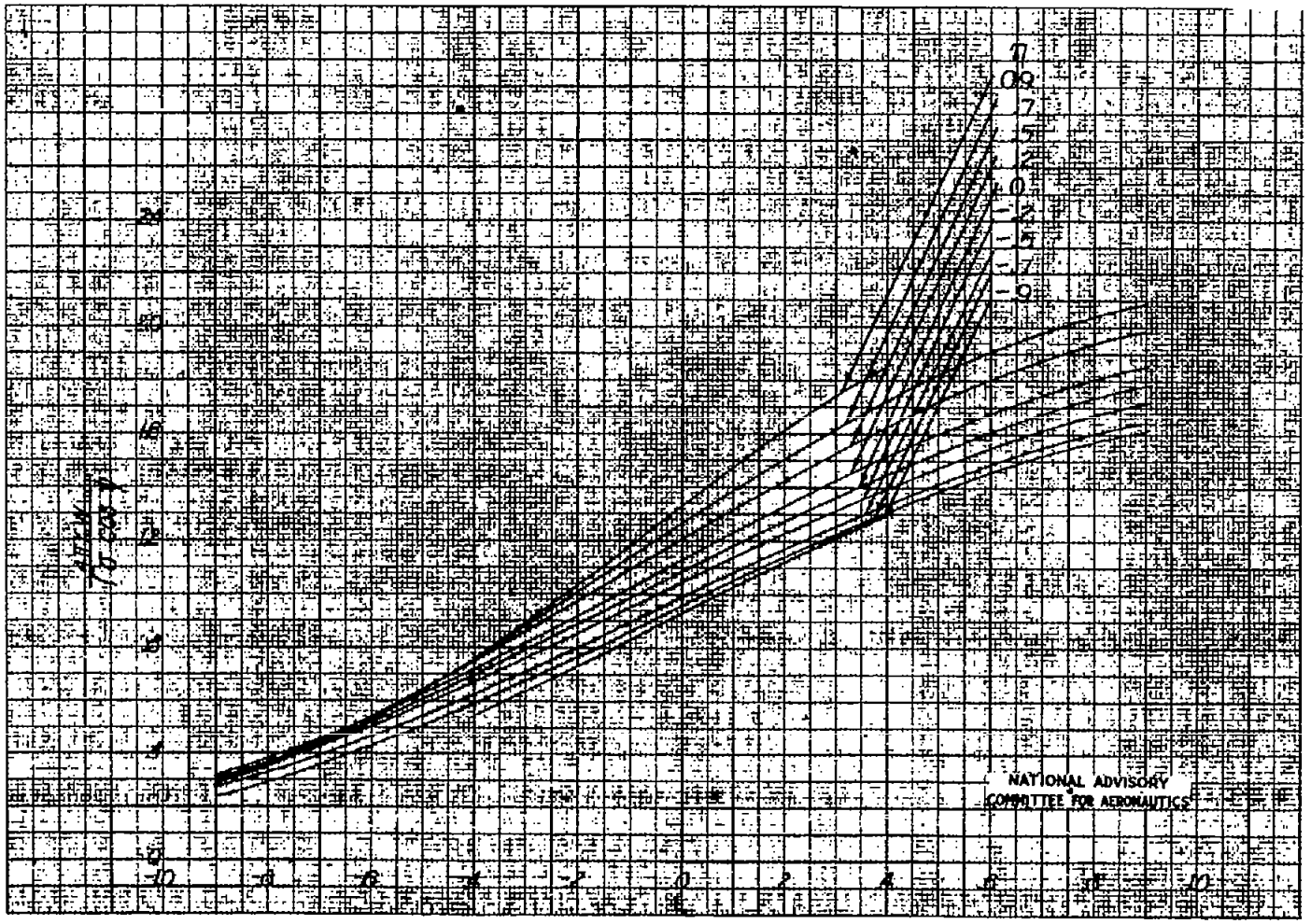


(a) $\psi = -45°$.

Figure 4.- Tunnel-induced-velocity parameter normal to the plane $\zeta = 0$ plotted against $\xi$ for different values of $\eta$. $\sigma = 0.25$.

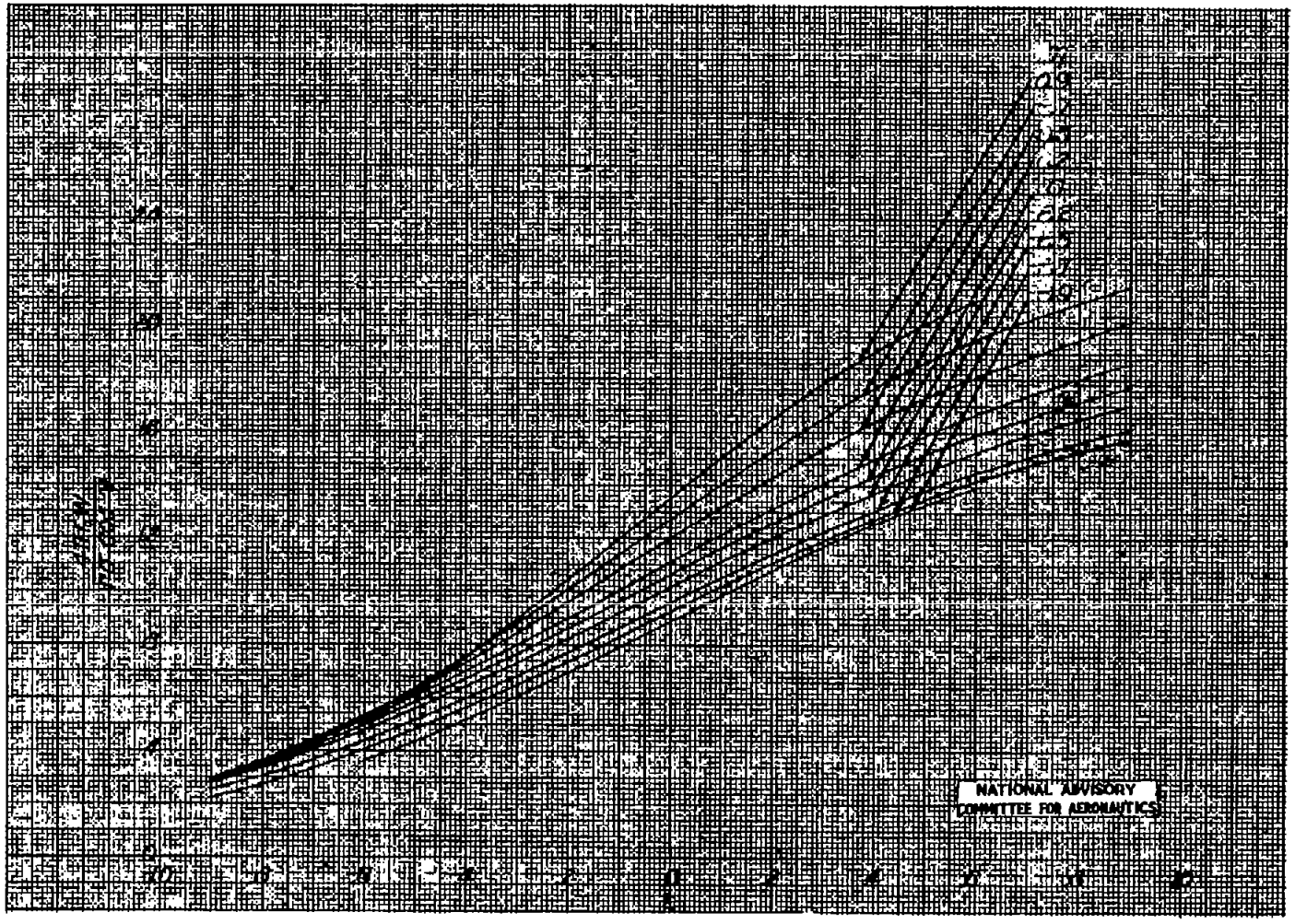


(b) $\psi = -30^{\circ}$.

Figure 4.- Continued.