NATIONAL ADVISORY COMMITTEE
FOR AERONAUTICS
MAILED
APR 25 1931
TO Library L. M. A. L.

APR 28 1931

TECHNICAL NOTES

NATIONAL ADVISORY COMMITTEE FOR AERONAUTICS

No. 373

INVESTIGATION OF THE DISCHARGE RATE OF A FUEL-INJECTION SYSTEM

By Harold C. Gerrish and Fred Voss
Langley Memorial Aeronautical Laboratory

FILE COPY
To be returned to
the files of the Langley
Memorial Aeronautical
Laboratory.

Washington
April, 1931

NASA Technical Library
3 1176 01431 9579

NATIONAL ADVISORY COMMITTEE FOR AERONAUTICS

TECHNICAL NOTE NO. 373

INVESTIGATION OF THE DISCHARGE RATE OF A FUEL-INJECTION SYSTEM

By Harold C. Gerrish and Fred Voss

Summary

In connection with the development of a method for analyzing indicator cards taken from high-speed compression-ignition engines, this investigation was undertaken to determine the average quantity of fuel discharged during each crank degree of the injection period. The fuel discharged by a cam-operated pump and automatic injection valve was collected in a rotating receiver. The weight of fuel discharged per unit time was determined for various crank-angle positions over the entire injection period.

The results show that 98 per cent of the fuel was discharged during an interval of 25 degrees, whereas the duration of the period from the start to the stop of the fuel spray was 68 degrees. The duration of the period as obtained in these tests checks with the results obtained with the oscilloscope. During the 29 crank degrees after the start of injection and the 14 degrees before the stop of injection only 2 per cent of the total weight of fuel is discharged.

The rate of fuel injection continued to increase for 7 degrees after the pump by-pass valve opened. Calculations show that this interval is required for the pressure wave in the fuel to travel from the by-pass valve to the injection nozzle.

Introduction

The interpretation of indicator cards taken from compression-ignition engines is difficult because of the variation in the weight and heat contents of the mixture during the engine cycle due to the injection of the fuel. The interpretation requires, among other things, a knowledge not only of the time of start and cut-off of the fuel spray, but also of the rate of fuel injection.

De Juhasz (Reference 1) developed an apparatus for determining the rate of fuel discharge using a constant-pressure injection system. He utilized a stationary receiver located opposite a cam-actuated injection valve. Between the receiver and the valve was a rotating disk with a slot. By means of this apparatus De Juhasz obtained some valuable results on the angular rate of fuel discharge. He found that by increasing the oil pressure the period of injection was increased and that the maximum rate occurs earlier in the period; and that the rate of discharge was more uniform at higher camshaft speed and with smaller orifices.

The purpose of this investigation was to determine the rate of fuel discharge from a cam-operated pump and automatic injection valve for a constant setting of the fuel pump controls and a speed of 750 revolutions per minute. The investigation was conducted at the Langley Memorial Aeronautical Laboratory of the National Advisory Committee for Aeronautics at Langley Field, Va.

Method and Apparatus

The method adopted by the authors of determining the rate of fuel discharge differed from that of De Juhasz in that a rotating receiver was employed. This method eliminated the rotating disk and permitted a reduction in the distance between the nozzle and the receiver. The method was especially suitable for fuel valve nozzles producing wide angle or multiple sprays.

The apparatus used for determining the rate of fuel discharge is shown in Figure 1. It consisted of a fuel-injection system, a rotating receiver assembly, and a revolution counter.

The injection system consisted of a cam-actuated fuel-injection pump, supply and discharge lines, supply tank, fuel cooler, injection valve, primary fuel pump, and pressure gauges. The injection pump was clamped to a block which was concentric with the flywheel shaft on which was fixed the variable acceleration cam that actuated the pump. Levers which control the time of closing and opening of the pump by-pass valve are shown at the top of the pump.

A detail drawing of the injection pump is shown in Figure 2. It differs from the pump as actually used only in having micrometer screws for controlling the position of the start and stop cams instead of levers. The start and stop cam blocks control the closing and opening of the by-pass valve, thus changing the time and period of injection. The shifting of the position of the control blocks, combined with the variable velocity cam, varies the quantity and rate of fuel discharge. Figure 3 shows the plunger displacement plotted against crank angle. The time of closing and opening of the pump by-pass valve as used during this investigation is also indicated.

The injection valve used was an automatic, spring-loaded valve (Fig. 4a). The nozzle used had seven orifices in one plane and is shown in detail in Figure 4b. The injection tube was of steel, 1/8 inch inside diameter and 36 inches long. During this investigation the valve opening pressure was 3,000 pounds per square inch; the maximum injection pressure during injection, 5,700 pounds per square inch; and the primary pump fuel pressure, 150 pounds per square inch.

The fuel used was a grade of Diesel engine oil having a specific gravity of 0.847 and a Saybolt Universal viscosity of 41 seconds at 80° F. Its temperature was kept at 80° F. by a water cooler.

The rotating receiver assembly consisted of a flywheel and a spray receiver. An electric motor was used to drive the fly-

wheel at 750 revolutions per minute by means of a leather belt. The flywheel and the receiver were surrounded by a loosely fitted sheet-metal casing. The casing was connected to an exhauster that removed the oil vapors and also the oil thrown off by the flywheel. In Figure 1 the casing cover is raised to show the location of the receiver.

The duralumin receiver used is shown in Figure 5. The steel tip was designed to prevent the creeping or spattering of oil into the orifice as the receiver passed through the fuel spray. The center line of the receiver was 7.00 inches from the axis of rotation and the width of the orifice was equal to the length of a 1-degree arc at this radius. The length of the orifice (0.416 inch) was slightly greater than the width of the spray when the distance between the receiver orifice and the injection nozzle was 1/16 inch. During this investigation the clearance between the receiver and the injection nozzle was 0.054 inch.

The test procedure was as follows: when the empty receiver was rotating at the desired speed and the primary oil pressure at the desired value, the spray was started by moving the control levers to the proper position. Simultaneously with the moving of these levers, the stop watch and revolution counter were started. After a given number of injections, depending upon the part of the discharge period being investigated, the control levers were moved to the stop position and the timing mechanism stopped. The

increase in the weight of the receiver was considered as the weight of fuel discharged. By changing the angular position of the pump, other parts of the discharge period were similarly investigated.

The average quantity of fuel discharged per injection was determined by collecting in a bottle the fuel discharged from the injection valve for a known number of injections. Absorbent cotton was placed between the injection valve and the bottle neck to collect any vapors or spattered oil.

An oscilloscope (Reference 2) was used to determine the injection lag which is the time, or equivalent in crank degrees, between the closing of the pump by-pass valve and the start of the spray at the injection nozzle.

Test Results and Discussion

Table I, column 2, gives the average rates of fuel discharge for several observations for each point. This is the weight of fuel discharged by the injection system per degree of crank angle for various intervals during the injection period. The rate curve (Fig. 6) was plotted from these data. The deviations from the average observations given in column 2 were less than ±2 per cent for all test points except four. Three of these were either at the start or stop of the injection period where the fuel collected was very small, even in 1,000 injections. The fourth point was near the peak of the

curve and the deviation was ±4.5 per cent from the average. After the rate of injection curve was approximately established, intermediate points were taken and a smooth curve could be drawn through all the points obtained, indicating good reproducibility of the data.

The total weight of fuel discharged up to various points of the injection period is given in Table I, column 3, and is plotted as the weight curve in Figure 6. This curve was derived from the rate curve by mechanical integration.

The average quantity of fuel discharged according to the bottle tests was 0.000364 pound per injection, but that determined by integrating the rate curve was 0.000399 pound per injection, an increase of 9.6 per cent over that collected in the bottle. This error may be caused by oil vapor being drawn into the receiver by jet action, by the determination of the rate of discharge for too large an interval during the injection period, or by a combination of both.

Because of the high velocity of the fuel jet and the viscosity of the air surrounding the jet, an excess quantity of fuel may have been drawn into the receiver from the spray within the casing.

The interval of injection measured, as determined by the width of the orifice, affects the results because, as the interval increases, the fuel collected divided by the interval would give an average value per crank degree that, when plotted, might

give a larger or smaller value than the instantaneous value. The value might be equal to the instantaneous value, depending upon the shape of the rate curve. It is advisable to make the width of the receiver orifice such that the quantities collected will more nearly approach instantaneous values instead of mean values.

Figure 3 shows that the by-pass valve closed at 68 crank degrees before top center, while Figure 6 shows that the receiver was able to collect fuel at 34 crank degrees before top center and not earlier, although the quantity was very small and does not show in the figure. The injection lag is therefore 34 degrees, and checks exactly the lag as found by means of the oscilloscope.

It will be noted in Figure 6 that the injection period is 68 crank degrees. However, from a practical viewpoint, the useful injection period could not be considered to be more than 25 crank degrees, because the results show that during the 29 crank degrees after the start of injection and the 14 degrees before the stop of injection only 2 per cent of the total weight of fuel is discharged.

The peak of the rate curve in Figure 6 occurs at 10 degrees after top center, and according to Figure 3 the by-pass valve opens at 3 degrees after top center. The advance of the peak is due to the time required for the pressure wave to travel from the by-pass valve to the injection valve nozzle. This is in

agreement with the results shown by Rothrock (Reference 3). Calculations show that if the bulk modulus of elasticity E of the fuel oil is taken as 284,000 pounds per square inch (Reference 4), then in the equation

$$V = \sqrt{\frac{Eg}{\rho}}$$

where V is the velocity of the pressure wave in the fuel, ρ the density, and g the gravitational constant, the value of V is 59,900 inches per second. Since the length of the oil path from the pump by-pass valve to the injection nozzle is 39 inches, the advance of the peak of the rate curve should be 39/59,900 seconds or approximately 6 crank degrees; whereas, it was 7 crank degrees.

Conclusions

These tests with the rotating receiver showed that 98 per cent of the fuel was discharged during an interval of 25 degrees, whereas, the duration of the period from the start to the stop of the fuel spray was 68 degrees. The duration of the period as obtained in these tests checks with the results obtained with the oscilloscope. The results show that during the 29 crank degrees after the start of injection and the 14 degrees before the stop of injection only 2 per cent of the total weight of fuel is discharged.

The rate of fuel injection continued to increase for 7 degrees after the pump by-pass valve opened. Calculations show that this interval is required for the pressure wave in the fuel to travel from the pump by-pass valve to the injection nozzle.

Langley Memorial Aeronautical Laboratory,
National Advisory Committee for Aeronautics,
Langley Field, Va., April 6, 1931.

References

1. De Juhasz, K. J. : The Pennsylvania State College Bulletin, Vol. 22, No. 35, November, 1929.

2. Hicks, Chester W. and Moore, Charles S. : The Determination of Several Spray Characteristics of a High-Speed Oil Engine Injection System with an Oscilloscope. N.A.C.A. Technical Note No. 298, 1928.

3. Rothrock, A. M. : Injection Lags in a Common-Rail Injection System. N.A.C.A. Technical Note No. 332, 1930.

4. Hersey, Mayo D. : Viscosity of Diesel Engine Fuel Oil under Pressure. N.A.C.A. Technical Note No. 315, 1929.

TABLE I

Total Weight and Rates of Fuel Injection

Crank Angle, degrees	Rate of Fuel Discharged, lb./deg.	Total Weight of Fuel Discharged*, lb.
B.T.C.		
34	0.00×10^{-6}	0.0×10^{-6}
26	0.01	---
18	0.04	---
14	0.11	0.4
12	0.25	---
10	0.31	1.6
8	0.81	---
6	2.12	6.0
4	---	13.6
2	10.55	28.8
T.C.	14.99	54.4
2	---	88.0
4	20.84	127.6
6	---	171.2
8	24.47	218.4
10	25.25	268.0
11	25.13	---
12	23.48	317.6
13	19.73	---
14	15.99	357.6
15	11.30	---
16	5.08	378.0
17	3.14	---
18	1.84	390.0
20	1.02	---
22	---	394.4
24	0.70	---
26	0.63	397.2
30	0.16	398.8
34	0.06	399.4
A.T.C.		

* Obtained by mechanical integration.

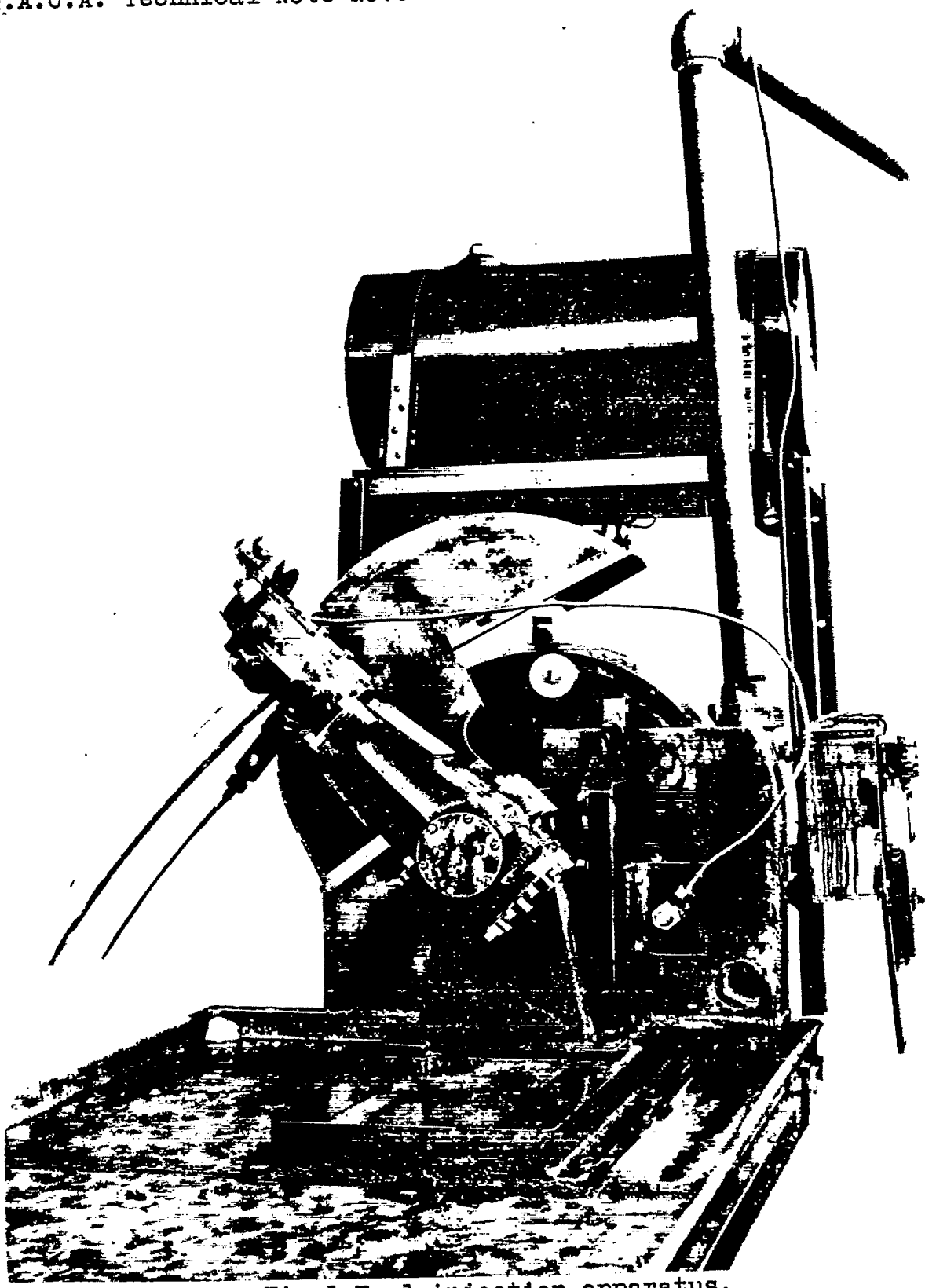

Fig.1 Fuel-injection apparatus.

Fig.4a

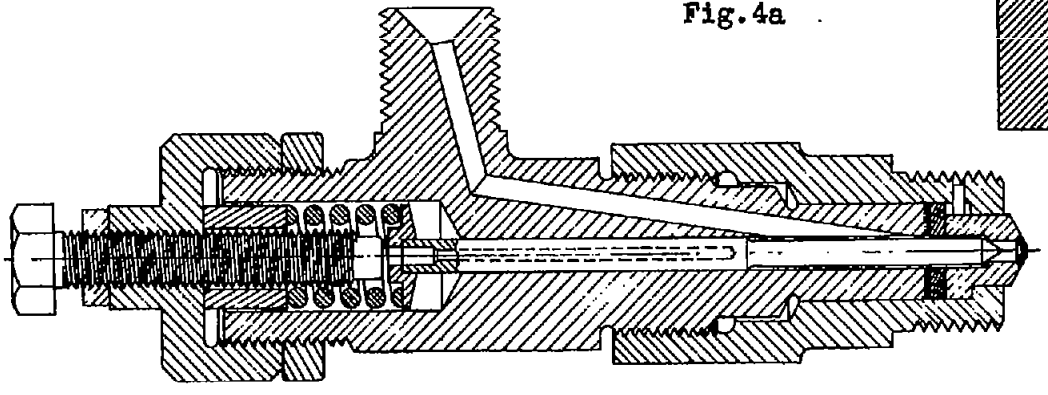

Fig.4b

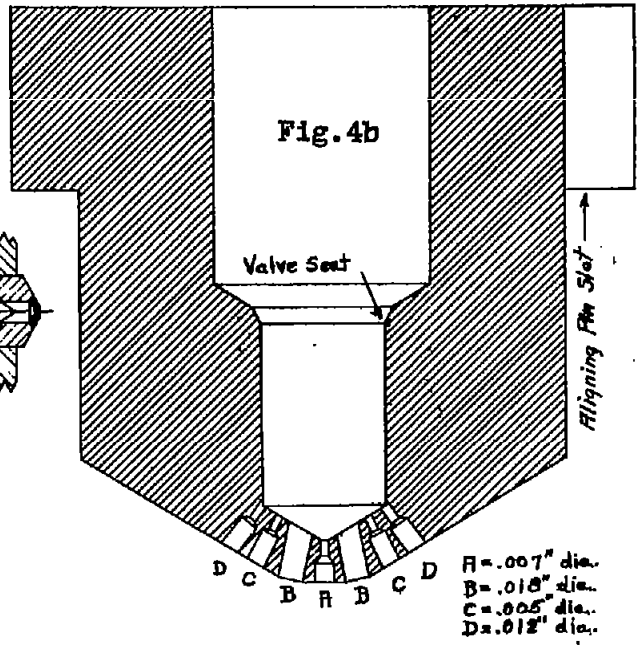

Figs.4a,4b Injection valve and nozzle.

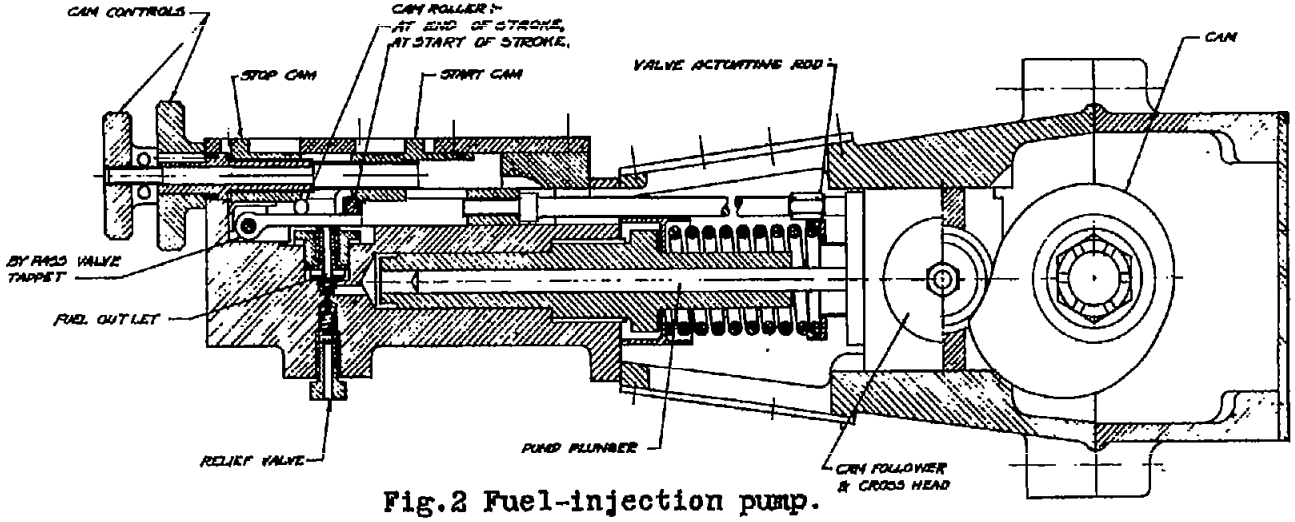

Fig.2 Fuel-injection pump.

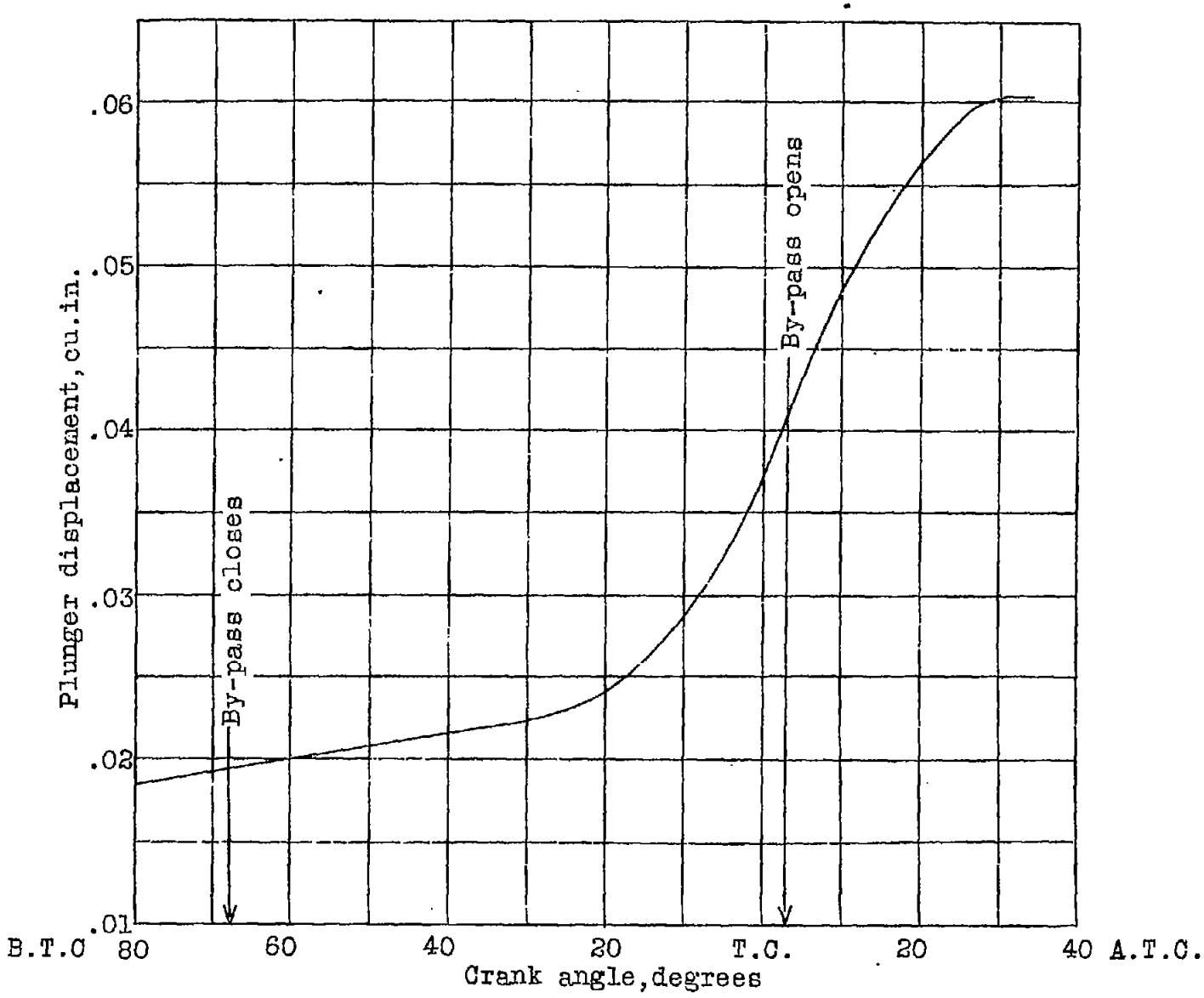

Fig.3 Pump plunger displacement.

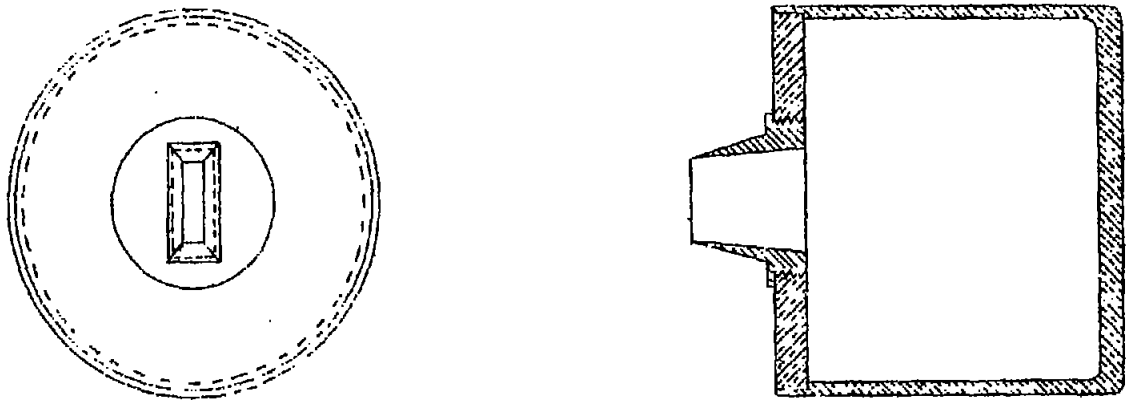

Fig.5 Sectional view of receiver.

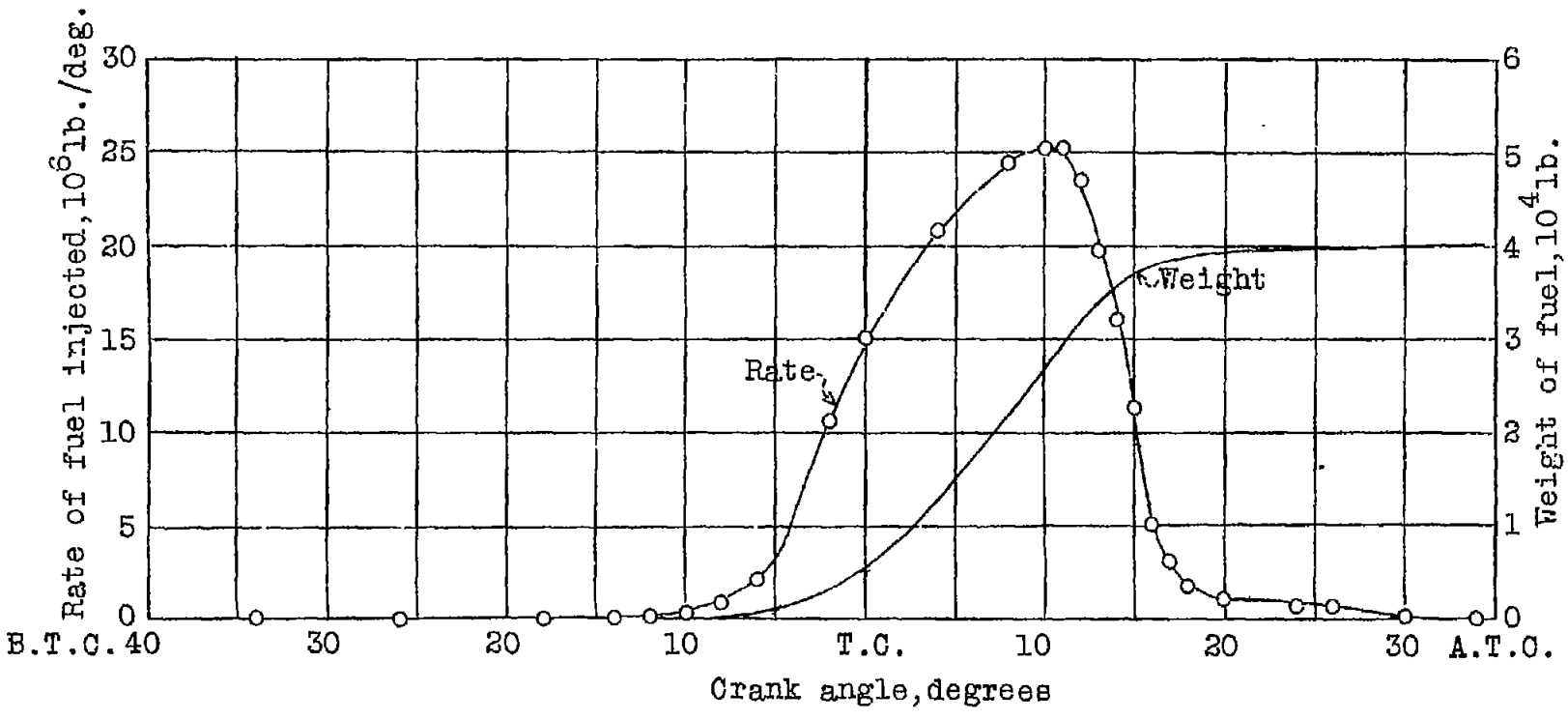

Fig.6 Total weight and rate of fuel injection.