NACA TN 2876 9207

TECH LIBRARY KAFB, NM
0065896

NATIONAL ADVISORY COMMITTEE FOR AERONAUTICS

TECHNICAL NOTE 2876

THE PLANING CHARACTERISTICS OF TWO V-SHAPED PRISMATIC SURFACES HAVING ANGLES OF DEAD RISE OF 20° AND 40°

By Derrill B. Chambliss and George M. Boyd, Jr.

Langley Aeronautical Laboratory
Langley Field, Va.

Washington
January 1953

AFM C
TECHNICAL LIBRARY
AFL 2811

TECH LIBRARY KAFB, NM
0065896

NATIONAL ADVISORY COMMITTEE FOR AERONAUTICS

TECHNICAL NOTE 2876

THE PLANING CHARACTERISTICS OF TWO V-SHAPED PRISMATIC SURFACES HAVING ANGLES OF DEAD RISE OF 20° AND 40°

By Derrill B. Chambliss and George M. Boyd, Jr.

SUMMARY

The principal planing characteristics have been obtained for two V-shaped prismatic surfaces having angles of dead rise of 20° and 40°. The load, wetted lengths, resistance, center-of-pressure location, and limited draft data are presented for speed coefficients up to 25.0, beam-loading coefficients from 0.85 to 87.33, keel-wetted-length—beam ratios up to approximately 8.0, and trims up to 30°. The data indicate that, for a given condition of load, speed, and trim, the wetted length, the distance of the center of pressure from the trailing edge, and the drag increase with an increase in the angle of dead rise.

INTRODUCTION

A general program of research on the planing characteristics of a series of related prismatic surfaces has been undertaken by the National Advisory Committee for Aeronautics and is described in reference 1. The primary objective of this program is an extension of the range of experimental data on planing surfaces to cover the high trims and wetted lengths of interest in the design of high-speed water-based airplanes.

This paper presents the hydrodynamic force data for two V-shaped planing surfaces having angles of dead rise of 20° and 40°. Load, wetted lengths, resistance, center-of-pressure location, and limited draft data are given for speed coefficients up to 25.0, trims up to 30°, and wetted-length—beam ratios up to 8.0. Similar data for surfaces having angles of dead rise of 20° and 40° and horizontal chine flare are presented in references 1 and 2.

SYMBOLS

b	beam of planing surface, ft
d	draft at trailing edge (measured vertically from undisturbed water level), ft
g	acceleration due to gravity, 32.2 ft/sec^2
l_c	chine wetted length, ft
l_k	keel wetted length, ft
l_m	mean wetted length, $\frac{l_c + l_k}{2}$ for these models, ft
l_p	center-of-pressure location (measured along keel forward of trailing edge of planing surface), $\frac{M}{\Delta \cos \tau + R \sin \tau}$, ft
M	trimming moment about trailing edge of planing surface at keel, ft-lb
Δ	vertical load, lb
F	friction, parallel to planing surface, lb
R	horizontal resistance, lb
R_e	Reynolds number, $V_m l_m/\nu$
S	principal wetted area (bounded by trailing edge, chines, and heavy spray line) projected on plane parallel to keel, $l_m b$, sq ft
S_f	actual wetted area aft of stagnation line, sq ft
V	horizontal velocity, ft/sec
V_m	mean velocity over planing surface, $\sqrt{V^2\left(1 - \frac{C_{L_b}}{\cos \tau \frac{l_m}{b}}\right)}$
w	specific weight of water, lb/ft^3
C_Δ	load coefficient, Δ/wb^3

C_R resistance coefficient, R/wb^3

C_V speed coefficient or Froude number, $V/\sqrt{gb}$

C_f skin-friction coefficient,

$$\frac{F}{\frac{\rho}{2} S_f V_m^2} = \frac{\cos\beta \cos^2\tau}{\frac{l_m}{b}\cos\tau - C_{L_b}}\left(C_{D_b} - C_{L_b}\tan\tau\right)$$

C_{L_b} lift coefficient based on beam, $\frac{\Delta}{\frac{\rho}{2} V^2 b^2} = 2\frac{C_\Delta}{C_V^2}$

C_{D_b} drag coefficient based on beam, $\frac{R}{\frac{\rho}{2} V^2 b^2} = 2\frac{C_R}{C_V^2}$

C_{L_S} lift coefficient based on principal wetted area, $\frac{\Delta}{\frac{\rho}{2} V^2 S} = \frac{C_{L_b}}{l_m/b}$

C_{D_S} drag coefficient based on principal wetted area, $\frac{R}{\frac{\rho}{2} V^2 S} = \frac{C_{D_b}}{l_m/b}$

β angle of dead rise, deg

ρ mass density of water, slugs/ft^3

τ trim (angle between keel and horizontal), deg

ν kinematic viscosity, ft^2/sec

DESCRIPTION OF THE MODELS

The models are simple V-shaped prismatic surfaces having angles of dead rise of 20° and 40°, as shown in figures 1 and 2, respectively. Each model is constructed of brass, has a rectangular plan form and a beam of 4 inches, and is 36 inches long. A detailed description of the construction and finish of the models is presented in reference 1.

APPARATUS AND PROCEDURES

A description of the Langley tank no. 1, the apparatus for towing the model, and the instrumentation for measuring the lift, drag, and

trimming moment are given in reference 3, and the general procedure for making the tests is given in reference 1. A diagram of the model and towing gear is presented in figure 3.

The wetted lengths were usually obtained from underwater photographs, and when photographs were not available, visual readings were used. A typical underwater photograph of the V-shaped surface is shown in figure 4. The mean wetted length was taken as the average of the keel and chine wetted lengths. Actually, as can be seen in figure 4, the visible stagnation line appears to be slightly curved so that the actual mean wetted length is slightly greater than the average of the keel and chine wetted lengths. The difference, however, was generally within the precision of measurement and therefore was neglected in the calculation of the mean wetted length and the principal wetted area.

A similar underwater photograph of a surface having an 8-inch beam and a 20° angle of dead rise is shown in figure 5. The wool tufts attached to the bottom of the model show in more detail the change in flow at the visible stagnation line used to define the principal wetted area. Forward of the stagnation line, the flow is seen to be principally in a lateral direction and consists primarily of light spray which contributes little or no lift. Behind this line, the flow is toward the trailing edge with a small lateral component near the chines.

Only a limited number of draft data were obtained since the apparatus, described in reference 2, for measuring the water level was not available during most of the tests.

The aerodynamic tares were held to a minimum by the wind-shielding arrangement described in reference 1. The force data were corrected for any residual tares that were appreciable. The quantities measured are generally believed to be accurate within the following limits:

Load, lb	±0.15
Trim, deg	±0.10
Speed, ft/sec	±0.20
Resistance, lb	±0.15
Trimming moment, ft-lb	±0.50
Wetted length, in.	±0.25

RESULTS

The experimental data for the surface having an angle of dead rise of 20° are presented in table I and those for the surface having an angle of dead rise of 40°, in table II. The load, resistance, speed, wetted lengths, and center-of-pressure location are expressed as conventional

nondimensional hydrodynamic coefficients. By following the procedure used in references 1 and 2, the lift and drag coefficients are expressed both in terms of the square of the beam and in terms of the principal wetted area. The draft data are limited in scope and have therefore been omitted from the tables of data. Data for the dry-chine condition were also omitted inasmuch as the precision of the data for this condition became marginal because of the small wetted areas. The nonplaning conditions, those conditions strongly affected by buoyancy, for the surface having a 20° angle of dead rise were not included herein in light of the results of the supplementary low-speed schedule described in reference 1. For the surface having a 40° angle of dead rise, all conditions where buoyancy exceeded 20 percent of the total load (ref. 2) were considered nonplaning and were not included.

Plots of the data are presented in figures 6 to 19. In general, the trends with dead rise are the same as those noted in reference 2. With an increase in the angle of dead rise, the wetted length (or area) required at a given lift coefficient and trim was increased. (See figs. 6 and 7.) The difference between the keel and chine wetted lengths was constant for a given trim for both models (figs. 8 and 9). This difference (fig. 10) was greater for the model with the higher angle of dead rise and showed the same trends as those predicted by the two-dimensional wave-rise theory of Wagner as applied in reference 4. The experimental values are generally lower than those given by theory and the differences are generally greater for the surface having the higher angle of dead rise.

For a given value of C_{L_b}, an increase in angle of dead rise resulted in a forward shift of the center-of-pressure location (figs. 11 and 12). The average ratio of l_p/l_m for each trim is presented in figures 13 and 14. Increasing the angle of dead rise decreases this ratio as can be seen in figure 15 in which the variation of l_p/l_m with trim is shown for both surfaces.

Draft data for the two models are shown in figures 16 and 17 where the measured draft in beams is plotted against that computed from the keel wetted length. The computed draft is defined by $\frac{l_k}{b} \sin \tau$. These data show evidence of pile-up of water at the keel for both models at high trims. The amount of pile-up generally appears to be least for the surface having the higher angle of dead rise.

Figures 18 and 19 present the total drag and the induced drag computed from the lift where the induced drag coefficient is defined by $C_{L_b} \tan \tau$. The difference between the measured drag and the induced drag is the friction drag. Comparison of these figures indicates that the increase in angle of dead rise results in an increase in friction

drag for a given lift coefficient because of the greater wetted area. At the higher trims, the friction-drag component is small or negligible as compared with the induced-drag component.

The calculated skin-friction coefficients for trims where the friction is appreciable are plotted against Reynolds number in figures 20 and 21. In calculating the skin-friction coefficients from the test data, the values obtained from faired curves of total drag coefficient (figs. 18 and 19) and the values obtained from faired curves of mean-wetted-length—beam ratio (figs. 6 and 7) were used to improve the precision. The grouping of the data with respect to the Schoenherr and Blasius lines suggests that the boundary layer at the higher Reynolds numbers was fully turbulent and that the friction at larger scales may be calculated with reasonable accuracy from the Schoenherr line (ref. 5).

CONCLUDING REMARKS

The effects of an increase in angle of dead rise on the planing characteristics of a prismatic surface are, in general, those that would be expected from a consideration of the change in geometry caused by a change in the angle of dead rise. For a given condition of load, speed, and trim, an increase in angle of dead rise increased the wetted length and hydrodynamic resistance and moved the center-of-pressure location forward. These results are also consistent with those obtained in an investigation of the effects of increasing the angle of dead rise on the planing characteristics of prismatic surfaces having horizontally flared chines (NACA TN's 2804 and 2842).

Langley Aeronautical Laboratory,
National Advisory Committee for Aeronautics,
Langley Field, Va., October 22, 1952.

REFERENCES

1. Kapryan, Walter J., and Weinstein, Irving: The Planing Characteristics of a Surface Having a Basic Angle of Dead Rise of 20° and Horizontal Chine Flare. NACA TN 2804, 1952.

2. Blanchard, Ulysse J.: The Planing Characteristics of a Surface Having a Basic Angle of Dead Rise of 40° and Horizontal Chine Flare. NACA TN 2842, 1952.

3. Truscott, Starr: The Enlarged N.A.C.A. Tank, and Some of Its Work. NACA TM 918, 1939.

4. Korvin-Kroukovsky, B. V., Savitsky, Daniel, and Lehman, William F.: Wetted Area and Center of Pressure of Planing Surfaces. Preprint No. 244, S.M.F. Fund Paper, Inst. Aero. Sci. (Rep. No. 360, Project No. NR062-012, Office Naval Res., Exp. Towing Tank, Stevens Inst. Tech., Aug. 1949.)

5. Davidson, Kenneth S. M.: Resistance and Powering. Detailed Considerations - Skin Friction. Vol. II of Principles of Naval Architecture, ch. II, pt. 2, sec. 7, Henry E. Rossell and Lawrence B. Chapman, eds., Soc. Naval Arch. and Marine Eng., 1939, pp. 76-83.

TABLE I

EXPERIMENTAL DATA OBTAINED FOR A PLANING SURFACE HAVING A 20° ANGLE OF DEAD RISE

LANGLEY TANK MODEL 276

[Average kinematic viscosity = 10.55×10^{-6} ft^2/sec; specific weight of tank water = 63.4 lb/cu ft]

Trim, τ, deg	C_Δ	C_V	C_R	$\frac{l_c}{b}$	$\frac{l_m}{b}$	$\frac{l_k}{b}$	$\frac{l_p}{b}$	C_{L_b}	C_{D_b}	C_{L_S}	C_{D_S}
2	0.85	9.27	0.37	0	1.47	2.92	2.49	0.0198	0.0073	0.013	0.0050
2	2.13	9.67	1.01	3.75	5.22	6.68	3.42	.0456	.0216	.009	.0041
2	2.13	9.70	.90	3.08	4.52	5.95	2.94	.0453	.0191	.010	.0042
2	2.13	14.64	.93	0	1.47	2.92	1.80	.0200	.0087	.014	.0059
2	4.26	13.48	5.56	5.50	6.97	8.42	4.86	.0468	.0262	.007	.0038
2	4.26	13.54	2.17	4.50	5.97	7.42	3.39	.0465	.0236	.008	.0040
2	4.26	19.89	2.06	.68	2.19	3.70	1.59	.0216	.0104	.010	.0047
2	4.26	20.65	1.98	.62	2.09	3.55	1.59	.0200	.0093	.010	.0044
2	4.26	23.12	2.04	0	1.47	2.92	1.50	.0158	.0076	.011	.0052
2	6.39	16.78	3.62	---	---	---	4.59	.0456	.0258	---	---
2	6.39	17.02	3.32	4.25	5.72	7.18	4.05	.0441	.0229	.008	.0040
2	6.39	17.02	3.39	5.00	6.50	8.00	3.90	.0441	.0233	.007	.0036
2	6.39	20.04	2.84	1.88	3.34	4.80	2.52	.0318	.0141	.010	.0042
2	6.39	20.04	3.04	1.95	3.47	5.00	2.43	.0318	.0151	.009	.0044
2	6.39	25.50	2.55	0	1.47	2.92	1.26	.0196	.0078	.013	.0053
4	.85	6.16	.12	.38	1.09	1.80	.63	.0448	.0063	.041	.0058
4	2.13	7.32	.49	2.80	3.52	4.22	2.43	.0795	.0184	.023	.0052
4	2.13	7.38	.46	2.22	2.96	3.70	1.67	.0782	.0169	.026	.0057
4	6.39	10.16	1.67	5.88	6.59	7.30	4.38	.1238	.0323	.019	.0049
4	6.39	10.28	1.69	5.88	6.59	7.30	4.59	.1209	.0320	.018	.0049
4	6.39	12.75	1.56	2.50	3.22	3.92	2.28	.0785	.0192	.024	.0060
4	6.39	12.81	1.64	2.75	3.46	4.18	2.52	.0779	.0200	.023	.0058
4	6.39	12.90	1.61	2.25	2.96	3.68	2.52	.0768	.0193	.026	.0065
4	6.39	16.84	1.27	.50	1.21	1.92	.99	.0450	.0090	.037	.0074
4	6.39	16.93	1.46	.62	1.34	2.05	1.05	.0446	.0102	.033	.0076
4	6.39	16.99	1.44	.50	1.21	1.92	1.11	.0444	.0101	.037	.0083
4	6.39	17.08	1.48	.38	1.09	1.80	1.11	.0439	.0103	.040	.0094
4	6.39	19.92	1.34	.25	1.00	1.75	.72	.0323	.0067	.032	.0067
4	6.39	20.07	1.45	0	.71	1.42	1.05	.0318	.0072	.045	.0101
4	10.65	13.12	2.89	6.50	7.22	7.92	5.07	.1237	.0336	.017	.0047
4	10.65	16.16	2.81	3.00	3.72	4.42	2.85	.0816	.0215	.022	.0058
4	10.65	16.35	2.74	3.00	3.69	4.38	2.76	.0797	.0205	.022	.0056
4	10.65	16.56	2.73	2.80	3.52	4.20	2.52	.0777	.0199	.022	.0057
4	10.65	18.36	2.46	1.62	2.36	3.10	1.83	.0634	.0146	.027	.0062
4	10.65	18.45	2.50	1.50	2.21	2.92	1.74	.0626	.0148	.028	.0067
4	10.65	18.51	2.50	1.71	2.41	3.12	1.74	.0622	.0146	.026	.0061
4	10.65	22.02	2.42	.50	1.21	1.92	1.14	.0438	.0100	.036	.0083
4	10.65	25.01	2.47	.12	.84	1.55	.84	.0340	.0079	.040	.0094
4	19.17	17.35	5.30	6.75	7.41	8.08	5.13	.1274	.0352	.017	.0048
4	19.17	17.54	5.30	6.62	7.34	8.05	5.28	.1246	.0343	.017	.0047
4	19.17	19.83	5.13	4.50	5.25	6.00	3.63	.0975	.0260	.019	.0050
4	19.17	21.96	4.94	3.00	3.72	4.42	2.70	.0795	.0204	.021	.0055
4	19.17	25.16	4.56	1.50	2.21	2.92	1.80	.0605	.0144	.027	.0065
4	27.69	21.05	6.98	6.12	6.84	7.55	4.65	.1250	.0315	.018	.0046
4	27.69	21.35	7.50	6.25	6.94	7.62	4.71	.1215	.0328	.018	.0047
4	27.69	22.88	7.71	5.25	5.94	6.62	4.05	.1058	.0293	.018	.0049
4	27.69	22.88	6.92	4.68	5.39	6.10	3.96	.1058	.0264	.020	.0049
4	27.69	23.12	7.34	5.25	5.96	6.68	4.38	.1036	.0274	.017	.0046
4	27.69	24.70	6.99	4.00	4.71	5.42	3.54	.0908	.0229	.019	.0049
4	27.69	25.01	6.58	3.50	4.21	4.92	3.15	.0885	.0210	.021	.0050
4	27.69	25.07	7.43	3.82	4.54	5.25	3.39	.0882	.0236	.019	.0052
4	36.21	24.03	9.21	6.00	6.71	7.42	4.74	.1254	.0319	.019	.0048
4	36.21	24.61	9.93	6.12	6.78	7.42	4.62	.1195	.0328	.018	.0048
4	36.21	24.86	9.02	5.50	6.22	6.92	4.38	.1172	.0292	.019	.0047
6	.85	4.58	.12	.38	.88	1.38	.87	.0810	.0114	.092	.0130
6	.85	4.67	.14	.50	1.00	1.50	.63	.0779	.0129	.078	.0129
6	.85	4.88	.17	.80	1.30	1.80	.75	.0715	.0143	.055	.0110
6	2.13	7.41	.46	.88	1.37	1.88	1.38	.0777	.0167	.057	.0122
6	6.39	9.70	1.30	2.25	2.75	3.25	1.83	.1358	.0276	.049	.0100
6	6.39	10.10	1.21	2.25	2.75	3.25	1.91	.1253	.0238	.046	.0087
6	6.39	10.16	1.21	2.28	2.81	3.35	1.78	.1238	.0234	.044	.0083
6	6.39	10.16	1.28	2.25	2.75	3.25	2.01	.1238	.0249	.045	.0091
6	6.39	10.34	1.34	2.25	2.75	3.25	2.04	.1195	.0250	.043	.0091
6	6.39	12.87	1.27	.75	1.25	1.75	1.14	.0772	.0153	.062	.0122
6	6.39	17.02	1.23	0	.50	1.00	.72	.0441	.0085	.088	.0170
6	10.65	10.71	2.16	5.00	5.50	6.00	3.53	.1857	.0377	.034	.0069
6	10.65	10.89	2.34	4.50	5.00	5.50	3.33	.1796	.0394	.036	.0079
6	10.65	11.01	2.27	4.62	5.13	5.62	3.27	.1757	.0373	.034	.0073
6	10.65	11.04	2.38	4.50	5.00	5.50	3.27	.1748	.0390	.035	.0078
6	10.65	13.05	2.05	2.40	2.97	3.55	2.04	.1250	.0241	.042	.0081
6	10.65	16.53	2.03	.75	1.25	1.75	1.08	.0780	.0148	.062	.0118

NACA

TABLE I - Continued

EXPERIMENTAL DATA OBTAINED FOR A PLANING SURFACE HAVING A 20° ANGLE OF DEAD RISE

LANGLEY TANK MODEL 276

Trim, τ, deg	C_Δ	C_V	C_R	$\frac{l_c}{b}$	$\frac{l_m}{b}$	$\frac{l_k}{b}$	$\frac{l_p}{b}$	C_{L_b}	C_{D_b}	C_{L_S}	C_{D_S}
6	10.65	21.93	2.11	0	0.50	1.00	0.60	0.0451	0.0088	0.090	0.0176
6	19.17	12.50	3.97	7.38	7.87	8.35	5.13	.2454	.0508	.031	.0065
6	19.17	12.60	3.91	6.88	7.38	7.88	4.41	.2415	.0491	.033	.0067
6	19.17	12.72	4.11	7.38	7.88	8.38	4.95	.2370	.0508	.030	.0064
6	19.17	12.81	4.19	7.28	7.74	8.20	4.85	.2336	.0510	.030	.0066
6	19.17	17.42	3.81	2.48	3.04	3.60	2.16	.1263	.0251	.042	.0083
6	19.17	17.54	3.58	2.38	2.88	3.38	2.10	.1246	.0232	.043	.0081
6	19.17	17.60	3.86	2.38	2.88	3.38	2.16	.1238	.0249	.043	.0086
6	19.17	22.05	3.25	.75	1.25	1.75	.90	.0780	.0134	.063	.0107
6	19.17	25.25	3.21	.25	.75	1.25	.78	.0600	.0101	.080	.0135
6	27.69	15.16	6.07	7.25	7.75	8.25	5.10	.2410	.0530	.031	.0068
6	27.69	17.51	5.99	4.90	5.40	5.90	3.75	.1806	.0391	.033	.0072
6	27.69	17.66	5.75	4.62	5.12	5.62	3.63	.1776	.0370	.035	.0072
6	27.69	21.29	5.33	2.38	2.88	3.38	2.13	.1222	.0236	.042	.0082
6	27.69	25.41	5.08	1.00	1.50	2.00	1.11	.0859	.0157	.057	.0105
6	36.21	17.48	7.90	7.12	7.62	8.12	5.01	.2370	.0516	.031	.0068
6	36.21	20.16	7.47	4.62	5.12	5.62	3.63	.1782	.0369	.035	.0072
6	36.21	24.13	7.47	2.62	3.12	3.62	2.22	.1244	.0251	.040	.0080
6	36.21	24.46	7.03	2.38	2.88	3.38	2.07	.1210	.0234	.042	.0081
6	36.21	24.55	7.51	2.40	2.90	3.40	2.13	.1202	.0249	.041	.0086
6	36.21	25.41	7.04	2.12	2.62	3.12	1.83	.1122	.0218	.043	.0083
6	53.25	21.08	11.61	7.00	7.50	8.00	---	.2397	.0523	.032	.0070
6	53.25	24.28	11.11	4.50	5.00	5.50	3.45	.1807	.0377	.036	.0075
6	53.25	25.01	11.01	4.00	4.50	5.00	3.24	.1703	.0352	.038	.0078
12	.85	4.58	.15	.12	.36	.60	.30	.0810	.0143	.225	.0397
12	2.13	4.82	.48	1.00	1.24	1.48	.78	.1834	.0413	.148	.0333
12	2.13	7.23	.50	.10	.39	.68	.51	.0816	.0190	.209	.0490
12	6.39	10.25	1.47	.38	.61	.85	.48	.1216	.0280	.199	.0459
12	6.39	12.50	1.51	.17	.44	.70	.33	.0818	.0193	.186	.0439
12	6.39	12.93	1.46	.10	.35	.60	.39	.0764	.0174	.218	.0497
12	10.65	9.39	2.61	1.70	1.90	2.10	1.32	.2416	.0592	.127	.0312
12	10.65	10.80	2.48	.95	1.19	1.42	.90	.1826	.0424	.153	.0356
12	10.65	16.23	2.58	.10	.36	.62	.40	.0810	.0195	.225	.0542
12	19.17	9.70	4.71	4.02	4.25	4.48	2.85	.4079	.1001	.096	.0236
12	19.17	9.82	4.75	3.98	4.21	4.45	3.00	.3976	.0985	.094	.0234
12	19.17	12.50	4.66	1.65	1.89	2.12	1.38	.2454	.0596	.130	.0315
12	19.17	12.57	4.50	1.78	2.00	2.20	1.38	.2427	.0570	.121	.0285
12	19.17	17.69	4.32	.42	.68	.92	.42	.1225	.0277	.180	.0407
12	19.17	17.75	4.41	.38	.61	.85	.48	.1217	.0280	.200	.0459
12	19.17	22.00	4.53	.02	.26	.50	.21	.0792	.0187	.305	.0719
12	19.17	24.75	4.53	0	.23	.48	.24	.0626	.0149	.272	.0648
12	27.69	15.30	6.72	1.55	1.76	1.95	1.44	.2366	.0575	.134	.0327
12	27.69	17.77	6.70	1.00	1.24	1.48	.84	.1754	.0425	.141	.0343
12	27.69	21.50	6.57	.30	.42	.55	.48	.1198	.0284	.285	.0676
12	27.69	25.16	6.72	.18	.42	.65	.33	.0875	.0212	.208	.0505
12	36.21	12.20	9.22	5.35	5.59	5.82	3.78	.4866	.1240	.087	.0222
12	36.21	12.41	8.90	4.98	5.22	5.45	3.48	.4702	.1155	.090	.0221
12	36.21	15.19	8.93	2.50	2.69	2.88	2.22	.3139	.0775	.117	.0288
12	36.21	24.40	8.58	.42	.68	.92	.48	.1216	.0289	.179	.0425
12	36.21	25.40	8.52	.35	.58	.80	.45	.1122	.0264	.193	.0455
12	53.25	14.73	13.69	5.35	5.59	5.82	3.75	.4908	.1260	.088	.0225
12	53.25	16.40	13.43	3.80	3.95	4.10	2.97	.3960	.0999	.100	.0253
12	53.25	21.22	12.78	1.60	1.84	2.08	1.41	.2365	.0568	.129	.0309
12	53.25	24.28	12.81	1.00	1.24	1.48	.90	.1807	.0435	.146	.0351
12	53.25	25.29	12.74	1.02	1.26	1.50	.84	.1665	.0400	.132	.0317
12	70.29	17.23	17.86	5.30	5.49	5.68	3.50	.4735	.1203	.086	.0219
12	70.29	21.20	17.32	2.52	2.78	3.02	2.10	.3128	.0771	.113	.0277
12	70.29	23.97	17.10	1.68	1.94	2.20	1.44	.2447	.0595	.126	.0307
12	70.29	25.16	16.85	1.50	1.71	1.92	1.25	.2221	.0532	.130	.0311
12	87.33	18.60	22.79	5.50	5.74	5.98	3.74	.5049	.1317	.088	.0229
12	87.33	20.98	22.16	3.95	4.18	4.42	2.79	.3968	.1007	.095	.0241
12	87.33	24.34	21.58	2.52	2.76	3.00	1.93	.2948	.0729	.107	.0264
12	87.33	25.32	21.54	2.15	2.38	2.62	1.70	.2724	.0672	.114	.0282
18	.85	3.05	.18	.48	.61	.75	.47	.1828	.0430	.300	.0705
18	.85	3.72	.20	.22	.36	.50	.28	.1228	.0318	.341	.0883
18	2.13	4.21	.76	.88	1.01	1.15	.89	.2404	.0857	.238	.0849
18	2.13	4.27	.62	.62	.78	.92	.63	.2337	.0680	.300	.0872
18	2.13	4.88	.66	.55	.68	.82	.79	.1789	.0554	.263	.0815
18	2.13	7.32	.73	.12	.26	.40	.52	.0795	.0274	.306	.1054
18	6.39	10.37	2.16	.20	.34	.48	.45	.1188	.0402	.349	.1162
18	6.39	13.12	2.16	0	.14	.28	.42	.0742	.0251	.530	.1793
18	10.65	9.46	3.65	.88	1.02	1.15	.76	.2380	.0815	.233	.0799
18	10.65	9.49	3.57	.75	.91	1.08	.63	.2365	.0793	.260	.0871

NACA

TABLE I - Continued

EXPERIMENTAL DATA OBTAINED FOR A PLANING SURFACE HAVING A 20° ANGLE OF DEAD RISE

LANGLEY TANK MODEL 276

Trim, τ, deg	C_Δ	C_V	C_R	$\frac{l_c}{b}$	$\frac{l_m}{b}$	$\frac{l_k}{b}$	$\frac{l_p}{b}$	C_{L_b}	C_{D_b}	C_{L_S}	C_{D_S}
18	10.65	10.92	3.67	0.50	0.64	0.78	0.43	0.1786	0.0615	0.279	0.0961
18	10.65	16.23	3.61	0	.14	.28	.20	.0809	.0274	.578	.1957
18	19.17	8.78	6.66	2.50	2.64	2.78	1.84	.4973	.1730	.188	.0655
18	19.17	8.88	6.46	2.60	2.72	2.82	1.72	.4862	.1650	.179	.0607
18	19.17	9.88	6.60	1.85	1.99	2.12	1.40	.3928	.1350	.197	.0678
18	19.17	9.91	6.53	1.80	1.93	2.05	1.33	.3904	.1330	.202	.0689
18	19.17	12.50	6.64	.85	.99	1.12	.70	.2454	.0840	.248	.0848
18	19.17	17.54	6.54	.25	.39	.52	.30	.1246	.0424	.319	.1087
18	19.17	21.90	6.52	0	.14	.28	.19	.0799	.0271	.571	.1935
18	19.17	25.16	6.50	0	.14	.28	.08	.0606	.0206	.433	.1471
18	27.69	15.13	9.27	.80	.95	1.10	.58	.2419	.0810	.255	.0853
18	27.69	15.16	9.41	.82	.96	1.10	.66	.2410	.0820	.251	.0854
18	27.69	17.60	9.43	.50	.64	.78	.43	.1788	.0610	.279	.0953
18	27.69	21.20	9.20	.25	.39	.52	.23	.1232	.0407	.316	.1044
18	27.69	25.31	9.37	0	.14	.28	.04	.0865	.0293	.618	.2093
18	36.21	12.35	12.31	2.50	2.63	2.75	1.74	.4748	.1610	.181	.0612
18	36.21	15.19	12.16	1.22	1.37	1.50	.95	.3140	.1050	.229	.0766
18	36.21	17.02	12.26	.88	1.01	1.15	.71	.2500	.0845	.248	.0837
18	36.21	24.64	11.98	.22	.36	.50	.34	.1193	.0395	.331	.1097
18	53.25	14.70	18.16	2.55	2.66	2.78	1.81	.4928	.1681	.185	.0632
18	53.25	16.53	18.11	1.78	1.93	2.08	1.27	.3898	.1330	.202	.0689
18	53.25	21.11	17.89	.75	.87	1.00	.62	.2390	.0803	.275	.0923
18	53.25	24.40	17.90	.50	.64	.78	.44	.1790	.0601	.280	.0939
18	53.25	25.07	18.09	.38	.54	.70	.42	.1694	.0576	.314	.1067
18	70.29	17.23	24.31	2.45	2.58	2.70	1.72	.4735	.1640	.184	.0636
18	70.29	21.20	23.98	1.15	1.29	1.42	.96	.3128	.1067	.242	.0827
18	70.29	24.25	23.64	.75	.87	1.00	.65	.2391	.0804	.275	.0924
18	70.29	25.47	23.83	.70	.84	.98	.58	.2167	.0735	.258	.0875
18	87.33	18.70	29.78	2.40	2.54	2.68	1.82	.4995	.1703	.197	.0670
18	87.33	20.89	29.50	1.75	1.89	2.02	1.36	.4002	.1352	.212	.0715
18	87.33	23.64	29.14	1.12	1.28	1.42	.97	.3125	.1043	.244	.0815
18	87.33	25.25	29.10	.80	.97	1.15	.83	.2740	.0910	.282	.0938
24	2.13	4.21	1.00	.58	.67	.75	---	.2404	.1095	.359	.1634
24	6.39	10.10	2.89	.15	.23	.32	.09	.1253	.0568	.545	.2470
24	6.39	12.72	2.76	0	.16	.32	.06	.0790	.0341	.494	.2131
24	10.65	9.36	4.80	.62	.71	.80	.36	.2431	.1095	.342	.1542
24	10.65	10.98	4.74	.32	.45	.58	.18	.1767	.0787	.393	.1749
24	10.65	16.41	4.86	---	.15	.30	---	.0792	.0362	.528	.2413
24	19.17	8.75	8.76	1.75	1.82	1.88	1.05	.5008	.2280	.275	.1253
24	19.17	9.91	8.64	1.15	1.24	1.32	.78	.3904	.1760	.315	.1419
24	19.17	12.41	8.46	.60	.71	.82	.42	.2490	.1099	.351	.1548
24	19.17	17.69	8.53	.15	.28	.40	.18	.1225	.0546	.438	.1950
24	19.17	25.22	8.72	0	.09	.18	.06	.0603	.0274	.670	.3044
24	27.69	15.04	12.38	.62	.71	.80	.48	.2448	.1095	.345	.1542
24	27.69	17.72	12.27	.32	.45	.58	.24	.1764	.0781	.392	.1736
24	27.69	21.20	12.32	.18	.29	.40	.21	.1232	.0548	.425	.1890
24	27.69	25.07	12.23	.12	.27	.40	.06	.0882	.0391	.327	.1448
24	36.21	11.99	16.48	1.45	1.63	1.80	1.20	.5038	.2300	.309	.1411
24	36.21	14.88	16.23	.92	1.00	1.08	.66	.3271	.1470	.327	.1470
24	36.21	20.01	16.06	.35	.46	.58	.27	.1809	.0800	.393	.1739
24	36.21	24.92	16.34	.12	.27	.40	.24	.1166	.0527	.432	.1952
24	53.25	14.58	24.04	1.55	1.70	1.85	1.17	.5010	.2270	.295	.1335
24	53.25	16.35	23.85	1.15	1.30	1.45	.90	.3984	.1784	.306	.1372
24	53.25	20.74	23.78	.62	.70	.78	.42	.2476	.1105	.354	.1579
24	53.25	24.31	23.85	.25	.40	.55	.27	.1802	.0805	.450	.2012
24	70.29	16.78	30.57	1.75	1.85	1.95	1.20	.4993	.2160	.270	.1168
24	70.29	16.93	31.60	1.70	1.79	1.88	1.13	.4905	.2210	.274	.1235
24	70.29	17.08	32.15	1.55	1.64	1.72	.99	.4819	.2210	.294	.1348
24	70.29	20.98	31.46	.90	.99	1.08	.60	.3194	.1429	.323	.1443
24	70.29	25.01	31.66	.50	.59	.68	.34	.2242	.1010	.381	.1712
24	87.33	18.60	39.34	1.65	1.74	1.82	1.11	.5049	.2270	.290	.1305
24	87.33	23.52	39.22	.88	.96	1.05	---	.3157	.1418	.329	.1477
30	.85	4.58	.44	0	.06	.12	---	.0810	.0419	1.350	.6983
30	2.13	3.11	1.21	.90	.96	1.02	.78	.4405	.2440	.459	.2542
30	2.13	4.12	1.11	.48	.54	.60	.33	.2510	.1310	.465	.2426
30	2.13	4.21	1.21	.50	.56	.62	.30	.2404	.1345	.429	.2402
30	2.13	4.82	1.12	.30	.36	.42	.18	.1834	.0964	.509	.2678
30	2.13	7.23	1.15	0	.06	.12	.27	.0815	.0441	1.358	.7350
30	6.39	10.10	8.36	.12	.19	.25	.15	.1253	.0696	.659	.3663
30	6.39	12.75	8.38	0	.06	.12	.03	.0784	.0441	1.307	.7350
30	10.65	9.39	6.14	.52	.59	.65	.24	.2416	.1395	.409	.2364
30	10.65	10.83	14.16	.35	.41	.48	.21	.1816	.1028	.443	.2507

NACA

TABLE I - Concluded

EXPERIMENTAL DATA OBTAINED FOR A PLANING SURFACE HAVING A 20° ANGLE OF DEAD RISE

LANGLEY TANK MODEL 276

Trim, τ, deg	C_Δ	C_V	C_R	$\frac{l_c}{b}$	$\frac{l_m}{b}$	$\frac{l_k}{b}$	$\frac{l_p}{b}$	C_{L_b}	C_{D_b}	C_{L_S}	C_{D_S}
30	10.65	11.19	6.10	0.32	0.39	0.45	0.06	0.1701	0.0974	0.436	0.2497
30	10.65	16.26	5.87	---	---	---	---	.0806	.0444	---	---
30	19.17	8.72	11.18	1.30	1.36	1.42	.78	.5042	.2940	.371	.2162
30	19.17	9.70	10.97	.98	1.04	1.10	.60	.4075	.2330	.392	.2240
30	19.17	9.76	11.12	1.00	1.06	1.12	.60	.4025	.2350	.380	.2217
30	19.17	12.47	10.83	.50	.57	.65	.33	.2466	.1395	.433	.2447
30	19.17	17.48	10.66	.18	.28	.38	.18	.1255	.0696	.448	.2486
30	19.17	21.84	10.58	.12	.19	.25	.18	.0804	.0444	.423	.2337
30	27.69	15.10	15.75	.50	.56	.62	.39	.2429	.1380	.434	.2464
30	27.69	17.75	15.80	.35	.41	.48	.30	.1758	.1005	.429	.2451
30	27.69	21.35	15.69	.12	.21	.30	.24	.1215	.0689	.579	.3281
30	27.69	25.32	15.62	0	.06	.12	.21	.0865	.0487	1.442	.8117
30	36.21	12.20	20.88	1.28	1.34	1.40	.84	.4866	.2810	.363	.2097
30	36.21	14.94	20.95	.75	.81	.87	.48	.3245	.1870	.401	.2309
30	36.21	15.10	20.74	.72	.79	.85	.45	.3176	.1820	.402	.2304
30	36.21	15.13	21.09	.78	.85	.92	.45	.3164	.1830	.372	.2153
30	36.21	15.25	20.68	.75	.81	.88	.48	.3114	.1778	.384	.2195
30	36.21	20.01	20.65	.32	.39	.45	.18	.1810	.1030	.464	.2641
30	36.21	20.13	20.94	.32	.41	.50	.21	.1790	.1030	.437	.2512
30	36.21	20.19	21.07	.32	.39	.45	.24	.1777	.1035	.456	.2654
30	36.21	24.71	20.29	.12	.19	.25	.21	.1186	.0667	.624	.3511
30	36.21	24.86	20.33	.12	.19	.25	.30	.1172	.0674	.617	.3547
30	53.25	14.61	30.50	1.32	1.39	1.45	.84	.4989	.2860	.359	.2058
30	53.25	16.20	30.63	.98	1.04	1.10	.63	.4058	.2340	.390	.2250
30	53.25	18.30	30.65	.75	.81	.88	.45	.3180	.1830	.393	.2259
30	53.25	20.98	30.55	.50	.56	.62	.30	.2420	.1388	.432	.2479
30	53.25	24.28	30.45	.32	.39	.45	.12	.1807	.1030	.463	.2641
30	53.25	25.22	30.50	.25	.31	.38	.23	.1674	.0960	.540	.3097

TABLE II

EXPERIMENTAL DATA OBTAINED FOR A PLANING SURFACE HAVING A 40° ANGLE OF DEAD RISE

LANGLEY TANK MODEL 277

[Average kinematic viscosity = 11.60 x 10^{-6} ft^2/sec; specific weight of tank water = 63.4 lb/cu ft]

Trim, τ, deg	C_Δ	C_V	C_R	$\frac{l_c}{b}$	$\frac{l_m}{b}$	$\frac{l_k}{b}$	$\frac{l_p}{b}$	C_{L_b}	C_{D_b}	C_{L_S}	C_{D_S}
4	0.85	4.67	0.30	---	---	---	---	0.0779	0.0275	---	---
4	.85	6.19	.43	2.00	3.62	5.25	---	.0444	.0225	0.0123	0.0062
4	.85	7.84	.49	1.25	2.82	4.38	1.29	.0277	.0159	.0098	.0056
4	2.13	10.80	1.18	1.25	3.00	4.75	2.19	.0364	.0202	.0121	.0067
4	4.26	13.63	1.91	1.75	3.44	5.12	2.37	.0459	.0206	.0133	.0060
4	6.39	16.99	2.95	1.88	3.50	5.12	2.43	.0444	.0204	.0127	.0058
4	6.39	20.13	3.10	---	---	---	1.89	.0315	.0153	---	---
4	10.65	16.50	4.72	5.25	7.00	8.75	4.26	.0784	.0346	.0112	.0049
4	10.65	18.09	5.24	5.00	6.75	8.50	3.81	.0651	.0319	.0096	.0047
4	10.65	19.70	5.35	3.25	5.08	6.90	3.27	.0549	.0276	.0108	.0054
4	10.65	19.73	5.30	3.62	5.37	7.12	3.42	.0547	.0272	.0102	.0051
4	10.65	19.82	5.45	3.45	5.26	7.08	3.36	.0542	.0276	.0103	.0052
4	10.65	21.75	5.33	2.50	4.25	6.00	2.73	.0450	.0225	.0106	.0053
4	10.65	21.81	4.85	1.88	3.63	5.38	2.46	.0448	.0204	.0123	.0056
4	10.65	24.55	5.00	1.25	3.00	4.75	1.98	.0354	.0166	.0118	.0055
4	10.65	24.55	5.58	1.75	3.50	5.25	2.25	.0354	.0185	.0101	.0053
4	19.17	23.12	8.72	4.75	6.50	8.25	4.11	.0717	.0325	.0110	.0050
4	19.17	25.16	8.73	4.25	6.00	7.75	3.27	.0606	.0276	.0101	.0046
6	.85	6.16	.29	0	1.17	2.35	---	.0448	.0152	.0383	.0130
6	2.13	9.70	.73	.38	1.54	2.70	1.25	.0453	.0155	.0294	.0101
6	4.26	10.43	1.49	2.00	3.16	4.32	2.19	.0784	.0274	.0248	.0087
6	4.26	13.69	1.50	1.00	2.16	3.32	1.29	.0455	.0160	.0211	.0074
6	6.39	12.45	1.97	2.37	3.54	4.70	2.43	.0824	.0255	.0280	.0087
6	6.39	16.99	2.26	.75	1.91	3.07	1.27	.0444	.0156	.0232	.0082
6	10.65	13.12	3.34	4.62	5.78	6.95	3.36	.1237	.0388	.0214	.0067
6	10.65	13.21	3.41	4.75	5.93	7.02	3.39	.1220	.0391	.0206	.0066
6	10.65	16.26	3.48	2.25	3.41	4.57	2.34	.0806	.0264	.0236	.0077
6	10.65	21.81	3.67	.75	1.86	3.00	1.31	.0448	.0154	.0241	.0083
6	10.65	25.16	3.98	.50	1.66	2.82	1.04	.0338	.0126	.0204	.0076
6	19.17	15.49	6.32	6.70	7.77	8.82	5.10	.1598	.0528	.0206	.0068
6	19.17	17.75	5.97	5.12	6.19	7.25	3.60	.1217	.0379	.0197	.0061
6	19.17	21.87	6.08	2.75	3.82	4.90	2.25	.0800	.0254	.0209	.0066
6	19.17	24.80	6.14	1.75	3.00	4.25	1.68	.0623	.0198	.0208	.0066
6	27.69	20.95	9.03	5.00	6.16	7.32	3.87	.1260	.0412	.0205	.0067
6	27.69	22.88	8.99	4.12	5.26	6.40	3.27	.1058	.0343	.0201	.0065
6	27.69	25.25	8.80	2.88	4.00	5.12	2.61	.0869	.0276	.0217	.0069
6	27.69	25.99	9.01	2.75	3.91	5.02	2.58	.0820	.0267	.0210	.0068
6	36.21	21.35	11.64	6.50	7.61	8.82	4.80	.1590	.0512	.0209	.0067
6	36.21	24.10	11.74	5.12	6.28	7.42	4.02	.1247	.0404	.0199	.0064
6	36.21	24.92	11.37	4.25	5.41	6.58	3.60	.1166	.0366	.0216	.0068
12	.85	4.58	.21	.30	.81	1.32	.60	.0808	.0200	.0998	.0247
12	2.13	7.23	.63	.45	1.04	1.62	.62	.0816	.0241	.0785	.0232
12	4.26	6.92	1.17	1.70	2.21	2.72	1.47	.1779	.0497	.0805	.0225
12	4.26	10.37	1.22	.35	.86	1.37	.71	.0792	.0226	.0921	.0263
12	6.39	10.22	1.84	.85	1.36	1.87	1.00	.1224	.0351	.0900	.0258
12	6.39	12.45	1.73	.40	.91	1.42	.67	.0825	.0223	.0907	.0245
12	6.39	12.45	1.61	.40	.96	1.52	.99	.0824	.0208	.0858	.0217
12	10.65	10.92	3.08	1.82	2.33	2.85	1.61	.1786	.0516	.0767	.0221
12	10.65	16.56	3.11	.38	.89	1.40	.68	.0776	.0226	.0872	.0254
12	10.65	19.83	3.28	.10	.62	1.15	.40	.0542	.0167	.0874	.0269
12	19.17	11.04	5.50	4.38	4.89	5.40	3.00	.3146	.0904	.0643	.0185
12	19.17	12.41	5.40	3.12	3.63	4.15	2.31	.2489	.0701	.0686	.0193
12	19.17	12.45	5.34	3.05	3.61	4.17	2.25	.2474	.0688	.0685	.0191
12	19.17	12.50	5.50	3.28	3.75	4.22	2.31	.2454	.0706	.0654	.0188
12	19.17	12.60	5.53	2.75	3.25	3.75	2.28	.2415	.0697	.0743	.0214
12	19.17	17.48	5.21	1.08	1.62	2.15	1.35	.1255	.0342	.0775	.0211
12	19.17	17.54	5.31	.92	1.42	1.92	1.05	.1246	.0346	.0877	.0244
12	19.17	17.69	5.42	1.00	1.51	2.02	1.02	.1225	.0346	.0811	.0229
12	19.17	21.87	5.57	.25	.76	1.27	.60	.0800	.0232	.1053	.0305
12	19.17	24.77	5.76	0	.51	1.02	.47	.0626	.0188	.1227	.0369
12	27.69	15.19	7.87	3.00	3.51	4.02	2.22	.2400	.0684	.0684	.0195
12	27.69	17.78	7.88	1.88	2.39	2.90	1.53	.1752	.0500	.0733	.0209
12	27.69	21.29	7.85	1.00	1.51	2.02	1.02	.1220	.0346	.0808	.0229
12	27.69	23.27	7.94	.62	1.13	1.65	.82	.1022	.0292	.0904	.0258
12	27.69	25.10	8.03	.45	.96	1.47	.71	.0879	.0255	.0916	.0266
12	36.21	12.20	10.27	7.38	7.85	8.32	4.71	.4866	.1380	.0620	.0176
12	36.21	12.45	10.02	7.12	7.66	8.20	---	.4672	.1293	.0610	.0169
12	36.21	12.50	10.33	7.40	7.90	8.40	4.47	.4635	.1320	.0587	.0167
12	36.21	14.85	10.24	4.52	5.03	5.55	3.15	.3284	.0928	.0653	.0184
12	36.21	15.25	10.46	3.95	4.48	5.00	3.09	.3114	.0898	.0695	.0200
12	36.21	20.19	10.24	1.88	2.39	2.90	1.56	.1776	.0504	.0743	.0211
12	36.21	24.40	10.06	.80	1.31	1.82	.99	.1216	.0338	.0928	.0258

NACA

TABLE II - Continued

EXPERIMENTAL DATA OBTAINED FOR A PLANING SURFACE HAVING A 40° ANGLE OF DEAD RISE

LANGLEY TANK MODEL 277

Trim, τ, deg	C_Δ	C_V	C_R	$\frac{l_c}{b}$	$\frac{l_m}{b}$	$\frac{l_k}{b}$	$\frac{l_p}{b}$	C_{L_b}	C_{D_b}	C_{L_S}	C_{D_S}
12	36.21	25.13	10.29	---	---	---	0.90	0.1147	0.0326	---	---
12	36.21	25.16	10.04	0.88	1.39	1.90	.93	.1142	.0317	0.0822	0.0228
12	53.25	14.49	15.46	7.50	8.05	8.52	4.34	.5072	.1474	.0630	.0183
12	53.25	15.19	15.03	7.62	8.13	8.65	4.17	.4616	.1303	.0568	.0160
12	53.25	16.26	14.87	5.85	6.36	6.87	3.90	.4028	.1124	.0633	.0177
12	53.25	16.32	15.54	5.75	6.25	6.75	3.96	.3999	.1166	.0640	.0187
12	53.25	20.28	15.12	3.37	3.89	4.40	2.49	.2589	.0735	.0666	.0189
12	53.25	20.34	15.01	3.18	3.68	4.18	2.49	.2574	.0726	.0699	.0197
12	53.25	20.95	15.17	3.00	3.51	4.02	2.28	.2426	.0692	.0691	.0197
12	53.25	21.26	14.98	3.12	3.68	4.15	2.34	.2356	.0662	.0640	.0180
12	53.25	24.40	15.17	1.50	2.06	2.62	1.63	.1788	.0508	.0868	.0247
12	70.29	16.90	20.52	7.25	7.79	8.32	3.72	.4920	.1436	.0632	.0184
12	70.29	20.92	20.27	4.38	4.86	5.35	3.03	.3212	.0924	.0661	.0190
12	70.29	24.64	20.09	2.80	3.31	3.82	2.16	.2315	.0662	.0699	.0200
12	87.33	24.46	25.32	3.95	4.45	4.95	2.79	.2918	.0846	.0656	.0190
18	.85	4.61	.28	.10	.46	.72	---	.0800	.0262	.1739	.0570
18	2.13	4.21	.75	1.25	1.56	1.88	1.03	.2404	.0848	.1541	.0544
18	2.13	4.88	.75	.88	1.19	1.50	.84	.1788	.0630	.1502	.0529
18	2.13	7.32	.82	.15	.46	.78	.36	.0795	.0307	.1728	.0667
18	6.39	6.41	2.28	1.98	2.29	2.60	1.53	.3110	.1110	.1358	.0489
18	6.39	10.22	2.41	.50	.81	1.12	.57	.1224	.0462	.1511	.0570
18	6.39	13.72	2.35	.10	.41	.72	.30	.0678	.0250	.1654	.0610
18	10.65	9.30	3.89	1.50	1.81	2.12	1.17	.2463	.0898	.1361	.0496
18	10.65	9.46	3.76	1.50	1.81	2.12	1.14	.2380	.0840	.1315	.0464
18	10.65	10.89	3.86	.88	1.19	1.50	.78	.1796	.0652	.1509	.0548
18	10.65	16.10	3.91	.12	.48	.85	.42	.0822	.0302	.1712	.0629
18	19.17	8.72	6.99	3.50	3.81	4.12	2.31	.5042	.1838	.1323	.0482
18	19.17	9.70	6.99	2.90	3.21	3.52	1.97	.4075	.1486	.1269	.0463
18	19.17	12.45	6.96	1.50	1.83	2.15	1.23	.2474	.0898	.1352	.0491
18	19.17	12.45	6.59	1.60	1.91	2.22	1.34	.2474	.0850	.1295	.0445
18	19.17	12.47	7.02	1.45	1.76	2.08	1.19	.2464	.0904	.1400	.0514
18	19.17	12.50	6.59	1.55	1.85	2.15	1.34	.2454	.0844	.1326	.0456
18	19.17	17.45	7.11	.50	.81	1.12	.61	.1260	.0468	.1556	.0578
18	19.17	21.96	7.22	.20	.52	.85	.44	.0795	.0300	.1529	.0577
18	27.69	15.01	10.02	1.50	1.82	2.12	1.11	.2458	.0890	.1350	.0489
18	27.69	15.25	9.84	1.25	1.56	1.88	1.03	.2380	.0848	.1526	.0544
18	27.69	17.51	9.95	.88	1.19	1.50	.78	.1806	.0649	.1518	.0545
18	27.69	17.69	9.99	.75	1.06	1.38	.75	.1770	.0638	.1670	.0602
18	27.69	20.98	10.19	.50	.81	1.12	.54	.1260	.0462	.1556	.0570
18	27.69	21.14	10.00	.50	.81	1.12	.57	.1240	.0448	.1531	.0553
18	27.69	22.88	9.99	.25	.56	.88	.41	.1058	.0380	.1889	.0679
18	36.21	12.05	13.37	3.88	4.19	4.50	2.56	.4988	.1842	.1190	.0440
18	36.21	12.20	13.32	3.95	4.26	4.58	2.49	.4866	.1788	.1142	.0420
18	36.21	12.20	13.26	3.88	4.16	4.45	2.64	.4866	.1782	.1170	.0430
18	36.21	15.16	13.18	2.20	2.51	2.82	1.59	.3152	.1148	.1256	.0457
18	36.21	16.65	13.06	1.50	1.81	2.12	1.27	.2612	.0942	.1443	.0520
18	36.21	20.34	13.07	1.00	1.31	1.62	.75	.1752	.0633	.1337	.0483
18	36.21	24.40	13.32	.50	.81	1.12	.54	.1216	.0447	.1501	.0552
18	36.21	25.16	13.06	.55	.86	1.17	.54	.1142	.0412	.1328	.0479
18	53.25	14.55	19.61	3.75	4.06	4.37	2.55	.5031	.1853	.1239	.0456
18	53.25	14.55	19.23	3.95	4.26	4.57	2.64	.5031	.1817	.1181	.0426
18	53.25	14.55	19.14	3.80	4.11	4.42	2.65	.5031	.1808	.1224	.0440
18	53.25	16.13	19.23	2.80	3.11	3.42	2.02	.4093	.1480	.1316	.0476
18	53.25	16.26	19.49	2.82	3.13	3.45	2.07	.4028	.1474	.1287	.0471
18	53.25	20.68	18.90	1.50	1.81	2.12	1.14	.2492	.0882	.1377	.0487
18	53.25	20.89	19.05	1.38	1.69	2.00	1.19	.2440	.0874	.1444	.0517
18	53.25	24.46	18.86	.88	1.19	1.50	.78	.1780	.0630	.1496	.0529
18	70.29	16.99	25.40	3.88	4.19	4.50	2.55	.4870	.1760	.1162	.0420
18	70.29	21.10	25.20	2.08	2.41	2.75	1.46	.3158	.1132	.1310	.0470
18	70.29	21.47	24.85	1.98	2.29	2.60	1.50	.3050	.1076	.1332	.0470
18	70.29	24.45	25.52	1.38	1.69	2.00	1.13	.2352	.0854	.1392	.0505
18	70.29	24.95	25.14	1.25	1.56	1.88	1.10	.2258	.0808	.1447	.0518
18	87.33	18.88	31.73	3.88	4.16	4.45	2.55	.4900	.1780	.1178	.0428
18	87.33	18.91	31.73	4.00	4.29	4.58	2.58	.4884	.1775	.1138	.0414
18	87.33	20.83	31.37	2.95	3.22	3.50	2.04	.4025	.1446	.1250	.0449
18	87.33	24.46	31.52	2.15	2.46	2.78	1.41	.2918	.1054	.1186	.0428
24	.85	4.64	.41	.05	.26	.48	.20	.0790	.0380	.3038	.1462
24	2.13	4.24	.98	.95	1.16	1.38	.72	.2369	.1096	.2042	.0945
24	2.13	7.26	1.04	.08	.32	.58	---	.0808	.0394	.2525	.1231
24	6.39	10.13	3.04	.32	.55	.78	.43	.1245	.0592	.2264	.1076
24	6.39	12.72	3.08	0	.21	.42	---	.0790	.0380	.3762	.1810
24	6.39	12.75	3.11	.12	.36	.60	.36	.0786	.0383	.2183	.1064

NACA

TABLE II - Continued

EXPERIMENTAL DATA OBTAINED FOR A PLANING SURFACE HAVING A 40° ANGLE OF DEAD RISE

LANGLEY TANK MODEL 277

Trim, τ, deg	C_Δ	C_V	C_R	$\frac{l_c}{b}$	$\frac{l_m}{b}$	$\frac{l_k}{b}$	$\frac{l_p}{b}$	C_{L_b}	C_{D_b}	C_{L_S}	C_{D_S}
24	10.65	6.53	5.02	2.44	2.65	2.86	1.62	0.4995	0.2355	0.1885	0.0889
24	10.65	7.29	5.04	1.85	2.04	2.22	1.32	.4008	.1897	.1965	.0440
24	10.65	9.27	5.00	.95	1.16	1.38	.78	.2478	.1162	.2136	.1001
24	10.65	10.83	5.02	.62	.84	1.05	.56	.1816	.0856	.2162	.1019
24	10.65	16.35	5.14	0	.30	.60	.32	.0797	.0384	.2657	.1280
24	19.17	8.75	8.89	2.50	2.71	2.92	1.68	.5008	.2322	.1848	.0857
24	19.17	9.70	9.03	1.92	2.12	2.32	1.32	.4075	.1919	.1922	.0905
24	19.17	12.42	8.82	1.00	1.21	1.42	---	.2485	.1142	.2054	.0944
24	19.17	12.47	8.82	.95	1.16	1.37	.80	.2466	.1132	.2126	.0976
24	19.17	12.57	9.05	.95	1.14	1.32	.75	.2426	.1146	.2128	.1005
24	19.17	17.60	9.16	.38	.56	.75	.39	.1238	.0592	.2211	.1057
24	19.17	21.96	9.20	.12	.38	.62	.24	.0795	.0382	.2092	.1005
24	27.69	11.74	13.01	2.00	2.19	2.38	1.29	.4018	.1888	.1835	.0862
24	27.69	15.01	13.07	.95	1.16	1.37	.74	.2458	.1160	.2119	.1000
24	27.69	17.69	13.02	.58	.79	1.00	.45	.1770	.0832	.2240	.1053
24	27.69	21.11	13.08	.35	.55	.75	.30	.1243	.0588	.2260	.1069
24	27.69	24.40	12.92	.12	.39	.65	.36	.0930	.0436	.2385	.1118
24	27.69	24.55	13.36	.25	.48	.70	.31	.0919	.0442	.1915	.0921
24	36.21	12.20	17.13	2.52	2.72	2.92	1.65	.4866	.2307	.1789	.0846
24	36.21	15.01	17.03	1.40	1.62	1.85	.96	.3214	.1512	.1984	.0933
24	36.21	20.19	16.89	.68	.89	1.10	.51	.1776	.0829	.1996	.0931
24	36.21	24.71	17.16	.35	.59	.82	.39	.1186	.0562	.2010	.0953
24	53.25	14.58	25.22	2.55	2.75	2.95	1.68	.5010	.2373	.1822	.0863
24	53.25	14.64	24.79	2.50	2.70	2.90	1.63	.4969	.2312	.1840	.0856
24	53.25	14.73	24.93	2.52	2.72	2.92	1.64	.4908	.2298	.1804	.0845
24	53.25	15.25	24.66	2.50	2.69	2.88	1.62	.4579	.2121	.1702	.0788
24	53.25	16.26	25.06	1.92	2.11	2.30	1.29	.4028	.1898	.1909	.0900
24	53.25	16.38	24.82	1.80	2.02	2.25	1.39	.3969	.1848	.1965	.0915
24	53.25	18.57	24.68	1.25	1.48	1.70	1.07	.3088	.1431	.2086	.0967
24	53.25	20.80	25.01	.98	1.18	1.38	.74	.2462	.1156	.2086	.0980
24	53.25	25.41	25.39	.48	.70	.92	.47	.1648	.0784	.2354	.1120
24	70.29	16.68	33.11	2.60	2.81	3.02	1.68	.5053	.2380	.1798	.0847
24	70.29	16.78	32.96	2.50	2.71	2.92	1.76	.4993	.2340	.1842	.0863
24	70.29	19.31	32.82	1.75	1.95	2.15	1.22	.3770	.1760	.1933	.0903
24	70.29	20.74	32.53	1.50	1.70	1.90	1.09	.3268	.1512	.1922	.0889
24	70.29	20.89	32.91	1.50	1.70	1.90	1.08	.3221	.1508	.1895	.0887
24	70.29	21.04	32.81	1.38	1.59	1.80	1.00	.3176	.1480	.1997	.0931
24	70.29	24.55	33.14	.98	1.18	1.38	.69	.2332	.1100	.1976	.0932
30	.85	4.61	.49	.02	.18	.32	---	.0800	.0462	.4444	.2567
30	2.13	4.18	1.21	.78	.92	1.08	.51	.2438	.1385	.2650	.1505
30	2.13	4.85	1.23	.50	.65	.80	.39	.1812	.1046	.2788	.1609
30	2.13	5.86	1.21	.25	.40	.55	.25	.1240	.0706	.3100	.1765
30	2.13	7.26	1.24	.10	.30	.50	.14	.0808	.0472	.2693	.1573
30	6.39	6.34	3.70	1.05	1.20	1.35	.67	.3179	.1841	.2649	.1534
30	6.39	10.07	3.75	.32	.49	.65	.25	.1260	.0740	.2571	.1510
30	6.39	12.87	3.83	.12	.31	.50	.18	.0772	.0462	.2490	.1490
30	10.65	7.23	6.39	1.12	1.28	1.42	.87	.4075	.2445	.3184	.1910
30	10.65	7.26	6.30	1.45	1.60	1.75	.97	.4041	.2300	.2526	.1494
30	10.65	8.08	6.28	1.12	1.28	1.42	.64	.3262	.1924	.2548	.1503
30	10.65	9.21	6.43	.80	.95	1.10	.49	.2511	.1518	.2643	.1598
30	10.65	9.21	6.39	.80	.94	1.08	.57	.2511	.1508	.2671	.1604
30	10.65	9.36	6.36	.75	.90	1.05	.55	.2431	.1452	.2701	.1613
30	10.65	10.86	6.37	.55	.70	.85	.37	.1806	.1082	.2580	.1546
30	10.65	10.89	6.28	.50	.65	.80	.30	.1796	.1058	.2763	.1628
30	10.65	16.07	6.38	.12	.31	.50	.18	.0824	.0496	.2658	.1600
30	19.17	8.75	11.43	1.88	2.03	2.18	1.08	.5008	.2986	.2467	.1471
30	19.17	8.75	11.37	1.90	2.02	2.15	1.29	.5008	.2972	.2479	.1471
30	19.17	9.00	11.30	1.80	1.95	2.10	1.00	.4733	.2790	.2427	.1431
30	19.17	9.67	11.49	1.55	1.68	1.80	.84	.4100	.2457	.2440	.1462
30	19.17	9.67	11.31	1.52	1.65	1.78	.85	.4100	.2419	.2485	.1466
30	19.17	9.82	11.38	1.48	1.59	1.70	.78	.3978	.2360	.2502	.1484
30	19.17	12.41	11.48	.80	.96	1.12	.45	.2489	.1490	.2593	.1552
30	19.17	12.44	---	.80	.95	1.10	---	.2478	---	.2608	---
30	19.17	12.50	11.29	.88	1.03	1.18	.58	.2454	.1445	.2383	.1403
30	19.17	12.57	11.41	.78	.92	1.08	.48	.2426	.1444	.2637	.1570
30	19.17	12.87	11.40	.75	.89	1.02	.42	.2315	.1376	.2601	.1546
30	19.17	14.70	11.46	.55	.70	.85	.34	.1776	.1061	.2537	.1516
30	19.17	17.60	11.48	.28	.46	.65	.24	.1240	.0742	.2696	.1613
30	19.17	24.28	11.53	0	.15	.30	---	.0648	.0392	.4320	.2613
30	27.69	10.61	16.41	1.92	2.06	2.20	1.11	.4920	.2918	.2645	.1569
30	27.69	15.19	16.28	.75	.90	1.05	.48	.2400	.1411	.2667	.1568
30	27.69	17.60	16.35	.50	.65	.80	.30	.1788	.1058	.2751	.1628

NACA

TABLE II - Concluded

EXPERIMENTAL DATA OBTAINED FOR A PLANING SURFACE HAVING A 40° ANGLE OF DEAD RISE

LANGLEY TANK MODEL 277

Trim, τ, deg	C_Δ	C_V	C_R	$\frac{l_c}{b}$	$\frac{l_m}{b}$	$\frac{l_k}{b}$	$\frac{l_p}{b}$	C_{L_b}	C_{D_b}	C_{L_S}	C_{D_S}
30	27.69	21.14	16.35	0.30	0.50	0.70	0.24	0.1240	0.0732	0.2480	0.1464
30	27.69	21.35	16.35	.18	.31	.45	.24	.1215	.0716	.3919	.2310
30	27.69	24.49	16.30	.12	.32	.52	.20	.0924	.0544	.2888	.1700
30	36.21	12.11	21.51	1.95	2.05	2.15	1.20	.4938	.2934	.2409	.1431
30	36.21	12.11	21.45	1.88	2.00	2.12	1.17	.4938	.2925	.2469	.1462
30	36.21	12.14	21.36	1.90	2.04	2.18	1.14	.4914	.2899	.2409	.1421
30	36.21	15.07	21.45	1.15	1.26	1.38	.69	.3189	.1889	.2531	.1499
30	36.21	15.25	21.39	1.10	1.25	1.40	.69	.3114	.1840	.2491	.1472
30	36.21	17.23	21.52	.80	.95	1.10	.42	.2439	.1448	.2567	.1524
30	36.21	19.86	21.42	.52	.68	.82	.38	.1836	.1086	.2700	.1597
30	36.21	20.13	21.11	.55	.70	.85	.30	.1788	.1040	.2554	.1486
30	36.21	24.25	21.48	.25	.52	.80	.15	.1230	.0730	.2365	.1404
30	36.21	25.25	21.75	.20	.39	.58	.22	.1136	.0680	.2913	.1744
30	53.25	14.79	31.37	1.92	2.02	2.12	1.11	.4869	.2866	.2410	.1419
30	53.25	16.29	31.28	1.55	1.70	1.85	.90	.4014	.2358	.2361	.1387
30	53.25	16.41	31.41	1.52	1.62	1.72	.87	.3955	.2333	.2441	.1440
30	53.25	20.83	31.26	.62	.78	.92	.51	.2454	.1441	.3146	.1847
30	53.25	25.44	31.67	.60	.75	.90	.27	.1648	.0979	.2197	.1305
30	70.29	16.87	41.50	2.12	2.27	2.42	1.17	.4940	.2918	.2176	.1285
30	70.29	20.98	41.36	1.20	1.35	1.50	.72	.3194	.1879	.2366	.1392
30	70.29	22.51	40.73	.95	1.10	1.25	.54	.2774	.1607	.2522	.1461
30	70.29	22.69	41.15	.98	1.14	1.30	.60	.2730	.1599	.2395	.1403
30	70.29	24.95	41.30	.72	.87	1.02	.46	.2258	.1327	.2595	.1525
30	70.29	25.01	41.33	.80	.94	1.08	.47	.2247	.1322	.2390	.1406
30	87.33	18.60	52.00	2.00	2.15	2.30	1.23	.5048	.3006	.2348	.1398
30	87.33	18.70	51.31	1.98	2.12	2.28	1.23	.4995	.2934	.2356	.1384
30	87.33	18.70	51.29	1.95	2.09	2.22	1.23	.4995	.2934	.2390	.1404
30	87.33	21.04	51.19	1.62	1.78	1.92	.93	.3946	.2313	.2217	.1299
30	87.33	22.88	50.99	1.12	1.28	1.42	.66	.3336	.1948	.2606	.1522
30	87.33	25.22	51.32	.88	1.03	1.18	.58	.2746	.1614	.2666	.1567

NACA

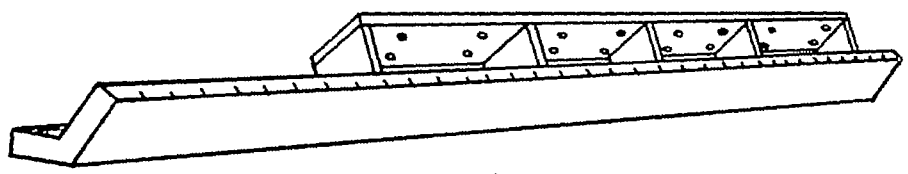

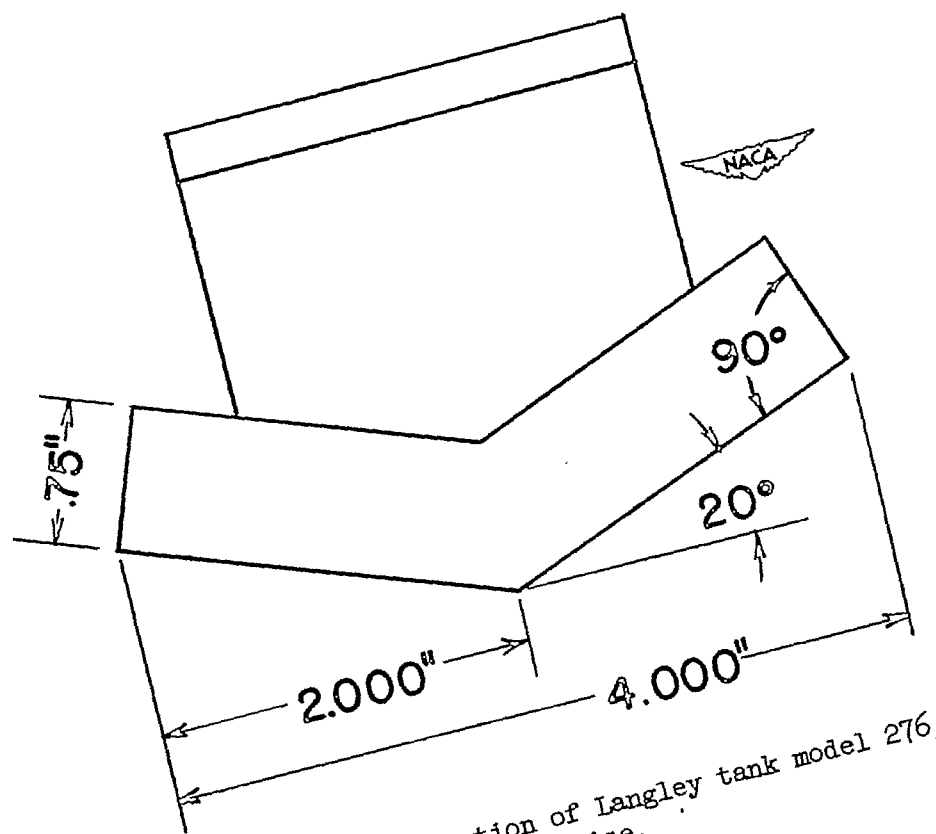

Figure 1.- Sketch and cross section of Langley tank model 276, 20° angle of dead rise.

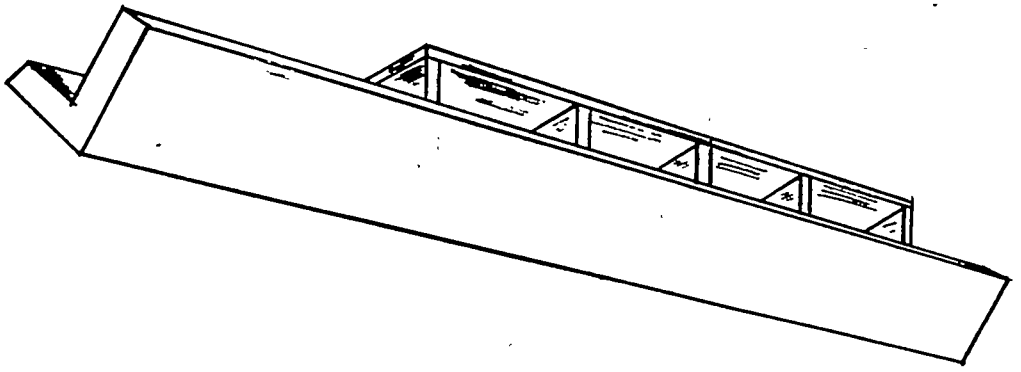

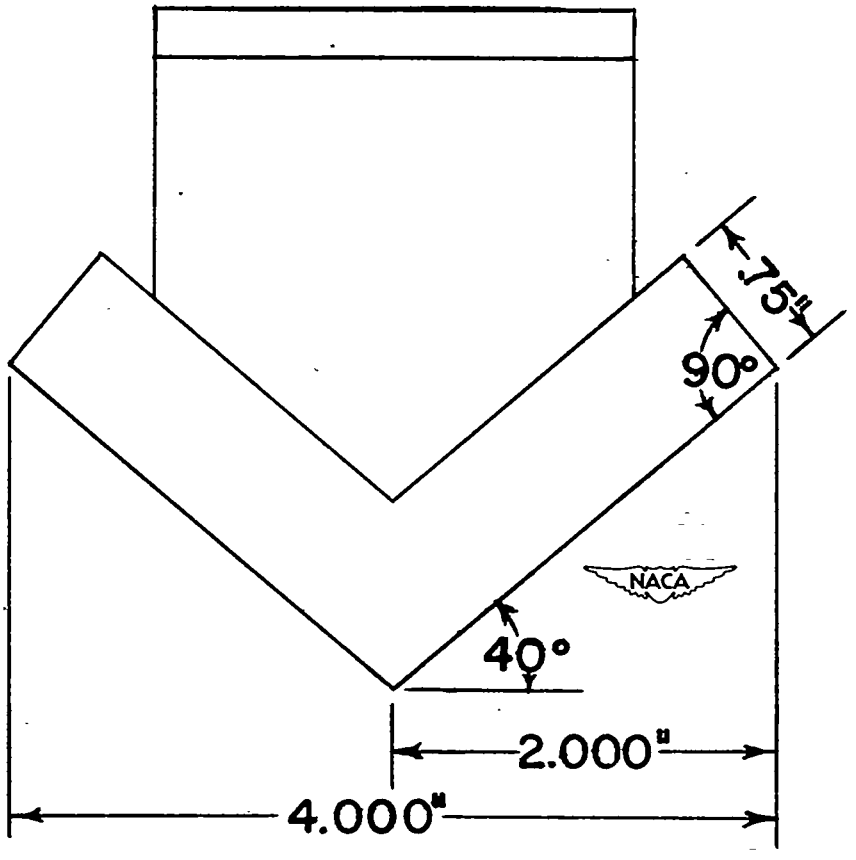

Figure 2.- Sketch and cross section of Langley tank model 277, 40° angle of dead rise.

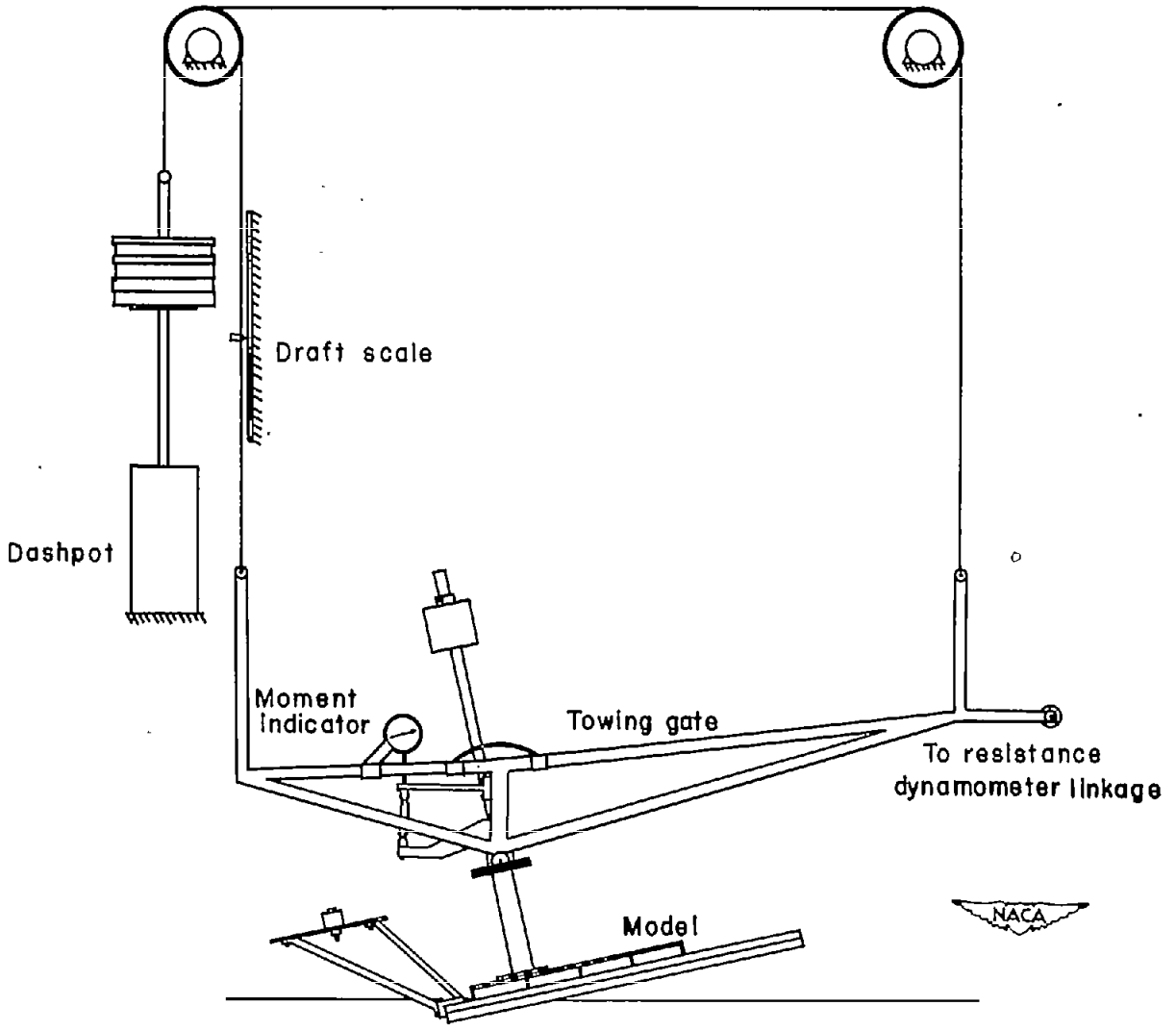

Figure 3.- Setup of model and towing gear.

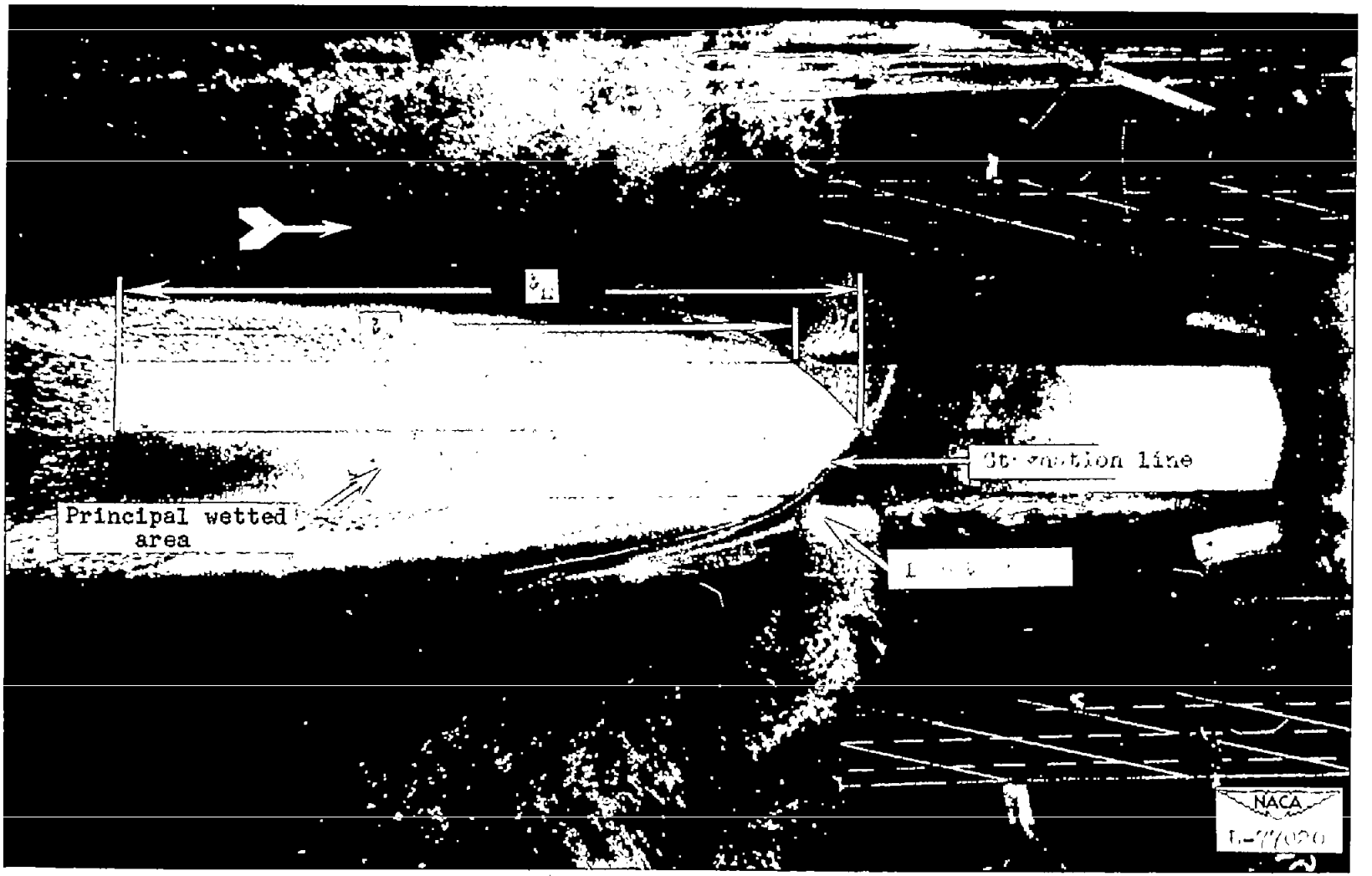

Figure 4.- Typical underwater photograph.

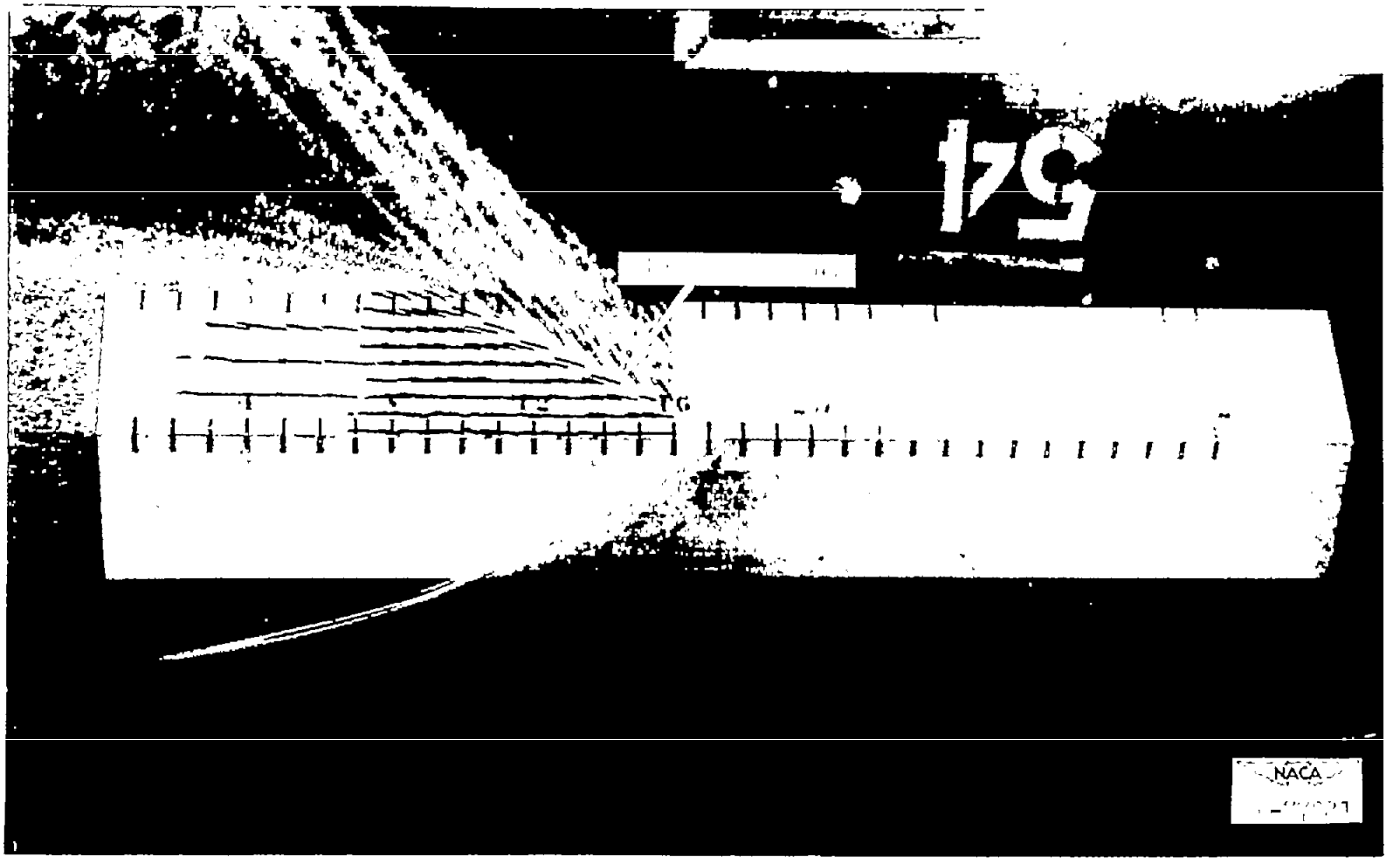

Figure 5.- Typical flow pattern for a V-shaped surface having a 20° angle of dead rise.

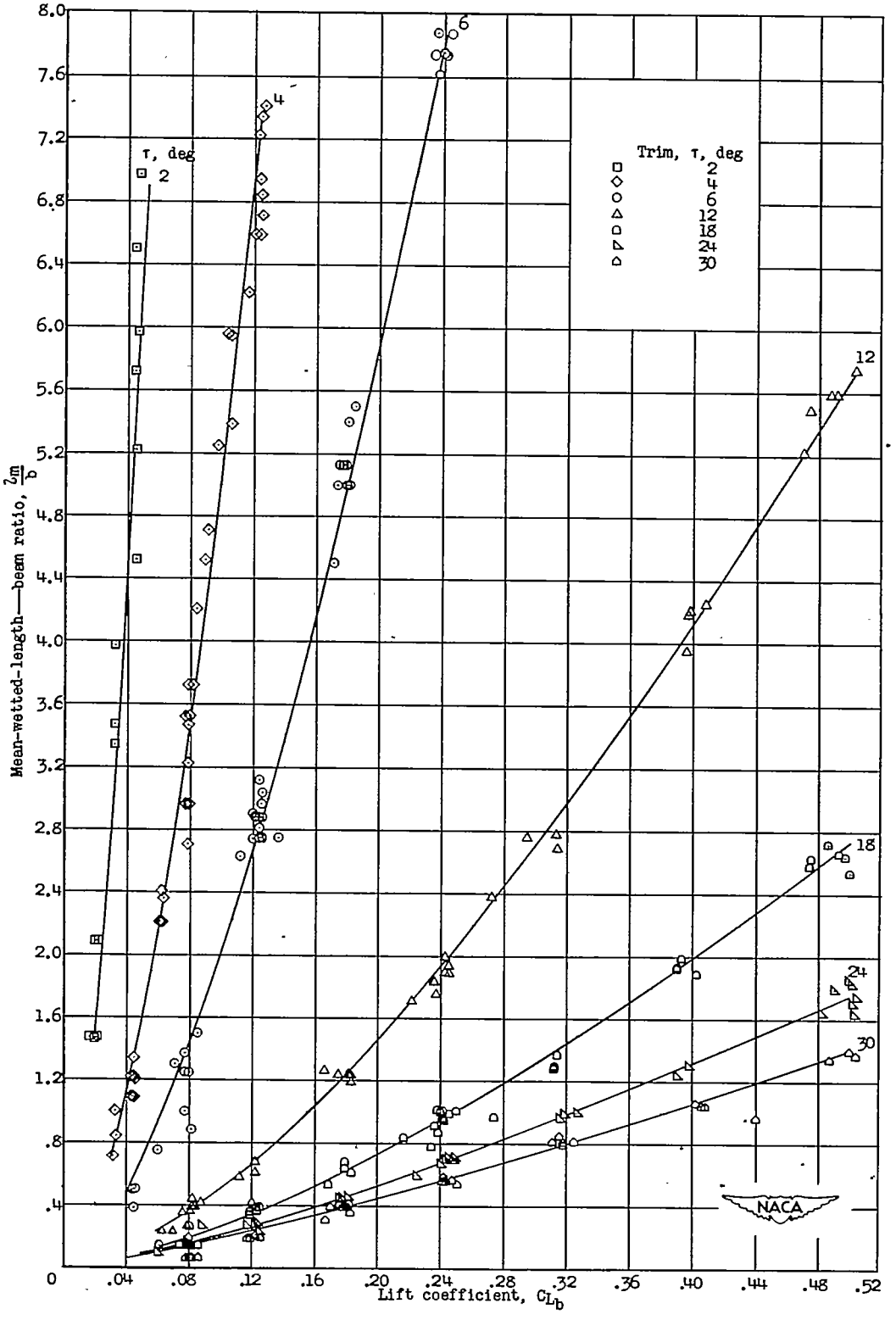

Figure 6.- Variation of mean-wetted-length—beam ratio with lift coefficient for surface having a 20° angle of dead rise.

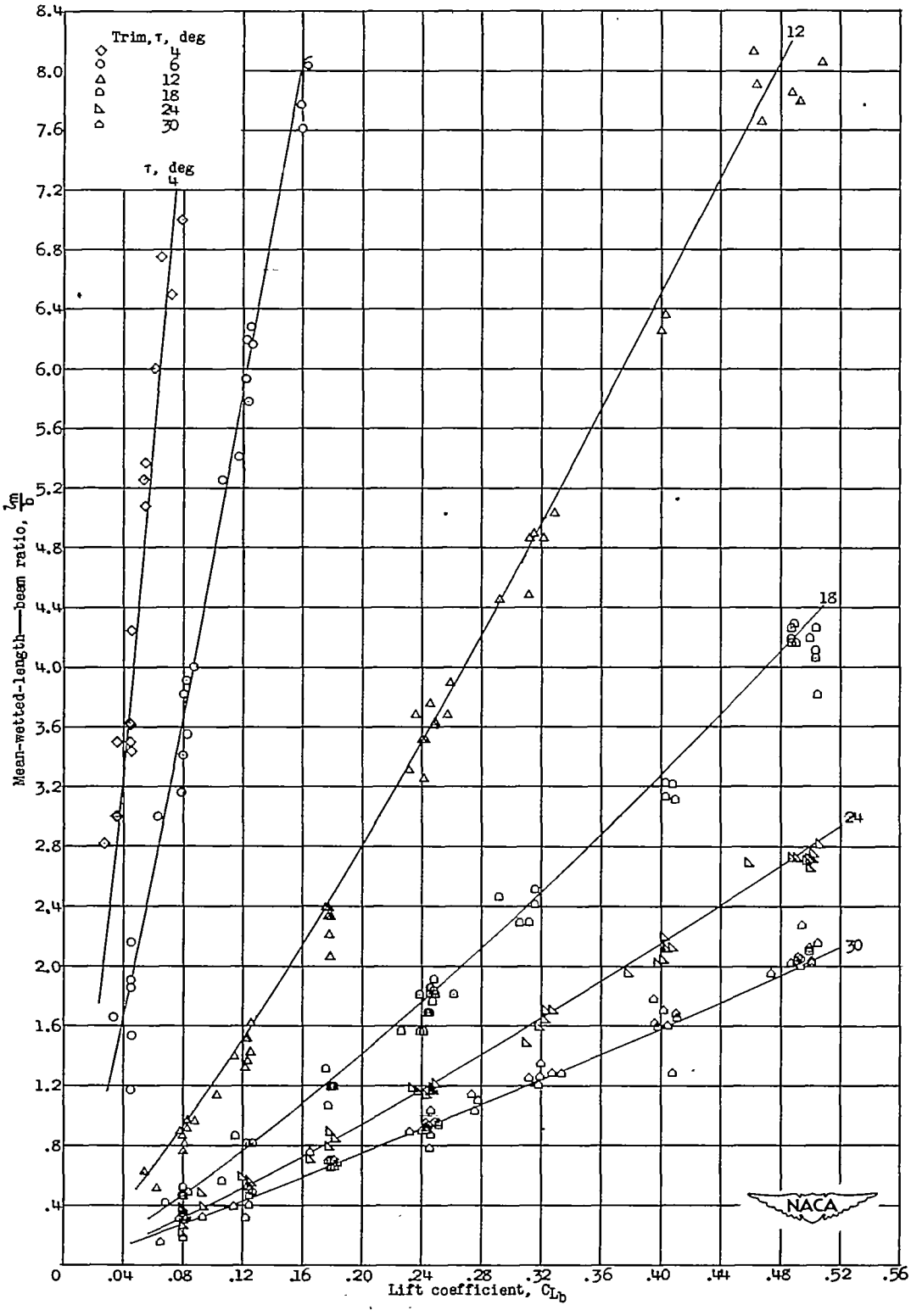

Figure 7.- Variation of mean-wetted-length—beam ratio with lift coefficient for surface having a 40° angle of dead rise.

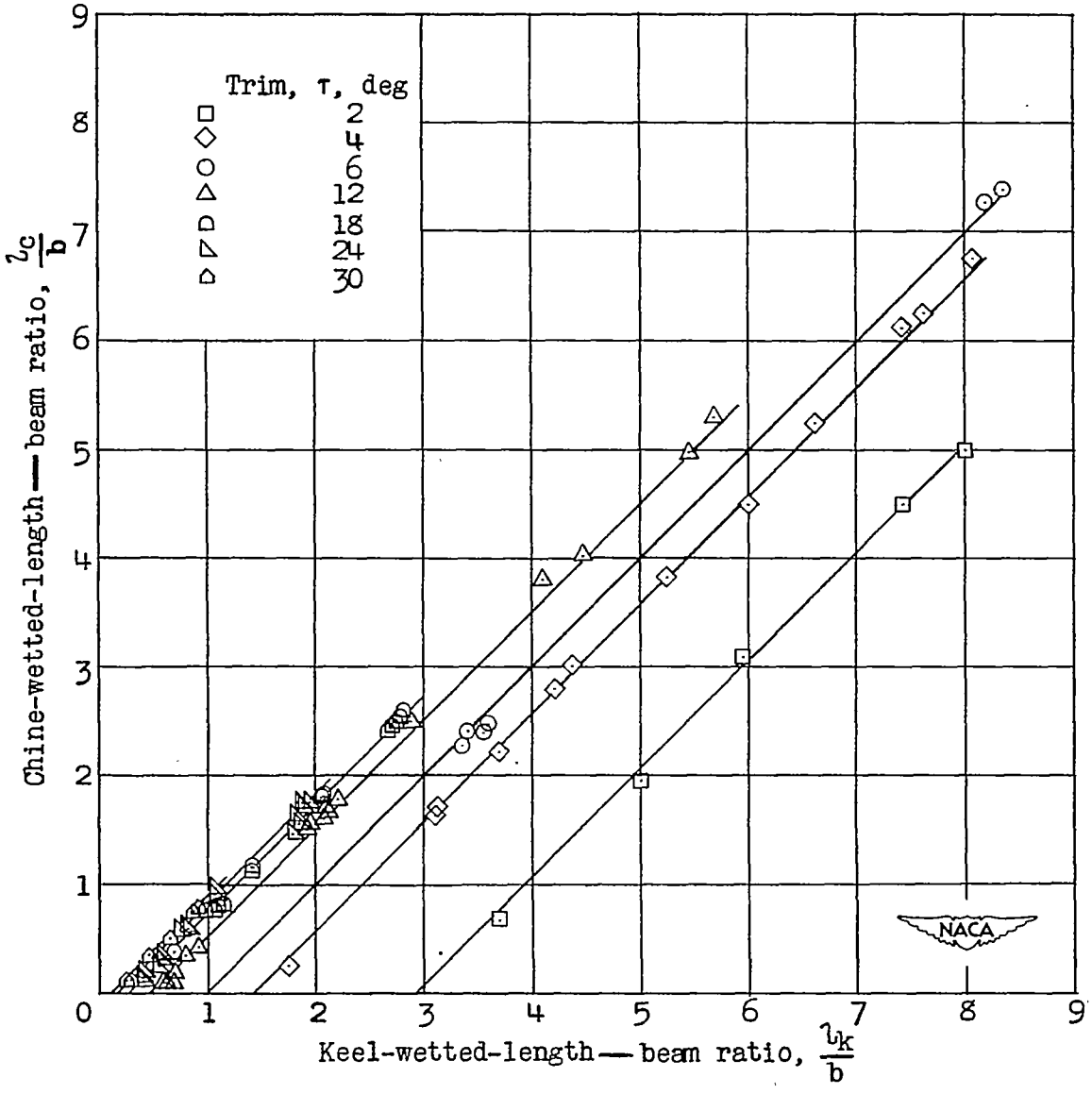

Figure 8.- Variation of chine-wetted-length—beam ratio with keel-wetted-length—beam ratio for surface having a 20° angle of dead rise.

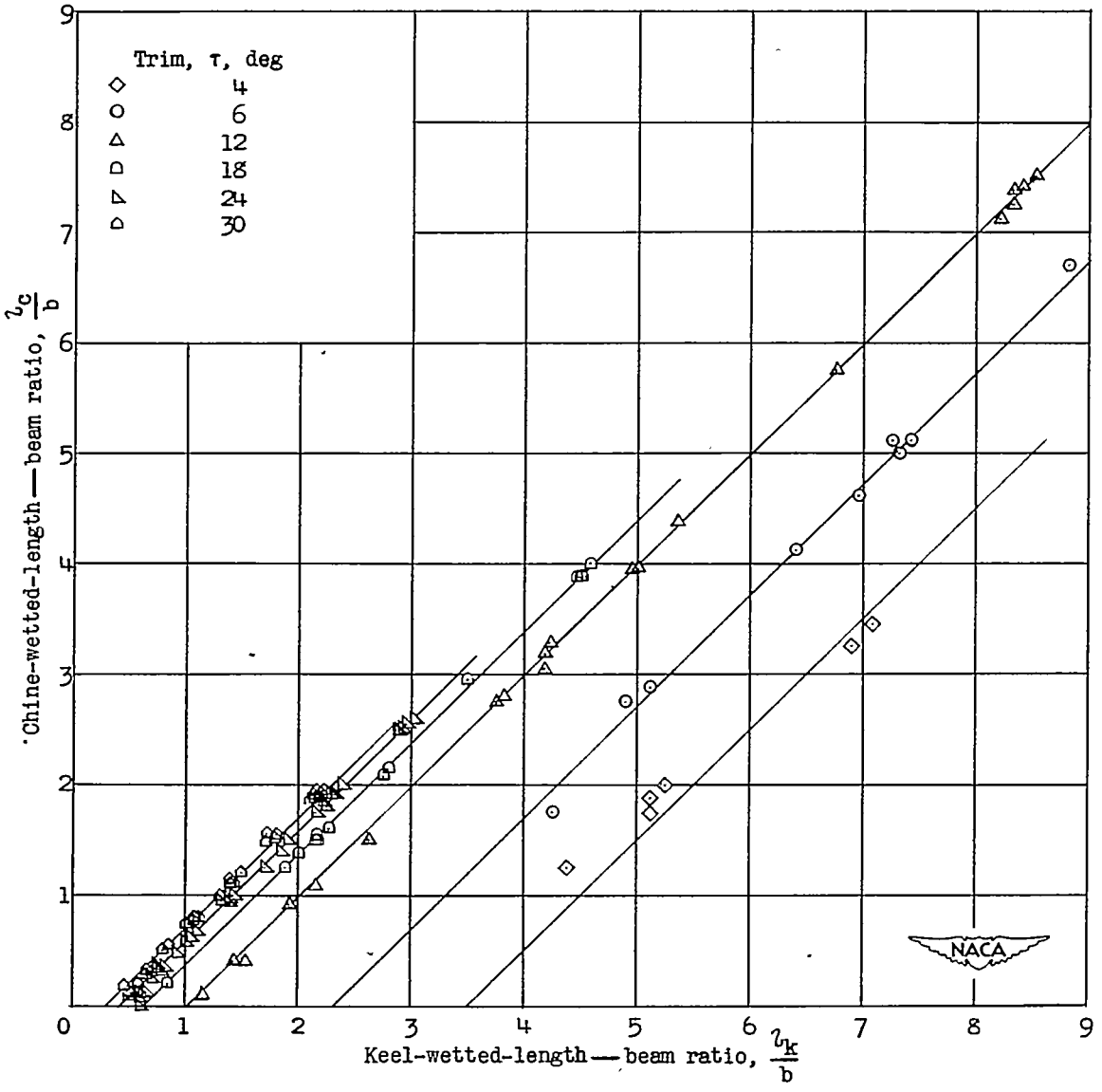

Figure 9.- Variation of chine-wetted-length—beam ratio with keel-wetted-length—beam ratio for surface having a 40° angle of dead rise.

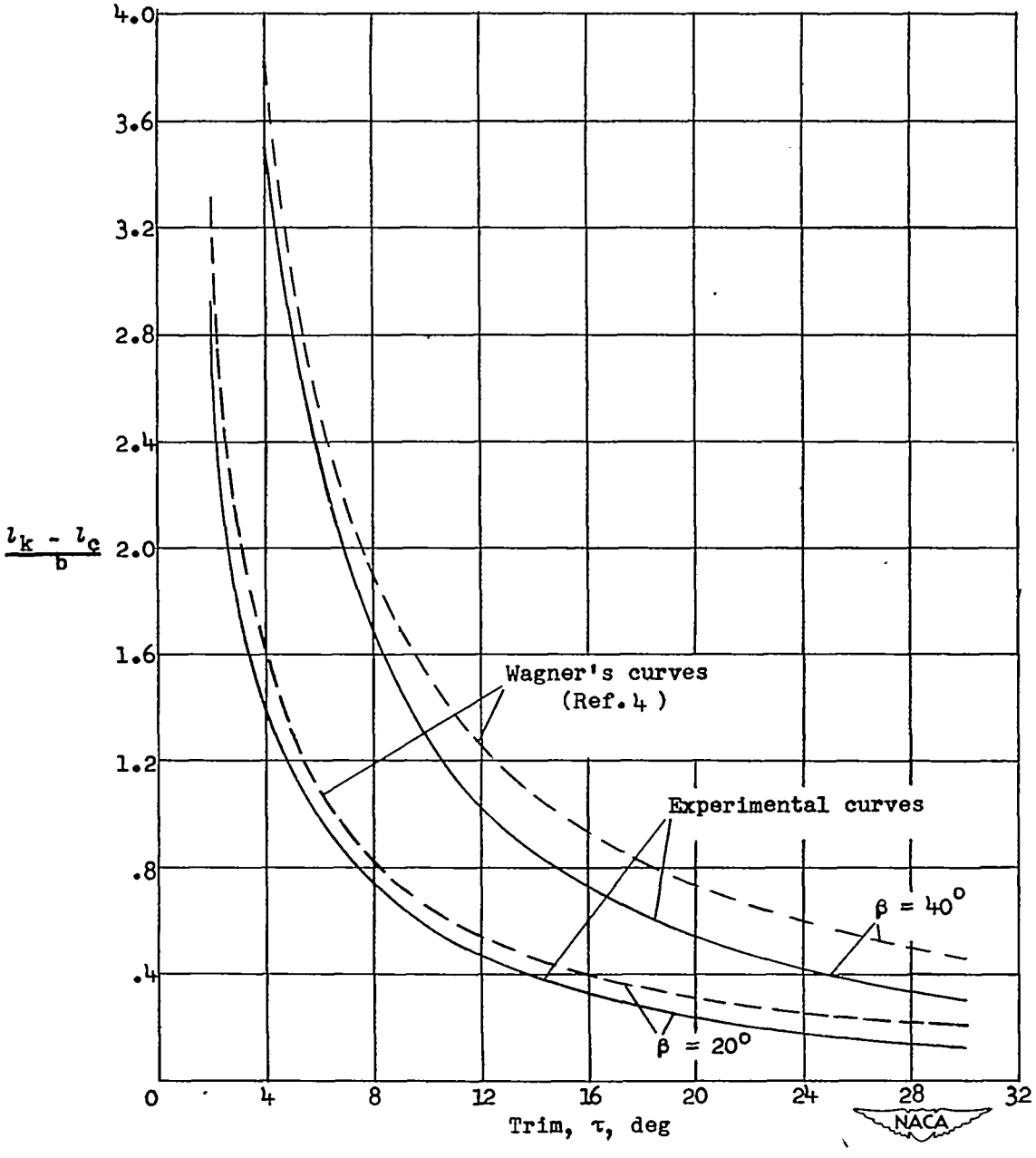

Figure 10.- Variation of $\frac{l_k - l_c}{b}$ with trim.

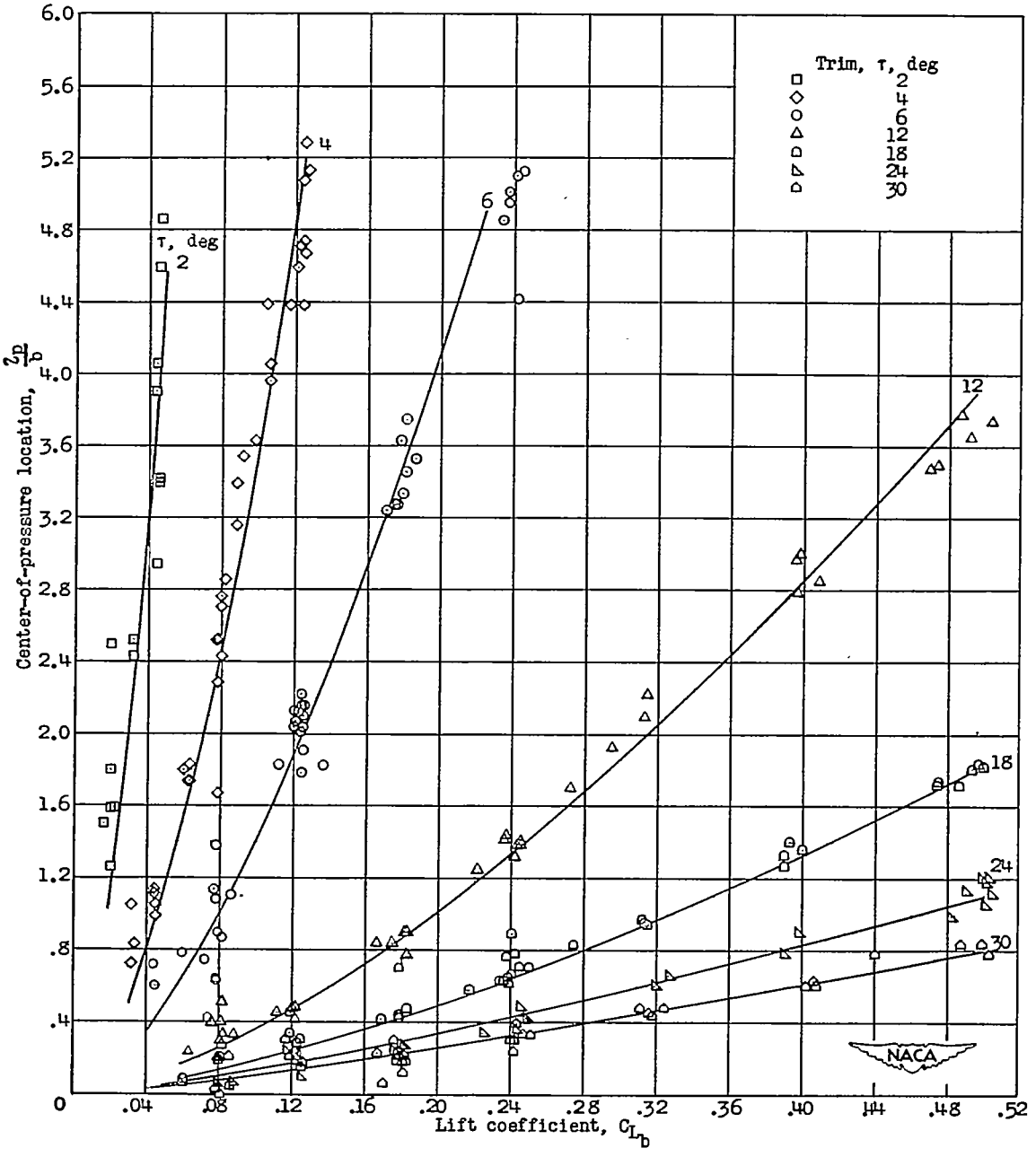

Figure 11.- Variation of center-of-pressure location with lift coefficient for surface having a 20° angle of dead rise.

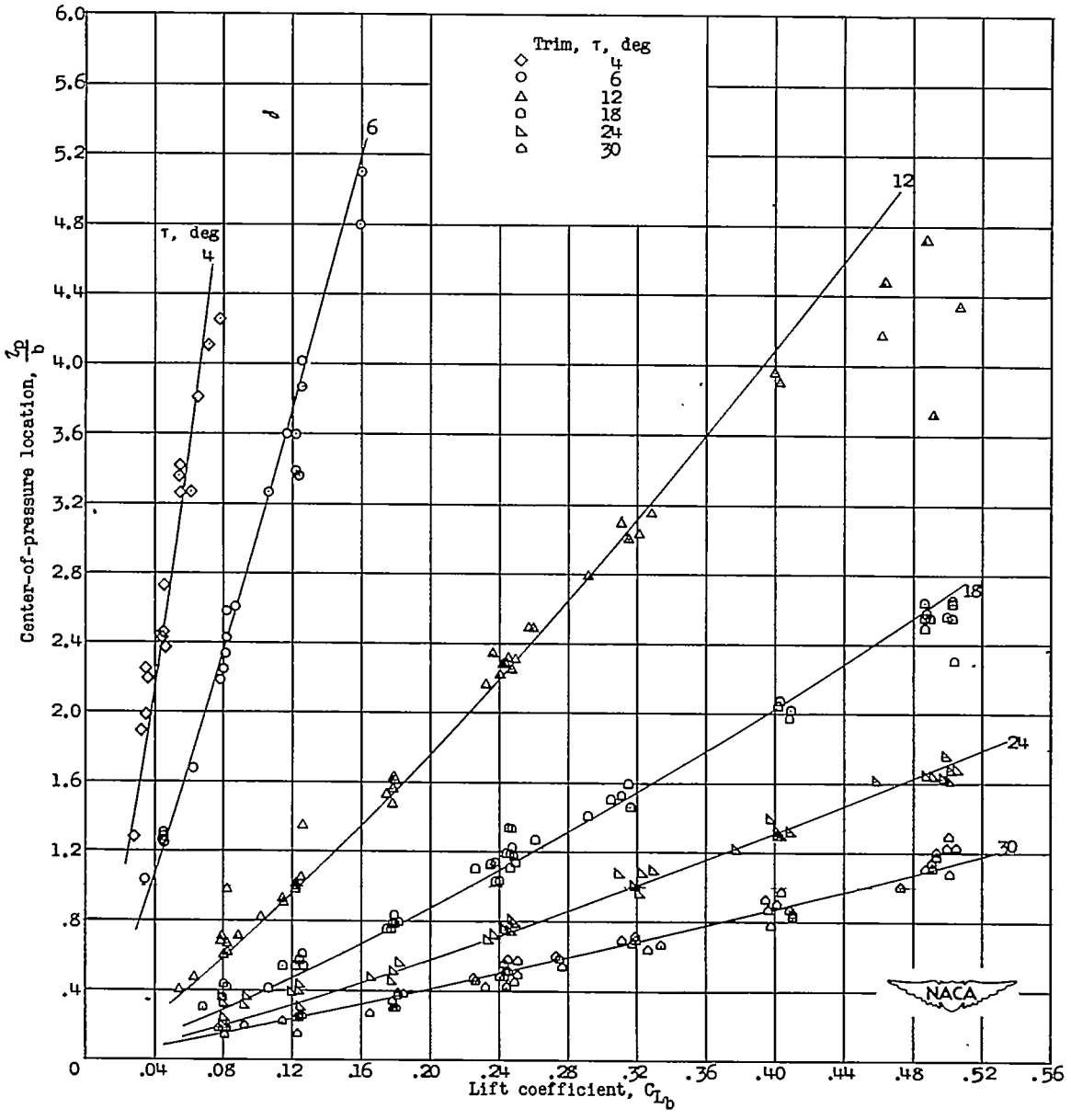

Figure 12.- Variation of center-of-pressure location with lift coefficient for surface having a 40° angle of dead rise.

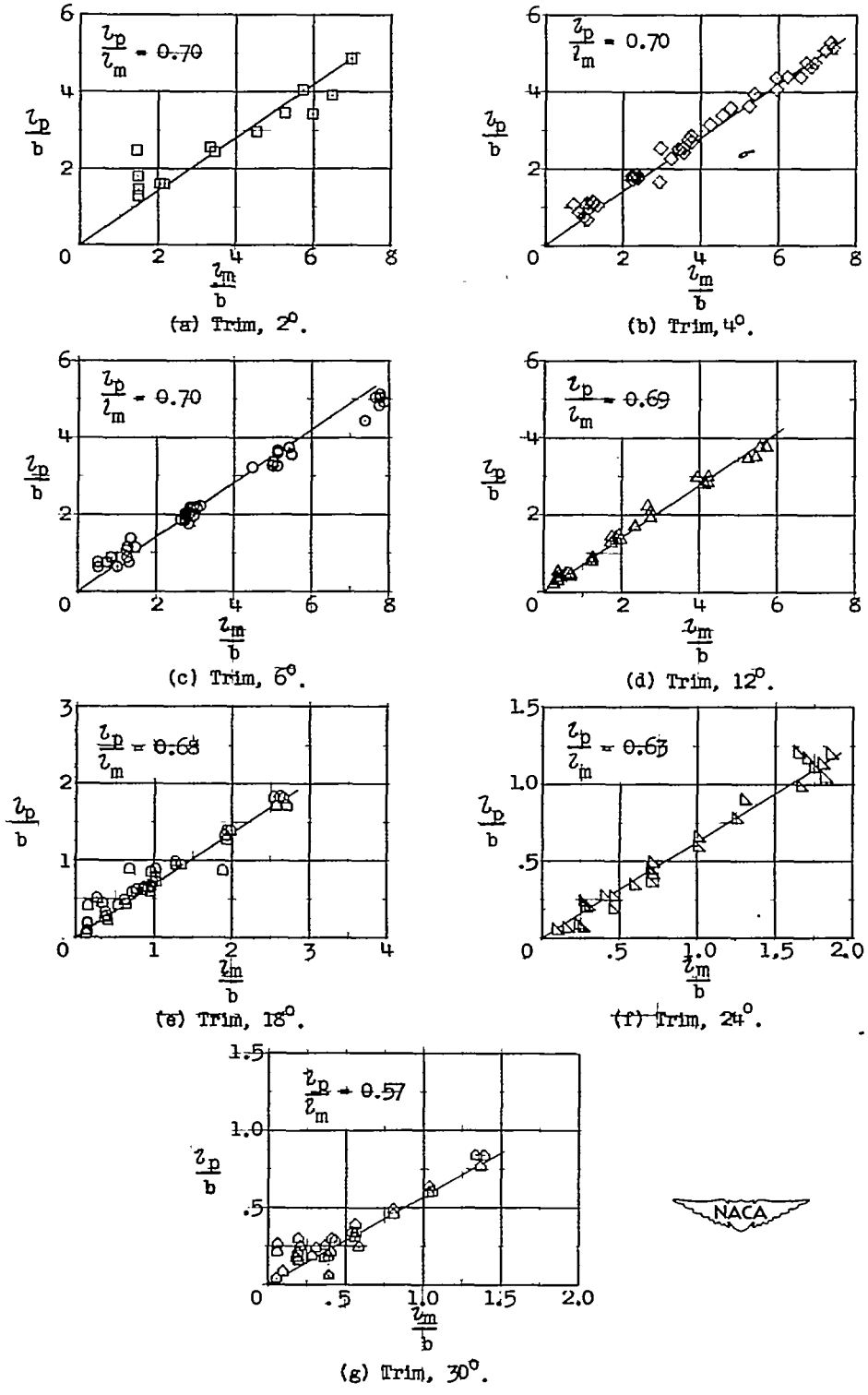

(a) Trim, 2°.

(b) Trim, 4°.

(c) Trim, 6°.

(d) Trim, 12°.

(e) Trim, 18°.

(f) Trim, 24°.

(g) Trim, 30°.

Figure 13.- Variation of l_p/b with l_m/b for surface having a 20° angle of dead rise.

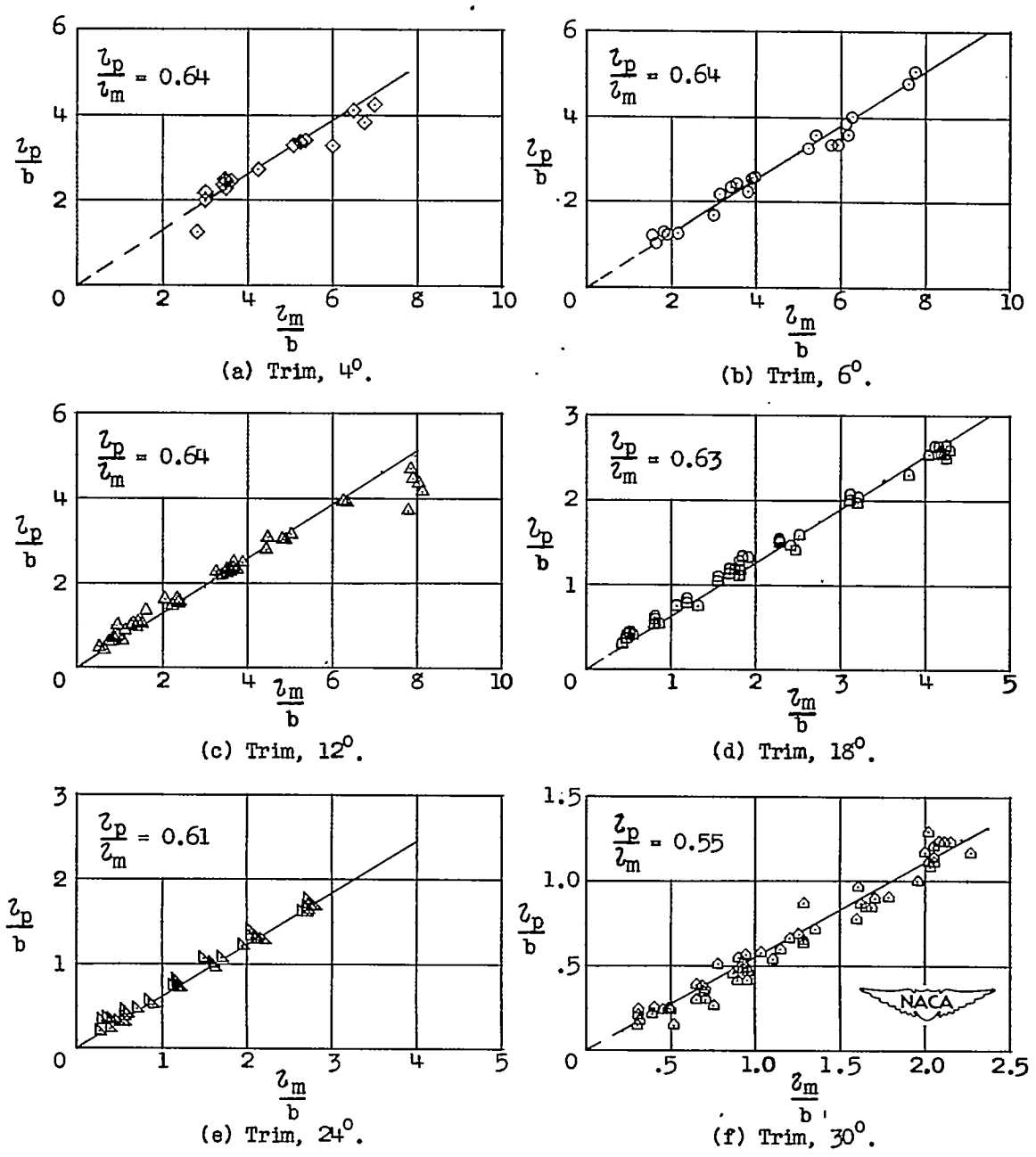

Figure 14.- Variation of l_p/b with l_m/b for surface having a 40° angle of dead rise.

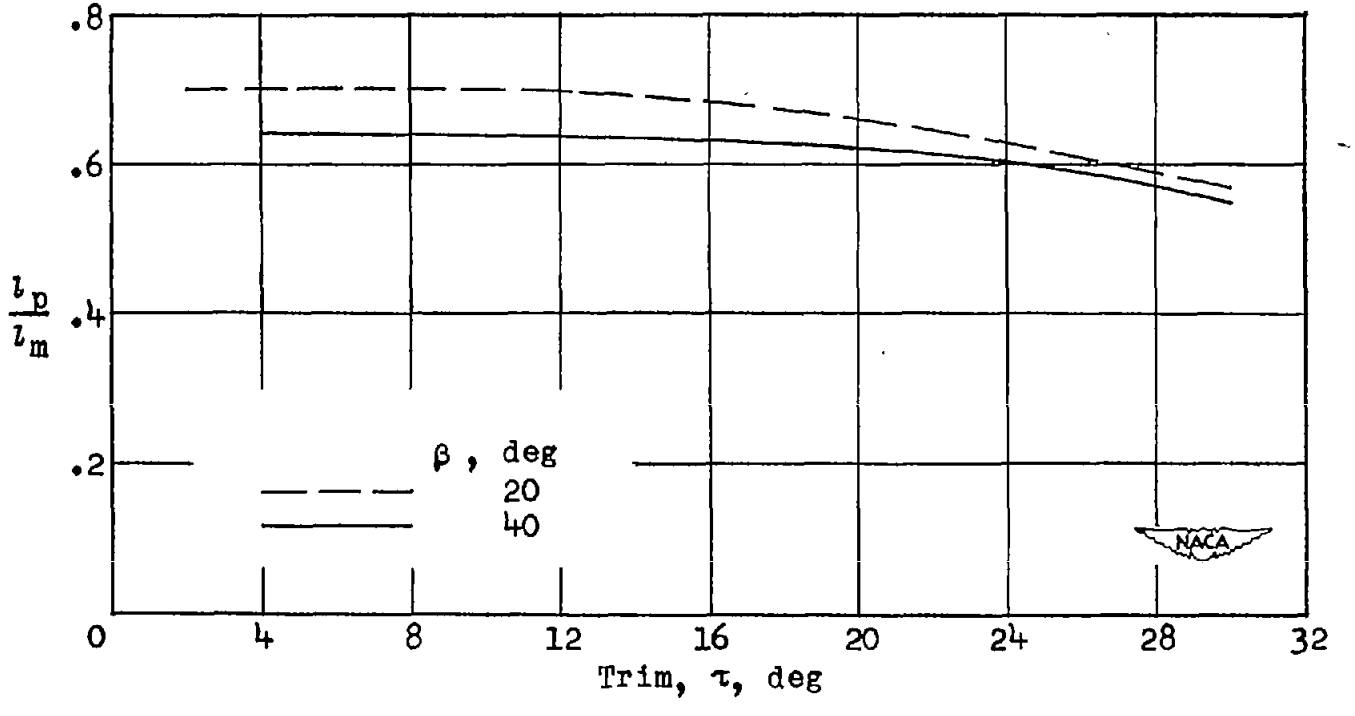

Figure 15.- Comparison of variation of l_p/l_m with trim for surfaces having 20° and 40° angles of dead rise.

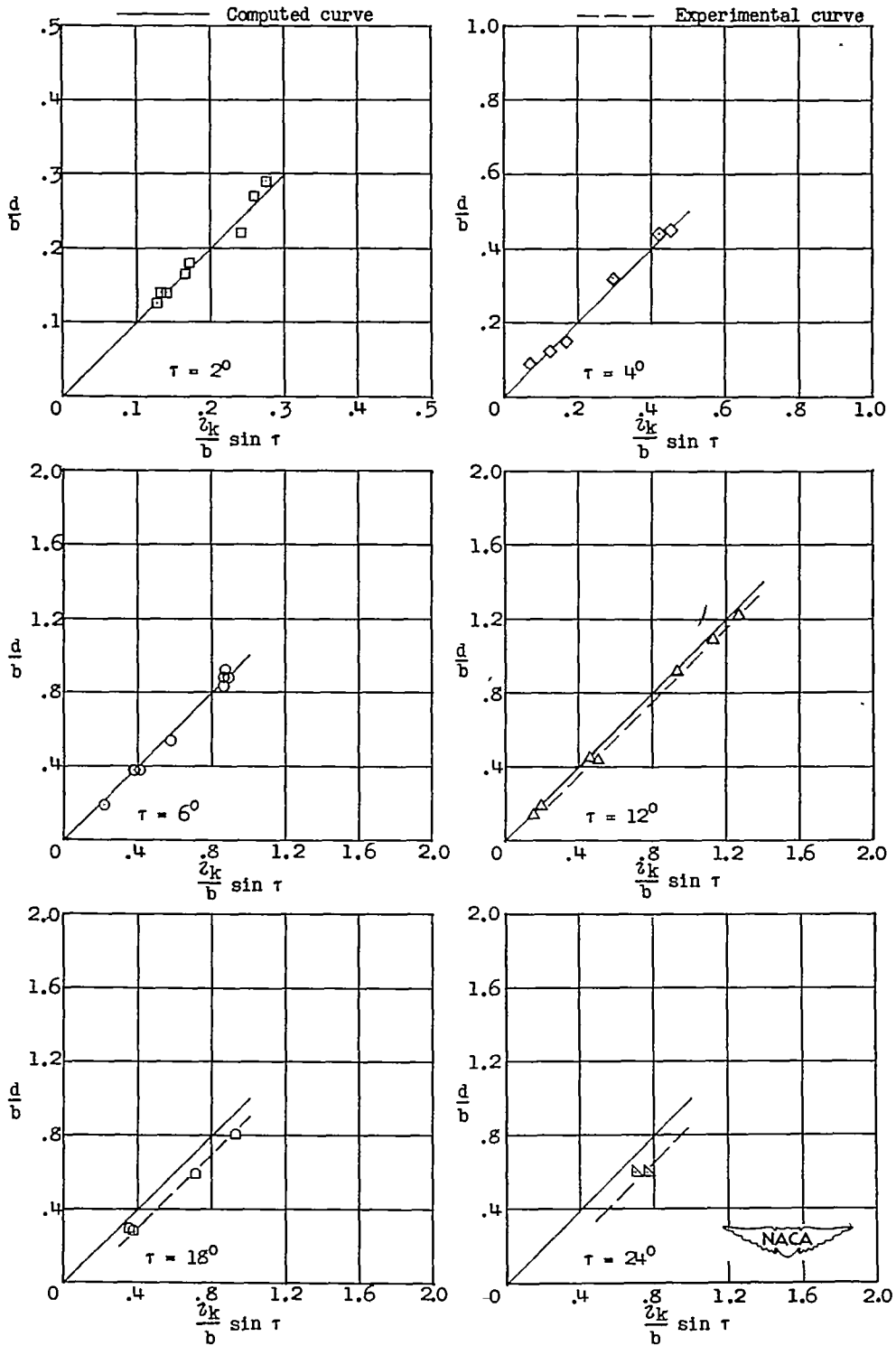

Figure 16.- Comparison of experimental draft data with computed draft data showing pile-up at the keel for surface having a 20° angle of dead rise.

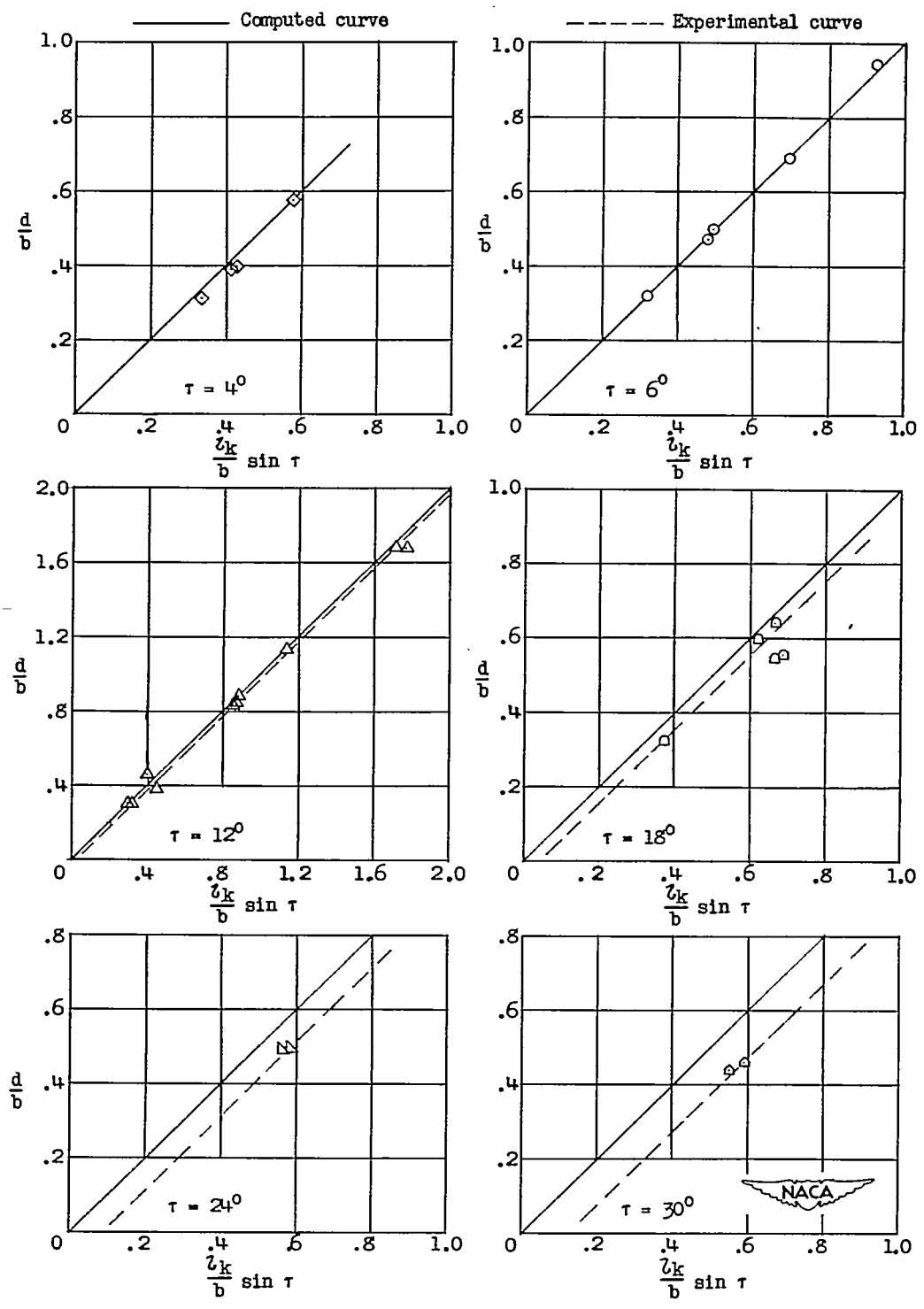

Figure 17.- Comparison of experimental draft data with computed draft data showing pile-up at the keel for surface having a 40° angle of dead rise.

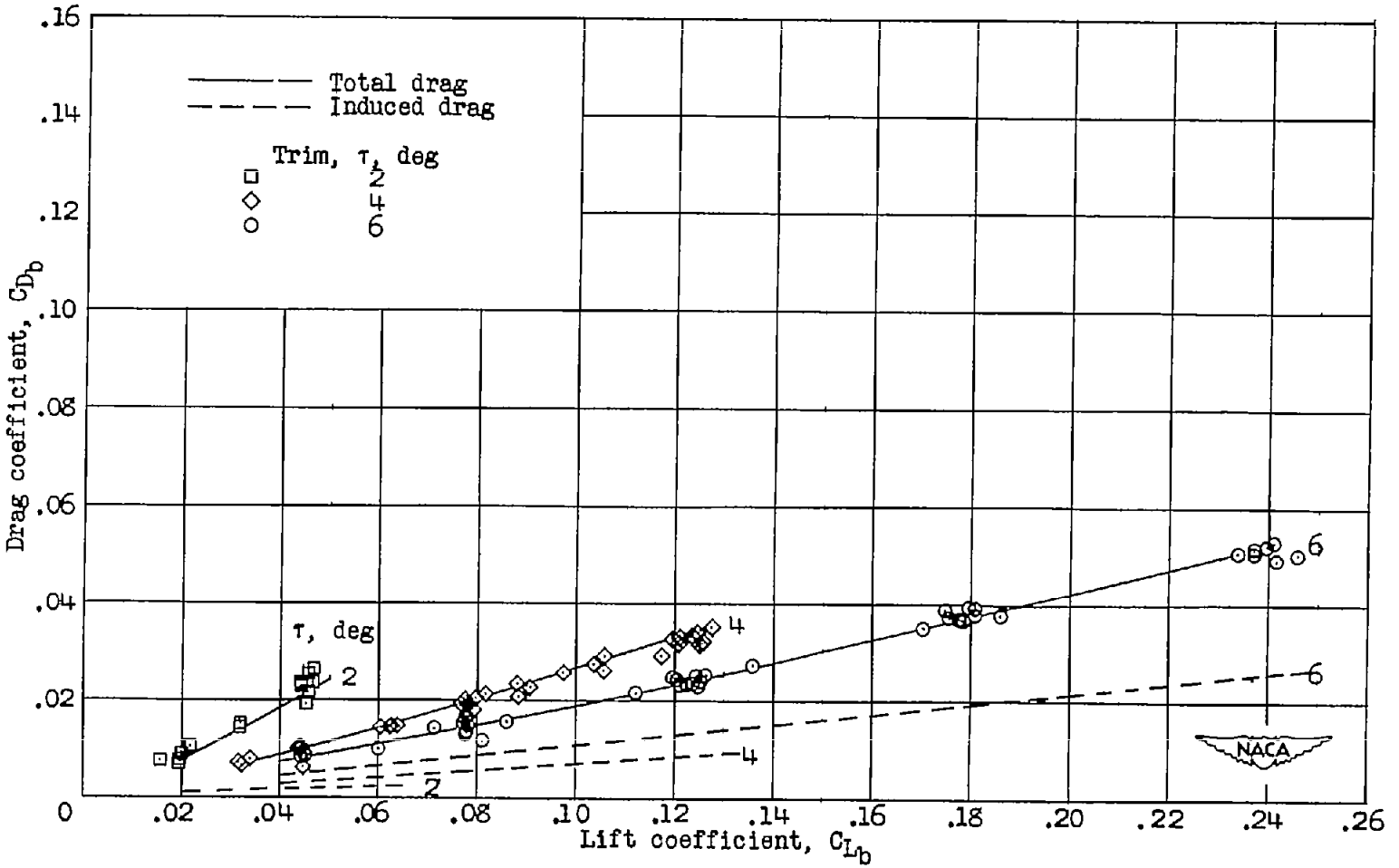

(a) Trim, 2°, 4°, and 6°.

Figure 18.- Variation of drag coefficient with lift coefficient for surface having a 20° angle of dead rise.

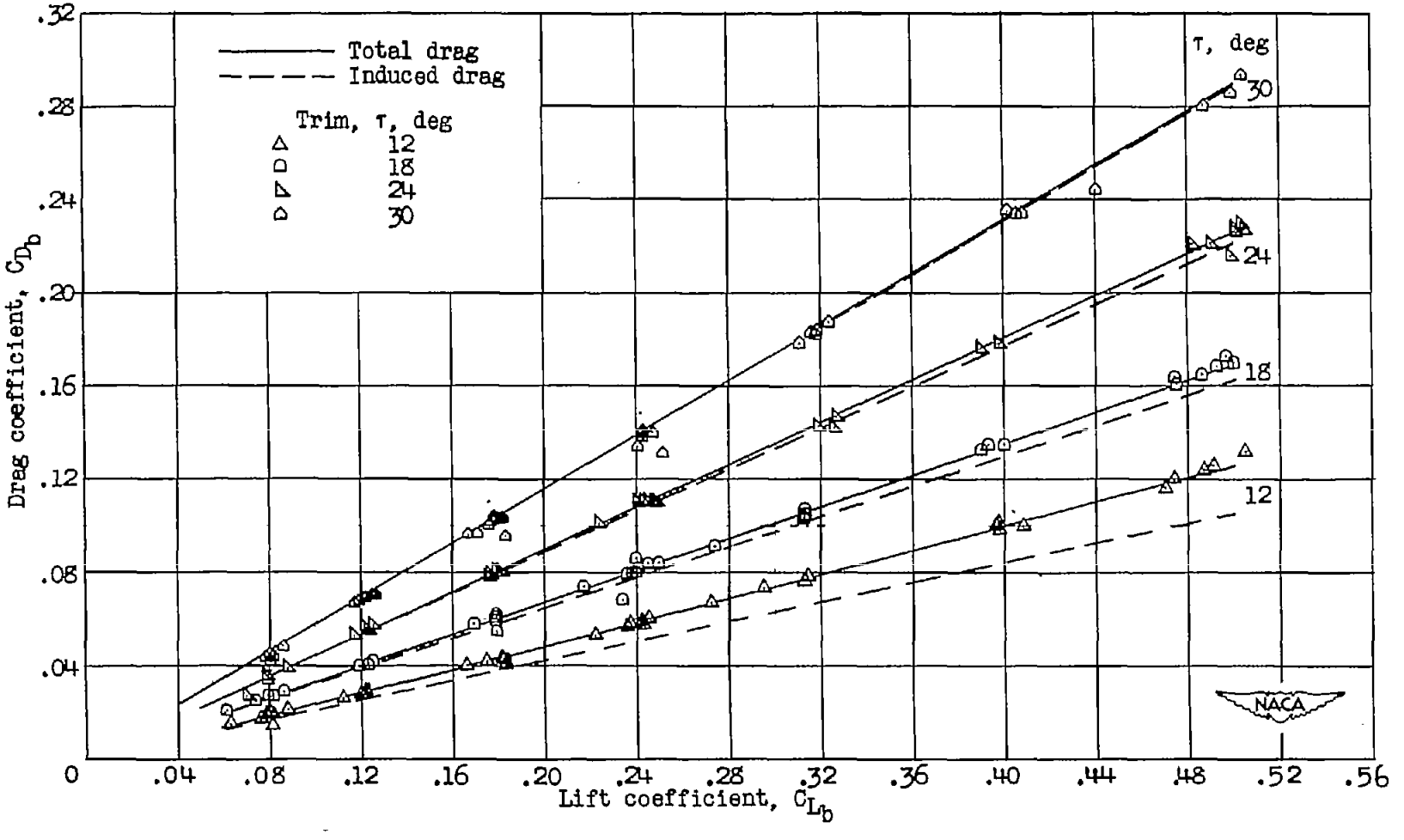

(b) Trim, 12°, 18°, 24°, and 30°.

Figure 18.- Concluded.

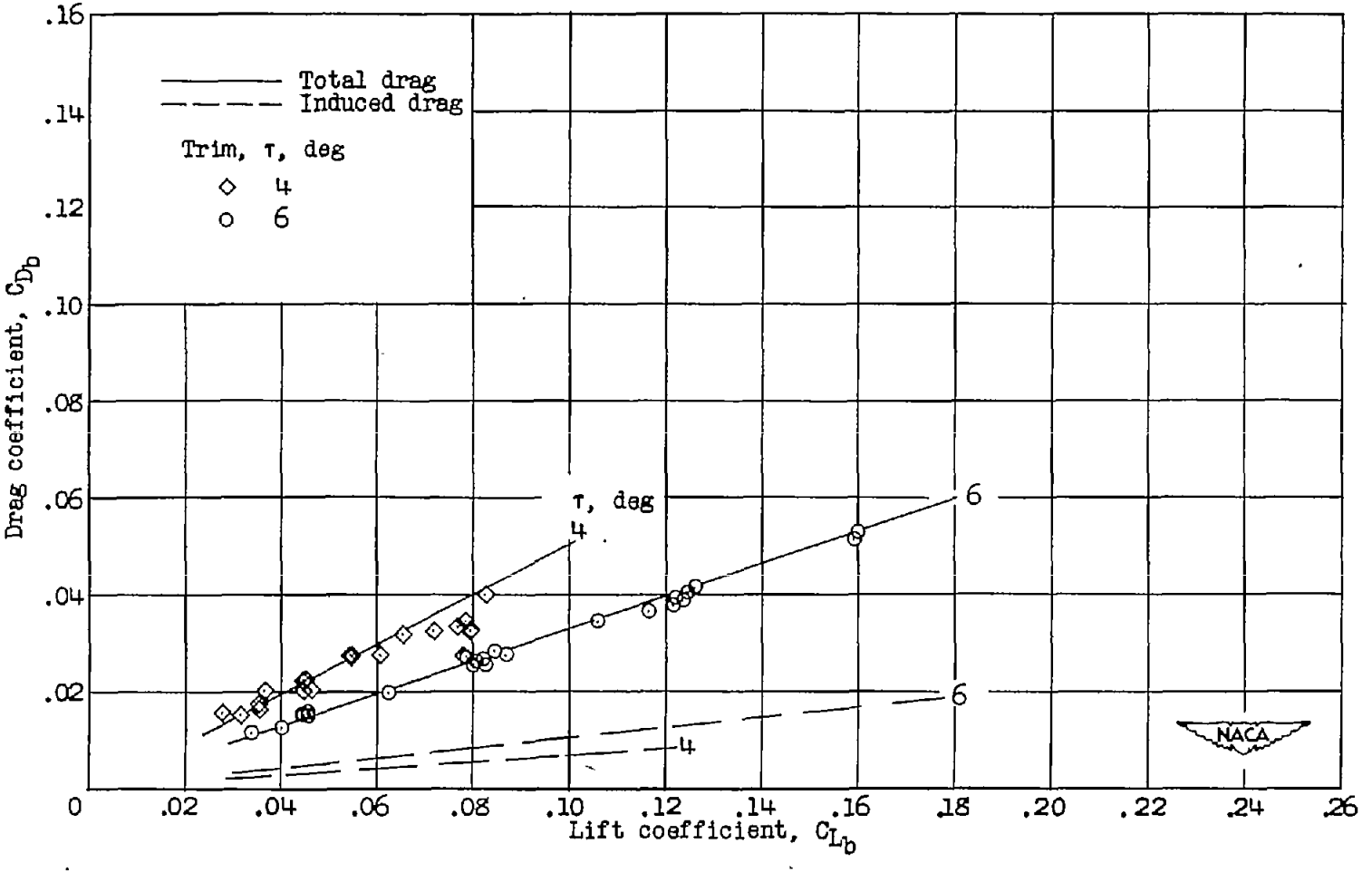

(a) Trim, 4° and 6°.

Figure 19.- Variation of drag coefficient with lift coefficient for surface having a 40° angle of dead rise.

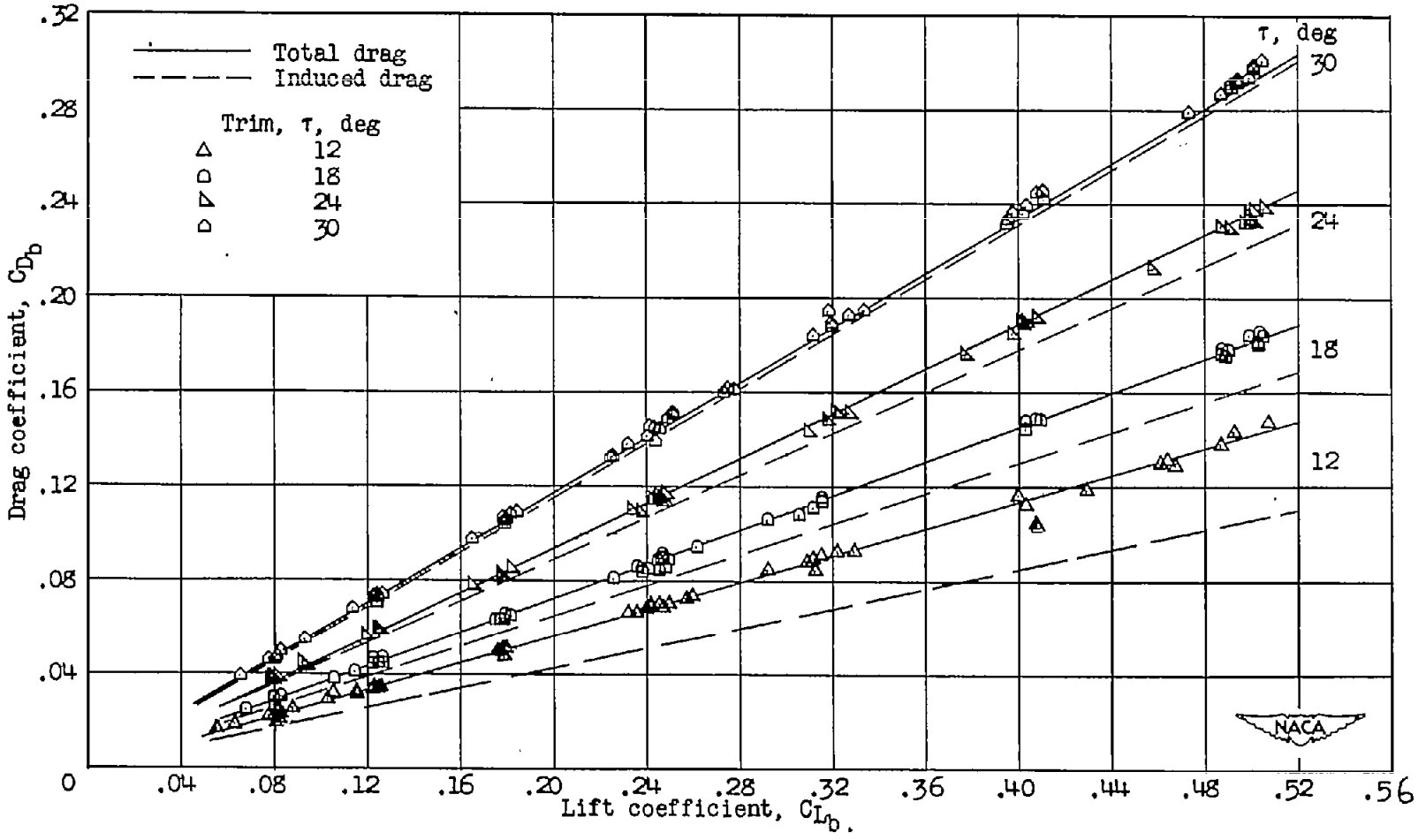

(b) Trim, 12°, 18°, 24°, and 30°.

Figure 19.- Concluded.

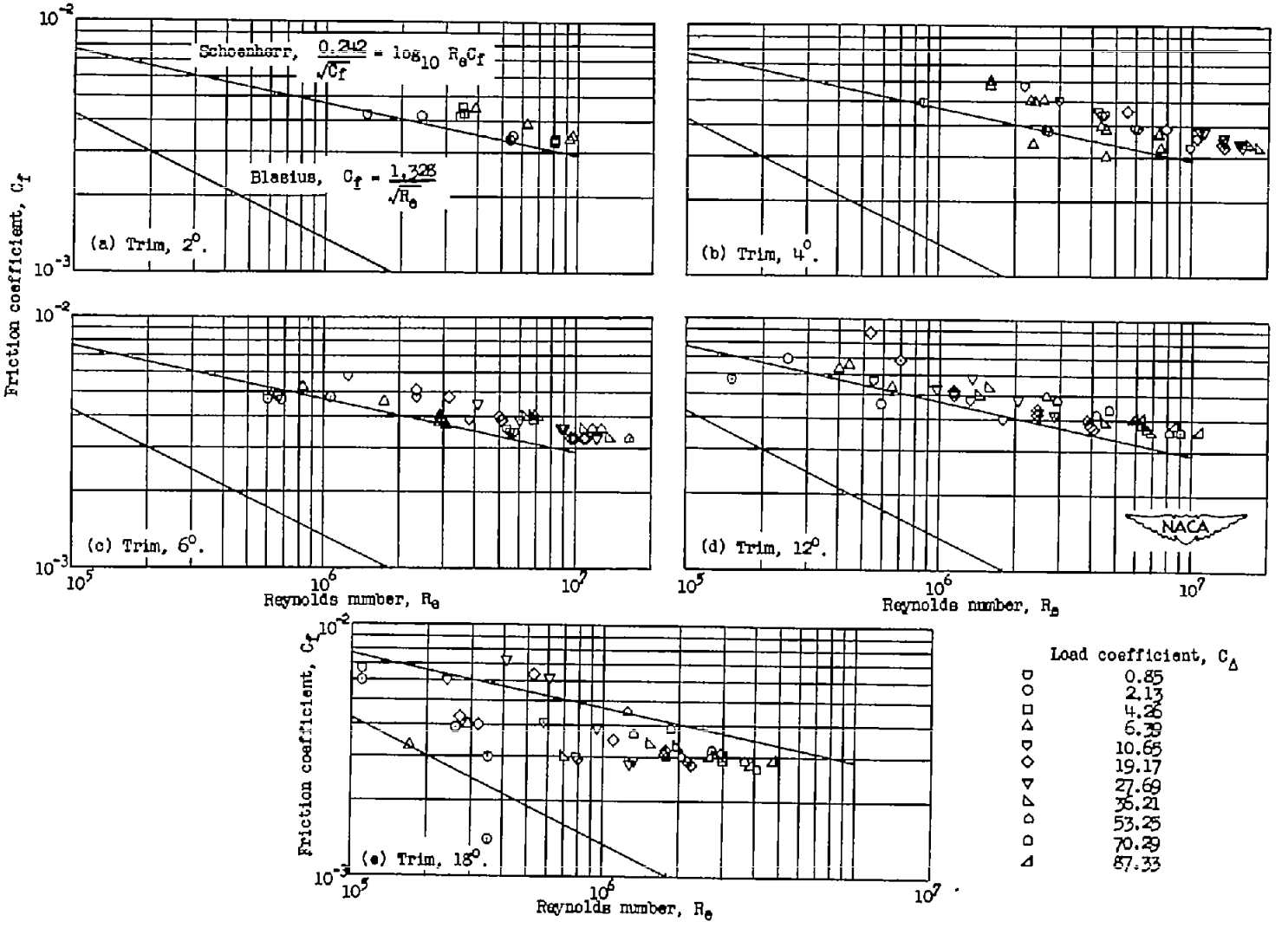

Figure 20.- Variation of friction coefficient with Reynolds number for surface having a 20° angle of dead rise.

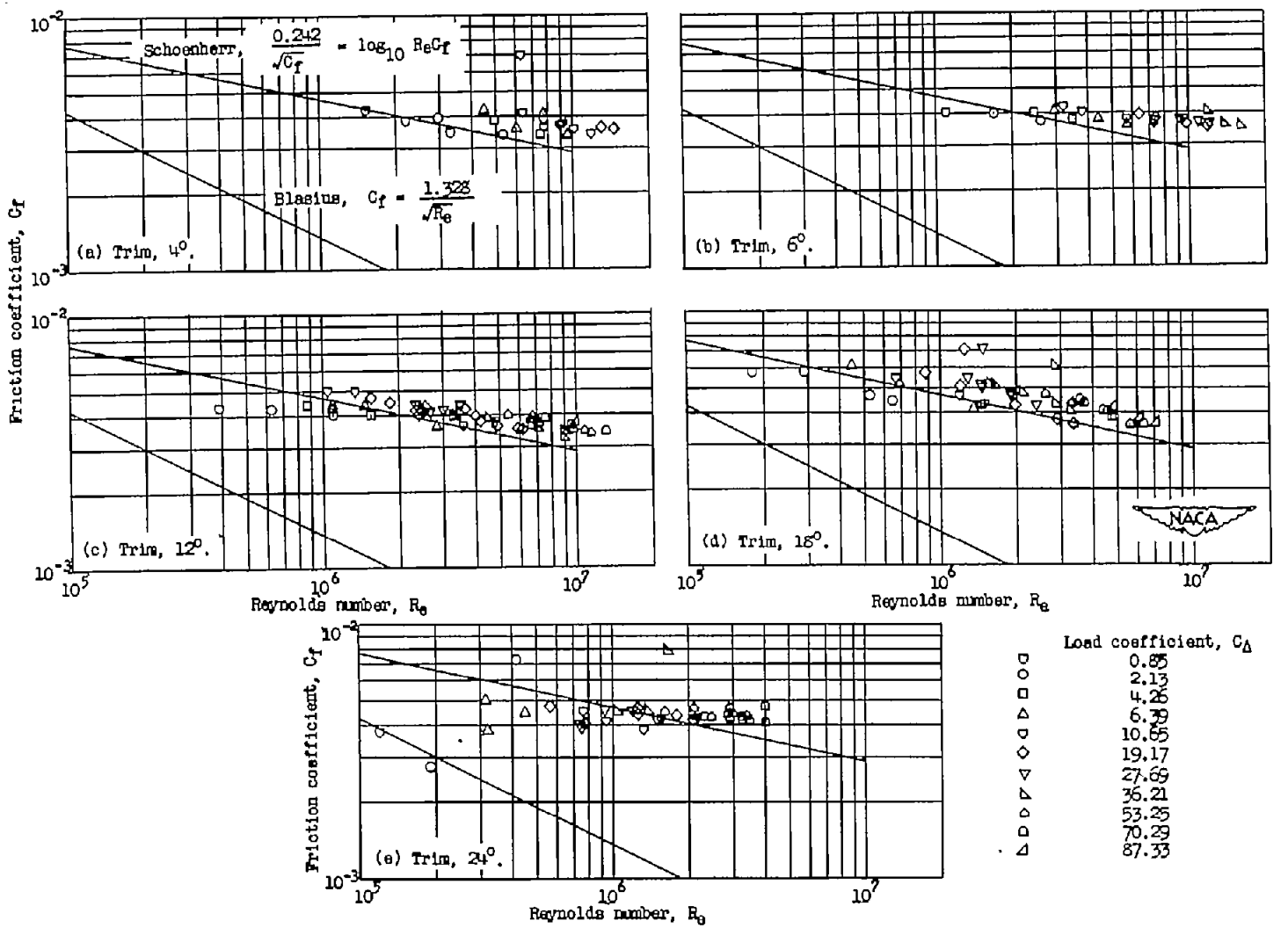

Figure 21.- Variation of friction coefficient with Reynolds number for surface having a 40° angle of dead rise.

NACA-Langley - 1-27-53 - 1000