9761
NACA TN 3477

TECH LIBRARY KAFB, NM
0066564

NATIONAL ADVISORY COMMITTEE FOR AERONAUTICS

TECHNICAL NOTE 3477

HYDRODYNAMIC PRESSURE DISTRIBUTIONS OBTAINED DURING A PLANING INVESTIGATION OF FIVE RELATED PRISMATIC SURFACES

By Walter J. Kapryan and George M. Boyd, Jr.

Langley Aeronautical Laboratory
Langley Field, Va.

Washington
September 1955

AFMDC
TECHNICAL LIBRARY
AFL 2811

ERRATA

NACA TN 3477

HYDRODYNAMIC PRESSURE DISTRIBUTIONS OBTAINED DURING
A PLANING INVESTIGATION OF FIVE
RELATED PRISMATIC SURFACES
By Walter J. Kapryan and George M. Boyd, Jr.

September 1955

The publication date "September 1955" should be added on the cover page directly below the word "Washington".

NACA - Langley Field, Va.

TECH LIBRARY KAFB, NM
0066564

NATIONAL ADVISORY COMMITTEE FOR AERONAUTICS

TECHNICAL NOTE 3477

HYDRODYNAMIC PRESSURE DISTRIBUTIONS OBTAINED DURING A PLANING INVESTIGATION OF FIVE RELATED PRISMATIC SURFACES

By Walter J. Kapryan and George M. Boyd, Jr.

SUMMARY

Pressure-distribution surveys have been made for five related prismatic surfaces, having angles of dead rise of 0°, 20° with and without horizontal chine flare, and 40° with and without horizontal chine flare, as part of general research on planing surfaces. Pressure distributions, which gave integrated lifts to well within 10 percent of the applied load, were obtained during pure planing and are presented for wetted-length—beam ratios ranging from approximately 0.5 to 5, trims from 4° to 30°, and beam loadings from approximately 2.8 to 38.

The results substantiate the use of the normal-load coefficient as the key parameter in predicting flat-plate center-line pressures. The results further show that flat-plate pressure distributions can be adequately predicted from existing theories. The reduction in pressure accompanying an increase in angle of dead rise is about as would be expected on the basis of previous force measurements. The addition of horizontal chine flare increases the pressure near the chines and extends the region of positive pressures further forward of the stagnation point in the vicinity of the chines. Existing theories are in poor agreement with the experimental pressure distributions obtained for surfaces having dead rise. The lift and centers of pressure are in good agreement with recent experimental and theoretical NACA research on planing surfaces.

INTRODUCTION

A pressure-distribution survey was undertaken by the National Advisory Committee for Aeronautics as part of a general program of research on the planing characteristics of a series of related prismatic surfaces. The principal objective of this program was to extend the range of experimental data on planing surfaces to cover the high trim and loading conditions of importance in the design of high-speed water-based aircraft. The details of this program are described in reference 1 and the results of the initial phase of the investigation are presented

in references 1 to 5. During the initial phase, force measurements were obtained for seven models incorporating angles of dead rise of 0°, 20°, and 40°, and 20° and 40° with horizontal chine flare and with vertical chine strips.

The primary purpose of this paper is to present pressure distributions for the aforementioned models (excepting the two with vertical chine strips) at conditions representative of the range of trims, lift coefficients, and wetted lengths of references 1 to 5. Wetted lengths ranged from approximately 0.5 to 5 beams, trims ranged from 4° to 30°, and beam loadings ranged from approximately 2.8 to 38. Inasmuch as the force tests of references 1 to 5 established the primary dependence of the planing characteristics on trim and lift coefficient, it was possible to expedite the present tests by limiting the number of speeds at which pressure measurements were made. For the most part, data were obtained at a speed of 40 feet per second with a few supplementary runs to determine the effect, if any, of change in speed on these distributions. The experimental pressures and force data obtained from these tests are presented in tables I to V. Typical distributions are presented and compared with those calculated on the basis of existing longitudinal and transverse pressure-distribution theories.

SYMBOLS

b beam of planing surface, 0.333 ft

C_{L_b} lift coefficient based on square of beam, $\dfrac{\Delta}{\frac{\rho}{2} V^2 b^2} = 2 \dfrac{C_\Delta}{C_V^2}$

C_{L_S} lift coefficient based on principal wetted area, $\dfrac{\Delta}{\frac{\rho}{2} V^2 S} = \dfrac{C_{L_b}}{l_m/b}$

$\left(C_{N_S}\right)_c$ center-line normal-load coefficient, $\dfrac{C_{L_S}}{0.95 \cos \tau}$

C_V speed coefficient or Froude number, $V/\sqrt{gb}$

C_Δ load coefficient or beam loading, Δ/wb^3

d	draft of orifice with respect to undisturbed water level, ft
g	acceleration due to gravity, 32.2 ft/sec^2
l	length of planing surface, ft
l_c	chine wetted length, ft
l_{c_s}	length along chine to stagnation point, ft
l_k	keel wetted length, ft
l_{k_s}	length along keel to stagnation point, ft
l_m	mean wetted length, ft
l_p	center-of-pressure location (measured along keel forward of trailing edge), ft
p	measured dynamic pressure at orifice (does not include static displacement), lb/sq ft
p'	total pressure at orifice, lb/sq ft
q	dynamic pressure based on towing-carriage velocity, $\frac{\rho}{2} V^2$, lb/sq ft
p/q	nondimensional pressure ratio
S	principal wetted area (bounded by trailing edge, chines, and heavy spray line) projected on plane parallel to keel, $l_m b$, sq ft
V	horizontal velocity, ft/sec
w	density of tank water, 63.4 lb/cu ft
w_{Hg}	density of mercury, lb/cu ft
w'	density of fresh water, 62.4 lb/cu ft
y	displacement of mercury column with respect to free surface of mercury in reservoir, ft
z	distance from undisturbed water level to mercury reference level, ft

β angle of dead rise, deg

Δ vertical load, lb

ρ mass density of tank water, 1.969 slugs/cu ft

τ trim, deg

λ distance forward of trailing edge of model, beams

λ/λ_p ratio of distance forward of trailing edge with respect to distance from trailing edge to stagnation point

Subscripts:

$(\ )_f$ denotes data obtained during force tests

$(\ )_p$ denotes data obtained during pressure tests

DESCRIPTION OF MODELS

The cross sections of the models and pertinent dimensions are presented in figure 1. The models, which were constructed of plexiglas, were rectangular in plan form and had a length of 36 inches and a beam of 4 inches. Models 303, 301, and 302 were simple prismatic surfaces having angles of dead rise of 0°, 20°, and 40°, respectively. Models 301-A and 302-A had horizontally flared chines with basic angles of dead rise of 20° and 40°, respectively. Sharp chines and keels were maintained throughout these tests. Each model had a total of 100 orifices, 1/32 of an inch in diameter, drilled perpendicular to the bottom surface. Special care was taken to insure clean and sharp orifice edges, since preparatory experimentation by the authors and the results of the investigation reported in reference 6 established the need for such orifices for accurate pressure measurements. The general arrangement of these orifices is shown in figures 1 and 2. The orifices were arranged along three major buttocks, one of which was 0.1 inch outboard of the model center line, another was 0.1 inch inboard of the chine, while the third was located midway between model center line and chine. A few auxiliary orifices were placed in buttocks midway between the major buttocks. In order to define the pressures as near the trailing edge as possible, five orifices were located in the aforementioned buttocks 0.1 inch forward of the trailing edge. All orifices can be located by means of the scale at the bottom of figure 2.

APPARATUS AND PROCEDURES

The investigation was conducted in Langley tank no. 1. The apparatus for towing the model and the instrumentation for the force measurements are described in reference 7. The models were towed at fixed predetermined trims, loads, and speeds, and were free to rise. The wetted areas were determined from underwater photographs in the manner described in reference 1 and from visual readings of the wetted length where photographs were not available. The wetted lengths ranged from approximately 0.5 to 5 beams, trims ranged from 4° to 30°, and beam loadings ranged from approximately 2.8 to 38. Most of the data were obtained at a speed of 40 feet per second. A few runs were made at various other speeds ranging from approximately 22 to 50 feet per second to determine the effect, if any, of change in speed on the distributions.

The pressures were measured with a bank of mercury-water manometers connected to 100 orifices on each model and were photographically recorded. A diagram of the manometer system used to measure the pressures is shown in figure 3. In this particular system the lines leading from the orifices to the mercury columns at the manometer board were completely filled with water so that the pressure at the orifice was transmitted to the mercury without any compressibility errors and with minimum time lag. The dynamic pressure at the orifice is defined by the following equation:

$$p = zw' + y(w_{Hg} - w')$$

where the total pressure is defined by

$$p' = p + dw$$

In view of the range of trims and wetted lengths under investigation, a wide range of pressures defining the distributions was anticipated. In order, therefore, to obtain the maximum manometer deflections for the particular condition being tested, the board was provided with a means for varying its angle of inclination. For the present tests the manometer-board angle was varied from approximately 15° to 42° from the horizontal. The manometer deflections were recorded photographically after they became stabilized on the board. A photograph of a typical distribution is presented as figure 4.

The aerodynamic tares were held to a minimum by the windshielding arrangement used for the investigations described in references 1 to 5.

PRECISION

The quantities measured are generally believed to be accurate within the following limits:

Load, lb	±0.30
Wetted length, in.	±0.25
Trim, deg	±0.10
Speed, ft/sec	±0.20

The pressure readings are believed to be accurate to within ±0.05 inch along the manometer board. Since, however, the manometer board angle was varied throughout the tests, the accuracy of the pressure reading in pounds per square inch was a function of that angle and varied from ±0.01 pound per square inch for a manometer board angle of 15° to ±0.018 pound per square inch for a manometer board angle of 42°. The resulting pressure distributions gave integrated lifts that in almost every case were well within 10 percent of the applied load.

RESULTS AND DISCUSSION

The data for all models are presented in tables I to V. The load, speed, wetted lengths, and center-of-pressure location are expressed as conventional hydrodynamic coefficients. The lift coefficients are expressed both in terms of the square of the beam and in terms of the principal wetted area. The pressures are presented in the form of the ratio p/q, where q is the dynamic pressure based on the speed of the towing carriage. The center-of-pressure values were obtained by integrating the pressure-distribution curves and therefore do not include the effect of friction. This effect for the conditions tested, however, is generally slight so that the values obtained should be in reasonable agreement with those determined from force measurements.

A few general comparisons are made of the experimental pressure distributions with those calculated from existing theories. A method based on potential flow is presented in reference 8 for computing transverse distributions when the chines are immersed; in reference 9, an expanding lamina and spray-root analysis are the basis for predicting transverse distributions when the chines are not immersed. Smiley, in reference 10, presents a semiempirical method, based on the center-line normal-load coefficient, for applying Wagner's two-dimensional flat-plate theory to define longitudinal center-line distributions. The center-line normal-load coefficient is discussed in some detail in reference 10, and the use of this coefficient is suggested as the basis for making quantitative comparisons between experimental and theoretical pressure distributions.

Pressure Distributions on the Flat Plate

Representative pressure distributions for the flat plate are presented in figures 5 to 7. The distributions obtained at a trim of 6° are shown in figure 5 for the wetted-length—beam ratios of 1.07, 2.87, and 5.07. In each instance the experimental pressures measured along the buttock 0.1 inch outboard of the model center line are presented in the upper half of the figure as center-line pressures (they differ from the faired center-line pressures by a negligible amount) and are compared with curves calculated by the procedure proposed in reference 10. The agreement between experiment and theory is seen to be good.

The lower halves of figures 5(a), 5(b), and 5(c) present the experimental pressures along various transverse sections, together with calculated curves based on the chine-immersed transverse theory of reference 8. Equations (41) of reference 8 permit the calculation of p/p_{max}, where p is the pressure at any given point of the transverse distribution and p_{max} is the center-line pressure. Plots of p/p_{max} against x/b, where x is the transverse distance from the center line to the point in question and b is the model beam, were constructed. These plots, together with the center-line pressures calculated by the method of reference 10, formed the basis for the construction of the chine-immersed transverse distributions presented in this report. In figure 5 good overall agreement is seen to exist in the distribution from center line to chine.

Figures 6 and 7 present experimental and calculated results for trims of 18° and 30°. For these trims the agreement between experiment and theory is generally comparable with that of the 6° conditions, although the experimental pressures in the vicinity of the stagnation point are seen to be lower than those predicted by theory. Since, however, the pressures were measured by means of an orifice-manometer system coupled with a slightly fluctuating model wetted length, this result was not entirely unexpected. For the case of steady-state planing, these peak pressures are largely a matter of academic rather than of practical interest and generally have little effect on the overall lift.

Although the bulk of the pressure data presented herein was obtained at a speed of 40 feet per second, a few runs were made at different speeds but at the same lift coefficient to determine whether differences in speed would affect the pressure data. Two such check runs were made with the flat plate at a trim of 12° and are compared in figure 8. These conditions represent a lift coefficient C_{L_b} of approximately 0.366. In one case the load equaled 64.5 pounds at a velocity of 40 feet per second; for the other, the applied load was 20 pounds at a velocity of 22.4 feet per second. Although there is some scatter, the resulting curves are seen to be in good agreement with each other and with the calculated pressures.

The absence of a speed effect is perhaps more forcefully illustrated by figure 9, which compares two conditions at approximately the same center-line normal-load coefficient $\left(C_{N_S}\right)_c$ but at two different trims, wetted lengths, and speeds. One condition is at a trim of 6°, $l/b = 0.45$, and $V = 40$ fps $(C_V = 12.20)$, whereas the other condition is at a trim of 12°, $l/b = 2.62$, and $V = 22.4$ fps $(C_V = 6.83)$. For these conditions $\left(C_{N_S}\right)_c$ averages 0.16. The agreement of these conditions between themselves and with theory is excellent and, together with the curves of figures 5 to 7, substantiates the use of the normal-load coefficient as the key parameter in predicting center-line pressures for the flat plate. The generally good agreement between the flat-plate theories and the experimental results permits the confident use of these theories together with planing data or planing theory (for example, ref. 11) to predict flat-plate pressure distributions, at least throughout the planing range of the present investigation.

Pressure Distributions on V-Shaped Surfaces

Without chine flare.- Representative pressure distributions for the 20° and 40° angle-of-dead-rise surfaces are presented in figures 10 and 11, respectively. In the upper part of each figure, the center-line pressures, which were obtained from transverse fairings of the experimental data, are presented and compared with calculated center-line or keel pressures. Two methods for calculating these distributions were used, both of which represent Smiley's (ref. 10) semiempirical application of Wagner's two-dimensional flat-plate theory, wherein the trim and wetted length for the particular condition being investigated are used to determine a normal-load coefficient. In one case the normal-load coefficient is derived from flat-plate lift curves. As can be seen, this procedure results in the prediction of excessive pressures. In the other case the experimental lift curves for the particular dead-rise angle being investigated were used to determine the normal-load coefficients from which the calculated curves were defined. This procedure results in generally underestimating the center-line pressures. In either case, the calculated distributions are not in good agreement with the experimental distributions.

The lower halves of figures 10 and 11 present experimental transverse distributions and compare them with those calculated by methods presented in reference 8 for the chine-immersed case (the center-line pressures match those calculated from flat-plate lift curves) and by the methods of reference 9 for the portion of the wetted area where the chines are not immersed. In order to apply the theory of reference 9 to planing at practical trims, an effective dead-rise angle was derived.

(See eq. (24), ref. 12.) Since the theory is limited to "small" dead-rise angles, with 45° suggested as the upper limit, the comparisons made herein are confined to conditions where the effective dead-rise angle is less than 45°. In most cases, the calculated curves of figures 10 and 11 are in poor agreement with experiment.

The reduction in pressure with increase in angle of dead rise is about as expected from the results of previous force measurements, where it was shown that the 40° angle-of-dead-rise surface developed approximately 30 percent less lift than the 20° angle-of-dead-rise surface. In general, the longitudinal and transverse distributions have similar shape. The most significant difference appears to be a general reduction of pressure along the longitudinal distributions as the angle of dead rise is increased. This effect is shown in figure 12, wherein distributions obtained with the flat plate, the 20°, and the 40° angle-of-dead-rise surfaces are compared at a trim of 18° and a mean wetted length of approximately 1 beam.

The location of the stagnation line (line of peak pressures) from keel to chine was determined from the pressure measurements. Although the actual peak pressures defining the stagnation line were not obtained, the stagnation line could be located with a fair degree of accuracy because of the close spacing of the orifices along the hull bottom. The stagnation-line location was in good agreement with the location based on tuft studies using a model having an 8-inch beam and a dead-rise angle of 20°. Typical underwater photographs of the model with tufts are shown in figure 13. Careful inspection of these photographs enables fairly close approximation of the location of the stagnation line in each instance. Curves defining the variation with trim of the difference between the lengths along the keel and chine to the stagnation point are shown in figure 14 for the dead-rise angles of 20° and 40°. Curves predicted on the basis of reference 12 are also included. It is apparent that, although the trends are the same, the theory predicts larger keel-to-chine variations than were found experimentally.

With chine flare.- In figures 15 and 16 transverse distributions obtained with the models having horizontal chine flare are compared with those obtained with the unflared models. The comparisons were made at representative trims for conditions where the wetted lengths along the keel were the same. In general, the transverse distributions for the models with and without chine flare are similar in shape, except that, in the vicinity of the chines, the flared models generally have significantly higher pressures. This difference would be expected, inasmuch as the lift for a given wetted length is increased when chine flare is used (ref. 5) since the flare effectively reduces the angle of dead rise at the chines. The differences due to chine flare can probably best be illustrated with longitudinal distributions along the chine buttocks as shown in figure 17. The region of positive pressure for the flared surface extends farther forward of the stagnation point than is the case for

the unflared surface. This, too, is largely due to the lower effective dead-rise angle that results when chine flare is introduced and is also believed to be due, to some extent, to the downward deflection imparted to the water just forward of the stagnation line (where the flow over the surface is primarily lateral) as it travels from keel to chine.

Additional Comparisons

In figure 18 the lift coefficients obtained by integration of the pressure distributions are compared with those obtained from the force measurements of references 1 to 5. Reasonable agreement is seen to exist. In figure 19 the integrated lift coefficients for the flat plate are compared with the lift theory of Shuford (ref. 11). The agreement here indicates that Shuford's equation can be used to predict the center-line normal-load coefficients without resorting to flat-plate lift curves. In figures 20 and 21, the locations of the centers of pressure based on pressure measurements also are compared with those obtained from the force measurements of references 1 to 5 and those calculated on the basis of reference 11, respectively. The general agreement here, too, is good. It is felt that the quality of the overall agreement between the integrated lift and center-of-pressure data with those obtained from force measurements strengthens the results obtained during both investigations; thus these data can be used with confidence in predicting hydrodynamic force characteristics during pure planing.

CONCLUDING REMARKS

Experimental pressure distributions have been obtained for a series of related planing surfaces having angles of dead rise ranging from 0° to 40°. In almost every case the integrated lifts resulting from these pressure distributions were well within 10 percent of the applied load. The results substantiate the use of the normal-load coefficient as the key parameter in predicting flat-plate center-line pressures. Comparison of the experimental pressure distributions with those predicted by the theories of Wagner, Korvin-Kroukovsky, and Chabrow shows that flat-plate pressures can be adequately predicted by these theories. The reduction in pressure accompanying an increase in angle of dead rise is about as would be expected on the basis of previous force measurements. The chief effect on the shape of the distribution as the dead-rise angle is increased appears to be a general reduction of pressure along the longitudinal distributions. When the dead-rise surfaces are modified with the addition of horizontal chine flare, the primary effects on the distribution are the increase of pressure near the chines and the extension of the region of positive pressures farther forward of the stagnation point in the vicinity of the chines. On the basis of comparisons of the experimental pressure distributions with those calculated from existing theories,

it appears that the existing theories do not adequately predict pressures for surfaces having dead rise.

The lift-coefficient and center-of-pressure data obtained are in good agreement with recent experimental and theoretical NACA research on planing surfaces.

Langley Aeronautical Laboratory,
National Advisory Committee for Aeronautics,
Langley Field, Va., June 13, 1955.

REFERENCES

1. Kapryan, Walter J., and Weinstein, Irving: The Planing Characteristics of a Surface Having a Basic Angle of Dead Rise of 20° and Horizontal Chine Flare. NACA TN 2804, 1952.

2. Blanchard, Ulysse J.: The Planing Characteristics of a Surface Having a Basic Angle of Dead Rise of 40° and Horizontal Chine Flare. NACA TN 2842, 1952.

3. Chambliss, Derrill B., and Boyd, George M., Jr.: The Planing Characteristics of Two V-Shaped Prismatic Surfaces Having Angles of Dead Rise of 20° and 40°. NACA TN 2876, 1953.

4. Weinstein, Irving, and Kapryan, Walter J.: The High-Speed Planing Characteristics of a Rectangular Flat Plate Over a Wide Range of Trim and Wetted Length. NACA TN 2981, 1953.

5. Kapryan, Walter J., and Boyd, George M., Jr.: The Effect of Vertical Chine Strips on the Planing Characteristics of V-Shaped Prismatic Surfaces Having Angles of Dead Rise of 20° and 40°. NACA TN 3052, 1953.

6. Rayle, Roy E., Jr.: An Investigation of the Influence of Orifice Geometry on Static Pressure Measurements. M. S. Thesis, M.I.T., 1949.

7. Truscott, Starr: The Enlarged NACA Tank, and Some of Its Work. NACA TM 918, 1939.

8. Korvin-Kroukovsky, B. V., and Chabrow, Faye R.: The Discontinuous Fluid Flow Past an Immersed Wedge. Preprint No. 169, S.M.F. Fund Paper, Inst. Aero. Sci. (Rep. No. 334, Project No. NR 062-012, Office of Nav. Res., Exp. Towing Tank, Stevens Inst. Tech.), Oct. 1948.

9. Pierson, John D.: On the Pressure Distribution for a Wedge Penetrating a Fluid Surface. Preprint No. 167, S.M.F. Fund Paper, Inst. Aero. Sci. (Rep. No. 336, Project No. NR 062-012, Office of Nav. Res., Exp. Towing Tank, Stevens Inst. Tech.), June 1948.

10. Smiley, Robert F.: A Semiempirical Procedure for Computing the Water-Pressure Distribution on Flat and V-Bottom Prismatic Surfaces During Impact or Planing. NACA TN 2583, 1951.

11. Shuford, Charles L., Jr.: A Review of Planing Theory and Experiment With a Theoretical Study of Pure-Planing Lift of Rectangular Flat Plates. NACA TN 3233, 1954.

12. Pierson, John D., and Leshnover, Samuel: A Study of the Flow, Pressures, and Loads Pertaining to Prismatic Vee-Planing Surfaces. S.M.F. Fund Paper No. FF-2, Inst. Aero. Sci. (Rep. No. 382, Project No. NR 062-012, Office of Nav. Res., Exp. Towing Tank, Stevens Inst. Tech.), May 1950.

TABLE I

PURE PLANING PRESSURE DATA OBTAINED WITH A RECTANGULAR FLAT PLATE

LANGLEY TANK MODEL 303

(Density of tank water, 63.4 lb/cu ft)

Run	C_Δ	C_V	$\frac{l_m}{b}$	$\frac{l_p}{b}$	C_{L_b}	C_{L_S}	Pressure p/q at orifice number -												
							1	2	3	4	5	6	7	8	9	10	11	12	13
$\tau = 4^\circ$																			
1	3.28	12.20	0.45	0.28	0.0440	0.0978	0.0189	0.0330	0.0757	0.0897	0.0211	0.0054							
2	4.77	12.20	1.05	.73	.0640	.0610	.0097	.0205	.0292	.0324	.0378	.0432	0.0540	0.0773	0.0908	0.0254			
3	7.46	12.23	2.62	1.89	.0998	.0381	.0000	.0110	.0137	.0137	.0137	.0137	.0137	.0137	.0137	.0179	0.0192	0.0233	0.0247
4	7.33	12.20	3.12	2.28	.0984	.0315	-.0022	.0059	.0108	.0119	.0119	.0124	.0119	.0114	.0119	.0124	.0146	.0157	.0157
5	10.01	12.26	5.12	3.44	.1332	.0260	0000	.0041	.0096	.0109	.0096	.0096	.0096	.0096	.0096	.0096	.0096	.0096	.0096
$\tau = 6^\circ$																			
6	5.45	12.20	0.45	0.36	0.0732	0.1627	0.0216	0.0497	0.0796	0.1484	0.1078	0.0102							
7	7.75	12.17	1.07	.78	.1046	.0977	.0093	.0251	.0349	.0409	.0473	.0562	0.0709	0.1036	0.1862	0.0338			
8	7.03	9.12	3.12	2.21	.1690	.0342	-.0029	.0106	.0145	.0174	.0194	.0194	.0213	.0194	.0213	.0252	0.0262	0.0262	0.0291
9	8.56	10.13	2.87	2.01	.1668	.0381	-.0034	.0111	.0162	.0221	.0213	.0170	.0230	.0187	.0187	.0315	.0272	.0261	.0298
10	12.48	12.20	3.10	2.16	.1676	.0341	.0022	.0141	.0195	.0211	.0217	.0222	.0217	.0228	.0228	.0266	.0271	.0287	.0331
11	19.38	15.28	2.87	2.04	.1660	.0378	.0100	.0179	.0245	.0248	.0262	.0269	.0262	.0280	.0273	.0286	.0327	.0327	.0341
12	12.99	12.23	2.70	1.99	.1736	.0643	0000	.0110	.0179	.0220	.0192	.0220	.0206	.0233	.0220	.0302	.0302	.0357	.0385
13	15.63	12.20	4.75	3.03	.2110	.0444	-.0005	.0086	.0173	.0168	.0173	.0162	.0157	.0162	.0157	.0173	.0178	.0173	.0168
14	16.29	12.20	5.07	3.48	.2188	.0432	-.0138	.0097	.0110	.0138	.0124	.0110	.0152	.0124	.0138	.0166	.0152	.0179	.0138
15	16.29	12.26	5.00	2.95	.2168	.0434	.0014	.0123	.0150	.0191	.0164	.0164	.0164	.0164	.0164	.0205	.0205	.0205	.0205
$\tau = 9^\circ$																			
16	8.31	12.23	0.50	0.38	0.1112	0.2224	0.0316	0.0742	0.1195	0.2321	0.1868	0.0055							
17	11.42	12.20	.87	.64	.1534	.1763	.0110	.0386	.0566	.0731	.0883	.1159	0.1863	0.3436	0.0014				
18	18.62	12.20	2.45	1.80	.2502	.1021	0000	.0152	.0248	.0276	.0290	.0290	.0331	.0331	.0359	0.0442	0.0511	0.0621	0.0745
19	19.04	12.20	2.50	1.83	.2558	.1023	-.0055	.0193	.0276	.0317	.0331	.0331	.0386	.0386	.0400	.0442	.0497	.0607	.0704
20	19.94	12.23	2.75	1.92	.2666	.0969	0000	.0178	.0233	.0247	.0261	.0275	.0302	.0302	.0330	.0357	.0426	.0481	.0536
21	20.32	12.26	2.92	2.00	.2704	.0926	.0082	.0205	.0273	.0301	.0314	.0314	.0383	.0383	.0342	.0438	.0451	.0519	.0560
22	27.90	12.17	5.12	3.50	.3768	.0736	-.0111	.0097	.0152	.0180	.0180	.0180	.0180	.0180	.0180	.0250	.0250	.0264	.0250
23	27.90	12.20	5.03	3.38	.3748	.0742	0000	.0152	.0193	.0235	.0235	.0235	.0235	.0233	.0235	.0276	.0276	.0276	.0276
24	27.90	12.20	5.00	3.51	.3748	.0750	-.0124	.0097	.0138	.0152	.0152	.0152	.0166	.0166	.0152	.0221	.0221	.0233	.0221
25	27.90	12.23	4.97	3.53	.3730	.0750	-.0011	.0145	.0172	.0162	.0194	.0307	.0194	.0237	.0264	.0194	.0291	.0329	.0270
$\tau = 12^\circ$																			
26	10.63	12.20	0.50	0.38	0.1432	0.2864	0.0433	0.1007	0.1721	0.2774	0.2194	0.0276							
27	16.27	12.17	1.06	.72	.2198	.2074	.0264	.0582	.0763	.0943	.1110	.1359	0.1789	0.2913	0.3079	0.0236			
28	27.48	12.20	2.62	1.83	.3692	.1409	.0069	.0304	.0386	.0428	.0469	.0483	.0498	.0538	.0566	.0621	0.0690	0.0773	0.0897
29	8.52	6.83	2.62	1.90	.3652	.1394	-.0132	.0088	.0176	.0264	.0264	.0352	.0352	.0396	.0396	.0484	.0528	.0660	.0792
$\tau = 18^\circ$																			
30	15.34	12.20	0.50	0.33	0.2062	0.4124	0.0869	0.1697	0.2622	0.4430	0.3560	0.0276							
31	24.28	12.23	1.00	.69	.3246	.3246	.0508	.0961	.1222	.1483	.1799	.2184	0.2884	0.4642	0.3887	0.0165			
$\tau = 24^\circ$																			
32	18.66	12.20	0.50	0.34	0.2508	0.5016	0.1270	0.2263	0.3395	0.5285	0.4623	0.0110							
33	32.16	12.20	1.06	.71	.4322	.4080	.0635	.1270	.1642	.2001	.2291	.2801	0.3491	0.4772	0.6238	0.0800			
$\tau = 30^\circ$																			
34	22.11	12.29	0.53	0.34	0.2928	0.5364	0.1578	0.2734	0.3862	0.5209	0.5780	0.1414	0.0109						
35	38.60	12.33	1.07	.68	.5062	.4731	.0956	.1724	.2155	.2492	.2990	.3462	.4176	0.5119	0.6033	0.3341			

TABLE I.- Continued

PURE PLANING PRESSURE DATA OBTAINED WITH A RECTANGULAR FLAT PLATE

LANGLEY TANK MODEL 303

(Density of tank water, 63.4 lb/cu ft)

Run	Pressure p/q at orifice number -														
	14	15	16	17	18	19	20	21	22	23	24	25	26	27	28
$\tau = 4^\circ$															
1															
2															
3	0.0357	0.0494	0.0687	0.1099	0.0824	0.0055									
4	.0162	.0270	.0292	.0324	.0454	.0762	0.0263								
5	.0096	.0109	.0109	.0109	.0164	.0123	.0123	0.0123	0.0123	0.0150	0.0232	0.0273	0.0383	0.0492	0.0656
$\tau = 6^\circ$															
6															
7															
8	0.0368	0.0426	0.0465	0.0523	0.0659	0.1017	0.1240	0.0388							
9	.0468	.0554	.0613	.0758	.1157	.0885	.0128								
10	.0390	.0455	.0493	.0536	.0710	.1160	.0520	.0087							
11	.0442	.0517	.0580	.0683	.0900	.1269	.0107								
12	.0591	.0700	.0920	.1085	.1470	.0247									
13	.0211	.0252	.0232	.0232	.0286	.0264	.0264	.0378	0.0340	0.0411	0.0524	0.0827	0.1597	0.0319	
14	.0195	.0207	.0207	.0248	.0235	.0207	.0221	.0221	.0221	.0276	.0331	.0428	.0566	.0635	0.0883
15	.0205	.0260	.0260	.0260	.0314	.0260	.0287	.0287	.0287	.0342	.0451	.0601	.0916	.1299	.2050
$\tau = 9^\circ$															
16															
17															
18	0.1214	0.1960	0.3574	0.0138											
19	.1049	.1463	.2387	.2650	0.0235										
20	.0797	.0934	.1167	.1703	.3118	0000									
21	.0697	.0765	.0888	.0998	.1285	.3281	0.0178								
22	.0264	.0319	.0319	.0319	.0374	.0361	.0361	0.0388	0.0388	0.0499	0.0582	0.0755	0.0957	0.1151	0.1692
23	.0317	.0345	.0345	.0345	.0428	.0414	.0414	.0469	.0469	.0538	.0621	.0814	.1104	.1214	.2498
24	.0262	.0317	.0317	.0317	.0373	.0345	.0345	.0400	.0414	.0497	.0621	.1800	.1076	.1394	.2291
25	.0248	.0313	.0313	.0323	.0388	.0420	.0350	.0453	.0534	.0636	.0652	.0873	.1450	.2237	.2862
$\tau = 12^\circ$															
26															
27															
28	0.1242	0.1532	0.2042	0.3381	0.3188	0.0069									
29	.1144	.1408	.1761	.2817	.4401	.0044									
$\tau = 18^\circ$															
30															
31															
$\tau = 24^\circ$															
32															
33															
$\tau = 30^\circ$															
34															
35															

TABLE I.- Continued

PURE PLANING PRESSURE DATA OBTAINED WITH A RECTANGULAR FLAT PLATE

LANGLEY TANK MODEL 305

(Density of tank water, 63.4 lb/cu ft)

Run	Pressure p/q at orifice number -														
	29	30	31	32	33	34	35	36	37	38	39	40	41	42	43
$\tau = 4^\circ$															
1			0.0151	0.0541	0.1059	0.1616	0.0573	0.0124							
2			.0022	.0211	.0324	.0389	.0470	.0600	0.0816	0.1243	0.1681	0.0768	0.0022		
3			-.0055	.0069	.0110	.0165	.0165	.0206	.0206	.0220	.0220	.0261	.0261	0.0330	0.0398
4			-.0075	.0043	.0086	.0119	.0130	.0157	.0173	.0178	.0184	.0173	.0184	.0238	.0243
5	0.0793	0.0543	-.0082	0000	.0082	.0109	.0109	.0137	.0137	.0137	.0137	.0137	.0137	.0137	.0137
$\tau = 6^\circ$															
6			0.0184	0.0605	0.1072	0.1917	0.2491	0.0519							
7			.0027	.0256	.0398	.0524	.0644	.0818	0.1069	0.1541	0.2777	0.1677	-0.0005		
8			-.0097	.0078	.0135	.0223	.0242	.0281	.0310	.0359	.0369	.0378	.0378	0.0407	0.0443
9			-.0102	.0111	.0187	.0230	.0281	.0298	.0349	.0341	.0341	.0373	.0417	.0443	.0536
10			-.0027	.0130	.0206	.0260	.0282	.0298	.0320	.0341	.0347	.0368	.0379	.0433	.0477
11			.0048	.0176	.0248	.0300	.0317	.0338	.0351	.0379	.0386	.0386	.0400	.0466	.0510
12			.0041	.0110	.0206	.0275	.0275	.0330	.0330	.0357	.0385	.0426	.0440	.0522	.0618
13			-.0064	.0070	.0157	.0205	.0222	.0232	.0243	.0259	.0265	.0265	.0265	.0308	.0292
14	0.1490	0.1697	-.0083	.0083	.0138	.0166	.0179	.0221	.0235	.0235	.0235	.0248	.0248	.0248	.0248
15	.0246		-.0041	.0096	.0164	.0219	.0219	.0273	.0273	.0273	.0273	.0314	.0314	.0314	.0314
$\tau = 9^\circ$															
16			0.0316	0.0947	0.1634	0.2953	0.4079	0.0536							
17			.0083	.0442	.0731	.0980	.1283	.1725	0.2539	0.5092	0.0317				
18			-.0055	.0193	.0317	.0428	.0442	.0524	.0566	.0607	.0635	0.0690	0.0759	0.0925	0.1201
19			.0014	.0248	.0345	.0442	.0497	.0524	.0566	.0621	.0635	.0690	.0787	.0925	.1132
20			-.0069	.0192	.0261	.0412	.0426	.0467	.0508	.0549	.0577	.0618	.0687	.0769	.0865
21			.0014	.0219	.0342	.0437	.0478	.0519	.0560	.0588	.0601	.0642	.0684	.0738	.0820
22	0.2899	0.0638	-.0014	.0125	.0236	.0305	.0347	.0374	.0402	.0402	.0416	.0430	.0444	.0458	.0472
23	.2553	.0069	.0014	.0165	.0276	.0304	.0359	.0386	.0414	.0442	.0442	.0442	.0455	.0497	.0497
24	.2801	.0083	-.0055	.0138	.0221	.0276	.0317	.0345	.0373	.0386	.0400	.0400	.0442	.0483	.0469
25	.0092		-.0081	.0124	.0221	.0313	.0296	.0340	.0318	.0588	.0474	.0377	.0377	.0377	.0485
$\tau = 12^\circ$															
26			0.0428	0.1283	0.2303	0.3878	0.4623	0.1201							
27			.0222	.0694	.1026	.1332	.1623	.2011	0.2635	0.3911	0.5853	0.1326			
28			.0083	.0373	.0538	.0649	.0718	.0773	.0828	.0869	.0924	.0966	0.1076	0.1242	0.1463
29			-.0176	.0132	.0308	.0440	.0572	.0616	.0704	.0704	.0748	.0836	.0924	.1232	.1364
$\tau = 18^\circ$															
30			0.0911	0.2208	0.3588	0.5561	0.7024	0.1339							
31			.0481	.1222	.1744	.2225	.2692	.3310	0.4217	0.5920	0.7630	0.1524			
$\tau = 24^\circ$															
32			0.1366	0.3036	0.4692	0.6734	0.9205	0.0317							
33			.0690	.1739	.2484	.3036	.3629	.4319	0.5299	0.6679	0.8666	0.4747			
$\tau = 30^\circ$															
34			0.1754	0.3686	0.5399	0.7099	0.8133	0.4638	0.0462						
35			.1091	.2398	.3260	.3920	.4620	.5375	.6290	0.7382	0.8392	0.6789	0.0215		

TABLE I.- Continued

PURE PLANING PRESSURE DATA OBTAINED WITH A RECTANGULAR FLAT PLATE

LANGLEY TANK MODEL 503

(Density of tank water, 63.4 lb/cu ft)

Run	Pressure p/q at orifice number -														
	44	45	46	47	48	49	50	51	52	53	54	55	56	57	58
$\tau = 4^\circ$															
1															
2															
3	0.0563	0.0689	0.0961	0.1552	0.1593	0.0041									
4	.0292	.0346	.0389	.0443	.0540	.1146	0.0839								
5	.0137	.0137	.0137	.0137	.0137	.0137	.0205	0.0205	0.0246	0.0246	0.0287	0.0396	0.0588	0.0793	0.1012
$\tau = 6^\circ$															
6															
7															
8	0.0504	0.0562	0.0620	0.0679	0.0834	0.1492	0.2674	0.0087							
9	.0646	.0791	.0936	.1157	.1573	.2611	.0212								
10	.0542	.0618	.0672	.0769	.0905	.1674	.1691	.0027							
11	.0604	.0690	.0787	.0939	.1128	------	.0255								
12	.0824	.1016	.1277	.1648	.1964	.0604									
13	.0292	.0319	.0324	.0319	.0324	.0373	.0389	.0427	0.0470	0.0568	0.0735	0.1200	0.2502	0.1289	0.0070
14	.0262	.0276	.0290	.0290	.0359	.0317	.0359	.0373	.0400	.0442	.0483	.0593	.0800	.0980	.1311
15	.0328	.0355	.0355	.0355	.0355	.0355	.0424	.0451	.0478	.0533	.0615	.0834	.1394	.1982	.2939
$\tau = 9^\circ$															
16															
17															
18	0.1822	0.2608	0.4112	0.2290	0.0055										
19	.1587	.2139	.3188	.4582	.0800										
20	.1140	.1400	.1744	.2129	.4079	0.0055									
21	.0971	.1080	.1205	.1435	.1736	.3800	0.0314								
22	.0485	.0513	.0513	.0513	.0513	.0527	.0582	0.0638	0.0735	0.0763	0.0846	0.1054	0.1456	0.1789	0.2427
23	.0497	.0552	.0552	.0552	.0552	.0607	.0634	.0690	.0745	.0814	.0925	.1187	.1711	.2208	.3367
24	.0483	.0524	.0524	.0524	.0524	.0552	.0607	.0662	.0718	.0787	.0924	.1159	.1642	.2111	.3146
25	.0507	.0625	.0480	.0517	.0555	.0625	.0620	.0674	.0749	.0776	.0959	.1326	.2118	.3175	.3999
$\tau = 12^\circ$															
26															
27															
28	0.1891	0.2305	0.2939	0.4264	0.5865	0.0097									
29	.1760	.2113	.2685	.3785	.6162	0000									
$\tau = 18^\circ$															
30															
31															
$\tau = 24^\circ$															
32															
33															
$\tau = 30^\circ$															
34															
35															

TABLE I.- Continued

PURE PLANING PRESSURE DATA OBTAINED WITH A RECTANGULAR FLAT PLATE

LANGLEY TANK MODEL 303

(Density of tank water, 63.4 lb/cu ft)

Run	Pressure p/q at orifice number -														
	59	60	61	62	63	64	65	66	67	68	69	70	71	72	73
$\tau = 4^\circ$															
1			0.0184	0.0562	0.1065	0.1643	0.0649	0.0157							
2			.0054	.0227	.0303	.0411	.0470	.0616	0.0876	0.1254	0.1751	0.0800	0.0022		
3			-.0027	.0055	.0096	.0165	.0137	.0165	.0192	.0179	.0192	.0206	.0261	0.0371	0.0398
4			-.0065	.0043	.0086	.0135	.0130	.0130	.0162	.0173	.0184	.0162	.0184	.0265	.0259
5	0.1162	0.1627	-.0068	.0014	.0041	.0123	.0123	.0123	.0123	.0123	.0123	.0123	.0123	.0178	.0137
$\tau = 6^\circ$															
6			0.0227	0.0643	0.1115	0.1971	0.2805	0.0659							
7			.0054	.0262	.0393	.0540	.0655	.0824	0.1129	0.1541	0.2722	0.2156	-0.0022		
8			-.0078	.0078	.0116	.0213	.0213	.0242	.0291	.0291	.0339	.0349	.0368	0.0436	0.0445
9			-.0042	.0077	.0161	.0264	.0264	.0281	.0331	.0281	.0323	.0391	.0425	.0485	.0519
10			-.0022	.0125	.0179	.0244	.0266	.0260	.0298	.0314	.0336	.0331	.0374	.0439	.0466
11			.0055	.0189	.0245	.0300	.0297	.0314	.0345	.0362	.0386	.0379	.0406	.0500	.0510
12			0000	.0124	.0206	.0302	.0275	.0316	.0357	.0343	.0330	.0385	.0440	.0536	.0646
13			-.0049	.0086	.0135	.0205	.0205	.0211	.0254	.0254	.0270	.0265	.0276	.0330	.0297
14	0.2042	0.3478	-.0041	.0055	.0124	.0193	.0179	.0207	.0221	.0207	.0221	.0221	.0235	.0262	.0248
15	.1012		.0027	.0096	.0178	.0232	.0232	.0260	.0301	.0260	.0301	.0301	.0314	.0328	.0328
$\tau = 9^\circ$															
16			0.0302	0.0975	0.1634	0.2871	0.4581	0.0948							
17			0000	.0414	.0745	.1048	.1325	.1794	0.2622	0.4858	0.0787				
18			0000	.0207	.0317	.0442	.0455	.0497	.0580	.0593	.0621	0.0690	0.0828	0.0994	0.1270
19			.0055	.0248	.0359	.0469	.0483	.0524	.0593	.0607	.0649	.0662	.0787	.0952	.1173
20			.0014	.0233	.0316	.0426	.0440	.0467	.0536	.0563	.0591	.0563	.0700	.0852	.0975
21			.0123	.0232	.0369	.0478	.0492	.0560	.0615	.0588	.0642	.0670	.0697	.0820	.0889
22	0.3939	0.5911	-.0014	.0138	.0194	.0305	.0305	.0333	.0374	.0374	.0430	.0430	.0444	.0499	.0485
23	.5134	.0276	0000	.0152	.0235	.0331	.0331	.0359	.0400	.0400	.0442	.0442	.0442	.0511	.0497
24	.5120	.0304	-.0041	.0124	.0221	.0304	.0304	.0359	.0386	.0365	.0400	.0400	.0455	.0497	.0483
25	.0749		-.0129	.0167	.0242	.0242	.0313	.0313	.0275	.0458	.0464	.0366	.0340	.0528	.0490
$\tau = 12^\circ$															
26			0.0483	0.1366	0.2360	0.3892	0.4885	0.1573							
27			.0222	.0666	.1026	.1359	.1664	.2094	0.2746	0.3994	0.6020	0.2067			
28			.0083	.0345	.0524	.0662	.0704	.0773	.0856	.0883	.0925	.0980	0.1090	0.1311	0.1504
29			-.0220	.0088	.0308	.0440	.0484	.0616	.0704	.0704	.0792	.0880	.0968	.1144	.1408
$\tau = 18^\circ$															
30			0.1007	0.2277	0.3685	0.5361	0.7273	0.1863							
31			.0494	.1222	.1772	.2294	.2788	.3447	0.4409	0.6030	0.7980	0.2225			
$\tau = 24^\circ$															
32			0.1421	0.3091	0.4830	0.6886	0.9343	0.0511							
33			.0743	.1766	.2512	.3146	.3754	.4499	0.5306	0.6845	0.8777	0.7960	0000		
$\tau = 30^\circ$															
34			0.1795	0.3781	0.5562	0.7290	0.8459	0.5508	0.0653						
35			.1064	.2398	.3381	.4108	.4795	.5550	.6479	0.7610	0.8661	0.7597	0.0229		

TABLE I.- Continued

PURE PLANING PRESSURE DATA OBTAINED WITH A RECTANGULAR FLAT PLATE

LANGLEY TANK MODEL 303

(Density of tank water, 63.4 lb/cu ft)

Run	Pressure p/q at orifice number -														
	74	75	76	77	78	79	80	81	82	83	84	85	86	87	88
$\tau = 4^\circ$															
1															
2															
3	0.0577	0.0714	0.1030	0.1621	0.1758	0.0027									
4	.0281	.0324	.0411	.0497	.0573	.1243	0.1049								
5	.0137	.0137	.0191	.0205	.0150	.0178	.0164	0.0232	0.0232	0.0260	0.0314	0.0424	0.0642	0.0848	0.1162
$\tau = 6^\circ$															
6															
7															
8	0.0504	0.0543	0.0659	0.0795	0.0872	0.1608	0.2936	0.0116							
9	.0587	.0758	.0987	.1295	.1600	.2892	.0136								
10	.0526	.0553	.0688	.0807	.0927	.1701	.1983	.0043							
11	.0590	.0670	.0828	.1062	.1107	------	.0259								
12	.0879	.0989	.1346	.1786	.2033	.0700									
13	.0297	.0292	.0330	.0357	.0340	.0373	.0389	.0432	0.0492	0.0627	0.0805	0.1346	0.2756	0.1619	0.0054
14	.0235	.0235	.0290	.0304	.0276	.0317	.0276	.0373	.0386	.0469	.0483	.0633	.0814	.1076	.1463
15	.0328	.0328	.0369	.0396	.0369	.0396	.0355	.0451	.0506	.0560	.0656	.0889	.1449	.2092	.3021
$\tau = 9^\circ$															
16															
17															
18	0.1960	0.2636	0.4168	0.4292	0.0041										
19	.1670	.2167	.3215	.4871	.1021										
20	.1222	.1387	.1854	.2472	.4093	0.0110									
21	.0998	.1094	.1353	.1613	.1777	.3828	0.0355								
22	.0485	.0485	.0527	.0555	.0527	.0596	.0569	0.0652	0.0721	0.0791	0.0888	0.1123	0.1484	0.1900	0.2580
23	.0497	.0497	.0566	.0580	.0566	.0607	.0633	.0676	.0745	.0856	.1076	.1270	.1794	.2346	.3533
24	.0483	.0524	.0552	.0566	.0538	.0580	.0566	.0662	.0745	.0800	.0966	.1228	.1697	.2249	.3284
25	.0517	.0426	.0490	.0517	.0609	.0668	.0598	.0652	.0771	.0948	.1046	.1407	.2231	.3369	.4183
$\tau = 12^\circ$															
26															
27															
28	0.1987	0.2346	0.3077	0.4264	0.6210	0.0110									
29	.1805	.2201	.2817	.3873	.6162	0000									
$\tau = 18^\circ$															
30															
31															
$\tau = 24^\circ$															
32															
33															
$\tau = 30^\circ$															
34															
35															

TABLE I.- Concluded

PURE PLANING PRESSURE DATA OBTAINED WITH A RECTANGULAR FLAT PLATE

LANGLEY TANK MODEL 303

(Density of tank water, 63.4 lb/cu ft)

Run	Pressure p/q at orifice number -											
	89	90	91	92	93	94	95	96	97	98	99	100
$\tau = 4^\circ$												
1			0.0162	0.0395				0.0179	0.0574			
2			.0060	.0453	0.0986			.0076	.0455	0.1243		
3			0000	.0178	.0151	0.0865		0000	.0192	.0220	0.0989	
4			-.0076	.0130	.0119	.0336		-.0054	.0114	.0179	.0390	
5	0.1230	0.1832	-.0027	.0109	.0082	.0150	0.0889	-.0041	.0123	.0150	.0178	0.1033
$\tau = 6^\circ$												
6			0.0200	0.2016				0.0232	0.2623			
7			.0060	.0594	0.1258			.0054	.0653	0.1590		
8			-.0078	.0252	.0252	0.0581		-.0078	.0262	.0349	0.0640	
9			-.0068	.0255	.0196	.0799		-.0083	.0281	.0357	.0910	
10			0000	.0255	.0260	.0601		-.0011	.0260	.0336	.0661	
11			.0076	.0310	.0310	.0714		.0083	.0300	.0373	.0787	
12			.0027	.0302	.0261	.1401		0000	.0288	.0371	.1250	
13			-.0043	.0195	.0190	.0282		-.0063	.0195	.0260	.0319	
14	0.2153	0.3671	-.0069	.0166	.0138	.0262	0.1201	-.0097	.0193	.0248	.0290	0.1394
15	.1189		.0014	.0219	.0191	.0314	.2720	.0014	.0246	.0287	.0353	.3076
$\tau = 9^\circ$												
16			0.0316	0.3500				0.0371	0.4240			
17			.0083	.1187	0.5051			.0110	.1339	0.4913		
18			.0041	.0428	.0469	0.4071		0000	.0442	.0607	0.4112	
19			.0014	.0469	.0483	.3022		.0028	.0511	.0621	.3213	
20			.0055	.0440	.0433	.1566		.0041	.0728	.0591	.0014	
21			.0096	.0465	.0465	.1135		.0096	.0492	.0629	.1258	
22	0.4203	0.4785	-.0083	.0277	.0264	.0444	0.2273	-.0014	.0305	.0402	.0513	0.2483
23	.5173	.0386	0000	.0304	.0331	.0469	.3271	.0014	.0345	.0442	.0552	.3381
24	.5063	.0442	-.0083	.0262	.0248	.0442	.3022	-.0055	.0304	.0386	.0524	.3160
25	.1013		.0022	.0313	.0404	.0469	.3751	0000	.0280	.0377	.0512	.4140
$\tau = 12^\circ$												
26			0.0483	0.3905				0.0511	0.4733			
27			.0250	.1498	0.3649			.0236	.1651	0.3913		
28			.0069	.0649	.0743	0.2705		.0097	.0731	.0897	0.3056	
29			-.0176	.0440	.0616	.2463		-.0176	.0572	.0748	.2817	
$\tau = 18^\circ$												
30			0.0980	0.6182				0.0994	0.7162			
31			.0508	.2486	0.5673			.0494	.2747	0.5920		
$\tau = 24^\circ$												
32			0.1408	0.8432				0.1435	0.9287			
33			.0800	.3318	0.6258			.0787	.3712	0.6776		
$\tau = 30^\circ$												
34			0.1795	0.7698				0.1795	0.8296			
35			.1172	.4283	0.6977			.1131	.4701	0.7516		

TABLE II

PURE PLANING PRESSURE DATA OBTAINED WITH A PLANING SURFACE

HAVING A 20° ANGLE OF DEAD RISE

LANGLEY TANK MODEL 301

(Density of tank water, 63.4 lb/cu ft)

Run	C_Δ	C_V	$\frac{l_m}{b}$	$\frac{l_p}{b}$	C_{L_b}	C_{L_B}	Pressure p/q at orifice number -											
							1	2	3	4	5	6	7	8	9	10	11	12
$\tau = 4°$																		
1	2.77	12.14	0.81	0.68	0.0376	0.0463	0.0410	0.0356	0.0115	0.0060								
2	4.90	12.17	2.25	1.35	.0662	.0294	.0033	.0076	.0109	.0100	0.0163	0.0125	0.0158	0.0174	0.0163	0.0239	0.0544	0.0120
3	7.33	12.11	4.90	3.15	.1002	.0204	.0022	.0049	.0082	.0053	.0110	.0066	.0088	.0099	.0077	.0104	.0121	.0121
$\tau = 6°$																		
4	2.98	12.20	0.49	0.59	0.0400	0.0816	0.0509	0.0173	0.0076									
5	4.69	12.20	.86	.68	.0630	.0732	.0179	.0374	.0715	0.0872	0.0146							
6	7.24	12.23	1.74	1.25	.0968	.0556	.0092	.0156	.0205	.0199	.0280	0.0264	0.0663	0.0377	0.0426	0.1045	0.0086	
7	8.52	12.20	2.36	1.67	.1144	.0485	.0043	.0103	.0146	.0135	.0211	.0173	.0211	.0227	.0211	.0260	.0357	0.0644
8	9.37	12.23	2.74	1.97	.1252	.0457	.0048	.0086	.0129	.0119	.0189	.0151	.0172	.0189	.0167	.0226	.0275	.0291
9	9.58	12.20	2.94	2.08	.1288	.0438	.0043	.0081	.0125	.0108	.0173	.0130	.0179	.0173	.0168	.0217	.0260	.0282
10	13.42	12.20	5.11	3.37	.1804	.0353	.0000	.0081	.0076	.0054	.0097	.0076	.0092	.0125	.0092	.0114	.0141	.0141
$\tau = 9°$																		
11	5.11	12.20	0.45	0.41	0.0686	0.1524	0.0709	0.1479	0.0309	0.0065								
12	7.88	12.20	.95	.67	.1058	.1114	.0227	.0390	———	.0818	0.1717	0.0569	0.0081					
13	14.78	12.23	1.97	1.75	.1976	.1000	.0059	.0129	.0189	.0183	.0253	.0257	.0286	0.0307	0.0296	0.0361	0.0426	0.0566
14	23.13	12.20	4.97	3.30	.3108	.0625	-.0038	.0032	.0092	.0065	.0097	.0092	.0130	.0125	.0125	.0152	.0184	.0184
$\tau = 12°$																		
15	7.24	12.17	0.42	0.36	0.0978	0.2328	0.0644	0.1568	0.1891	0.0028								
16	11.50	12.20	.86	.63	.1546	.1798	.0265	.0488	.0655	.0948	0.1533	0.2829	0.0042					
17	18.02	15.25	.92	.65	.1550	.1685	.0312	.0499	.0669	.0919	.1418	.2444	.0517					
18	21.17	12.20	2.24	1.57	.2844	.1270	.0125	.0237	.0320	.0320	.0390	.0404	.0474	0.0516	0.0530	0.0683	0.0906	0.1798
19	11.84	9.15	2.36	1.77	.2828	.1198	.0025	.0074	.0173	.0173	.0223	.0223	.0272	.0272	.0322	.0421	.0520	.0768
20	8.52	7.72	2.41	1.68	.2860	.1187	-.0041	.0095	.0190	.0203	.0298	.0284	.0338	.0366	.0393	.0460	.0569	.0785
21	33.01	15.19	2.62	1.80	.2862	.1092	.0144	.0216	.0288	.0288	.0342	.0342	.0405	.0423	.0425	.0494	.0629	.0683
22	19.04	9.09	4.98	3.27	.4608	.0925	-.0126	.0000	.0050	.0050	.0126	.0126	.0126	.0126	.0126	.0226	.0251	.0251
23	33.87	12.20	4.98	3.22	.4552	.0914	.0000	.0404	.0139	.0139	.0237	.0223	.0223	.0209	.0209	.0307	.0320	.0320
$\tau = 18°$																		
24	11.50	12.17	0.54	0.41	0.1552	0.2874	0.0644	0.1372	0.2391	0.2647	0.0014							
25	18.62	12.26	1.02	.72	.2478	.2429	.0331	.0635	.0855	.1048	.1366	0.1849	0.2718	0.2552	0.0193			
26	34.93	12.20	2.53	1.65	.4694	.1855	.0209	.0362	.0488	.0543	.0627	.0627	.0683	.0752	.0752	0.0864	0.1045	0.1240
$\tau = 24°$																		
27	14.27	12.20	0.52	0.34	0.1918	0.3653	0.0892	0.1784	0.3038	0.3693	-0.0028							
28	24.07	12.20	.97	.66	.3234	.3344	.0404	.0808	.1115	.1393	.1798	0.2383	0.3414	0.3874	-0.0056			
$\tau = 30°$																		
29	16.40	12.17	0.52	0.33	0.2214	0.4282	0.1316	0.2269		0.4649	0.0406							
30	28.33	12.20	1.06	.65	.3806	.3590	.0725	.1282		.2007	.2452	0.3093	0.3971	0.4013	0.0516			

TABLE II.- Continued

PURE PLANING PRESSURE DATA OBTAINED WITH A PLANING SURFACE

HAVING A 20° ANGLE OF DEAD RISE

LANGLEY TANK MODEL 301

(Density of tank water, 63.4 lb/cu ft)

Run	Pressure p/q at orifice number -														
	13	14	15	16	17	18	19	20	21	22	23	24	25	26	27
$\tau = 4^\circ$															
1															
2	0.0065	0.0022													
3	.0126	.0099	0.0126	0.0159	0.0203	0.0148	0.0148	0.0176	0.0198	0.0291	0.0434	0.0044			
$\tau = 6^\circ$															
4															
5															
6															
7	0.0368	0.0032													
8	.0388	.0478	0.0810	0.0947	0.0172										
9	.0363	.0385	.0607	.1034	.0601										
10	.0146	.0114	.0157	.0179	.0233	0.0168	0.0179	0.0179	0.0217	0.0255	0.0298	0.0363	0.0731	0.0975	0.0271
$\tau = 9^\circ$															
11															
12															
13	0.1024	0.1471	0.0728	0.0092											
14	.0200	.0168	.0206	.0238	0.0238	0.0217	0.0260	0.0282	0.0330	0.0385	0.0471	0.0617	0.1289	0.1089	0.0087
$\tau = 12^\circ$															
15															
16															
17															
18	0.0307														
19	.1561	0.2451	0.0248												
20	.1394	.2396	.0745												
21	.0872	.1106	.1816	0.2562	0.0647										
22	.0251	.0251	.0251	.0301	.0301	0.0352	0.0377	0.0377	0.0377	0.0477	0.0578	0.0703	0.1080	0.1506	0.2335
23	.0334	.0293	.0334	.0390	.0390	.0362	.0446	.0446	.0474	.0543	.0683	.0808	.1449	.2090	.1561
$\tau = 18^\circ$															
24															
25															
26	0.1700	0.2160	0.3456	0.1853	0.0097										
$\tau = 24^\circ$															
27															
28															
$\tau = 30^\circ$															
29															
30															

TABLE II.- Continued

PURE PLANING PRESSURE DATA OBTAINED WITH A PLANING SURFACE

HAVING A 20° ANGLE OF DEAD RISE

LANGLEY TANK MODEL 301

(Density of tank water, 63.4 lb/cu ft)

Run	Pressure p/q at orifice number -														
	28	29	30	31	32	33	34	35	36	37	38	39	40	41	42
$\tau = 4^\circ$															
1			0.0098	0.0257	0.0323	0.0399	0.0492	0.0553	0.0695	0.0367	0.0055				
2			.0000	.0076	.0082	.0120	.0174	.0180	.0201	.0218	.0256	0.0254	0.0283	0.0332	0.0392
3			-.0022	.0055	.0049	.0082	.0132	.0121	.0132	.0126	.0154	.0132	.0154	.0132	.0132
$\tau = 6^\circ$															
4			0.0173	0.0455	0.0666	0.0932	0.1213	0.0244	0.0027						
5			.0119	.0303	.0439	.0580	.0753	.0910	.1202	0.0997	0.0081				
6			.0070	.0183	.0232	.0286	.0366	.0404	.0447	.0480	.0560	0.0582	0.0684	0.0905	0.1363
7			.0022	.0125	.0162	.0211	.0265	.0292	.0320	.0325	.0368	.0341	.0390	.0477	.0569
8			.0022	.0119	.0151	.0194	.0248	.0253	.0264	.0280	.0318	.0296	.0329	.0366	.0404
9			.0000	.0097	.0135	.0173	.0222	.0255	.0265	.0271	.0314	.0276	.0325	.0341	.0363
10			-.0022	.0081	.0092	.0146	.0179	.0179	.0195	.0195	.0233	.0195	.0233	.0206	.0206
$\tau = 9^\circ$															
11			0.0303	0.0791	0.1186	0.1717	0.2204	0.0108							
12			.0190	.0471	.0661	.0883	.1143	.1430	0.1950	0.2816	0.0097				
13			.0032	.0226	.0280	.0356	.0399	.0458	.0496	.0528	.0566	0.0560	0.0625	0.0695	0.0819
14			-.0043	.0108	.0152	.0217	.0173	.0292	.0325	.0325	.0357	.0325	.0357	.0363	.0406
$\tau = 12^\circ$															
15			0.0406	0.1120	0.1807	0.2745	0.3473	0.0070							
16			.0251	.0669	.0920	.1226	.1584	.2076	0.2843	0.4194	0.0056				
17			.0312	.0749	.0981	.1240	.1578	.2007	.2640	.3701	.0651				
18			.0167	.0418	.0766	.0627	.0739	.0836	.0878	.0934	.1017	0.1031	0.1143	0.1407	0.1951
19			.0025	.0272	.0396	.0495	.0619	.0644	.0718	.0768	.0817	.0842	.0917	.0991	.1239
20			-.0068	.0217	.0393	.0487	.0582	.0650	.0704	.0758	.0799	.0853	.0934	.1070	.1259
21			.0144	.0423	.0467	.0539	.0665	.0701	.0755	.0764	.0845	.0836	.0899	.0998	.1169
22	0.0753		.0000	.0201	.0251	.0301	.0377	.0402	.0502	.0477	.0502	.0502	.0527	.0527	.0552
23	-.0028		.0042	.0279	.0585	.0404	.0502	.0530	.0557	.0557	.0613	.0557	.0613	.0641	.0655
$\tau = 18^\circ$															
24			0.0672	0.1723	0.2884	0.3920	0.5672	0.0154							
25			.0359	.1035	.1318	.1780	.2180	.2663	0.3380	0.4497	0.4939	0.0648			
26			.0237	.0725	.1212	.1087	.1212	.1324	.1407	.1477	.1561	.1616	0.1714	0.1957	0.2230
$\tau = 24^\circ$															
27			0.1017	0.2466	0.3874	0.5[illegible]8	0.6215	-0.0014							
28			.0543	.1449	.2285	.2578	.3135	.3818	0.4724	0.6187	0.5978	-0.0069			
$\tau = 30^\circ$															
29			0.1667	0.3487	0.5112	0.6834	0.6722	0.0492							
30			.1045	.2313	.3066	.3721	.4403	.5225	0.6229	0.7371	0.5253	0.0507			

TABLE II.- Continued

PURE PLANING PRESSURE DATA OBTAINED WITH A PLANING SURFACE

HAVING A 20° ANGLE OF DEAD RISE

LANGLEY TANK MODEL 301

(Density of tank water, 63.4 lb/cu ft)

Run	Pressure p/q at orifice number -														
	43	44	45	46	47	48	49	50	51	52	53	54	55	56	57
$\tau = 4^\circ$															
1															
2	0.0484	0.0648	0.0332	0.0049											
3	.0165	.0148	.0165	.0170	0.0170	0.0165	0.0220	0.0236	0.0242	0.0308	0.0374	0.0429	0.0528	0.0429	0.0192
$\tau = 6^\circ$															
4															
5															
6	0.0045														
7	.0774	0.1083	0.1284	0.0146											
8	.0507	.0614	.0733	.0851	0.1024	0.1216	0.0102								
9	.0455	.0552	.0661	.0758	.0894	.1051	.0271								
10	.0233	.0233	.0244	.0244	.0255	.0255	.0309	0.0325	0.0341	0.0363	0.0401	0.0504	0.0601	0.0785	0.0937
$\tau = 9^\circ$															
11															
12															
13	0.1099	0.1601	0.2032	0.1848	0.0242										
14	.0406	.0406	.0428	.0439	.0444	0.0498	0.0504	0.0520	0.0563	0.0639	0.0715	0.0888	0.1208	0.1906	0.1625
$\tau = 12^\circ$															
15															
16															
17															
18	0.3233	0.0251													
19	.1734	.2973	0.3518	0.0012											
20	.1719	.2843	.3967	.0406											
21	.1393	.1870	.2328	.3155	0.2832	0.0234									
22	.0578	.0578	.0578	.0628	.0653	.0678	0.0728	0.0778	0.0979	0.0979	0.1080	0.1205	0.1581	0.2310	0.3013
23	.0683	.0697	.0669	.0752	.0766	.0836	.0850	.0906	.0975	.1087	.1157	.1338	.1756	.2801	.3163
$\tau = 18^\circ$															
24															
25															
26	0.2773	0.3971	0.5295	0.5295	0.0084										
$\tau = 24^\circ$															
27															
28															
$\tau = 30^\circ$															
29															
30															

TABLE IX.- Continued

PURE PLANING PRESSURE DATA OBTAINED WITH A PLANING SURFACE

HAVING A 20° ANGLE OF DEAD RISE

LANGLEY TANK MODEL 301

(Density of tank water, 63.4 lb/cu ft)

Run	Pressure p/q at orifice number -														
	58	59	60	61	62	63	64	65	66	67	68	69	70	71	72
$\tau = 4^\circ$															
1			-0.0295	0.0153	0.0246	0.0317	0.0356	0.0367	0.0372	0.0394	0.0427	0.0465	0.0465	0.0481	0.0388
2			------	.0114	.0120	.0158	.0180	.0180	.0185	.0196	.0234	.0294	.0299	------	.0343
3	0.0000		------	.0016	.0071	.0099	.0110	.0110	.0104	.0104	.0126	.0165	.0159	.0143	.0181
$\tau = 6^\circ$															
4			0.0152	0.0336	0.0504	0.0596	0.0699	0.0731	0.0825	0.0991	0.0390				
5			.0103	.0260	.0422	.0504	.0590	.0639	.0693	.0769	.0802	0.0948	0.1132	0.0049	
6			.0065	.0162	.0259	.0318	.0366	.0372	.0404	.0436	.0490	.0577	.0620	.0652	0.0744
7			.0032	.0108	.0211	.0244	.0282	.0282	.0287	.0320	.0352	.0406	.0422	.0417	.0520
8			.0043	.0119	.0210	.0237	.0253	.0253	.0259	.0280	.0313	.0377	.0377	.0366	.0431
9			.0000	.0081	.0179	.0217	.0255	.0249	.0255	.0260	.0265	.0287	.0287	.0325	.0406
10	0.1192	0.0867	-.0038	.0038	.0135	.0157	.0179	.0173	.0179	.0179	.0227	.0146	.0238	.0211	.0287
$\tau = 9^\circ$															
11			0.0081	0.0580	0.0872	0.1078	0.1338	0.1609	0.2188	-0.0027					
12			-.0027	.0450	.0677	.0845	.1018	------	.1300	.1495	0.1695	0.2676	-0.0011		
13			-.0151	.0210	.0345	.0399	.0453	.0447	.0501	.0539	.0571	.0560	.0679	0.0679	0.0771
14	0.0758		-.0217	.0108	.0233	.0265	.0309	.0282	.0320	.0330	.0363	.0379	.0341	.0390	.0460
$\tau = 12^\circ$															
15			0.0434	0.0980	0.1456	0.1849	0.2381	0.3361	0.0364						
16			.0320	.0975	.1296	.1533	.1616	.1839	.2118	0.2271	0.3428	0.0627			
17			.0321	.0722	.1008	.1257	.1507	.1775	.2051	.2435	.3103	.2604	0.0000		
18			.0195	.0446	.0627	.0723	.0808	.0878	.0920	.0962	.1045	.1157	.1240	0.1338	0.1491
19			.0050	.0248	.0471	.0545	.0644	.0718	.0743	.0793	.0842	.0917	.1016	.1016	.1115
20			-.0298	.0298	.0474	.0582	.0650	.0704	.0772	.0826	.0853	.0921	.0988	.1070	.1164
21			.0198	.0396	.0557	.0647	.0737	.0782	.0782	.0818	.0872	.0971	.1025	.1025	.1142
22	0.3590	0.0377	-.0126	.0151	.0301	.0351	.0502	.0502	.0502	.0527	.0552	.0603	.0603	.0603	.0678
23	.1198		.0098	.0279	.0418	.0488	.0557	.0585	.0585	.0599	.0655	.0711	.0752	.0697	.0766
$\tau = 18^\circ$															
24			0.0798	0.1681	0.2479	0.3207	0.4271	0.6540	0.0000						
25			.0552	.1131	.1573	.1951	.2304	.2690	.3187	0.3794	0.5008	0.5256	0.0414		
26			.0362	.0752	.1045	.1240	.1338	.1477	.1561	.1630	.1714	.1811	.1909	0.1993	0.2132
$\tau = 24^\circ$															
27			0.1184	0.2494	0.3707	0.4919	0.6842	0.2466	-0.0070						
28			.0766	.1658	.2327	.2857	.3386	.3971	.4696	0.5769	0.7720	0.0376			
$\tau = 30^\circ$															
29			0.1933	0.3711	0.5182	0.6694	0.8781	0.0588							
30			.1310	.2592	.3400	.4097	.4821	.5546	0.6466	0.7748	0.8626	0.0627			

TABLE II.- Continued

PURE PLANING PRESSURE DATA OBTAINED WITH A PLANING SURFACE

HAVING A 20° ANGLE OF DEAD RISE

LANGLEY TANK MODEL 301

(Density of tank water, 63.4 lb/cu ft)

Run	Pressure p/q at orifice number -														
	73	74	75	76	77	78	79	80	81	82	83	84	85	86	87
$\tau = 4^\circ$															
1	-0.0033														
2	.0370	0.0408	0.0452	0.0463	0.0446	0.0479	0.0520	0.0272							
3	.0170	.0163	.0187	.0220	.0214	.0209	.0242	.0192	0.0231	0.0280	0.0341	0.0368	0.0418	0.0451	0.0440
$\tau = 6^\circ$															
4															
5															
6	0.0825	0.0943	0.0577												
7	.0558	.0682	.0774	0.0888	0.0959	0.1105	0.0385	-0.0049							
8	.0463	.0539	.0652	.0749	.0776	.0819	.0873	.0915	0.0964	-0.0038					
9	.0428	.0498	.0585	.0682	.0709	.0758	.0818	.0850	.1083	-.0049					
10	.0260	.0287	.0314	.0320	.0309	.0341	.0368	.0320	.0336	.0385	0.0428	0.0477	0.0542	0.0590	0.0672
$\tau = 9^\circ$															
11															
12															
13	0.0878	0.1067	0.1326	0.1719	0.2064	0.2096	0.0226								
14	.0460	.0477	.0542	.0558	.0558	.0563	.0590	0.0558	0.0612	0.0661	0.0742	0.0829	0.0975	0.1164	0.1451
$\tau = 12^\circ$															
15															
16															
17															
18	0.1812	0.2411	0.3832	0.0014											
19	.1313	.1536	.2279	.3642	0.1561										
20	.1367	.1692	.2153	.3425	.3642	0.0000									
21	.1259	.1474	.1861	.2454	.2913	.4180	0.0126								
22	.0678	.0703	.0778	.0803	.0829	.0854	.0879	0.0854	0.0904	0.0979	0.1105	0.1180	0.1381	0.1607	0.1983
23	.0766	.0822	.0864	.0920	.0920	.0948	.0975	.0948	.0989	.1073	.1157	.1296	.1505	.1756	.2271
$\tau = 18^\circ$															
24															
25															
26	0.2452	0.2912	0.3734	0.5880	0.3316	0.0000									
$\tau = 24^\circ$															
27															
28															
$\tau = 30^\circ$															
29															
30															

TABLE II.- Concluded

PURE PLANING PRESSURE DATA OBTAINED WITH A PLANING SURFACE

HAVING A 20° ANGLE OF DEAD RISE

LANGLEY TANK MODEL 301

(Density of tank water, 63.4 lb/cu ft)

Run	Pressure p/q at orifice number -												
	88	89	90	91	92	93	94	95	96	97	98	99	100
$\tau = 4^\circ$													
1						0.0137				0.0066	0.0443		
2						-.0016	0.0196			-.0011	.0305	0.0457	
3	0.0495	0.0484	0.0440	0.0346	0.0286	-.0011	.0121	0.0154		-.0038	.0126	.0198	0.0429
$\tau = 6^\circ$													
4						0.0303				0.0146	0.1115		
5						.0146	0.0146			.0108	.0796		
6						.0065	.0426			.0054	.0404		
7						.0032	.0298	0.0325		.0022	.0303	0.0872	
8						.0043	.0275	.0707		.0022	.0280	.0610	
9						.0016	.0243	.0612		.0000	.0271	.0585	
10	0.0823	0.0829	0.0888	0.0980	0.0997	-.0032	.0157	.0222	0.0677	-.0038	.0195	.0287	0.0607
$\tau = 9^\circ$													
11						0.0406				0.0249	0.0108		
12						.0179	0.2130			.0179	.1435		
13						.0054	.0447	0.2020		.0172	.0496	0.1363	
14	0.2031	0.1896	0.1072	-0.0049		-.0043	.0265	.0352	0.1425	-.0022	.0320	.0477	0.1154
$\tau = 12^\circ$													
15						0.0518				0.0350	0.0028		
16						.0334	0.3860			.0279	.2270		
17						.0348	.3520			.0338	.2202		
18						.0139	.0780			.0153	.0892	0.2522	
19						-.0050	.0540	0.3442		.0000	.0696	.2427	
20						-.0095	.0582	.3602		-.0108	.0745	.2370	
21						.0162	.0656	.2041		.0162	.0782	.1771	
22	0.2812	0.3716	0.2009	-0.0050		-.0100	.0351	.0527	0.1506	-.0100	.0502	.0778	0.1581
23	.3372	.3470	-.0042			.0000	.0460	.0653	.1839	.0084	.0599	.0836	.1742
$\tau = 18^\circ$													
24						0.0756				0.0714			
25						.0400	0.3573			.0469	0.3214		
26						.0251	.1198	0.4194		.0307	.1450	0.3820	
$\tau = 24^\circ$													
27						0.1073				0.1031			
28						.0544	0.4710			.0641	0.4724		
$\tau = 30^\circ$													
29						0.1654				0.1695			
30						.1016	0.6006			.1198	0.6395		

TABLE III

PURE PLANING PRESSURE DATA OBTAINED WITH A PLANING

SURFACE HAVING A 20° ANGLE OF DEAD RISE

AND HORIZONTAL CHINE FLARE

LANGLEY TANK MODEL 301-A

(Density of tank water, 63.4 lb/cu ft)

Run	C_Δ	C_V	$\frac{l_m}{b}$	$\frac{l_p}{b}$	C_{L_b}	C_{L_S}	Pressure p/q at orifice number -								
							1	2	3	4	5	6	7	8	9
$\tau = 4^\circ$															
1	5.45	12.14	1.99	1.34	0.0740	0.0372	------	0.0161	------	0.0197	------	0.0227	------	0.0298	0.0310
2	8.39	12.26	4.22	2.76	.1116	.0264	------	.0088	------	.0105	------	0.0129	------	.0152	.0117
$\tau = 6^\circ$															
3	3.11	12.20	0.44	0.39	0.0418	0.0950	0.0655	0.0130	0.0094	0.0071	0.0047	0.0018			
4	5.28	12.23	.81	.57	.0706	.0873	.0252	.0470	.0911	.1293	.0270	.0094	0.0070	0.0018	
5	9.50	12.11	2.44	1.57	.1296	.0531	.0109	.0168	.0186	.0228	.0263	.0263	.0263	.0312	0.0300
6	14.61	12.20	5.06	3.19	.1964	.0388	.0106	.0177	.0148	.0195	.0201	.0218	.0207	.0230	.0207
$\tau = 9^\circ$															
7	9.54	12.23	0.92	0.65	0.1276	0.1387	------	0.0452	------	0.0881	------	0.2626	------	0.0129	0.0053
8	16.36	12.23	2.42	1.69	.2188	.0904	0.0260	.0295	------	.0372	0.0466	.0442	------	.0531	.0501
9	25.65	12.20	4.55	3.04	.3446	.0757	------	.0142	------	.0207	------	.0236	------	.0278	.0248
$\tau = 12^\circ$															
10	8.31	12.23	0.45	0.35	0.1112	0.2471	0.0827	0.2006	0.4013	0.0211	0.0246	0.0097	0.0053	0.0000	
11	13.63	12.20	.92	.66	.1832	.1991	.0419	.0669	.0856	.1142	.1606	.2944	.3220	.0277	0.0159
12	23.73	12.17	2.39	1.69	.3204	.1341	.0107	.0338	.0382	.0444	.0489	.0533	.0560	.0640	.0640
13	38.13	12.20	4.88	3.28	.5124	.1050	.0134	.0241	.0268	.0357	.0339	.0384	.0384	.0428	.0410
$\tau = 18^\circ$															
14	13.12	12.17	0.51	0.39	0.1772	0.3474	0.1022	0.1918	0.3402	0.5992	0.0303	0.0294	0.0252	0.0154	0.0126
15	20.96	12.20	.98	.67	.2816	.2873	.0638	.1039	------	.1585	.2004	.2715	.4446	.3890	.0346
16	40.13	12.20	2.61	1.74	.5392	.2066	.0319	.0529	------	.0711	.0775	.0857	.0893	.1003	.1003
$\tau = 24^\circ$															
17	17.04	12.20	0.55	0.38	0.2290	0.4164	0.1282	0.2340	0.3761	0.5948	0.2215	0.0279	0.0237	0.0237	0.0167
18	28.54	12.14	1.05	.72	.3872	.3688	.0774	.1323	.1646	.2012	.2435	.2969	.3898	.4559	.3293
$\tau = 28^\circ$															
19	32.46	12.20	1.15	0.70	0.4362	0.3793	0.1003	0.1644	0.2076	0.2549	0.2981	0.3580	0.4430	0.5795	0.5084
$\tau = 30^\circ$															
20	18.74	12.20	0.50	0.35	0.2518	0.5036	0.1797	0.3120	0.4569	0.6101	0.2368	0.0376	0.0348	0.0279	0.0223
21	32.46	12.26	1.06	.66	.4320	.4075	.1117	.1862	.2344	.2841	.3351	.4082	.5130	.6109	.2730

TABLE III.- Continued

PURE PLANING PRESSURE DATA OBTAINED WITH A PLANING

SURFACE HAVING A 20° ANGLE OF DEAD RISE

AND HORIZONTAL CHINE FLARE

LANGLEY TANK MODEL 301-A

(Density of tank water, 63.4 lb/cu ft)

Run	Pressure p/q at orifice number -												
	10	11	12	13	14	15	16	17	18	19	20	21	22
$\tau = 4^\circ$													
1	0.0835	0.0465											
2	.0111	.0134	0.0146	0.0181	0.0140	0.0164	0.0146	0.0173	0.0175	0.0222	0.0351	0.1053	0.0251
$\tau = 6^\circ$													
3													
4													
5	0.0330	0.0454	0.1069	0.0318	0.0168	0.0092	-0.0018						
6	.0189	.0207	.0236	.0260	.0254	.0248	.0242	0.0260	0.0325	0.0319	0.0331	0.0396	0.0402
$\tau = 9^\circ$													
7													
8	0.0555	0.0661	0.0891	0.1923	0.4112	0.0419	0.0188	0.0170	0.0018				
9	.0242	.0289	.0313	.0348	.0319	.0337	.0325	.0372	.0378	0.0461	0.0496	0.0620	0.0732
$\tau = 12^\circ$													
10													
11													
12	0.0693	0.0853	------	0.1759	0.2950	0.2612	0.0293	0.0231	0.0089				
13	.0410	.0455	------	.0517	.0500	.0500	.0508	.0544	.0553	0.0624	0.0660	0.0740	0.0821
$\tau = 18^\circ$													
14													
15	0.0146	0.0119											
16	.1006	.1294	0.1522	0.1896	0.2188	0.2826	0.4357	0.5214	0.0419	0.0209	0.0127	0.0036	
$\tau = 24^\circ$													
17													
18	0.0183												
$\tau = 28^\circ$													
19	0.0313	0.0313	0.0195										
$\tau = 30^\circ$													
20													
21	0.0307	0.0276	0.0179										

TABLE III.- Continued

PURE PLANING PRESSURE DATA OBTAINED WITH A PLANING

SURFACE HAVING A 20° ANGLE OF DEAD RISE

AND HORIZONTAL CHINE FLARE

LANGLEY TANK MODEL 301-A

(Density of tank water, 63.4 lb/cu ft)

Run	Pressure p/q at orifice number -												
	23	24	25	26	27	28	29	30	31	32	33	34	35
$\tau = 4^\circ$													
1								-0.0024	0.0143	0.0167	0.0286	0.0251	0.0227
2	0.0047							.0035	.0099	.0099	.0205	.0152	.0129
$\tau = 6^\circ$													
3								0.0254	0.0738	0.1128	0.1205	0.0071	0.0030
4								.0070	.0441	.0629	.0870	.1075	.1322
5								.0000	.0186	.0228	.0288	.0300	.0324
6	0.0472	0.0756	0.1677	0.0827	0.0201	0.0148	0.0065	.0018	.0177	.0201	.0236	.0260	.0260
$\tau = 9^\circ$													
7								0.0164	0.0558	0.0770	0.1022	0.1287	0.1715
8								.0088	.0336	------	.0507	.0543	.0555
9	0.1364	0.1783	0.0413	0.0106	0.0065	0.0024	-0.0012	-.0024	.0189	.0254	.0325	.0348	.0342
$\tau = 12^\circ$													
10								0.0546	0.1496	0.2394	0.3749	0.1082	0.0035
11								.0303	.0999	.1097	.1436	.1784	.2337
12								.0098	.0409	.0533	.0720	.0720	.0764
13	0.0946	0.1463	0.1463	0.1900	0.3033	0.4050	0.0285	.0036	.0321	.0410	.0598	.0571	.0598
$\tau = 18^\circ$													
14								0.1526	0.2002	0.3220	0.4746	0.6146	0.0098
15								.0510	.1257	.1649	.2077	.2551	.3207
16								.0228	.0702	.0930	.1167	.1203	.1385
$\tau = 24^\circ$													
17								0.1198	0.2730	0.4179	0.5906	0.6700	0.0975
18								.0718	.1689	.2406	.2899	.3377	.4025
$\tau = 28^\circ$													
19								0.0989	0.2159	0.3023	0.3580	0.4179	0.4848
$\tau = 30^\circ$													
20								0.1741	0.3761	0.5461	0.7076	0.6617	0.0641
21								.1117	.2441	.3337	.3985	.4661	.5516

TABLE III.- Continued

PURE PLANING PRESSURE DATA OBTAINED WITH A PLANING

SURFACE HAVING A 20° ANGLE OF DEAD RISE

AND HORIZONTAL CHINE FLARE

LANGLEY TANK MODEL 301-A

(Density of tank water, 63.4 lb/cu ft)

Run	Pressure p/q at orifice number -												
	36	37	38	39	40	41	42	43	44	45	46	47	48
$\tau = 4^\circ$													
1	0.0328	0.0370	0.0453	0.0489	0.0597	0.0716	0.0191						
2	.0181	.0211	.0199	.0175	.0146	.0181	.0181	0.0181	0.0228	0.0228	0.0187	0.0246	0.0304
$\tau = 6^\circ$													
3													
4	0.0065												
5	.0414	0.0426	0.0474	0.0474	0.0564	0.0798	0.1164	0.1188	0.0046				
6	.0301	.0301	.0307	.0289	.0278	.0307	.0313	.0319	.0360	0.0348	0.0301	0.0348	0.0384
$\tau = 9^\circ$													
7	0.2227	0.0088											
8	.0667	.0702	0.0767	0.0791	0.0885	0.1127	0.1569	0.2732	0.2620	0.0112			
9	.0437	.0425	.0437	.0425	.0419	.0466	.0484	.0531	.0555	.0555	0.0514	0.0579	0.0638
$\tau = 12^\circ$													
10													
11	0.4710	0.0054											
12	.0889	.0942	0.1004	0.1031	0.1173	0.1457	0.1937	0.3376	0.4274	0.0480	0.0000		
13	.0660	.0678	.0714	.0678	.0714	.0758	.0767	.0776	.0838	.0838	.0812	0.0874	0.0910
$\tau = 18^\circ$													
14													
15	0.5885	0.2870	0.0055										
16	.1486	.1568	.1641	0.1705	0.1878	0.2151	0.2689	0.3509	0.4421	0.5943	0.4011	0.0091	
$\tau = 24^\circ$													
17													
18	0.6220	0.7641	0.0802	0.0070									
$\tau = 28^\circ$													
19	0.6923	0.7662	0.2633	0.0223									
$\tau = 30^\circ$													
20	0.0111												
21	.7557	0.6330	0.0786	0.0220									

TABLE III.- Continued

PURE PLANING PRESSURE DATA OBTAINED WITH A PLANING

SURFACE HAVING A 20° ANGLE OF DEAD RISE

AND HORIZONTAL CHINE FLARE

LANGLEY TANK MODEL 301-A

(Density of tank water, 63.4 lb/cu ft)

Run	Pressure p/q at orifice number -												
	49	50	51	52	53	54	55	56	57	58	59	60	61
$\tau = 4^\circ$													
1												-0.0048	0.0084
2	0.0374	0.0532	0.0655	0.0702	0.0129							-.0064	.0058
$\tau = 6^\circ$													
3												0.0112	0.0396
4												.0065	.0323
5												.0000	.0134
6	0.0384	0.0443	0.0449	0.0579	0.0732	0.1081	0.1683	0.1122	0.0248	0.0053		-.0012	.0136
$\tau = 9^\circ$													
7												0.0129	0.0458
8												.0065	.0171
9	0.0673	0.0791	0.0945	0.1264	0.1907	0.1848	0.0071					-.0047	.0159
$\tau = 12^\circ$													
10												0.0449	0.1082
11												.0268	.0526
12												.0071	.0391
13	0.0946	0.1017	0.1124	0.1302	0.1516	0.1909	0.2765	0.3559	0.4103	0.0125		.0036	.0285
$\tau = 18^\circ$													
14												0.0672	0.1806
15												.0519	.1203
16												.0283	.0930
$\tau = 24^\circ$													
17												0.1100	0.2661
18												.0673	.1773
$\tau = 28^\circ$													
19												0.1184	0.2298
$\tau = 30^\circ$													
20												0.1936	0.3691
21												.1365	.2606

TABLE III.- Continued

PURE PLANING PRESSURE DATA OBTAINED WITH A PLANING

SURFACE HAVING A 20° ANGLE OF DEAD RISE

AND HORIZONTAL CHINE FLARE

LANGLEY TANK MODEL 301-A

(Density of tank water, 63.4 lb/cu ft)

Run	Pressure p/q at orifice number -												
	62	63	64	65	66	67	68	69	70	71	72	73	74
$\tau = 4^\circ$													
1	0.0143	0.0161	0.0227	0.0227	0.0274	0.0274	0.0334	0.0370	0.0370	0.0424	0.0429	0.0489	0.0477
2	.0088	.0094	.0170	.0140	.0170	.0140	.0175	.0175	.0140	.0175	.0170	.0199	.0199
$\tau = 6^\circ$													
3	0.0543	0.0650	0.0774	0.0856	0.1087	0.0283							
4	.0470	.0576	.0723	.0752	.0817	.0858	0.0916	0.1116	0.0123				
5	.0204	.0217	.0304	.0304	.0354	.0354	.0416	.0448	.0450	0.0500	0.0542	0.0696	0.0814
6	.0183	.0201	.0266	.0254	.0283	.0272	.0301	.0313	.0289	.0295	.0295	.0342	.0342
$\tau = 9^\circ$													
7	0.0670	0.0864	0.1105	0.1263	0.1445	0.1663	0.1939	0.1886	0.0018				
8	.0407	.0454	.0549	.0578	.0625	.0643	.0720	.0755	.0761	0.0820	0.0885	0.1086	0.1339
9	.0242	.0295	.0384	.0384	.0425	.0413	.0466	.0484	.0466	.0490	.0490	.0555	.0555
$\tau = 12^\circ$													
10	0.1602	0.2077	0.2763	0.4206	-0.0035								
11	.1017	.1311	.1623	.1900	.2284	0.2721	0.3604	0.0856					
12	.0551	.0640	.0764	.0800	.0862	.0897	.0977	.1031	0.1057	0.0977	0.1057	0.1493	0.1839
13	.0410	.0491	.0598	.0607	.0705	.0687	.0714	.0731	.0714	.0776	.0776	.0838	.0847
$\tau = 18^\circ$													
14	0.2660	0.3486	0.4690	0.7196	0.0042								
15	.1740	.2114	.2523	.2979	.3580	0.4355	0.6040	0.0947	-0.0036				
16	.1021	.1185	.1349	.1431	.1540	.1622	.1723	.1787	.1841	0.1960	0.2060	0.2361	0.2744
$\tau = 24^\circ$													
17	0.3817	0.5001	0.6826	0.5001	0.0056								
18	.2420	.2941	.3476	.4025	.4714	0.5629	0.7163	0.7754	0.0000				
$\tau = 28^\circ$													
19	0.3037	0.3691	0.4304	0.4917	0.5697	0.6686	0.8024	0.7174	0.0167				
$\tau = 30^\circ$													
20	0.5182	0.6686	0.8260	0.2131	0.0070								
21	.3475	.4151	.4826	.5571	.6481	0.7626	0.8398	0.2000	0.0124				

TABLE III.- Continued

PURE PLANING PRESSURE DATA OBTAINED WITH A PLANING SURFACE HAVING A 20° ANGLE OF DEAD RISE AND HORIZONTAL CHINE FLARE

LANGLEY TANK MODEL 301-A

(Density of tank water, 63.4 lb/cu ft)

Run	Pressure p/q at orifice number -												
	75	76	77	78	79	80	81	82	83	84	85	86	87
$\tau = 4^\circ$													
1	0.0465	0.0495	0.0251	-0.0036									
2	.0222	.0246	.0228	.0251	0.0275	0.0304	0.0345	0.0392	0.0462	0.0462	0.0450	0.0462	0.0339
$\tau = 6^\circ$													
3													
4													
5	0.0880	0.1020	0.1146	0.0000									
6	.0354	.0366	.0354	.0360	0.0372	0.0384	0.0419	0.0443	0.0514	0.0585	0.0673	0.0839	0.0980
$\tau = 9^\circ$													
7													
8	0.1693	0.2242	0.2549	0.0000									
9	.0591	.0626	.0608	.0655	0.0691	0.0685	0.0732	0.0827	0.0980	0.1181	0.1476	0.1907	0.1317
$\tau = 12^\circ$													
10													
11													
12	0.2443	0.3785	0.1928	-0.0053									
13	.0863	.0919	.0928	.0946	0.0963	0.0990	0.1026	0.1088	0.1213	0.1320	0.1472	0.1873	0.2337
$\tau = 18^\circ$													
14													
15													
16	0.3445	0.4776	0.6326	0.0966									
$\tau = 24^\circ$													
17													
18													
$\tau = 28^\circ$													
19													
$\tau = 30^\circ$													
20													
21													

TABLE III.- Concluded

PURE PLANING PRESSURE DATA OBTAINED WITH A PLANING SURFACE HAVING A 20° ANGLE OF DEAD RISE AND HORIZONTAL CHINE FLARE

LANGLEY TANK MODEL 301-A

(Density of tank water, 63.4 lb/cu ft)

Run	Pressure p/q at orifice number -												
	88	89	90	91	92	93	94	95	96	97	98	99	100
$\tau = 4^\circ$													
1						0.0024	0.0328			0.0072	0.0310	0.0525	
2	-0.0012					-.0018	.0134	0.0288		-.0041	.0409	.0322	
$\tau = 6^\circ$													
3						0.0821				0.0142			
4						.0112	0.0000			.0088	0.1235		
5						.0036	.0354	0.0132		-.0024	.0400	0.1044	
6	0.1039	0.1128	0.0785	0.0230	0.0000	.0035	.0236	.0354	0.1004	.0000	.0295	.0319	0.1087
$\tau = 9^\circ$													
7						0.0223	0.0229			0.0147	0.2069		
8						.0117	.0623	0.3115		.0070	.0688	0.1880	
9	-0.0071					-.0012	.0366	.0555	0.0071	-.0059	.0425	.0532	0.1246
$\tau = 12^\circ$													
10						0.0695				0.0440			
11						.0371	0.0530			.0265	0.3280		
12						.0124	.0818	0.4900		.0089	.0916	0.2668	
13	0.3060	0.4014	0.0384			.0062	.0584	.0814	0.3200	.0053	.0672	.0822	0.2440
$\tau = 18^\circ$													
14						0.0980				0.0798			
15						.0601	0.7050			.0501	0.5260		
16						.0283	.1421	0.3670		.0283	.1585	0.3455	
$\tau = 24^\circ$													
17						0.1351				0.1212			
18						.0760	0.6740			.0774	0.5865		
$\tau = 28^\circ$													
19						0.1060	0.7110			0.1073	0.6760		
$\tau = 30^\circ$													
20						0.1910				0.1796			
21						.1200	0.7656			.1228	0.7573		

TABLE IV

PURE PLANING PRESSURE DATA OBTAINED WITH A PLANING

SURFACE HAVING A 40° ANGLE OF DEAD RISE

LANGLEY TANK MODEL 302

(Density of tank water, 63.4 lb/cu ft)

Run	C_Δ	C_V	$\frac{l_m}{b}$	$\frac{l_p}{b}$	C_{L_b}	C_{L_S}	Pressure p/q at orifice number -					
							1	2	3	4	5	6
$\tau = 9^\circ$												
1	4.26	12.29	1.00	0.81	0.0564	0.0564	0.0234	0.0375	0.0245	0.0049		
2	8.31	12.26	2.17	1.48	.1106	.0510	.0027	.0082	.0197	.0191	0.0213	0.0224
3	9.16	12.26	2.50	1.66	.1218	.0487	.0000	.0049	.0137	.0148	.0169	.0180
4	9.37	12.23	2.52	1.67	.1252	.0497	-.0016	.0033	.0121	.0132	.0154	.0165
5	9.37	12.32	2.50	1.65	.1234	.0494	.0016	.0065	.0162	.0168	.0184	.0195
6	14.91	12.23	4.70	2.84	.1994	.0424	-.0071	-.0027	.0044	.0055	.0066	.0066
$\tau = 12^\circ$												
7	3.58	12.20	0.51	0.52	0.0482	0.0945	0.0144	0.0155	0.0138	0.0088	0.0055	0.0011
8	6.39	12.20	1.06	.79	.0858	.0809	.0171	.0353	.0646	.0668	.0734	.0304
9	13.63	12.20	2.38	1.56	.1832	.0770	.0017	.0110	.0171	.0171	.0215	.0221
10	24.15	12.23	4.88	3.11	.3230	.0662	-.0115	-.0055	.0000	.0000	.0022	.0022
$\tau = 18^\circ$												
11	6.30	12.20	0.51	0.44	0.0846	0.1659	0.0731	0.0814	0.0069			
12	11.16	12.20	.98	.69	.1500	.1531	.0229	.0511	.0662	0.0938	0.1187	0.0883
13	15.42	12.99	1.43	.94	.1828	.1278	.0097	.0280	.0329	.0438	.0523	.0621
14	23.94	12.20	2.50	1.49	.3216	.1286	.0097	.0262	.0304	.0331	.0386	.0400
$\tau = 24^\circ$												
15	8.73	12.20	0.52	0.40	0.1174	0.2258	0.0814	0.1490	0.1145	0.0069		
16	15.68	12.20	1.01	.67	.2106	.2085	.0235	.0607	.0787	.1021	0.1325	0.1656
17	33.87	12.23	2.46	1.52	.4528	.1841	.0124	.0343	.0426	.0481	.0508	.0549
$\tau = 30^\circ$												
18	10.31	12.17	0.51	0.34	0.1392	0.2729	0.0929	0.1706	0.1900	0.0444	-0.0028	
19	19.60	12.14	1.02	.64	.2660	.2608	.0335	.0725	.0937	.1227	.1478	0.1827

TABLE IV.- Continued

PURE PLANING PRESSURE DATA OBTAINED WITH A PLANING

SURFACE HAVING A 40° ANGLE OF DEAD RISE

LANGLEY TANK MODEL 302

(Density of tank water, 63.4 lb/cu ft)

Run	Pressure p/q at orifice number -										
	7	8	9	10	11	12	13	14	15	16	17
$\tau = 9^\circ$											
1											
2	0.0251	0.0164	0.0361	0.0497	0.0465	0.0344	0.0115	0.0044			
3	.0197	.0246	.0257	.0328	.0366	.0454	.0525	.0399	0.0169	0.0049	
4	.0187	.0231	.0242	.0307	.0346	.0439	.0515	.0407	.0159		
5	.0216	.0254	.0276	.0341	.0368	.0460	.0541	.0422	.0179	.0060	
6	.0071	.0126	.0099	.0104	.0099	.0126	.0143	.0126	.0170	.0165	0.0143
$\tau = 12^\circ$											
7											
8	0.0066										
9	.0232	0.0326	0.0331	0.0375	0.0320	0.0541	0.0675	0.0767	0.0718	0.0193	0.0077
10	.0038	.0077	.0077	.0082	.0396	.0110	.0132	.0121	.0159	.0154	.0132
$\tau = 18^\circ$											
11											
12	0.0041										
13	.0767	0.0986	0.1229	0.0012							
14	.0442	.0497	.0524	.0580	------	0.0731	0.0800	0.0856	0.1063	0.1283	0.1435
$\tau = 24^\circ$											
15											
16	0.1187	0.0041									
17	.0618	.0659	0.0742	0.0838	0.0879	0.0948	0.1058	0.1222	0.1442	0.1731	0.1909
$\tau = 30^\circ$											
18											
19	0.2148	0.1199	0.0000								

TABLE IV.- Continued

PURE PLANING PRESSURE DATA OBTAINED WITH A PLANING

SURFACE HAVING A 40° ANGLE OF DEAD RISE

LANGLEY TANK MODEL 302

(Density of tank water, 63.4 lb/cu ft)

Run	Pressure p/q at orifice number -										
	18	19	20	21	22	23	24	25	26	27	28
$\tau = 9^\circ$											
1											
2											
3											
4											
5											
6	0.0181	0.0192	0.0214	0.0341	0.0445	0.0472	0.0242	0.0060			
$\tau = 12^\circ$											
7											
8											
9											
10	0.0154	0.0181	0.0192	0.0258	0.0308	0.0357	0.0401	0.0533	0.0654	0.0621	0.0214
$\tau = 18^\circ$											
11											
12											
13											
14	0.0386										
$\tau = 24^\circ$											
15											
16											
17	0.0563										
$\tau = 30^\circ$											
18											
19											

TABLE IV.- Continued

PURE PLANING PRESSURE DATA OBTAINED WITH A PLANING

SURFACE HAVING A 40° ANGLE OF DEAD RISE

LANGLEY TANK MODEL 302

(Density of tank water, 63.4 lb/cu ft)

Run	Pressure p/q at orifice number										
	29	30	31	32	33	34	35	36	37	38	39
$\tau = 9^\circ$											
1			0.0033	0.0239	0.0555	0.0626	0.0702	0.0729	0.0762	0.0419	0.0092
2			-.0016	.0109	.0350	.0186	.0454	.0465	.0508	.0552	.0590
3			-.0038	.0087	.0306	.0350	.0399	.0399	.0432	.0465	.0497
4			-.0049	.0077	.0286	.0324	.0379	.0379	.0418	.0450	.0472
5			-.0027	.0097	.0319	.0352	.0411	.0411	.0444	.0476	.0498
6			-.0110	.0000	.0187	.0214	.0258	.0247	.0264	.0280	.0297
$\tau = 12^\circ$											
7			0.0144	0.0530	0.0994	0.1038	0.0469	0.0293	0.0127	-0.0028	
8			.0105	.0381	.0778	.0894	.1021	.1104	.1204	.1270	0.0867
9			.0000	.0165	.0453	.0519	.0552	.0596	.0618	.0679	.0734
10	-0.0049		-.0176	-.0022	.0231	.0269	.0319	.0319	.0346	.0368	.0385
$\tau = 18^\circ$											
11			0.0386	0.1104	0.2084	0.1877	0.0083				
12			.0235	.0745	.1408	.1656	.1918	0.2194	0.2429	0.1352	0.0055
13			.0110	.0511	.0925	.1071	.1217	.1363	.1521	.1692	.1886
14			.0110	.0414	.0842	.0938	.1007	.1076	.1118	.1187	.1283
$\tau = 24^\circ$											
15			0.0718	0.1711	0.3091	0.2843	0.0193				
16			.0373	.1104	.2001	.2305	.2719	0.3133	0.3478	0.2291	0.0041
17			.0233	.0755	.1277	.1456	.1525	.1621	.1703	.1799	.1882
$\tau = 30^\circ$											
18			0.1068	0.2344	0.4022	0.3398	0.0166				
19			.0628	.1548	.2636	.3026	.3472	0.3946	0.4393	0.3877	0.0251

TABLE IV.- Continued

PURE PLANING PRESSURE DATA OBTAINED WITH A PLANING

SURFACE HAVING A 40° ANGLE OF DEAD RISE

LANGLEY TANK MODEL 302

(Density of tank water, 63.4 lb/cu ft)

Run	Pressure p/q at orifice number -										
	40	41	42	43	44	45	46	47	48	49	50
$\tau = 9^\circ$											
1											
2	0.0787	0.0383	0.0131	0.0071							
3	.0683	.0809	.0809	.0558	0.0115						
4	.0681	.0791	.0813	.0571	.0099						
5	.0693	.0806	.0828	.0601	.0124						
6	.0368	.0368	.0418	.0445	.0434	0.0461	0.0544	0.0670	0.0813	0.0275	0.0049
$\tau = 12^\circ$											
7											
8											
9	0.1028	0.1333	0.1293	0.0447	0.0089						
10	.0478	.0494	.0549	.0582	.0566	0.0571	0.0648	0.0791	0.1093	0.1242	0.1192
$\tau = 18^\circ$											
11											
12											
13	0.0049										
14	.1697	0.2401	0.2705	0.2332	0.0138						
$\tau = 24^\circ$											
15											
16											
17	0.2568	0.3736	0.3626	0.0357							
$\tau = 30^\circ$											
18											
19											

TABLE IV.- Continued

PURE PLANING PRESSURE DATA OBTAINED WITH A PLANING

SURFACE HAVING A 40° ANGLE OF DEAD RISE

LANGLEY TANK MODEL 302

(Density of tank water, 63.4 lb/cu ft)

Run	Pressure p/q at orifice number -										
	51	52	53	54	55	56	57	58	59	60	61
$\tau = 9^\circ$											
1			0.0005	0.0288	0.0451	0.0522	0.0604	0.0636	0.0658	0.0685	0.0713
2			.0000	.0262	.0372	.0399	.0503	.0541	.0569	.0612	.0651
3			-.0049	.0208	.0328	.0388	.0459	.0487	.0519	.0552	.0590
4			-.0060	.0187	.0313	.0374	.0439	.0472	.0494	.0533	.0571
5			-.0038	.0216	.0346	.0401	.0471	.0498	.0525	.0563	.0601
6			-.0121	.0121	.0231	.0269	.0335	.0352	.0374	.0390	.0418
$\tau = 12^\circ$											
7			0.0110	0.0508	0.0734	0.0861	0.0961	0.1038	0.1082	0.1181	0.1281
8			.0116	.0491	.0674	.0784	.0911	.0983	.1032	.1110	.1165
9			.0000	.0341	.0442	.0608	.0691	.0729	.0806	.0817	.0861
10	0.0461	0.0055	-.0143	.0165	.0313	.0379	.0456	.0483	.0511	.0549	.0577
$\tau = 18^\circ$											
11			0.0428	0.1145	0.1587	0.1877	0.2167	0.2415	0.2746	0.1546	-0.0014
12			.0359	.0980	.1339	.1573	.1794	.1973	.2167	.2346	.2539
13			.0243	.0755	.1010	.1193	.1339	.1436	.1570	.1704	.1838
14			.0193	.0731	.0966	.1132	.1256	.1339	.1435	.1463	.1546
$\tau = 24^\circ$											
15			0.0938	0.1987	0.2636	0.3133	0.3629	0.4168	0.3809	0.0000	
16			.0704	.1559	.2070	.2456	.2746	.3050	.3367	.3726	0.4154
17			.0522	.1195	.1580	.1772	.1992	.2074	.2198	.2321	.2417
$\tau = 30^\circ$											
18			0.1512	0.2899	0.3787	0.4494	0.5215	0.6200	0.0055		
19			.1255	.2273	.2942	.3430	.3807	.4184	.4602	0.5160	0.5717

TABLE IV.- Continued

PURE PLANING PRESSURE DATA OBTAINED WITH A PLANING

SURFACE HAVING A 40° ANGLE OF DEAD RISE

LANGLEY TANK MODEL 302

(Density of tank water, 63.4 lb/cu ft)

Run	Pressure p/q at orifice number -										
	62	63	64	65	66	67	68	69	70	71	72
$\tau = 9^\circ$											
1	0.0718	0.0734	0.0745	0.0772	0.0827	0.0180					
2	.0672	.0694	.0716	.0749	.0787	.0804	0.0820	0.0836	0.0847	0.0957	0.0820
3	.0596	.0618	.0634	.0672	.0700	.0705	.0722	.0738	.0738	.0760	.0782
4	.0577	.0599	.0615	.0659	.0681	.0698	.0709	.0725	.0731	.0753	.0769
5	.0606	.0628	.0650	.0682	.0709	.0714	.0720	.0736	.0742	.0758	.0779
6	.0418	.0428	.0428	.0450	.0472	.0472	.0483	.0489	.0489	.0505	.0522
$\tau = 12^\circ$											
7	0.0618	0.0033									
8	.1176	.1242	0.1303	0.1369	0.1469	0.0000					
9	.0916	.0940	.0966	.1020	.1071	.1076	0.1137	0.1181	0.1198	0.1259	0.1363
10	.0577	.0593	.0604	.0621	.0654	.0659	.0659	.0681	.0681	.0709	.0731
$\tau = 18^\circ$											
11											
12	0.2746	0.3105	0.0055								
13	.1947	.2093	.2239	0.2410	0.2653	0.2702	0.0000				
14	.1656	.1684	.1739	.1835	.1904	.1987	.2139	0.2263	0.2332	0.2470	0.2843
$\tau = 24^\circ$											
15											
16	0.4706	0.0704									
17	.2500	.2596	0.2747	0.2843	0.2994	0.3132	0.3296	0.3489	0.3750	0.4052	0.4903
$\tau = 30^\circ$											
18											
19	0.6554	0.0014									

TABLE IV.- Continued

PURE PLANING PRESSURE DATA OBTAINED WITH A PLANING

SURFACE HAVING A 40° ANGLE OF DEAD RISE

LANGLEY TANK MODEL 302

(Density of tank water, 63.4 lb/cu ft)

Run	Pressure p/q at orifice number -										
	73	74	75	76	77	78	79	80	81	82	83
$\tau = 9^\circ$											
1											
2	0.0804	0.0825	0.0825	0.0082							
3	.0771	.0771	.0787	.0804	0.0776	0.0410	-0.0027				
4	.0753	.0753	.0769	.0780	.0797	.0439	-.0044				
5	.0774	.0779	.0785	.0801	.0828	.0346	-.0016				
6	.0527	.0544	.0560	.0577	.0599	.0621	.0632	0.0648	0.0654	0.0681	0.0736
$\tau = 12^\circ$											
7											
8											
9	0.1386	0.1435	0.1479	0.0166							
10	.0731	.0747	.0764	.0780	0.0786	0.0802	0.0808	0.0835	0.0846	0.0923	0.1077
$\tau = 18^\circ$											
11											
12											
13											
14	0.3008	0.3367	0.0041								
$\tau = 24^\circ$											
15											
16											
17	0.3873	0.0055									
$\tau = 30^\circ$											
18											
19											

TABLE IV.- Continued

PURE PLANING PRESSURE DATA OBTAINED WITH A PLANING

SURFACE HAVING A 40° ANGLE OF DEAD RISE

LANGLEY TANK MODEL 302

(Density of tank water, 63.4 lb/cu ft)

Run	Pressure p/q at orifice number -								
	84	85	86	87	88	89	90	91	92
$\tau = 9^\circ$									
1									
2									
3									
4									
5									
6	0.0769	0.0791	0.0703	-0.0027					
$\tau = 12^\circ$									
7									
8									
9									
10	0.1280	0.1329	0.1423	0.0533	-0.0077				
$\tau = 18^\circ$									
11									
12									
13									
14									
$\tau = 24^\circ$									
15									
16									
17									
$\tau = 30^\circ$									
18									
19									

TABLE IV.- Concluded

PURE PLANING PRESSURE DATA OBTAINED WITH A PLANING

SURFACE HAVING A 40° ANGLE OF DEAD RISE

LANGLEY TANK MODEL 302

(Density of tank water, 63.4 lb/cu ft)

Run	Pressure p/q at orifice number -							
	93	94	95	96	97	98	99	100
$\tau = 9^\circ$								
1	0.0076				-0.0022	0.0669		
2	.0000	0.0465			-.0038	.0530	0.0792	
3	-.0049	.0377	0.0158		-.0077	.0465	.0721	
4	-.0077	.0357	.0143		-.0104	.0440	.0709	
5	.0038	.0390	.0168		-.0065	.0477	.0736	
6	-.0132	.0198	.0324	0.0082	-.0159	.0308	.0429	0.0725
$\tau = 12^\circ$								
7	0.0276				0.0055	0.0596		
8	.0127	0.0563			.0066	.1066		
9	.0011	.0530	0.0364		-.0044	.0696	0.1203	
10	-.0148	.0242	.0418	0.0114	-.0176	.0423	.0593	0.1059
$\tau = 18^\circ$								
11	0.0552				0.0317			
12	.0221	0.0414			.0201	0.2250		
13	.0097	.1460			.0134	.1558		
14	.0083	.0897	0.2429		.0124	.1283	0.2346	
$\tau = 24^\circ$								
15	0.0814				0.0690			
16	.0345	0.1960			.0428	0.3464		
17	.0151	.1360	0.3145		.0288	.1689	0.3750	
$\tau = 30^\circ$								
18	0.1221				0.1082			
19	.0586	0.3698			.0753	0.4602		

TABLE V

PURE PLANING PRESSURE DATA OBTAINED WITH A PLANING

SURFACE HAVING A 40° ANGLE OF DEAD RISE

AND HORIZONTAL CHINE FLARE

LANGLEY TANK MODEL 302-A

(Density of tank water, 63.4 lb/cu ft)

Run	C_Δ	C_∇	$\frac{l_m}{b}$	$\frac{l_p}{b}$	C_{L_b}	C_{L_S}	Pressure p/q at orifice number -								
							1	2	3	4	5	6	7	8	9
$\tau = 9°$															
1	6.71	12.20	0.94	0.67	0.0902	0.0960	0.0408	0.0883	0.1424	0.2120	0.0574	0.0243	0.0215	0.0193	0.0050
2	12.78	12.17	2.32	1.45	.1726	.0744	.0166	.0377	.0416	.0444	.0466	.0461	.0566	.0577	.0616
3	12.78	12.23	2.27	1.54	.1708	.0752	.0165	.0392	.0423	.0423	.0464	.0464	.0557	.0567	.0598
4	17.89	12.20	3.77	2.34	.2404	.0638	.0093	.0269	.0301	.0301	.0311	.0311	.0373	.0352	.0332
5	21.94	12.20	4.95	3.10	.2948	.0596	.0039	.0210	.0232	.0248	.0248	.0221	.0282	.0282	.0276
$\tau = 12°$															
6	5.64	12.23	0.55	0.43	0.0754	0.1371	0.1806	0.1797	0.0434	0.0302	0.0346	0.0143	0.0016		
7	9.69	12.08	.94	.62	.1328	.1413	.0451	.0890	.1228	.1933	.3088	.0744	.0366	0.0338	0.0152
8	9.69	12.26	.94	.60	.1290	.1372	.0459	.0891	.1241	.1995	.3011	.0656	.0344	.0301	.0109
9	19.60	12.14	2.49	1.55	.2660	.1068	.0168	.0398	.0461	.0482	.0524	.0524	.0628	.0628	.0660
10	19.60	12.20	2.38	1.52	.2634	.1107	.0177	.0431	.0475	.0524	.0546	.0546	.0651	.0668	.0679
11	8.61	8.11	2.44	1.52	.2618	.1073	.0138	.0400	.0450	.0488	.0538	.0550	.0638	.0675	.0700
12	11.08	9.09	2.52	1.58	.2680	.1063	.0187	.0486	.0523	.0523	.0598	.0598	.0691	.0691	.0691
13	11.08	9.12	2.42	1.53	.2664	.1101	.0186	.0464	.0501	.0556	.0556	.0594	.0668	.0668	.0668
14	30.67	15.25	2.49	1.56	.2638	.1059	.0226	.0484	.0524	.0537	.0591	.0591	.0664	.0697	.0717
15	31.44	12.20	5.05	3.08	.4494	.0890	.0061	.0270	.0320	.0331	.0348	.0337	.0408	.0397	.0370
$\tau = 18°$															
16	9.27	12.29	0.52	0.36	0.1228	0.2362	0.1429	0.3349	0.2450	0.0684	0.0490	0.0388	0.0102		
17	16.29	12.26	.98	.62	.2168	.2212	.0626	.1170	.1518	.1931	.2655	.4270	.1844	0.0626	0.0386
18	23.86	12.20	1.64	1.03	.3206	.1955	.0435	.0850	.1016	.1119	.1244	.1379	.1596	.1843	.2218
19	34.81	12.26	2.64	1.64	.4632	.1755	.0318	.0687	.0790	.0831	.0903	.0934	.1016	.1057	.1088
20	34.83	12.23	2.57	1.62	.4658	.1812	.0286	.0637	.0736	.0808	.0863	.0863	.0967	.1033	.1066
21	34.83	12.23	2.64	1.62	.4658	.1764	.0280	.0604	.0736	.0775	.0846	.0874	.0945	.1028	.1061
$\tau = 24°$															
22	12.46	12.29	0.48	0.35	0.1650	0.3438	0.1593	0.3226	0.4758	0.1899	0.0807	0.0582	0.0347	0.0112	
23	22.58	12.26	1.02	.57	.3004	.2943	.0810	.1507	.1876	.2255	.2860	.3813	.5310	.1691	0.0625
$\tau = 30°$															
24	15.25	12.17	0.49	0.35	0.2060	0.4204	0.1791	0.3281	0.4770	0.4958	0.1354	0.0844	0.0500	0.0292	0.0167
25	27.37	12.20	1.05	.63	.3678	.3503	.1057	.1907	.2291	.2716	.3317	.4146	.5390	.4478	.1182

TABLE V.- Continued

PURE PLANING PRESSURE DATA OBTAINED WITH A PLANING

SURFACE HAVING A 40° ANGLE OF DEAD RISE

AND HORIZONTAL CHINE FLARE

LANGLEY TANK MODEL 302-A

(Density of tank water, 63.4 lb/cu ft)

Run	Pressure p/q at orifice number -												
	10	11	12	13	14	15	16	17	18	19	20	21	22
$\tau = 9^\circ$													
1													
2	0.0799	0.0905	0.1166	0.1959	0.1548	0.0327	0.0211	0.0205	0.0133	0.0033			
3	.0794	.0918	.1207	.1959	.1599	.0340	.0196	.0196	.0113				
4	.0415	.0415	.0415	.0435	.0477	.0518	.0508	.0529	.0580	.0653	0.0674	0.0767	0.1741
5	.0309	.0320	.0320	.0331	.0353	.0370	.0364	.0364	.0420	.0436	.0420	.0420	.0552
$\tau = 12^\circ$													
6													
7	0.0017												
8	.0055												
9	.0817	0.0879	0.0963	0.1152	0.1413	0.2063	0.3005	0.0900	0.0262	0.0262	0.0178		
10	.0872	.0949	.1038	.1236	.1755	.2782	.1855	.0320	.0243	.0193	.0055		
11	.0850	.0888	.1000	.1262	.1725	.2812	.1988	.0375	.0238	.0188	.0138		
12	.0859	.0915	.0952	.1064	.1363	.1793	.2913	.1662	.0355	.0261	.0224		
13	.0890	.0928	.0890	.1057	.1503	.2115	.2708	.0519	.0241	.0148			
14	.0856	.0922	.1002	.1174	.1453	.1991	.3112	.1048	.0325	.0325	.0206	0.0040	
15	.0453	.0438	.0447	.0464	.0497	.0541	.0519	.0508	.0546	.0591	.0585	.0585	0.0740
$\tau = 18^\circ$													
16													
17	-0.0027												
18	.4436	0.1472	0.0373	0.0332	0.0218	0.0083							
19	.1252	.1303	.1385	.1549	.1775	.2011	0.2483	0.3334	0.4504	0.1118	0.0544	0.0174	
20	.1220	.1247	.1330	.1478	.1687	.1912	.2313	.2962	.4363	.1703	.0544	.0280	
21	.1187	.1258	.1324	.1478	.1670	.1896	.2302	.2934	.4286	.2077	.0681	.0159	
$\tau = 24^\circ$													
22													
23	0.0287	0.0062											
$\tau = 30^\circ$													
24													
25	0.0363	0.0259	0.0207										

TABLE V.- Continued

PURE PLANING PRESSURE DATA OBTAINED WITH A PLANING

SURFACE HAVING A 40° ANGLE OF DEAD RISE

AND HORIZONTAL CHINE FLARE

LANGLEY TANK MODEL 302-A

(Density of tank water, 63.4 lb/cu ft)

Run	Pressure p/q at orifice number -												
	23	24	25	26	27	28	29	30	31	32	33	34	35
$\tau = 9^\circ$													
1									0.0221	0.0596	0.0856	0.1016	0.1076
2									.0105	.0311	.0416	.0483	.0549
3									.0072	.0299	.0402	.0464	.0526
4	0.0145								.0031	.0218	.0301	.0363	.0404
5	.0751	0.0905	0.1187	0.1987	0.1783	0.0414	0.0215	0.0204	.0000	.0171	.0248	.0298	.0326
$\tau = 12^\circ$													
6									0.0363	0.1011	0.1273	0.1352	0.1137
7									.0265	.0738	.1059	.1375	.1617
8									.0273	.0754	.1066	.1377	.1629
9									.0073	.0356	.0524	.0628	.0701
10									.0121	.0397	.0546	.0640	.0723
11									.0038	.0338	.0475	.0575	.0662
12									.0112	.0411	.0542	.0635	.0710
13									.0093	.0408	.0556	.0649	.0723
14									.0153	.0431	.0577	.0670	.0750
15	0.0927	0.1065	0.1143	0.1347	0.1827	0.3008	0.1871	0.0447	.0028	.0254	.0370	.0447	.0502
$\tau = 18^\circ$													
16									0.0653	0.1725	0.2410	0.2655	0.1368
17									.0446	.1148	.1610	.2067	.2492
18									.0249	.0808	.1140	.1368	.1575
19									.0195	.0667	.0893	.1057	.1180
20									.0165	.0582	.0846	.1000	.1121
21									.0231	.0654	.0918	.1055	.1137
$\tau = 24^\circ$													
22									0.1001	0.2471	0.3492	0.3961	0.2022
23									.0574	.1517	.2194	.2747	.3239
$\tau = 30^\circ$													
24									0.1271	0.3072	0.4364	0.5166	0.3791
25									.0829	.2042	.2871	.3545	.4167

TABLE V.- Continued

PURE PLANING PRESSURE DATA OBTAINED WITH A PLANING

SURFACE HAVING A 40° ANGLE OF DEAD RISE

AND HORIZONTAL CHINE FLARE

LANGLEY TANK MODEL 302-A

(Density of tank water, 63.4 lb/cu ft)

Run	Pressure p/q at orifice number -												
	36	37	38	39	40	41	42	43	44	45	46	47	48
$\tau = 9^\circ$													
1	0.1032	0.0999	0.0850	0.0315	0.0105	0.0083							
2	.0577	.0649	.0699	.0727	.0794	.0877	0.1193	0.0555	0.0150	0.0105	0.0044		
3	.0567	.0629	.0691	.0722	.0794	.0866	.1217	.0526	.0113				
4	.0415	.0456	.0477	.0498	.0498	.0518	.0612	.0705	.0736	.0767	.0829	0.0871	0.1099
5	.0342	.0375	.0397	.0397	.0414	.0431	.0458	.0524	.0524	.0524	.0552	.0530	.0591
$\tau = 12^\circ$													
6	0.0203	0.0126	0.0027										
7	.1702	.1645	.1262	0.0344	0.0135	0.0034							
8	.1678	.1629	.1180	.0230	.0098	.0033							
9	.0754	.0817	.0879	.0911	.0974	.1047	0.1529	0.1811	0.1382	0.0209	0.0042		
10	.0762	.0839	.0894	.0927	.0988	.1076	.1512	.1551	.0585	.0105			
11	.0712	.0788	.0850	.0900	.0962	.1050	.1588	.1688	.0575	.0125			
12	.0747	.0822	.0859	.0896	.0952	.1008	.1419	.1905	.1643	.0504	.0168		
13	.0779	.0835	.0890	.0928	.0983	.1039	.1317	.1614	.1076	.0074			
14	.0776	.0849	.0909	.0955	.1002	.1082	.1500	.1851	.1500	.0405	.0126	0.0046	
15	.0519	.0574	.0591	.0591	.0618	.0640	.0673	.0789	.0789	.0795	.0828	.0800	0.0867
$\tau = 18^\circ$													
16	0.0112												
17	.2910	0.3242	0.2753	0.0500	0.0125								
18	.1762	.1980	.2239	.2550	.2944	0.3358	0.0114						
19	.1262	.1365	.1436	.1508	.1590	.1683	.2196	0.3560	0.3570	0.1867	0.0154		
20	.1203	.1302	.1368	.1445	.1511	.1621	.2083	.3401	.3555	.2544	.0176	0.0187	
21	.1225	.1308	.1396	.1473	.1528	.1627	.2072	.3379	.3566	.2638	.0440		
$\tau = 24^\circ$													
22	0.0143												
23	.3874	0.4520	0.4520	0.1056	0.0102								
$\tau = 30^\circ$													
24	0.0240												
25	.4892	0.5493	0.5794	0.2643	0.0176								

TABLE V.- Continued

PURE PLANING PRESSURE DATA OBTAINED WITH A PLANING

SURFACE HAVING A 40° ANGLE OF DEAD RISE

AND HORIZONTAL CHINE FLARE

LANGLEY TANK MODEL 302-A

(Density of tank water, 63.4 lb/cu ft)

Run	Pressure p/q at orifice number -												
	49	50	51	52	53	54	55	56	57	58	59	60	61
$\tau = 9^\circ$													
1								0.0072	0.0458	0.0508	0.0712	0.0773	0.0778
2								-.0006	.0327	.0327	.0516	.0577	.0594
3								.0021	.0309	.0340	.0505	.0567	.0588
4	0.1285	0.0477	0.0052					.0000	.0238	.0269	.0425	.0456	.0456
5	.0640	.0845	.1236	0.0972	0.0524	0.0110	0.0011	-.0083	.0204	.0193	.0348	.0414	.0397
$\tau = 12^\circ$													
6								0.0220	0.0659	0.0824	0.0993	0.1088	0.1154
7								.0186	.0625	.0811	.0997	.1099	.1206
8								.0208	.0628	.0809	.1006	.1093	.1202
9								.0063	.0419	.0492	.0670	.0754	.0785
10								.0055	.0414	.0464	.0668	.0740	.0778
11								-.0050	.0375	.0475	.0625	.0700	.0750
12								.0056	.0411	.0504	.0654	.0728	.0747
13								.0000	.0371	.0482	.0631	.0705	.0761
14								.0166	.0498	.0544	.0756	.0823	.0843
15	0.0916	0.1143	0.1496	0.1877	0.1518	0.0359	0.0033	-.0050	.0326	.0331	.0530	.0585	.0591
$\tau = 18^\circ$													
16								0.0490	0.1338	0.1736	0.2093	0.2328	0.2604
17								.0522	.1208	.1518	.1893	.2056	.2334
18								.0373	.0933	.1223	.1493	.1648	.1835
19								.0256	.0770	.0975	.1190	.1293	.1385
20								.0418	.0758	.0918	.1187	.1308	.1363
21								.0374	.0824	.0984	.1209	.1319	.1407
$\tau = 24^\circ$													
22								0.0919	0.2165	0.2767	0.3461	0.3880	0.4554
23								.0728	.1773	.2276	.2778	.3136	.3434
$\tau = 30^\circ$													
24								0.1500	0.3041	0.3885	0.4708	0.5416	0.6343
25								.1161	.2446	.3130	.3794	.4208	.4706

TABLE V.- Continued

PURE PLANING PRESSURE DATA OBTAINED WITH A PLANING

SURFACE HAVING A 40° ANGLE OF DEAD RISE

AND HORIZONTAL CHINE FLARE

LANGLEY TANK MODEL 302-A

(Density of tank water, 63.4 lb/cu ft)

Run	Pressure p/q at orifice number -												
	62	63	64	65	66	67	68	69	70	71	72	73	74
$\tau = 9^\circ$													
1	0.0773	0.0789	0.0789	0.0789	0.0784	0.0778	0.0778	0.0850	0.0033				
2	.0644	.0653	.0727	.0771	.0799	.0810	.0838	.0910	.0927	0.0916	0.0866	0.0844	0.0844
3	.0629	.0670	.0712	.0753	.0794	.0794	.0836	.0908	.0908	.0877	.0866	.0805	.0805
4	.0498	.0508	.0539	.0560	.0560	.0539	.0560	.0612	.0622	.0653	.0632	.0767	.0788
5	.0436	.0436	.0469	.0480	.0486	.0458	.0475	.0535	.0530	.0530	.0497	.0596	.0596
$\tau = 12^\circ$													
6	0.1192	0.1264	0.1401	0.0099									
7	.1234	.1274	.1319	.1347	0.1369	0.1454	0.0000						
8	.1235	.1290	.1279	.1323	.1344	.1443	-.0011						
9	.0859	.0900	.0942	.0984	.1026	.1047	.1152	0.1256	0.1277	0.1361	0.1424	0.1466	0.1476
10	.0834	.0872	.0927	.0983	.1021	.1060	.1110	.1231	.1281	.1347	.1352	.1397	.1452
11	.0812	.0888	.0938	.0988	.1038	.1112	.1150	.1262	.1350	.1400	.1438	.1488	.1500
12	.0822	.0859	.0934	.0971	.1008	.1046	.1120	.1214	.1289	.1345	.1419	.1494	.1494
13	.0816	.0872	.0928	.0965	.1039	.1076	.1132	.1169	.1280	.1334	.1280	.1373	.1336
14	.0922	.0955	.1015	.1062	.1108	.1108	.1181	.1287	.1334	.1373	.1413	.1473	.1480
15	.0640	.0640	.0701	.0707	.0729	.0707	.0712	.0778	.0784	.0800	.0751	.0867	.0867
$\tau = 18^\circ$													
16	0.2992	-0.0061											
17	.2497	.2644	0.2829	0.3084	0.1213	-0.0065							
18	.2000	.2177	.2342	.2519	.2685	.2799	0.2944	0.3130	0.3400	0.0207			
19	.1477	.1570	.1642	.1734	.1796	.1878	.1970	.2114	.2247	.2370	0.2534	0.3099	0.3283
20	.1473	.1550	.1616	.1681	.1769	.1813	.1918	.2050	.2176	.2302	.2467	.2989	.3187
21	.1517	.1561	.1627	.1709	.1786	.1857	.1912	.2050	.2198	.2330	.2434	.3011	.3176
$\tau = 24^\circ$													
22	0.0817	-0.0071											
23	.3813	.4151	0.4602	0.5361	0.0000								
$\tau = 30^\circ$													
24	0.0042												
25	.5203	0.5784	0.6509	0.3441	0.0041								

TABLE V.- Continued

PURE PLANING PRESSURE DATA OBTAINED WITH A PLANING SURFACE HAVING A 40° ANGLE OF DEAD RISE AND HORIZONTAL CHINE FLARE

LANGLEY TANK MODEL 302-A

(Density of tank water, 63.4 lb/cu ft)

Run	Pressure p/q at orifice number -												
	75	76	77	78	79	80	81	82	83	84	85	86	87
$\tau = 9^\circ$													
1													
2	0.0844	0.0866	0.0089										
3	.0805	.0794	.0258	-0.0010									
4	.0819	.0871	.0891	.0933	0.0974	0.0974	0.0953	0.0902	0.0891	0.0010			
5	.0596	.0618	.0624	.0657	.0684	.0718	.0751	.0795	.0916	.0878	0.0845	0.0828	0.0828
$\tau = 12^\circ$													
6													
7													
8													
9	0.1487	0.1361	0.0094										
10	.1463	.0331											
11	.1588	.0225											
12	.1494	.1550	.0517										
13	.1298	.1261	.0594										
14	.1493	.1536	.0060										
15	.0872	.0889	.0889	0.0916	0.0933	0.0966	0.0999	0.1071	0.1308	0.1479	0.1479	0.1479	0.1496
$\tau = 18^\circ$													
16													
17													
18													
19	0.3529	0.0031											
20	.3495	.0044	-0.0060										
21	.3462	.0363											
$\tau = 24^\circ$													
22													
23													
$\tau = 30^\circ$													
24													
25													

TABLE V.- Concluded

PURE PLANING PRESSURE DATA OBTAINED WITH A PLANING

SURFACE HAVING A 40° ANGLE OF DEAD RISE

AND HORIZONTAL CHINE FLARE

LANGLEY TANK MODEL 302-A

(Density of tank water, 63.4 lb/cu ft)

Run	Pressure p/q at orifice number -												
	88	89	90	91	92	93	94	95	96	97	98	99	100
$\tau = 9^\circ$													
1						0.0298	0.0282			0.0149	0.0806		
2						.0105	.0733	0.2087		.0078	.0683	0.0971	
3						.0052	.0691	.2011		.0031	.0640	.0939	
4						.0021	.0446	.0591		.0021	.0477	.0580	
5	0.0834	0.0789	0.0039			.0006	.0386	.0464	0.1722	-.0011	.0420	.0486	0.0988
$\tau = 12^\circ$													
6						0.0797				0.0209	0.0203		
7						.0372	0.0547			.0192	.1330		
8						.0377	.0437			.0180	.1323		
9						.0063	.0879	0.1780		.0063	.0838	0.1288	
10						.0127	.0911	.2064		.0066	.0834	.1347	
11						.0075	.0925	.1938		-.0012	.0825	.1362	
12						.0075	.0934	.1718		.0037	.0803	.1270	
13						.0074	.0909	.1818		.0000	.0798	.1280	
14						.0166	.0909	.1772		.0139	.0909	.1354	
15	0.1369	0.0050				.0033	.0585	.0707	0.1783	.0011	.0629	.0723	0.1347
$\tau = 18^\circ$													
16						0.1164				0.0439			
17						.0609	0.1452			.0364	0.2649		
18						.0363	.2508			.0249	.2083	0.0218	
19						.0287	.1529	0.2432		.0174	.1436	.2144	
20						.0286	.1500	.2363		.0148	.1440	.2066	
21						.0319	.1484	.2352		.0209	.1434	.2088	
$\tau = 24^\circ$													
22						0.1491				0.0796			
23						.0800	0.4971			.0533	0.4059		
$\tau = 30^\circ$													
24						0.1718				0.1135			
25						.1068	0.7059			.0850	0.5421		

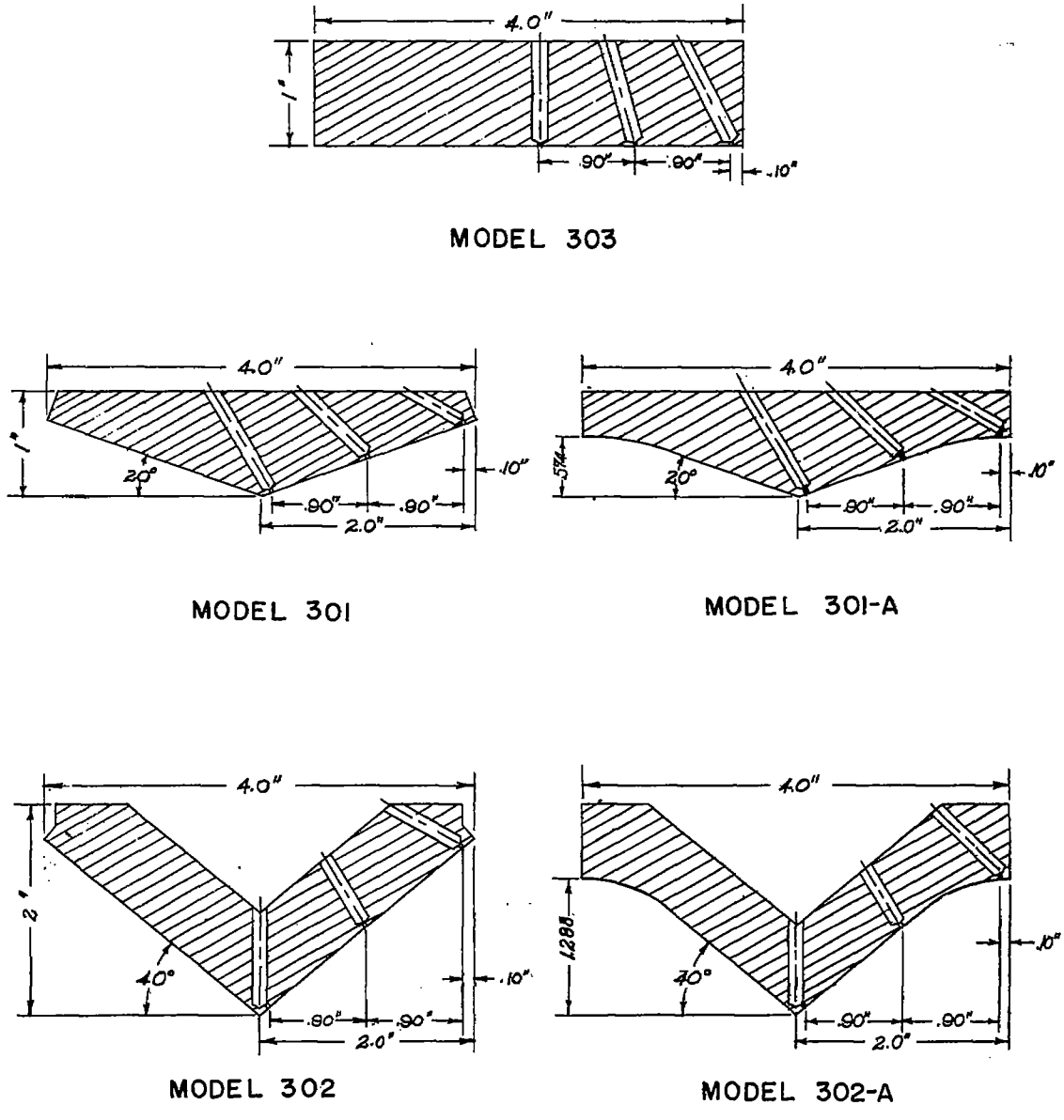

Figure 1.- Cross sections of models.

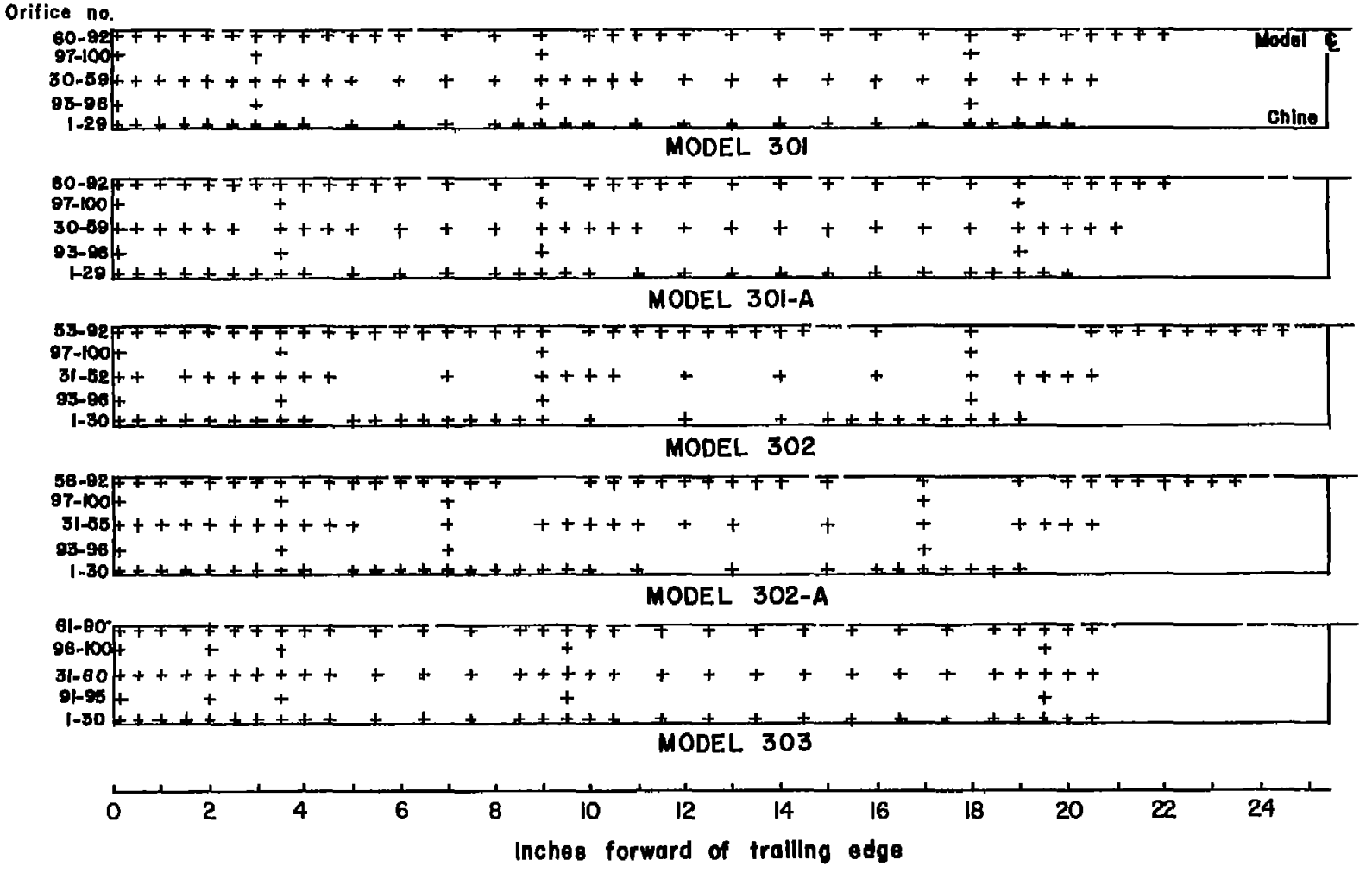

Figure 2.- Location of orifices in models.

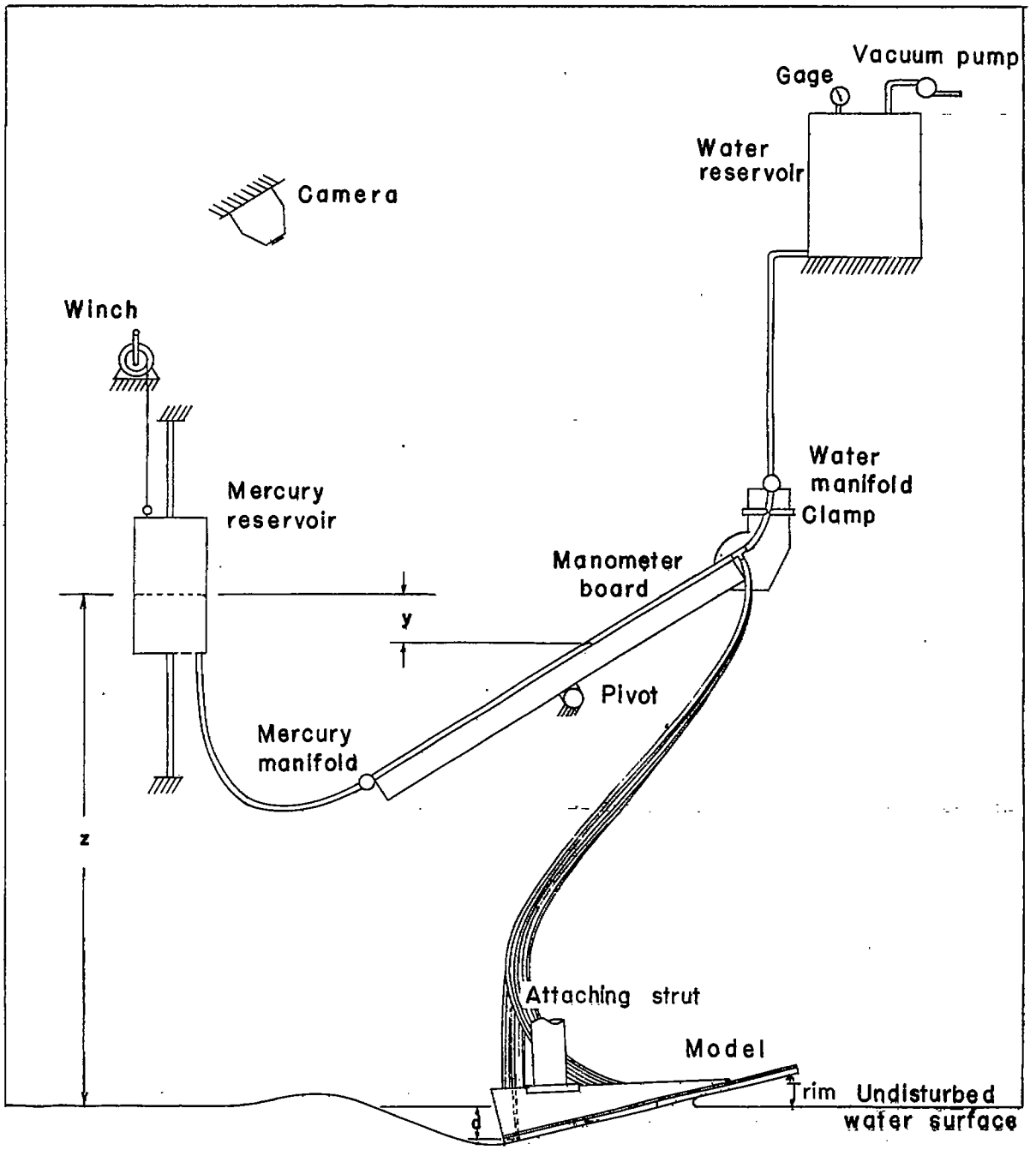

Figure 3.- Sketch of manometer system.

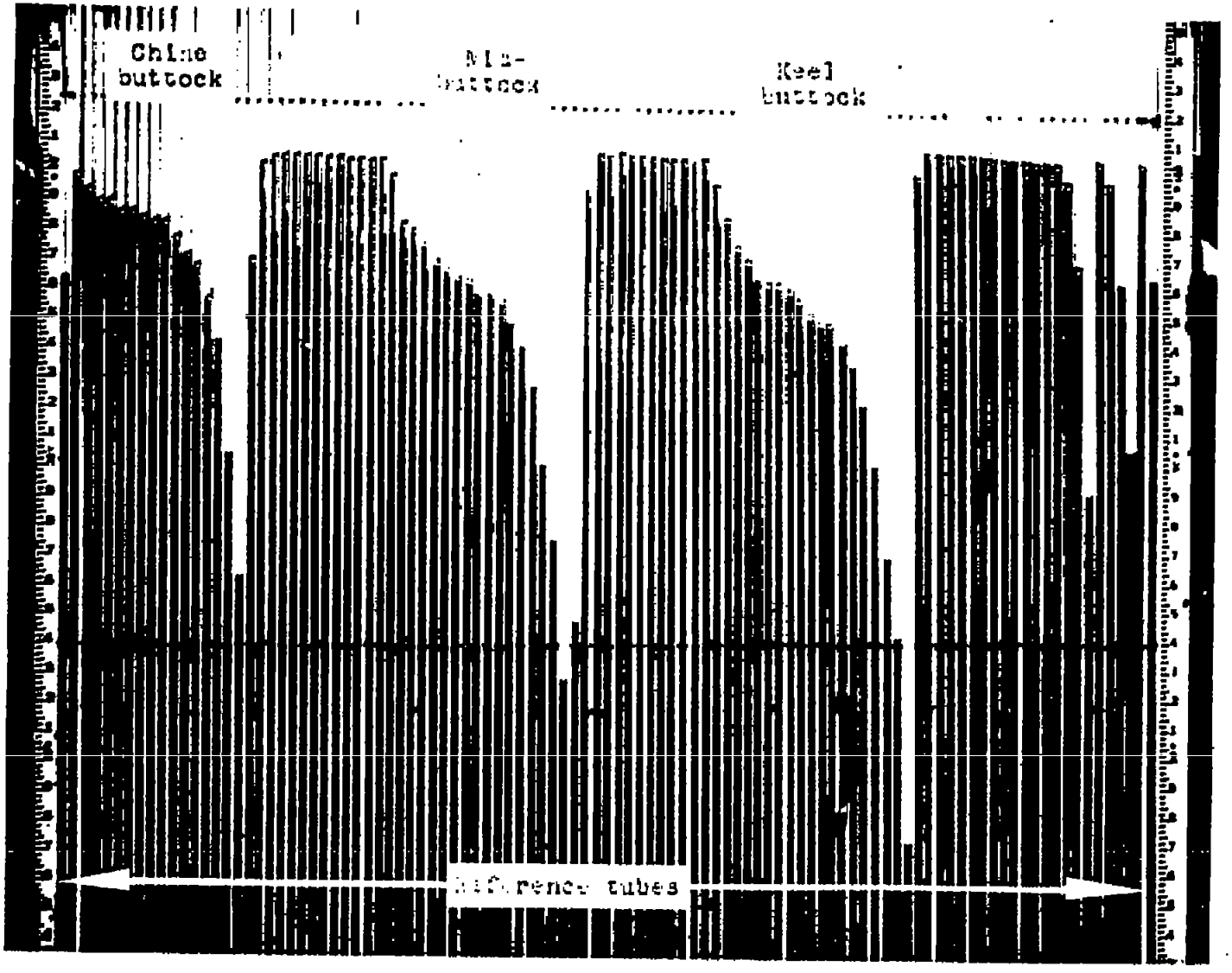

Figure 4.- Photograph of a typical pressure distribution.

L-89390

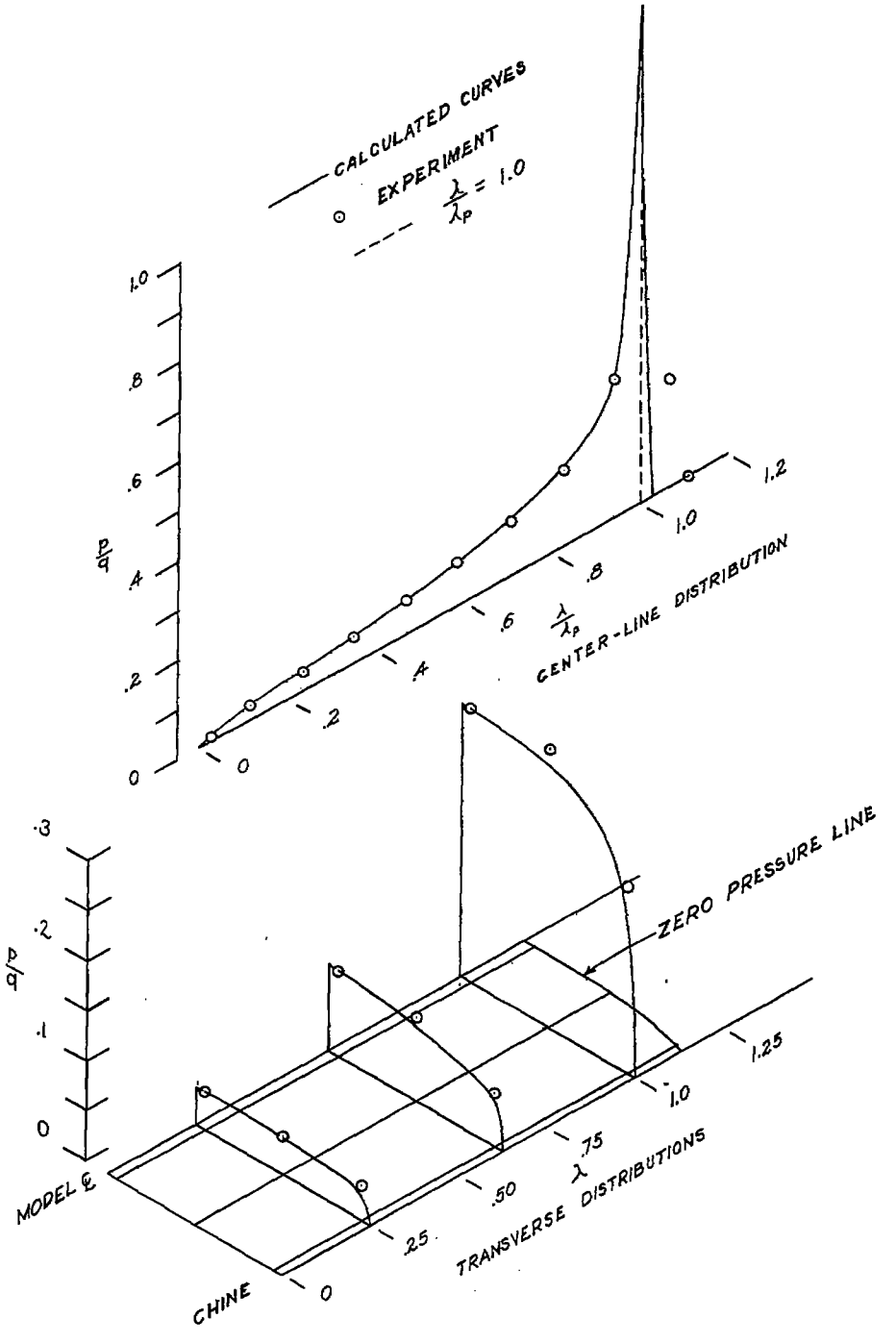

(a) $\frac{l_m}{b} = 1.07$; run 7.

Figure 5.- Typical flat-plate pressure distributions; comparison with theory. $\tau = 6^{\circ}$.

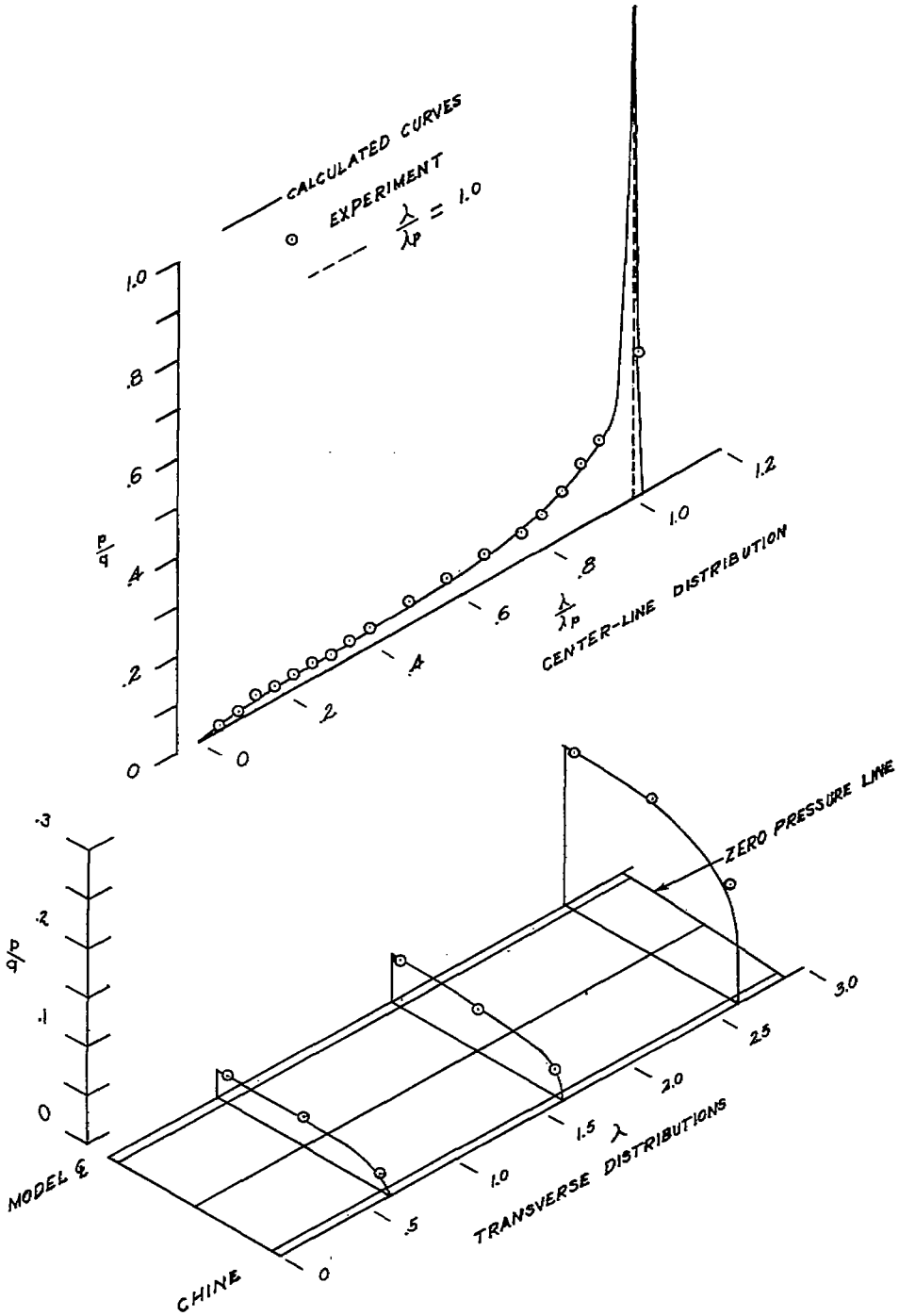

(b) $\frac{l_m}{b} = 2.87$; run 9.

Figure 5.- Continued.

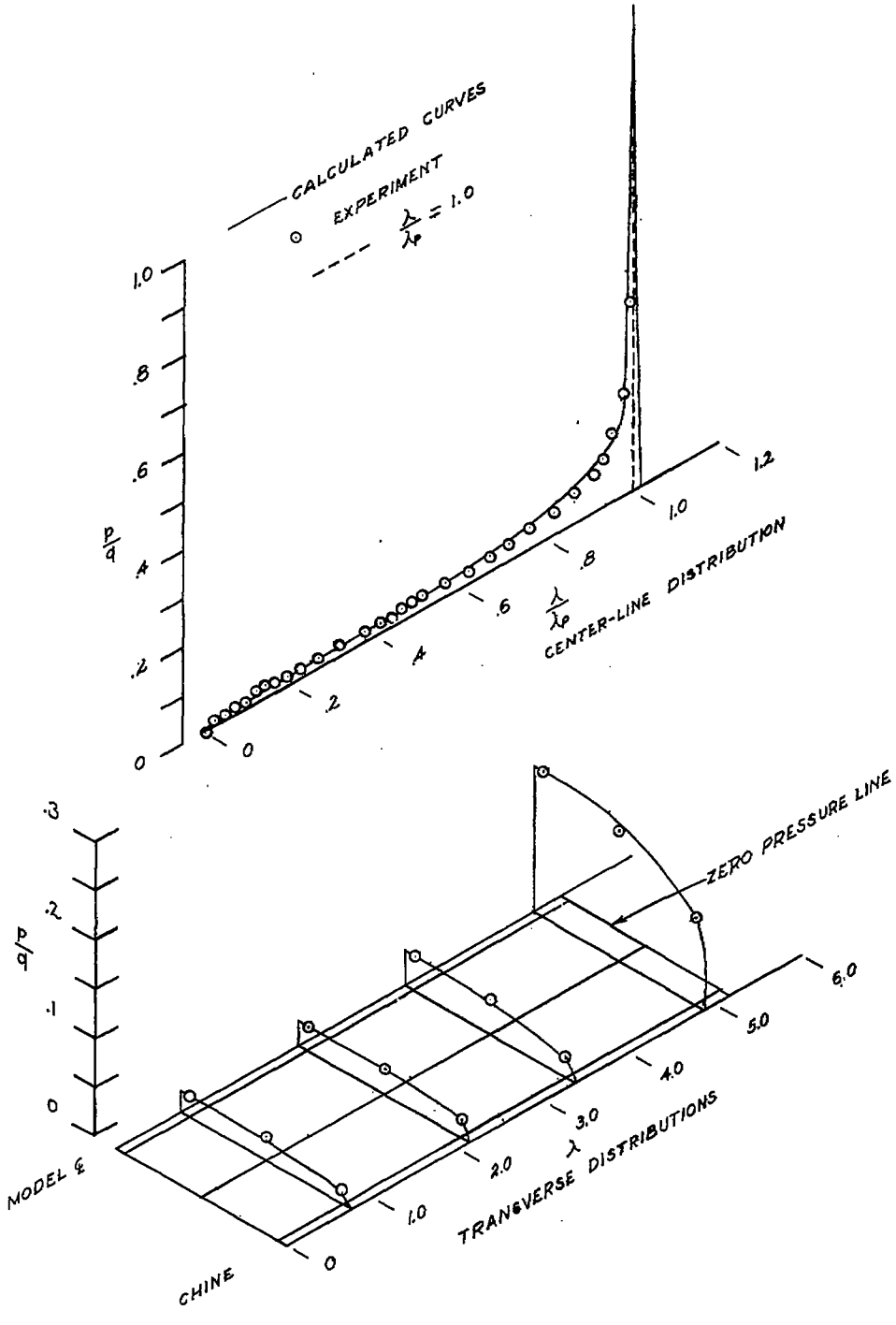

(c) $\frac{l_m}{b} = 5.07$; run 14.

Figure 5.- Concluded.

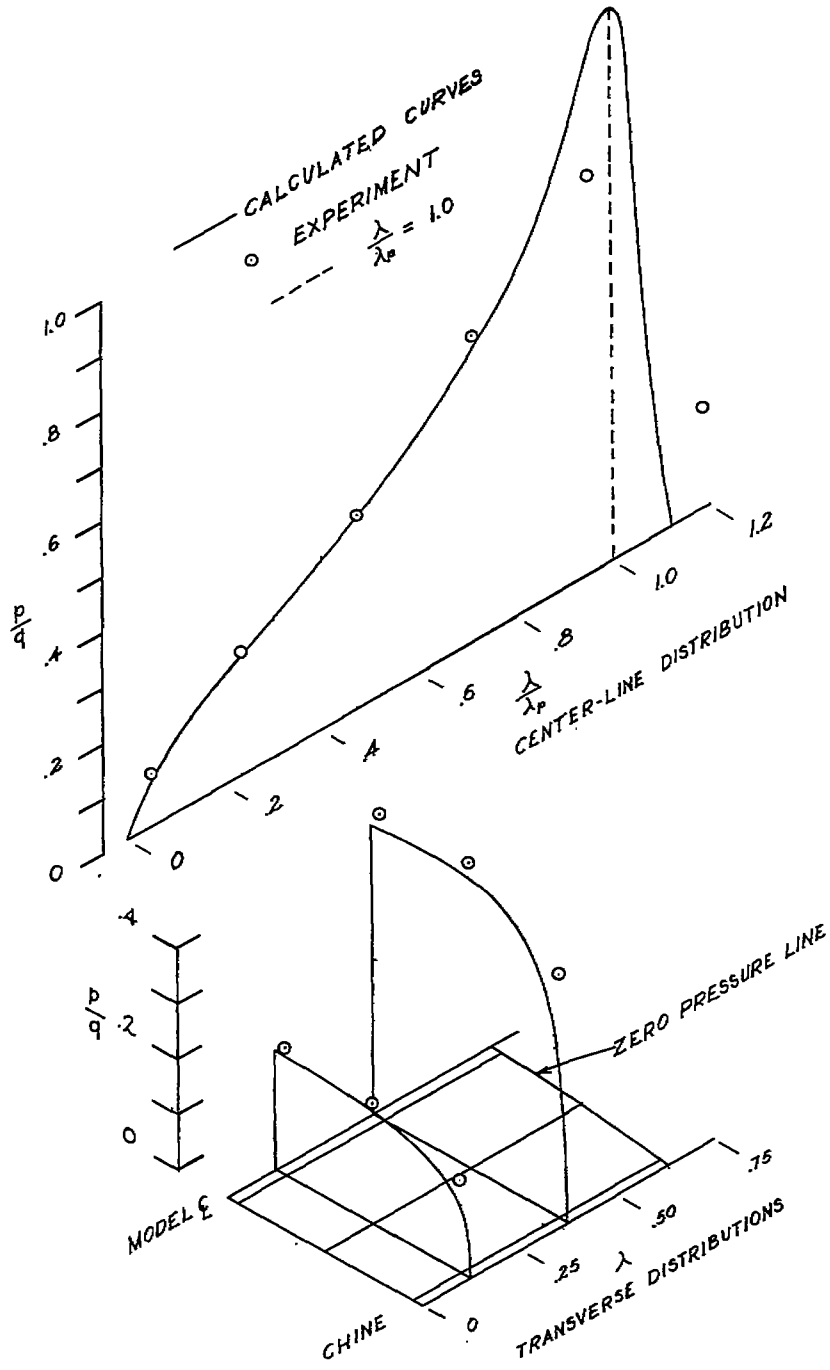

(a) $\frac{l_m}{b} = 0.50$; run 30.

Figure 6.- Typical flat-plate pressure distributions; comparison with theory. $\tau = 18^{\circ}$.

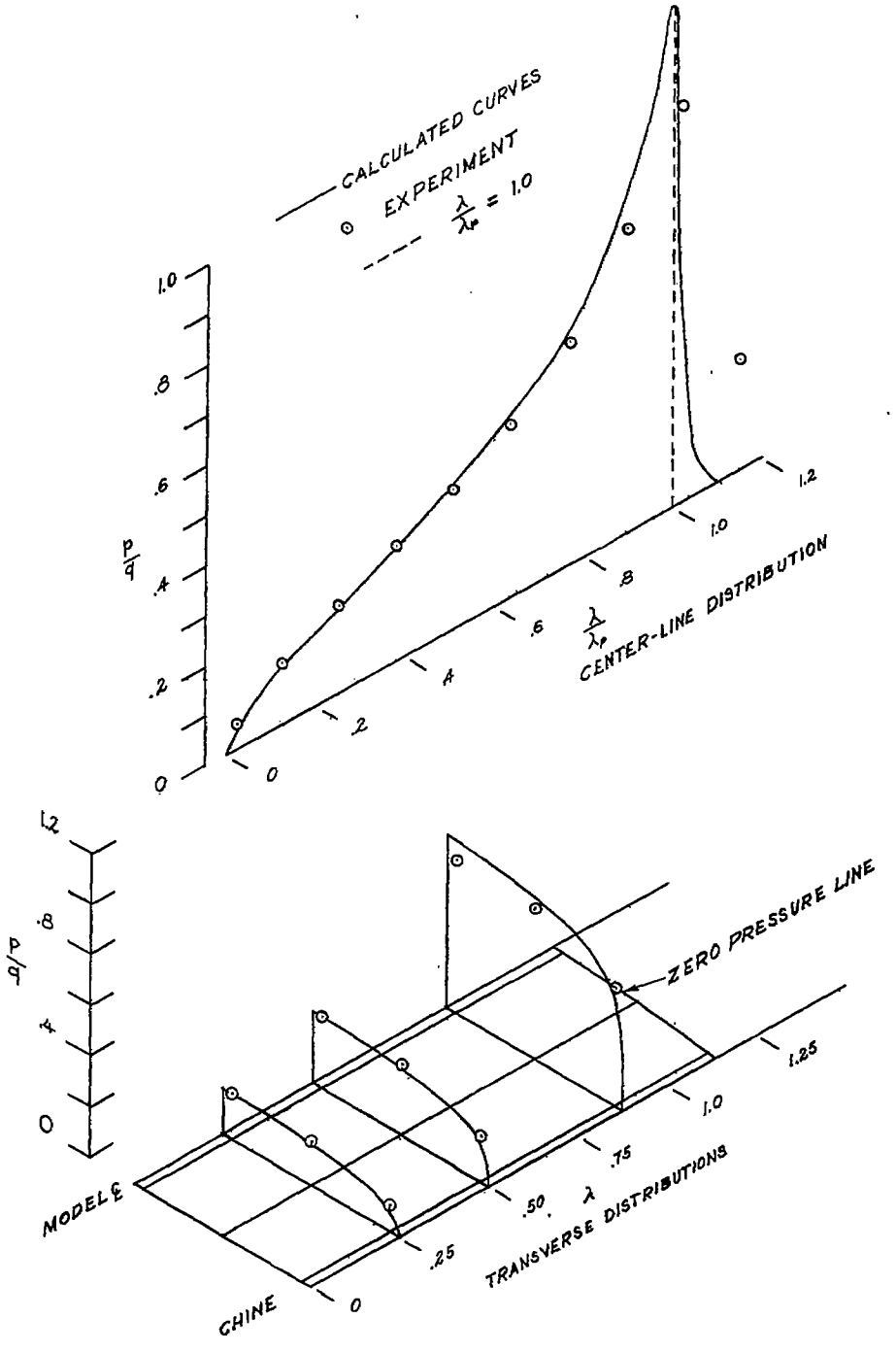

(b) $\frac{l_m}{b} = 1.00$; run 31.

Figure 6.- Concluded.

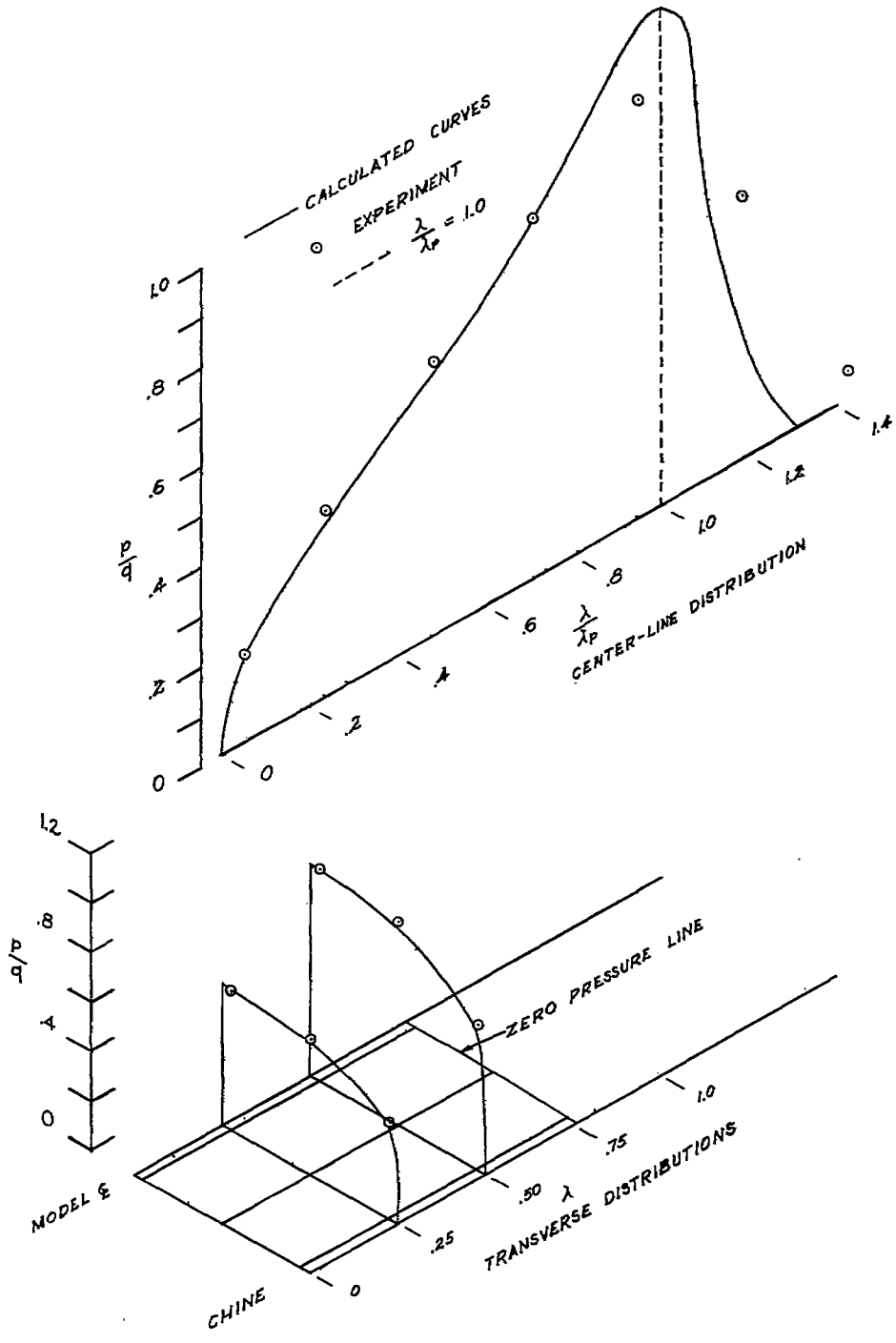

(a) $\frac{l_m}{b} = 0.55$; run 34.

Figure 7.- Typical flat-plate pressure distributions; comparison with theory. $\tau = 30^{\circ}$.

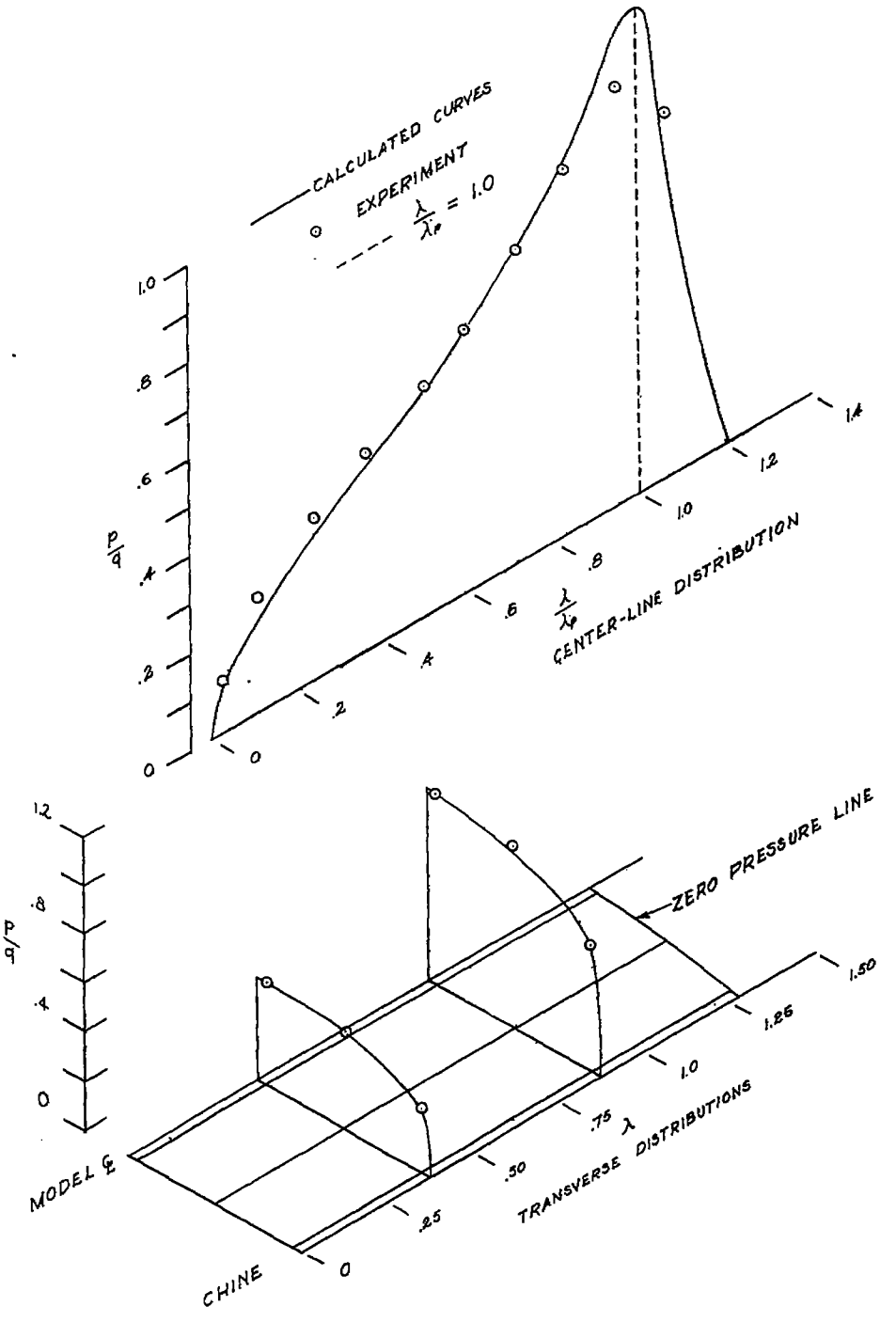

(b) $\frac{l_m}{b} = 1.07$; run 35.

Figure 7.- Concluded.

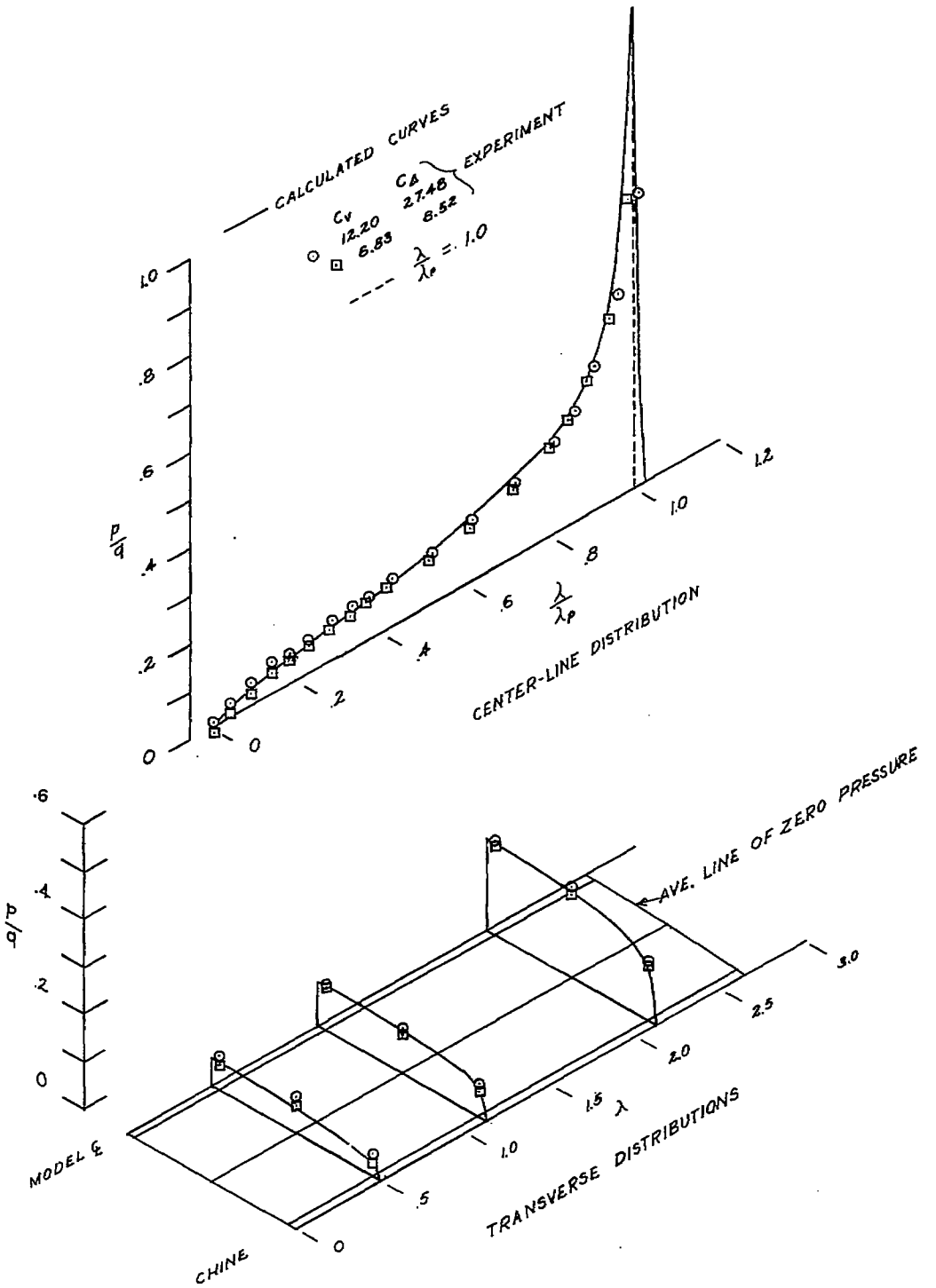

Figure 8.- Comparison of two conditions at the same value of C_{L_b} but at different speeds. $\tau = 12^\circ$; $\frac{l_m}{b} = 2.62$; runs 28 and 29.

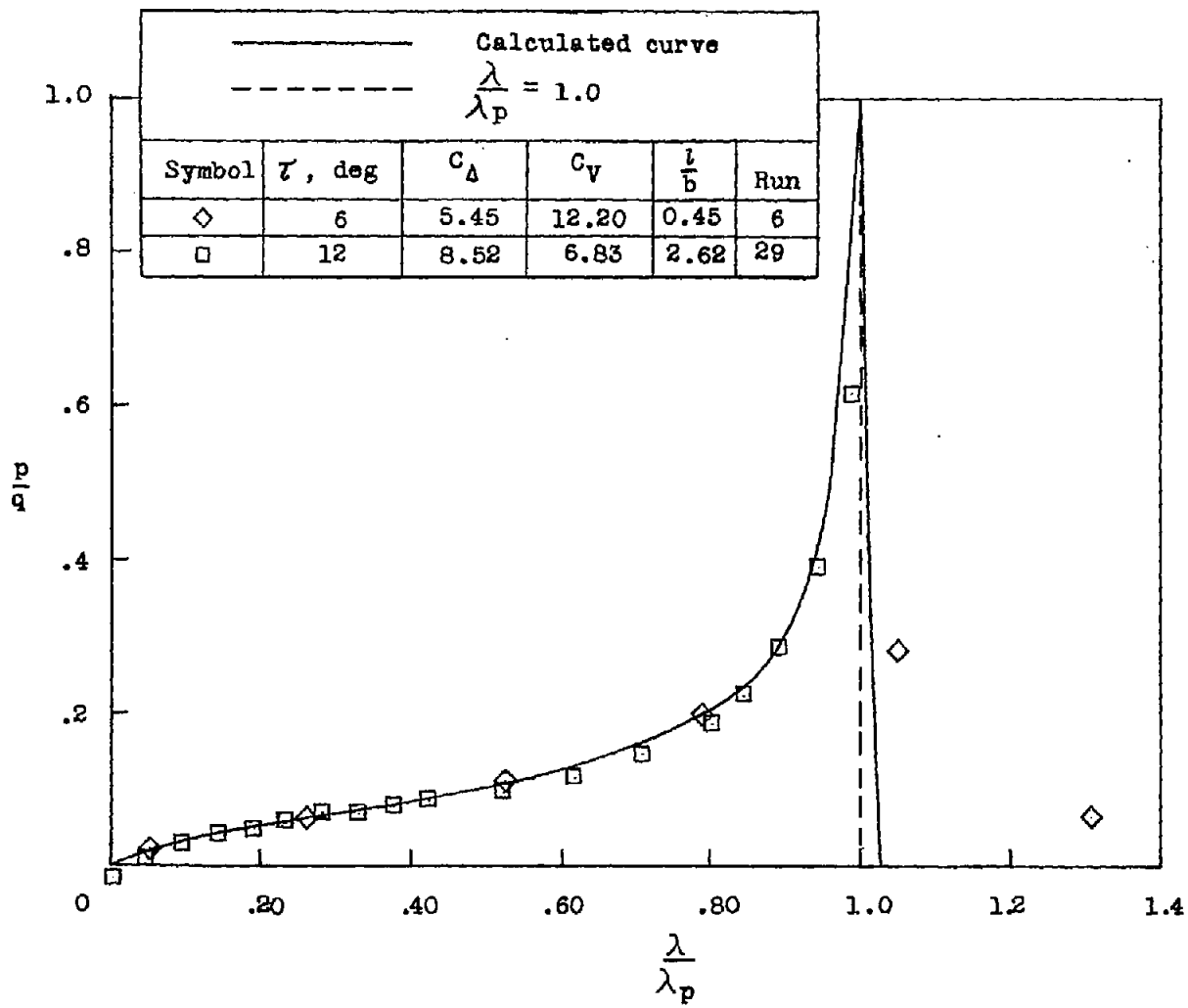

Figure 9.- Comparison of two conditions at different trims, wetted lengths, and speeds but at same normal-load coefficient. $\left(C_{N_S}\right)_c \approx 0.16$.

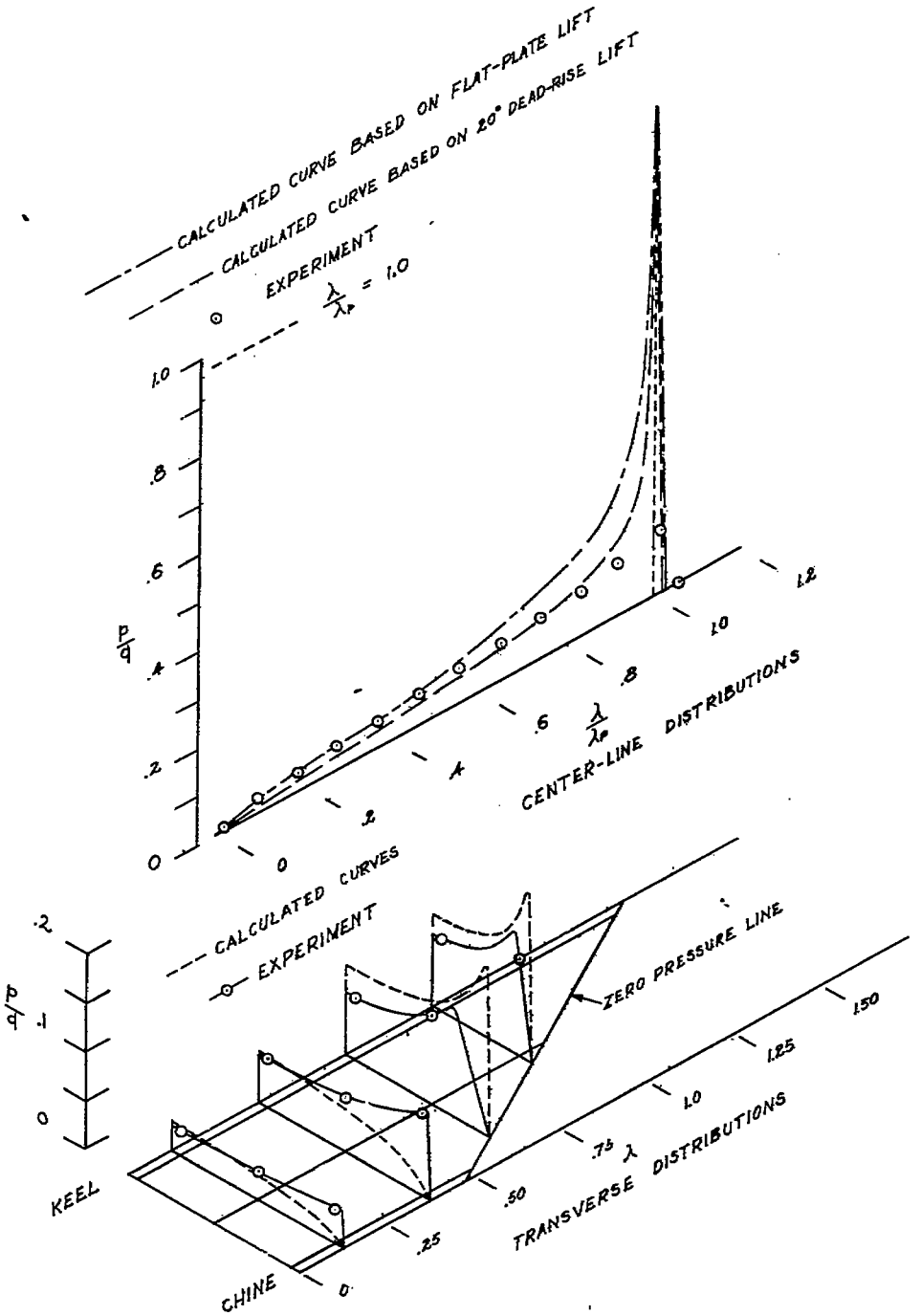

(a) $\tau = 6^{\circ}$; $\frac{l_m}{b} = 0.86$; run 5.

Figure 10.- Typical center-line and transverse pressure distributions obtained with the 20° dead-rise surface. Comparison with theory.

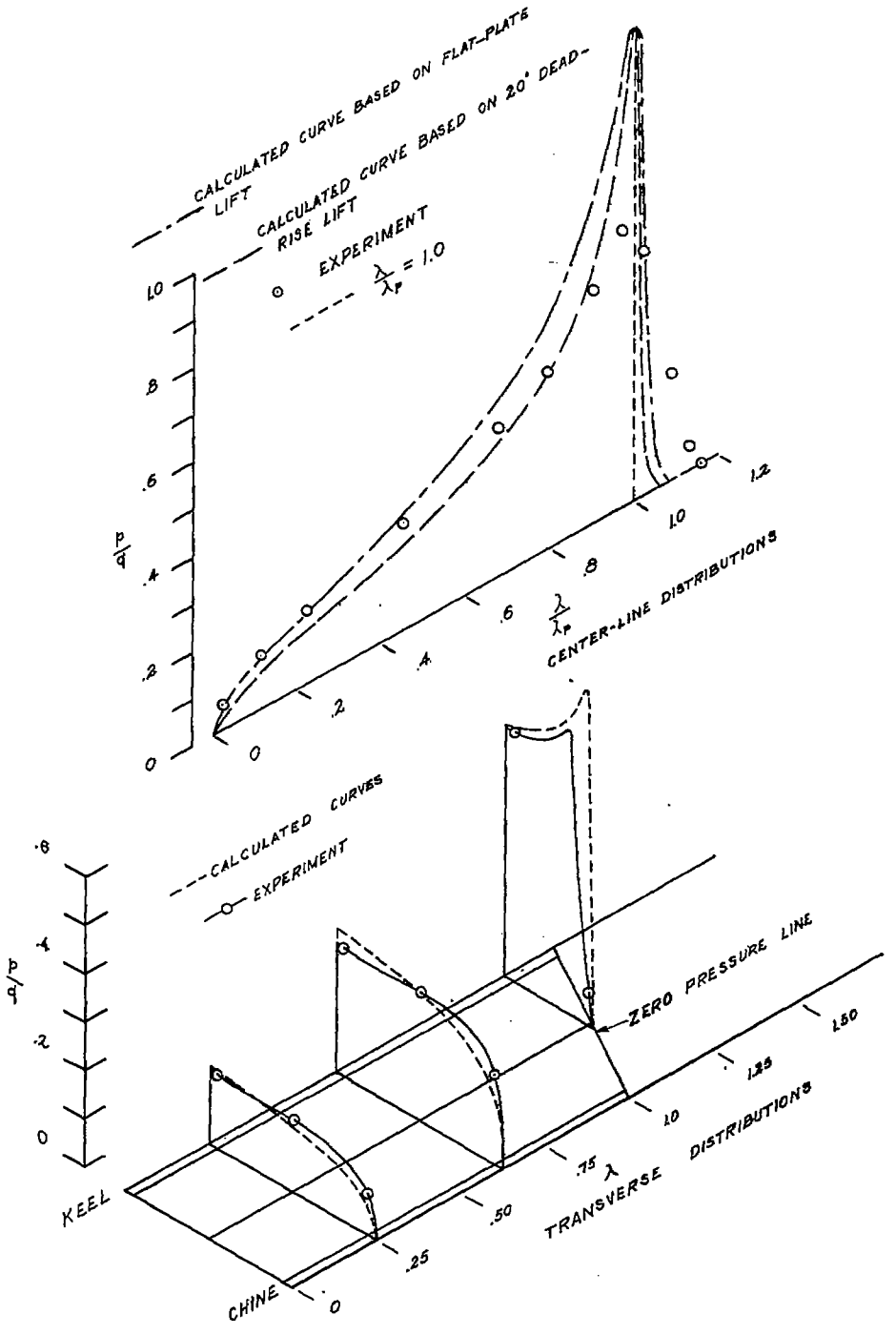

(b) $\tau = 18^{\circ}$; $\frac{l_m}{b} = 1.02$; run 25.

Figure 10.- Continued.

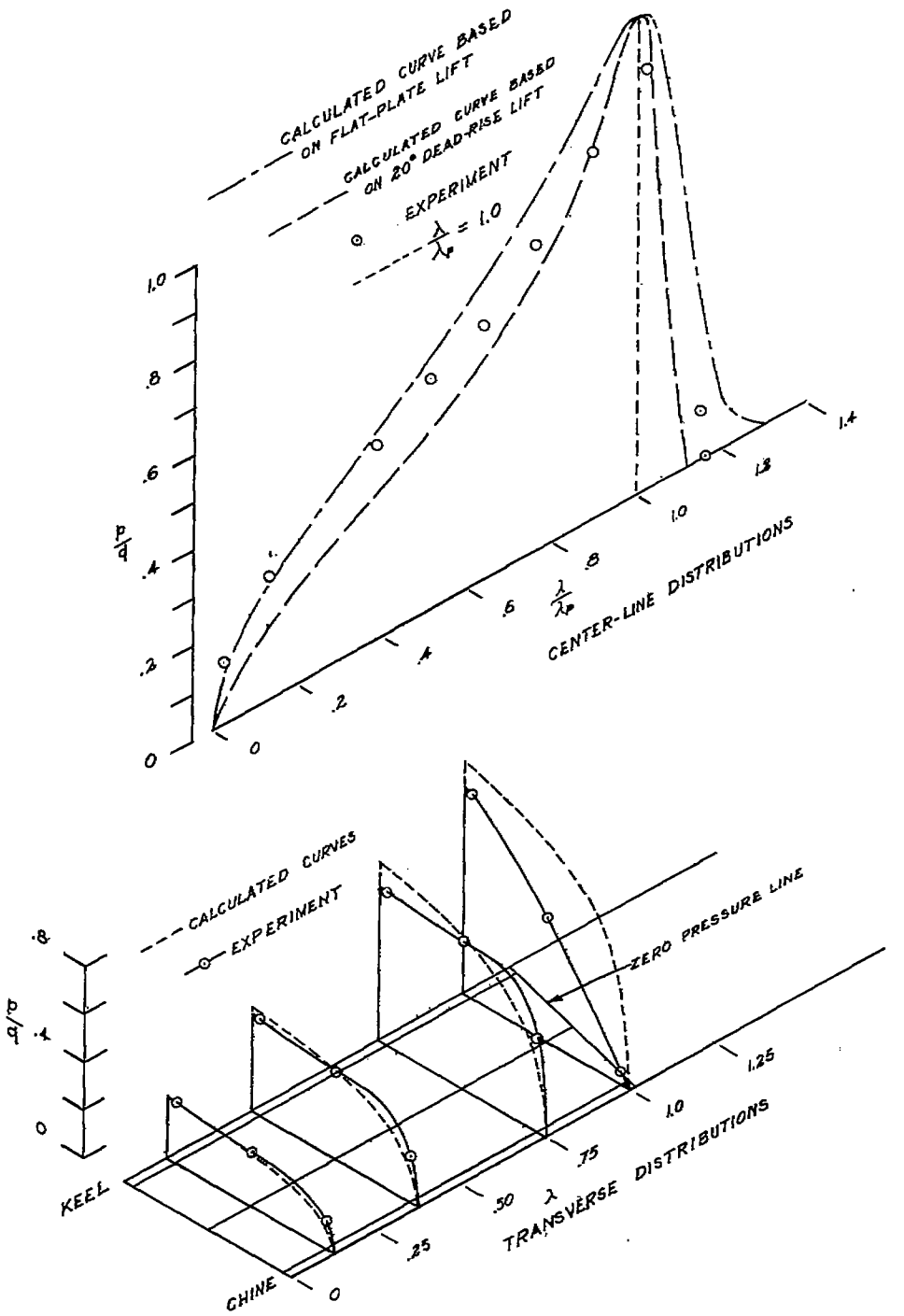

(c) $\tau = 30^{\circ}$; $\frac{l_m}{b} = 1.06$; run 30.

Figure 10.- Concluded.

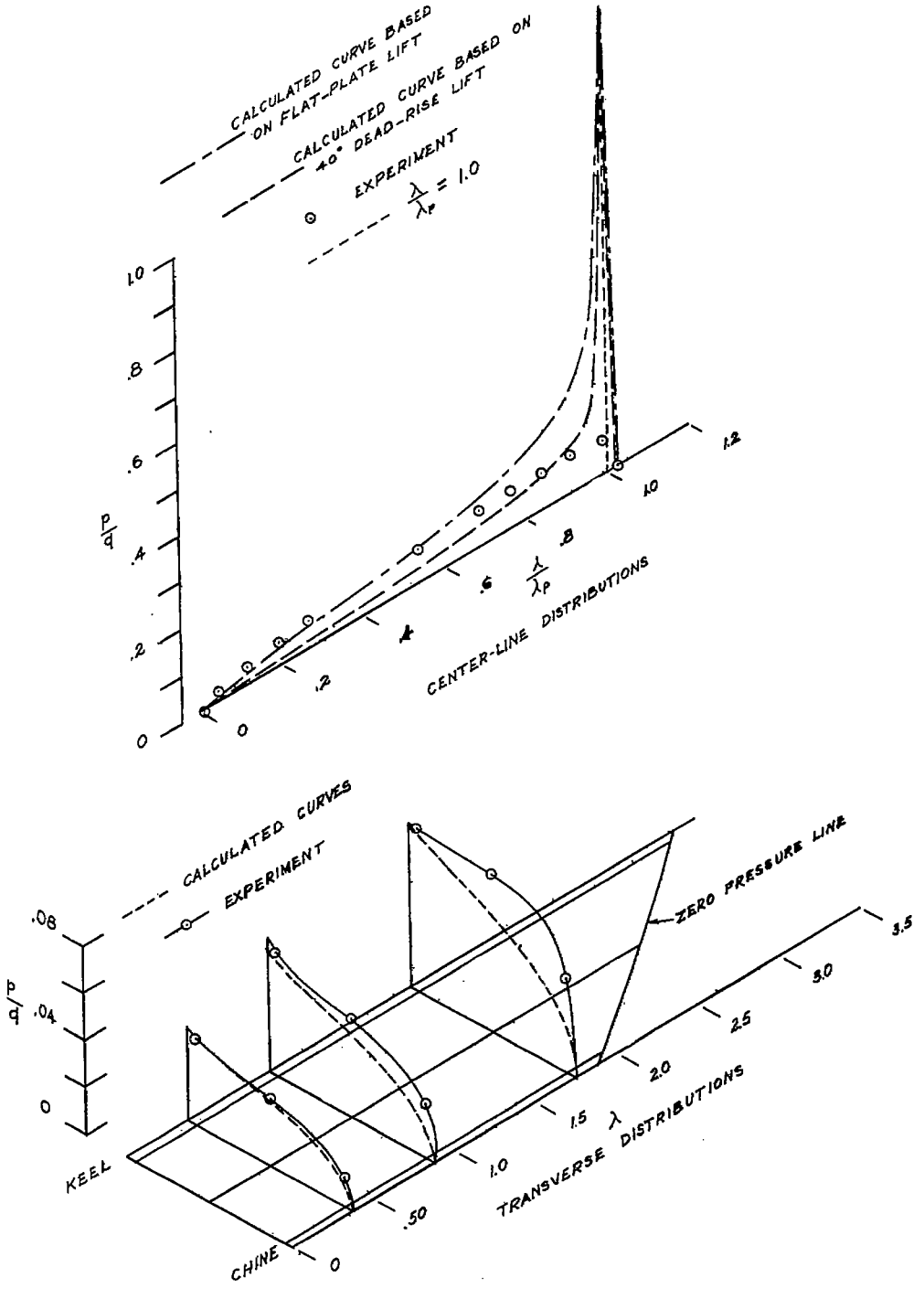

(a) $\tau = 9^{\circ}$; $\frac{l_m}{b} = 2.52$; run 4.

Figure 11.- Typical center-line and transverse pressure distributions obtained with the 40° dead-rise surface. Comparison with theory.

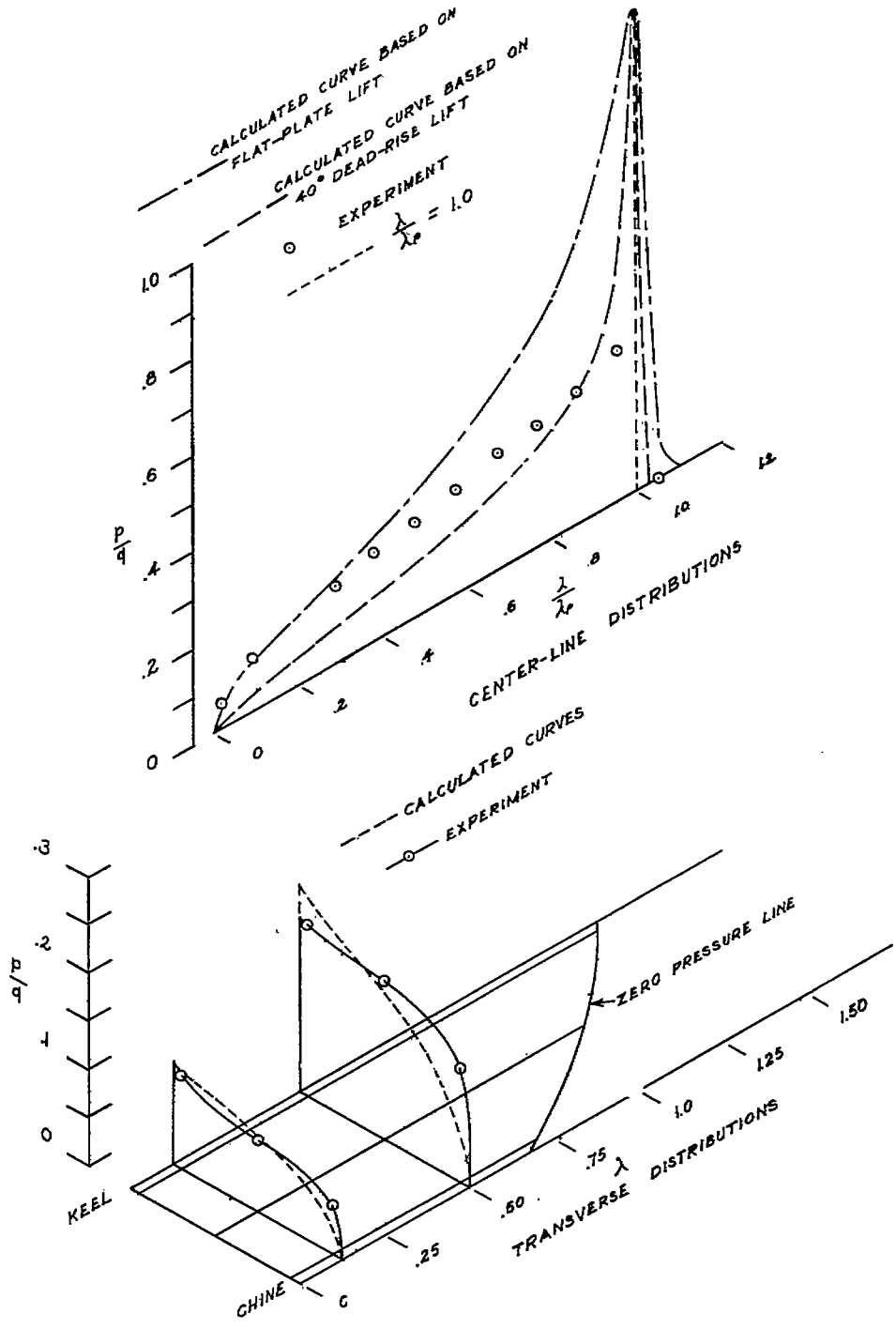

(b) $\tau = 18^{\circ}$; $\frac{l_m}{b} = 0.98$; run 12.

Figure 11.- Continued.

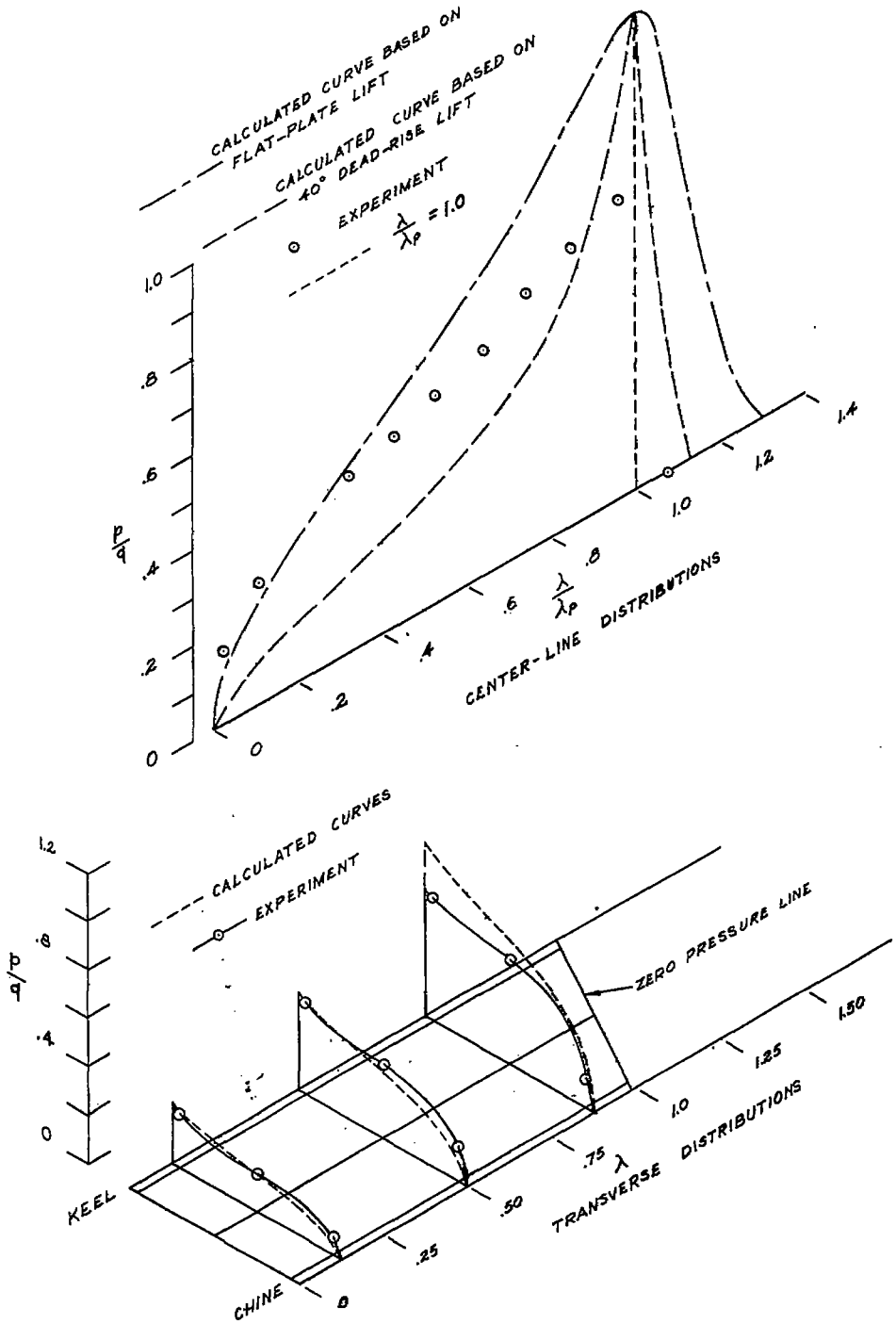

(c) $\tau = 30^{\circ}$; $\frac{l_m}{b} = 1.02$; run 19.

Figure 11.- Concluded.

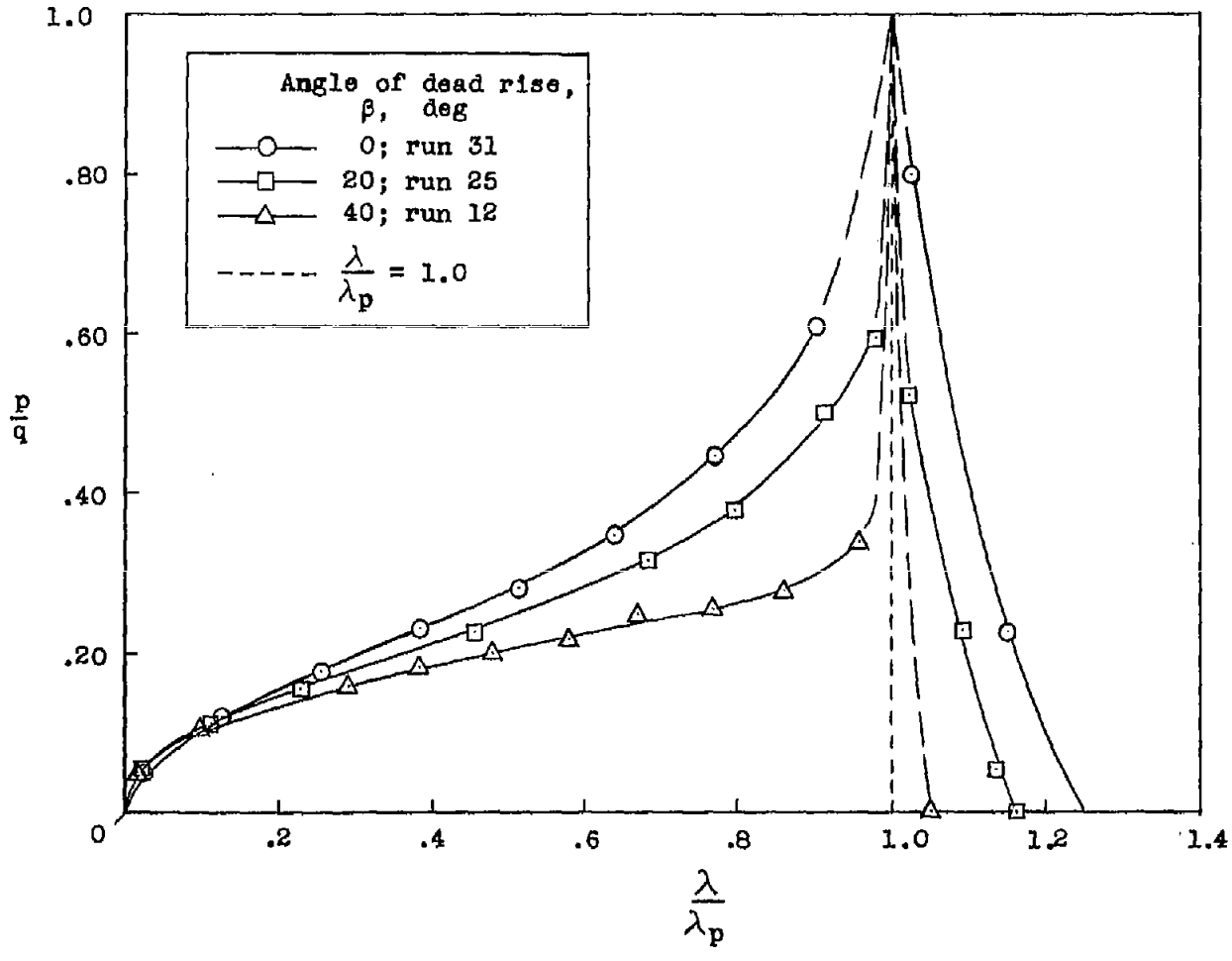

Figure 12.- Typical center-line distributions illustrating flattening of pressure curve as dead-rise angle is increased. Trim = 18°; $\frac{l_m}{b} \approx 1.0$. Long dashed lines indicate extrapolated data.

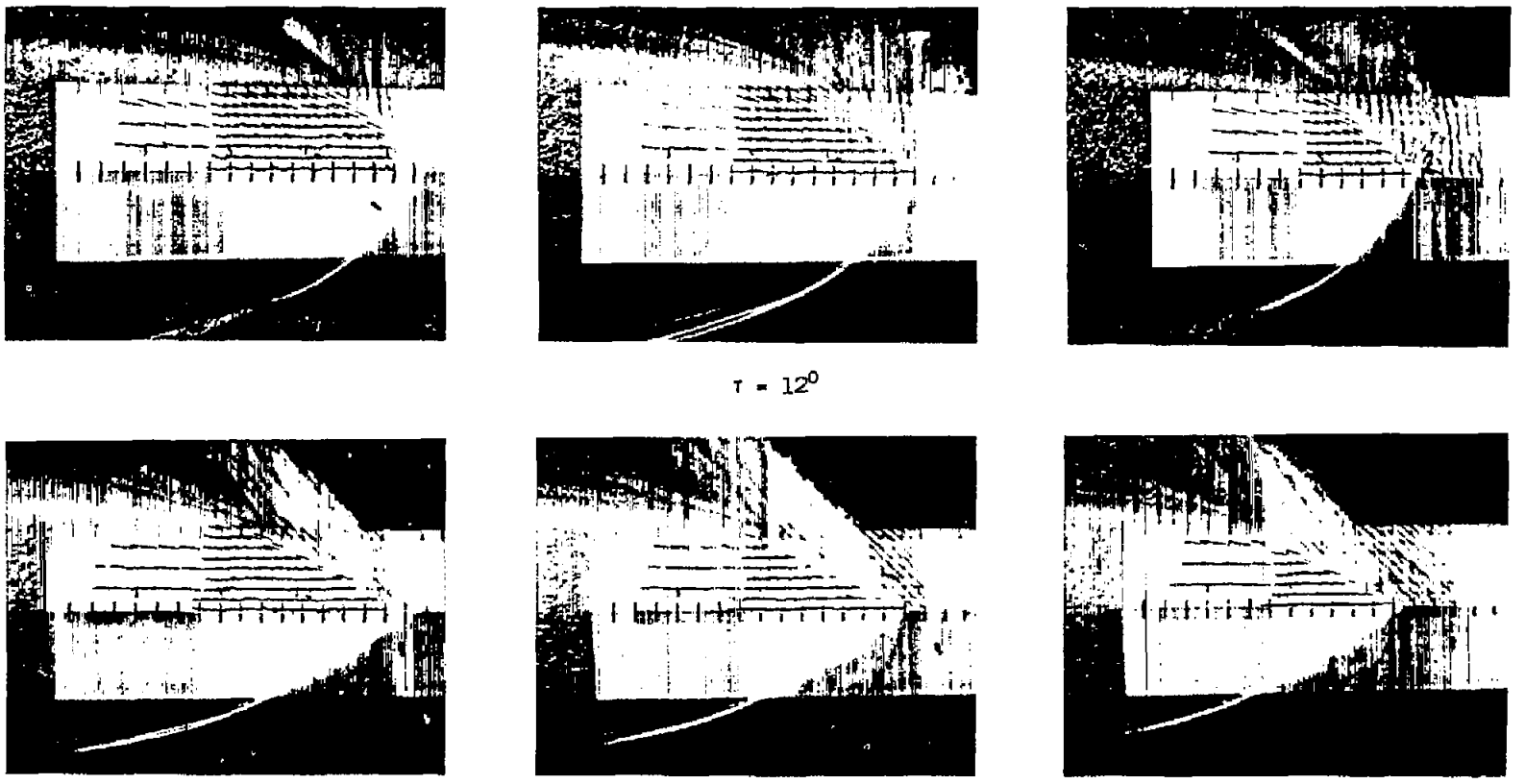

L-89340

Figure 13.- Typical underwater photographs of model with tufts. $\beta = 20^{\circ}$; b = 8 inches. Markings along chine and keel are spaced 1 inch apart.

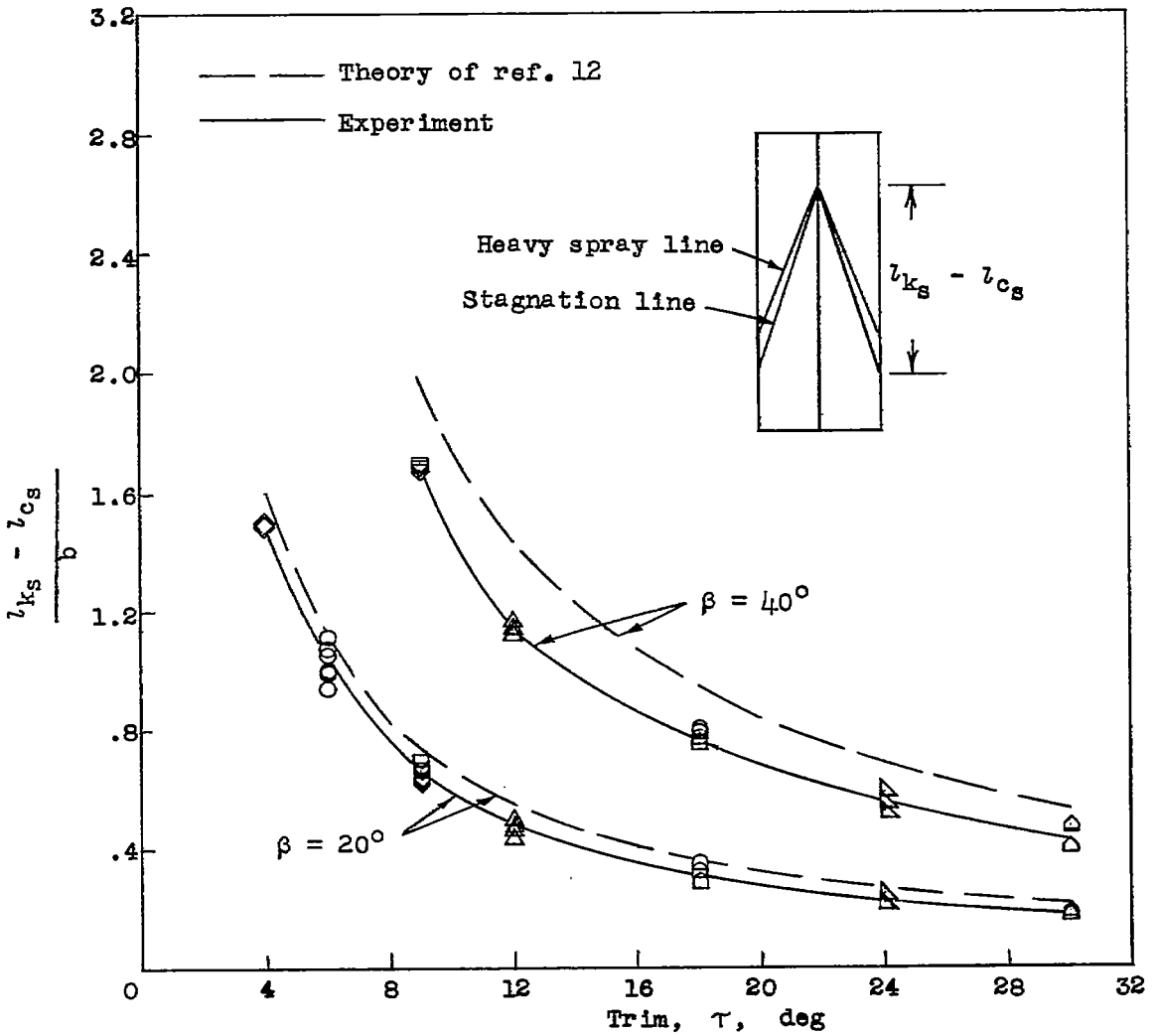

Figure 14.- Comparison of experimental and theoretical stagnation-line location for surfaces having dead-rise angles of 20° and 40°.

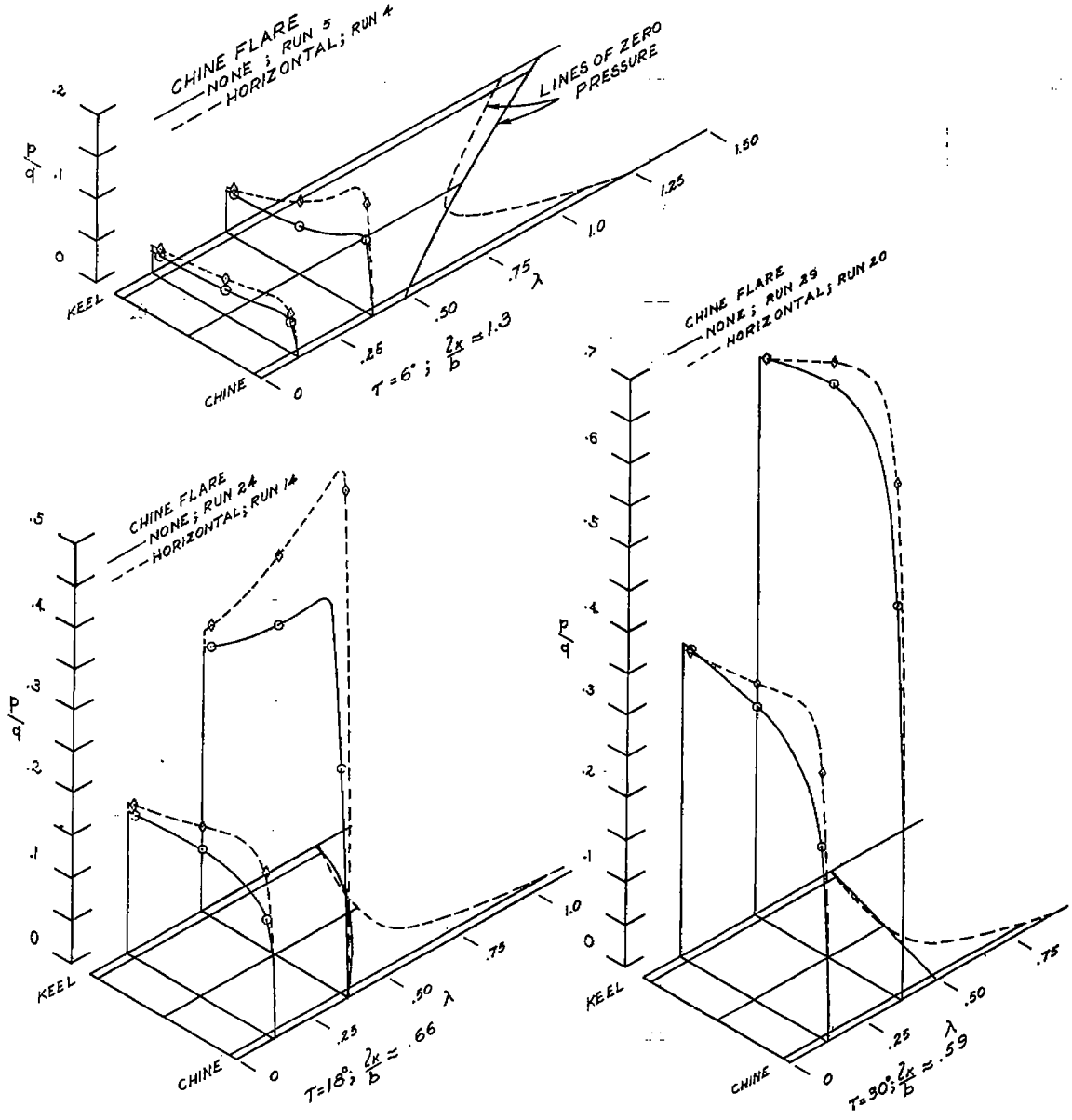

Figure 15.- Effect of horizontal chine flare at various trims on transverse pressure distributions of a 20° angle-of-dead-rise planing surface.

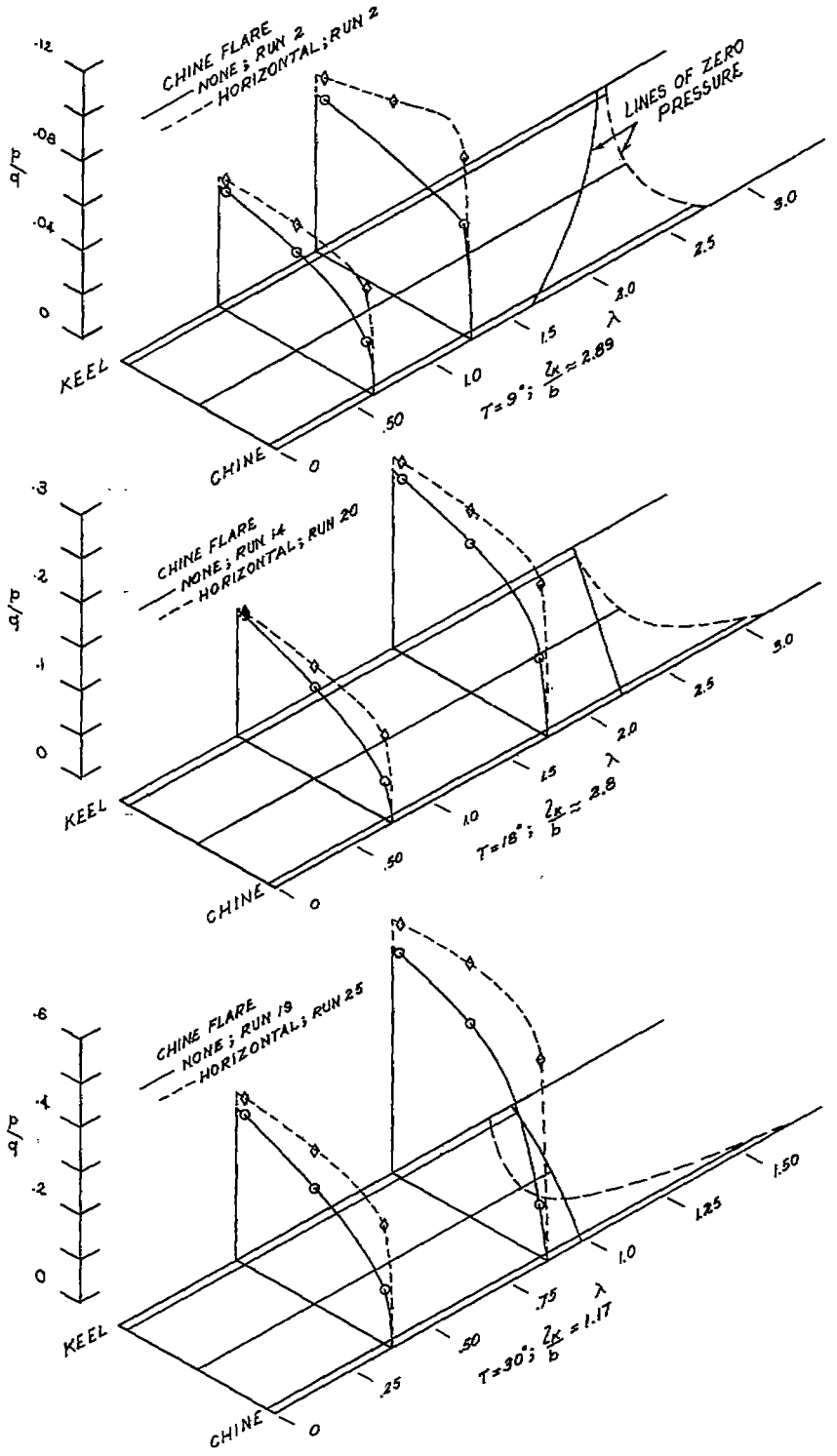

Figure 16.- Effect of horizontal chine flare at various trims on transverse pressure distributions of a 40° angle-of-dead-rise planing surface.

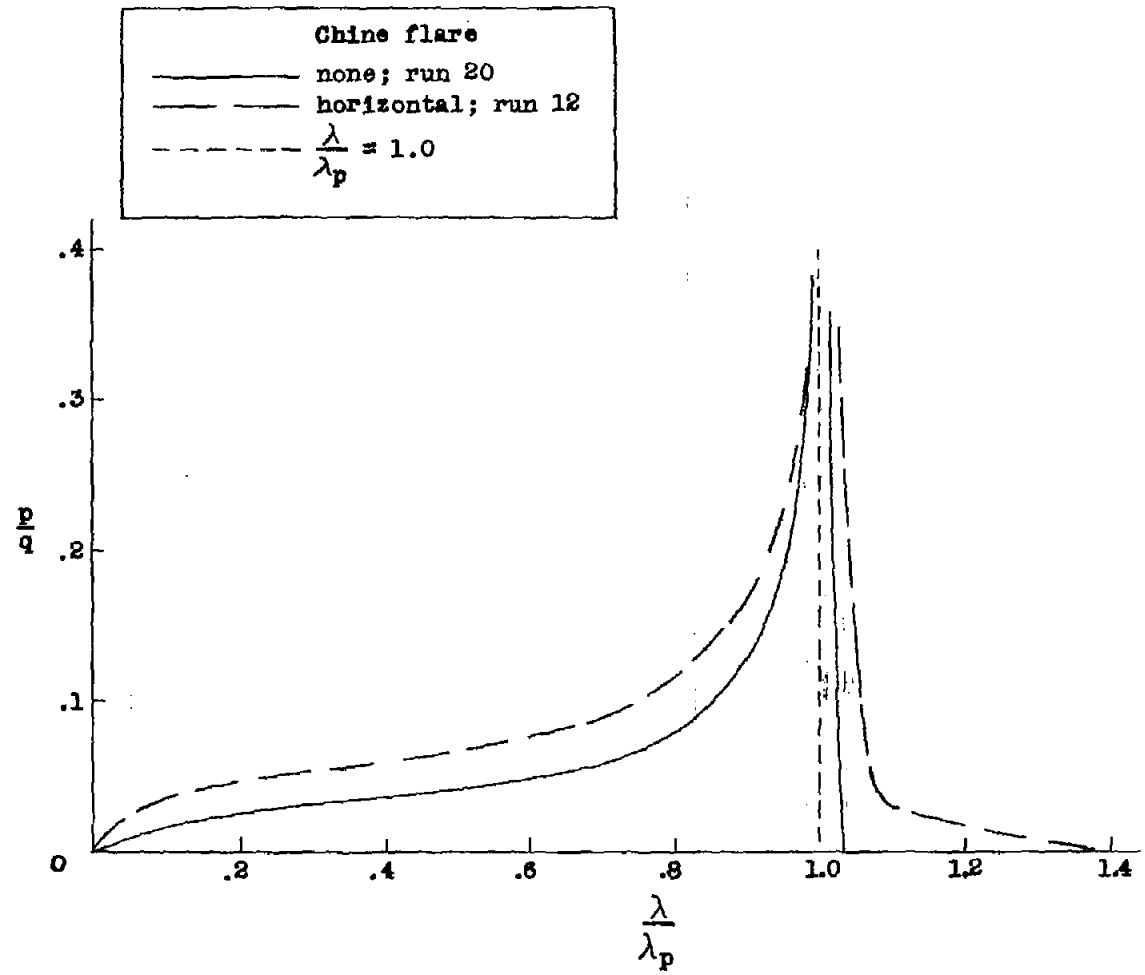

Figure 17.- Comparison of longitudinal pressure distributions along chine buttocks to illustrate extension of positive pressure forward of stagnation point due to horizontal chine flare. $\tau = 12^{\circ}$; $\frac{l_m}{b} = 2.4$; $\beta = 20^{\circ}$.

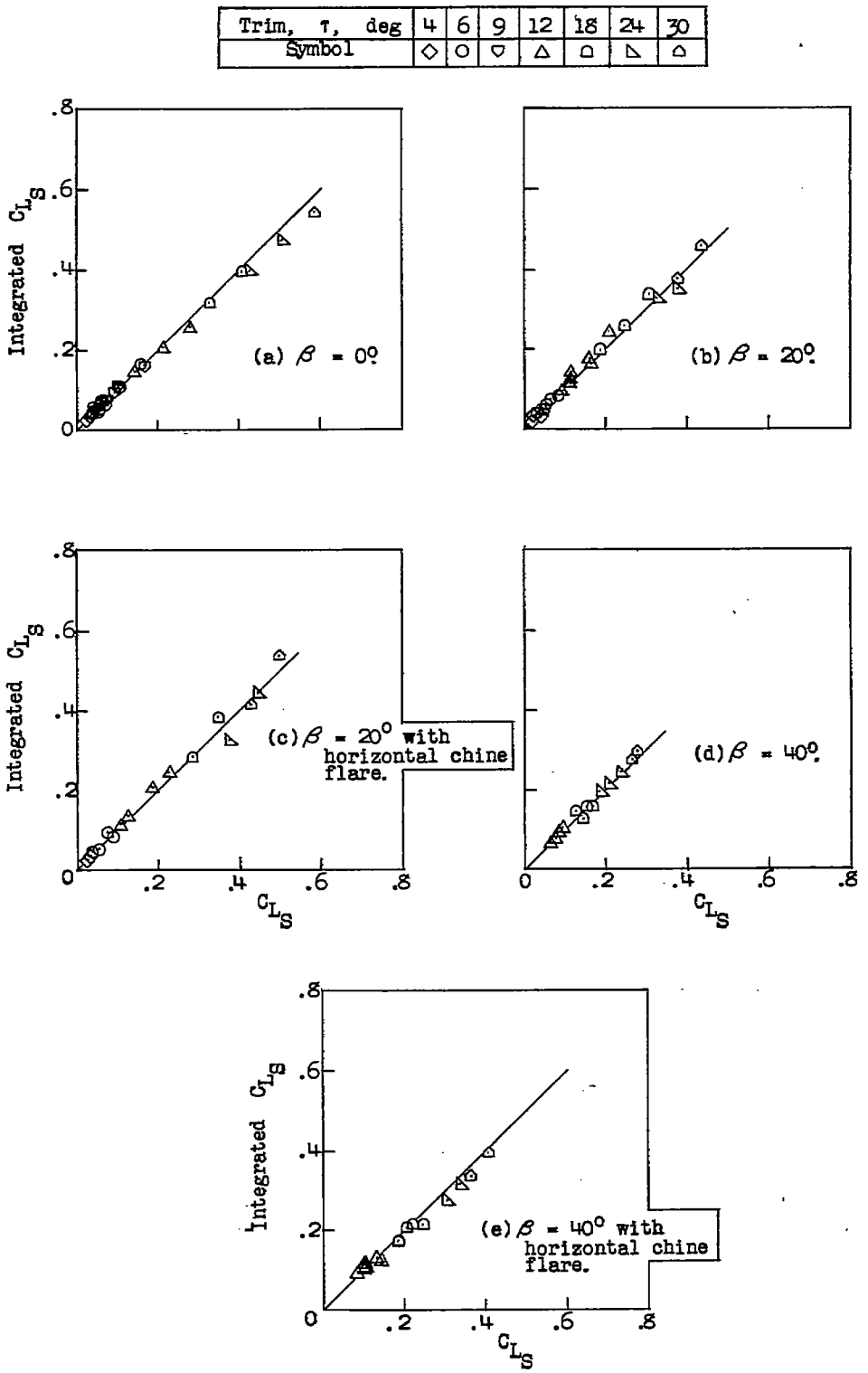

Figure 18.- Comparison of integrated lift coefficients with faired lift curves of references 1 to 5.

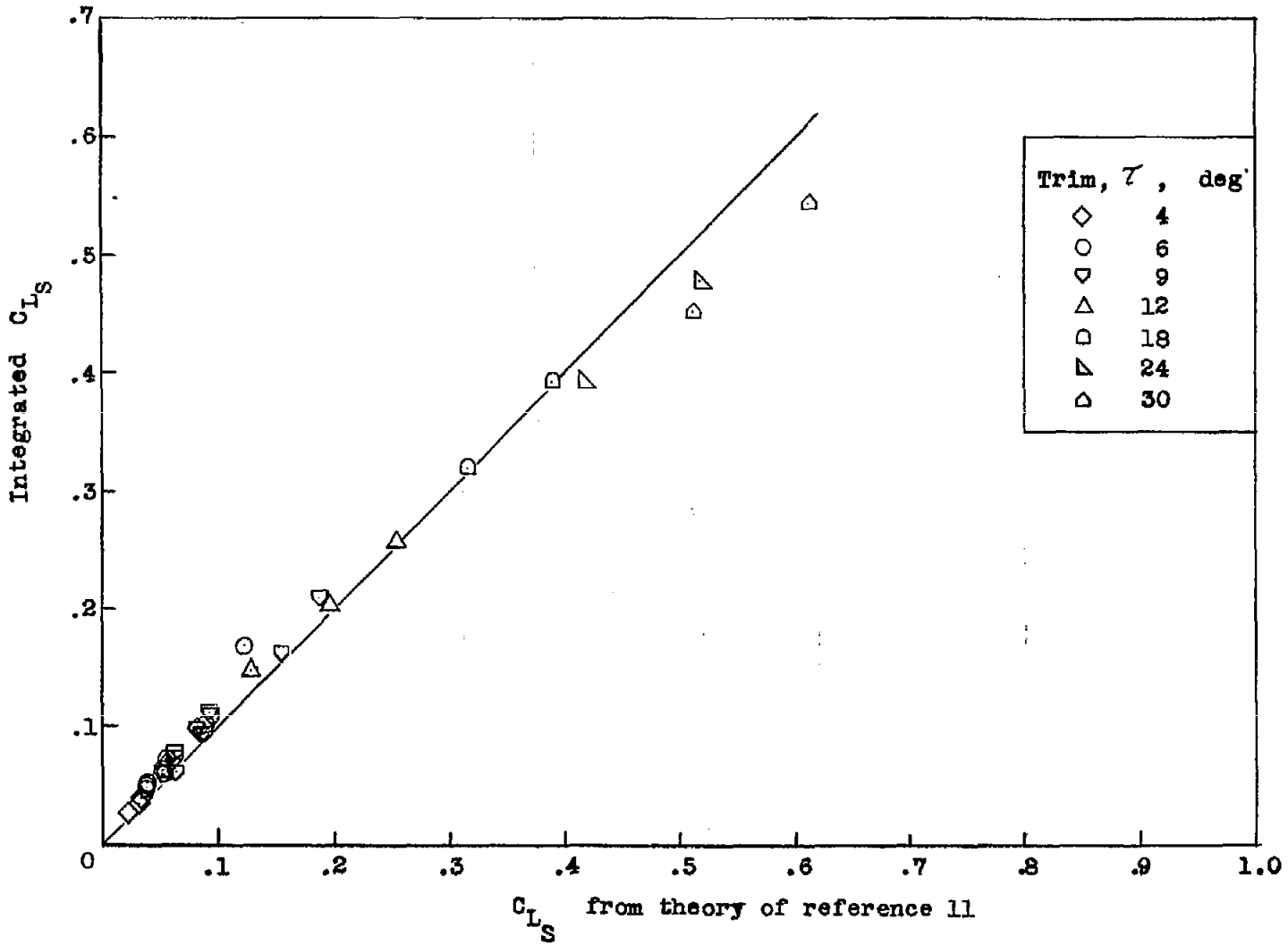

Figure 19.- Comparison of flat-plate experimental and theoretical lift coefficients.

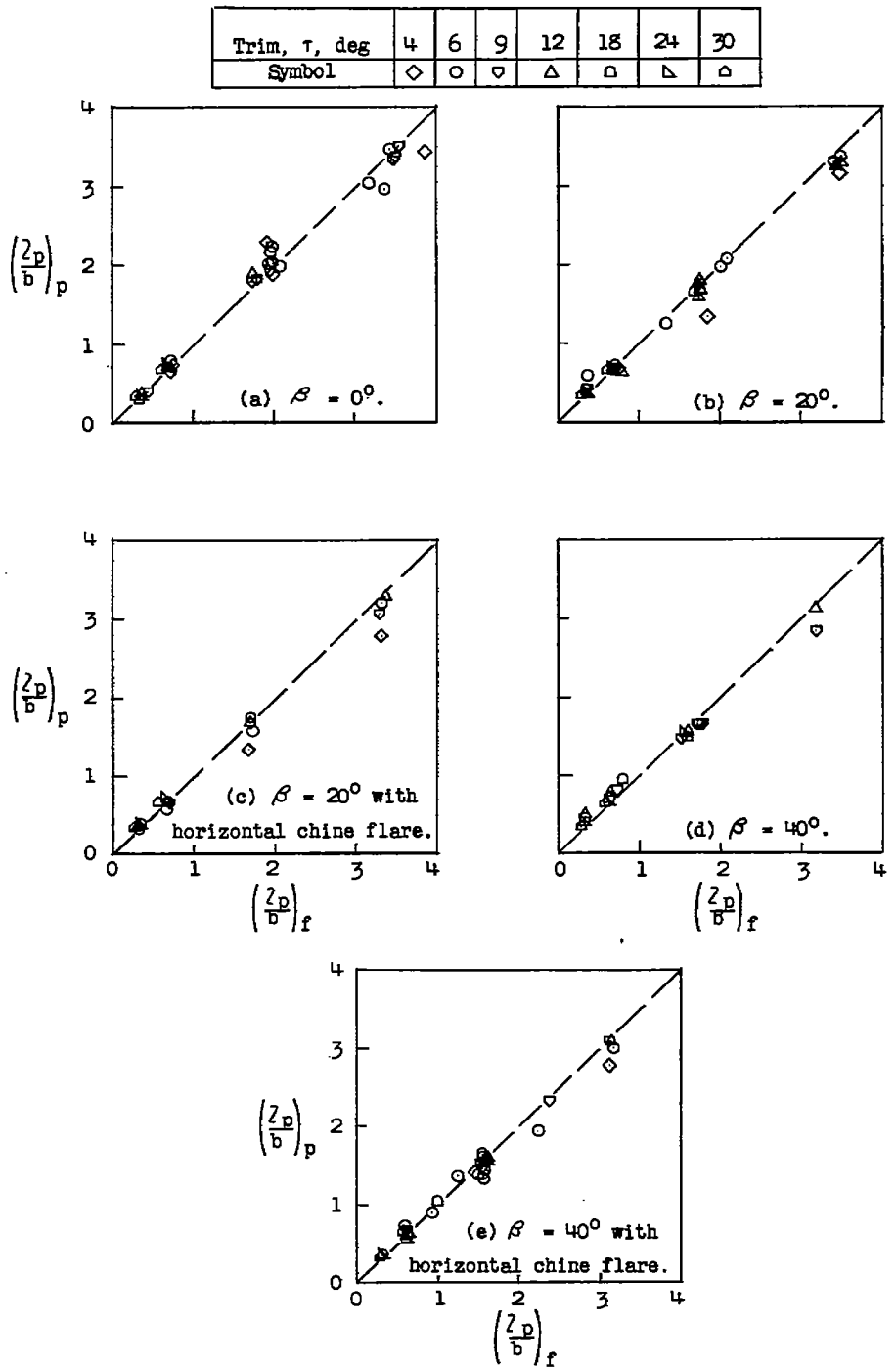

Figure 20.- Comparison of integrated centers-of-pressure location $\left(\frac{l_p}{b}\right)_p$ with faired curves $\left(\frac{l_p}{b}\right)_f$ of references 1 to 5.

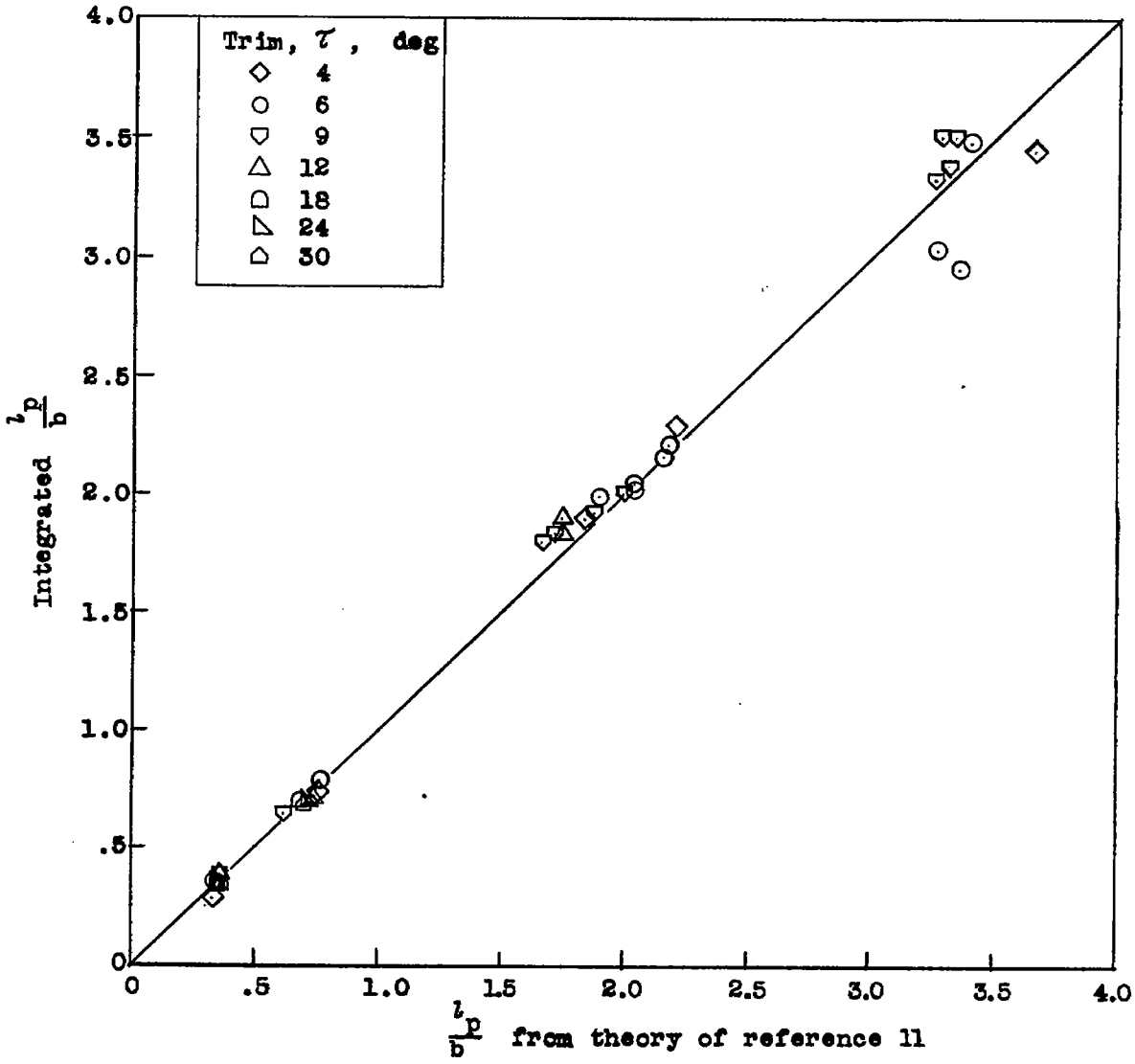

Figure 21.- Comparison of experimental center-of-pressure data for the flat plate with theory of Shuford (ref. 11).