NATIONAL ADVISORY COMMITTEE FOR AERONAUTICS

WARTIME REPORT

ORIGINALLY ISSUED
February 1944 as
Advance Confidential Report 4B29

FLIGHT INVESTIGATION OF BOUNDARY-LAYER CONTROL BY SUCTION SLOTS ON AN NACA 35-215 LOW-DRAG AIRFOIL AT HIGH REYNOLDS NUMBERS

By John A. Zalovcik, J. W. Wetmore,
and Albert E. von Doenhoff

Langley Memorial Aeronautical Laboratory
Langley Field, Va.

NACA

WASHINGTON

NACA WARTIME REPORTS are reprints of papers originally issued to provide rapid distribution of advance research results to an authorized group requiring them for the war effort. They were previously held under a security status but are now unclassified. Some of these reports were not technically edited. All have been reproduced without change in order to expedite general distribution.

3 1176 01363 9795

NATIONAL ADVISORY COMMITTEE FOR AERONAUTICS

ADVANCE CONFIDENTIAL REPORT

FLIGHT INVESTIGATION OF BOUNDARY-LAYER CONTROL BY SUCTION SLOTS ON AN NACA 35-215 LOW-DRAG AIRFOIL AT HIGH REYNOLDS NUMBERS

By John A. Zalovcik, J. W. Wetmore,

and Albert E. von Doenhoff

SUMMARY

An investigation of the effectiveness of suction slots as a means of extending the laminar boundary layer has been made in flight at high Reynolds numbers on an NACA 35-215 airfoil. The test panel, having a chord of 204 inches and an average span of 90 inches, was mounted on the left wing of a Douglas B-18 airplane provided for the tests by the Army Air Corps. The upper surface of the test panel was provided at first with nine spanwise slots and later with eight additional slots, all located between 20 and 60 percent of the chord.

Tests were made with normal operation of the airplane engines over a range of service indicated airspeed from 147 to 216 miles per hour, which gave a range of airplane lift coefficient from 0.41 to 0.19 and a corresponding range of Reynolds number from 21.7×10^6 to 30.8×10^6.

The results of the investigation have shown that with nine slots spaced about 5 percent of the chord the laminar boundary layer on the upper surface could be maintained, by withdrawing air from the boundary layer, to or slightly beyond 45 percent of the chord, or just about to the minimum-pressure point, over a range of airplane lift coefficient from 0.19 to about 0.35 with the corresponding range of Reynolds number from 30.8×10^6 to 23×10^6. Comparison with the results obtained from tests of the unslotted airfoil indicated that laminar flow at 45 percent of the chord represented an increase, attributable to the effect of slots, of at least 5 percent of the chord at a

lift coefficient of 0.21 and a Reynolds number of 29.5×10^6 and at least 12.5 percent of the chord at a lift coefficient of 0.27 and a Reynolds number of 26.5×10^6. The corresponding reductions in the external profile-drag coefficient of the upper surface appeared to be 0.00031 and 0.00065, respectively. These effects were obtained with an expenditure of blower power (blower efficiency assumed equal to propeller efficiency) equivalent to a profile-drag coefficient of 0.00008.

In the tests with the slot spacing reduced to about $2\frac{1}{2}$ percent of the chord, the maximum extent of the laminar layer was not definitely determined; however, it was apparently less for all test conditions than with either the 9-slot arrangement or no slots.

INTRODUCTION

The results of investigations associated with the program of the National Advisory Committee for Aeronautics for the development of low-drag airfoils have indicated that it might be possible, by means of boundary-layer control, to extend the laminar boundary layer beyond the point at which transition normally occurs on this type of airfoil at high Reynolds numbers and thereby further to reduce the profile drag.

Results of a flight investigation of suction slots as a means of extending the laminar boundary layer are presented herein. The tests were made with an NACA 35-215 airfoil section built into a test panel and mounted on the wing of a Douglas B-18 airplane. This test panel is hereinafter designated the NACA 35-215 test panel. The tests covered an approximate range of Reynolds number from 21×10^6 to 31×10^6. The investigation of boundary-layer control by means of suction slots in the NACA two-dimensional low-turbulence tunnel is briefly reviewed in the appendix.

The Douglas B-18 airplane was made available for the tests by the Army Air Corps. The flight tests of this investigation were made early in 1941.

SYMBOLS

H_o	free-stream total pressure, pounds per square foot
p	local static pressure, pounds per square foot
q_o	free-stream dynamic pressure, pounds per square foot
S	pressure coefficient $\left[(H_o - p)/q_o\right]$
C_L	airplane lift coefficient
c	chord of test panel
ν	kinematic viscosity
ρ	density of undisturbed air
V	airspeed, mph $\left(\frac{\sqrt{2q_o/\rho}}{1.467}\right)$
R	Reynolds number $(1.467Vc/\nu)$
d	deflection of curvature gage having legs spaced 4 percent of chord
x	distance along chord from leading edge
s	distance along surface from leading edge
u	velocity inside boundary layer at distance y above surface [illegible]
u_1	velocity in boundary layer at 0.006 inch above surface
U	velocity outside boundary layer
S_p	area of test panel, square feet
H_b	total pressure on intake side of blower, pounds per square foot
Q_n	volume rate of flow through slot n, cubic feet per second

Q total volume rate of flow for first five slots $\left(\sum_{n=1}^{n=5} Q_n\right)$

C_{Q_n} volume coefficient of rate of air intake for slot n $\left(\frac{Q_n}{S_p\sqrt{2q_o/\rho}}\right)$

C_Q volume coefficient of total rate of air intake for first five slots $\left(\frac{Q}{S_p\sqrt{2q_o/\rho}}\right)$

Δc_{d_o} reduction due to slots in external profile-drag coefficient of upper surface of test panel

$c_{d_{o_b}}$ profile-drag coefficient equivalent to power required to discharge at free-stream total pressure air withdrawn from laminar boundary layer $\left(C_Q\frac{H_o - H_b}{q_o}\right)$

Δhp change in engine horsepower due to slots

η_p propeller efficiency

η_b blower efficiency

Subscript:

n slot number (slot 1 nearest leading edge)

APPARATUS

Airplane and Test Panel

The Douglas B-18 airplane used for the tests (fig. 1) was a twin-engine midwing monoplane with a wing area of 958.6 square feet and a design gross weight of 23,200 pounds. The airplane was powered with Wright Cyclone R-1820-45 engines (810 hp at 2100 rpm and 3700 ft) fitted with three-blade propellers having a diameter of 11 feet, 6 inches. A blower rated at 10,000 cubic feet

per minute and 3/4 inch of mercury and an 85-horsepower Ford engine were installed in the bomb bay of the airplane as part of the induction system for boundary-layer control.

A test panel having the NACA 35-215 airfoil section (table I and fig. 2) was mounted on the left wing of the airplane. The chord of the panel was 204 inches and the span tapered from 120 inches at the leading edge to 60 inches at the trailing edge. The panel was constructed of laminated white pine in the form of a hollow shell with walls about 2 inches thick; the outside profile was accurately shaped to a templet.

The panel was supported on the wing by rubber pads running along the top and the bottom of the wing spars and was restrained chordwise and spanwise by means of steel straps. A number of wooden dowel pins extending from the panel shell on the upper surface, through oversize holes in the wing, and into the shell on the lower surface were used to insure maintenance of the correct panel profile. This method of mounting the test panel permitted the airplane wing to bend without deforming the panel. The panel was so located that the inboard end of the leading edge was about 1 foot outboard of the propeller disk, the leading and trailing edges were normal to the plane of symmetry of the airplane, and the plane of the chord lines coincided with the plane of the chord lines of the wing. The panel was faired into the wing by means of fabric stretched taut over wooden framework. The weight of the panel and fairing was 1394 pounds; satisfactory lateral balance for all conditions of flight was obtained by removing all fuel from the left wing tanks and adding 350 pounds of ballast in the right wing tip. Figure 1 shows the test panel mounted on the airplane wing; the dimensions and location of the panel are given in figure 2.

Suction Slots

After boundary-layer and profile-drag tests of the plain panel were completed, boundary-layer suction slots were fitted to the upper surface at various chordwise stations. Nine spanwise slots were at first installed between $x/c = 0.20$ and $x/c = 0.60$; the slot spacings were about 5 percent of the chord. (See table II.) Eight additional slots were later installed, one between each of the previously installed slots (figs. 3, 4(a), and 4(b)).

The outlet orifices of the slots, which were $\frac{1}{4}$-inch holes drilled about $\frac{3}{4}$ inch apart in the wooden panel (fig. 4(c)), opened into fabric ducts that had Venturi tube outlets in a wooden manifold. A round metal duct was used to connect the manifold with the blower in the bomb bay and was equipped with a total-pressure tube located at the center of the end next to the blower to permit a measure of the total pressure ahead of the blower relative to free-stream total pressure. The grouping of the slots and ducts is shown in figure 4(b).

The Venturi tubes were equipped with butterfly valves, manually controlled from the cabin, to regulate the flow of air through individual slots or groups of two or three slots. This arrangement used in conjunction with a throttle control on the blower engine permitted control of the distribution of the rate of intake among the various slots as well as control of the total-intake rate. Static-pressure orifices located in each of the fabric ducts and in the Venturi tubes were used to measure the flow of air through the slots. The static pressure in the fabric ducts was essentially total pressure inasmuch as the velocity in the fabric duct was negligible in comparison with the velocity through the Venturi tubes.

Surface Finish

After installation of the first nine slots, all irregularities in the upper surface were removed by filling and/or sanding and several coats of lacquer-base paint were applied; a final smooth finish was obtained by carefully rubbing the surface parallel to the chord with No. 320 carborundum paper. The resulting surface condition is indicated in figure 5 by a plot of the surface-waviness index d/c, determined from measurements with a curvature gage of the type shown in figure 6, against distance along the surface as a fraction of the chord s/c. Comparison of the surface of the slotted panel with the surface of the unslotted panel having minimum waviness (fig. 7) indicates a slight improvement. It was found, however, that during the tests the metal adapters incorporating the slots were raised or lowered relative to the surface, apparently because of humidity and temperature changes, with the result that frequent sanding and/or filling were necessary to remove the resulting surface discontinuities. The surface condition

of the panel having 17 slots was comparable with that of the panel having 9 slots over the region containing the slots; however, near the leading edge chordwise cracks that could not be kept smooth and unbroken began to appear.

Boundary-Layer Racks

The characteristics of the boundary layer were determined by means of either five-tube or two-tube racks. Each of the five-tube racks consisted of a static-pressure tube and four total-pressure tubes arranged to measure the static pressure just outside the boundary layer and the total pressure close to the surface and at various distances above the surface within the boundary layer; these racks were used to determine the velocity profile of the boundary layer. In cases for which it was desired to determine only the position of transition, the two-tube racks, each consisting of a static-pressure tube located just outside the boundary layer and a total-pressure tube located close to the surface, were used. All pressures were measured by means of a 30-cell NACA multiple recording manometer.

TESTS

Boundary-layer measurements were made on the upper surface of the test panel over a range of service indicated airspeed from 147 to 216 miles per hour, for which the corresponding range of airplane lift coefficient was 0.41 to 0.19 and of Reynolds number was 21.7×10^6 to 30.8×10^6. All tests were made with the airplane engines operating at or near full throttle. The speeds in excess of the top speed of the airplane for level flight were attained in shallow dives.

The tests covered variations in the distribution of the rate of air intake among the various slots and in the total intake through all the slots. The intake distribution generally was adjusted on the ground by means of the butterfly valves in the Venturi tubes to approximate one of three arbitrary conditions: uniformly increasing rate of intake from the foremost to the rearmost slot, equal intake through all the slots, or uniformly decreasing intake from the foremost to the rearmost slot.

During flight, control of the rate of flow through the slots was confined in most cases to the control obtained by varying the throttle setting of the blower engine. With this procedure, however, the slot-intake distributions in flight, although very nearly the same for highest intake rates as those obtained on the ground, varied considerably with intake rate, owing to the influence of the varying external pressure over the panel surface (fig. 8). In a test at a given airspeed and slot-intake distribution, the air-intake rate was adjusted initially to a high or low value. After steady conditions were attained, measurements were made. The air-intake rate was then successively changed (decreased or increased depending on whether the rate was initially high or low) to a new value and each time allowed to become steady before measurements were made.

Boundary-layer measurements with the 9-slot arrangement were made with five-tube racks at the following locations: $x/c = 0.45$, 12 inches outboard of the panel center line; $x/c = 0.495$, on the center line; and $x/c = 0.535$, 12 inches inboard of the center line. For the tests of the panel with 17 slots, a rack was located slightly behind each group of slots having a common outlet duct. The locations were as follows: two-tube rack at $x/c = 0.24$, 36 inches outboard of the center line; two-tube rack at $x/c = 0.33$, 24 inches outboard; five-tube rack at $x/c = 0.41$, 13 inches outboard; five-tube rack at $x/c = 0.495$, 3 inches outboard; five-tube rack at $x/c = 0.55$, 6 inches inboard; and five-tube rack at $x/c = 0.59$, 16 inches inboard. (See fig. 3.)

RESULTS AND DISCUSSION

The results of the flight investigation of boundary-layer control on the NACA 35-215 test panel with nine suction slots are summarized in figure 9. The plots include the chordwise distribution of the coefficient of the rate of air intake C_{Q_n}, the variation of boundary-layer velocity close to the surface u_1/U with the coefficient of total rate of intake through the first five slots C_Q, boundary-layer velocity profiles, and the variation with C_Q of the profile-drag coefficient equivalent to the power required to discharge at free-stream total pressure the air withdrawn from the boundary

layer $c_{d_{o_b}}$. The data for a given value of C_Q at a given flight condition are correlated by use of the same symbol. The arrows on the plot of u_1/U against C_Q indicate the order in which the test points were obtained. Inasmuch as $x/c = 0.45$ was the rearmost station at which positive effects due to the slots were observed, only the boundary-layer characteristics at this station and the flow through the five slots forward of this station are considered in figure 9.

It was found that the air-intake distributions for the highest total-intake rates conformed fairly closely to the nominal distributions for which the controls were set on the ground. For the lower intake rates, however, the distribution was considerably affected by the chordwise pressure variation over the panel surface; that is, the lower external pressures at the rearward slots (approaching the minimum-pressure point) caused a reduction in the rate of flow through these slots relative to the rate through the forward slots.

The character of the boundary layer at $x/c = 0.45$ corresponding to the various slot-flow conditions is defined in figure 9 by the magnitude of the ratio u_1/U, where u_1 was measured 0.006 inch from the surface (values of the order of 0.2 indicate laminar flow and values of the order of 0.4 indicate turbulent flow), and by the boundary-layer profiles. With a value of C_Q as low as 5.0×10^{-5}, laminar flow was maintained to at least $x/c = 0.45$ over a range of airplane lift coefficient from 0.19 to 0.35 and a corresponding range of Reynolds number from 30.8×10^6 to 23×10^6. In order to obtain these results, it was apparently necessary that the coefficient of the intake rate should be at least 1.7×10^{-5} through slot 1 and should thence decrease to almost zero at slot 5 just forward of $x/c = 0.45$. Further reduction in the throttle setting to the point where the flow through slot 5 reversed (indicated by negative values of C_{Q_n} in fig. 9) resulted in a fairly abrupt transition to turbulent flow.

Increasing the total-intake rate above the minimum value required to sustain laminar flow to $x/c = 0.45$ had no apparent beneficial effect on the extent of the laminar layer but appreciably reduced the thickness of

the boundary layer, as indicated by the velocity profiles of figure 9. For the intake distributions which gave laminar flow at $x/c = 0.45$ - that is, with the intake rate approximately the same for all slots or decreasing from the forward to the rearward slots - there was a fairly definite upper limit to the permissible intake rate. When the coefficient of the rate of flow through slot 1 exceeded about 3.5×10^{-5}, transition to turbulent flow occurred, apparently regardless of the flight condition. With the intake rate increasing toward the rearward slots, the boundary layer was fully turbulent at $x/c = 0.45$ for all the flight conditions tested. The laminar boundary layer apparently never extended much beyond $x/c = 0.45$ for any of the test conditions, as in all cases the measurements at $x/c = 0.495$ revealed fully developed turbulent flow. The position of transition appeared to move forward with increasing lift coefficient, as is indicated at $x/c = 0.45$ by the fully laminar boundary layer at lift coefficients of about 0.19 to 0.23 (figs. 9(a), 9(c), 9(d), and 9(e)), by the transitional character of the boundary layer at lift coefficients of about 0.28 to 0.35 (figs. 9(f) and 9(g)) and by the turbulent boundary layer at a lift coefficient of about 0.41 (fig. 9(h)).

It is pointed out that, although the test-panel surface with the slots installed was initially smooth, during the course of the investigation the metal strips containing the slots were almost continually being raised or lowered from their flush position in the panel surface, apparently because of variations in temperature and humidity, which caused abrupt discontinuities of as much as 0.004 inch in depth. Inasmuch as these changes occurred to some extent during practically every flight, it is possible that the test results were somewhat affected thereby. Some such effect is indicated in figures 9(a) and 9(b), which present the results for the first and third runs, respectively, of one flight. Laminar flow was obtained at $x/c = 0.45$ during the first run (fig. 9(a)); whereas throughout the third run (fig. 9(b)), made under ostensibly the same conditions, the flow was turbulent at the same station.

The results of tests of the panel without slots for nearly the same surface (fig. 7) and engine operating conditions as for the tests with slots showed that the position of transition on the upper surface varied from $x/c = 0.40$ to $x/c = 0.325$ as the airplane lift

coefficient varied from about 0.21 to 0.27. Over this same range of lift coefficient, transition or laminar flow was obtained at $x/c = 0.45$ by the use of suction slots. The suction slots consequently appear to have increased the extent of the laminar boundary layer by at least 0.05c at $C_L = 0.21$ and $R = 29.5 \times 10^6$ and by at least 0.125c at $C_L = 0.27$ and $R = 26.5 \times 10^6$; the gain apparently increased as the lift coefficient was increased. That this gain is not due to a difference in Reynolds number between the two series of tests may be seen in figure 10, in which the flight conditions for the present tests are shown to be practically the same as for the tests of the panel without slots.

The net reduction in profile-drag coefficient obtained with suction slots has been determined from the measurements of boundary-layer characteristics and chordwise pressure distribution on the upper surface of the test panel with and without slots and from the measurements of volume of air withdrawn from the boundary layer and the measurements of total pressure ahead of the blower referenced to free-stream total pressure. The profile-drag coefficients of the upper surface of the test panel with and without slots were computed by the method of reference 1, which involves the use of the measured chordwise pressure distribution, the measured position of transition, and the measured velocity profiles of the laminar boundary layer at the position of transition.

The results of the computations indicated reductions in the external profile-drag coefficient of the upper surface, due to the slots, of the order of 0.00031, 0.00042, and 0.00065 at airplane lift coefficients of about 0.21, 0.25, and 0.27, respectively. These reductions in external profile-drag coefficient were obtained at a cost represented by the profile-drag coefficient

$$c_{d_{o_b}} = C_Q \left(\frac{H_o - H_b}{q_o}\right)$$

which is equivalent to the power required to discharge at free-stream total pressure the air withdrawn from the laminar boundary layer. From figure 9 it may be seen that the value of $c_{d_{o_b}}$ at which transition at

$x/c = 0.45$ may be obtained is, in general, of the order of 0.00008; the net reductions in the profile-drag coefficients of the upper surface at airplane lift coefficients of about 0.21, 0.25, and 0.27 are therefore 0.00023, 0.00034, and 0.00057, or 9, 12, and 19 percent, respectively. The net reductions thus determined may be obtained with a blower efficiency equal to the airplane propeller efficiency, as may be seen from the following considerations of change in engine horsepower:

$$\Delta hp = \frac{S_p q_o V}{550}\left(\frac{\Delta c_{d_o}}{\eta_p} - \frac{c_{d_{o_b}}}{\eta_b}\right)$$

If $\eta_b = \eta_p$,

$$\Delta hp = \frac{S_p q_o V}{550\eta_p}\left(\Delta c_{d_o} - c_{d_{o_b}}\right)$$

where $\Delta c_{d_o} - c_{d_{o_b}}$ is the net reduction in profile-drag coefficient as determined by the method described in the preceding paragraph.

In the tests with the slot spacing reduced to about 0.025c, the maximum extent of the laminar layer was not definitely determined; however, it was apparently less for all test conditions than with either the 9-slot arrangement or no slots. There is a possibility that the results with the 17-slot arrangement were adversely affected to some extent by several small chordwise cracks near the leading edge of the panel which did not appear during the tests of the 9-slot arrangement.

CONCLUSIONS

The results of the flight investigation of suction slots on the upper surface of the NACA 35-215 airfoil showed that, with a slot spacing of about 5 percent of the chord, the laminar boundary layer could be maintained to or slightly beyond 45 percent of the chord, or just about to the minimum-pressure point, over a range of airplane lift coefficient from 0.19 to about 0.35 with a

corresponding range of Reynolds number from 30.8×10^6 to 23×10^6. Comparison with the results obtained from tests of the unslotted airfoil indicated that laminar flow at 45 percent of the chord represented an increase, attributable to the effect of slots, of at least 5 percent of the chord at a lift coefficient of 0.21 and a Reynolds number of 29.5×10^6 and at least 12.5 percent of the chord at a lift coefficient of 0.27 and a Reynolds number of 26.5×10^6. The corresponding reductions in the external profile-drag coefficient of the upper surface appeared to be 0.00031 and 0.00065, respectively. These effects were obtained with an expenditure of blower power (blower efficiency assumed equal to propeller efficiency) equivalent to a profile-drag coefficient of 0.00008.

In the tests with the slot spacing reduced to about $2\frac{1}{2}$ percent of the chord, the maximum extent of the laminar layer was not definitely determined; however, it was apparently less for all test conditions than with either the 9-slot arrangement or no slots.

Langley Memorial Aeronautical Laboratory,
National Advisory Committee for Aeronautics,
Langley Field, Va.

APPENDIX

TESTS OF SLOTS FOR CONTROL OF LAMINAR BOUNDARY LAYER IN NACA TWO-DIMENSIONAL LOW-TURBULENCE TUNNEL

In early tests in the NACA two-dimensional low-turbulence tunnel (see reference 2) it was observed that, at high Reynolds numbers, the minimum drag coefficient of low-drag sections increased with Reynolds number and that this increase was always connected with a corresponding decrease in the extent of the laminar boundary layer. There were some indications that transition tended to occur at a fixed value of the boundary-layer Reynolds number.

In order to reduce the thickness of the laminar layer and thereby to decrease the boundary-layer Reynolds number and to increase the extent of the laminar region, a wind-tunnel investigation was made of the effect of suction slots on the laminar layer and of the possibility of delaying transition by the use of such slots. Tests were run to determine suitable slot shapes and dimensions and to determine whether the extent of the laminar region could be increased.

The investigation was carried out in the NACA two-dimensional low-turbulence tunnel. This tunnel has a section 3 feet wide and $7\frac{1}{2}$ feet high and is designed to test models in two-dimensional flow. At the time these tests were made (1939) the turbulence level of the tunnel, although extremely low, was high enough to cause premature transition when compared with results of flight tests. The turbulence level of the tunnel has since been considerably reduced.

Several types of slot were tested to find one that showed satisfactory characteristics over a fairly wide range of operating conditions. Figure 11 shows the slots investigated. The operation of the slots was checked by boundary-layer surveys and drag measurements.

Slot A was tested with values of the height h varying from 1/16 to 1/64 inch. Although laminar flow could be maintained with this type of slot, the flow rate and power required were large. In addition, control was uncertain at high tunnel speeds.

Slot B was tested with the diameter d of the holes varying from 0.025 to 0.045 inch. The holes in the two rows were staggered and spaced 1/8 inch. A layer of 60-mesh screening over the slot was also tried. In all cases either transition occurred immediately at the slot or control was extremely critical to flow rate and airspeed.

The most successful type tested was slot C. The width w was varied from 1/16 to 1/64 inch, and the radii r_1 and r_2 were varied from zero to a length equal to the width of the slot. The tests showed that slots wider than 1/32 inch were apparently too large a fraction of the boundary-layer thickness because the laminar flow broke down at the slot for flow rates outside a fairly narrow range. Slots of $\frac{1}{32}$-inch width or less showed satisfactory operating characteristics over a wide range of flow rate. The pressure drop through the slot was considerably greater for the $\frac{1}{64}$-inch width than for the $\frac{1}{32}$-inch width. Variations in the radii r_1 and r_2 showed little effect. It was felt, however, that more stable operation would result if r_1 were zero and r_2 were approximately equal to the width of the slot. The slot $\frac{1}{32}$ inch wide having $r_1 = 0$ and $r_2 = \frac{1}{32}$ inch was therefore chosen for further investigation.

Tests were made in the NACA two-dimensional low-turbulence tunnel with a series of slots having $w = r_2 = 1/32$ inch and $r_1 = 0$ in a favorable pressure gradient and in an adverse gradient to determine whether the region of laminar flow could be extended. For the favorable gradient, it was found that laminar flow could be maintained over a length corresponding to a Reynolds number higher than 10×10^6 with a series of six slots whereas transition occurred on the same model at a length corresponding to a Reynolds number of approximately 5×10^6 without the slots. There were indications that the extent of the laminar region was limited at the point corresponding to a Reynolds number of 10×10^6 because

of the spread of turbulence from the walls of the tunnel and not because of any disturbance due to the slots. Investigation in an adverse pressure gradient showed that laminar separation could be delayed by the use of slots.

Because the speed of the B-18 airplane is approximately twice the speed at which the wind-tunnel investigation was carried out, the boundary-layer thickness for the same boundary-layer Reynolds number is only one-half as large as that observed in the tunnel. The dimensions used in the flight investigation were consequently one-half those tested in the NACA two-dimensional low-turbulence tunnel; that is, w was 1/64 inch and r_1 and r_2 were zero.

REFERENCES

1. Squire, H. B., and Young, A. D.: The Calculation of the Profile Drag of Aerofoils. R. & M. No. 1838, British A.R.C., 1938.

2. Jacobs, Eastman N.: Preliminary Report on Laminar-Flow Airfoils and New Methods Adopted for Airfoil and Boundary-Layer Investigations. NACA A.C.R., June 1939.

TABLE I

ORDINATES OF NACA 35-215 AIRFOIL
[All values in percent of chord]

Upper surface		Lower surface	
x	y	x	y
0	0	0	0
1.085	1.857	1.415	-1.563
2.037	2.619	2.693	-2.101
4.766	3.674	5.214	-2.792
7.278	4.510	7.722	-3.322
9.777	5.211	10.223	-3.759
14.788	6.344	15.212	-4.448
19.809	7.221	20.191	-4.973
24.838	7.899	25.162	-5.375
29.873	8.416	30.127	-5.680
34.913	8.774	35.087	-5.888
39.958	8.961	40.042	-5.989
50.077	8.702	49.923	-5.762
60.150	7.265	59.850	-4.703
70.137	5.277	69.863	-3.295
80.086	3.123	79.914	-1.817
85.056	2.028	84.944	-1.140
90.029	1.175	89.971	-.561
95.009	.436	94.991	-.148
100.000	0	0	0

TABLE II

LOCATION OF SLOTS ON UPPER SURFACE
OF NACA 35-215 TEST PANEL -
9-SLOT ARRANGEMENT

Slot	Slot location (percent chord)
1	20.0
2	25.7
3	31.6
4	37.0
5	42.3
6	48.0
7	52.2
8	56.0
9	60.0

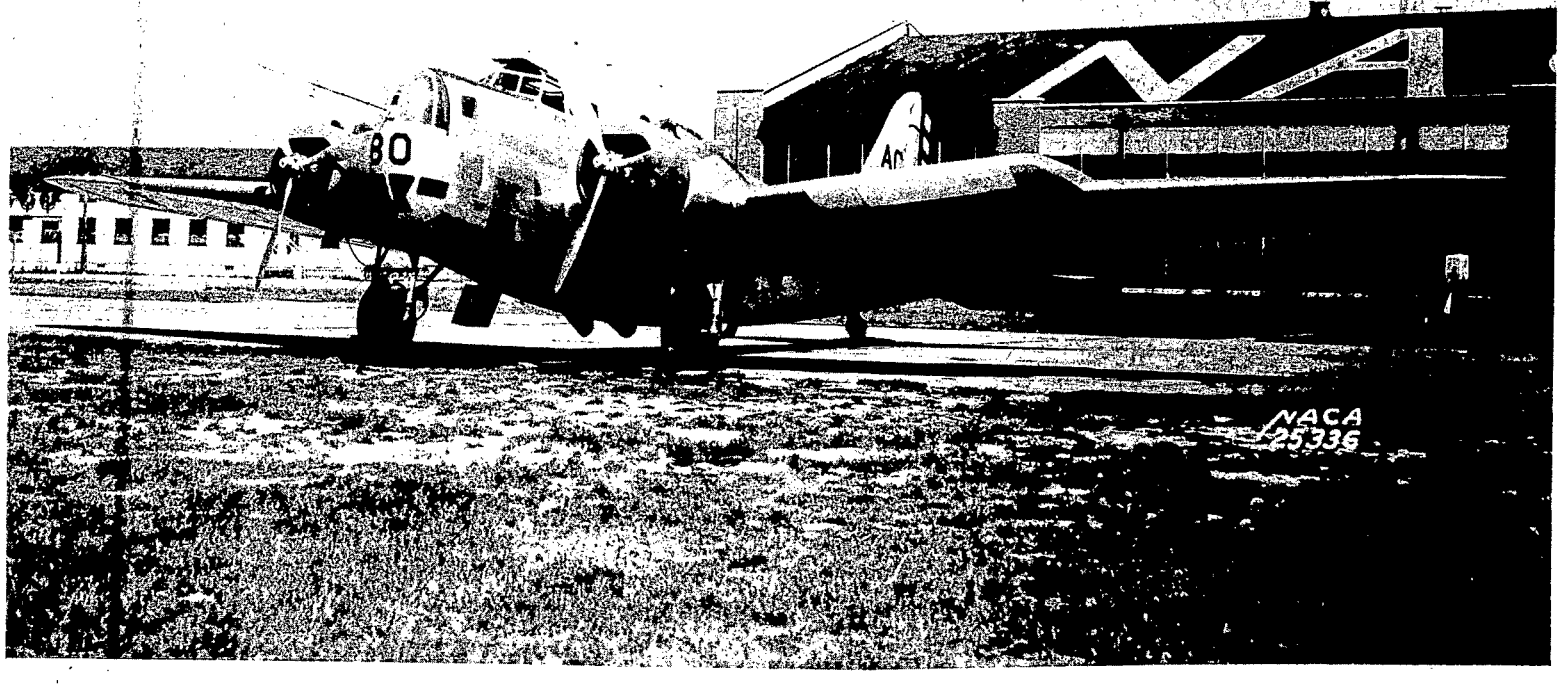

Figure 1.- The NACA 35-215 test panel mounted on wing of Douglas B-18 airplane.

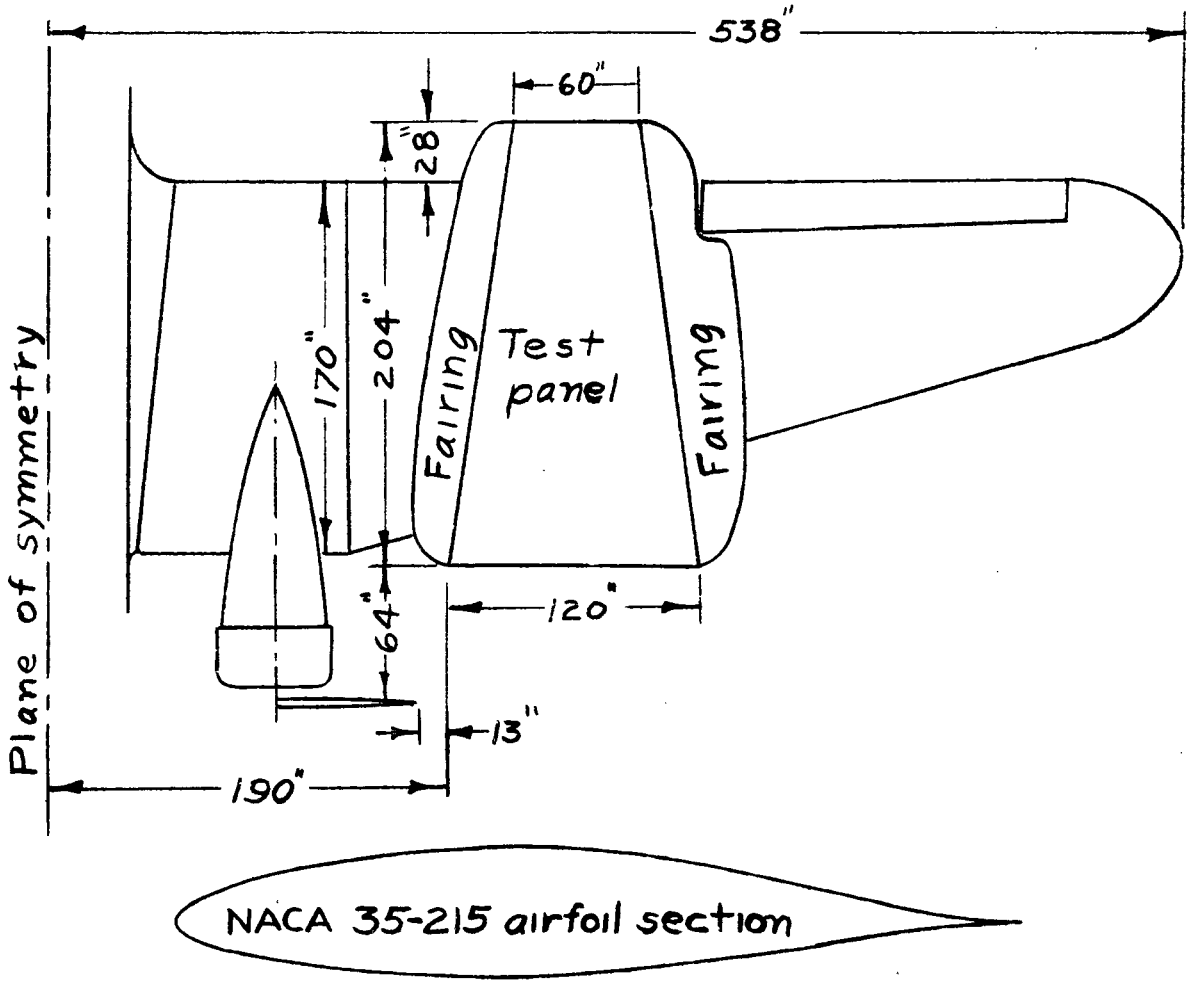

Figure 2.- Sketch showing position of test panel on wing of Douglas B-18 airplane and profile of NACA 35-215 airfoil section.

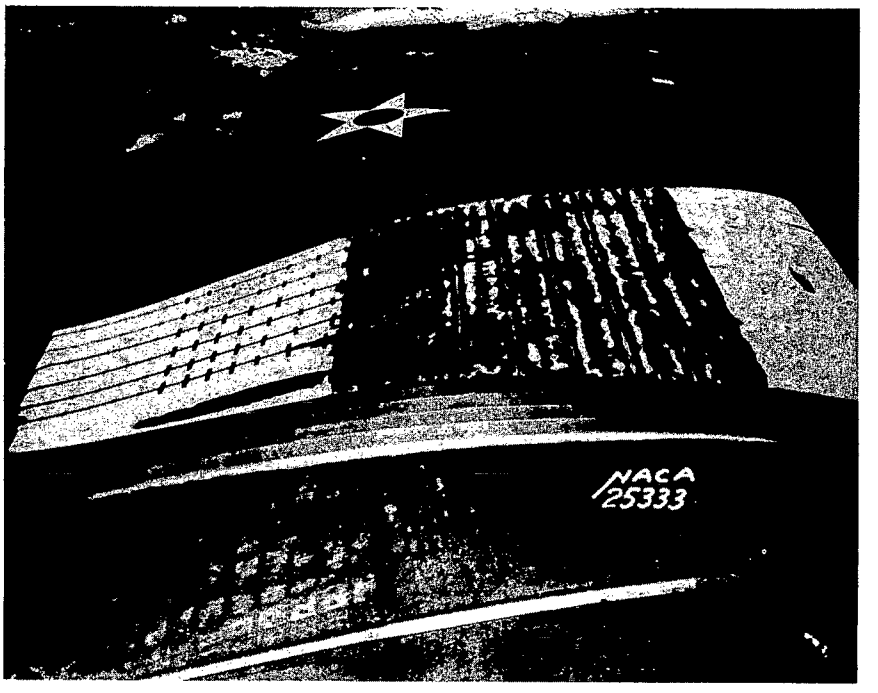

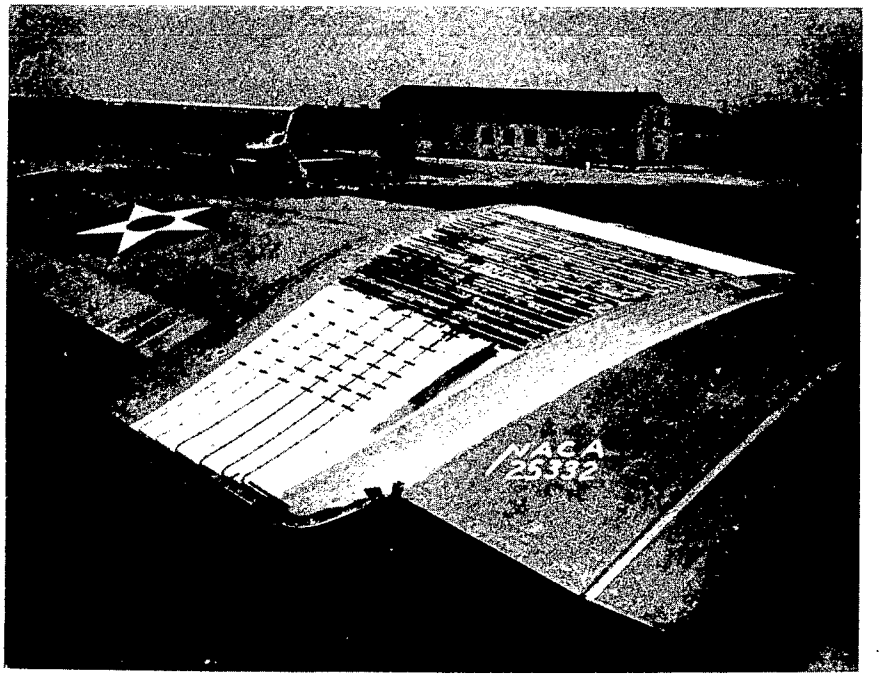

Figure 3.- The NACA 35-215 test panel with 17-slot arrangement. Boundary-layer racks shown attached with tape surface.

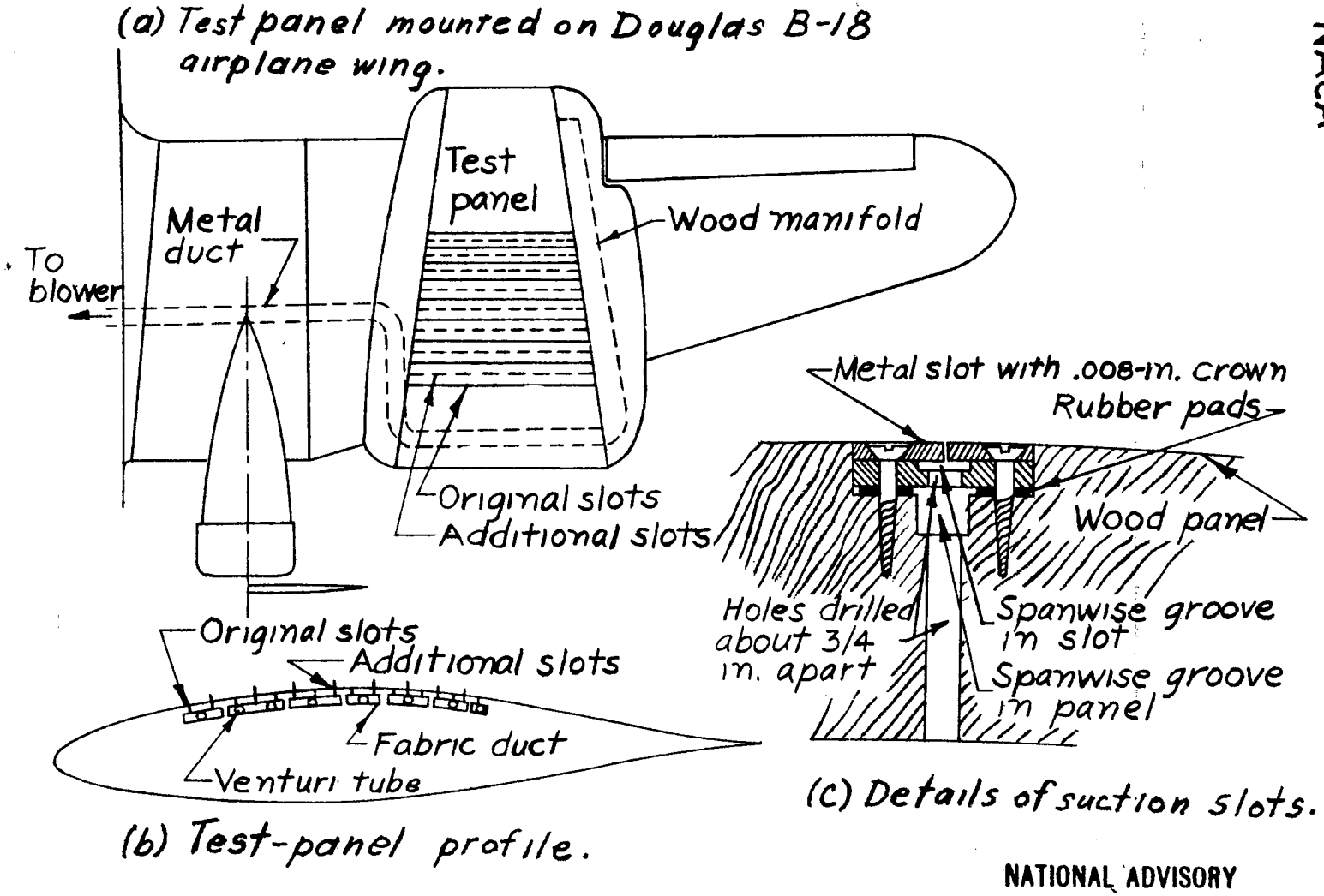

NATIONAL ADVISORY
COMMITTEE FOR AERONAUTICS

Figure 4.- Induction system for boundary-layer control on NACA 35-215 test panel.

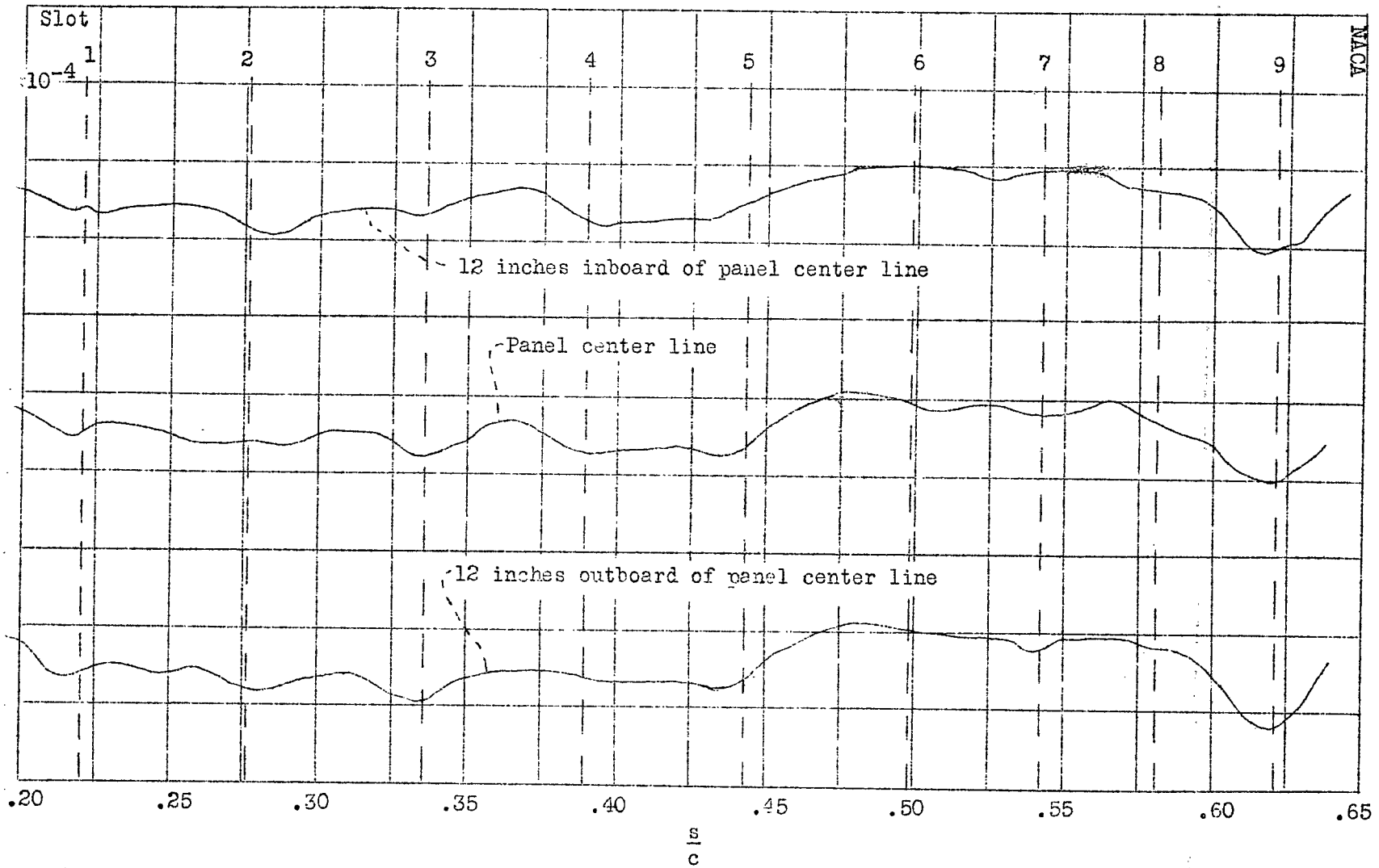

ure 5.- Surface-waviness index for upper surface of NACA 35-215 test panel equipped with 9 suction slots. Position of slots indicated by vertical lines.

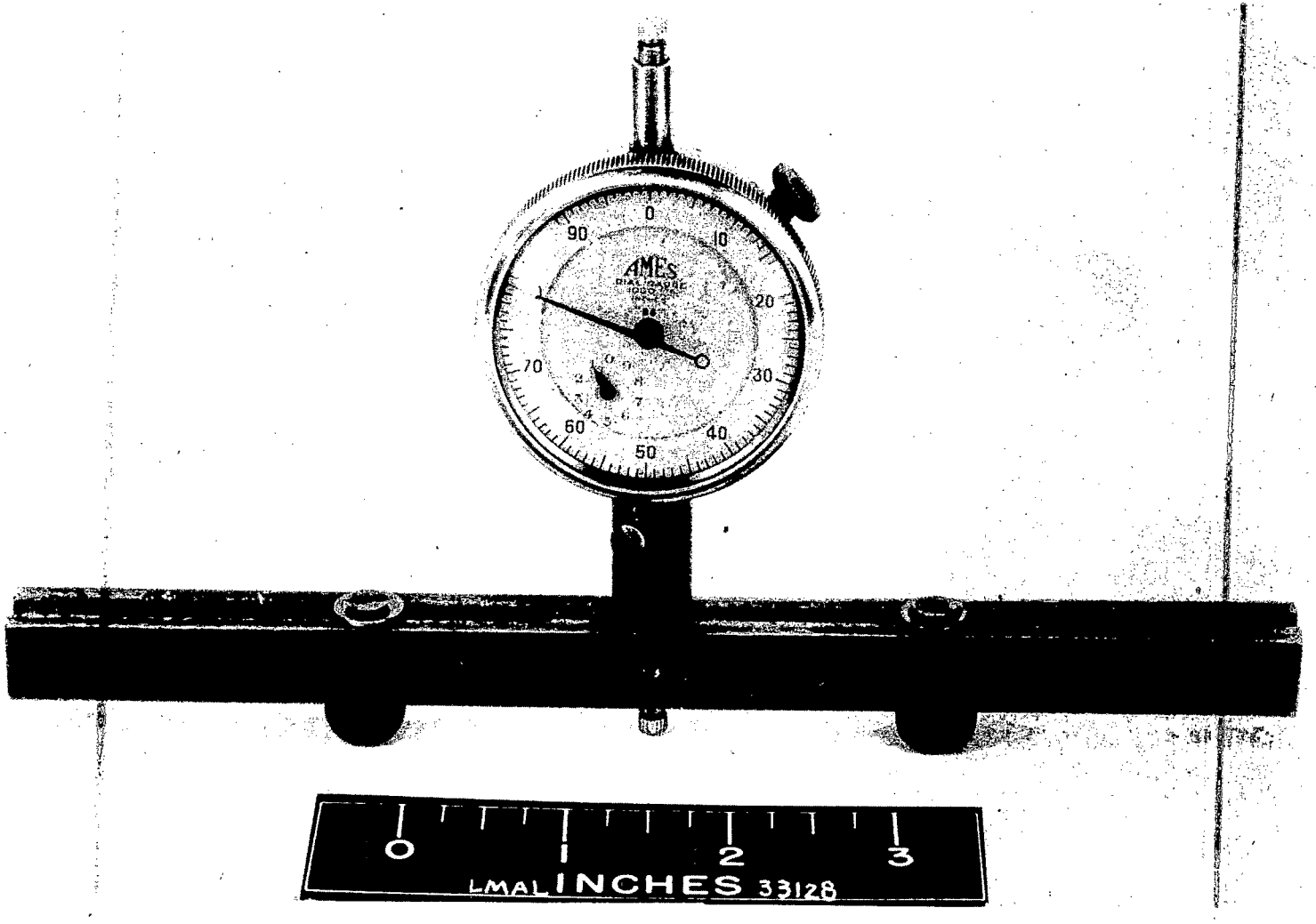

Figure 6.- Curvature gage.

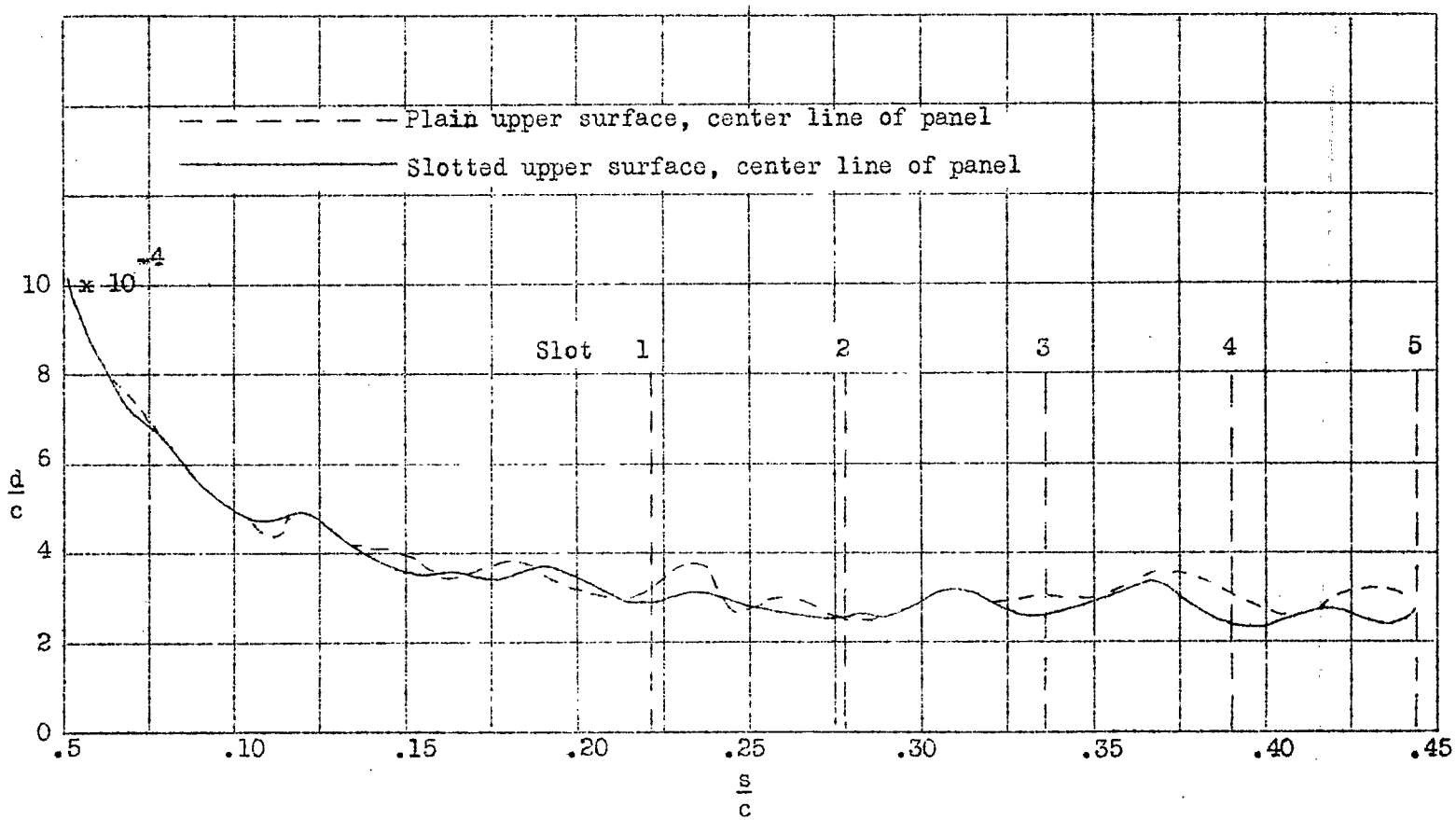

Figure 7.- Comparison of surface-waviness index for best surface condition of the unslotted NACA 35-215 test panel with the surface-waviness index for the test panel equipped with 9 slots.

L-521

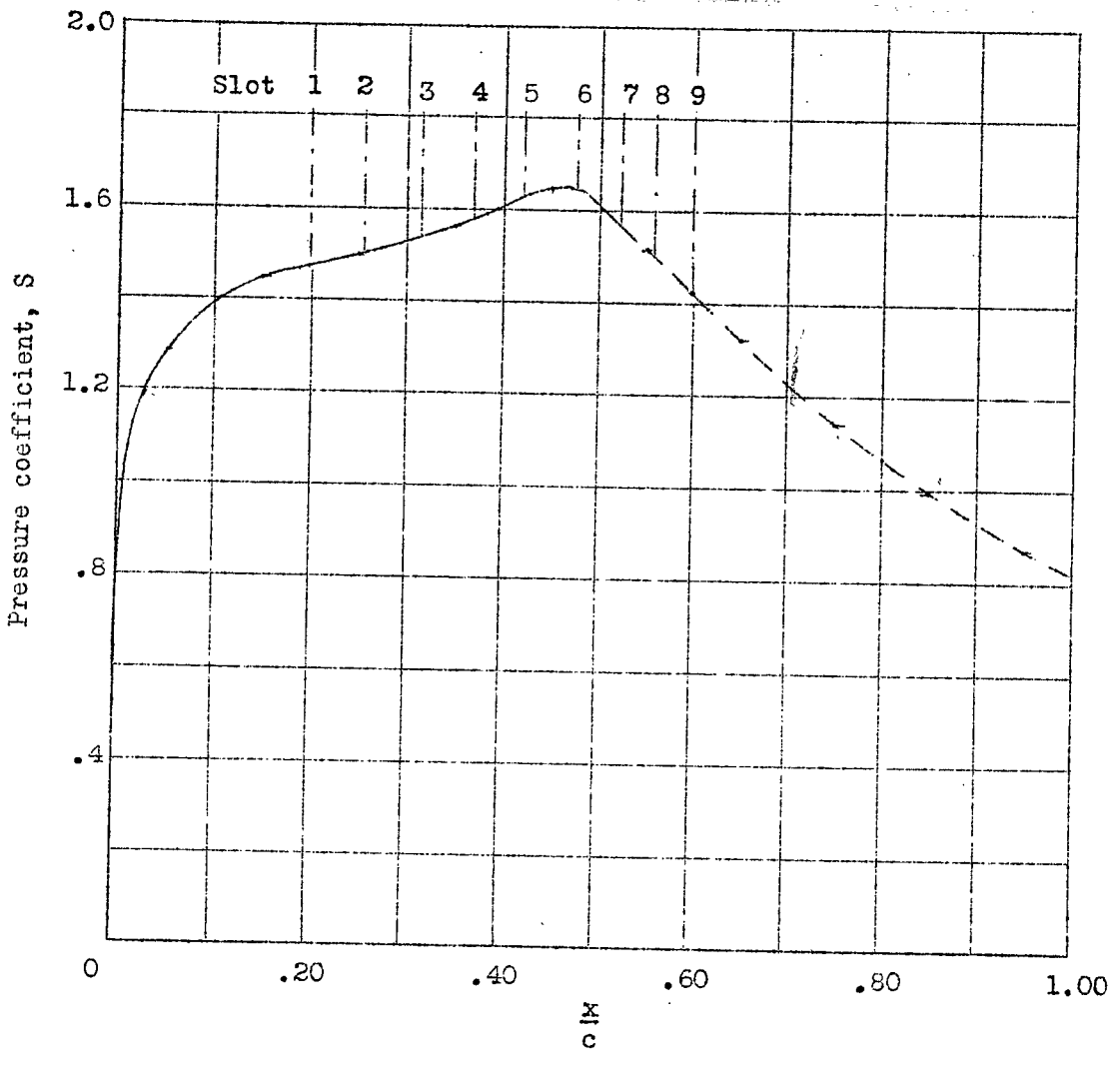

Figure 8.- Pressure distribution on upper surface of NACA 35-215 test panel. $C_L = 0.24$; $V = 229$ mph. Vertical lines indicate location of suction slots for 9-slot arrangement. $R = 27.8 \times 10^6$

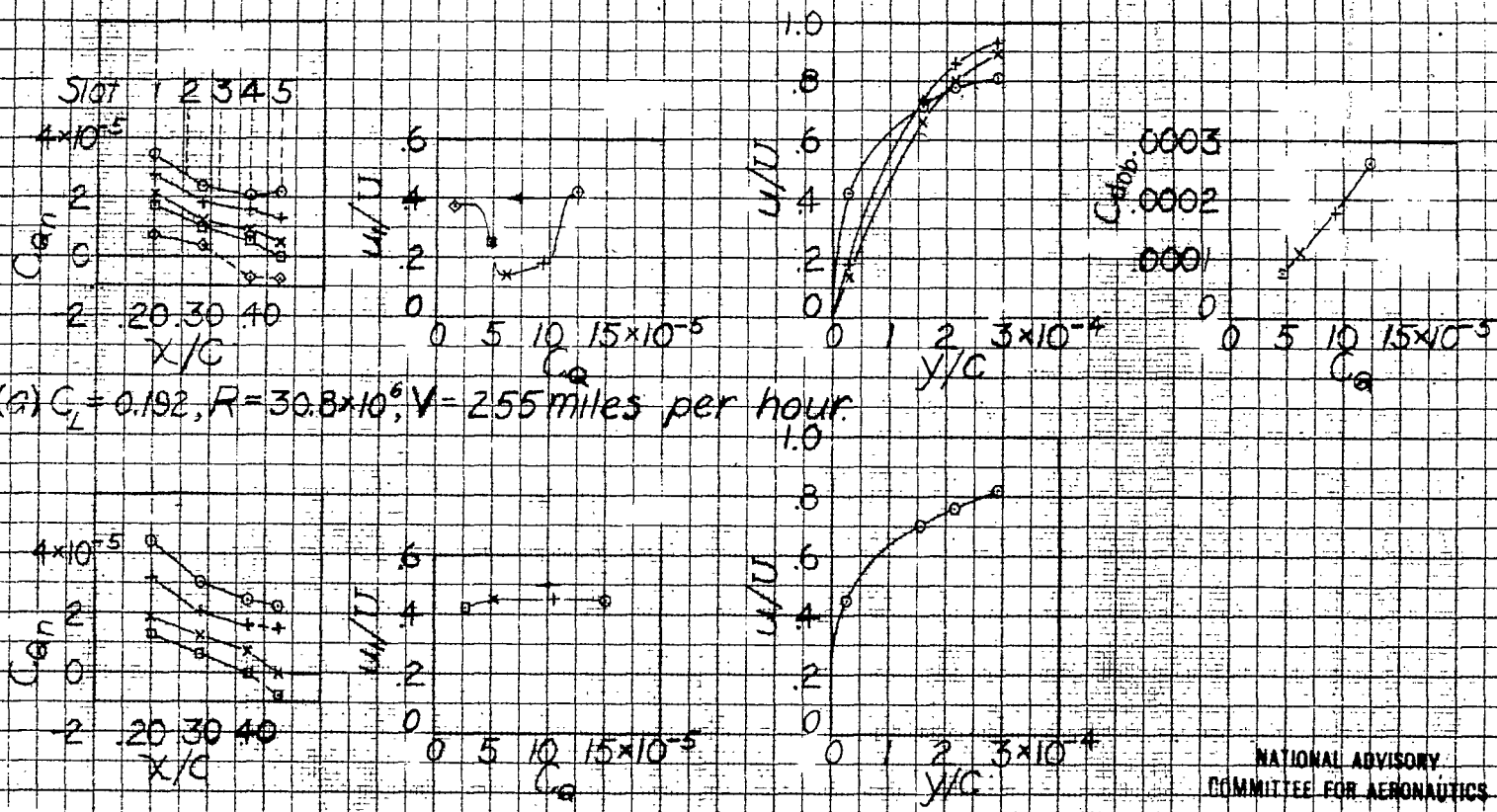

NATIONAL ADVISORY COMMITTEE FOR AERONAUTICS

Figure 9.—Results of boundary-layer-control tests of NACA 35-215 test panel. 9-slot arrangement. Slot-flow conditions for each row of graphs correlated by means of symbols ⊙, +, ×, ⊡, ... Arrows indicate order in which test points obtained.

NACA

Fig. 9a,b

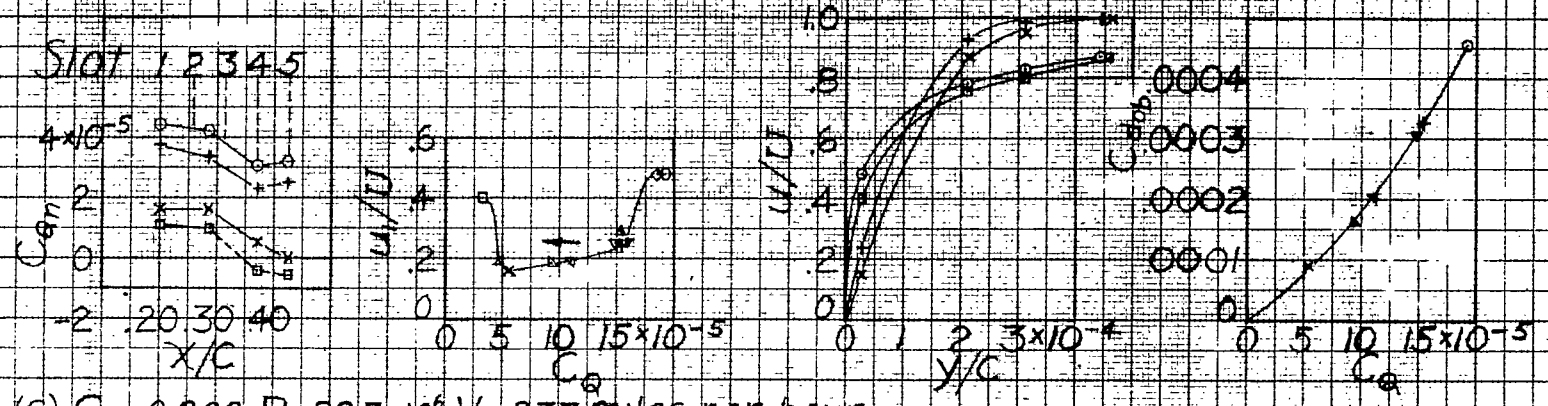

(c) $C_L = 0.222$, $R = 28.7\times10^6$, $V = 237$ miles per hour.

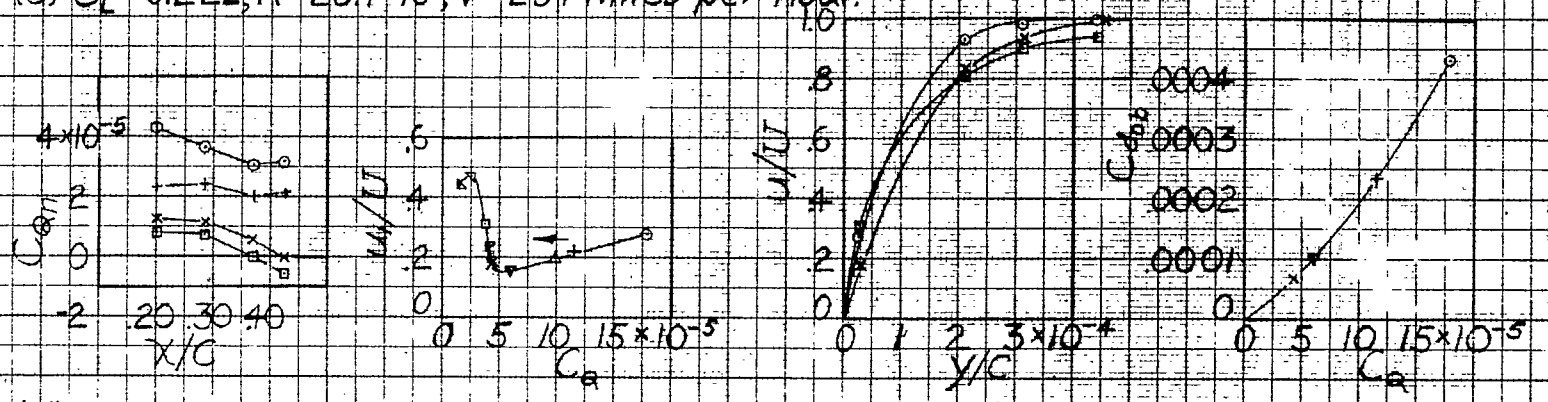

(d) $C_L = 0.226$, $R = 28.2\times10^6$, $V = 234$ miles per hour.

NATIONAL ADVISORY
COMMITTEE FOR AERONAUTICS

Figure 9.—Continued.

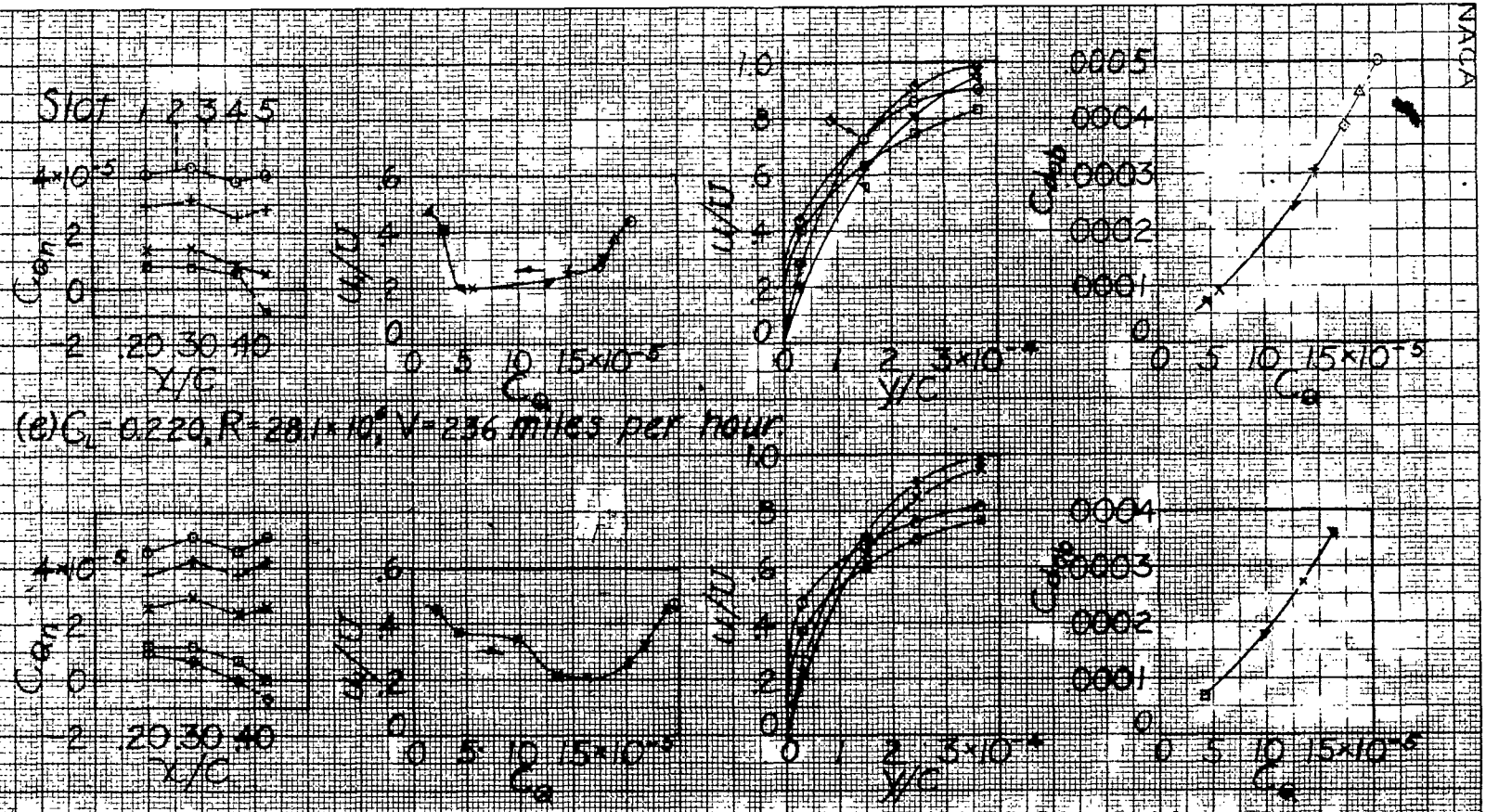

NATIONAL ADVISORY COMMITTEE FOR AERONAUTICS

Figure 9 - Continued

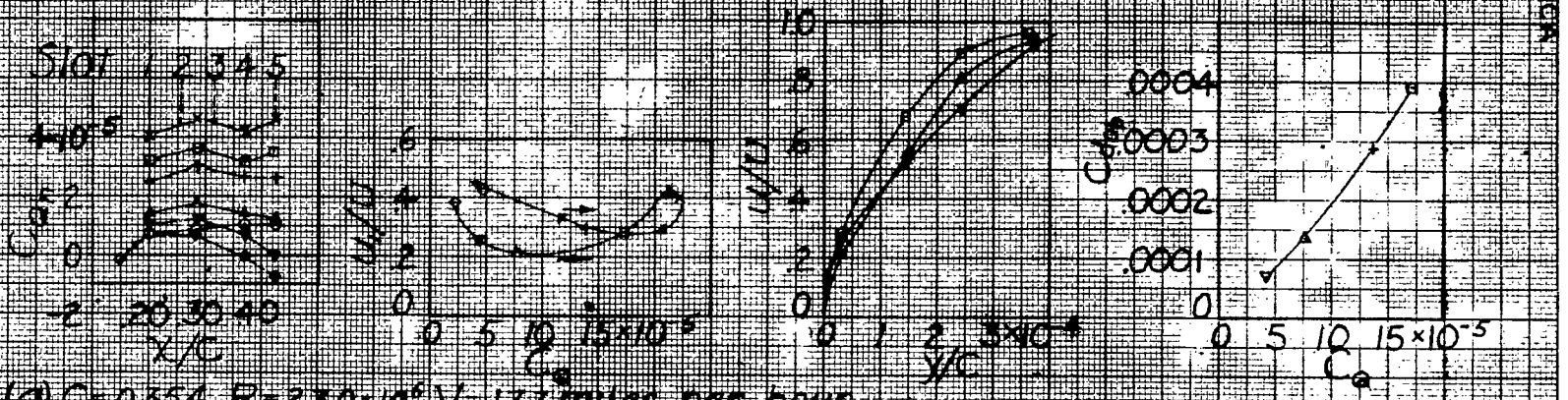

(g) $C_L = 0.354$, $R = 2.30 \times 10^6$, $V = 113$ miles per hour.

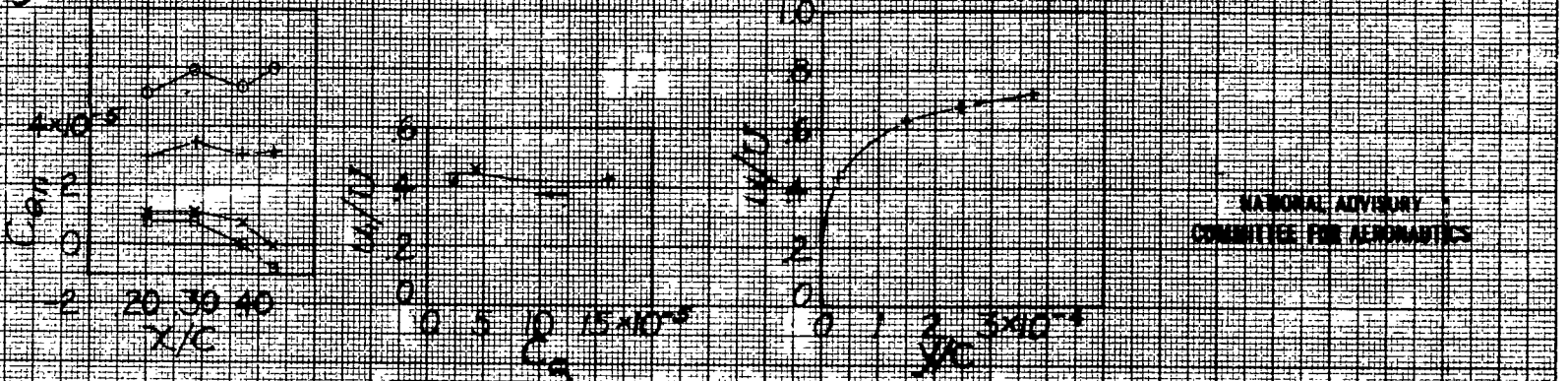

(h) $C_L = 0.414$, $R = 2.17 \times 10^6$, $V = 160$ miles per hour.

Figure 9 - Continued.

NATIONAL ADVISORY COMMITTEE FOR AERONAUTICS

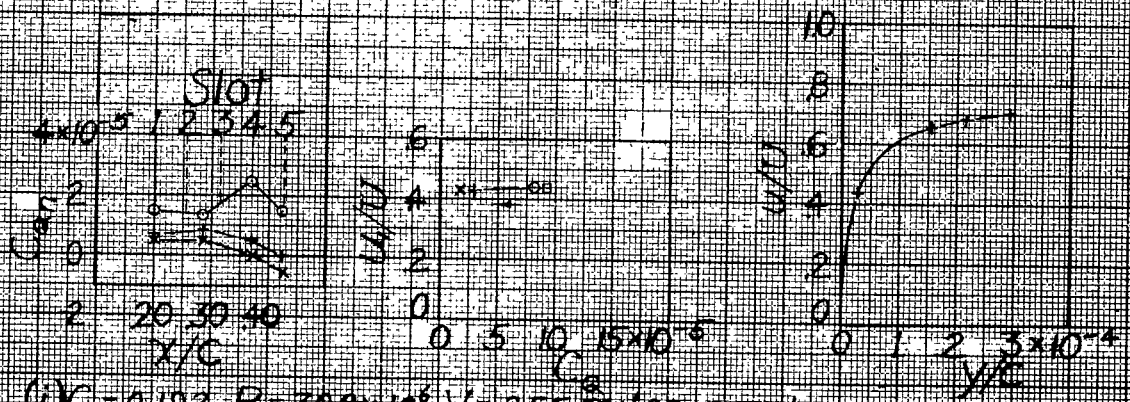

(i) $C_L = 0.192$, $R = 30.8 \times 10^6$, $V = 255$ miles per hour.

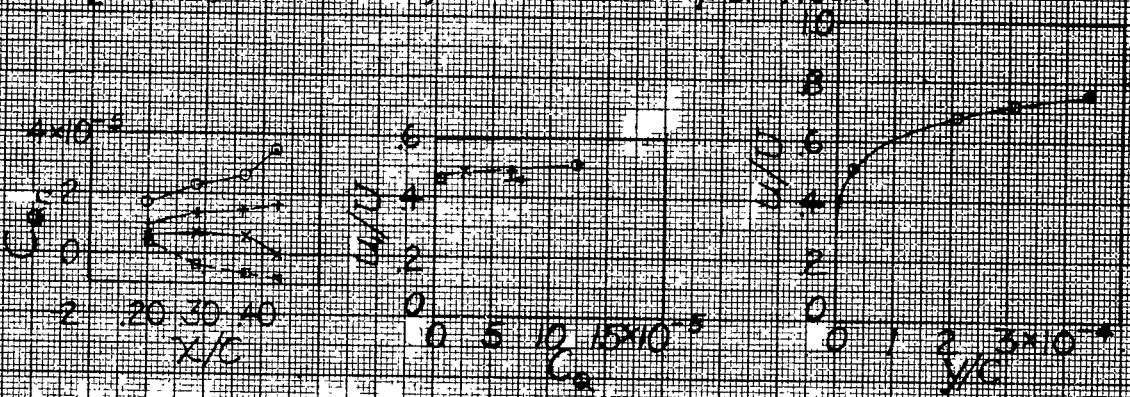

(j) $C_L = 0.274$, $R = 28.0 \times 10^6$, $V = 236$ miles per hour.

Figure 9.—Concluded.

NATIONAL ADVISORY COMMITTEE FOR AERONAUTICS

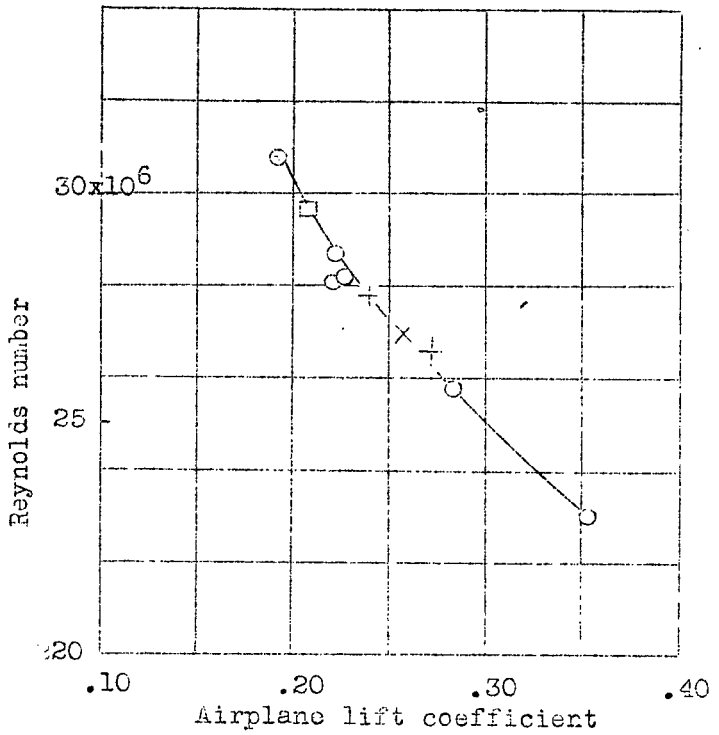

○ x/c = 0.45, slotted panel, upper surface
+ " = 0.325, plain " " "
× " = 0.374, " " " "
□ " = 0.400, " " " "

Figure 10.- Comparison of flight conditions for which transition from laminar to turbulent flow was obtained at several chordwise positions on the NACA 35-215 test panel without slots with those for which laminar flow was obtained at 45 percent chord on the panel with slots.

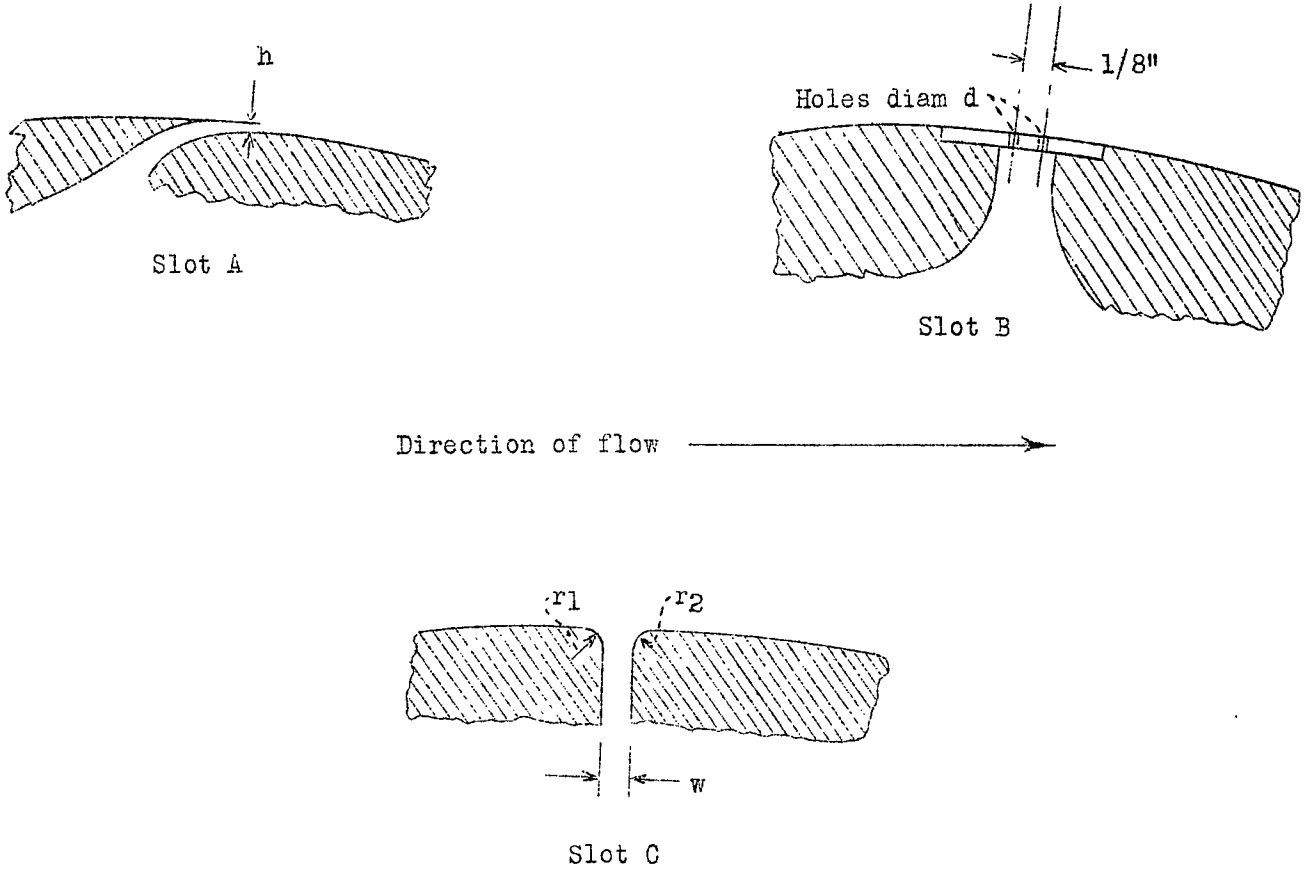

Figure 11.- Types of slot for control of laminar boundary layer, tested in NACA two-dimensional low-turbulence tunnel.

LANGLEY RESEARCH CENTER
3 1176 01363 9795