~~6460~~
~~GE I 16/3~~

NATIONAL ADVISORY COMMITTEE FOR AERONAUTICS ~~C.1~~

WARTIME REPORT

ORIGINALLY ISSUED

August 1945 as
Memorandum Report E5H16

TESTS OF AN ADJUSTABLE-AREA EXHAUST NOZZLE FOR JET-PROPULSION ENGINES

By E. C. Wilcox

Aircraft Engine Research Laboratory
Cleveland, Ohio

NACA

WASHINGTON

NACA WARTIME REPORTS are reprints of papers originally issued to provide rapid distribution of advance research results to an authorized group requiring them for the war effort. They were previously held under a security status but are now unclassified. Some of these reports were not technically edited. All have been reproduced without change in order to expedite general distribution.

3 1176 01363 8474

NACA MR No. E5H16

NATIONAL ADVISORY COMMITTEE FOR AERONAUTICS

MEMORANDUM REPORT

for the

Air Technical Service Command, Army Air Forces

TESTS OF AN ADJUSTABLE-AREA EXHAUST NOZZLE FOR JET-PROPULSION ENGINES

By E. C. Wilcox

SUMMARY

Tests were conducted on a 1600-pound-thrust centrifugal-flow-type turbojet engine equipped with an NACA designed adjustable-area exhaust nozzle and with a series of fixed-area nozzles of various throat diameters. The effective area range obtained on the variable-area nozzle corresponded to the area change accompanying a variation in fixed-area-nozzle throat diameter of from 11.1 to 12.6 inches.

A comparison of the performance data of the engine obtained in the two series of tests indicated that the adjustable-area nozzle was as efficient as the fixed-area nozzles tested.

INTRODUCTION

In their present stage of development, it is advantageous to provide existing jet-propulsion engines with a method of augmenting their power output for take-off, climb, and during combat when sudden bursts of power may be necessary. Investigations of methods of providing this momentary power increase indicated the desirability of a variable-area exhaust nozzle. When used in conjunction with an augmentation scheme, an adjustable-area exhaust nozzle should permit the turbine-discharge temperature, which is a measure of the turbine-bucket temperature, to be maintained at its normal value. An adjustable-area exhaust nozzle is also valuable for normal operation because the engine may be operated at maximum efficiency or maximum power output, over a wide range of engine inlet temperatures and pressures and airplane speeds, by adjusting the discharge nozzle area.

Certain jet engines are equipped with an adjustable-area discharge nozzle of the following type: The inner exhaust cone, behind the turbine, is equipped with a movable conical end section. This end section extends beyond the circular nozzle opening and thus provides an annular discharge area, which may be varied by moving the conical end section along the axis of the engine. The adjustable-area exhaust nozzle described in this paper is intended for use on jet engines not equipped with a means of varying the discharge nozzle area.

This report presents performance data obtained during April 1945 at the NACA Cleveland laboratory on a 1600-pound-thrust centrifugal-flow-type turbojet engine equipped with an NACA designed adjustable-area exhaust nozzle. In order to obtain a basis of comparison, performance data were also obtained on the engine equipped with straight-sided fixed-area nozzles of various throat diameters.

DESCRIPTION OF APPARATUS

The adjustable-area exhaust nozzle used for the test reported herein (see fig. 1) consists of a spherical nozzle with a circular discharge area equipped with two adjustable flaps. Both the nozzle and the flaps are so made that their surfaces lie on concentric spheres, thus allowing relative motion between the flaps and the nozzle without changing the radial clearance between them. Inasmuch as relatively large clearances are used between the flaps and the nozzle to prevent sticking at high operating temperatures, thin metal sealing strips (fig. 1) are provided to prevent leakage. The flaps are adjusted by a screw-operated linkage. The linkage was designed only for test purposes and is not intended for use in flight installations. The nozzles used for comparison (fig. 2) were straight-sided fixed-area nozzles with throat diameters varying from 11.5 to 13.5 inches and with equal angles of taper.

The nozzle tests described in this report were conducted with the nozzle mounted on a 1600-pound-thrust centrifugal-flow-type turbojet engine. The installation of the adjustable-area nozzle on the jet engine is shown in figure 3.

TEST PROCEDURE

In order to adjust the nozzle through its entire range, that is, from the full-closed to the full-open position, 24 turns of the adjusting screw were required. Tests were conducted at 0, 6, 12, 18, and 24 turns open. The throat diameters of the fixed-area nozzles used to obtain a basis for comparison were 11.5, 12,0, 12.5, 13.0, and 13.5 inches.

Tests were conducted in the following manner: For a given position of the adjustable nozzle or for a given fixed-area nozzle size, performance data were obtained at various rotor speeds ranging from 12,000 rpm to either 16,500 rpm or to the speed corresponding to the maximum allowable tail-pipe gas temperature. This procedure was repeated for all fixed-area nozzle sizes and for several positions of the adjustable nozzle. All tests were run on the same day in order to maintain relatively constant inlet conditions.

RESULTS AND DISCUSSION

The performance data obtained as observed and as corrected to standard sea-level conditions at engine inlet (519° R and 14.7 lb/sq in. absolute) are presented in table I.

The corrected static thrust, fuel flow, and tail-pipe gas temperature are shown as functions of corrected rotor speed in figures 4, 5, and 6, respectively. Part (a) of each figure presents data for various positions of the adjustable nozzle and part (b), for various throat diameters of the fixed-area nozzles.

The data presented in figures 4 and 5 are cross-plotted in figure 7 to provide curves of static thrust against fuel flow at several constant rotor speeds for both the adjustable-area nozzle and the fixed-area nozzles. Obviously, the higher the thrust produced at a given fuel flow and rotor speed, the more efficient the nozzle. The discharge area of the adjustable nozzle changes from circular in the full-open position to elliptical in the full-closed position. There was a possibility that this elliptical shape might incur more losses than the circular but figure 7 indicates that the adjustable-area nozzle, in all positions, was as efficient as the fixed-area nozzles tested.

Curves of static thrust against tail-pipe gas temperature at several constant rotor speeds are presented in figure 8 (cross plot from figs. 4 and 6) for both the adjustable-area nozzle and the fixed-area nozzles. Because the measurements of tail-pipe temperature were less accurate than the fuel-flow data, any slight discrepancy between the curves of figures 7 and 8 may be attributed to experimental error; both figures 7 and 8, however, indicate that the adjustable-area nozzle was as efficient as the fixed-area nozzles tested.

Figure 9 presents the equivalent throat diameter of a fixed-area nozzle corresponding to a given position of the adjustable-area exhaust nozzle. This curve was obtained from the data of figure 5. The fuel flow for a given rotor speed and fixed-area-nozzle diameter was found from figure 5(b); with the same rotor speed and fuel flow, the adjustable-nozzle position corresponding to the given nozzle diameter was found from the data of figure 5(a). This procedure was repeated until a complete curve was obtained. Although the curve is drawn for a constant rotor speed of 14,000 rpm, the variation with rotor speed is slight. By means of the adjustable-area nozzle tested, an effective-area range could be obtained corresponding to the area change accompanying a variation in fixed-area-nozzle throat diameter from 11.1 to 12.6 inches. Although the area range possible for a nozzle of this type is relatively fixed for a given tail-pipe diameter, the upper and lower area limits may be readily varied by altering the design of the nozzle and flaps. (See fig. 1.)

SUMMARY OF RESULTS

A comparison of the performance of a 1600-pound-thrust centrifugal-flow-type turbojet engine when equipped with an NACA designed adjustable-area exhaust nozzle and when equipped with a series of fixed-area nozzles of various throat diameters indicates that the adjustable-area nozzle is as efficient as the fixed-area nozzles tested.

Aircraft Engine Research Laboratory,
National Advisory Committee for Aeronautics,
Cleveland, Ohio, August 16, 1945.

NATIONAL ADVISORY
COMMITTEE FOR AERONAUTICS

I - PERFORMANCE OF 1600-POUND-THRUST CENTRIFUGAL-FLOW-TYPE TURBOJET ENGINE EQUIPPED WITH AN ADJUSTABLE-AREA EXHAUST NOZZ AND PERFORMANCE WITH FIXED-AREA NOZZLES OF VARIOUS THROAT DIAMETERS

[As observed and as corrected to standard sea-level conditions (14.70 lb/sq in. abs. and 519° R) at engine inlet]

Reading	Barometric pressure (lb/sq in. abs.)	Exhaust nozzle: Fixed-area nozzle-throat diameter (in.)	Exhaust nozzle: Adjustable-nozzle position (turns open)	Engine-inlet total temperature (°R)		Engine-inlet total pressure (lb/sq in. abs.)		Rotor speed (rpm)		Static thrust (lb)		Fuel flow (lb/hr)		Indicated tail-pipe gas temperature (°R)		Air flow (lb/sec)		Specific fuel consumption (lb)/(hr)(lb-thrust)	
				Read	Corr.	Read	Corr.	Read	Corr.	Read	Corr.	Read	Corr.	Read	Corr.	Read	Corr.	Read	Corr.
A1	14.45	— — —	0	524	519	14.43	14.70	12,006	11,948	725	739	1105	1120	1572	1557	19.3	19.8	1.524	1.516
A2				527		14.42		13,037	12,938	896	913	1292	1307	1628	1603	21.5	22.1	1.442	1.432
A3				531		14.43		14,000	13,840	1082	1103	1516	1528	1705	1666	23.4	24.1	1.401	1.385
A4	14.45	— — —	6	523	519	14.43	14.70	11,950	11,905	670	683	1002	1017	1470	1459	19.9	20.4	1.496	1.489
A5				523		14.43		12,997	12,948	826	841	1167	1184	1510	1499	22.1	22.6	1.413	1.408
A6				527		14.42		13,980	13,874	1001	1020	1363	1379	1562	1538	24.2	24.8	1.362	1.352
A7				526		14.41		15,006	14,905	1221	1246	1625	1647	1646	1624	26.5	27.2	1.331	1.322
A8	14.45	— — —	12	522	519	14.43	14.70	11,904	11,869	618	630	943	958	1403	1395	20.1	20.6	1.526	1.521
A9				522		14.42		13,003	12,965	762	777	1100	1118	1430	1422	23.5	24.0	1.444	1.439
A10				523		14.42		14,000	13,947	922	940	1270	1290	1472	1461	24.8	25.3	1.377	1.372
A11				526		14.41		15,016	14,915	1135	1158	1500	1520	1542	1521	27.2	27.9	1.322	1.313
A12				530		14.40		16,009	15,843	1364	1392	1788	1806	1648	1614	29.3	30.2	1.311	1.297
A13	14.45	— — —	18	523	519	14.43	14.70	11,970	11,925	574	585	909	922	1358	1348	20.5	20.9	1.584	1.576
A14				525		14.42		13,007	12,932	707	721	1047	1061	1380	1364	22.8	23.3	1.481	1.472
A15				523		14.42		13,968	13,915	855	872	1195	1214	1412	1401	24.8	25.5	1.398	1.392
A16				526		14.41		15,026	14,925	1057	1078	1414	1433	1480	1460	27.3	28.1	1.338	1.325
A17				528		14.40		15,989	15,853	1283	1310	1695	1716	1578	1551	29.5	30.4	1.321	1.310
A18				529		14.40		16,445	16,289	1404	1433	1854	1875	1637	1606	30.5	31.5	1.321	1.308
A19	14.45	— — —	24	523	519	14.43	14.70	11,966	11,921	540	550	893	906	1342	1332	20.5	21.0	1.654	1.647
A20				523		14.42		13,219	12,970	675	688	1022	1038	1360	1350	22.8	23.4	1.514	1.509
A21				525		14.42		13,990	13,909	819	835	1165	1181	1392	1376	25.0	25.6	1.422	1.414
A22				524		14.41		15,070	14,938	1014	1034	1371	1392	1453	1439	27.3	27.9	1.352	1.346
A23				529		14.40		15,991	15,839	1243	1269	1652	1670	1553	1524	29.5	30.4	1.329	1.316
A24				531		14.40		16,469	16,281	1366	1394	1821	1838	1615	1579	30.5	31.5	1.333	1.319
B1	14.43	11.5	— — —	528	519	14.40	14.70	11,978	11,876	657	671	1011	1023	1490	1465	19.5	20.1	1.539	1.525
B2				528		14.40		12,983	12,873	810	827	1172	1186	1535	1509	21.5	22.2	1.447	1.434
B3				530		14.39		13,976	13,831	1003	1025	1379	1395	1600	1567	23.6	24.4	1.375	1.361
B4				532		14.39		14,974	14,791	1230	1257	1662	1678	1705	1663	25.6	26.5	1.351	1.335
B5	14.43	12.0	— — —	527	519	14.40	14.70	11,972	11,881	607	620	958	971	1425	1403	19.9	20.4	1.578	1.566
B6				526		14.40		12,961	12,874	742	758	1098	1114	1455	1436	22.0	22.7	1.480	1.470
B7				527		14.39		13,986	13,880	920	940	1275	1293	1500	1477	24.2	24.9	1.386	1.376
B8				531		14.38		15,006	14,835	1137	1162	1513	1529	1575	1539	26.5	27.4	1.331	1.316
B9				532		14.38		15,985	15,790	1386	1416	1818	1835	1685	1644	28.5	29.5	1.312	1.296
B10	14.43	12.5	— — —	525	519	14.40	14.70	11,972	11,904	562	574	906	920	1360	1344	20.3	20.9	1.612	1.603
B11				524		14.40		13,005	12,943	681	695	1034	1051	1380	1367	22.5	23.1	1.518	1.512
B12				526		14.39		14,008	13,914	836	854	1184	1202	1415	1396	24.8	25.5	1.416	1.407
B13				527		14.38		15,018	14,904	1025	1048	1396	1411	1480	1458	27.0	27.8	1.357	1.346
B14				530		14.38		15,989	15,823	1254	1282	1668	1687	1575	1542	29.1	30.1	1.330	1.316
B15				532		14.37		16,483	16,282	1384	1416	1835	1854	1645	1605	30.2	31.3	1.326	1.309
B16	14.43	13.0	— — —	525	519	14.40	14.70	11,944	11,876	504	515	866	879	1325	1310	20.4	20.9	1.718	1.707
B17				524		14.40		12,971	12,909	621	634	980	996	1340	1327	22.6	23.2	1.578	1.571
B18				524		14.39		13,976	13,909	760	777	1119	1138	1365	1352	24.8	25.5	1.472	1.465
B19				526		14.38		15,020	14,919	939	960	1313	1333	1425	1406	27.2	28.0	1.398	1.389
B20				528		14.37		15,995	15,859	1157	1184	1583	1606	1520	1494	29.2	30.2	1.368	1.356
B21				531		14.37		16,475	16,287	1282	1311	1752	1772	1585	1549	30.4	31.4	1.367	1.352
B22	14.43	13.5	— — —	525	519	14.40	14.70	11,938	11,870	465	475	839	852	1300	1285	20.5	21.1	1.804	1.794
B23				524		14.40		12,977	12,915	576	588	950	965	1310	1298	22.7	23.3	1.649	1.641
B24				525		14.39		13,980	13,900	703	718	1080	1097	1335	1320	25.0	25.7	1.536	1.528
B25				526		14.38		15,033	14,932	869	888	1267	1286	1390	1372	27.3	28.1	1.458	1.448
B26				529		14.37		15,999	15,847	1072	1097	1532	1552	1490	1462	29.5	30.4	1.429	1.415
B27				530		14.37		16,493	16,321	1192	1219	1710	1731	1560	1528	30.5	31.5	1.435	1.420

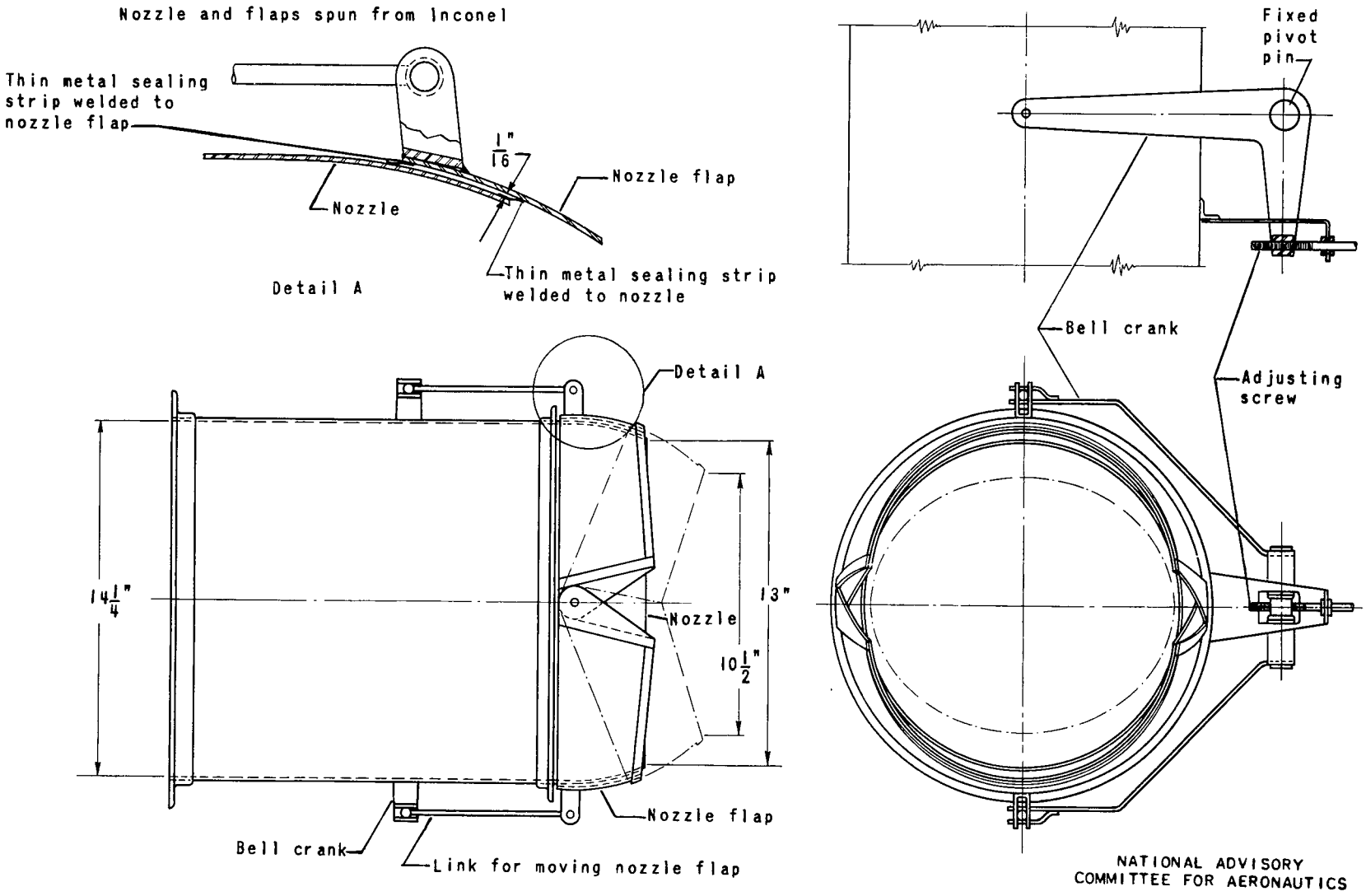

Figure 1. - Details of NACA designed adjustable-area nozzle and operating linkage.

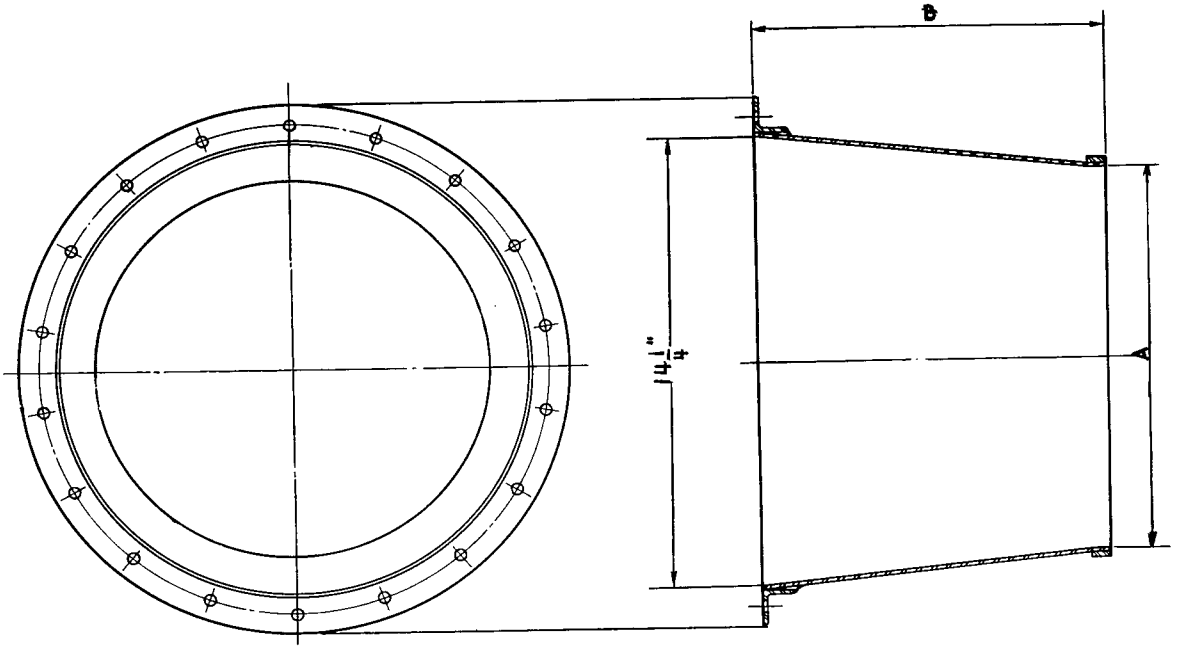

Reading	A(in.)	B(in.)
B1-B4	11.5	12.5
B5-B9	12.0	10.3
B10-B15	12.5	8.0
B16-B21	13.0	5.7
B22-B27	13.5	3.4

NATIONAL ADVISORY
COMMITTEE FOR AERONAUTICS

Figure 2. - Details of fixed-area nozzles.

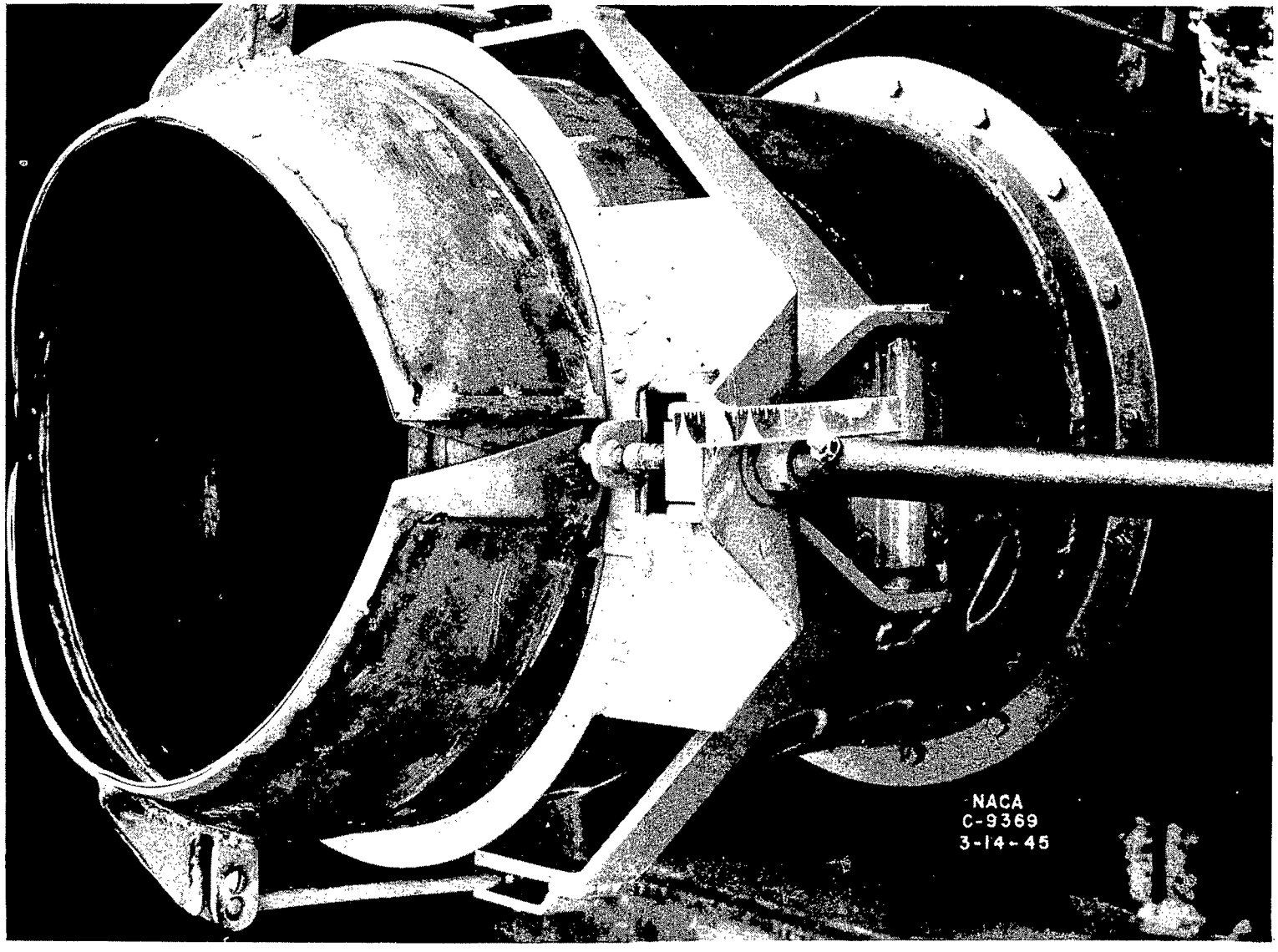

Figure 3. - Installation of adjustable-area nozzle on jet-engine tail pipe.

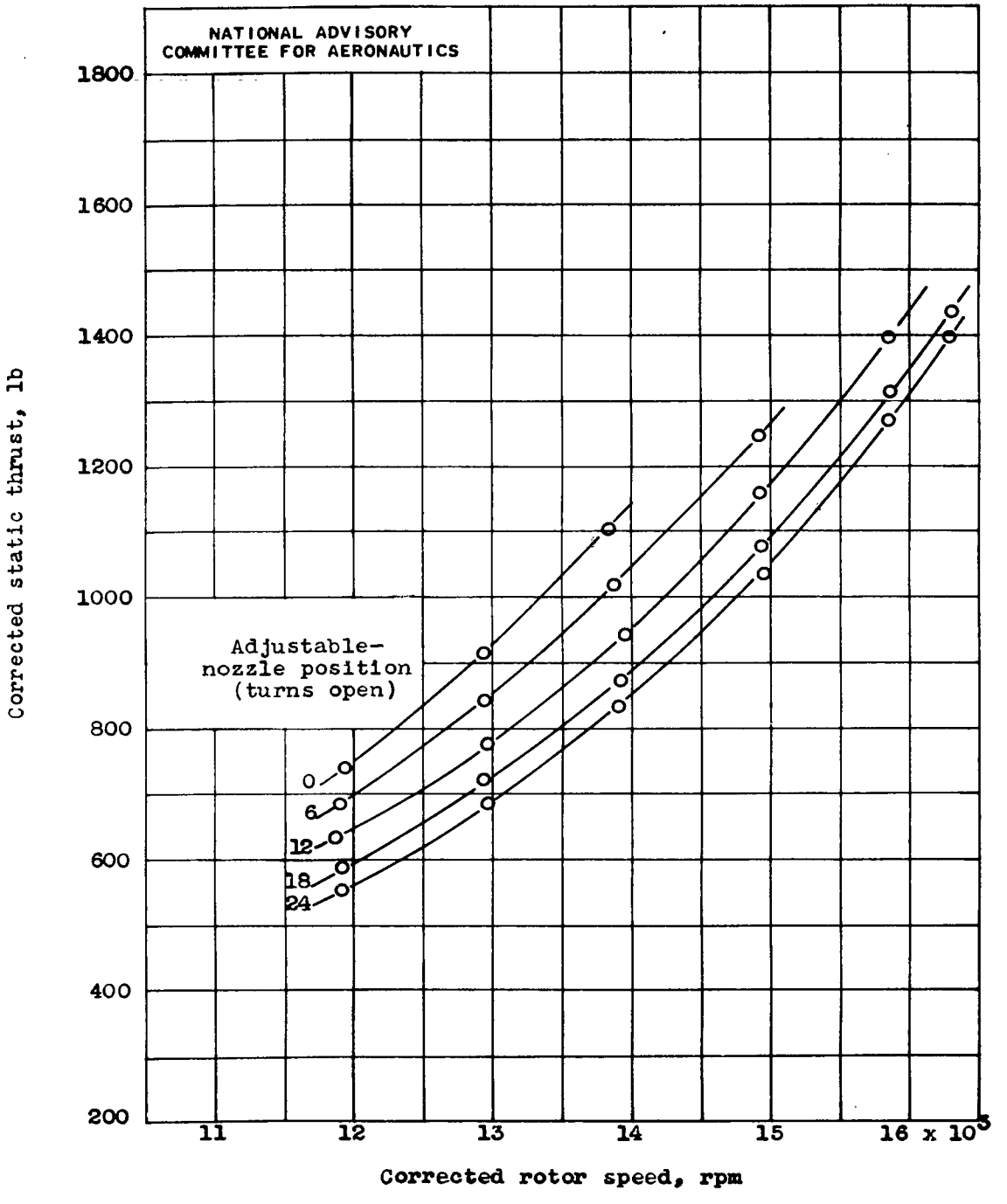

(a) Adjustable-area exhaust nozzle.

Figure 4. - Variation of thrust with exhaust-nozzle area and rotor speed.

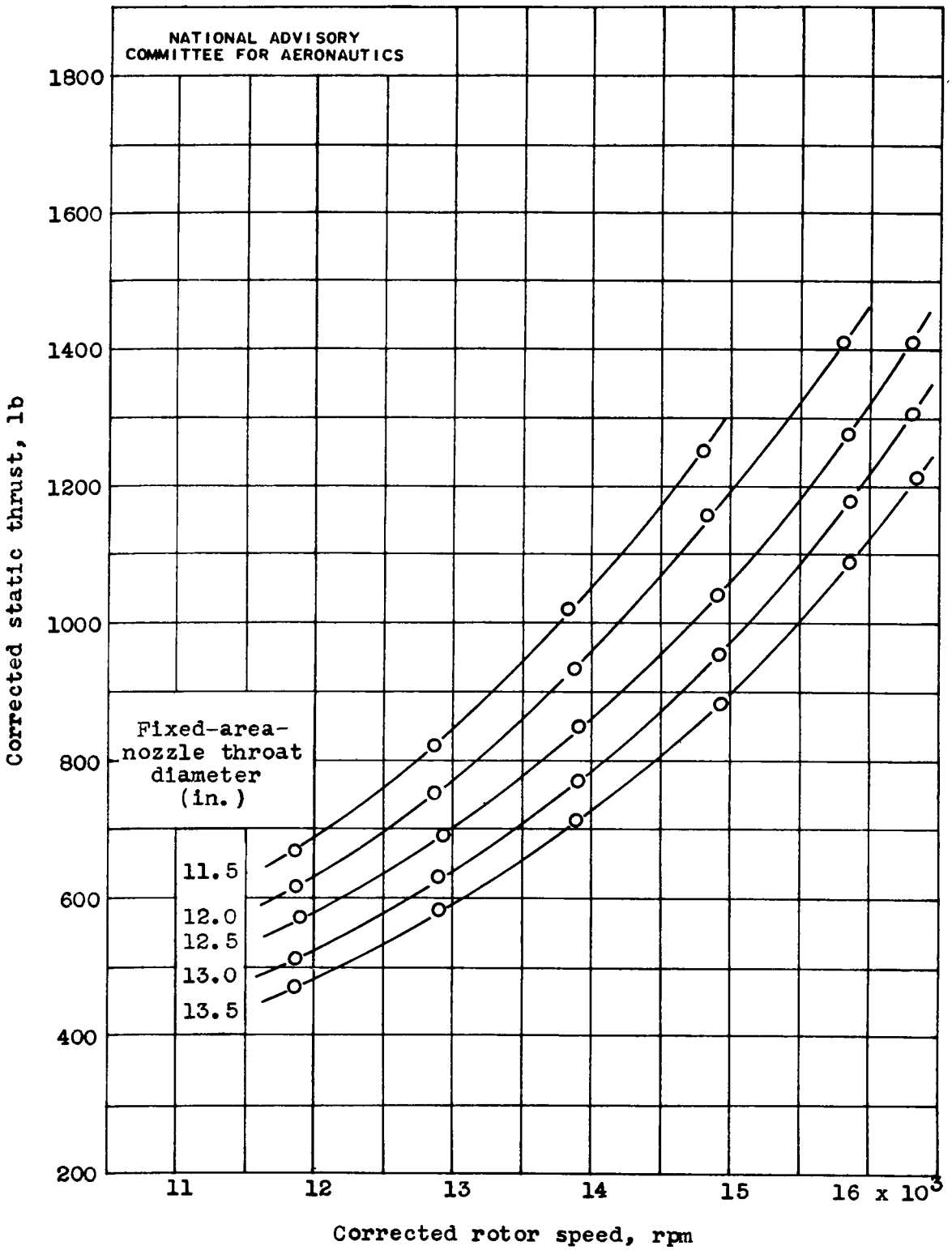

(b) Fixed-area nozzles.

Figure 4. - Concluded.

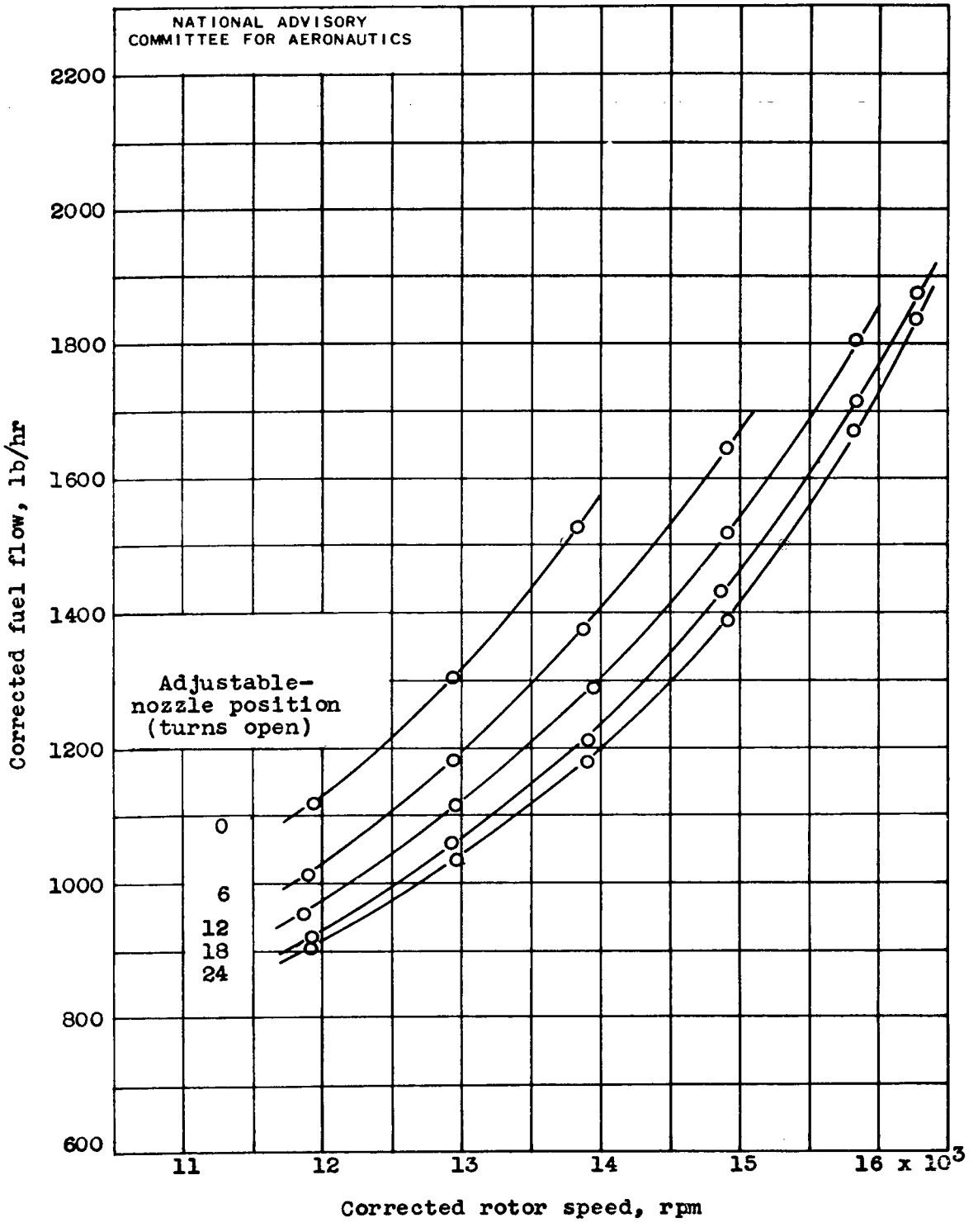

(a) Adjustable-area exhaust nozzle.

Figure 5. - Variation of fuel flow with exhaust-nozzle area and rotor speed.

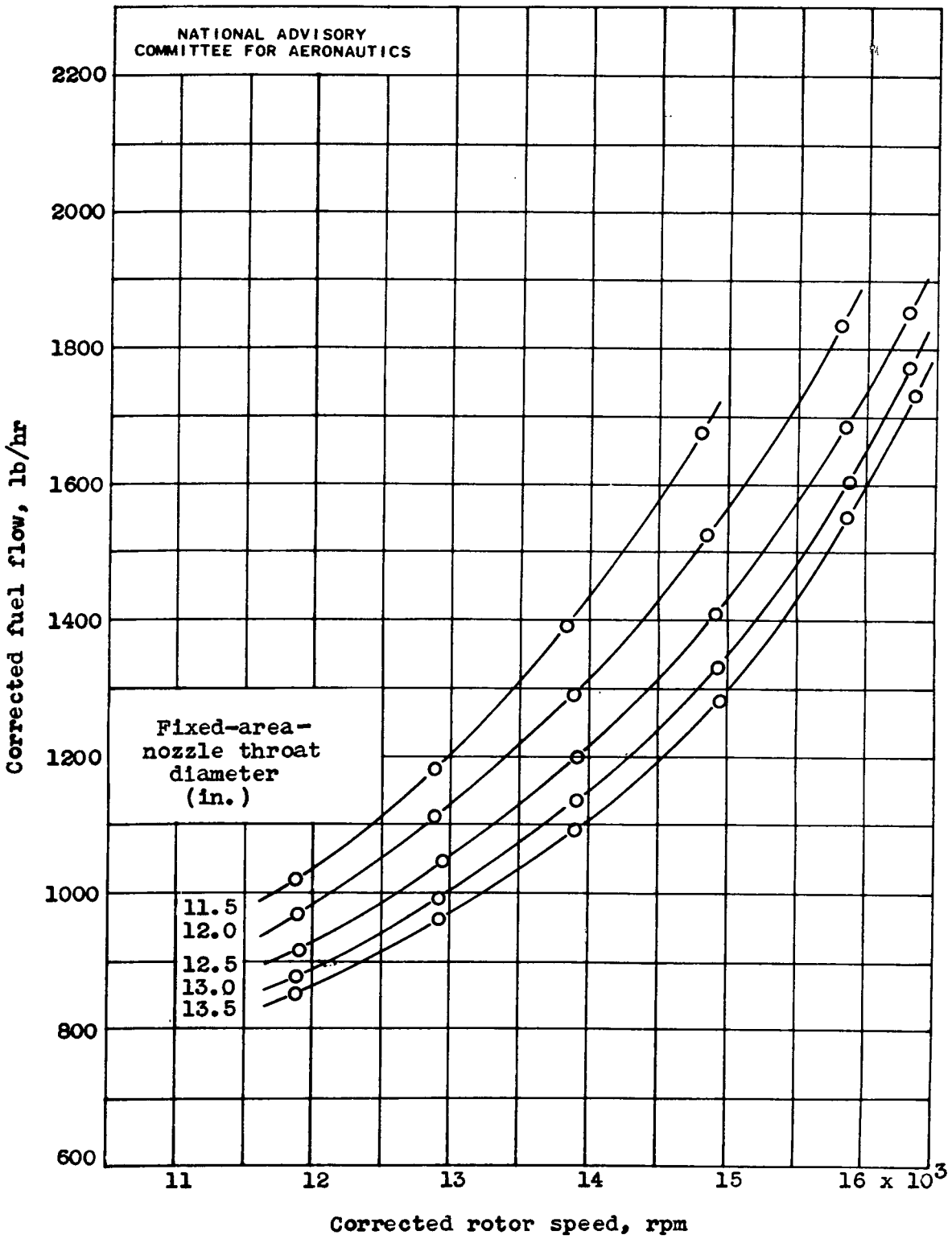

(b) Fixed-area nozzles.

Figure 5. - Concluded.

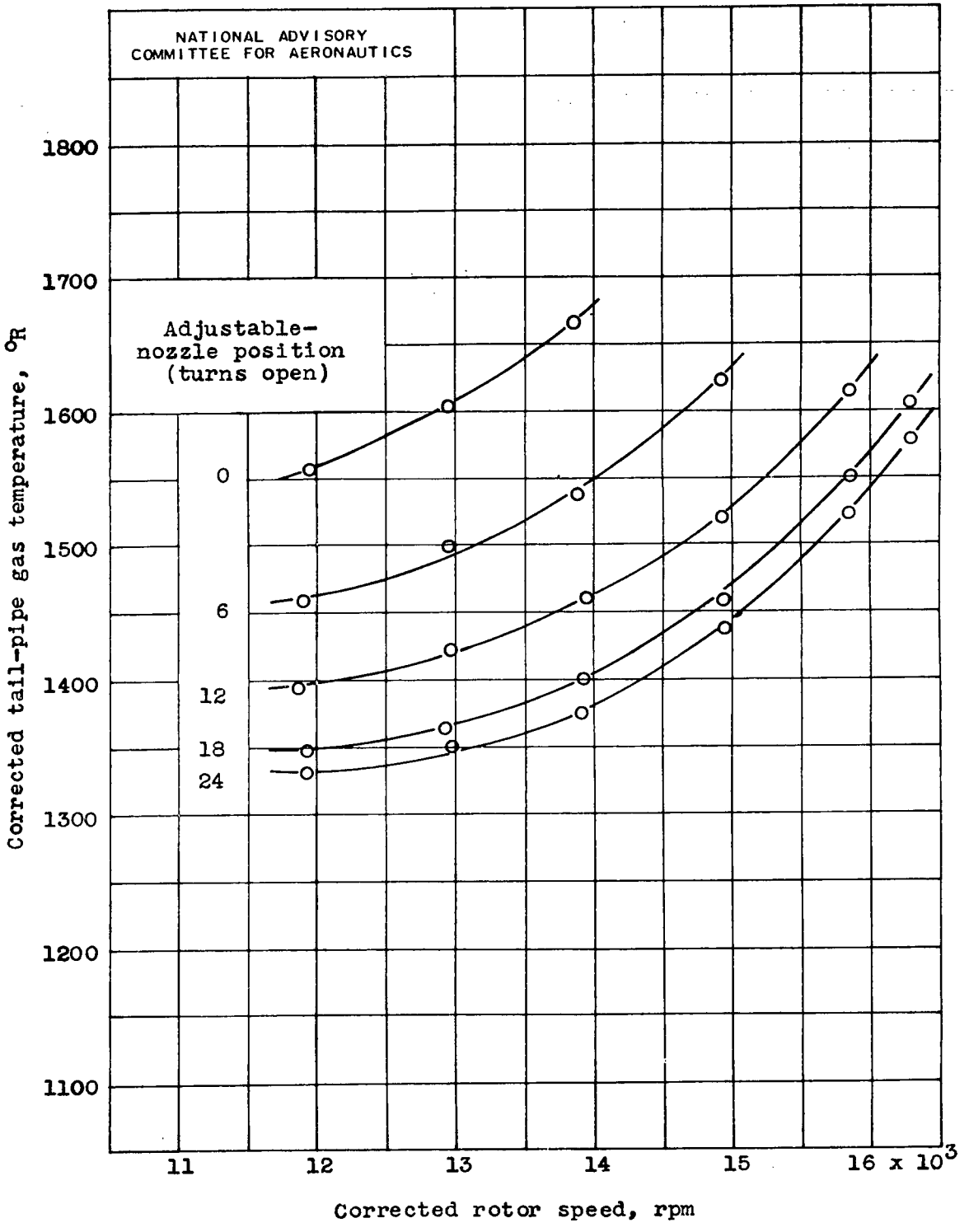

(a) Adjustable-area exhaust nozzle.

Figure 6. - Variation of tail-pipe gas temperature with exhaust-nozzle area and rotor speed.

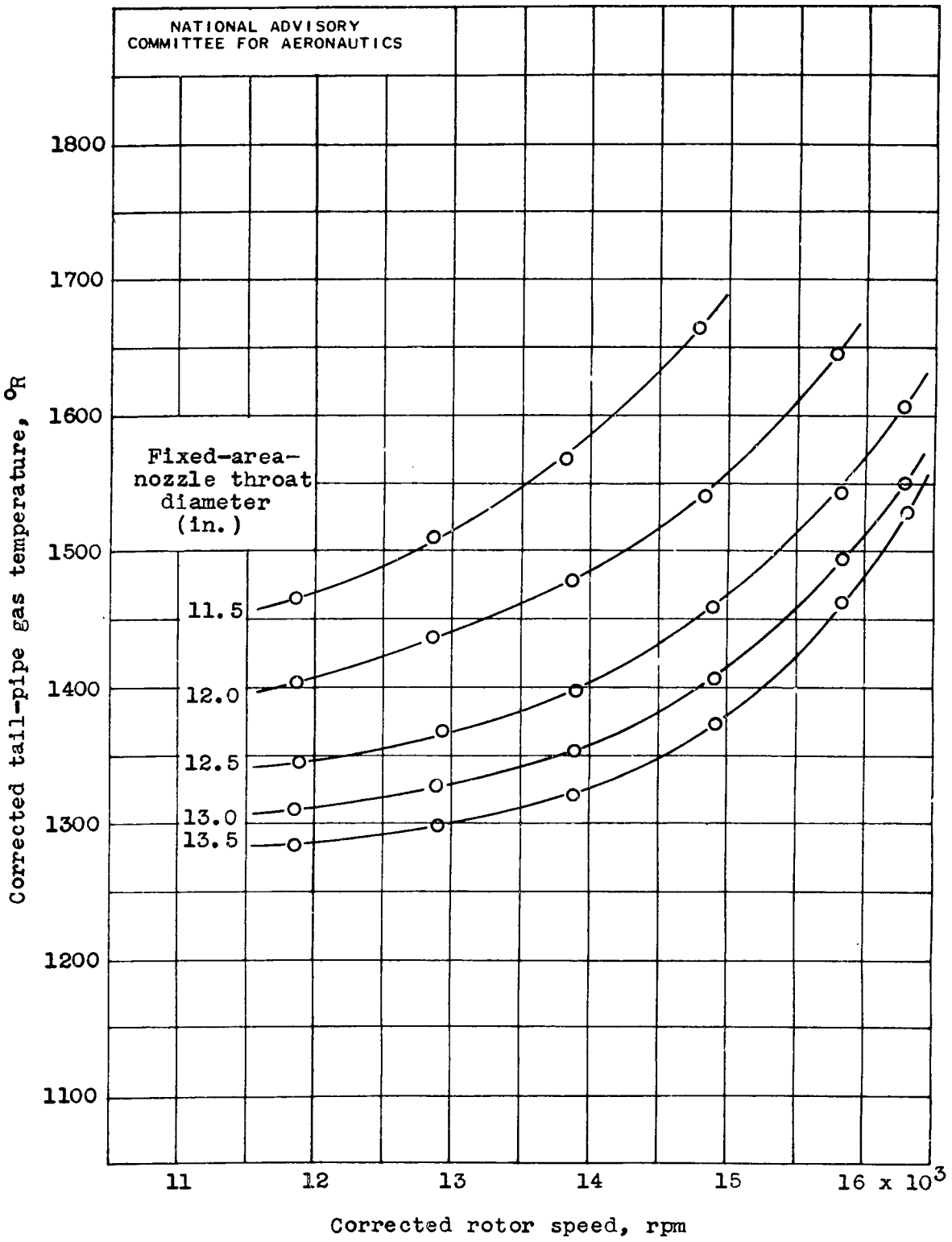

(b) Fixed-area nozzles.

Figure 6. - Concluded.

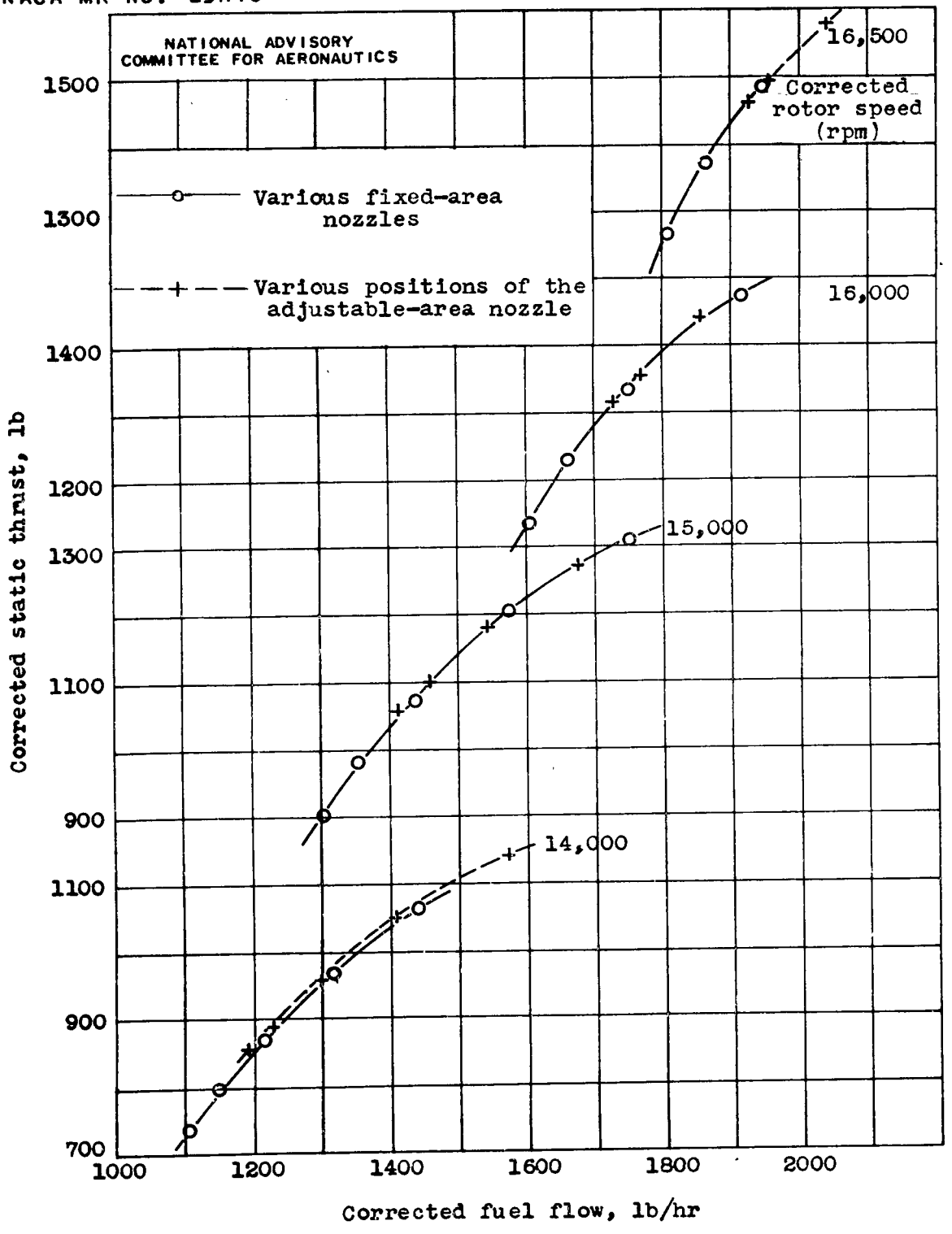

Figure 7. - Variation of thrust with fuel flow for constant rotor speeds. (Cross plot from figs. 4 and 5.)

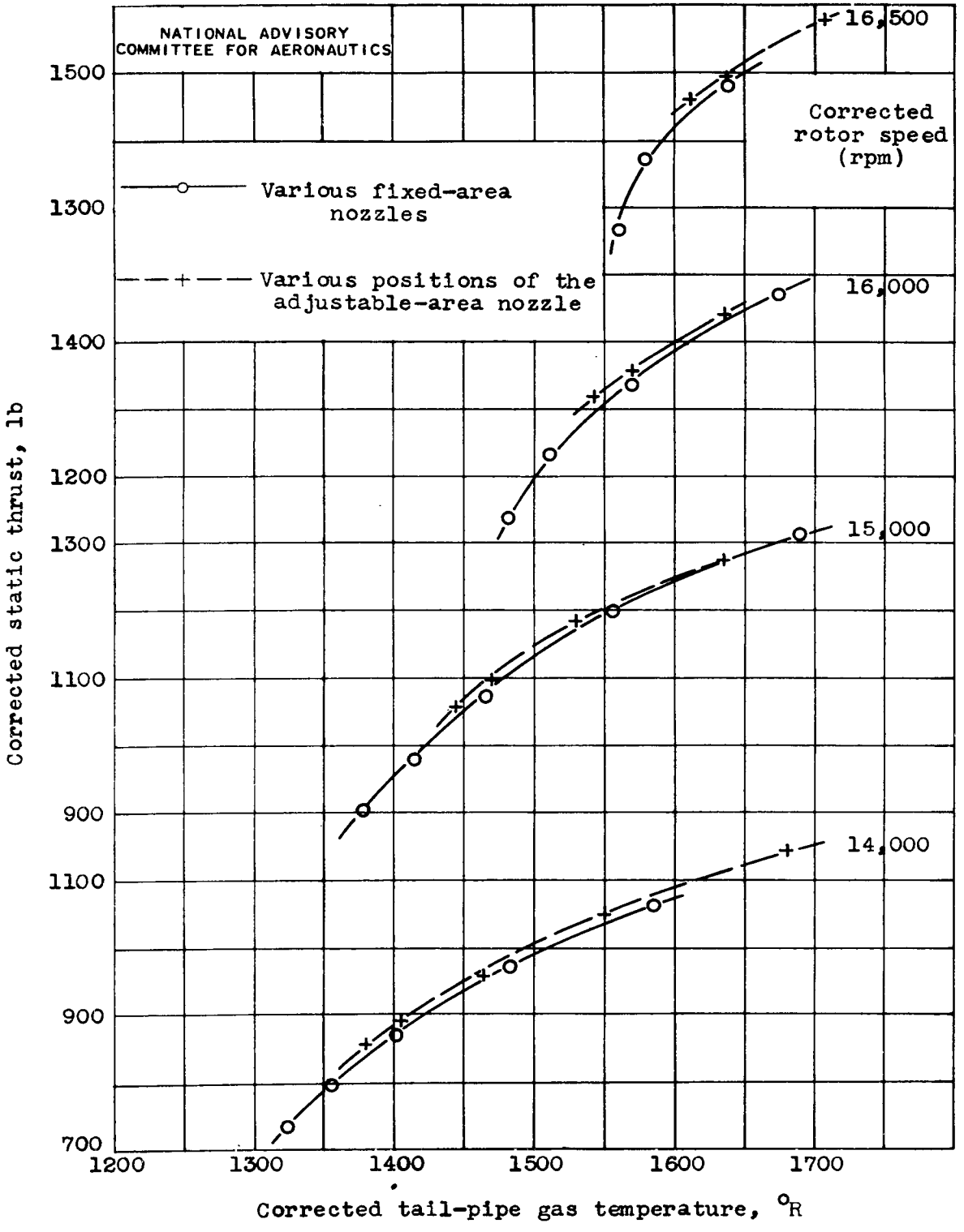

Figure 8. - Variation of thrust with tail-pipe gas temperature for constant rotor speeds. (Cross plot from figs. 4 and 6.)

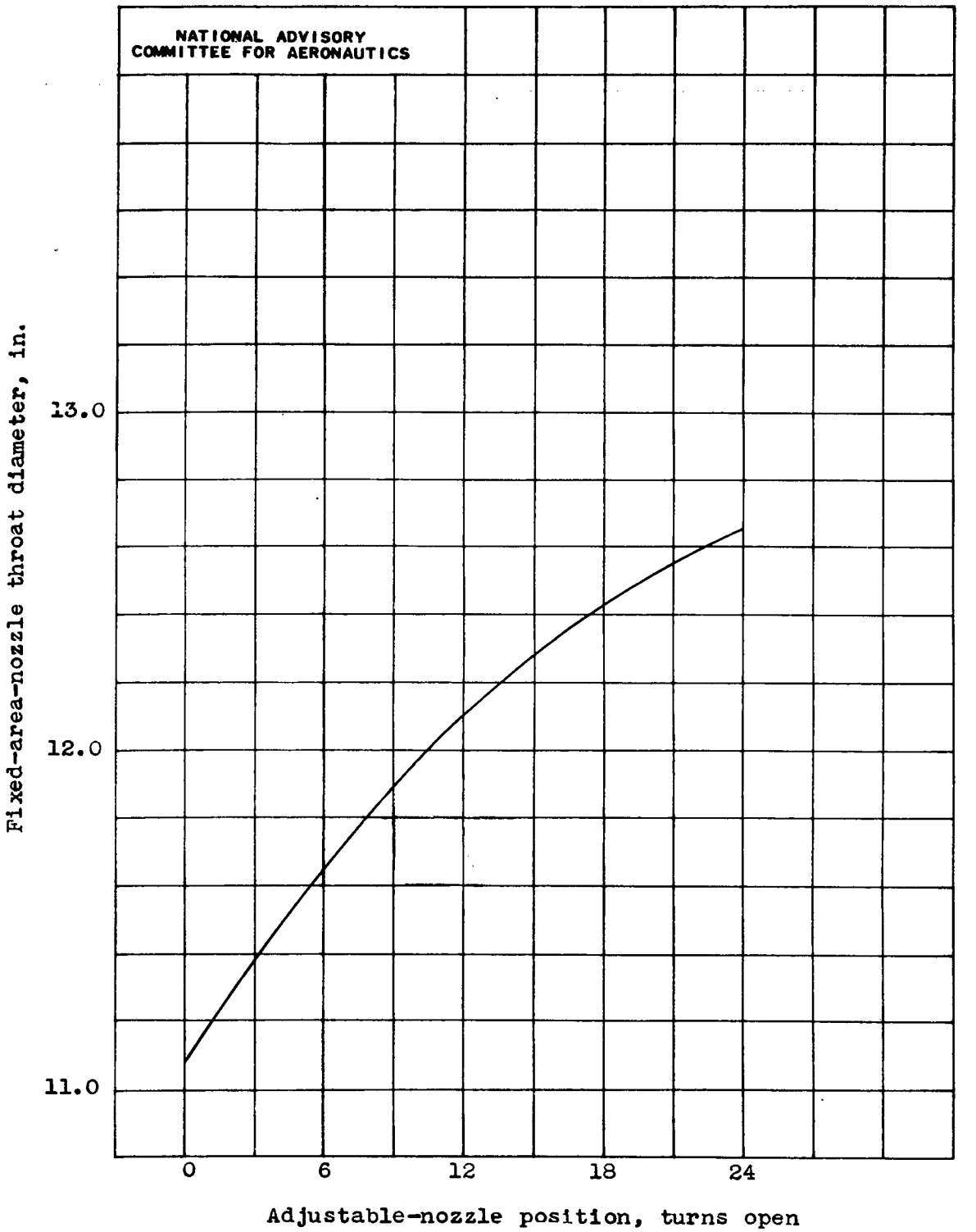

Figure 9. - Variation of equivalent fixed-area-nozzle throat diameter with adjustable-nozzle position. Rotor speed, 14,000 rpm.

LANGLEY RESEARCH
3 1176 0136