DEC 23 1946

CB No. L5E22

3 1176 00160 7424

NATIONAL ADVISORY COMMITTEE FOR AERONAUTICS

WARTIME REPORT

ORIGINALLY ISSUED
June 1945 as
Confidential Bulletin L5E22

FLIGHT INVESTIGATION AT HIGH SPEEDS OF FLOW CONDITIONS OVER AN AIRPLANE WING AS INDICATED BY SURFACE TUFTS

By Clotaire Wood and John A. Zalovcik

Langley Memorial Aeronautical Laboratory
Langley Field, Va.

NACA

WASHINGTON

NACA LIBRARY
LANGLEY MEMORIAL AERONAUTICAL
LABORATORY
Langley Field, Va.

NACA WARTIME REPORTS are reprints of papers originally issued to provide rapid distribution of advance research results to an authorized group requiring them for the war effort. They were previously held under a security status but are now unclassified. Some of these reports were not technically edited. All have been reproduced without change in order to expedite general distribution.

NATIONAL ADVISORY COMMITTEE FOR AERONAUTICS

CONFIDENTIAL BULLETIN

FLIGHT INVESTIGATION AT HIGH SPEEDS OF FLOW CONDITIONS OVER AN AIRPLANE WING AS INDICATED BY SURFACE TUFTS

By Clotaire Wood and John A. Zalovcik

SUMMARY

Flight tests were made at high speeds with a P-47D airplane to determine the flow characteristics, as indicated by wool tufts, on a section of the upper surface of the wing. The behavior of the tufts, which were distributed over a section of the wing from 39.5 to 52.5 percent semispan, was determined from motion pictures. The tests were made in straight flight and in turns under conditions in which airplane lift coefficients from 0.10 to 0.54 and airplane Mach numbers from 0.58 to 0.78 were obtained.

The results of the tests indicated that the flow remained smooth over the test panel until the critical Mach number of the panel was exceeded by 0.08 at a lift coefficient of 0.10 and by 0.05 at a lift coefficient of 0.50. Beyond these Mach numbers, the tufts indicated unsteadiness of flow and, finally, local separation when the Mach number exceeded the critical value by 0.13 at a lift coefficient of 0.10 and by 0.10 at a lift coefficient of 0.50. The region of separated flow originated in the neighborhood of 30 percent chord at high lift coefficients and 45 percent chord at low lift coefficients. Separation appeared to extend over not more than 15 percent chord.

INTRODUCTION

In the course of flight tests made to determine the profile-drag characteristics of the wing of a P-47D airplane, a few wool tufts were fastened to the wing surface to permit visual observation of the direction of flow in the boundary layer. The behavior of the tufts at high

speeds indicated disturbances in the flow over the wing, apparently associated with compressibility effects, and suggested that tuft observations might provide interesting information on flow phenomena at high speeds. A more complete tuft installation was therefore made over a section of the wing surface between 39.5 and 52.5 percent semispan from the plane of symmetry. The tufts were photographed during flight at high speeds. The tests were made in straight flight and in turns under conditions in which airplane lift coefficients from 0.10 to 0.54 and airplane Mach numbers from 0.58 to 0.78 were obtained. The flow conditions indicated by the behavior of the tufts are presented graphically herein for a few typical flight conditions and are correlated with the flight conditions.

APPARATUS AND TESTS

Tufts were located on the upper surface of the right wing of a P-47D airplane (fig. 1) at four spanwise stations: 39.5, 43.5, 48, and 52.5 percent semispan from the plane of symmetry (fig. 2). The tufts consisted of strands of white wool yarn arranged in chordwise rows with each row attached to the surface by a continuous strip of black "Scotch" cellulose tape. Spanwise chalk lines were drawn on the surface of the wing at intervals of 10 percent chord, and each line was identified by a number beginning with 1 at the 10-percent-chord station and continuing through 7 at the 70-percent-chord station (fig. 3).

The wing of the P-47D airplane incorporates Republic S-3 airfoil sections, which have pressure distributions similar to those of the NACA 230-series sections. The average chord of the test panel was about 96 inches and the average thickness was about 12.6 percent chord.

The behavior of the tufts during the tests was photographed with a 16-millimeter motion-picture camera operating at a speed of approximately 32 frames per second. Measurements of normal acceleration and free-stream impact pressure were recorded by means of NACA recording instruments. The altitude of the tests, indicated by an altimeter in the cockpit, was noted by the pilot.

The tests were made in straight flight and in turns $\left(1\frac{1}{2}g \text{ to } 4\frac{1}{2}g\right)$ at an altitude of 20,000 feet and at indicated airspeeds from 315 to 408 miles per hour. The airplane Mach numbers ranged from 0.58 to 0.78, and the airplane lift coefficients ranged from 0.10 to 0.54.

PRESENTATION OF RESULTS

An enlargement of one frame of the motion-picture film taken during flight is shown as figure 4. The quality of the photographs was, in general, too poor to permit satisfactory reproduction in this form; in figures 5 to 8, therefore, sketches based on the original photographs are used to illustrate, for a few typical flight conditions, the flow conditions indicated by the tufts. The flow conditions for various airplane lift coefficients at constant airplane Mach numbers of 0.69 and 0.71 are shown in figures 5 and 6, respectively; the flow conditions for various airplane Mach numbers at constant airplane lift coefficients of 0.13 and 0.43 are shown in figures 7 and 8, respectively. Inasmuch as the field of the camera covered only the forward 70 to 80 percent chord, the flow conditions downstream of this region are not known.

The flow conditions indicated by the tufts at various lift coefficients and Mach numbers are summarized in figure 9. The interpretation of the behavior of the tufts is as follows: Tufts lying straight back and motionless indicate smooth flow, tufts oscillating laterally indicate unsteady flow, and tufts "flopping" around leisurely or lying curved on the surface indicate flow separation. (Compare figs. 4 and 6(d).)

The critical Mach number M_{cr} of wing sections at 25 and 63 percent semispan and the Mach number at which shock was first evident in the wake at 63 percent semispan were determined from the results (unpublished) of other tests of the P-47D airplane and are compared in figure 10 with the Mach numbers at which flow disturbance and flow separation were first indicated in the present tests. (Wing stations in figs. 10 and 11 are designated $2y/b$, where y is the distance of the wing station from the plane of symmetry and b is the wing span.) The determination of the critical Mach

numbers involved extrapolation, by the von Kármán method, of pressure-distribution data obtained at Mach numbers 0.02 to 0.06 less than the critical value. The airplane lift coefficients were correspondingly modified by means of the Prandtl-Glauert relation. The pressure-distribution measurements were obtained with static-pressure tubes and therefore, according to the results of reference 1, the critical Mach numbers may be as much as 0.01 higher than would have been obtained from pressure measurements with flush orifices. The critical Mach number at 46 percent semispan, which is the center line of the test panel, was obtained by linear interpolation between the critical Mach numbers at 25 and 63 percent semispan.

A comparison is made in figure 11 of the flow behavior and the critical Mach number obtained in flight and in the Ames 16-foot high-speed tunnel on a 0.3-scale model of the P-47D airplane (reference 2). The comparison of flow characteristics is made on the assumption that tuft behavior is interpreted in the same way in the wind tunnel and in flight. The critical Mach number shown for the wind-tunnel tests was determined from pressure-distribution measurements made with flush orifices at 41 percent semispan.

DISCUSSION OF RESULTS

The sketches of figures 5 to 8 show that, as Mach number or lift coefficient increased, the flow first became unsteady over a small chordwise region; this region then became more extensive, and finally local separation occurred. The region of separated flow originated in the neighborhood of 30 percent chord at high lift coefficients and 45 percent chord at low lift coefficients. The region of separation appeared to extend over not more than 15 percent chord and was followed by a region of unsteady flow beyond which the flow again was steady.

Three distinct regimes of flow are evident in figure 9. At a lift coefficient of 0.10, the flow remained smooth up to a Mach number of 0.73; beyond this Mach number, the flow was unsteady and local flow separation occurred at a Mach number of 0.77. At a

lift coefficient of 0.50, the flow remained smooth up to a Mach number of 0.62 and local flow separation occurred at a Mach number of 0.67. Comparison of these results with the critical Mach number in figure 10 indicates that the flow remained smooth until the critical Mach number was exceeded by 0.05 to 0.08, depending on lift coefficient. Local separation of flow occurred when the critical Mach number was exceeded by 0.10 to 0.13. The Mach number at which compressibility shock was first evident in the wake at 63 percent semi-span was apparently exceeded by 0.05 to 0.08 before local flow separation occurred.

The comparison in figure 11 of flight and wind-tunnel results indicates that the critical Mach number was 0.03 to 0.04 higher, depending on lift coefficient, in the flight tests than in the tests of the 0.3-scale model of the P-47D airplane in the Ames 16-foot high-speed tunnel. The Mach number at which local separation occurred was 0.02 higher in flight than in the tunnel. The flight and tunnel results are therefore in good agreement.

CONCLUDING REMARKS

Flight tests made at high speeds with a P-47D airplane to determine the flow characteristics, as indicated by wool tufts attached to a section of the upper surface of the wing, showed that the flow remained smooth until the critical Mach number of the wing section was exceeded by 0.08 at a lift coefficient of 0.10 and by 0.05 at a lift coefficient of 0.50. Beyond these Mach numbers, the tufts indicated unsteadiness of flow and, finally, local separation when the Mach number exceeded the critical value by 0.13 at a lift coefficient of 0.10 and by 0.10 at a lift coefficient of 0.50. The region of separated flow originated in the neighborhood of 30 percent chord at high lift coefficients and 45 percent chord at low lift coefficients. The region of separation appeared to extend over not more than 15 percent chord. Comparison of these results with results obtained in the Ames 16-foot high-speed tunnel on a 0.3-scale model of

the P-47D airplane indicated good agreement between the flight and tunnel results.

Langley Memorial Aeronautical Laboratory
National Advisory Committee for Aeronautics
Langley Field, Va.

REFERENCES

1. Zalovcik, John A., and Daum, Fred L.: Flight Investigation at High Mach Numbers of Several Methods of Measuring Static Pressure on an Airplane Wing. NACA RB No. L4H10a, 1944.

2. Hamilton, William T., and Boddy, Lee E.: High-Speed Wind-Tunnel Tests of a 0.3-Scale Model of the P-47D airplane. NACA ACR No. 5D20, 1945.

[redacted]

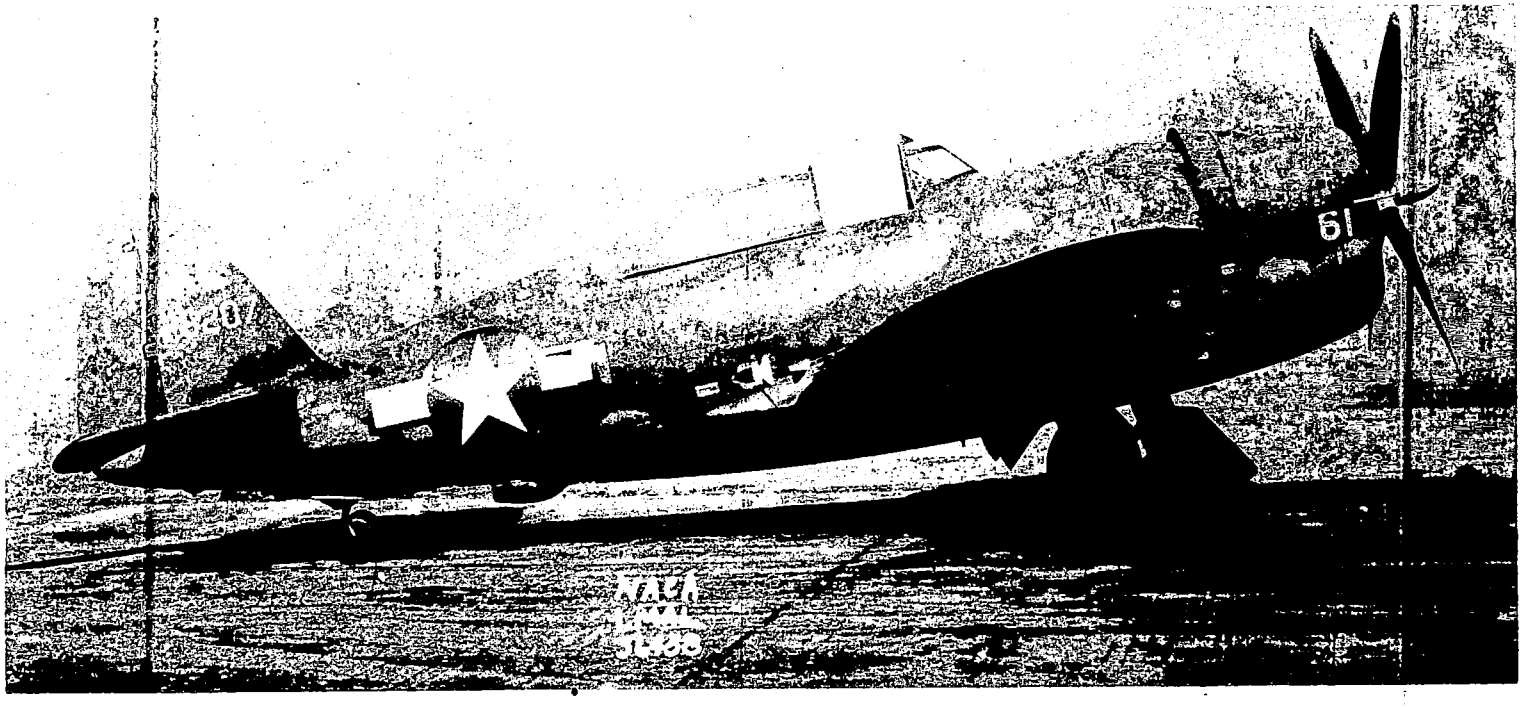

Figure 1.- Republic P-47D airplane used for tuft surveys.

[redacted]

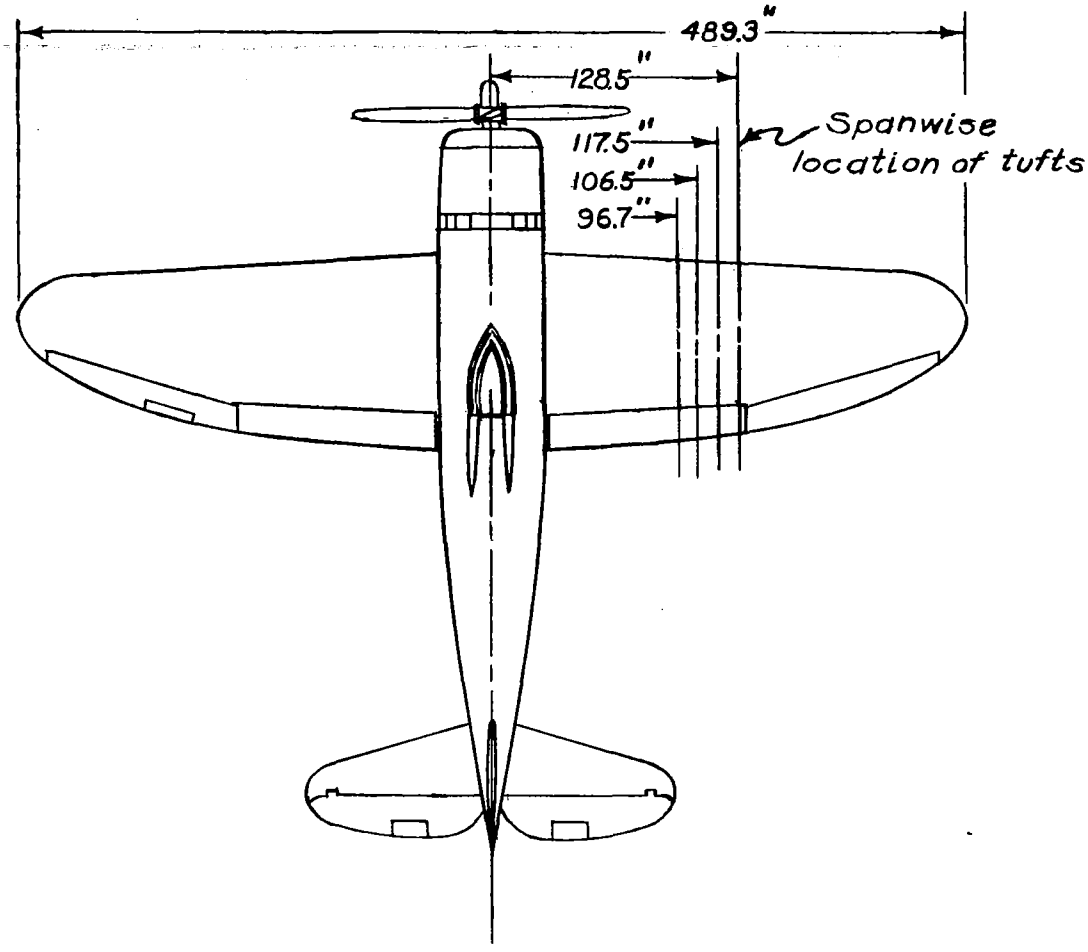

NATIONAL ADVISORY
COMMITTEE FOR AERONAUTICS

[redacted]

Figure 2. - Plan view of Republic P-47D airplane showing spanwise location of tufts.

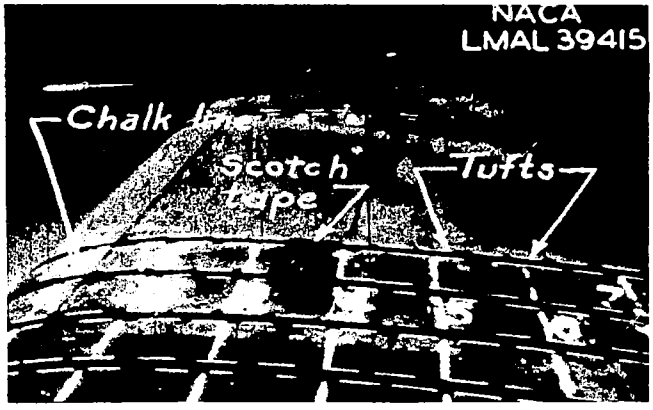

Figure 3.- Test panel on right wing of Republic P-47D airplane, showing rows of tufts at 39.5, 43.5, 48, and 52.5 percent semispan. Numbers identify spanwise lines at intervals of 10 percent chord.

[redacted]

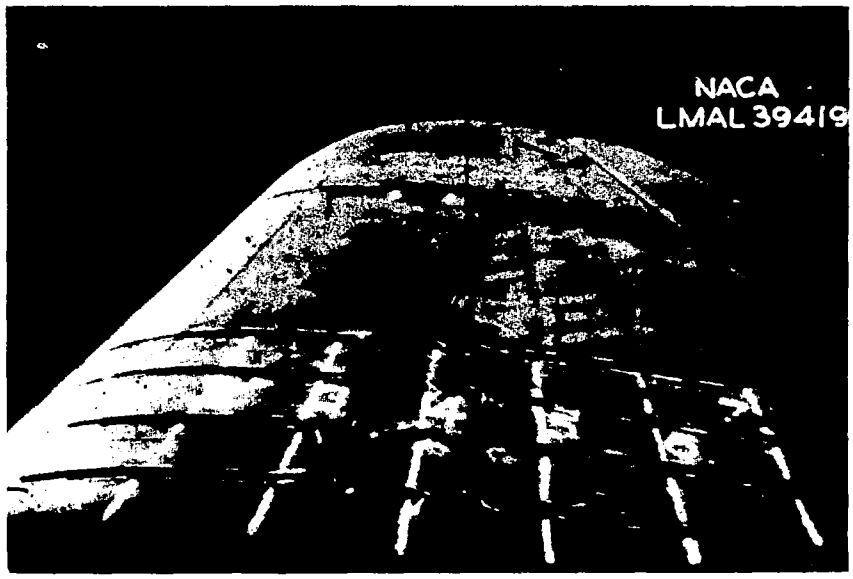

Figure 4.- Photograph showing tuft behavior at an airplane lift coefficient of 0.49 and at an airplane Mach number of 0.71.

[redacted]

[redacted]

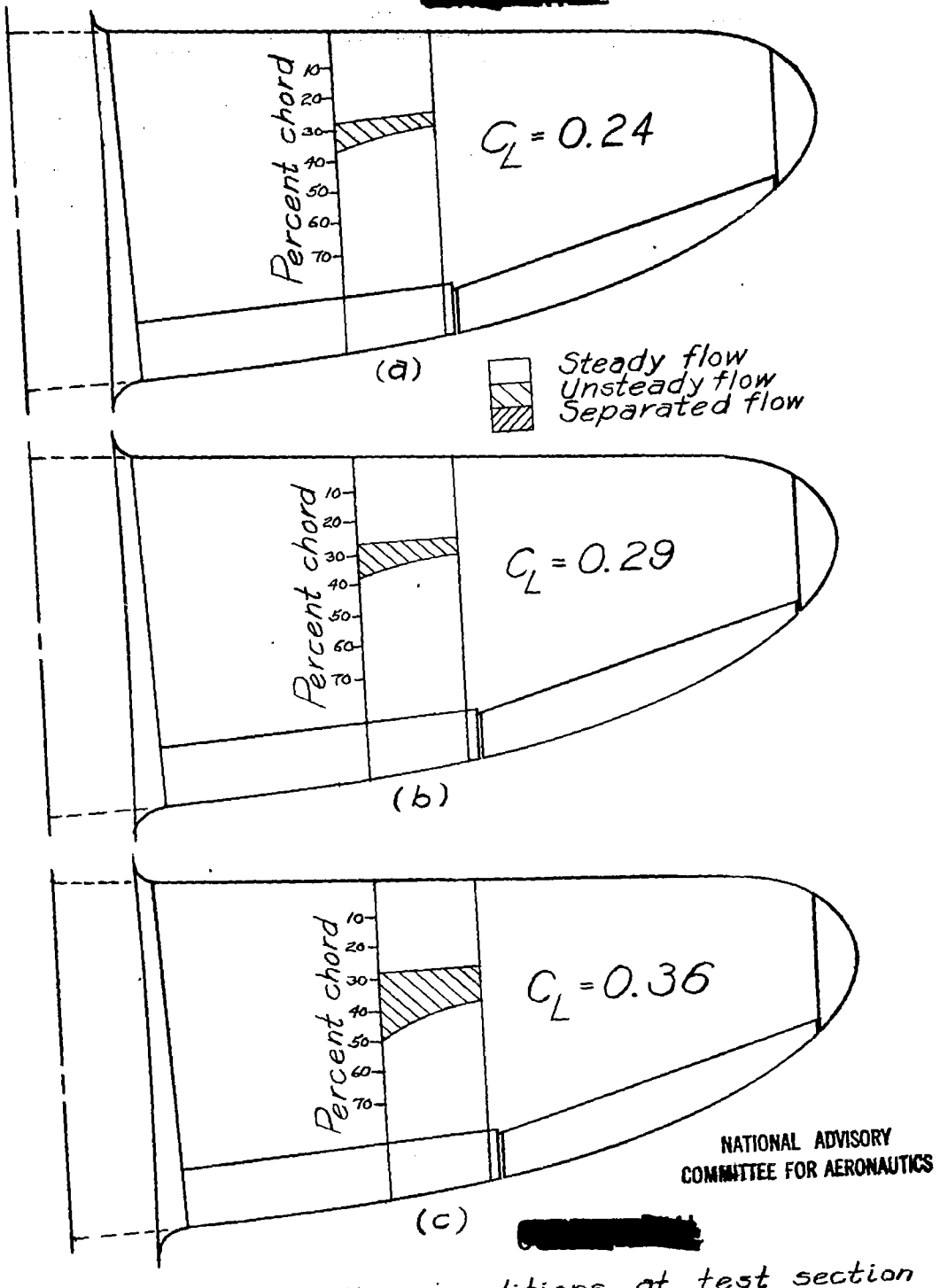

[redacted]

Figure 5.- Flow conditions at test section for an airplane Mach number of 0.69.

Fig. 5d-f

[redacted]

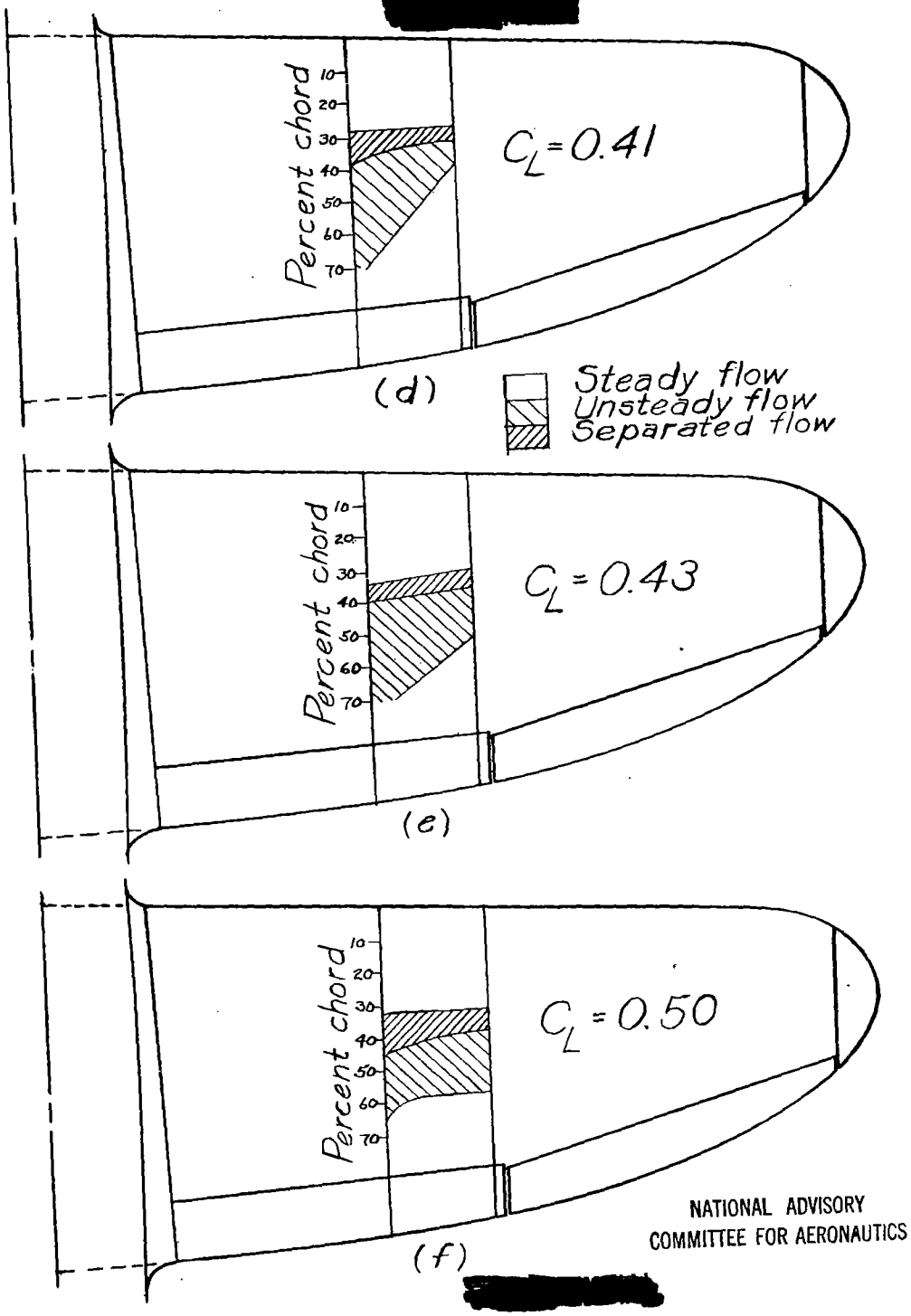

[redacted]

Figure 5.- Concluded.

[redacted]

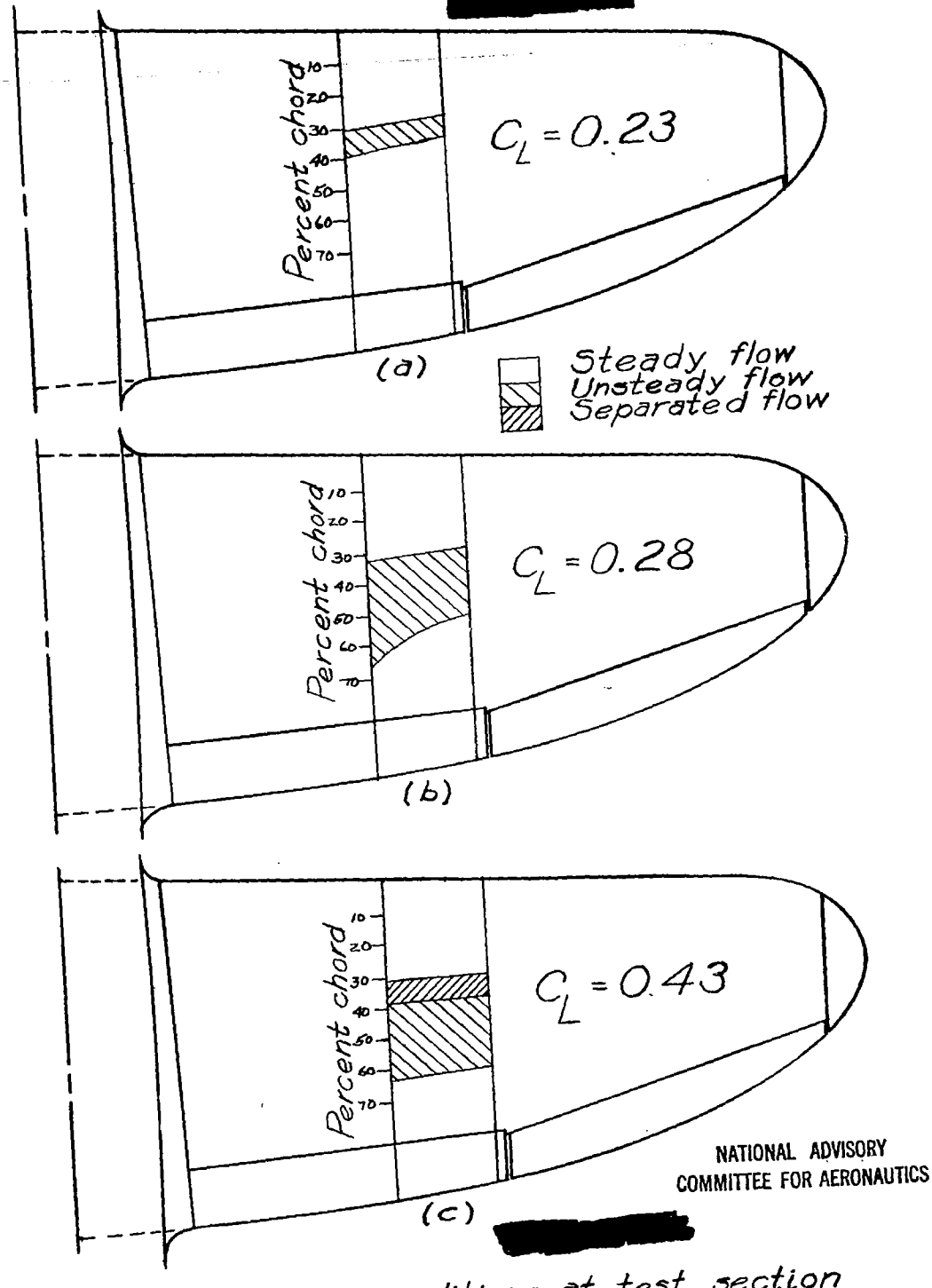

[redacted]

Figure 6.- Flow conditions at test section for an airplane Mach number of 0.71.

Fig. 6d

[redacted]

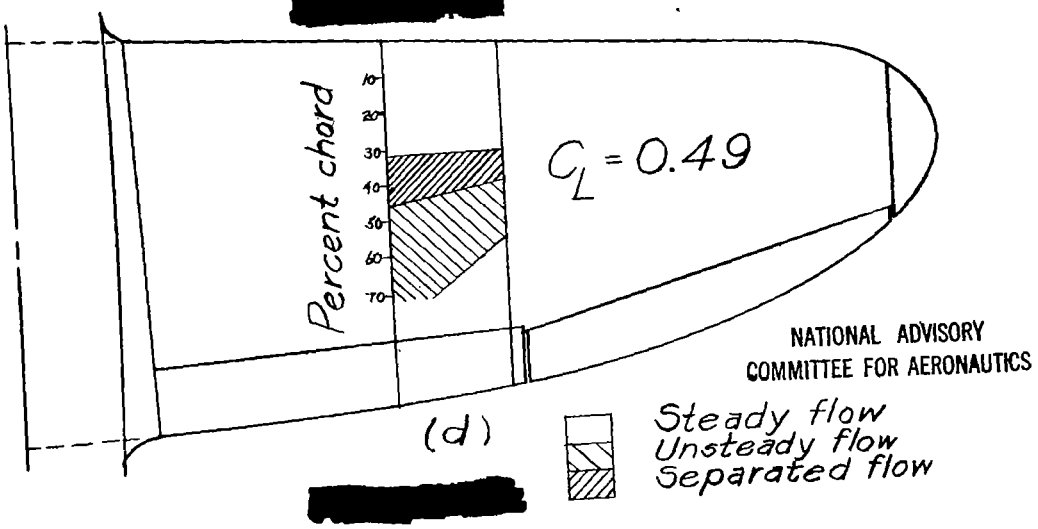

[redacted]

Figure 6.- Concluded.

[redacted]

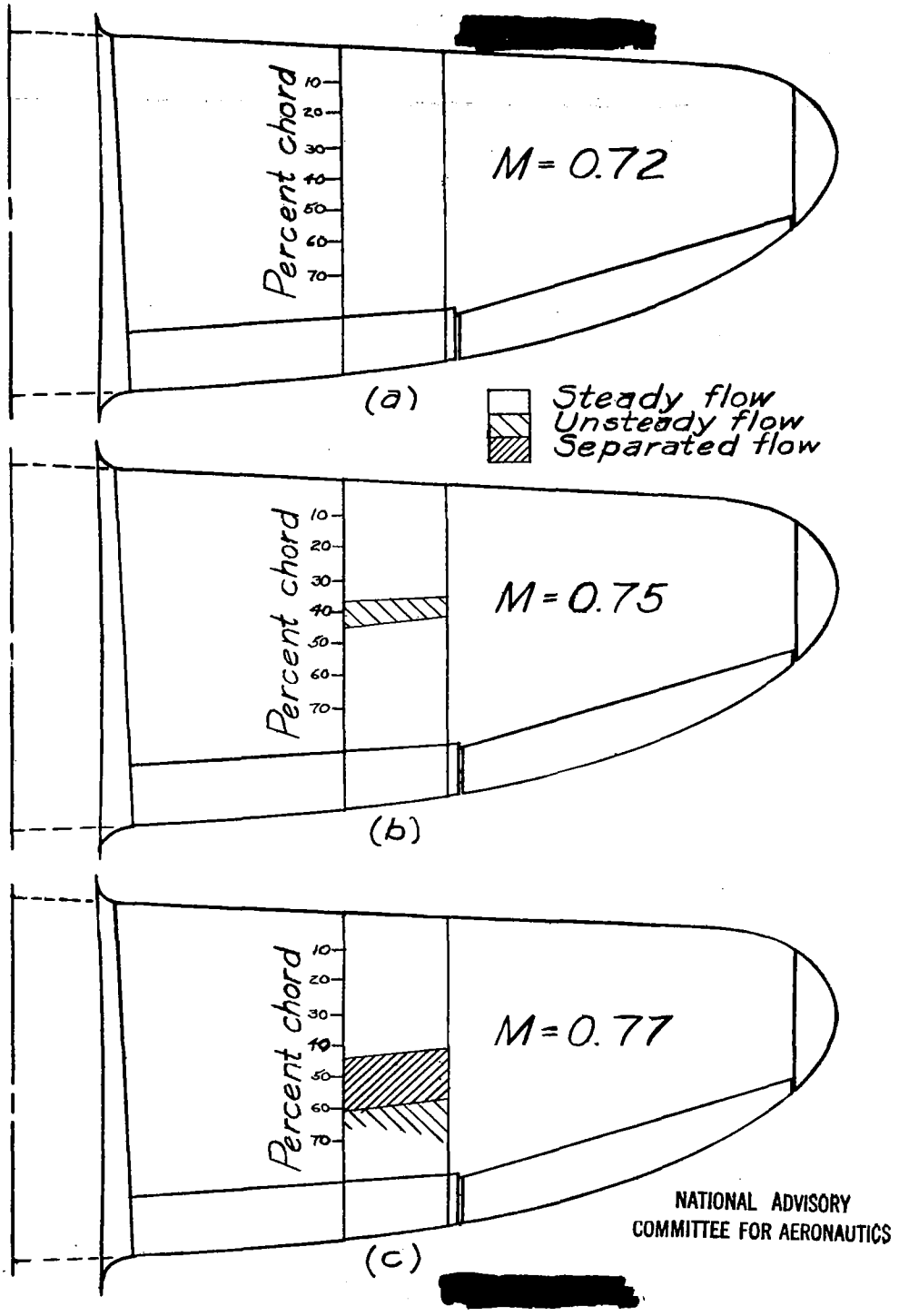

[redacted]

Figure 7.- Flow conditions at test section for an airplane lift coefficient of 0.13.

[redacted]

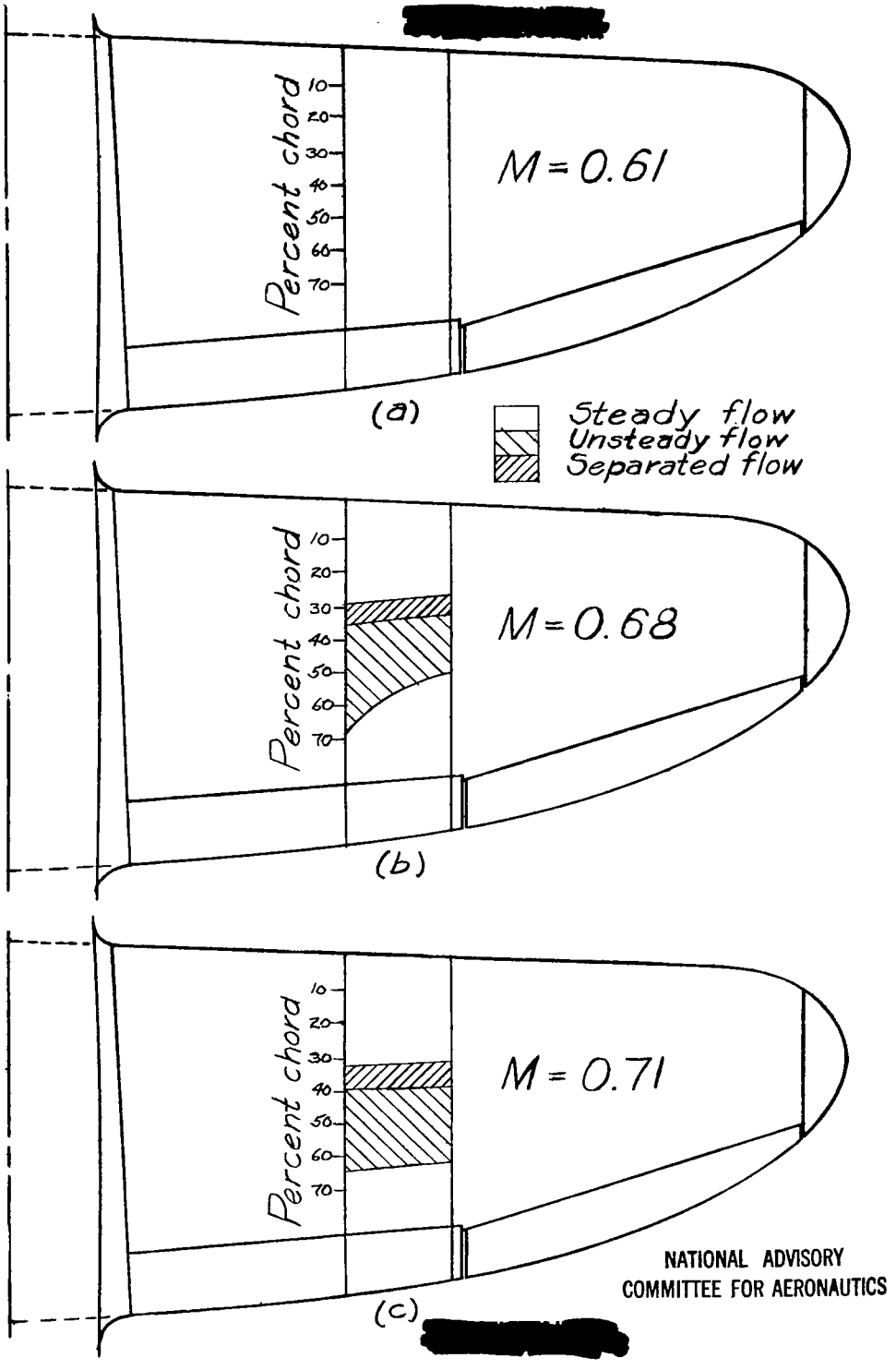

[redacted]

Figure 8.- Flow conditions at test section for an airplane lift coefficient of 0.43.

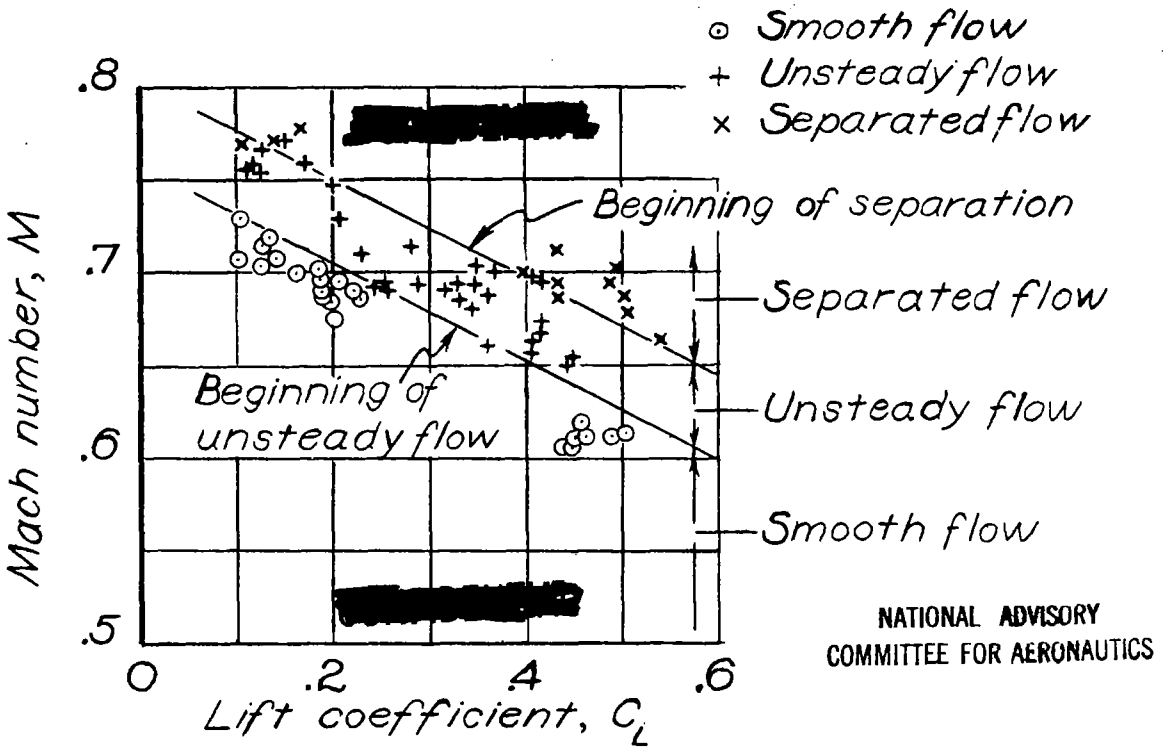

Figure 9.- Flow conditions indicated by tuft behavior.

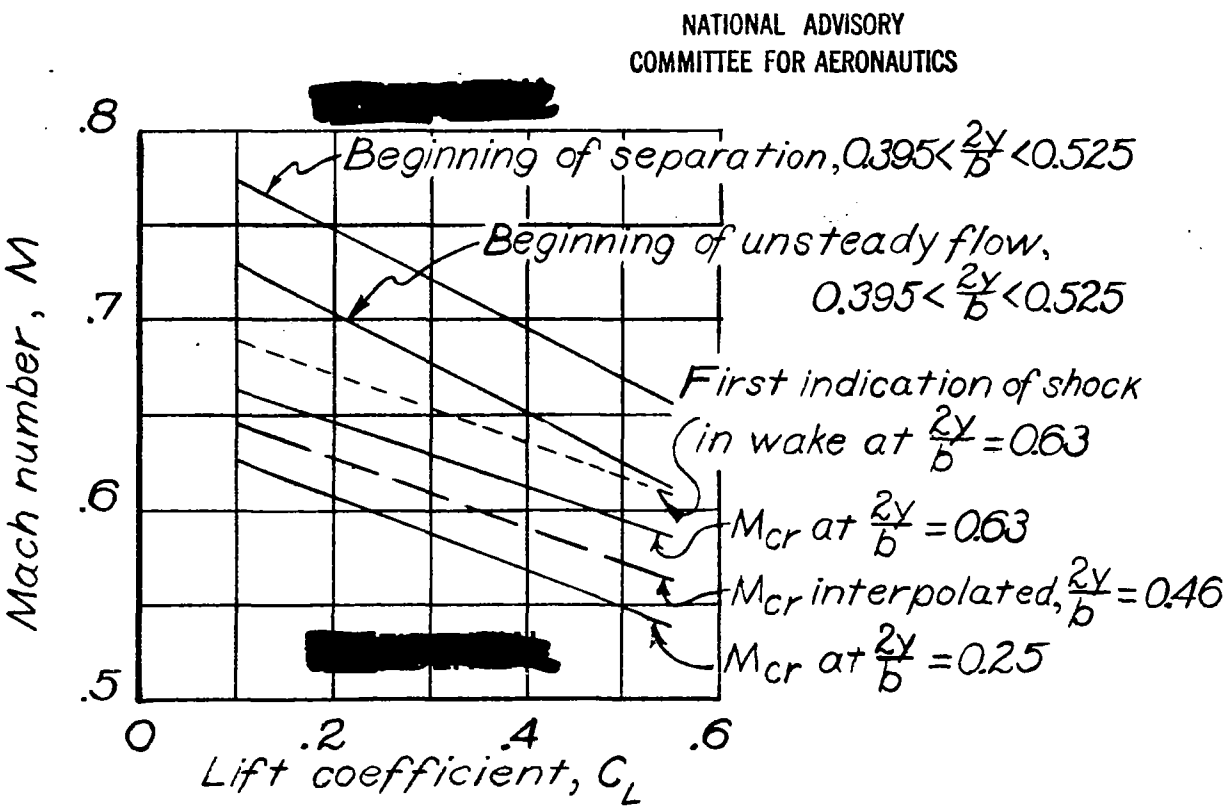

Figure 10.- Comparison of flow conditions, indicated by tuft behavior, with critical Mach number and with Mach number at which compressibility shock was first evident in wake. P-47D airplane.

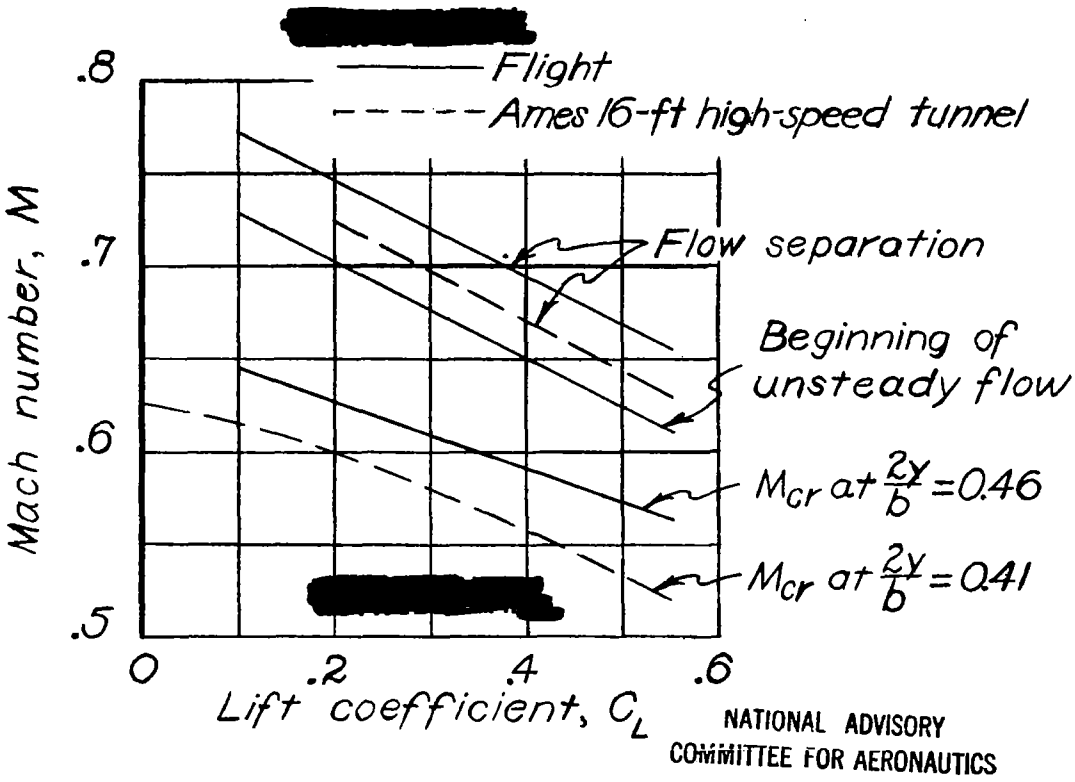

Figure 11.— Comparison of results obtained in flight on P-47D airplane and in Ames 16-foot high-speed tunnel on 0.3-scale model of P-47D airplane.

3 1176 00160 7424