MAR 20 1946

RB No. 3K15

NATIONAL ADVISORY COMMITTEE FOR AERONAUTICS

WARTIME REPORT

ORIGINALLY ISSUED

November 1943 as
Restricted Bulletin 3K15

WIND-TUNNEL TESTS OF A PISTON-TYPE CONTROL BOOSTER ON AN AIRFOIL AND AILERON MODEL

By J. D. Bird and Robert A. Mendelsohn

Langley Memorial Aeronautical Laboratory
Langley Field, Va.

NACA

WASHINGTON

N A C A LIBRARY
LANGLEY MEMORIAL AERONAUTICAL
LABORATORY
Langley Field, Va.

NACA WARTIME REPORTS are reprints of papers originally issued to provide rapid distribution of advance research results to an authorized group requiring them for the war effort. They were previously held under a security status but are now unclassified. Some of these reports were not technically edited. All have been reproduced without change in order to expedite general distribution.

3 1176 01354 3427

NATIONAL ADVISORY COMMITTEE FOR AERONAUTICS

RESTRICTED BULLETIN

WIND-TUNNEL TESTS OF A PISTON-TYPE CONTROL BOOSTER ON AN AIRFOIL AND AILERON MODEL

By J. D. Bird and Robert A. Mendelsohn

SUMMARY

Measurements of control moments were made in the NACA stability tunnel to determine the operational characteristics of a piston-type control booster on an aileron. The tests were made on a 6-foot-span and 4-foot-chord airfoil which extended completely across the 6-foot-square test section. The chord of the aileron was 31 percent of the airfoil chord and the aileron span was one-half that of the airfoil.

The booster was so constructed and installed that pressures picked up from the air stream below the wing acted on a pair of pistons. The resulting force was transmitted from the pistons to the aileron by a system of linkages and gears in such a way that the moment produced by the booster increased almost linearly with aileron deflection in opposition to the hinge moment of the aileron.

The data are presented in the form of curves of pressure coefficients acting on the pistons, hinge-moment coefficients, and booster coefficients plotted against aileron deflection. The results of the investigation indicate that fairly good balance of aileron hinge moments should be obtained by the use of this type of booster.

INTRODUCTION

With the advent of the high-speed airplane and the increased demand for higher rolling velocities, some means must be provided to keep stick forces within the limit of the pilot's strength. Several devices for attaining this condition are in present use, such as Frise ailerons, horn

balances, internal balances, tabs, and beveled aileron trailing edges, but most of these devices have various difficulties which limit their use.

A new device, the piston-type control booster, has been suggested as a method for obtaining aileron hinge-moment balance. This device utilizes the force produced by the action of air pressure on a pair of pistons. The pressure is to be obtained from a pair of ports, one facing forward and the other rearward, which are suitably located in the air stream. If the pistons are connected to the aileron with a system of linkages and gears, the booster can be made to supply a counteracting moment that varies with aileron deflection in almost any desired manner; for the present series of tests a booster linkage producing practically a straight line variation of moment with aileron deflection was chosen. This system would make feasible the use of plain sealed ailerons with the consequent low drag, simplicity of construction, and high aerodynamic efficiency. Because the aileron-balance area forward of the hinge would be unnecessary, the loads on the hinges and aileron structure would be less and thus allow the use of lighter construction than is required with most conventional balances. The piston-type balance apparently could be more easily manufactured to give a given hinge-moment coefficient than the conventional aerodynamic balances, and the adjustments required to obtain and maintain a close balance of hinge moments on each aileron could be somewhat reduced.

The present investigation was made to determine the characteristics of a piston-type control booster that was designed to be approximately the correct size for balancing one aileron on a large modern pursuit airplane. Tests were made at two angles of attack and two airspeeds for the conditions of the aileron with booster, the aileron alone, and the booster alone. The data are presented in the form of curves of pressure coefficients acting on the pistons, booster-moment coefficients, and hinge-moment coefficients plotted against aileron deflection.

APPARATUS AND MODELS

A 48-inch-chord airfoil model of approximate NACA 23012 airfoil contour equipped with a plain sealed aileron was fastened between the walls of the 6-foot-square test section of the NACA stability tunnel as shown in figure 1.

The airfoil was made of laminated pine with cutaway portions on the upper surface for the aileron linkage and was covered with a metal plate rolled to the contour of the upper surface. The aileron was made of sheet dural and was designed with a straight taper from the hinge line to the trailing edge; because of difficulties encountered in construction, the aileron had a slightly turned down trailing edge. No great care, however, was maintained to have the aileron or airfoil conform to the designated airfoil contour because of the intention to represent ailerons in general.

The aileron was connected by means of a shaft to a calibrated spring and sector hinge-moment balance, which was rotated for changes in aileron deflection. This shaft was geared to the control booster, which converted pressures obtained from two ports located below the airfoil in the tunnel into moments opposing the hinge moments produced by the aileron. The positions of the ports, one facing upstream and one downstream, are shown in figure 2. The method of connection of these ports to the booster is shown in figure 3.

The control booster, which was designed to give sufficient boost to balance approximately one aileron on the P-47 airplane or two ailerons on the P-51 airplane, consists of a pair of pistons mounted in two diametrically opposed cylinders and connected by a system of linkages; thus, the force acting on the pistons is converted into a moment which varies almost linearly with aileron deflection. The booster was connected to the aileron shaft by means of spur gears that gave a ratio of booster motion to aileron motion of 2.4. The booster was installed with the pistons at the outer extremities of their travel when the aileron deflection was zero. With this installation, the booster gave no moment with zero aileron deflection. Figures 3 and 4 show the details of the booster mechanism.

SYMBOLS

The hinge moments and pressures were reduced to standard coefficients, which are defined as follows:

C_{h_a} aileron hinge-moment coefficient $(H_a/qb_ac_a^2)$

C_b booster-moment coefficient $(M_b/P_R qad)$. For the particular ratio of wing and aileron dimensions to booster dimensions used for these tests,

$$C_b = \left(\frac{94.9}{P_R}\right) C_{h_a}$$

P_R resultant pressure coefficient $(\Delta p/q)$

Δp pressure difference across either piston in booster

H_a aileron hinge moment

M_b booster moment about aileron hinge line

b_a aileron span

c_a aileron chord

a cross-sectional area of one booster piston

d length of center booster link (2.19 in. as shown on fig. 3)

q dynamic pressure of air stream $(\frac{1}{2}\rho V^2)$

V free-stream velocity

ρ density of air (mass per unit volume)

α angle of attack

δ_a aileron deflection relative to wing; positive when trailing edge is down

TESTS

Measurements of moments were made for the conditions of aileron alone, booster alone, and aileron-booster combination for control disk angles corresponding to a range of aileron deflections from -16° to 18°. Pressures to the booster were measured for the booster alone and for the aileron-booster combination. Tests were made at angles of attack of 0° and 9.5° and at dynamic pressures of 25 and 65 pounds per square foot, corresponding, respectively, to

speeds of approximately 100 and 162 miles per hour. Measurements of the moments produced by the booster alone were also made with these conditions, but with aileron angles of -0.1° and 10.1° for angles of attack of 0° and 9.5°, respectively. Because the moments produced by the booster were large, unstable, and therefore difficult to measure, the range for the high-speed condition was limited.

The aileron hinge moments and the booster moments were measured by a spring and sector balance, and the pressures were read from an alcohol manometer. Because of the large amount of friction in the booster, the moments were measured by approaching, from each direction, the angle corresponding to the desired aileron deflection. Figure 5 shows a typical variation in the booster-moment coefficient C_b obtained by so approaching the angle setting. The average of the two moment readings was used in computing the coefficients presented.

It is believed that a large part of friction in the booster was caused by the cup seal used between the pistons and the cylinder walls; much of this difficulty could be avoided, however, by the use of a close-fitting piston or a packing seal that would not expand with pressure. Another factor contributing to high friction was the dependence of the piston alinement upon a perfect fit of the connector links. Play in the links and unequal friction around the piston periphery caused the pistons to assume an oblique position in the cylinder, which caused binding on the rod passing through the centers of the pistons. During this investigation, an increase in tunnel speed was found to increase appreciably the friction in the booster.

RESULTS AND DISCUSSION

For convenience, the results of the aerodynamic characteristics of the aileron-booster combination and of the booster alone are discussed separately.

<u>Characteristics of aileron alone and aileron-booster combination</u>.- The hinge-moment coefficients, uncorrected for tunnel-wall and blocking effects, are given in figures 6 and 7 for the aileron alone and the aileron-booster

combination. At each of the two angles of attack used in the tests the aileron floated upward, as shown by the position at which the curve of the aileron alone crosses the zero hinge-moment ordinate. The large floating angle was caused by the lift on the wing and by the turned-down trailing edge on the aileron. With booster connected, the floating angle of the aileron reached a very large value because the position of the booster linkage for zero booster moment did not correspond to the position for zero aerodynamic moment of the aileron. The booster linkage could have been set for zero boost at the floating angle of the aileron for any chosen angle of attack, but this position would not correspond at other angles because of the change in aileron floating angle with angle of attack. If the linkage had been set to correspond to the floating angles for the angles of attack tested, the principal result would have been an upward shift of the curves of booster alone and of aileron-booster combination. When the vertical location of the hinge-moment curves is neglected, the curves compare favorably with the hinge-moment characteristics of some of the balanced ailerons now in use.

An inherent characteristic of the booster is that, when the pressure to the booster is held constant, the moment supplied by the booster is a function of aileron deflection and not of aileron hinge moment. Because the pressure-inlet ports of the booster were located below the wing, a change in lift caused a change in local pressure, with the result that the moment produced by the booster was a function of angle of attack and aileron deflection as well as of the angular position of the booster linkage. The variation in pressure supplied to the booster caused by changes in angle of attack and in aileron deflection is shown in figure 8. The pressure decreased with an increase in angle of attack or in aileron deflection. The decrease in pressure caused by an increase in angle of attack is advantageous because the pilot experiences additional "feel" at low speeds where the usual control has a tendency to be light. The decrease in pressure caused by aileron deflection may or may not be advantageous, depending on such factors as the pressure-port location and the type of linkage used between the ailerons.

The curves of pressure coefficient at $\alpha = 0^{\circ}$ (fig. 8) differ by approximately 5 percent for the two values of dynamic pressure used in the tests. It is possible that

a large portion of the difference was caused by scale effect; however, investigation of the exact cause of this difference was not considered important because these pressures would not be the same for an actual installation in an airplane.

The location of the pressure ports would present a different problem for each airplane. The determination of the most suitable location would necessitate surveys to select a location having the most desirable pressures throughout the flight range. This location should, if possible, afford a maximum difference in pressure coefficient across the booster and yet have a favorable relative decrease in pressure coefficient at low speeds to retain an appreciable amount of "feel" in the control. One desirable location for the pressure ports might be on the lower surface of the wing ahead of the aileron in such a position that the increment of pressure due to rolling would counteract the increment of pressure caused by aileron deflection. If such a location could be found, it would keep the actuating pressure almost constant, except for the favorable decrease in pressure caused by change in angle of attack.

Characteristics of booster alone.- Because the moments produced by the booster alone are dependent only on its dimensions and the pressure available, the results obtained with the booster alone are presented in terms of a moment coefficient C_b, which is based on the area a of one piston, the length d of one center booster link, the coefficient of the pressure difference P_R across either piston, and the dynamic pressure q. For the particular aileron-booster combination used in this investigation $C_b = \left(\frac{94.^\circ}{P_R}\right) C_{h_a}$. For any other combination, however, the relation would be different.

The booster-moment coefficient C_b, as computed from the test results and from the dimensions of the booster, are plotted against δ_a in figure 9. The gear ratio between the booster motion and the aileron motion is 2.4 to 1. A theoretical curve, computed from the booster dimensions, that has an almost constant variation with δ_a is presented for comparison. Some of the experimental curves have a slightly greater slope than the theoretical curve and all have a step near zero deflection.

An accumulation of factors such as misalinement of the booster linkage with $\delta_a = .0^\circ$, friction, and play in the booster mechanism probably contributed to the failure of the experimental curves to agree with the theoretical curve. Play in the booster gears and linkage allowed the booster linkage to move through a small angle with no movement of the control disk. In operation this movement, which causes a sudden change in booster moment with no change in control-disk angle, would occur near the zero-moment position of the booster linkage where the moment exerted by the booster changes sign. The result of this movement is shown in figure 9 by the step in the curves at approximately the zero booster-moment position.

A comparison of the experimental results with theory indicates that the moments produced by the booster can be computed fairly closely and that the difference between experiment and theory would decrease with a decrease in friction and lost motion in the booster. The slight difference in slope of some of the experimental curves and the theoretical curve is probably due to looseness in the linkage, which effectively causes a slight change in the ratio of the lengths of the links.

CONCLUDING REMARKS

The investigation of the operational characteristics of a piston-type control booster indicates that fairly good balance of aileron hinge moments should be obtained by use of this booster. Attainment of a close balance of aileron hinge moments may be difficult, however, because the booster moment is not directly dependent upon the aileron hinge moment. Changes in local pressure about an airplane for different flight conditions make it necessary to choose the location for booster pressure ports carefully, the most suitable location on a particular airplane being determined by tests.

Langley Memorial Aeronautical Laboratory,
National Advisory Committee for Aeronautics,
Langley Field, Va.

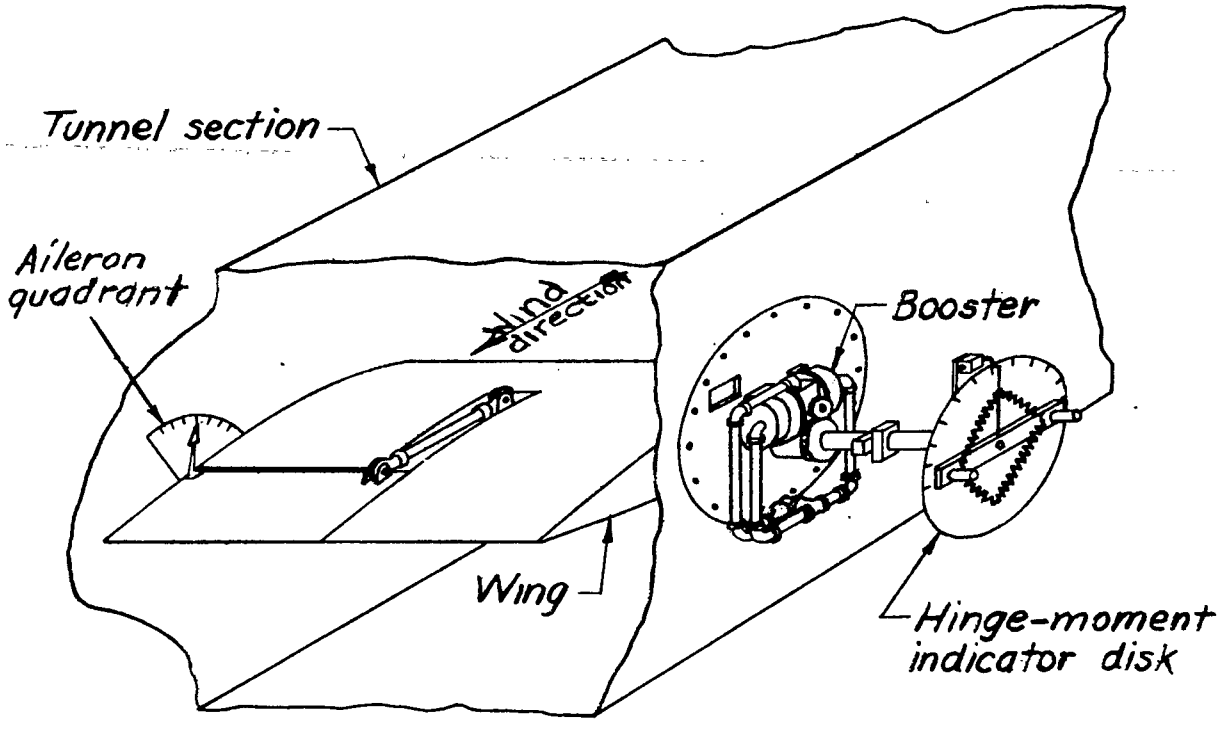

Figure 1. - Schematic diagram of test installation.

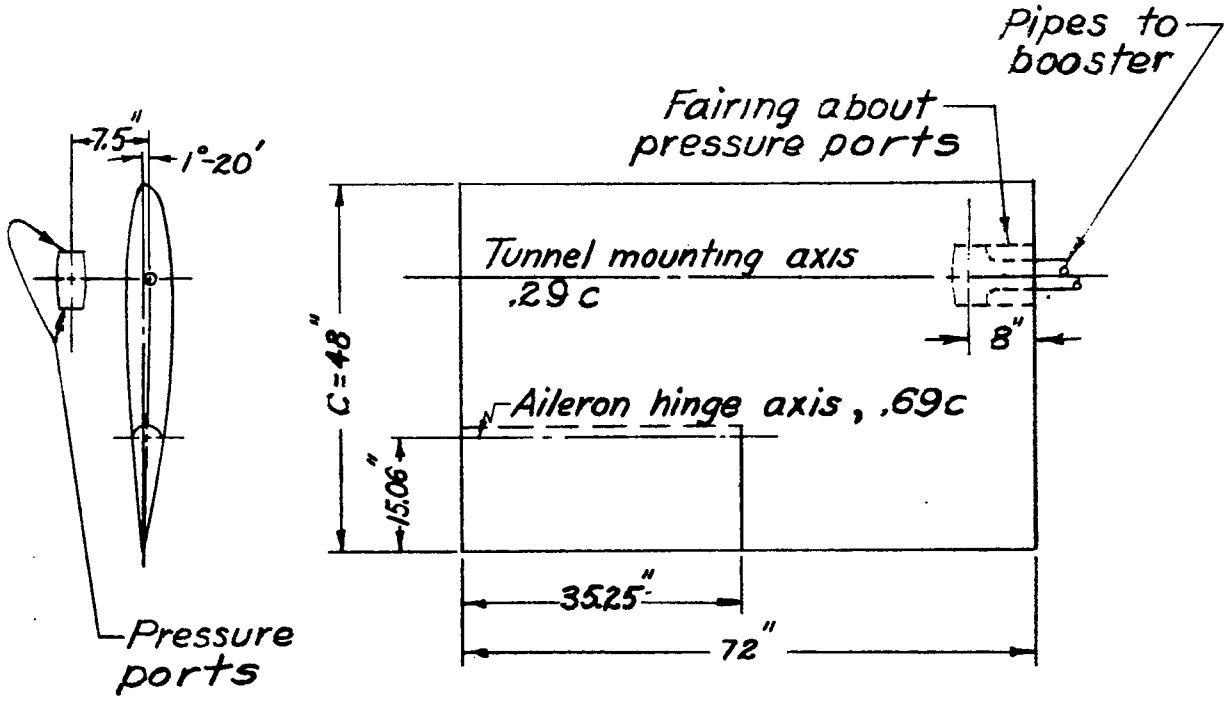

Figure 2. - Wing model details.

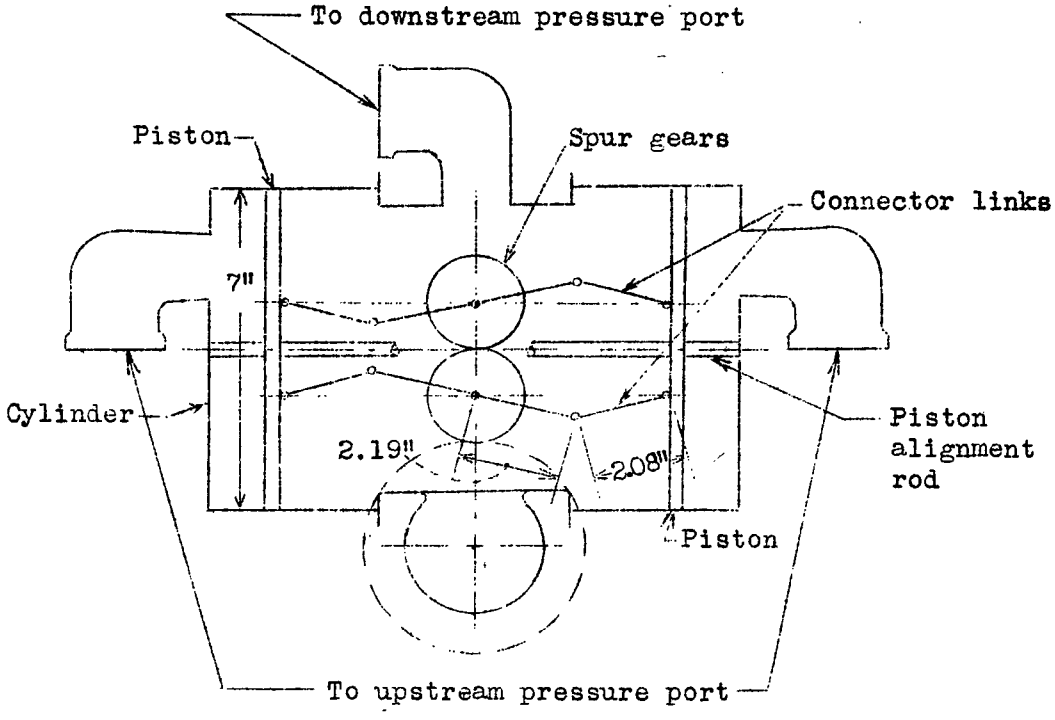

Figure 3.- Schematic diagram of piston-type control booster.

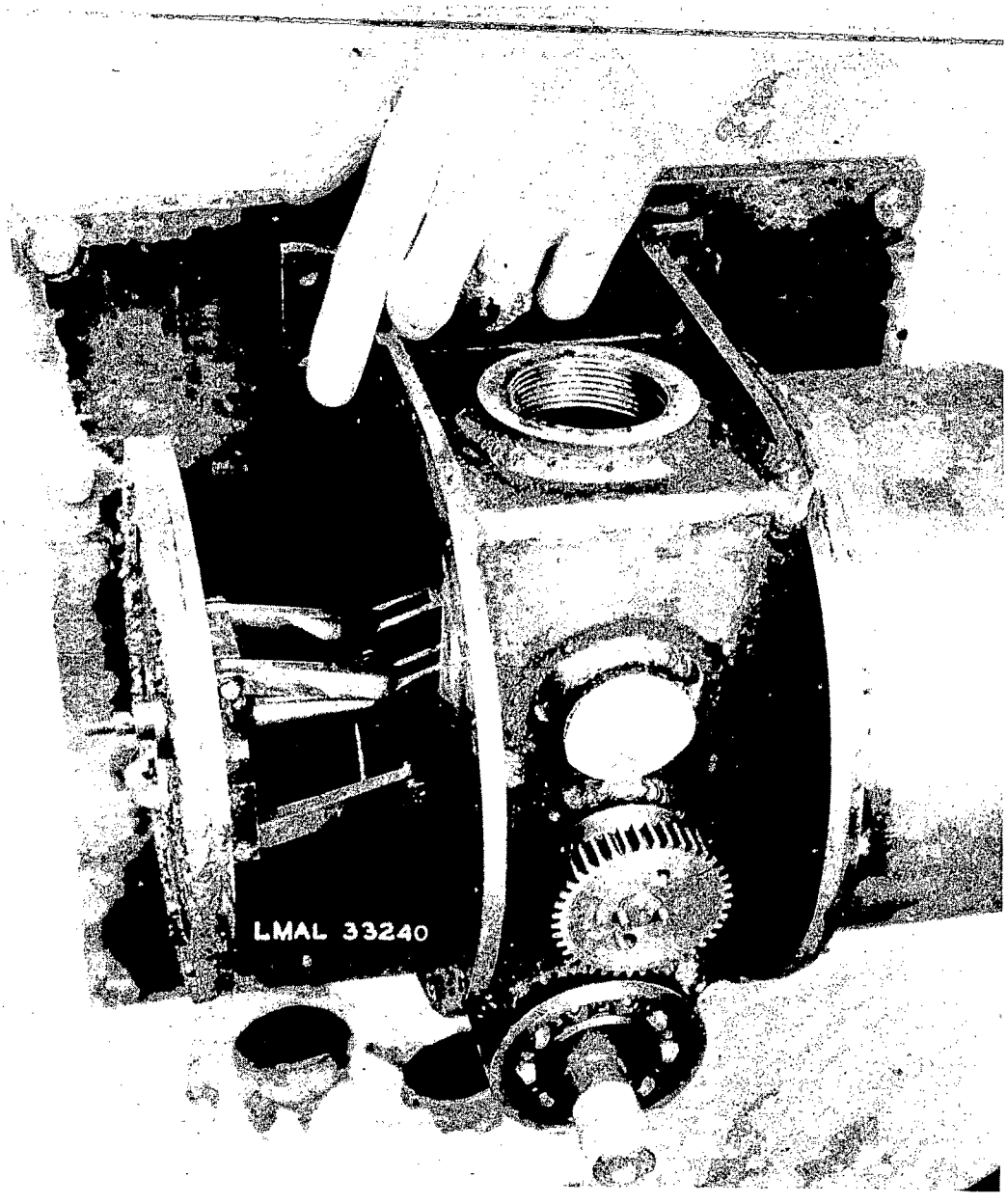

Figure 4.- Photograph of booster mechanism.

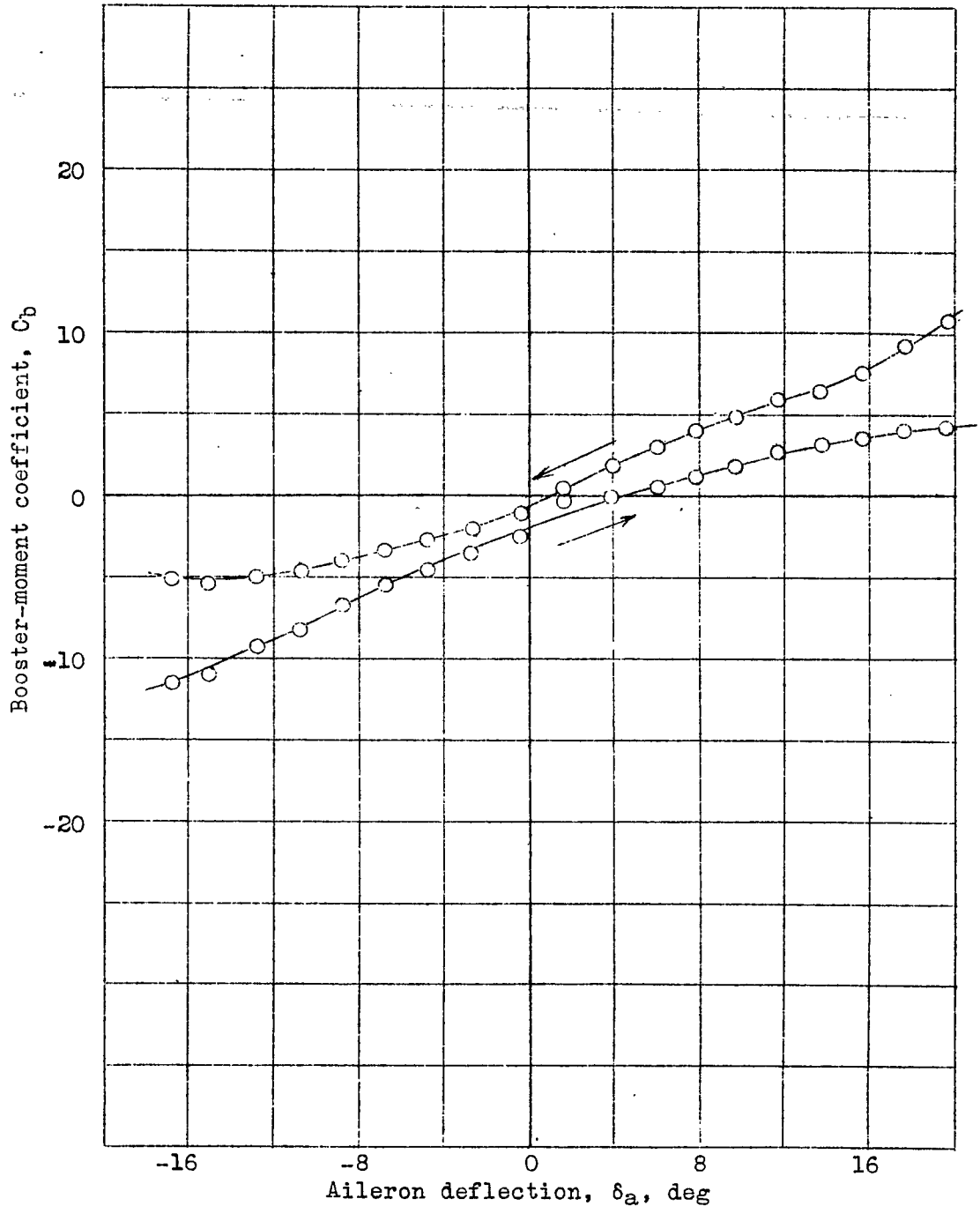

Figure 5.- Effect of friction on the booster-moment coefficient. Moments were recorded while rotating the booster mechanism in the direction indicated by the arrows. $\alpha = 0^{\circ}$; q = 25 pounds per square foot.

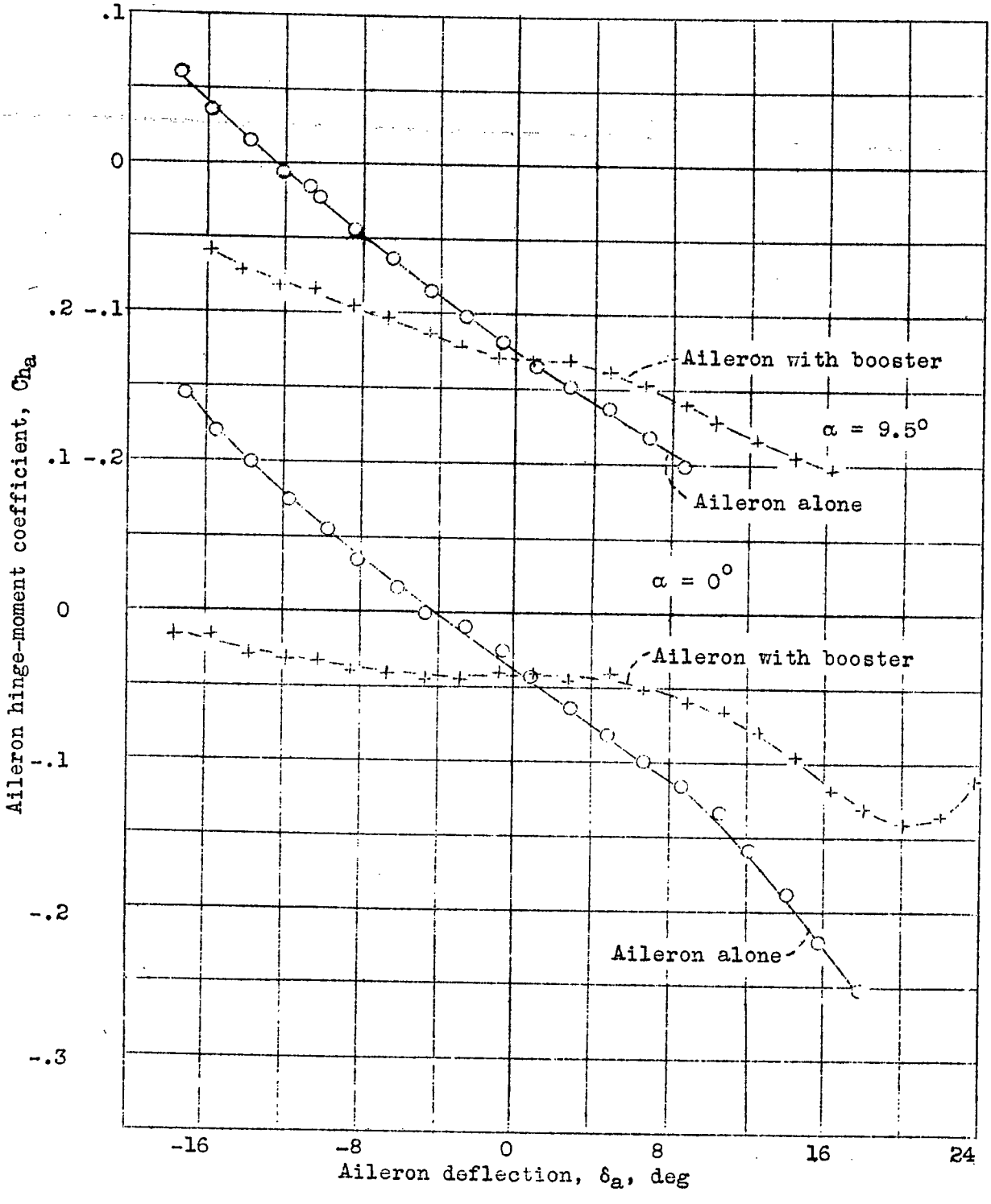

Figure 6.- Effect of the piston-type control booster on aileron hinge-moment coefficients. q = 25 pounds per square foot.

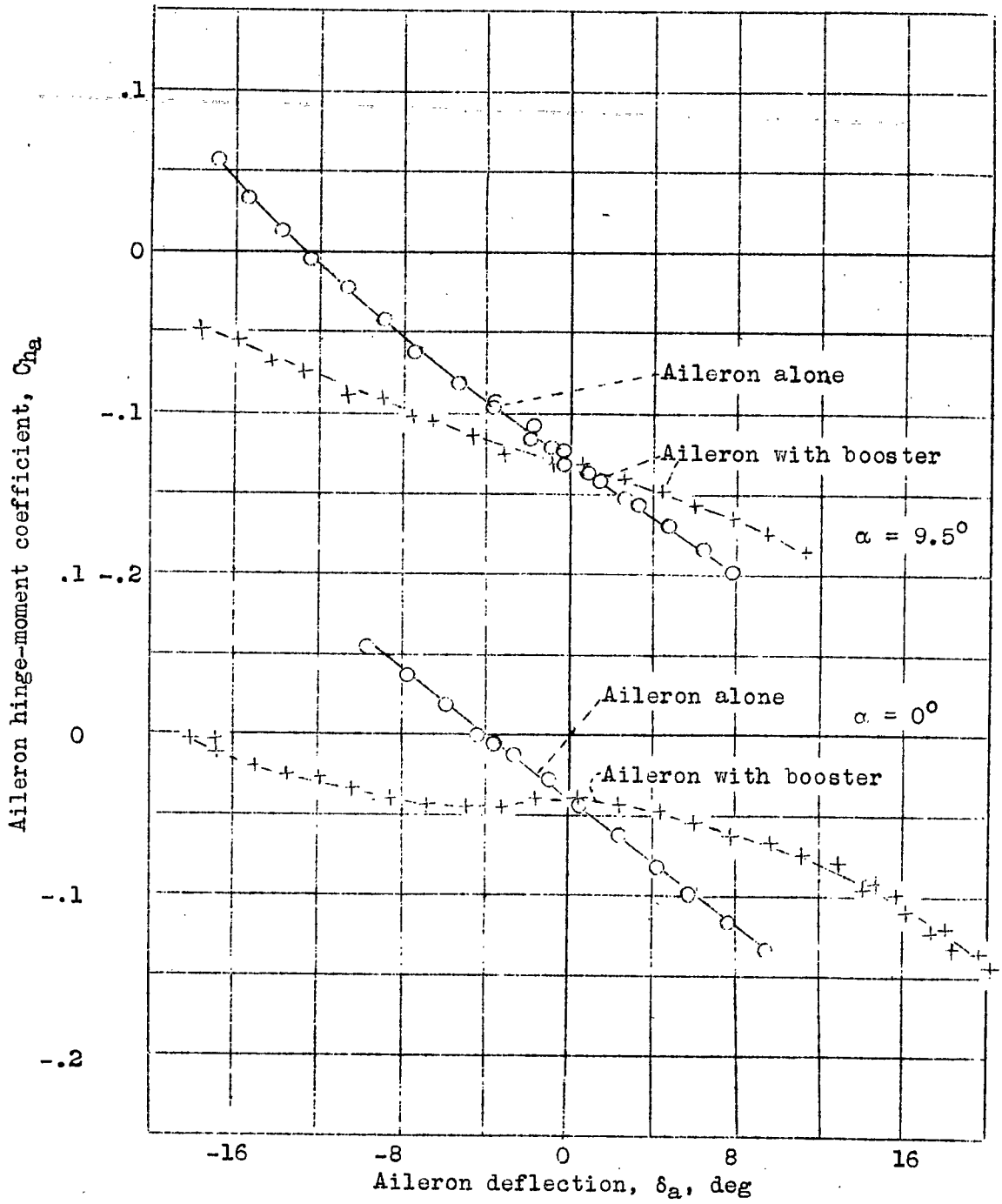

Figure 7.- Effect of the piston-type control booster on aileron hinge-moment coefficients. q = 65 pounds per square foot.

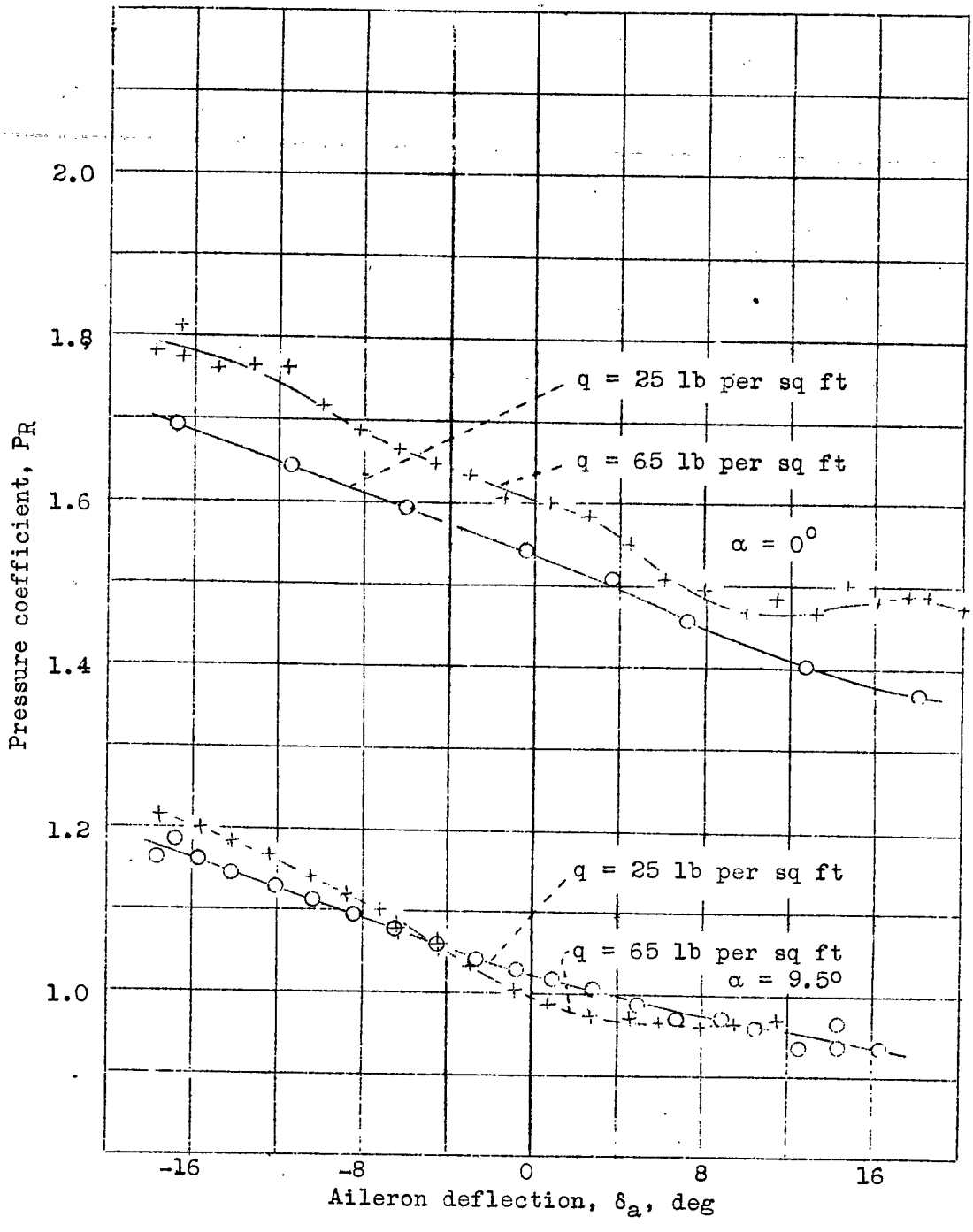

Figure 8.- Pressure coefficients at various aileron angles for the piston-type control booster.

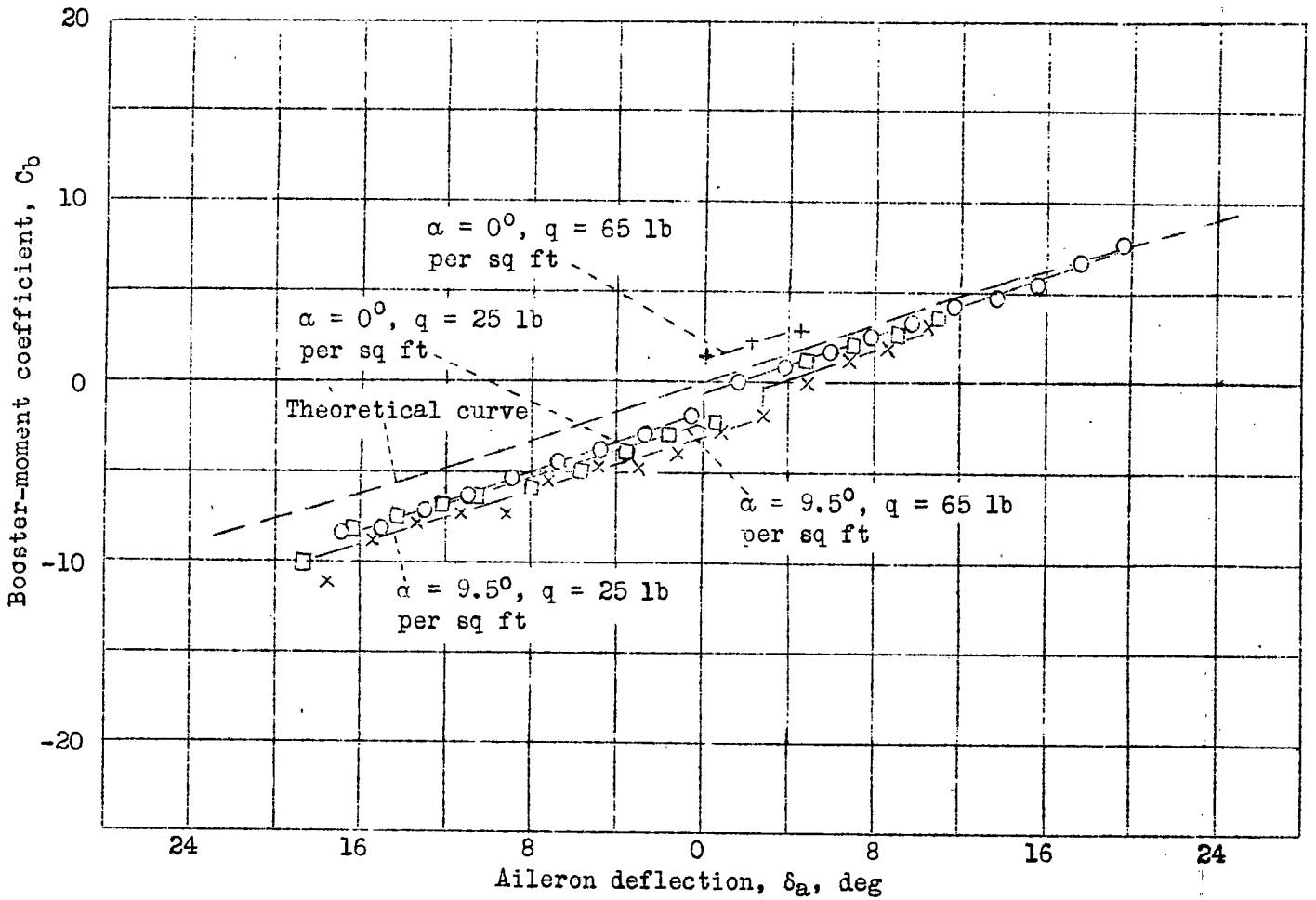

Figure 9.- Booster-moment coefficients at various aileron deflections.