DEC 23 1946

NATIONAL ADVISORY COMMITTEE FOR AERONAUTICS

WARTIME REPORT

ORIGINALLY ISSUED

August 1944 as
Advance Restricted Report E4H22

PERFORMANCE TESTS OF NACA TYPE A FINNED-TUBE EXHAUST HEAT EXCHANGER

By J. George Reuter and S. V. Manson

Aircraft Engine Research Laboratory
Cleveland, Ohio

NACA

N A C A LIBRARY
LANGLEY MEMORIAL AERONAUTICAL
LABORATORY
Langley Field, Va.

WASHINGTON

NACA WARTIME REPORTS are reprints of papers originally issued to provide rapid distribution of advance research results to an authorized group requiring them for the war effort. They were previously held under a security status but are now unclassified. Some of these reports were not technically edited. All have been reproduced without change in order to expedite general distribution.

3 1176 01364 7822

NATIONAL ADVISORY COMMITTEE FOR AERONAUTICS

ADVANCE RESTRICTED REPORT

PERFORMANCE TESTS OF NACA TYPE A FINNED-TUBE EXHAUST HEAT EXCHANGER

By J. George Reuter and S. V. Manson

SUMMARY

Tests have been conducted to determine the thermal and pressure-drop performance and, to a limited extent, the durability of a cross-flow, internally finned, tubular exhaust-heat exchanger designed at the Aircraft Engine Research Laboratory. The tests covered a range of exhaust-gas flows from 3500 to 7500 pounds per hour, cooling-air flows from 3500 to 9500 pounds per hour, and exhaust-gas temperatures from 800° F to 1550° F. The exhaust gas was produced in a gasoline combustion furnace.

The test results show that this exchanger transfers 255,000 Btu per hour at an exhaust-gas flow of 4000 pounds per hour and a cooling-air flow of 3000 pounds per hour for an entrance-temperature difference of 1500° F between the exhaust gas and the cooling air. The corresponding pressure drop of the cooling air is 4.3 inches of water at standard sea-level density and of the exhaust gas, 2.5 inches of water at sea-level pressure and 1500° F entrance temperature. After 90 hours of operation the test unit gave no indication of deterioration.

INTRODUCTION

The exhaust-gas heat exchanger is of current interest as a means not only of providing heated air for aircraft de-icing and cabin heating but also of rendering the exhaust gas invisible by reducing its temperature. In the past few years a variety of designs have been constructed and tested largely under the sponsorship of the NACA. (See references 1 to 6.) The success of many of these investigations has created a growing interest in the general improvement of the exhaust-gas heat exchanger.

The problem of the design of an exhaust-heat exchanger is largely a question of selecting a core structure that combines

low pressure drops and lightness of weight with compactness and durability. Compactness is naturally limited by excessive pressure drops but it may be obtained to a higher degree with one core structure than with another of the same general type if proper consideration is given to the surface distribution. In any heat exchanger the heat dissipation per unit volume is maximum when the heat conductance on one side of the transfer surface is equal to that on the other side. If the heat-transfer surfaces and fluid velocities are such that these conductances are unequal, indirect transfer surface may be added to the inferior side and the flow-passage dimensions adjusted to prevent prohibitive pressure drops. Furthermore, indirect transfer surface added to the cooling-air side is subjected to lower temperatures and hence is less likely to deteriorate.

On the basis of the foregoing considerations, a cross-flow tubular exhaust-heat exchanger in which cooling-air flows through the tubes was designed at the Aircraft Engine Research Laboratory of the NACA at Cleveland, Ohio, in the autumn of 1943. Within each tube are longitudinal, continuous fins welded to the inner wall by a process developed by the Brown Fin-Tube Company of Elyria, Ohio, who constructed the engine unit. The tube ends are welded into thin header plates in a manner intended to provide flexibility against thermal expansion. Tubular instead of plate-type construction was chosen because of its greater strength and lesser susceptibility to warping resulting from uneven heating.

The unit was laboratory tested at AERL during February and March 1944 for thermal and pressure-drop performance and, to some extent, for durability over a range of fluid flows and exhaust-gas temperatures. The results of these tests are presented herein in the form of tables and curves.

NACA TYPE 4 HEAT-EXCHANGER TEST UNIT

The details and general appearance of the NACA heat exchanger are shown in figures 1 and 2. The exchanger core consists of 63 low-carbon steel tubes inserted in thin header plates of the same material. The tubes are about 10 inches long and have an outer diameter of 0.75 inch with a wall thickness of 0.028 inch. Inside each tube eight continuous, longitudinal fins of low-carbon steel are welded, as shown in figure 1. The fins are 0.018 inch thick, 0.183 inch high, and equally spaced along the circumference. The use of stainless-steel material for the entire unit would be preferable but availability considerations prevented such choice.

The tubes are in staggered arrangement with exhaust-gas flow across seven banks of nine tubes each. These tubes are inserted into punched holes in the header plates and are flame-welded at the junction tips, as shown in figures 1 and 2. This construction should provide flexibility. The tube-end welds are exposed to the cooling-air flow and are shielded from the exhaust gas. This position of extended surface and welded joints should favor the durability of the exchanger.

The weight of this heat exchanger, as received from the factory and as shown in figure 2, was 25.5 pounds including flanges and rib-strengthened plates covering the no-flow faces. Before the exchanger was mounted for testing, the flanging was changed to provide a more convenient and leak-proof installation. The weight might be reduced by the use of thinner metal for tube walls and fins, but in this connection there is a question of durability that requires further investigation.

TEST SETUP

A diagram of the test setup is shown in figure 3. The test equipment consisted essentially of an exhaust-gas producer, the heat-exchanger test unit, ducting, flowmeters, and temperature- and pressure-measuring instruments. Both the cooling air and the air required for combustion were obtained from the laboratory combustion-air supply; the respective flows were controlled by pressure-regulated butterfly valves. The cooling air flowed through the tubes and the exhaust gas flowed across the tubes of the exchanger. Flow rates were measured upstream from the exchanger by means of calibrated thin-plate orifices installed according to A.S.M.E. specifications.

Entrance and exit fluid temperatures were measured by thermocouples placed across each flow section at distances from the core faces as shown by figure 4. Cooling-air temperatures were indicated on a self-balancing, direct-reading potentiometer; exhaust-gas temperatures were indicated on a manually balanced potentiometer. In the exhaust stream were quadruple-shielded chromel-alumel thermocouples, three at the entrance of the heat exchanger and three at the exit. One of each set of three was a General Electric thermocouple; the other two were constructed at this laboratory with a spiral shield of four turns. The readings obtained from the three thermocouples at each station were in good agreement. Unshielded iron-constantan thermocouples were used in the cooling-air stream, two at the upstream side of the exchanger and sets of six placed diagonally across each of two sections downstream from the exchanger.

The test unit was enclosed in an insulating cement 2 inches thick. The insulation was extended along each duct beyond all thermocouple stations to prevent error due to heat losses to the room. The entire duct between the exhaust-gas producer and the test unit was insulated in the same manner. Upstream of one of the downstream sections (station C) were mixing baffles, as indicated in figure 4. When the exhaust-gas temperature was high (1500° F to 1550° F) the indicated temperature at station C was about 4° F lower than the indicated temperature at station B. This difference in indicated temperatures decreased with exhaust-gas temperature and was, in all cases, less than 2 percent of the cooling-air temperature rise. Since the insulation on the duct walls prevented heat loss of sufficient magnitude to cause appreciable temperature drop, the difference in temperature indications between stations B and C is attributed to radiation from the downstream header plate of the exchanger to the thermocouples at station B. The thermocouples at station C could not be thus affected because of the shielding effect of the baffles and the intervening 90° elbow. The temperature rise was computed from temperatures obtained from stations A and B, because it was assumed that practically equal radiation effects existed at these two stations and that the error due to radiation would be canceled in the temperature difference.

Static pressures upstream and downstream from the exchanger were measured in both fluid streams for stations at distances from the core faces given in figure 4. At each station a pressure tap was installed at the center of each face of the rectangular section. The four taps of each section were connected through a piezometer ring to a manometer. Pressure-tap stations were between thermocouple stations and the exchanger.

TEST PROCEDURE

The tests consisted of 12 series of runs that involved a total of about 90 hours of testing time. In each series the fluid weight flows were kept as nearly constant as possible and the exhaust-gas entrance temperature was varied in increments of about 200° F by changing the amount of gasoline supplied to the exhaust-gas producer. The cooling-air inlet temperature, though not controlled, remained nearly constant at 65° F ±10° F throughout the tests. The fuel-air ratio of the exhaust gas varied from 0.014 to 0.025 depending on the exhaust-gas temperatures desired.

The approximate exhaust-gas flows, the approximate cooling-air flows, and the ranges of gas-inlet temperatures used are given in the following table:

Exhaust-gas flow rate, W_e (lb/hr)	Cooling-air flow rate, W_a (lb/hr)	Range of gas-inlet temperatures (in steps of approximately 200° F (°F)
3500	3500	1100 to 1500
	5400	800 to 1500
	7200	900 to 1500
	9300	900 to 1550
5400	3400	950 to 1500
	5400	1000 to 1500
	7400	850 to 1550
	9450	850 to 1350
7200	3700	1250 to 1500
	5450	1100 to 1500
	7400	1000 to 1500
	9400	900 to 1500

After the tests, the unit was checked for leakage under a pressure of 4 inches of mercury. No leaks were detected in the core proper but a slight leak was found in a welded joint in the casing near a flange. Under the leak-test pressure of 4 inches of mercury, the measured flow through this leak was about 0.001 pound per second.

All the important data obtained in these tests are summarized in table I.

All the symbols used in the analysis are defined below:

c_p specific heat at constant pressure, (Btu)/(lb)(°F)

H rate of heat exchange between fluids, (Btu)/(hr)

T fluid temperature, (°F)

τ no-flow length, (in.)

W weight flow, (lb)/(hr)

p_{en} static pressure of fluid at entrance of exchanger, (in. Hg absolute)

Δp pressure drop across exchanger, (in. H_2O)

ΔT temperature change of fluid across exchanger, ($^{\circ}F$)

$\Delta T_e'$ temperature change of exhaust gas computed from heat balance equation, $\left[\Delta T_e' = W_a c_{p_a} \Delta T_a / W_e c_{p_e}\right]$

η_e cooling effectiveness of exchanger, $\left[\dfrac{\Delta T_e'}{(T_e)_{en} - (T_a)_{en}}\right]$

η_a heating effectiveness of exchanger, $\left[\dfrac{\Delta T_a}{(T_e)_{en} - (T_a)_{en}}\right]$

σ density of cooling air relative to standard atmospheric density of 0.0765, (lb)/(cu ft)

ρ_e density of exhaust gas, (lb)/(cu ft)

ρ_{eo} density of exhaust gas at 1500° F, 29.92 inches of mercury and a fuel-air ratio of 0.08, [(0.0194 lb)/(cu ft)]

Subscripts:

a cooling air

e exhaust gas

en entrance

ex exit

RESULTS AND DISCUSSION

Thermal Performance

Figure 5 shows a plot of the heat dissipated by the exhaust gas against the heat absorbed by the cooling air. A value of 0.241 was used for the specific heat of the cooling-air and values ranging from 0.254 to 0.274 were used for the specific heat of the exhaust gas depending on the average temperature. The points in this figure were calculated from the relations

$$H_a = W_a c_{p_a} \left[(T_a)_{ex} - (T_a)_{en}\right]$$

and

$$H_e = W_e c_{p_e} \left[(T_e)_{en} - (T_e)_{ex} \right]$$

The specific heat of exhaust gas was assumed the same as that of air because of the extreme leanness of the exhaust-gas mixtures. An excess of heat absorbed by the cooling air over that dissipated by the exhaust gas at the higher heat flows is shown in the figure. The cause of this discrepancy is probably in the exhaust-gas stream, and for this reason the thermal performance has been evaluated from measurements on the cooling-air side.

In figure 6 is shown the heat output of the heat exchanger plotted against cooling-air flow for exhaust-gas flows of 3500, 5400, and 7200 pounds per hour and for an entrance-temperature difference of 1500° F. These values of heat output are the values of heat absorbed by the cooling air as computed from test data obtained at an exhaust-gas entrance temperature of about 1500° F corrected to an entrance-temperature difference of 1500° F. The correction was made by means of the following relation:

$$(H_a)_{1500} = (H_a)_{test} \times \frac{1500}{(T_e)_{en} - (T_a)_{en}}$$

The corresponding temperature rise of the cooling air is shown in figure 7. Examination of figures 6 and 7 indicates a cooling-air temperature rise of 405° F and a heat output of 293,000 Btu per hour for an exhaust-gas flow rate of 7200 pounds per hour (corresponding to engine operation at approximately 1000 hp) and for a cooling-air flow of 3000 pounds per hour. At the same cooling-air flow but with an exhaust-gas flow of 4000 pounds per hour the cooling-air temperature rise is 350° F and the heat output is 255,000 Btu per hour.

The cooling and heating effectiveness of the exchanger as a function of the fluid flows is shown in figure 8. The heating effectiveness is defined as

$$\eta_a = \frac{\Delta T_a}{(T_e)_{en} - (T_a)_{en}}$$

Because the temperature measurements on the cooling-air side are considered more reliable than those on the exhaust-gas side, the cooling effectiveness is defined as

$$\eta_e = \frac{\Delta T_e'}{(T_e)_{en} - (T_a)_{en}}$$

where

$$\Delta T_e' = \Delta T_a \times \frac{W_a(c_p)_a}{W_e(c_p)_e}$$

The expression for $\Delta T_e'$ is obtained from the heat-balance equation,

$$W_e(c_p)_e \ \Delta T_e' = W_a(c_p)_a \ \Delta T_a$$

Figure 8 is based on data for exhaust-entrance temperatures of 1500° F to 1550° F, but it should apply for entrance temperatures of 1500 ±200° F without serious error. The heat-transfer process is only slightly affected in this temperature range by the variation with temperature of the combination of physical properties of the fluids involved.

Pressure Drops

The correlation of cooling-air pressure-drop data is shown in figure 9. Because the pressure drop is not only a function of weight flow but also a function of density change, the experimental data are expressed in terms of $\sigma_{en}\Delta p_a/V_a^{1.92}$ and plotted against σ_{ex}/σ_{en}. The exponent 1.92 was derived from pressure-drop equations given in reference 7 and is validated by the lack of scatter shown in this correlation. The relationship thus established is replotted in figure 10 on logarithmic paper with the conventional coordinates and for various values of σ_{ex}/σ_{en} which, for the cooling air, are equal to or less than unity. The effect on pressure drop of the density change in the exchanger is seen to be quite appreciable.

Figures 11 and 12 pertain to the pressure drop of the exhaust gas across the exchanger and are analogous to figures 9 and 10, respectively. In this case the values of $(\rho_e)_{ex}/(\rho_e)_{en}$ are greater than unity for nonisothermal flow, because the density of the gas increases when it flows through the exchanger. Figure 11 shows a greater scatter of the test data than shown in figure 9.

for the cooling air; furthermore the exponent 2.1 of W_e, which was found to best fit the data, is greater than theory would indicate. No definite explanation can be offered for these conditions; however, during the tests it was noted that under some test conditions a whistling sound was produced by the flow of the exhaust gas across the exchanger tubes. This condition was attended by erratic behavior of the manometers that measured the pressure drop. Notwithstanding the foregoing considerations, it can be stated that the curves of figure 12 represent the test values of pressure drop within 0.5 inch of water.

Although the thermal and the pressure-drop performances shown in figures 6, 7, 8, 10, and 12 are given for the test exchanger with a no-flow length of 12.75 inches, the curves are, of course, applicable to any no-flow length of an otherwise identical exchanger if the heat output H_{test} and the fluid flows $(W_e)_{test}$ and $(W_a)_{test}$ are corrected according to the following relations:

$$H = H_{test} \times \frac{w}{12.75}$$

and

$$J = J_{test} \times \frac{w}{12.75}$$

where H and J correspond to any no-flow length w, in inches.

Illustration of the Use of Logarithmic Charts

In order to determine the cooling-air pressure drop across the exchanger from figure 10 when the thermal performance and the entrance temperature and pressure of the exchanger are known, it is necessary that the terms σ_{en} and σ_{ex}/σ_{en} be first evaluated. The value of σ_{en} is obtained from the known entrance temperature and pressure. The density ratio is obtained from the expression

$$\frac{\sigma_{ex}}{\sigma_{en}} = \frac{1 - \dfrac{\Delta p_a}{(p_a)_{en}}}{1 + \dfrac{\Delta T_a}{(T_a)_{en} + 460}} \qquad (1)$$

Since the value of Δp_a is being sought, it is assumed equal to zero and the equation is solved for a first approximation of σ_{ex}/σ_{en} which when applied to figure 10 together with the known value of cooling-air flow gives a value of $\sigma_{en}\Delta p_a$. This value of $\sigma_{en}\Delta p_a$ is divided by σ_{en} to obtain a first approximation of Δp_a, which is substituted in equation (1) for a second approximation of σ_{ex}/σ_{en}. In actual practice the effect of Δp_a on σ_{ex}/σ_{en} is small except at high altitudes. Ordinarily, therefore, this process of successive approximation is limited to one or two repetitions.

The use of figure 10 in determining the cooling-air pressure drop is illustrated by an example in which it is assumed that the following operating conditions are known:

1. Cooling-air flow, pounds per hour 3000
2. Exhaust-gas entrance temperature, °F 1500
3. Exhaust-gas flow, pounds per hour 4000
4. Cooling-air entrance pressure, inches Hg 15
5. Cooling-air entrance temperature, °F 45

The cooling-air pressure drop is determined as follows:

6. From items 4 and 5 and definition of σ

$$\sigma_{en} = \frac{15}{29.9} \times \frac{519}{505} = 0.516$$

7. From items 1 and 3 and figure 7:

$$\Delta T_a = 350^\circ \text{ F}$$

8. To obtain a first approximation for σ_{ex}/σ_{en}, Δp_a is assumed equal to zero. Then from items 5 and 7 and equation (1):

$$\frac{\sigma_{ex}}{\sigma_{en}} = \frac{1}{1 + \frac{350}{45 + 460}} = 0.590 \text{ (first trial)}$$

9. From items 1 and 8 and figure 10:

$$\sigma_{en}\Delta p_a = 4.2 \text{ inches of water}$$

10. From items 6 and 9:

$$\Delta p_a = \frac{4.2}{0.516} = 8.1 \text{ (first trial)}$$

11. A second approximation of σ_{ex}/σ_{en} can now be obtained from items 4, 5, 7, and 10 and equation (1).

$$\frac{\sigma_{ex}}{\sigma_{en}} = \frac{1 - \dfrac{8.1}{15 \times 13.6}}{1 + \dfrac{350}{45 + 460}} = \frac{0.960}{1.694} = 0.567 \text{ (second trial)}$$

12. From items 1 and 11 and figure 10:

$$\rho_{en}\Delta p_a = 4.3 \text{ inches of water}$$

13. From items 6 and 12:

$$\Delta p_a = \frac{4.3}{0.516} = 8.3 \text{ (second trial)}$$

It is obvious that further repetition is unnecessary.

The procedure to be followed in the use of figure 12 to obtain the exhaust-gas pressure drop is similar to that followed in obtaining the cooling-air pressure drop from figure 10. The exit-to-entrance density-ratio relationship for the exhaust-gas side of the exchanger differs from that for the cooling-air side and is expressed as follows:

$$\frac{(\rho_e)_{ex}}{(\rho_e)_{en}} = \frac{1 - \dfrac{\Delta p_e}{(p_e)_{en}}}{1 - \dfrac{\Delta T_e'}{(T_e)_{en} + 460}}$$

SUMMARY OF RESULTS

1. The thermal output of the NACA Type A exhaust-heat exchanger was 255,000 Btu per hour at a cooling-air flow of 3000 pounds per hour and an exhaust-gas flow of 4000 pounds per hour. The pressure drops, under these conditions, were 4.3 inches of water for the cooling air at sea-level density (0.0765 lb/ cu ft) and 2.5 inches of water for the exhaust gas at 1500° F and 29.92 inches of mercury.

2. After 90 hours of operation the heat exchanger, although constructed of low-carbon steel, showed no signs of failure from thermal stress imposed by exhaust temperatures up to 1500° F.

3. There were no indications after the tests that tubes of thinner walls could not have been used and the weight reduced from the present value of 25.5 pounds.

Aircraft Engine Research Laboratory,
National Advisory Committee for Aeronautics,
Cleveland, Ohio

REFERENCES

1. Martinelli, R. C., Weinberg, E. B., Morrin, E. H., and Boelter, L. M. K.: An Investigation of Aircraft Heaters. III - Measured and Predicted Performance of Double-Tube Heat Exchangers. NACA ARR, 1942.

2. Boelter, L. M. K., Miller, M. A., Sharp, W. H., Morrin, E. H., Iverson, H. W., and Mason, J. E.: An Investigation of Aircraft Heaters. IX - Measured and Predicted Performance of Two Exhaust Gas-Air Heat Exchangers and an Apparatus for Evaluating Exhaust Gas-Air Heat Exchangers. NACA ARR, 1943.

3. Boelter, L. M. K., Dennison, H. C., Guibert, A. G., and Morrin, E. H.: An Investigation of Aircraft Heaters. X - Measured and Predicted Performance of a Fluted-Type Exhaust Gas and Air Heat Exchanger. NACA ARR, 1943.

4. Boelter, L. M. K., Miller, M. A., Sharp, W. H., and Morrin, E. H.: An Investigation of Aircraft Heaters. XI - Measured and Predicted Performance of a Slotted-Fin Exhaust Gas and Air Heat Exchanger. NACA ARR No. 3D16, 1943.

5. Boelter, L. M. K., Dennison, H. G., Guibert, A. G., and Morrin, E. H.: An Investigation of Aircraft Heaters. XII - Performance of a Formed-Plate Cross-Flow Exhaust Gas and Air Heat Exchanger. NACA ARR No. 3E10, 1943.

6. Boelter, L. M. K., Guibert, A. G., Miller, M. A., and Morrin, E. H.: An Investigation of Aircraft Heaters. XIII - Performance of Corrugated and Noncorrugated Fluted Type Exhaust Gas-Air Heat Exchangers. NACA ARR No. 3H26, 1943.

7. Reuter, J. George, and Valerino, Michael F.: Design Charts for Cross-Flow Tubular Intercoolers - Charge-across-Tube Type. NACA ACR, Jan. 1941.

TABLE I

SUMMARY OF TEST DATA ON NACA TYPE A HEAT EXCHANGER

NATIONAL ADVISORY COMMITTEE FOR AERONAUTICS

Cooling-air flow rate, W_a (lb/hr)	Cooling-air temperature: At entrance, $(T_a)_{en}$ (°F)	Cooling-air temperature: At exit, $(T_a)_{ex}$ (°F)	Cooling-air temperature: Rise, ΔT_a (°F)	Heat added to cooling air, H_a (Btu/hr)	Exhaust-gas flow rate, W_e (lb/hr)	Exhaust-gas temperature: At entrance, $(T_e)_{en}$ (°F)	Exhaust-gas temperature: At exit, $(T_e)_{ex}$ (°F)	Exhaust-gas temperature: Drop, ΔT_e (°F)	Specific heat of exhaust gas, c_{p_e} (Btu)/(lb)(°F)	Heat rejected by exhaust gas, H_e (Btu/hr)	Heat-balance ratio, H_e/H_a (percent)	Heating effectiveness, η_a (percent)	Temperature change of exhaust gas, $\Delta T_e'$ (°F)	Cooling effectiveness, η_e (percent)	Cooling-air inlet pressure, $(p_a)_{en}$ (in. Hg absolute)	Cooling-air pressure drop, Δp_a (in. water)	Exhaust-gas inlet pressure, $(p_e)_{en}$ (in. Hg absolute)	Exhaust gas pressure drop, Δp_e (in. water)	Ratio of cooling-air exit and entrance densities, $\frac{\sigma_{ex}}{\sigma_{en}}$	Ratio of exhaust-gas exit and entrance densities, $\frac{(\rho_e)_{ex}}{(\rho_e)_{en}}$	Pressure drop of cooling air, $\sigma_{en} p_a$ (in. water)	Pressure drop of exhaust gas, $\frac{\rho_e}{\rho_{eo}}\Delta p_e$ (in. water)
3530	78	375	297	252,000	3620	1481	1261	220	0.272	217,000	86	0.212	256	0.183	29.46	5.8	29.38	2.8	0.651	1.120	5.5	2.8
3575	77	375	298	256,000	3685	1488	1270	218	.273	219,000	86	.211	255	.181	29.55	6.0	29.38	2.8	.631	1.121	5.7	2.8
3660	67	262	195	172,000	3680	1099	935	164	.262	158,000	92	.189	179	.173	29.82	5.4	29.47	1.8	.709	1.112	4.8	2.2
3660	67	263	196	173,000	3680	1099	931	168	.262	162,000	94	.190	180	.174	29.82	5.4	29.47	1.8	.709	1.117	4.8	2.2
3600	67	298	231	200,000	3600	1257	1067	180	.263	171,000	86	.194	211	.177	29.83	5.6	29.47	1.9	.683	1.117	5.0	2.2
3600	68	315	247	213,000	3600	1335	1142	193	.269	187,000	88	.195	220	.174	29.83	5.5	29.47	1.9	.670	1.069	4.9	2.2
5435	64	169	105	136,000	3495	820	669	151	.254	134,000	99	.139	153	.202	31.08	8.9	29.88	1.3	.816	1.131	9.2	2.0
5490	64	174	110	145,000	3495	858	697	161	.255	143,000	99	.138	163	.205	31.08	9.0	29.88	1.3	.810	1.139	9.2	2.0
5395	64	210	146	189,000	3480	1074	869	205	.261	186,000	98	.144	208	.206	30.68	9.7	29.58	1.5	.765	1.149	9.9	1.9
5405	63	213	150	195,000	3480	1091	900	191	.262	174,000	89	.146	214	.208	30.68	9.8	29.58	1.6	.757	1.135	10.0	2.1
5250	63	268	205	259,000	3345	1367	1119	248	.269	223,000	86	.157	288	.220	30.68	9.8	29.58	1.8	.701	1.149	10.0	2.1
5250	63	265	202	255,000	3450	1364	1108	256	.269	237,000	93	.155	275	.212	30.83	10.6	29.68	1.9	.702	1.154	10.8	1.9
5480	65	289	224	295,000	3495	1472	1203	269	.272	255,000	86	.159	310	.220	30.88	11.0	29.68	2.1	.679	1.157	11.2	2.2
5425	64	290	226	295,000	3485	1473	1204	269	.272	255,000	86	.160	311	.221	30.88	11.0	29.68	2.0	.681	1.157	11.2	2.1
7235	60	160	100	173,000	3435	928	743	185	.256	163,000	94	.116	197	.227	31.68	15.2	29.58	1.4	.810	1.153	16.0	1.9
7200	60	162	102	176,000	3435	962	763	199	.257	176,000	100	.113	199	.221	31.68	15.2	29.58	1.4	.806	1.161	16.0	1.9
7250	61	193	132	230,000	3345	1147	923	224	.263	197,000	86	.121	261	.241	31.83	16.0	29.58	1.5	.768	1.157	16.9	1.9
7210	62	196	134	232,000	3345	1184	946	238	.264	210,000	91	.119	263	.234	31.78	16.0	29.58	1.6	.766	1.166	16.9	1.9
7165	63	239	176	302,000	3425	1454	1167	287	.271	266,000	88	.127	325	.234	31.93	16.9	29.58	1.8	.717	1.175	17.9	1.9
7265	64	245	181	316,000	3390	1485	1195	290	.272	267,000	84	.127	343	.241	32.03	17.1	29.58	1.9	.712	1.165	18.1	1.9
7265	63	227	164	286,000	3425	1397	1108	289	.269	267,000	93	.123	310	.232	32.03	16.7	29.63	1.8	.730	1.182	17.7	1.9
7260	65	232	167	291,000	3505	1400	1131	269	.270	254,000	87	.125	308	.230	32.48	16.6	30.08	1.8	.729	1.157	17.8	2.0
9380	60	136	76	171,000	3490	881	702	179	.255	159,000	93	.092	192	.234	33.18	23.2	29.58	1.4	.835	1.152	25.6	2.0
9275	62	168	106	236,000	3390	1153	915	238	.263	212,000	90	.097	265	.243	33.28	24.1	29.58	1.5	.788	1.168	26.6	1.8
9250	63	171	108	240,000	3340	1172	932	240	.264	211,000	88	.097	272	.246	33.33	24.2	29.58	1.5	.786	1.170	26.7	1.8
9265	64	194	130	289,000	3335	1358	1073	285	.268	255,000	88	.100	323	.250	33.53	25.2	29.58	1.7	.754	1.178	28.0	1.9
9255	64	197	133	296,000	3335	1384	1086	298	.269	267,000	90	.101	330	.250	33.53	25.2	29.58	1.7	.755	1.193	28.0	1.8
9350	64	220	156	350,000	3390	1534	1211	323	.273	299,000	85	.107	378	.257	33.68	25.7	29.58	1.9	.727	1.197	28.6	1.8
9200	65	222	157	347,000	3335	1537	1221	316	.273	287,000	83	.107	381	.259	33.63	25.9	29.63	1.9	.727	1.182	28.8	1.8
3410	67	262	195	160,000	5345	934	813	121	.258	166,000	104	.225	116	.134	29.58	4.5	30.08	3.3	.721	1.083	4.4	4.8
3405	67	266	199	163,000	5345	947	834	113	.258	156,000	96	.226	118	.134	29.53	4.6	30.08	3.3	.720	1.075	4.5	4.7
3410	69	328	259	212,000	5405	1202	1056	146	.266	210,000	99	.228	147	.130	29.63	5.0	30.38	4.0	.663	1.088	4.9	4.9
3410	68	329	261	214,000	5395	1195	1064	131	.266	188,000	88	.231	150	.133	29.63	5.0	30.38	4.0	.663	1.077	4.9	4.9
3415	70	381	311	255,000	5415	1405	1256	149	.271	219,000	86	.233	175	.131	29.68	5.3	30.48	4.3	.622	1.075	5.2	4.7
3580	72	389	317	273,000	5355	1489	1328	161	.274	236,000	86	.224	187	.132	29.56	6.2	30.38	4.5	.614	1.080	6.0	4.7
3595	72	389	317	274,000	5315	1493	1329	164	.274	238,000	87	.223	189	.133	29.54	6.2	30.28	4.5	.614	1.073	6.0	4.7
5505	70	311	241	319,000	5415	1411	1224	187	.271	274,000	86	.160	218	.163	30.93	12.0	30.48	4.2	.668	1.100	12.2	4.6
5505	70	309	239	316,000	5405	1412	1224	188	.271	275,000	87	.178	216	.161	30.93	12.0	30.48	4.2	.668	1.100	12.2	4.6
5500	69	272	203	268,000	5385	1233	1064	169	.266	242,000	90	.174	187	.160	30.83	11.4	30.38	3.8	.704	1.100	11.5	4.6
5495	67	229	162	214,000	5395	1010	877	133	.260	186,000	87	.172	153	.162	30.68	10.7	30.18	3.3	.748	1.090	10.8	4.5
5495	67	228	161	213,000	5395	1014	874	140	.260	196,000	92	.170	152	.160	30.73	10.8	30.18	3.3	.748	1.100	10.9	4.5
5290	72	327	255	324,000	5300	1486	1294	192	.273	278,000	86	.161	224	.158	30.56	12.0	30.28	4.4	.655	1.098	11.9	4.6
5295	72	327	255	324,000	5335	1493	1297	196	.273	285,000	88	.180	223	.156	30.56	11.8	30.28	4.4	.655	1.098	11.8	4.5
5280	70	326	256	325,000	5340	1493	1296	197	.273	287,000	88	.180	223	.156	30.57	11.9	30.28	4.4	.653	1.098	11.9	4.6
7375	67	170	103	182,000	5385	836	705	131	.254	179,000	98	.134	133	.173	31.79	16.2	29.99	3.0	.805	1.107	16.9	4.7
7310	64	169	105	184,000	5385	843	722	121	.255	166,000	90	.135	134	.173	31.79	16.0	30.09	3.0	.802	1.094	16.8	4.7
7450	62	203	141	252,000	5480	1073	908	165	.262	236,000	94	.139	175	.173	31.94	16.9	30.29	3.4	.759	1.116	17.9	4.5
7310	62	205	143	250,000	5445	1093	925	168	.262	240,000	96	.139	175	.171	31.94	17.0	30.29	3.5	.755	1.117	18.0	4.6
7415	61	241	180	320,000	5485	1304	1106	198	.268	291,000	91	.145	217	.174	32.09	18.0	30.49	3.9	.715	1.116	19.2	4.5
7345	61	241	180	317,000	5485	1317	1103	214	.268	314,000	99	.143	215	.172	32.09	18.0	30.49	3.9	.715	1.123	19.2	4.4
7415	61	282	221	393,000	5405	1544	1315	229	.274	339,000	86	.149	265	.179	32.29	18.8	30.69	4.3	.674	1.112	20.3	4.4
9470	56	211	155	352,000	5425	1328	1120	208	.269	304,000	86	.122	240	.188	33.79	26.1	30.69	4.2	.727	1.117	29.6	4.8
9470	56	209	153	348,000	5460	1312	1110	202	.268	296,000	85	.122	239	.190	33.79	26.4	30.69	4.2	.729	1.122	30.0	4.9
9470	54	145	91	206,000	5530	865	731	134	.255	189,000	92	.112	151	.185	33.29	23.5	30.39	3.4	.797	1.107	26.4	5.2
9470	54	144	90	204,000	5475	846	718	128	.255	178,000	87	.113	149	.189	33.29	23.5	30.39	3.3	.800	1.105	25.4	5.1
9510	55	161	106	242,000	6885	918	795	123	.257	218,000	90	.123	137	.158	33.44	23.8	31.19	4.6	.787	1.083	27.1	7.0
9380	56	163	107	241,000	6885	920	794	127	.257	225,000	93	.124	136	.158	33.39	23.6	31.19	4.6	.787	1.092	26.9	7.0
9380	57	188	131	295,000	6940	1093	949	144	.262	262,000	89	.126	162	.157	33.59	24.8	31.49	5.2	.756	1.090	28.3	6.8
9225	67	194	127	281,000	6825	1059	911	148	.262	264,000	94	.128	158	.159	32.97	24.4	31.02	5.4	.762	1.093	26.8	7.4
9290	68	230	162	362,000	6910	1263	1083	180	.267	332,000	92	.135	196	.164	33.22	26.0	31.32	6.7	.722	1.100	28.8	8.1

TABLE I - Concluded

SUMMARY OF TEST DATA ON NACA TYPE A HEAT EXCHANGER - Concluded

NATIONAL ADVISORY COMMITTEE FOR AERONAUTICS

Cooling-air flow rate, W_a (lb/hr)	Cooling-air temperature: At entrance, $(T_a)_{en}$ (°F)	Cooling-air temperature: At exit, $(T_a)_{ex}$ (°F)	Cooling-air temperature: Rise, ΔT_a (°F)	Heat added to cooling air, H_a (Btu/hr)	Exhaust-gas flow rate, W_e (lb/hr)	Exhaust-gas temperature: At entrance, $(T_e)_{en}$ (°F)	Exhaust-gas temperature: At exit, $(T_e)_{ex}$ (°F)	Exhaust-gas temperature: Drop, ΔT_e (°F)	Specific heat of exhaust gas, c_{p_e} (Btu)/(lb)(°F)	Heat rejected by exhaust gas, H_e (Btu/hr)	Heat-balance ratio, H_e/H_a (percent)	Heating effectiveness, λ_a (percent)	Temperature change of exhaust gas, $\Delta T_e'$ (°F)	Cooling effectiveness, η_e' (percent)	Cooling-air inlet pressure, $(p_a)_{en}$ (in. Hg absolute)	Cooling-air pressure drop, Δp_a (in. water)	Exhaust-gas inlet pressure, $(p_e)_{en}$ (in. Hg absolute)	Exhaust gas pressure drop, Δp_e (in. water)	Ratio of cooling-air exit and entrance densities, $\frac{\sigma_{ex}}{\sigma_{en}}$	Ratio of exhaust-gas exit and entrance densities, $\frac{(\rho_e)_{ex}}{(\rho_e)_{en}}$	Pressure drop of cooling air, $\sigma_{en}\Delta p_a$ (in. water)	Pressure drop of exhaust gas, $\frac{\rho_e}{\rho_{ep}}\Delta p_e$ (in. water)
9275	69	231	162	361,000	6900	1267	1093	174	0.267	321,000	89	0.135	196	0.164	33.22	25.9	31.32	6.8	0.723	1.094	28.7	8.2
9260	71	277	206	458,000	6940	1495	1288	207	.273	392,000	86	.145	242	.170	33.52	27.5	31.72	9.1	.679	1.094	30.5	9.8
9260	72	276	204	454,000	6915	1492	1289	203	.273	384,000	85	.144	241	.169	33.52	27.5	31.72	9.1	.679	1.094	30.5	9.8
7425	75	212	137	245,000	7230	992	865	127	.259	238,000	97	.150	131	.143	32.63	16.9	32.03	5.2	.777	1.081	18.4	7.7
7465	74	212	138	246,000	7255	993	865	128	.259	241,000	97	.151	132	.144	32.68	16.9	32.03	5.2	.737	1.086	18.4	7.7
7490	76	264	188	338,000	7260	1280	1114	166	.268	323,000	96	.157	174	.144	32.93	18.4	32.43	6.4	.734	1.086	20.2	8.0
7450	71	263	192	344,000	7340	1283	1116	167	.268	329,000	96	.159	175	.144	32.38	18.5	31.93	6.4	.691	1.088	19.9	7.8
7315	66	300	234	411,000	7220	1479	1285	194	.273	383,000	93	.165	209	.148	32.30	18.8	32.00	8.5	.663	1.086	20.3	9.4
7270	66	306	240	418,000	7165	1492	1305	187	.273	366,000	88	.168	214	.151	32.35	19.1	32.10	8.6	.657	1.087	20.6	9.4
5440	73	355	282	369,000	7305	1492	1312	180	.273	359,000	97	.198	185	.130	31.00	12.2	32.20	9.5	.635	1.074	12.5	10.5
5440	74	359	285	373,000	7305	1494	1326	168	.274	336,000	90	.200	187	.132	31.00	12.2	32.20	9.9	.632	1.062	12.5	11.9
3715	68	410	342	305,000	7370	1474	1344	130	.274	262,000	86	.243	151	.107	30.05	6.4	32.40	10.4	.598	1.050	6.4	11.6
3715	68	411	343	306,000	7335	1472	1344	128	.274	257,000	84	.244	152	.107	30.05	6.4	32.40	10.4	.598	1.044	6.4	11.7
7265	67	278	211	369,000	5275	1477	1254	223	.273	321,000	87	.147	251	.178	32.25	18.3	30.70	4.2	.688	1.121	19.6	4.4
7350	66	276	210	370,000	5290	1474	1257	217	.273	313,000	85	.148	254	.181	32.25	18.1	30.70	4.2	.687	1.115	19.5	4.4
3629	72	362	290	252,000	7360	1269	1150	119	.268	234,000	93	.242	128	.107	29.51	5.9	31.48	7.8	.636	1.051	5.7	9.5
3575	70	366	296	254,000	7350	1288	1172	116	.269	229,000	90	.243	129	.106	29.52	6.1	31.48	7.7	.630	1.052	5.9	9.2
5400	70	306	236	306,000	7250	1293	1154	139	.268	270,000	88	.193	157	.128	30.58	11.8	31.48	7.5	.667	1.068	11.8	9.0
5400	69	304	235	305,000	7260	1287	1146	141	.268	274,000	90	.193	157	.128	30.58	11.9	31.43	7.4	.671	1.068	11.8	8.9
5395	69	260	191	247,000	7275	1097	973	124	.263	237,000	96	.186	129	.126	30.48	11.0	31.08	5.7	.713	1.071	11.0	7.6
5405	68	256	188	244,000	7205	1079	963	116	.262	218,000	89	.186	129	.128	30.47	11.0	30.98	5.6	.715	1.065	11.0	7.6
3390	65	267	202	165,000	5255	972	849	123	.259	167,000	101	.222	121	.133	29.09	4.6	29.64	3.3	.713	1.069	4.4	4.6
3390	64	282	218	177,000	5265	1033	908	125	.261	172,000	97	.225	129	.133	29.04	4.7	29.64	3.5	.699	1.081	4.5	4.7
5420	63	231	168	219,000	5315	1046	897	149	.261	206,000	94	.171	158	.161	30.00	10.4	29.74	3.5	.737	1.096	10.3	4.6
5420	62	225	163	212,000	5345	1014	859	155	.260	215,000	101	.171	153	.160	30.00	10.3	29.64	3.4	.743	1.104	10.2	4.6
5410	62	223	161	209,000	5340	1013	863	150	.260	208,000	99	.169	151	.158	30.54	10.3	29.64	3.3	.745	1.104	10.4	4.5
7150	69	199	130	224,000	5345	1021	848	173	.259	240,000	107	.136	162	.170	31.42	16.2	29.92	3.4	.771	1.128	16.6	4.6
7240	64	193	129	223,000	5280	1024	862	162	.260	222,000	100	.134	163	.169	31.47	16.8	29.92	3.3	.683	1.114	19.7	4.5
9450	61	169	108	245,000	5335	1030	860	170	.260	236,000	96	.111	177	.183	33.02	25.0	29.92	3.2	.792	1.124	27.4	4.2
9540	58	169	111	254,000	5370	1053	878	175	.261	245,000	96	.111	182	.183	33.02	24.5	29.72	3.3	.779	1.121	27.6	4.3
7210	59	206	147	255,000	7320	1037	898	139	.261	266,000	104	.150	134	.136	31.47	16.6	30.92	5.3	.749	1.087	17.4	7.3
7360	58	203	145	257,000	7250	1024	892	132	.260	249,000	97	.150	136	.141	31.57	17.0	30.92	5.3	.750	1.087	17.9	7.4
4950	59	242	183	218,000	7250	1037	915	122	.261	231,000	106	.187	115	.118	30.12	9.4	30.92	5.3	.722	1.073	9.4	7.3
5100	59	242	183	224,000	7330	1030	910	120	.261	230,000	103	.189	119	.122	30.22	9.5	31.72	5.6	.723	1.070	9.6	7.9
3650	60	283	223	195,000	7275	1034	930	104	.261	198,000	102	.229	103	.105	29.52	5.5	31.72	5.6	.690	1.062	5.1	8.0
3480	61	251	190	159,000	3505	1020	852	168	.259	153,000	96	.198	175	.183	29.32	4.7	29.12	1.5	.723	1.126	4.6	2.0
3480	60	252	192	161,000	3505	1043	873	170	.260	155,000	96	.195	177	.180	29.32	4.7	29.12	1.6	.722	1.123	4.6	2.1
5270	59	205	146	185,000	3505	1048	857	191	.260	174,000	94	.148	203	.205	30.22	9.5	29.12	1.6	.763	1.144	9.6	2.1
5280	58	204	146	185,000	3505	1049	851	198	.260	181,000	98	.147	203	.205	30.22	9.4	29.12	1.6	.763	1.149	9.5	2.1
7220	56	169	113	196,000	3510	1033	826	207	.259	188,000	96	.116	216	.221	31.37	15.6	29.12	1.5	.790	1.158	16.4	2.0
7220	55	173	118	204,000	3455	1064	856	208	.260	187,000	92	.117	227	.225	31.32	15.5	29.12	1.5	.785	1.156	16.3	1.9
9630	54	146	92	213,000	3460	1059	842	217	.260	195,000	91	.092	239	.238	33.02	24.5	29.12	1.5	.802	1.160	27.2	1.9
9550	54	144	90	206,000	3445	1056	830	226	.260	203,000	98	.090	233	.232	33.02	23.9	29.12	1.5	.807	1.176	26.5	1.9
9200	72	212	140	310,000	9365	1023	888	135	.260	329,000	106	.148	127	.134	33.12	25.3	32.67	12.4	.746	1.068	27.3	18.3
9240	70	212	142	315,000	9365	1025	896	129	.261	314,000	100	.149	129	.135	33.17	25.1	32.77	12.7	.744	1.060	27.2	18.8
7040	70	238	168	284,000	9460	1017	899	118	.260	291,000	103	.178	116	.123	31.52	16.5	32.77	13.1	.788	1.054	17.0	19.4
7070	71	239	168	286,000	9450	1028	898	130	.261	320,000	112	.176	117	.123	31.52	16.5	32.97	13.1	.731	1.063	17.0	19.3
5270	71	276	205	260,000	9470	1038	933	105	.261	260,000	100	.212	105	.109	30.37	10.4	32.97	13.6	.703	1.042	10.3	20.0
5210	71	276	205	257,000	9470	1040	935	105	.261	260,000	101	.212	104	.107	30.37	10.4	32.97	13.7	.703	1.041	10.3	20.1
3940	72	312	240	226,000	9545	1032	950	82	.261	205,000	91	.250	91	.095	29.67	6.5	33.07	14.0	.677	1.023	6.3	20.8
3940	73	312	239	227,000	9560	1035	936	99	.261	247,000	109	.248	91	.095	29.67	6.4	33.07	14.2	.679	1.037	6.2	20.9

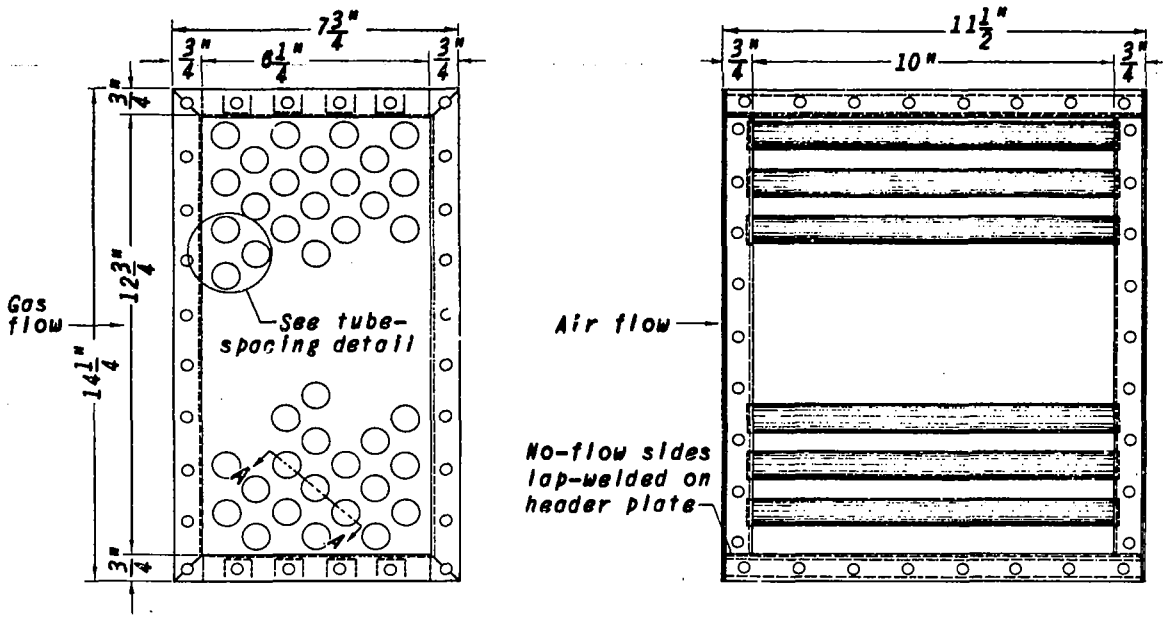

(a) Cooling-air face.

(b) Exhaust-gas face.

NATIONAL ADVISORY
COMMITTEE FOR AERONAUTICS

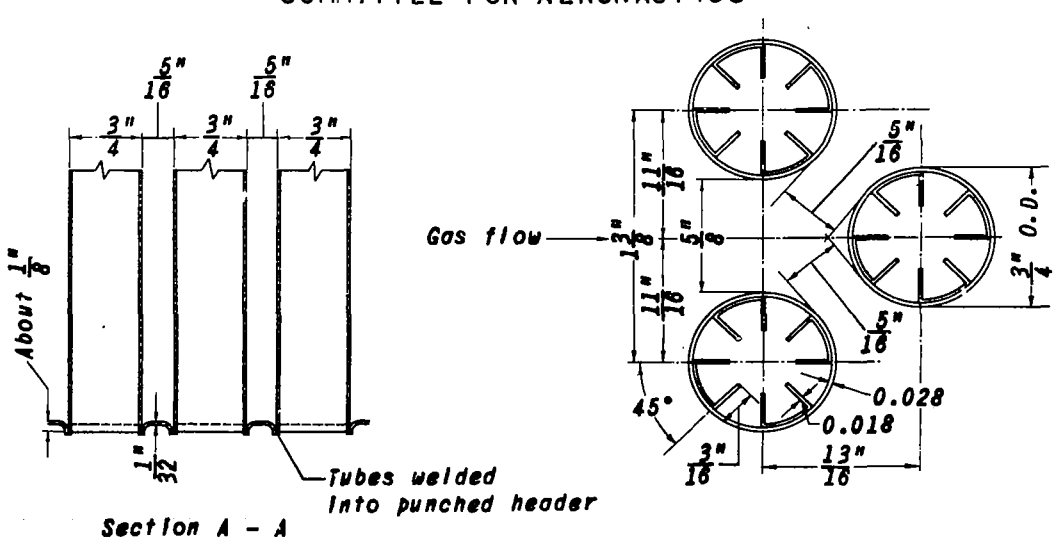

(c) Header-plate detail.

(d) Tube-spacing and finned-tube detail.

Figure 1. - Sketch of NACA type A heat-exchanger details.

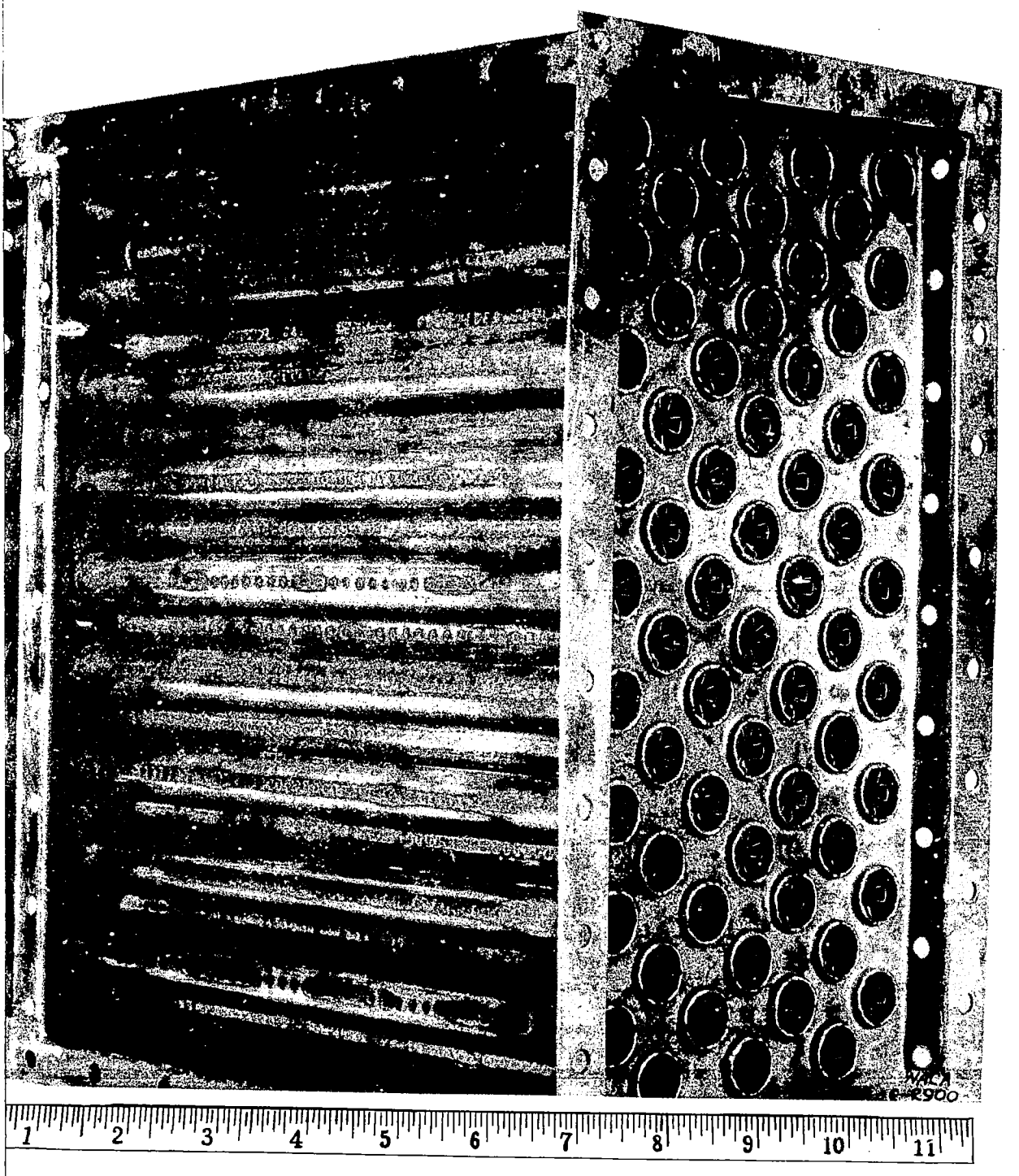

Figure 2. - The NACA type A internally finned tubular exhaust-heat exchanger.

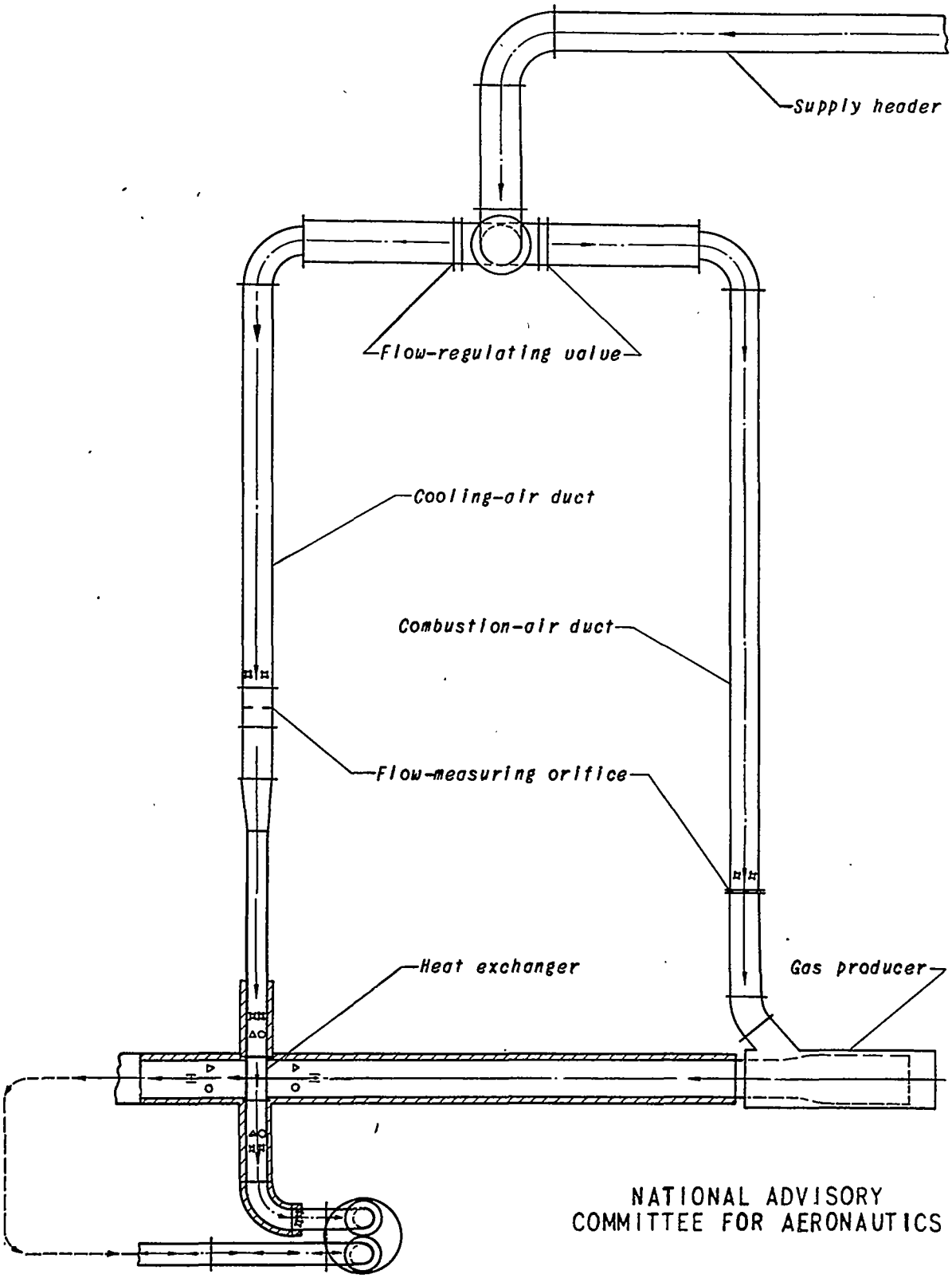

Figure 3. - Diagram of test equipment.

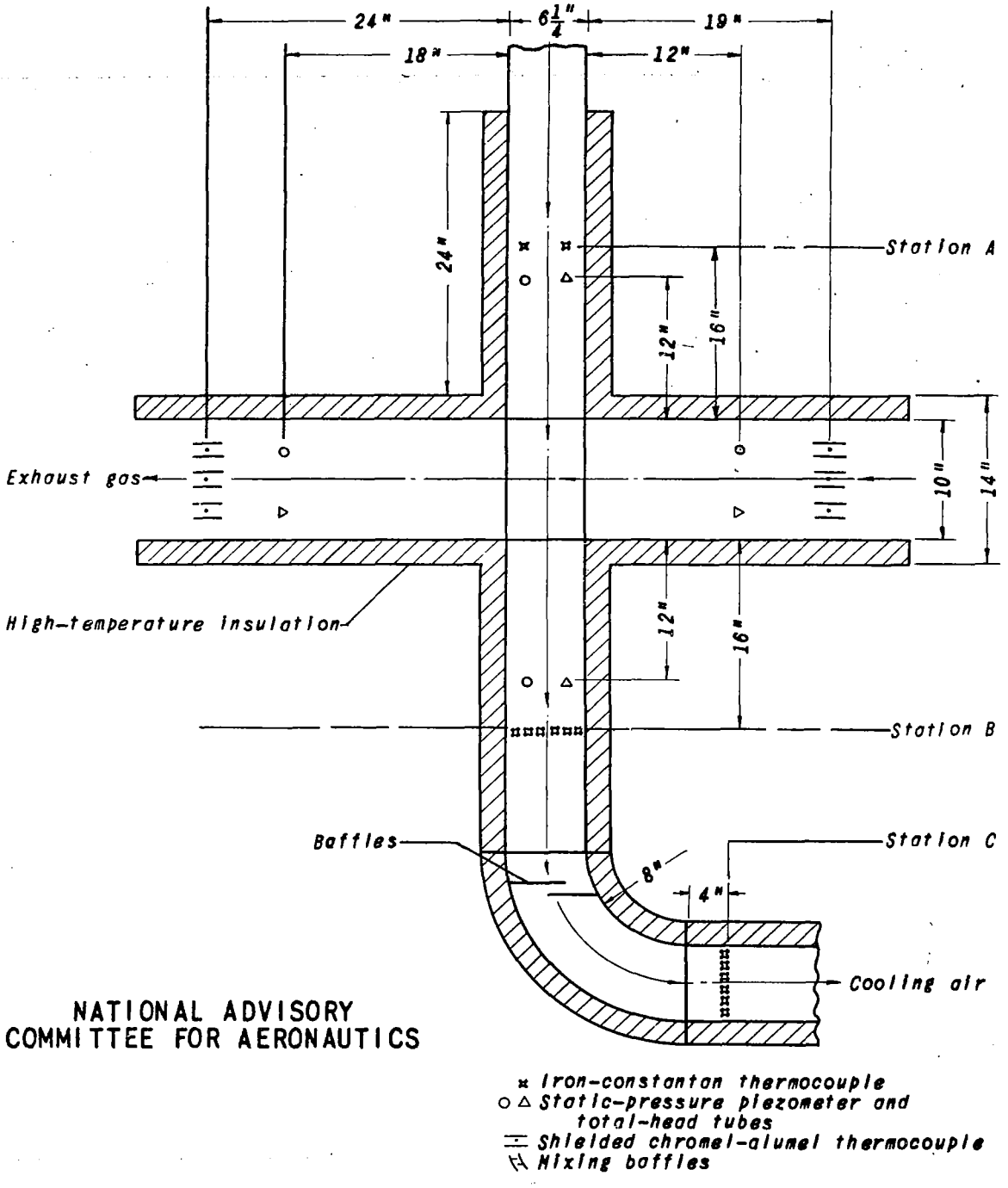

Figure 4. - Diagrammatic sketch showing positions of thermocouples, pressure taps, and baffle plates in heat-exchanger duct.

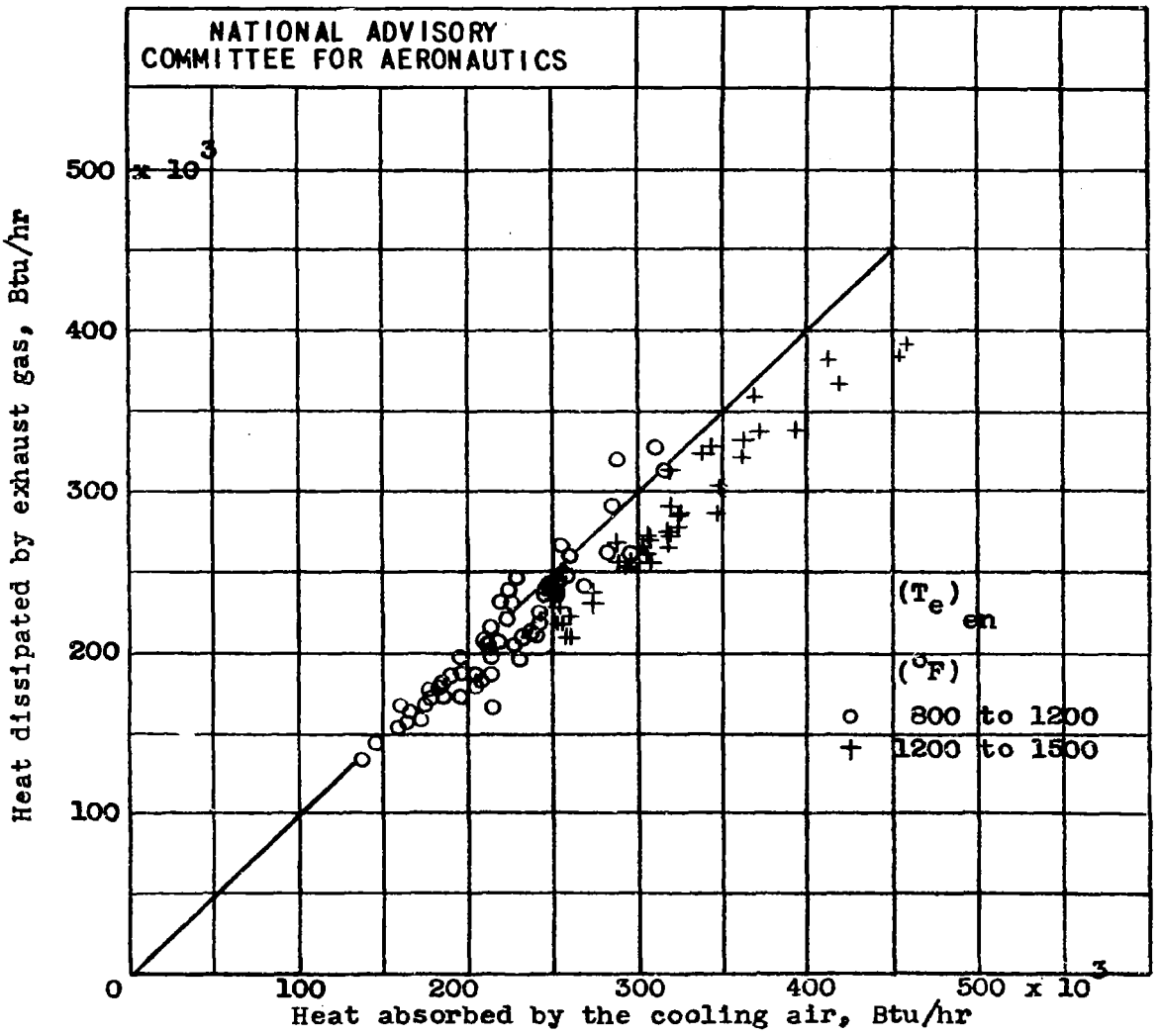

Figure 5.- Heat balance of cooling air and exhaust gas.

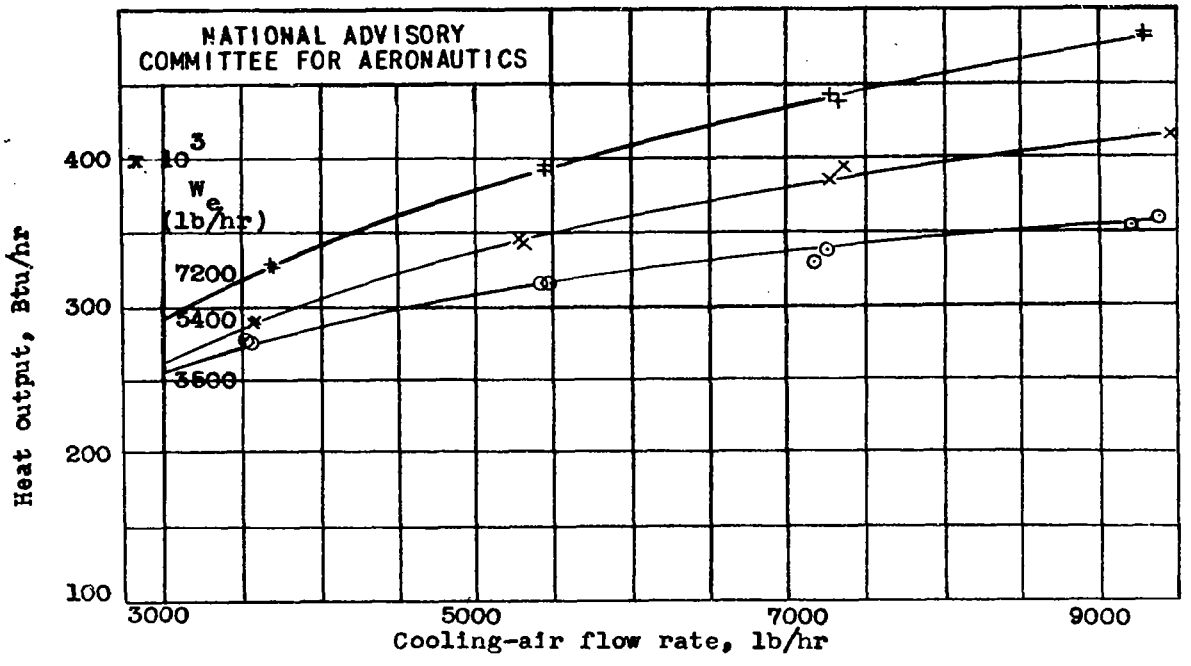

Figure 6.- Heat output of the NACA type A heat exchanger. Entrance-temperature difference, 1500° F.

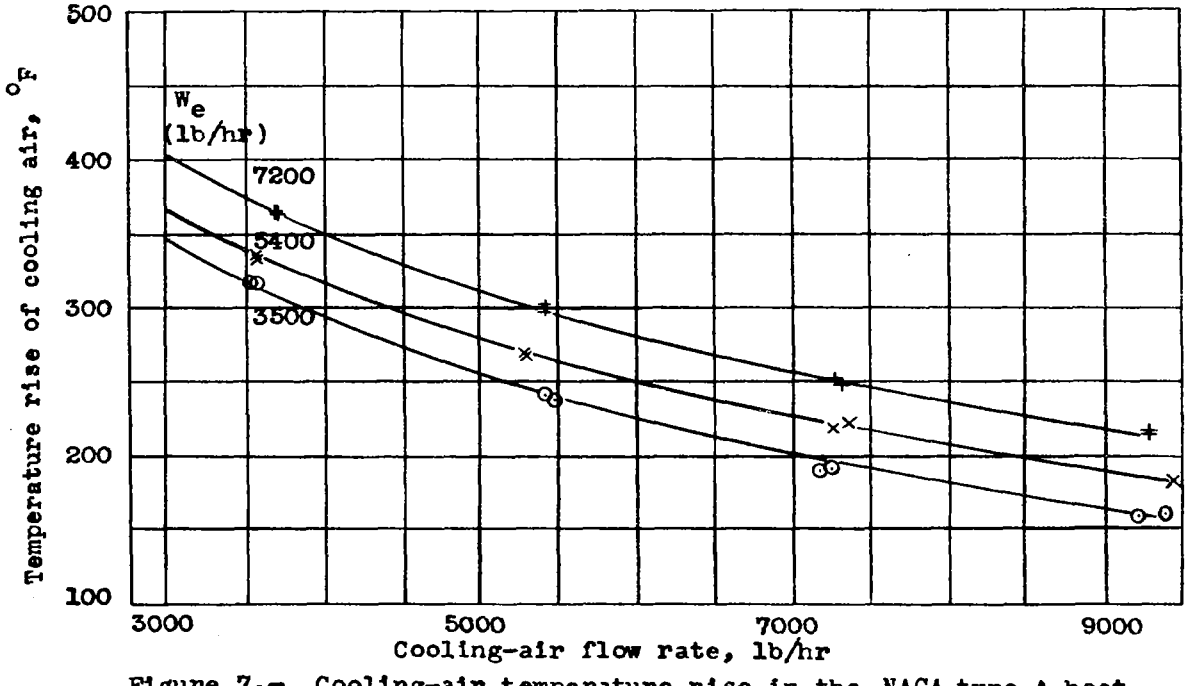

Figure 7.- Cooling-air temperature rise in the NACA type A heat exchanger. Entrance-temperature difference, 1500° F.

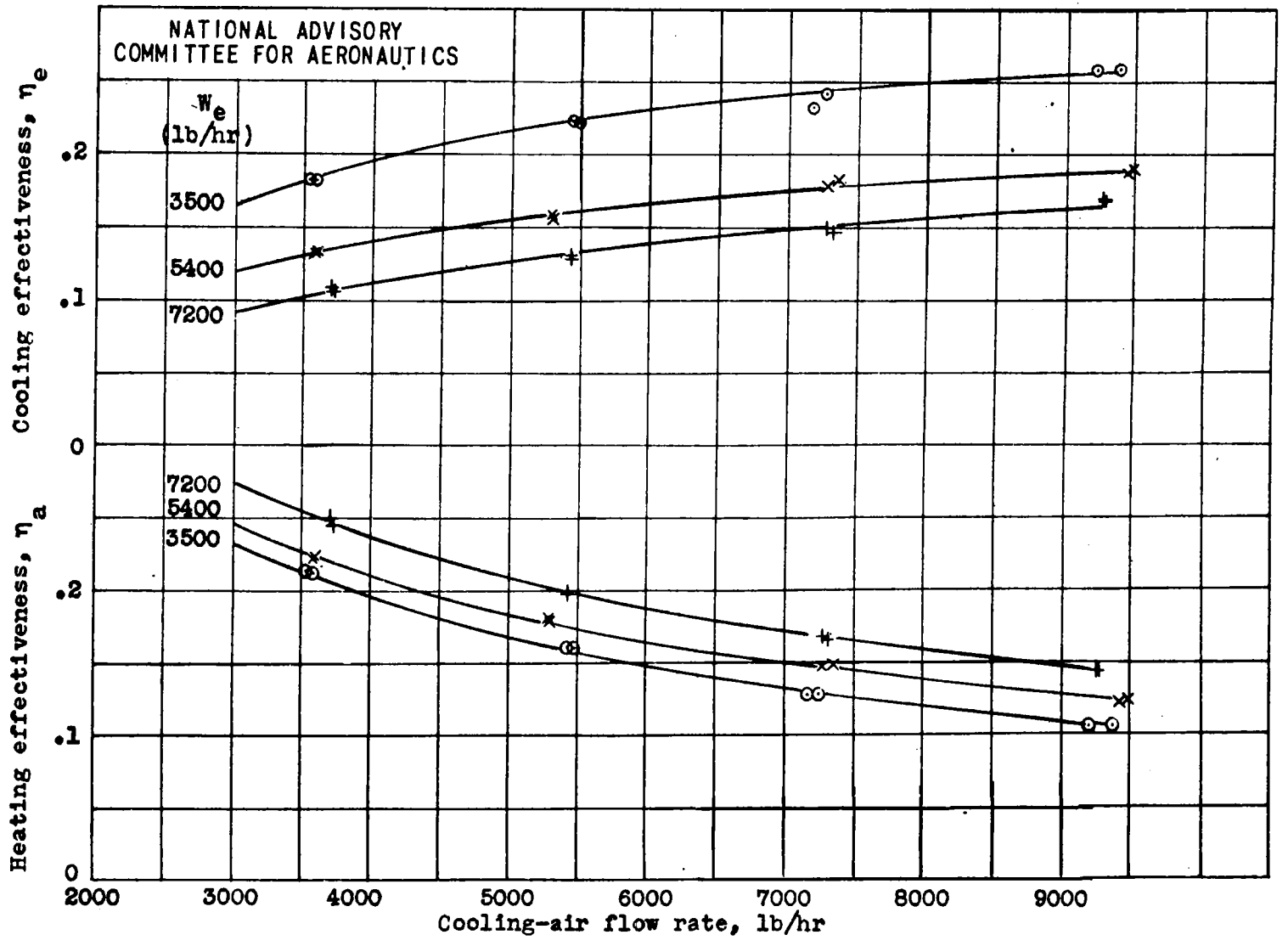

Figure 8.- Cooling and heating effectiveness of the NACA type A heat exchanger.

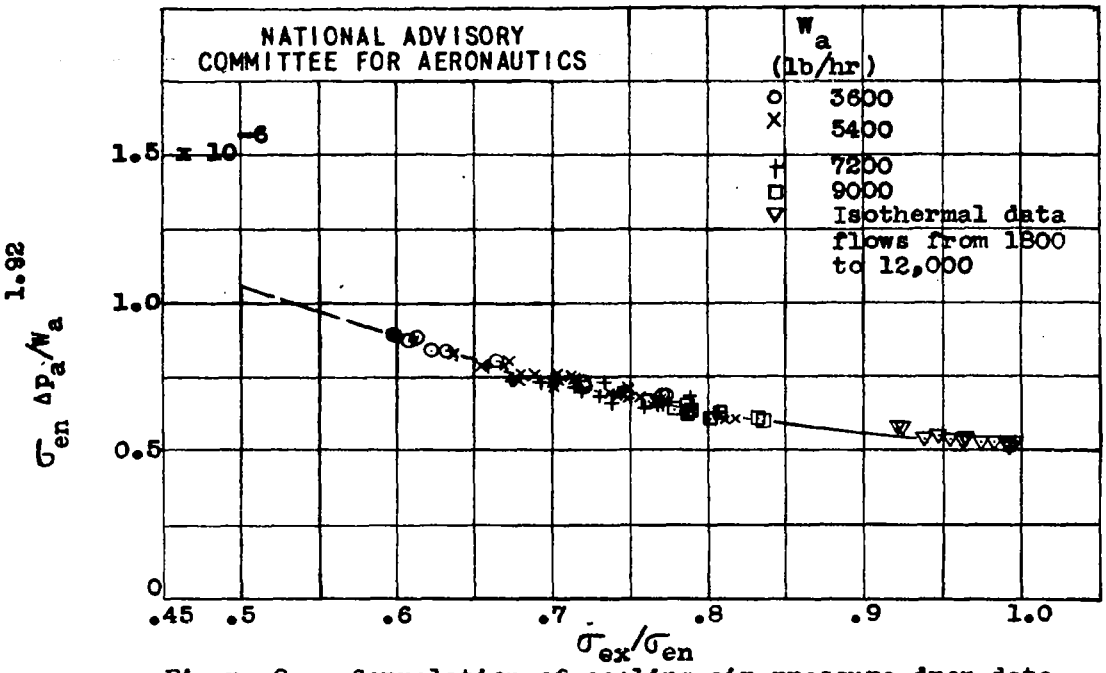

Figure 9.- Correlation of cooling-air pressure-drop data.

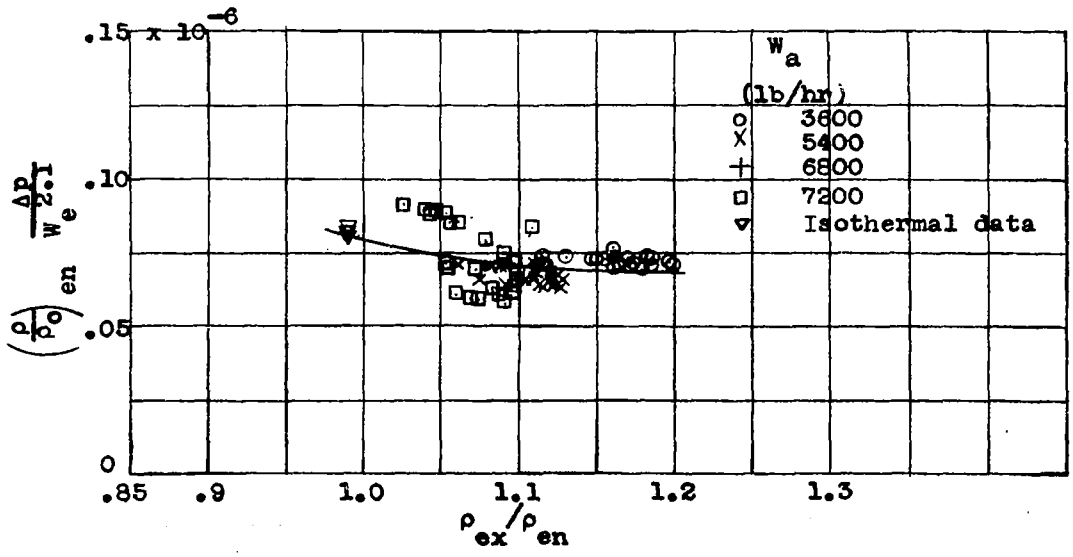

Figure 11.- Correlation of exhaust-gas pressure drop data.

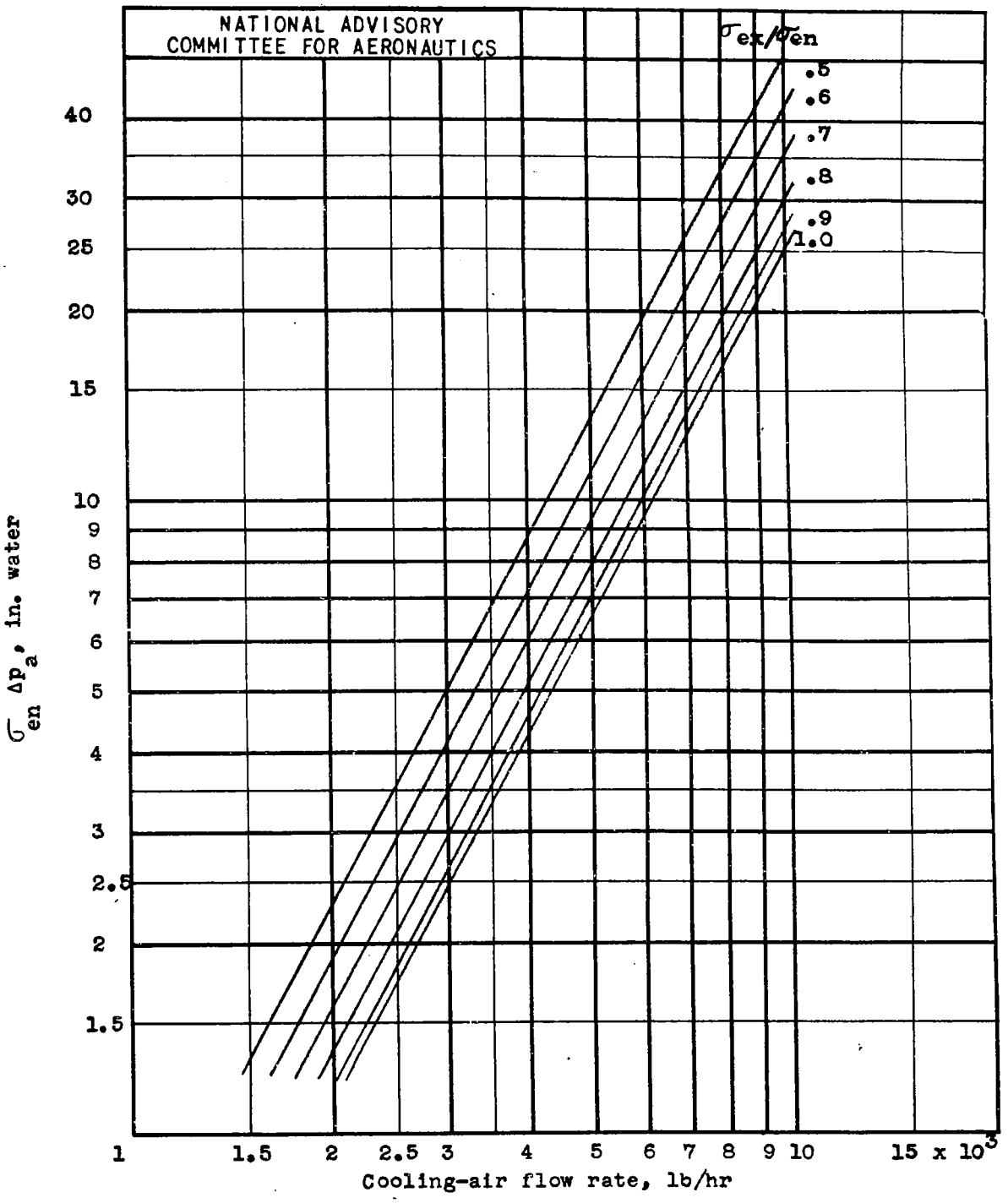

Figure 10.- Pressure drop of cooling air across the NACA type A internally finned tubular heat exchanger.

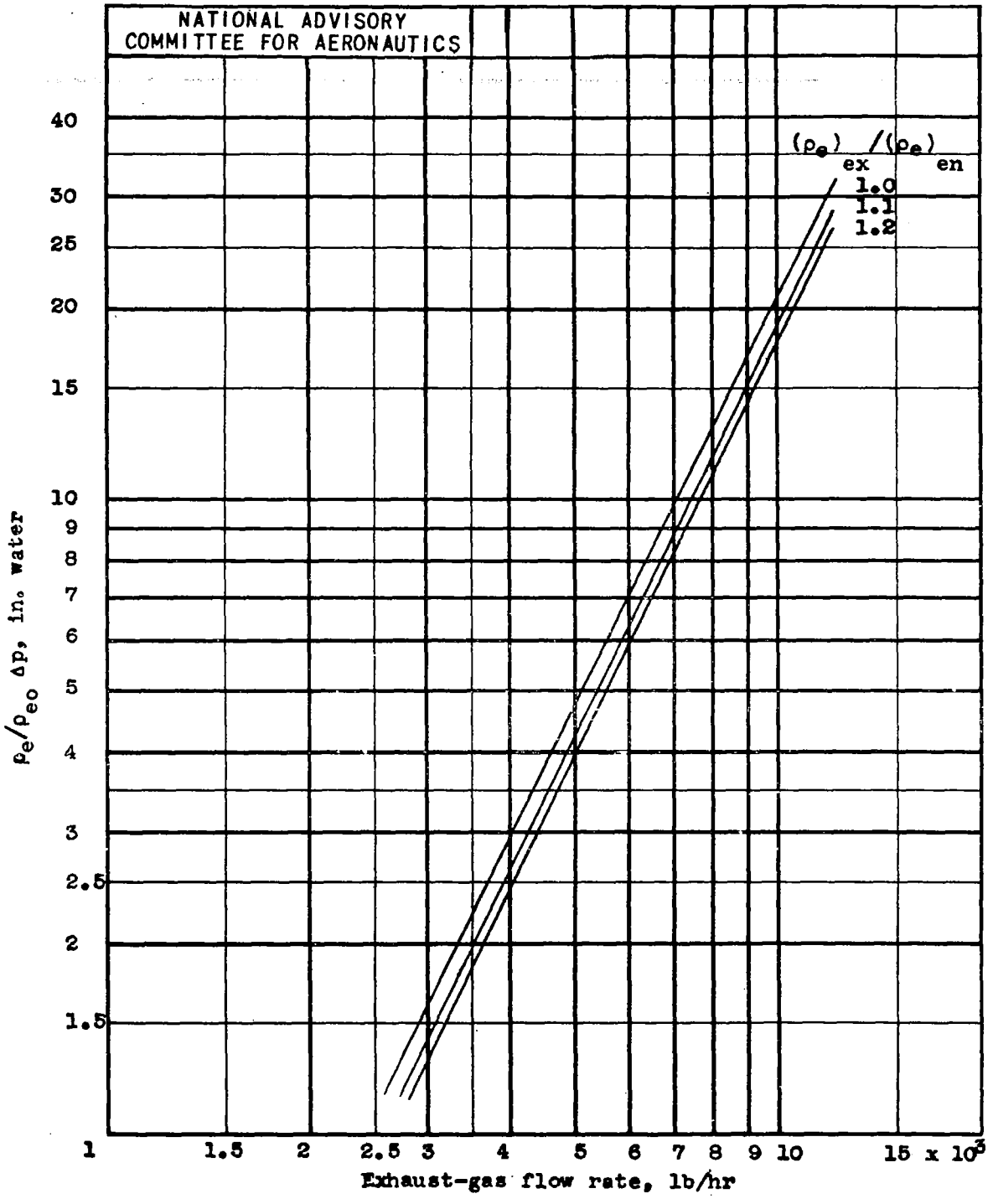

Figure 12.- Exhaust-gas pressure drop across the NACA type A internally finned tubular heat exchanger.

LANGLEY RESEARCH CENTER
3 1176 01364 7822