REPORT No. 10.

MUFFLERS FOR AERONAUTIC ENGINES.

By PROF. H. DIEDERICHS and PROF. G. B. UPTON,
Of Cornell University.

REPORT No. 10.

MUFFLERS FOR AERONAUTIC ENGINES.

By Prof. H. Diederichs and Prof. G. B. Upton,
Of Cornell University.

I. THE PROBLEM.

The necessity for muffling the exhaust of airplane engines is hardly open to argument. The objects in view are the minimizing of noise to delay detection in military service, to protect the general public, particularly those living near aviation fields, and lastly to give the operator a better chance to know what the rest of his power plant is doing. The last point is perhaps even now of little importance, as an exhaust pipe long enough to end behind the operator is quite enough to make the exhaust noise less prominent than some other rackets.

A study of the general problem of silencing the airplane power plant, not only in the laboratory but also by means of observing airplanes in a large number of flights, has led to certain conclusions, none of which are, however, new. In the first place the exhaust noise is not the only disturbance to be dealt with, although perhaps the most important, because the staccato barks of open exhaust carry to greater distances than the other attendant noises. It is, however, not a matter of great difficulty to so far suppress these barks that the exhaust noise ceases to be the most prominent in relation to some others. As a matter of fact, a simple pipe of sufficient length will do this for the high-speed multicylinder engines, and we understand that some American and German planes are using this scheme. It serves at least to protect the operator, even if it does not go a great way toward actually suppressing the pulsations as far as an observer at a distance is concerned. The very fact that the impulses follow so rapidly upon one another seems to make the problem of taking off the "bark" easier, for we found it much harder to muffle single-cylinder slow-speed engines.

Assuming, however, that a successful device for completely muffling the exhaust can be found, we should still have to deal with other noises, such as the hum of the propeller, the singing of gears, and the rattle of the valve gear. It will be admitted that all of these sources of noise can be minimized, but elimination does not seem to be in the realm of possibility.

On the 8-cylinder engine used for our last experiments the propeller of the fan brake caused a deep, more or less musical note, which appeared to come from the crank case. This noise disappeared when the blades were removed from the fan arm, and the engine was operated at speed under its own power, swinging only

the arm. The same sort of humming note can be identified in connection with planes in flight at considerable altitudes and distances. To silence this disturbance presents a problem on which at present the writers have no suggestions, except that slower speed (geared) propellers might help.

Another source of noise is in the valve gear. In the case of the engine under test this consisted in a sort of rattling hiss at high speeds. It can be easily identified when the observer is close by. In planes of flight at some distance from the observers the noise would appear to be drowned in the exhaust roar and in the hum of the propeller. In any case this disturbance can be minimized by accurate adjustment. But it is difficult to see how the valve slap can be entirely eliminated.

The last source of noise is in the gears. This can be partly suppressed at least by the use of spiral gearing and by accurate machine work and mounting.

These four sources of noise are the principal ones requiring attention. We would place them in order of importance: (*a*) Exhaust noise, (*b*) propeller noise, (*c*) valve-gear noise, (*d*) gear noise. We believe that it is most important to suppress the exhaust noise, because its staccato barks will undoubtedly advertise the rising of a plane sooner than the other three by reason of its greater carrying power. But the problem of the other noises remains; and we are further of the opinion, based on our experience in the past year, that the exhaust noise can be so far suppressed with comparatively simple means that it forms the smallest source of the disturbance of the four. We will not venture to predict complete suppression. Any muffler construction in connection with its manifold will have to take in some one of its parts the full force of the original blow, and since lightness of construction is one of the requirements calling for thin walls the chances are that there will always be more or less of a pulsating roar, at least near the engine. We have so far not reached the stage of considering this part of the problem.

Confining our attention now to the particular problem in hand, the silencing of the exhaust, a successful device will have to meet three requirements: (*a*) Satisfactory suppression of noise with least back pressure, (*b*) lightest possible weight, (*c*) greatest durability. For the last year we have confined our attention to the first of these, believing that the other two could be successfully met if the first requirement were satisfied.

II. PRESENT DEVELOPMENT OF MUFFLING DEVICES.

The state of perfection at present reached in the muffling of auto-engines is well known. As far as this problem is concerned, it may be considered solved as regards suppression of noise. Not a great deal of scientific data are available. Some tests were carried on at the University of Michigan, an abstract of the report being published in the Horseless Age for May, 1915. Five types of mufflers were tested and investigated as to back pressure, horsepower loss, and muffling ability. Of the five, the one given the highest rank on all three counts has the construction shown in figure 1. The engine used was a nominal 25 horsepower automobile engine (Hudson 6-54, $4\frac{1}{8}$ by $5\frac{1}{4}$ inches), the test speed ranging from 750 to 1,300 revolutions per min-

ute. At the latter speed the brake horsepower reached 40. The muffler weighted 14.5 pounds, which is equivalent to 0.36 pound per horsepower, based on the maximum power, and had a volume capacity of 847 cubic inches, which is approximately nine times the cylinder displacement. All of the other mufflers weighed more, so that 0.36 pound per horsepower may perhaps be considered the present mini-

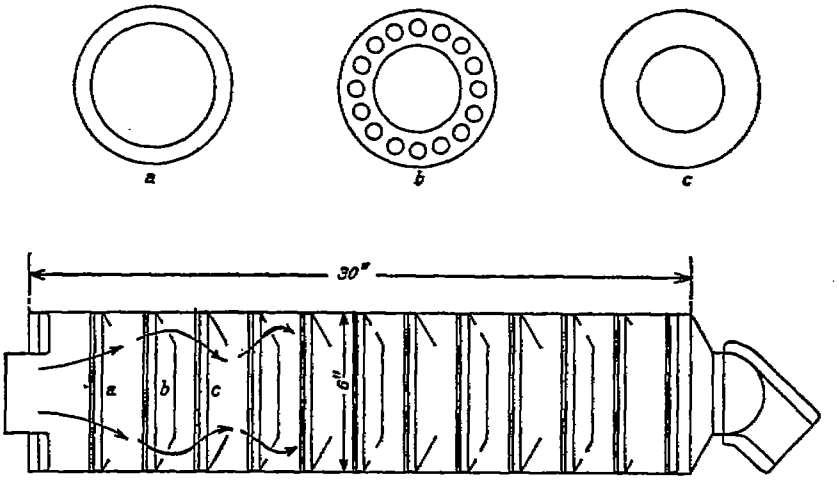

FIG. 1.

mum in automobile practice. This is a feature, however, of not as great importance as it would be in airplane practice. This muffler showed a back pressure of only slightly over 1 pound at the maximum speed, the loss of horsepower being only 1.4 per cent at the maximum. For automobile practice this must be considered an excellent showing.

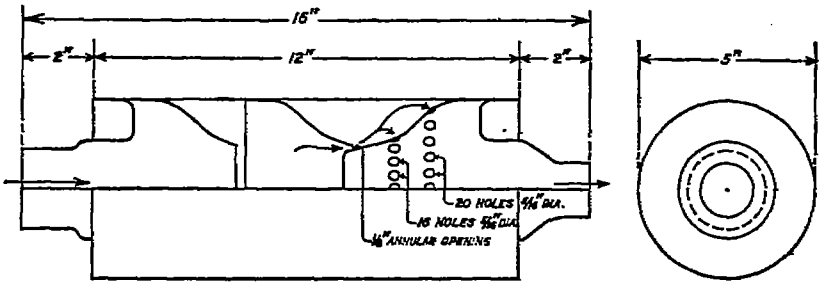

FIG. 2.

We were fortunate enough to obtain the loan of two mufflers especially designed for an 8-cylinder V-type engine and commercially manufactured. The smaller one of these mufflers is intended for a single cylinder and is 5 inches in diameter by 12 inches long. It has the construction shown in figure 2. The larger one, intended for four cylinders, is 5 inches in diameter and 28 inches long. The inter-

nal construction is probably made up of a multiplication of the elements of the smaller muffler. Both of these mufflers were tested by connecting them directly to the ends of the side manifolds by means of slip joints. Speed changes were noted by forcing the mufflers on and pulling them off by hand. This method of testing puts a heavier load on the smaller muffler than it is designed for, but since we did not have eight of them this was the only method available.

The tests on the smaller mufflers resulted as follows:

Throttle position on scale.	Back pressure, "Hg mufflers.		Corrected revolutions per minute, mufflers.		Back pressure increase, "Hg.	Speed drop.	
	Off.	On.	Off.	On.		Revolutions per minute.	Per cent.
4	0	0.25	933	933	0.25	0	0
5	0	.55	1,071	1,071	.55	0	0
8	0	1.90	1,257	1,143	1.90	7	0.52

Throttle position on scale.	Brake horsepower, mufflers.		Per cent horsepower loss.	Brake mean effective pressure (pounds per square inch), mufflers.		Loss of brake mean effective pressure, pounds.
	Off.	On.		Off.	On.	
4	28.8	28.8	0	48.6	48.6	0
5	43.4	43.4	0	64.0	64.0	0
8	69.8	68.6	1.5	87.7	86.8	0.9

The larger muffler gave the following results:

Throttle position on scale.	Back pressure, "Hg mufflers.		Corrected revolutions, per minute, mufflers.		Back pressure increase, "Hg.	Speed drop.	
	Off.	On.	Off.	On.		Revolutions per minute.	Per cent.
4	0.01	0.64	928	928	0.63	0	0
5	.025	1.5	1,066	1,060	1.48	6	0.51
8	0	4.0	1,268	1,240	4.0	28	2.24

Throttle position on scale.	Brake horsepower, mufflers.		Per cent horsepower loss.	Brake mean effective pressure (pounds per square inch), mufflers.		Loss of brake mean effective pressure, pounds.
	Off.	On.		Off.	On.	
4	28.3	28.3	0	48.1	48.1	0
5	42.8	42.1	1.5	63.4	62.7	0.7
8	72.1	67.4	6.6	89.7	85.8	3.9

It will be noted from these figures that, in spite of the unexpected load, the smaller muffler gives the better results. As a matter of fact, the horsepower loss at rated output for the larger muffler is prohib-

itive. On the other hand, several observers judged that the larger muffler more effectively quieted the exhaust noise. The two, however, are so close together regarding this point that it became difficult to judge of the difference in connection with the other noises. Our conclusion is that both mufflers are good with respect to quieting and that the greater efficiency of quieting in the larger muffler is bought at too great an increase in the back pressure. We have no hesitation in saying that the smaller muffler is as good a solution of the problem as we have yet seen.

III. THE EXPERIMENTS.

Experiments with devices constructed by us were carried out partly on a single-cylinder slow-speed machine, partly on a 60-horsepower 4-cylinder Maxim engine, and lastly on an 8-cylinder Curtiss engine.

The principle underlying the action of muffling is simple. At the moment of opening of the exhaust valve the pressure conditions are such that the gases issue at velocities of approximately 2,000 feet per second. The problem is to reduce this velocity below that of sound (1,100 feet per second) without causing undue back pressure. The bark of the open exhaust is due to the issuing of the gases at velocities higher than that of sound, and the main disturbance is suppressed as soon as the velocities are brought below 1,100 feet per second. The means at hand to accomplish this are: (*a*) Cooling of the gases to reduce volume, (*b*) gradual expansion, (*c*) internal friction and eddy currents in the gas, and (*d*) frictional resistance between gases and containers and baffles. Of these the first mentioned is practically negligible, as the degree of cooling can not be great in the time available.

To bring into play the other three means would require a construction having the following essentials: (*a*) An entrance chamber several times the cylinder volume, to allow of the unrestricted transfer of the gases from the cylinder to this chamber, for the purpose of preventing undue back pressure, and (*b*) one or more expansion chambers so provided with baffles as to break up the gas currents in such a manner as to cause decreasing velocity by means of both expansion and friction.

As far as application to the engine is concerned, three solutions are possible. The first is to use individual mufflers for each cylinder. This scheme at first sight has a good deal in its favor, but upon analysis several prohibitive disadvantages will appear. In the first place, there is no doubt that, say, 8 small mufflers will weigh more than 2, each taking care of 4 cylinders. In the case of the commercial muffler above mentioned, the weight relation is 15 pounds for 4 individual mufflers to 6 pounds for the single muffler doing about the same work. Further, the advantage that a 4-cylinder manifold will in itself act partly as a muffler is lost, and we would have the individual bark of each cylinder to deal with. And, finally, where the scheme had been tried it was found very difficult to properly stay so many mufflers as to prevent dangerous vibrations.

The second scheme is to combine manifold and muffler, i. e., to internally construct the manifold to convert it into a complete muffler. This scheme also looks good at first sight; but in order to provide sufficient volume a manifold so constructed would be of large

diameter, since the lateral distance between cylinders is restricted, and it is a question whether it is desirable to place so large a heat-radiating surface next to the cylinders and the structural members of the plane. The question of adding weight at that height from the base to the side of the cylinders is also of importance with relation to possible excessive vibration. We tried one scheme of this kind on the Maxim engine, as below noted, but with doubtful success.

The third scheme is to use a regular manifold and to connect this by means of flexible hose to the muffler proper. This allows of any convenient placing of the muffler with reference to engine and to operator. The length of exhaust hose is of no importance, consistent only with low back pressure, and, given this, a considerable length of hose or pipe is a positive help to the muffler. We believe on all counts that this combination is the best solution.

The first experimental construction embodied the idea of making the entrance space a centrifugal whirl chamber in which the gases were to lose part of their kinetic energy by mutual interference before passing out through holes or slots in a central pipe. It was made up out of a 4-inch tee, the side branch of which was capped, and the cap then bored and threaded for the 1½-inch exhaust pipe, of a 6-horsepower oil engine. The opening from this pipe was placed eccentrically in the cap, so that the gases entered the 4-inch tee tangentially. One of the straight-run openings of the tee was plugged, while the other was bushed to receive a 1½-inch pipe. The pipe could be extended varying distances into the tee by a long thread. Tests were made with this central pipe not perforated in any way, but open at the end. The best results were found when this pipe extended to within ½ inch of the opposite plug. Later the end of the central pipe was plugged and the pipe perforated with holes, a second one was then tried perforated with slots. In these cases the gas, after whirling around in the chamber, found its way into the central pipe through the holes or slots and so on out. All of these devices were only moderately successful and did not seem to promise much.

It was then thought desirable to improve the entrance conditions to the whirl chamber by gradually broadening the entrance pipe, thus introducing the gas tangentially in a wide band. Figure 3 shows the construction. Three concentric central pipes, a 4-inch, a 3-inch, and a 2-inch were used, the latter being open to the air at both ends. The central pipes were slotted, the 4-inch and 3-inch pipes as in figure 3–a, the 2-inch pipe as in figure 3–b. It was found that the direction of the slots in the inner pipe caused the gas to move out of one end of the pipe, creating a distinct suction on the other end. This device showed up much better than the crude first construction. It was estimated to cut out 80 per cent of the noise. Back-pressure readings were not taken, as we were as yet mainly interested in noise reduction.

The success of this device on the particularly vicious bark of the oil engine on which it was used led us next to construct a combined manifold and muffler of this type for the Maxim engine. The main features of this muffler were: An expanding, flattened nozzle from each cylinder to lead the gas tangentially into the shell, a common annular chamber between the largest inserted pipe and the shell into

which the exhaust from all cylinders first entered, a series of four pipes 2, 3, 4, and 5 inch, with perforations so arranged that the gas must first pass through the wall of the 5-inch pipe in a slanting direction, and having attained a certain velocity in this direction must turn and pass through the 4-inch in the opposite direction because of the slotted openings. Another turn was necessary to pass through the 3-inch, and finally through the 2-inch to the atmosphere.

We did not succeed in getting a very good idea of the action of this manifold muffler, as the Maxim engine, which had been loaned us, was recalled. The trial run made promised fairly well, but the end joints between the pipe were not tight and considerable gas escaped. As built, with a cast-iron jacket, this muffler proved exceedingly heavy.

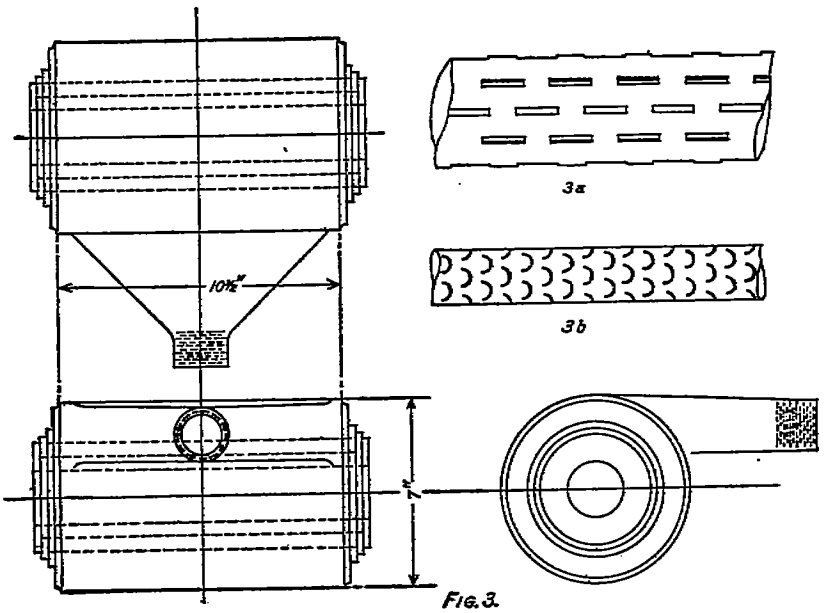

FIG. 3.

We have not done anything more with the manifold mufflers, but intend to try out one or two other ideas, which, however, have so far reached only the design stage.

The last work was done on an entirely different type from that above described. The underlying idea in this type is to provide an ample receiving chamber, and then as the gases work toward the outlet, to provide gradually increasing resistance, until the pulsations are toned down and the gas issues in streams of fairly constant velocity at speeds below that of sound. This should substitute for the bark a hiss like that of escaping steam of low pressure. It might be pointed out that the well-known Maxim muffler is of this general type. Only in this muffler the circular receiving chamber is followed by an annular space surrounding the former, which space is packed with baffle plates of spiral form. The gases here lose velocity by internal friction and surface friction. No attempt is made to utilize the idea of a gradually increasing resistance to the flow toward the outlet.

The scheme was tried out on the 8-cylinder Curtiss engine. Two manifolds of light-weight steel were cross connected by another manifold, so that we finally had a single discharge and only one experimental muffler had to be built. The construction of this is shown in figure 4.

We adopted for this muffler the prismatic form for two reasons. In the first place, it is easier to construct than the circular form; and secondly, we believe that this form may have some advantages over the circular form for stowing away on an airplane. The essential features are as follows: Gradually expanding entrance nozzle A, a receiving chamber B, two expanding and retarding chambers C and

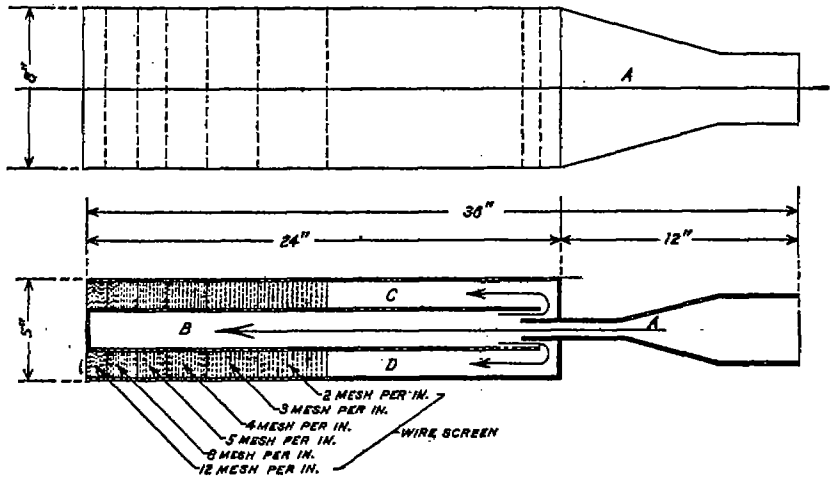

FIG. 4.

D. About half of the two expansion chambers are filled with closely packed wire gauze of decreasing mesh, in the following order going toward the outlets:

	Layers.
8½ inches of 2 meshes per inch	28
2½ inches of 3 meshes per inch	26
2 inches of 4 meshes per inch	24
1½ inches of 5 meshes per inch	18
1½ inches of 8 meshes per inch	20
1 inch of 12 meshes per inch	25

This muffler was connected to the outlet of the cross manifold by a short piece of flexible metallic hose and in parallel with a quick-closing gate valve. By this means the exhaust could be instantly changed from muffler to open air and back again. An electric tachometer, carefully calibrated, was used to note changes in speed, and the back pressures were observed by means of mercury manometers connected to the side manifolds near their connection to the cross manifold.

Trials with this muffler showed the following:

(*a*) The application of the side manifold and of the cross manifold alone served to tone down the barks considerably. The back

pressure observed with only the side manifolds was negligible and with the cross manifold showed about 0.3-inch Hg. at rated output of 70 horsepower.

(*b*) The application of the muffler raised the back pressure only about 0.1-inch Hg., which is a very good result. The power loss is negligible.

(*c*) As far as muffling is concerned, three observers judged that the exhaust noise was cut out to the extent of about 50 per cent.

We believe that the muffling efficiency of this construction can be improved, and we have already started to work out an improved design. The virtual absence of back pressure is the most encouraging feature. Objection has been made to this design on the score of carbon clogging of the wire gauze. Only a service run of some hours' duration can prove this point.

At present we have not used any quantitative scheme of judging degree of noises, but have depended upon several independent observers. This scheme is not wholly successful on account mainly of the other noises present besides the exhaust. As a matter of fact, to get any idea at all of this matter in connection with the Curtiss engine, it became necessary to extend the pipe through a window and to place the muffler outside of the building. In the University of Michigan tests, above quoted, besides using independent observers, a telephone was used, the observer in a room some distance away noting the distance between himself and the telephone at which he failed to distinguish the exhaust noise. The receiver was placed near the engine. What such a scheme would show in our case is problematical, but we intend to try it out the coming year. We wish gratefully to acknowledge in this connection the active help of Profs. V. R. Gage and C. A. Peirce, of the Sibley College faculty, and the assistance and facilities supplied by the Thomas Aeromotor Co., of Ithaca, N. Y., and the Curtiss Aeroplane & Motor Corporation, of Buffalo, N. Y.

Further experiments will be made on this type of muffler construction and the determination of the laws affecting feed back pressure power loss are already being investigated and will be the subject of a future report.