REPORT No. 49.

METERING CHARACTERISTICS OF CARBURETORS.

PART I.—Description of Carburetor Test Plant.
PART II.—Discharge Characteristics of Fuel Metering Nozzles in Carburetors.
PART III.—Characteristics of Air Flow in Carburetors.
PART IV.—Effect of Pulsating Air Flow in Carburetors.
PART V.—Natural Metering Characteristics of Carburetors.
PART VI.—Control of Carburetor Metering Characteristics for Aircraft Service.

PART I.

DESCRIPTION OF CARBURETOR TEST PLANT.[1]

By Percival S. Tice.

RÉSUMÉ.

The Bureau of Standards carburetor test plant has been designed for convenient, speedy, and accurate observations of carburetor performance, without inclusion of the complications attendant upon engine performance in such testing. It comprises an orifice air meter, supplying air to a miniature altitude chamber, in which the carburetor is mounted. Air is drawn through the carburetor by a vacuum pump, and flow pulsations in the air stream are simulated by an apparatus controlling both the rate and amplitude of the pulsations. Pressure within the carburetor chamber can be lowered from that of the atmosphere to approximately one-quarter of an atmosphere; and the air temperature can be raised to any desired value above that of the atmosphere.

Weighing of the fuel and observations of pressures about a carburetor permit of determining the mixture ratios and coefficients of flow under any service conditions.

DESCRIPTION OF CARBURETOR TEST PLANT.

The Bureau of Standards carburetor testing plant was designed and built for the purpose of insuring greater precision and speed in observations of carburetor metering characteristics than are conveniently possible where the carburetor is in use on an engine. It is designed to permit observations not only at atmospheric pressure and temperature, but also at air pressures as low as one-third of an atmosphere, and at such temperatures as may be desired above atmospheric temperature. Means are also provided for producing pulsations of the air flow, comparable in speed and amplitude to those met with in practice. Thus it is possible to reproduce substantially any condition which may obtain in service on an engine, and at the same time variables due to the engine condition are eliminated. The course of the investigation is so simplified as to make it possible for one man to control the whole plant and make all observations incident to a set of runs. While the results obtained usually require checking on an engine in operation, the final stage is reached more quickly, conveniently, and at far less expense, as well as more accurately than if all the tests had been made on the engine.

The set-up comprises the following several units:

(1) The air meter.
(2) The throttle valve.
(3) The air heater.
(4) The carburetor chamber.
(5) The pulsator.
(6) The air pump.
(7) The fuel meter.
(8) The manometer columns.

[1] This report was confidentially circulated during the war as Bureau of Standards Aeronautic Power Plants Report No. 43.

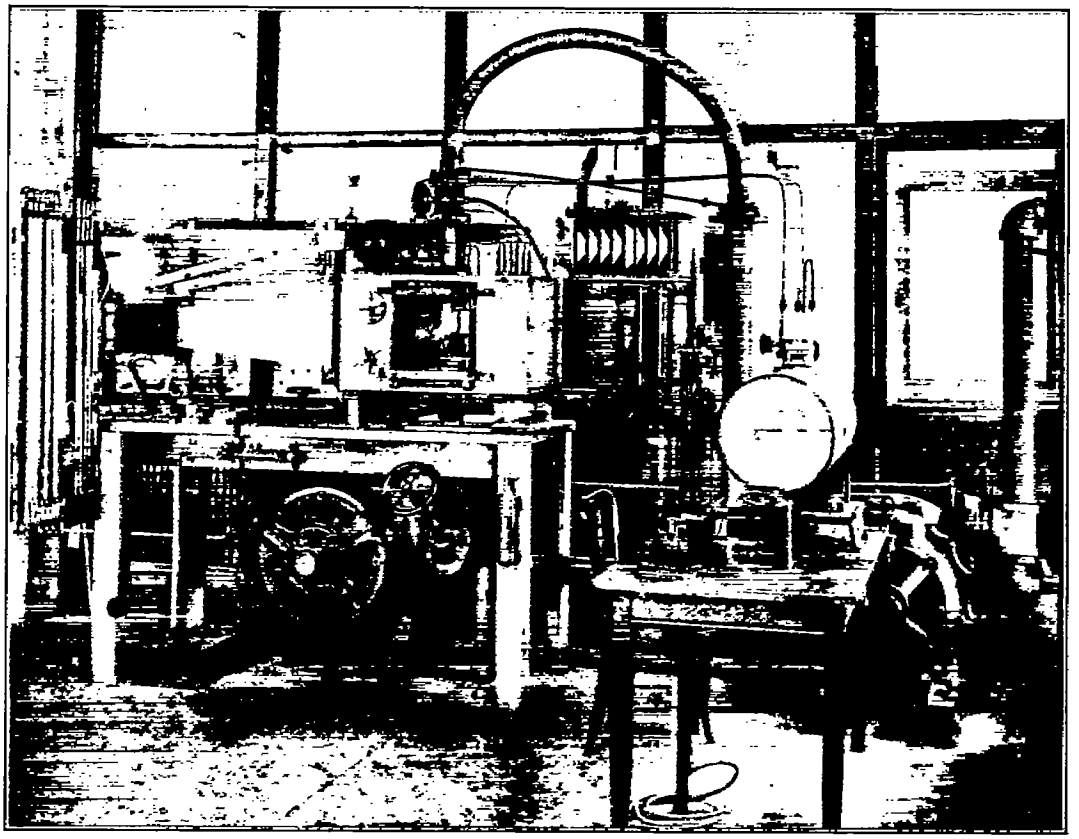

FIG. 1.—GENERAL VIEW OF CARBURETOR-TESTING PLANT, IN WHICH THE PERFORMANCE CHARACTERISTICS OF CARBURETORS CAN BE STUDIED AND DEVELOPED WITH REFERENCE TO THE SPECIAL REQUIREMENTS OF ANY SERVICE.

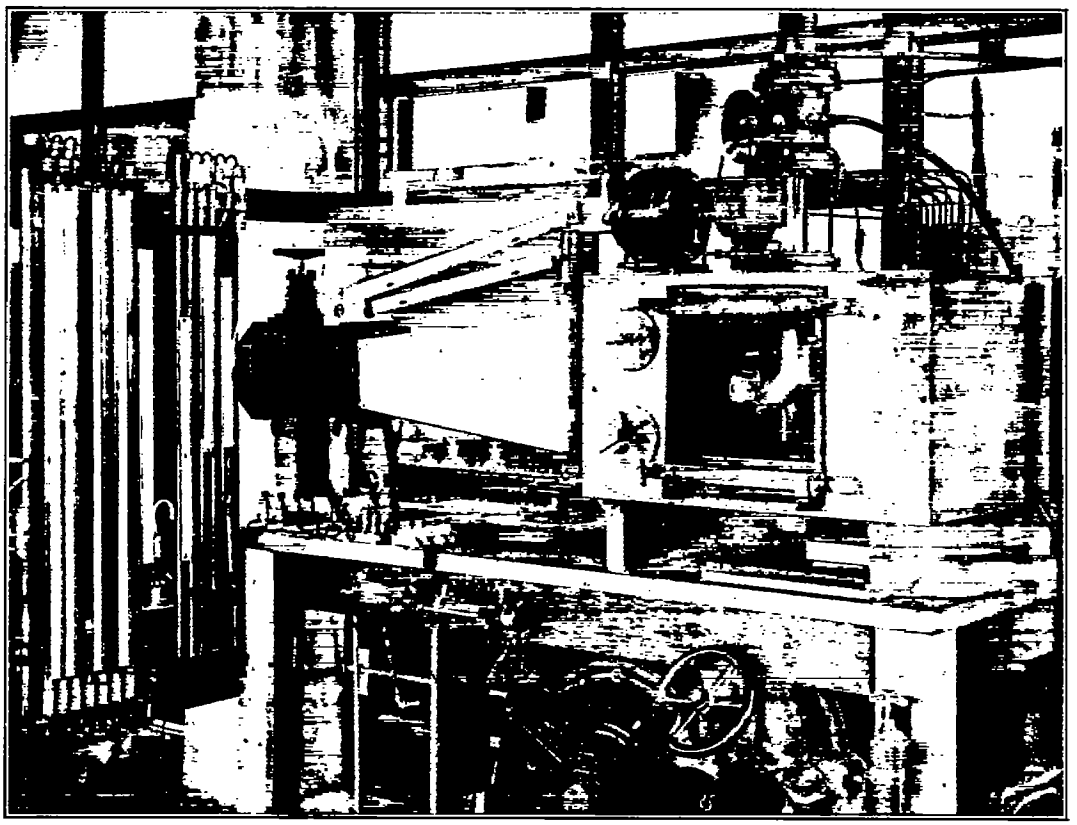

FIG. 4.—CLOSE-UP VIEW OF THE AIR HEATER AND ITS CONTROL SWITCHES, THE CARBURETOR CHAMBER, THE PULSATOR, AND THE MANOMETER COLUMNS.

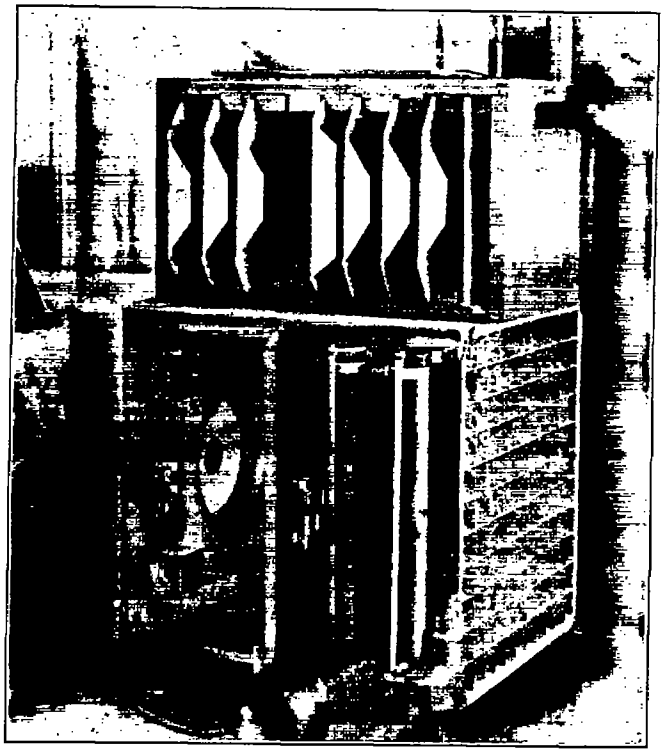

FIG. 2.—AIR METERING ORIFICES, WITH DETAIL OF THEIR MOUNTING AND OF THE APPROACH PASSAGE.

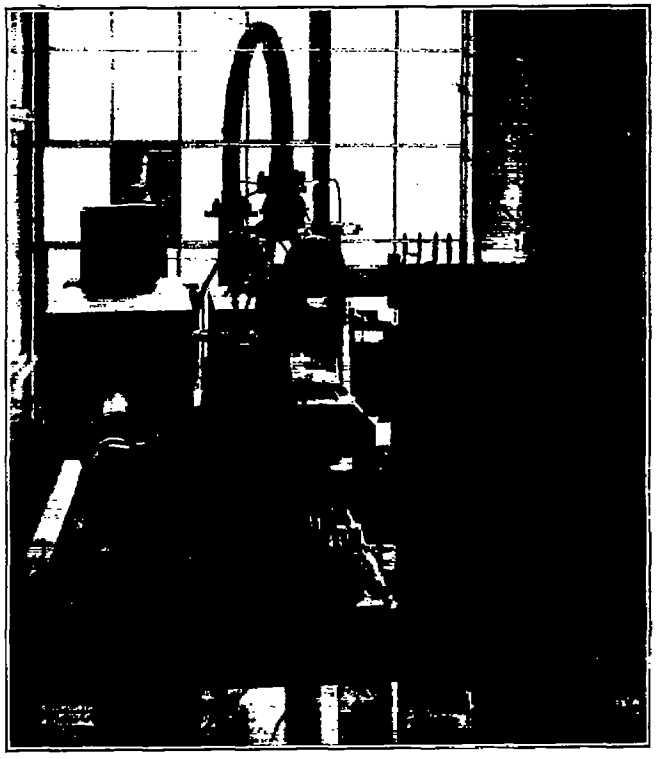

FIG. 3.—END VIEW, SHOWING THE THROTTLING VALVE FOR CONTROL OF THE CHAMBER PRESSURE, AND DETAIL OF THE MANOMETER LINES.

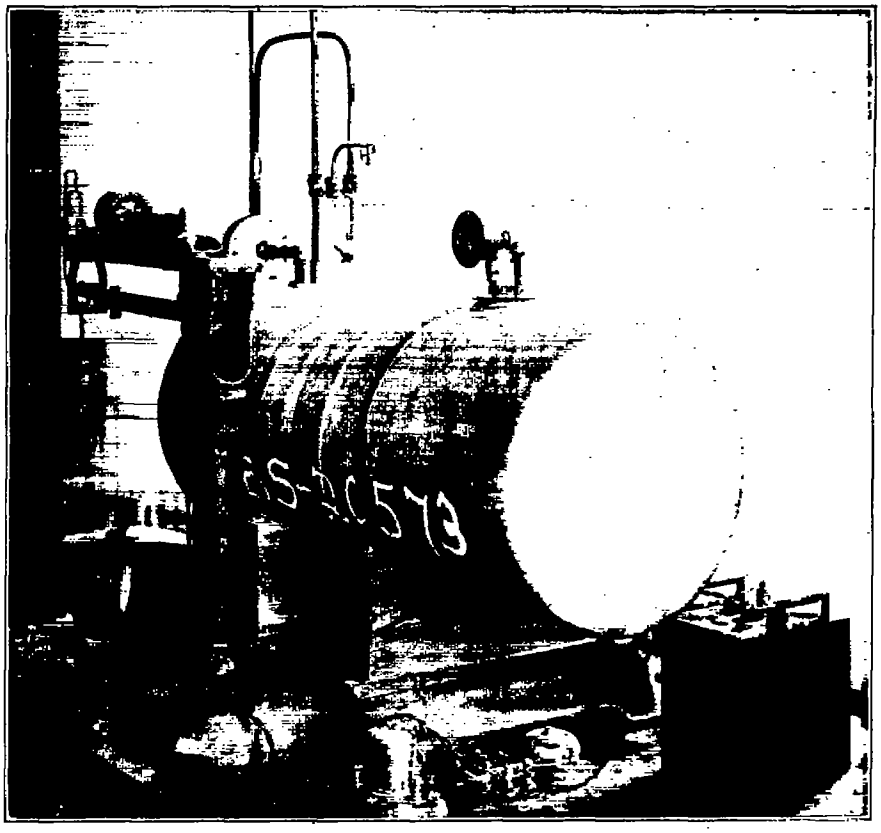

FIG. 8.—THE FUEL METERING SET-UP, SHOWING THE FUEL TANK, SCALEBEAM CONTROL OF THE STOP WATCH, PRESSURE-REGULATING VALVE, AND THE TRAP FOR VAPOR AND SEDIMENT.

To follow the course of the air through the plant: It first passes the air meter, then flows through the throttle valve and over the heating grids to the carburetor chamber. Here it enters the carburetor under observation, after which it passes through the pulsator to the blower pump, from which latter it is discharged to the atmosphere.

The general appearance and arrangement of the plant are shown in figure 1, in which view the convenient grouping of the controls is clearly brought out.

A detailed description of the several units of the plant follows:

THE AIR METER.

This portion of the plant follows exactly the specifications laid down by Durley [2] in his work on air flow through orifices in thin plates, with the one exception that the direction of flow is reversed with reference to the orifice box or chamber. Since, however, the cross sectional area of the chamber in a plane parallel to that of the orifice is somewhat over the limiting value of 20 to 1 referred to the maximum orifice area employed, and since the drop in pressure across the orifice is never permitted to exceed 6 inches of water column, the fact that the air flow is into instead of out of the chamber is of no consequence in the measurements.

Figure 2 is close-up view of the orifice end of the metering chamber. Here are shown the approach passage with its grid for the purpose of protecting the lines of flow into the orifice from disturbance by stray room currents, and the structural details of the orifice mounting. The orifices are bored in steel plates 0.057 inch thick, with perfectly square edges, and range in size from 3.500 inch to 0.500 inch, by 0.500 inch decrements. There is provided in addition, an orifice of 0.3125 inch diameter, and also a blank plate used for checking the tightness of the chamber and throttling valve. The orifice plates seat upon a rectangular gasket of pure gum rubber of one-quarter inch thickness, thus insuring air tightness even though the plates are sprung in locking them upon the end of the chamber.

The pressure drop across the orifice is read on the upper of the two inclined manometers shown above the pyramidal approach to the carburetor chamber, figure 1. This manometer is provided with a scale having divisions 1 millimeter apart, and is set at such an angle that each division is equal to a vertical rise of the column of 0.01 inch. This readily permits an accuracy of observation of plus or minus 0.0025 inch on the deflection of the column. In addition there is provided a short vertical water column, at the immediate left of the carburetor chamber, having a scale divided into fiftieths of an inch, and read through a magnifier, with provisions for the avoidance of parallax. This latter column is fitted with a tank having one hundred times the area of the tube, thus its readings are at all times 1 per cent too small. While the inclined column is also connected with a tank (in this case a Wolff bottle at the back of the board) the inclination of the tube is so adjusted that no correction need be made.

THE THROTTLE VALVE.

A length of 3-inch pipe connects the orifice chamber with the gate valve shown in the foreground of figure 3. The function of this valve is the control of the pressure within the carburetor chamber, in a study of the performance characteristics of carburetors under atmospheric pressures lower than that at the ground. The manipulation of the throttling valve will be discussed in detail in that section of the description devoted to the method of control.

THE AIR HEATER.

For the purpose of observation of the effects of varying air temperature on carburetor performance the air, after it has passed the throttling valve, is drawn through a chamber composed of a set of five frames, in each of which is mounted a coil of resistance wire in such a manner as to cause it to be reasonably completely swept by the air stream. As shown in figure 4, the five units of the heater are wired to controlling switches and a rheostat in such manner that

[2] R. J. Durley, Trans. A. S. M. E., xxvii, 193. The reader is referred to this original pa er for complete discussion of the desirability of employing flow through orifices in making air measurements.

three of them are supplied with current at 220 volts, without external resistance, when their respective control switches are closed, while the fourth may be thrown into circuit on either 110 or 220 volts as desired. The fifth unit is in series with a rheostat, and may also be supplied from either the 110-volt or the 220-volt lines, as required.

The capacities of the units are identical and the control is such as to permit of extremely delicate regulation from about 3° above the atmospheric temperature up to 45° C. above that temperature, with the maximum air flow of which the plant is capable. Chamber temperatures are read on a mercurial thermometer mounted just within the glass door, as in figure 1.

THE CARBURETOR CHAMBER.

Leaving the heater, the air passes through the pyramidal approach passage to the carburetor chamber. Mounted in the entrance to the latter is a grid similar to that shown in the approach to the air metering orifice. The increasing sectional area of the approach to the carburetor chamber and the grid just mentioned are designed to obviate to a large extent the eddy currents that might be expected to exist within the chamber should the air be introduced in a column of small section at higher velocities.

The carburetor chamber comprises a box 18 by 18 inches at the ends (outside) and 30 inches long (outside), built up of yellow-pine boards 2 inches thick. Inside, at each junction of abutting walls, the structure is reinforced by a fitted length of 2-inch angle iron. The door opening is recessed to take a steel frame made up of ¾-inch square stock, the outer face of which is flush with the face of the chamber. Over the whole is fitted a solder-sealed sheathing of galvanized iron, and supported by the turned-up edge of the sheathing at the door opening is a rectangular gum rubber gasket, ¼ inch thick, having a ¾-inch face. The glass door, shown in figure 4 resting on the table beneath the carburetor chamber, is of plate glass, ¾ inch thick, and is supported and clamped in place over the opening and against the gasket by the pair of steel bars shown at the top and bottom of the opening.

The heavy construction of the chamber is necessitated by the great pressure to which the walls are subjected when the pressure within the chamber is reduced, as in studying high-altitude performance of carburetors. The sheathing of galvanized iron is employed to insure air-tightness This form of sheathing is also applied to the pyramidal approach, and to the orifice chamber.

Within the carburetor chamber, and in the center of its top wall, is mounted a circular flange to which the several carburetors studied are secured with interposed adapters. At the left of the door opening is a pair of control spindles, with adjustable levers inside the chamber, for the control of the throttle and whatever other control member may be provided in the carburetor.

A sleeve, integral with the carburetor flange within the chamber, extends through the top wall to form an air-tight joint with a large circular flange secured to the outside of the chamber

The carburetor outflow passage consists of a glass tube held in glands spaced by four ⅜-inch studs. Several advantages result from making this portion of the outflow passage of glass. The quality of the charge, with respect to the fineness of division of the liquid, is shown; irregularities in the fuel discharge are made obvious; it can be seen whether or not the passages of the carburetor cause swirling of the air stream; and localization of the liquid in the stream or on the wall is definitely shown. In addition to the above, observations of the glass serve as a ready check on the functioning of the float mechanism of the carburetor.

THE PULSATOR.

Mounted just above the carburetor discharge passage is the pulsator, a device for creating pulsating flow through the carburetor, closely following in character those fluctuations of pressure and velocity experienced in the operation on an engine. The exterior of the pulsator is shown photographically in figure 4, and its construction and control are diagrammed in figure 5.

The pulsator body is a casting with a rectangular passage for the mixture discharged by the carburetor. Normal to and intersecting the axis of the passage is a spindle carrying a

rectangular throttle plate. Secured to the front and the back walls of the rectangular passage are plates of spring bronze, which are normally flat, and cause no restriction of the passage. These spring plates form flexible walls for the passage, and permit of varying its effective area in the plane of the throttle spindle.

A one-sixth horsepower shunt motor, mounted on the top of the carburetor chamber, is arranged to drive the pulsator spindle through three-step pulleys. The control of the speed is supplemented by field resistances; and a magnetic tachometer is used to show the speed of the spindle. These latter items are shown in figures 1 and 2, mounted on the front wall of the metering orifice approach passage. The tachometer is one built for cam-shaft drive on an engine and thus reads directly in pulsations per minute, since the pulsator throttle sweeps the passage twice for every revolution. The range of control provided permits of a change in rate of pulsations from 600 to 4,000 per minute. This is equivalent to a range of engine speeds from 300 to 2,100 in the case of four cylinders, and from 400 to 2,800 r. p. m. in the case of three cylinders per carburetor.

The amplitude of the pressure pulsations is controlled by manipulation of the screws shown in figures 4 and 5, to cause the spring plates to approach the edges of the throttle plate more or less closely as the throttle revolves. Thus it is possible to reproduce sufficiently faithfully for the purpose in hand, the pulsation characteristics of any engine cylinder combination of more than one cylinder, having the aspiration strokes evenly spaced.

A simple form of optical indicator is employed to show the magnitude of the pressure fluctuations in the carburetor discharge passage. This indicator is shown in diagram in figure 6. No attempt is made to make a pressure-time diagram of the pulsations. The magnitude of the pressure fluctuations is read from the calibrated screen of the indicator, on which appears a line of light, the ends of which define the values of the upper and lower pressure limits.

THE AIR PUMP.

A Nash "Hydroturbine" vacuum pump is used to draw the air through the carburetor. Its intake is connected with the pulsator outlet by a length of flexible metallic tube, as shown in the general view, figure 1; and the pump discharge is carried out through a window of the laboratory.

Between the pulsator flange and that on the end of the flexible tube is a throttling opening and trap. This latter serves the double purpose of eliminating the effect upon the carburetor of resonance in the length of flexible tube when the pulsator is in action, and of trapping and passing directly to the pump the liquid that would otherwise accumulate above the pulsator with small air flows. This liquid passes to the pump intake through a inclined length of ⅜-inch pipe.

The Nash pump is that company's No. 3 size, and is capable of reducing the pressure within the carburetor chamber to 180 mm. Hg., or to 180/760 = 0.237 atmosphere, with the throttling valve fully closed. Between the limits of the barometer column of 350 mm. and one of 760 mm. the weight of air pumped is a straight line function of the pressure. The capacity of the pump as applied to this plant is shown graphically in plot 7, in which the weight of air pumped is plotted against barometric pressure and also against pump speed at a chamber pressure of 740 mm.

THE FUEL METER.

Reference to figure 8 shows the details of the fuel-weighing method. A 30-gallon tank is mounted on a platform scale, and supplies the carburetor float chamber through an overhead line, by virtue of a pressure difference maintained between its interior and that of the carburetor chamber. The tank is provided with a gauge indicating the pressure applied to the fuel; and a pressure regulating valve in the line is adjusted to maintain a pressure difference between the tank and the chamber of 2 pounds per square inch. After passing the pressure regulating valve, the fuel enters a vapor trapping chamber set upon the tank, and from this point flows through a line of ⅜-inch (o. d.) copper tube to a valve and fitting in the top wall of the carburetor

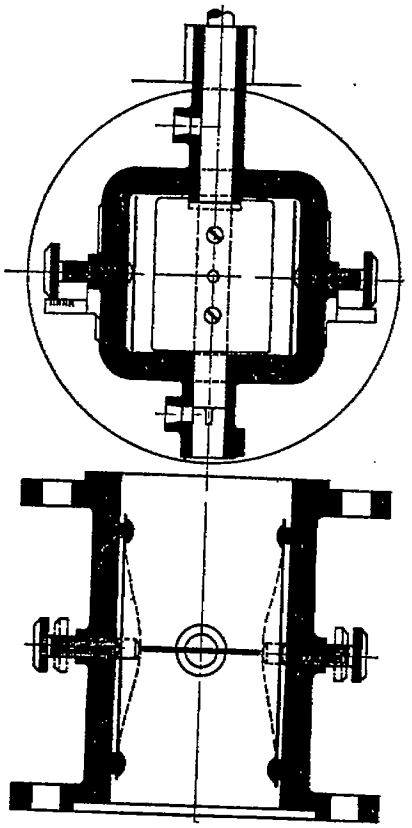

Fig. 5.

Diagram of the pulsator design, showing how the area of the passage in which the rotor operates may be altered to modify the magnitude of the pressure fluctuations.

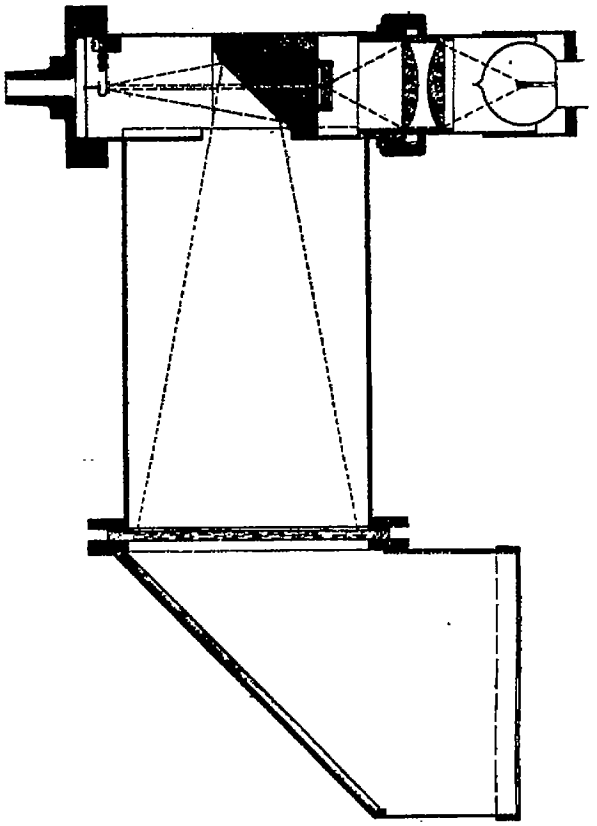

Fig. 6.

Diagram of the pulsation indicator. Light from the small lamp is focused to a parallel beam which is reflected from the flexibly mounted mirror oscillated by the diaphragm to an inclined mirror, which in turn reflects the beam to a graduated screen on which the deflection of the light spot is read.

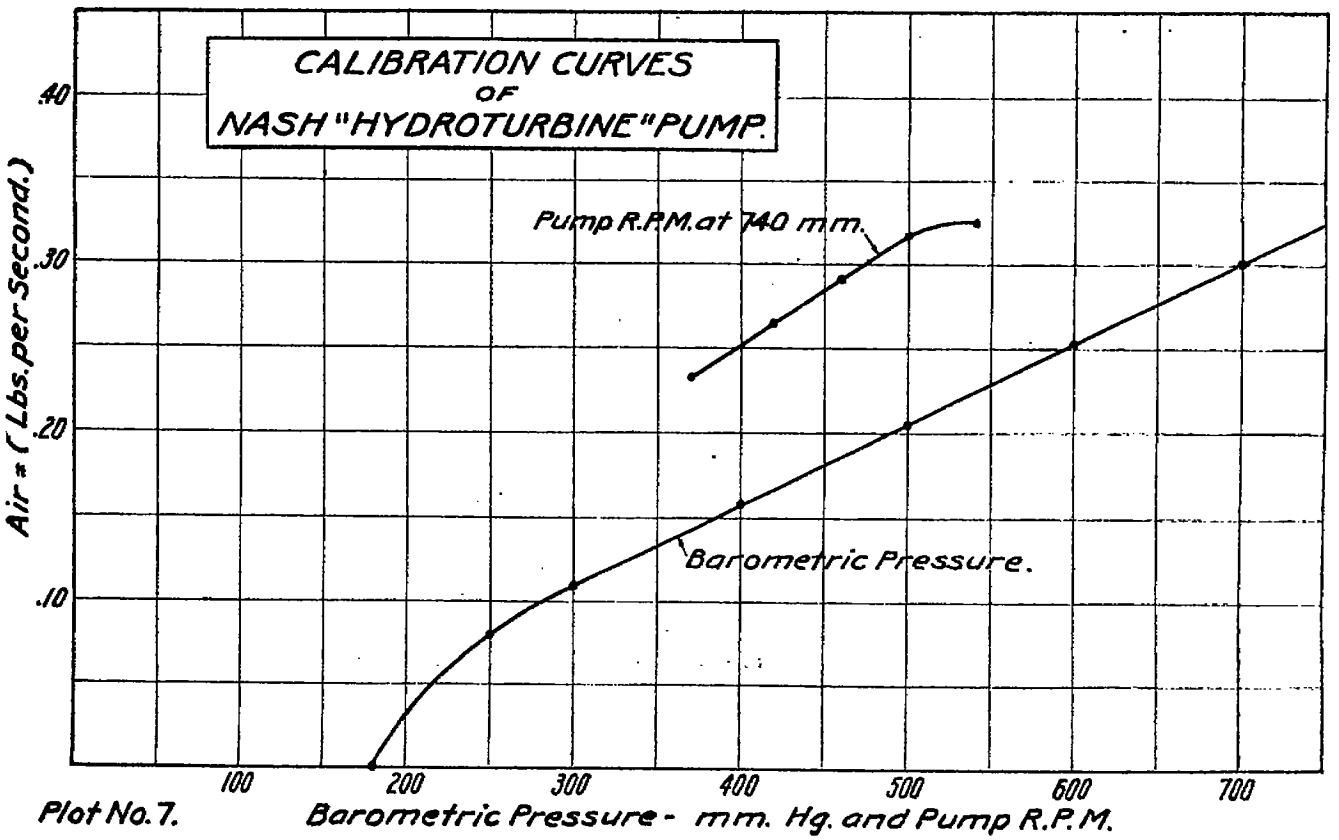

Plot No. 7.

chamber. From this fitting, the connection with the carburetor is completed through a length of airplane fuel hose.

The beam of the scale is fitted with a contact arm, which upon falling of the beam dips into a mercury cup and completes a circuit through a magnetic apparatus controlling the starting and stopping of a stop watch. Closure of the circuit through the watch control also completes the circuit through an annunciator, thus drawing the attention of the operator to the fact that a run has started or ended, as the case may be. This method of timing a weighing possesses the advantages of making the weighing automatic, and eliminating the personal equation in the operation of the watch, and of permitting the operator to devote his attention to the controls and the making of observations throughout a run.

THE MANOMETER COLUMNS.

A rectangular flange soldered to the carburetor chamber sheathing carries 12 union fittings to which are secured 12 manometer lines of ¼-inch (o. d.) copper tube. The union fittings extend into the chamber approximately 1½ inch beyond the walls, and to them can be connected with rubber tubing the several points about a carburetor at which it is desired to take pressure observations. The manner in which the manometer lines are carried to the board supporting the columns is clearly shown in figures 1, 3, and 4.

One of the manometer lines, the seventh from the left side of the manometer board, is used to communicate the chamber pressure to barometer located at about the center of the board, to the left leg of the first mercury U tube and to the tank on the back of the board. This tank contains water, and forms the well against which the set of six water columns, at the left, are balanced. The water columns are capable of useful deflections of 1,020 mm. (40 ins.); and each is provided with a needle valve shut-off. The seventh and middle short water column has its upper end communicating with the air space of the tank at the back of the board and serves as an indicator of the zero position. Inspection of figure 4 will show that the scales of the water columns are mounted to form a unit capable of vertical movement under control of the screw passing through the header from which the columns draw their water. Thus it is possible to reset the scales during a run to correct for the displacement of the zero following the transfer of water from the tank to the columns. The tank is made of sufficient area so that with three columns standing full the error in observation is only 1 per cent, with the scales left in the zero position given them before deflection of the columns. Hence, since it is only very rarely that more than three columns are in simultaneous use, and then at much less than maximum deflection, the error in observation without resetting of the zero is ordinarily well within 1 per cent.

In addition to the six water columns discussed, and the main barometer for indicating the chamber pressure, the board includes a pair of mercury U tubes, and a supplementary U-tube barometer. Both legs of the second U tube are capable of connection within the chamber, for making differential readings not referred to the chamber pressure, or for making plus pressure observations. The auxiliary barometer tube is used where it is desired to make direct observations of absolute pressure at some point about a carburetor. It is obvious that by use of T fittings and tubing within the chamber the columns can be interconnected in any combination that may be required to fit the case under observation.

METHOD OF OPERATION.

Most of the work that has been done in the carburetor testing plant has been with special reference to the requirements of certain aeronautic type engines, and as a consequence the weights of air to be taken through the carburetor under given surrounding conditions have been well established beforehand by direct observations on the engines themselves in the Bureau of Standards' altitude laboratory. This points out one of the chief uses of the plant, in that special requirements of individual cases, as well as the desirable range of operability of a carburetor, can be studied in detail and with a maximum of convenience and a minimum of cost and lost motion.

The 25-horsepower motor used to drive the pump is a shunt type, and is provided with resistances in the field circuit for effecting control of the pump speed. These resistances are shown on the table sill in figures 1 and 4.

With the pump in operation, the amount of air taken through the carburetor is controlled by (1) the position of the carburetor throttle, (2) the position of the throttling valve between the meter chamber and the air heater, and (3) the position of the gate valve on the pump intake, which faces the driving motor beneath the table and is controlled by the wheel at the table edge, as in figure 1. This latter valve controls the depression in the carburetor outlet, and in this way the air taken through the carburetor. The throttling valve, on the other hand, controls the amount of air pumped, through its influence upon the pressure, and therefore the density, of the air in the carburetor chamber.

Assume the case where it is desired to take a given weight of air through the carburetor at a given barometric pressure and with a given pressure drop in the carburetor outlet, corresponding to a run under partial throttle opening. Having located a suitable orifice in the entrance to the meter chamber, the pump intake by-pass valve and the throttling valve are adjusted to give the required deflection of the orifice manometer at the required chamber pressure. This establishes the air flow referred to the chamber pressure, and so long as the throttling valve remains undisturbed, subsequent adjustment will realize the one when the other is realized. To complete the setting of conditions, the carburetor throttle position is adjusted in combination with the pump intake by-pass, to give the required carburetor outlet pressure at the chamber pressure previously set. When this is attained, and it is very speedily accomplished, all three pressures are at the desired values.

One of the chief functions of the plant is the accurate determination of the ratio of air to fuel in the mixture. Having set the air flow and other conditions incident to it, as above, the weights on the fuel scale are adjusted so that the beam is about to drop. When this occurs, through removal of the liquid from the tank under demand by the carburetor, the circuit through the watch control is closed and the watch started. The required weight is now removed from the scale beam, and the operator is free to record his observations of pressures, temperature, pulsator speed, and amplitude, and to maintain the setting, should this be required, while the run goes on. When the predetermined weight of fuel has been metered by the carburetor, the scale beam again drops, stopping the watch. A record of the time taken for the given weight of fuel completes the run.

For convenience, graphs have been prepared showing the discharges in pounds of air per second plotted against difference in pressure for each of the several metering orifices included in the equipment. Other charts are developed for special cases, and will be discussed in detail in those reports dealing with the cases in which they are used.

In general carburetor development work, that is, without special reference to a particular engine or class of service, the extreme flexibility of the plant permits the whole usable range of operation to be investigated under any and all of the combinations of conditions likely to be met in service.

REPORT No. 49.

PART II.

DISCHARGE CHARACTERISTICS OF FUEL METERING NOZZLES IN CARBURETORS.

By Percival S. Tice.

RÉSUMÉ.

The following report is a discussion of experimentally determined variations in the value of the coefficient of discharge for small bore, short passages as used to meter fuel in carburetors.

Variations in the overall coefficient (C) are discussed with respect to passage diameter, passage length as a function of the ratio of length to diameter (L/D), form of entrance, and effect of change in fluidity of the fuel with temperature change.

The most important conclusion reached is that control of the range of mixture ratios delivered by a carburetor is obtainable throughout the practical limits of desirability by simple selection of the ratio of length to diameter (L/D) for the fuel metering passage, provided other conditions remain substantially constant.

DISCHARGE CHARACTERISTICS OF FUEL METERING NOZZLES IN CARBURETORS.

The discharge of liquid from carburetor fuel metering passages or jets is most conveniently considered when the characteristic values of the overall coefficient (C) in the expression $V=C\sqrt{2gh}$ are studied. This expression becomes

$$W=60.2\ C\,a\sqrt{\rho}\ \sqrt{h} \tag{1}$$

where W = weight of fuel discharged in pounds per minute,

C = a coefficient,

a = area of passage in square inches,

ρ = specific gravity of fuel discharged (referred to water at 60° F.)

h = head or pressure drop across the passage, expressed in inches of water.

The value of C, it is to be noted, includes all losses due to both skin friction and internal or fluid friction, as well as the loss incident to contraction of the stream through the passage, and to so-called end effects. These losses vary with change in head (h), with change in shape of entrance to the passage, with change in the ratio of length to diameter (L/D) of the passage, and with the temperature (T) of the fuel, considering any one fuel. The influence of change in the temperature upon the value of (C) is the result of the change in viscosity of the liquid with change in temperature. A rise in temperature is accompanied by a lowering of the viscosity and a consequent increase in the value of the relative fluidity.[2] Thus, considering different fuels discharged from the same passage at the same temperature, those having higher fluidity values will possess higher values for (C) in equation (1). Obviously those fuels having a higher rate of increase in fluidity with a given temperature rise will also have a higher rate of increase in the value of (C). In general, those fuels having smaller fluidities possess the

[1] This report was confidentially circulated during the war as Bureau of Standards Aeronautic Power Plants Report No. 44.

[2] The fluidity of a liquid is the reciprocal of its viscosity. Attention is called to plot 6, which is a plotting of fluidity against temperature for a considerable number of aviation engine fuels, taken from Bureau of Standards Technologic Paper No. 125, by Winslow H. Herschel.

greater rates of increase in fluidity value with a given rise in temperature. This is clearly shown in plot 6, from Herschel,[3] and explains why it is that the heavier the fuel the more variant is its discharge rate with temperature change.

The general effect of alteration of the shape of the passage entrance is shown[4] in plot 1. Here the diameter is constant, and the L/D and T substantially so, the only significant change being the breaking of the sharp, square edge to a depth of a few thousandths of an inch. Probably the major effect of this chamfering is to reduce the contraction of the stream in the entrance; at, in this case, heads above 2 inches of water. While the coefficient (C) has considerably higher values with increase of (h) with the entrance chamfered in this way, it will be noted also that its value varies through wider limits. This may or may not be desirable, depending upon surrounding conditions with respect to the air flow through the carburetor. However, chamfering has this very practical advantage in carburetor manufacture, that the angle and depth of the chamfer, within comparatively wide limits, have an almost negligible effect on the discharge; while, on the other hand, small departures from truth in the making of sharp square edges result in wide variations in the discharge. This, taken with the great difficulty of producing duplicate parts having square edges free from burr, practically rules out the square edge for carburetor metering passages.

In plot 1, as in all the others with the exception of plot 5, the discharges considered were obtained from passages having entrances chamfered as noted in plot 1. Furthermore, all runs were made with submerged passages, with the exception of two shown in plot 5. The two chief reasons for employing submerged passages are: The instability of the discharge under very small heads for passages discharging into air; and the fact that the jet discharging into air is rapidly becoming obsolete in carburetor practice.

Within the range of metering passage diameters used in general carburetor practice it is found that the value of (C) increases with increase of (D), plot 2.

The effect upon (C) and upon the limits between which it varies with change in the ratio L/D, are brought out in plots 3 and 4. In the former, (C) is plotted against (h) for several values of L/D, with (D) a constant. Plot 4 is another form of expression of these same points, with (C) plotted against L/D, each curve being representative of a constant value for (h).

The usefulness in practice of the control exercised over the values and range of values of (C) following control of the ratio L/D, is found when it is attempted to secure mixture ratio compensation of a definite order of variation, with a given range of controlling values for (h). These latter will vary with the forms given the air passages, and with the general design of the carburetor, as discussed in Parts III, IV, and V of this report. In general, there is more or less fitting by selection to be done in bringing about the desired compensation control in a carburetor; and plots 3 and 4 point out a very simple way to accomplish almost any desired result in compensation.

A change in temperature affects the discharge from a passage in two ways—through its influence on the density (ρ), and by virtue of the change in fluidity. It is obvious from a consideration of equation (1) that for ordinary variations in (T) the effect of the accompanying change in (ρ) is of no great consequence, since the change in (ρ) is comparatively small and the discharge varies as $\sqrt{\rho}$.

The group of three curves in plot 5, for gasoline discharged from the same passage at three temperatures, expresses the order of magnitude of the effect upon (C) of change in fluidity with the change in (T), for a comparatively long passage, in which this effect is much greater than in the case with ordinary smaller values for L/D found in carburetor practice.

[3] Herschel, Winslow H.: Bureau of Standards Technologic Paper No. 125.

[4] The experimental data on which this report is based is selected from the results obtained late in 1917 and early in 1918, at Detroit, by P. S. Tice in a special apparatus designed for the accurate study of discharges from small-bore passages. For convenience in reproduceability distilled water was the discharging fluid in the major portion of the work. The apparatus includes means for controlling and measuring the head within narrow limits (at a head of 1 inch the variations are less than plus or minus 0.5 per cent, and are correspondingly less at greater heads); means for controlling the temperature to within plus or minus 0.25° C. of the set value; a device for weighing the fluid discharged; an electrically controlled stop watch for taking the time, the circuit of which is completed upon the swinging of the balance.

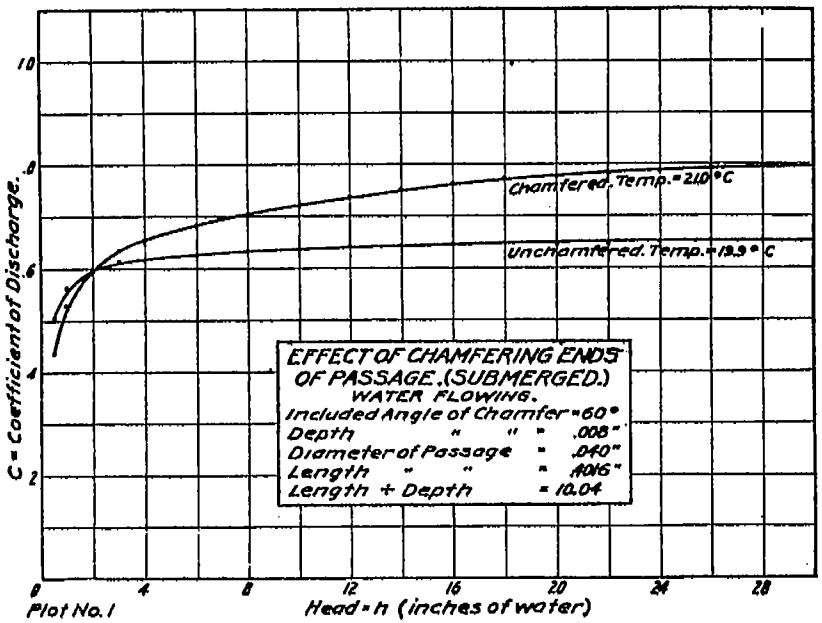

Plot No. 1

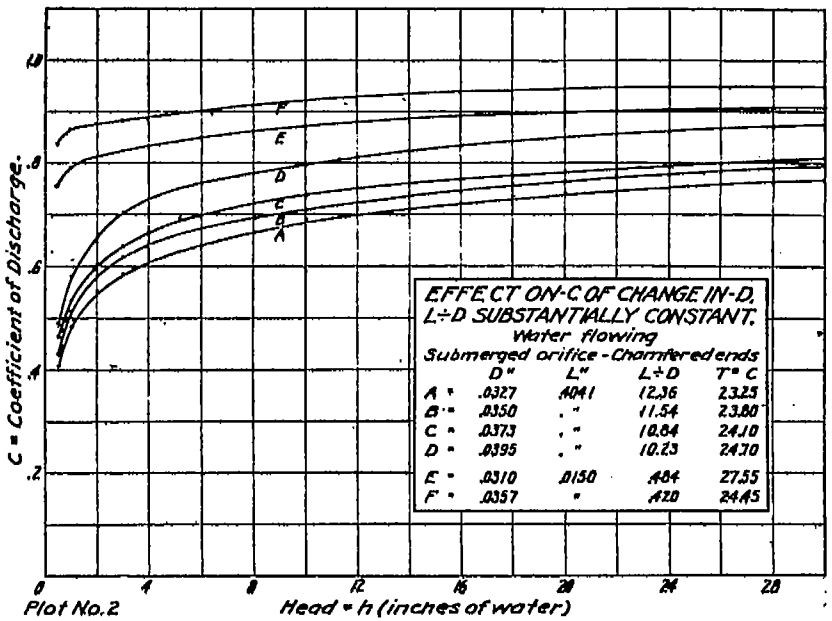

Plot No. 2

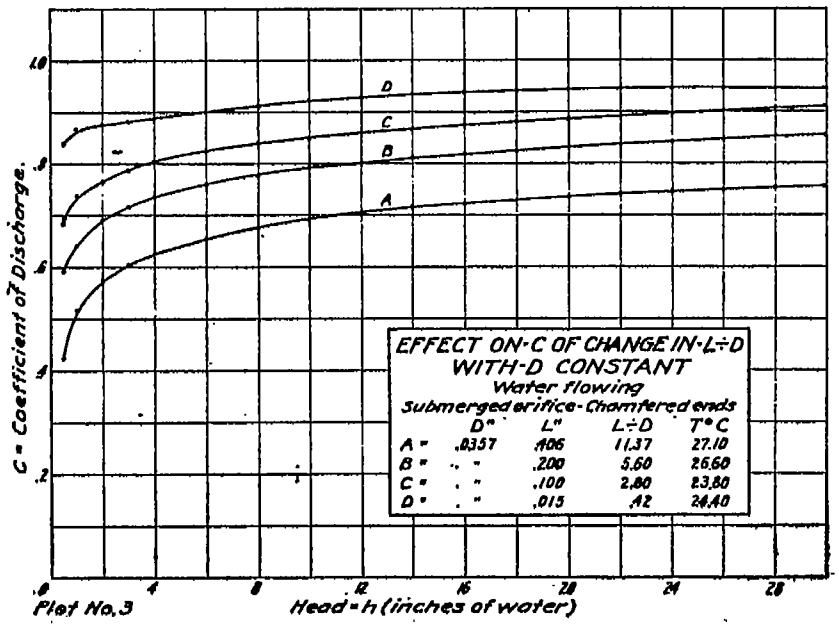

Plot No. 3

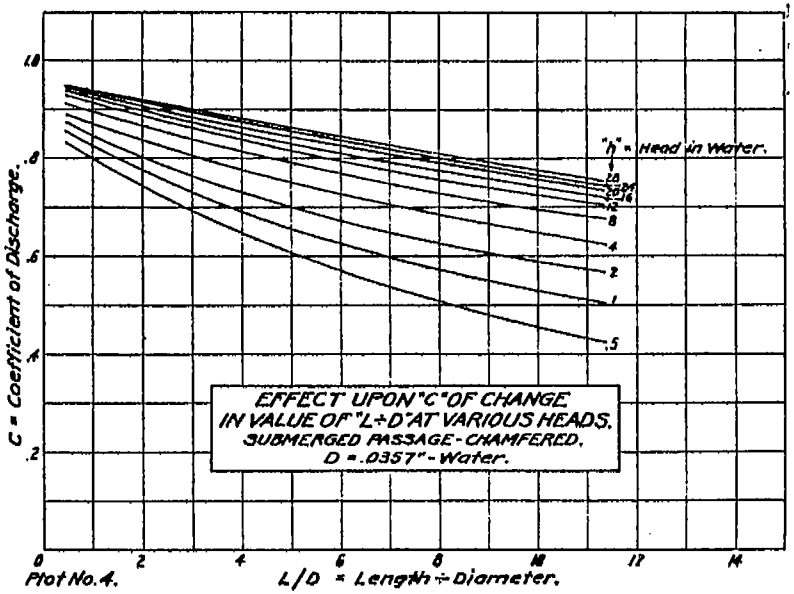

Plot No. 4.

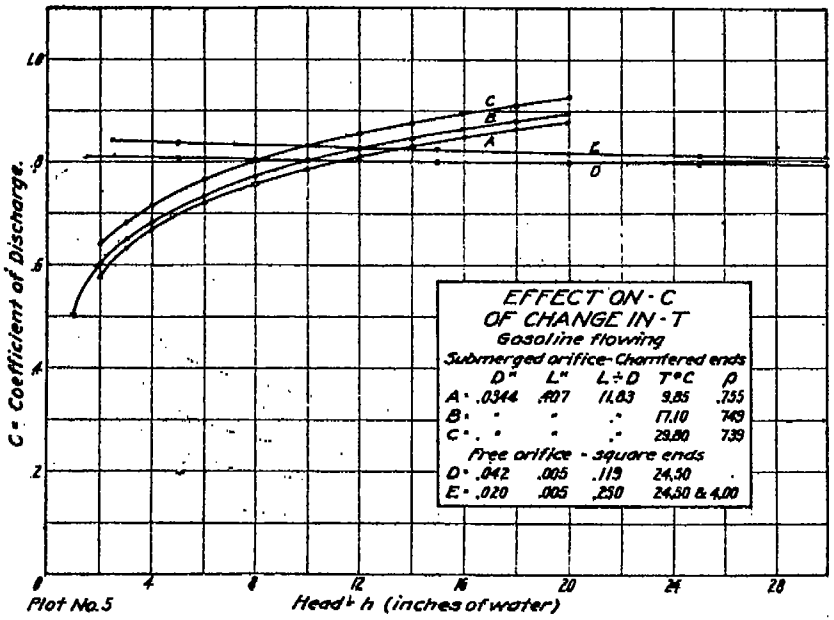

Plot No.5

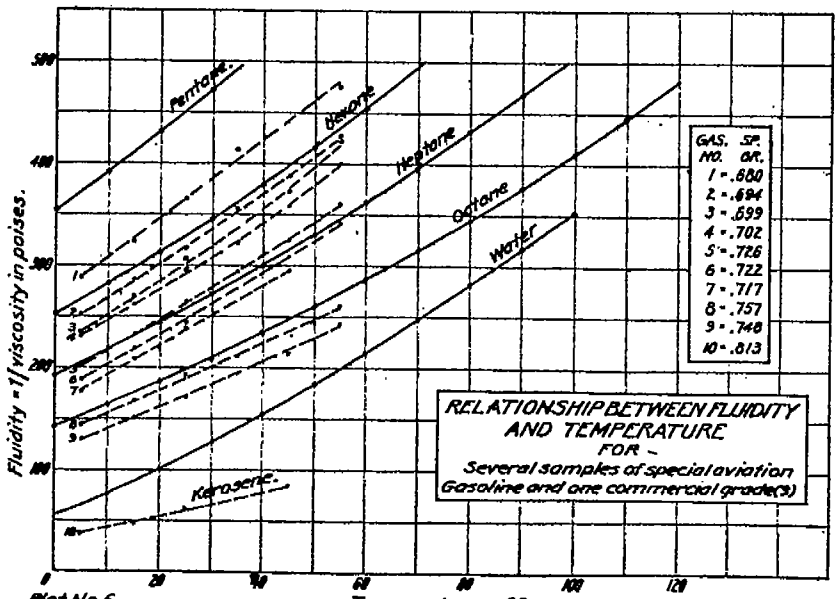

Plot No.6.

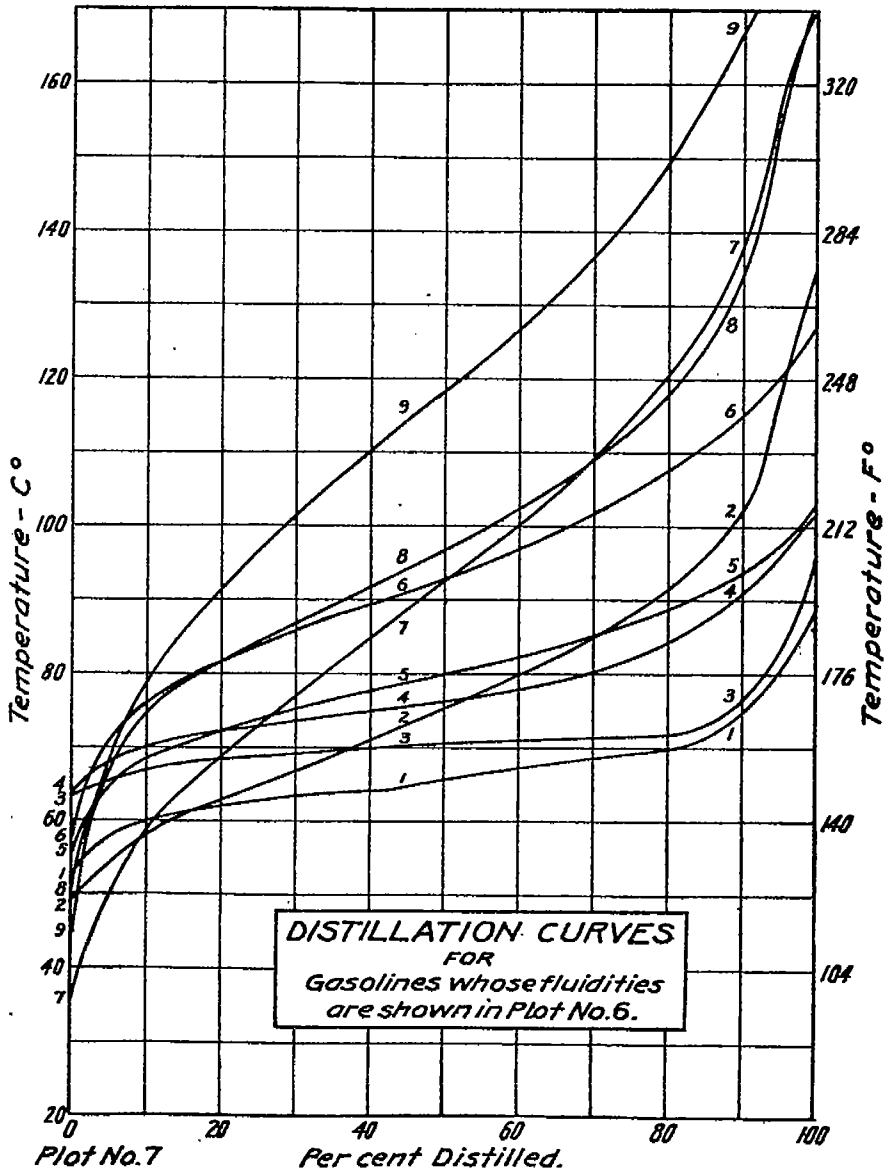

Plot No.7

Attention is called to the curves in plot 5 for the very short, square edged passages discharging into air. Here the variation in (C) is a minimum with respect to both (h) and (T). A change in (T) from 24.5° C. to 4° C., it will be seen, results in no appreciable change in (C) at any one value of (h).

CONCLUSIONS.

(1) Chamfering the entrance of a fuel metering passage increases both the value and the range of values for the coefficient (C) of discharge.

(2) Wide variations in the angle and depth of chamfer at entrance have almost inappreciable effect upon (C), with respect to both its value and range of values with change of head (h).

(3) Small variations, due to burr or otherwise, at entrance of square edge metering passages account for inadmissable irregularities in discharge. This makes it highly undesirable to employ this form of entrance where ready production of many identically performing parts is sought.

(4) Submerged fuel metering passages are free from instability and irregularity of discharge when the head (h) is very small.

(5) The value of the coefficient (C) of discharge increases with increase of diameter (D) of the passage, for passages of appreciable length.

(6) The value of the coefficient (C) of discharge increases, and its range of values decreases, with decrease in the length to diameter ratio (L/D).

(7) Suitable selection of the ratio L/D in a fuel metering passage permits of obtaining almost any useful relationship between air and fuel in a mixture, other conditions remaining substantially constant.

(8) The value of the coefficient (C) of discharge increases with the fluidity of the fuel, which varies with the temperature (T).

(9) The smaller the fluidity value of the fuel, at a given temperature, the greater the rate of increase of fluidity with rise of temperature, and therefore the greater the rate of increase of the coefficient (C) with rise in temperature.

(10) Increase in the ratio L/D serves to increase the effect upon the coefficient (C) of changes in fluidity following changes in temperature.

(11) The discharge from square edged orifices in thin plates ($L/D = 0.25$ or less) is inappreciably affected by wide variations in temperature of the fuel.

REPORT No. 49.

PART III.

CHARACTERISTICS OF AIR FLOW IN CARBURETORS.[1]

By Percival S. Tice.

RÉSUMÉ.

The following report is a discussion of experimentally determined values of the coefficient of discharge for the air passages, and of the loss in pressure at the carburetor outlet, in carburetors of the plain tube type. These values are considered, for the complete carburetor assembly, with respect to passage form, air density, the admission of fuel to the air stream, and method of spraying or dividing the liquid.

The more important conclusions reached are: That the coefficient of discharge has an almost constant value for throat velocities greater than about 145 feet per second, for any one carburetor; that below a throat velocity of 145 feet per second the coefficient rapidly becomes smaller; that considerable variations in passage form only slightly modify the coefficient; that the coefficient is practically unaltered by change in atmospheric density, or by admission of fuel to the air stream; and that the pressure loss through carburetors varies with the design of the passages, and with the method of admission and spraying of the fuel.

CHARACTERISTICS OF AIR FLOW IN CARBURETORS.

The flow of air in a plain tube carburetor (one having a single air passage without control other than the engine throttle valve) is most conveniently considered as flow through a nozzle having an infinite area (A_1) of entrance, and in which, therefore, the pressure at entrance (P_1) is that of the surrounding atmosphere. Carburetors of this type always include a constriction or throat in which the velocity of the air is increased to provide a drop in pressure to cause fuel to be ejected into the air stream. The throat area is the least area of section along the axis of the air passage. In such a case the weight of air taken through the carburetor may be written [2]

$$W=\frac{2.043CP_1A_2}{\sqrt{T_1}}\sqrt{\left(\frac{P_2}{P_1}\right)^{1.422}-\left(\frac{P_2}{P_1}\right)^{1.711}} \qquad (1)$$

where W = weight of air passing in pounds per second,
C = experimentally determined coefficient of discharge,
P_1 = pressure at entrance in pounds per square inch, absolute,
T_1 = temperature at entrance in F°, absolute,
A_2 = area of throat in square inches, and,
P_2 = pressure at the throat in pounds per square inch, absolute.

This is the general expression for air flow through a nozzle.

[1] This report was confidentially circulated during the war as Bureau of Standards Aeronautic Power Plants Report No. 45.

[2] The subject of air flow formulæ is very thoroughly considered by Sanford A. Moss in American Machinist, pp. 368 and 407, Sept. 20 and 27, 1906.

Published reports of tests of air flow through nozzles or Venturi tubes are few in number, unfortunately, and include only work with comparatively large tubes (2 inches or more throat diameter), having straight axes and without obstruction at throat or entrance. These tests have resulted in the assignment of throat coefficient values ranging from 0.94 to 0.99, for passages having equal entrance and exit diameters (D_1 and D_3, respectively) and a throat diameter (D_2) equal to or less than 0.5 D_1. In these tubes the converging entrance has been found to have an optimum included angle never greater than 30°, and is joined to the diverging portion by a short cylindrical section comprising the throat, and having well rounded junctions with each. Further, the diverging down-stream portion or adjutage is found to have an optimum included angle of between 5° and 7.5°.

The inclusion in a carburetor design of a passage possessing the above general specifications is obviously difficult if not impossible. A consideration of intake system requirements in an engine seems to preclude the employment of a diameter ratio of $D_2/D_3=0.5$ or less. A definite and narrow range of values for D_3 exists in a given case; and a reduction of throat area to 0.25 that of the manifold is inadmissible because of the requirements of high charge pumping capacity in an engine, and of maintenance of a fairly definite range of heads controlling the fuel discharge.

Considerations of space available for the carburetor, of the desirability of minimum bulk with universality of application of that device, of the frequent need for a supply of heated air, or of fire prevention, make it necessary to modify the entrance by curving its axis more or less abruptly, and make it highly desirable to increase the included angle of the adjutage. Then, too, fuel must be admitted to the throat to secure proper metering relations; and this calls for obstructions in the form of jets and their supporting bosses. A throttle valve must be included for engine control.

Taking these points all together, it is reasonably to be expected that the air flow in a carburetor will have a different and smaller efficiency figure or coefficient than obtains for the simple passage of optimum form.

The work, of which the following is a summary, was done in the Bureau of Standards carburetor testing plant,[3] and was undertaken to determine experimental values for the coefficient of discharge (C) in equation (1), for rather widely differing examples of carburetors of the plain tube form. The whole carburetor was employed in each case, as installed on the engine, the object being to determine effective values of the coefficient for the carburetor as a whole, rather than corresponding values for the throat member alone and removed from its service environment. These latter are, in general, fictitiously high referred to service conditions, as is shown in the results.

The carburetors used are referred to in the following as carburetor A,[4] figure 1, and carburetor B,[4] figure 2. The essential dimensions of the throat members of these two carburetors are given in the diagrams and data of figure 3, together with those for an air nozzle of approximately optimum form.

Carburetors A and B were designed for use on the same engine, in which three cylinders, 5-inch bore by 7-inch stroke, are supplied by each throat. The air taken by these cylinders at 1,700 r. p. m. under full throttle opening, at the several barometric pressures, is shown graphically in plot 4, in which are also shown the corresponding air densities at the mean temperature of the tests (62.8° F.), and the altitudes in feet equivalent to these densities.[5] The quantities of air read from the curve of plot 4 are the maxima taken through the carburetors in these tests; and the lesser quantities taken to complete the description of the coefficient variations were secured by throttling the air supply to the carburetor chamber. For convenience in manipulation, the carburetor throttles were kept fully opened throughout the tests, since it

[3] A fully illustrated description of the Bureau of Standards carburetor testing plant is given in Part I of this report.

[4] Carburetor A is the Zenith Carburetor Co.'s dual design used as equipment on large engines. It is fitted with a throat member having a minimum bore of 31 mm. (1.22 inches), and is compensated, as are all Zenith carburetors, by compounding the nozzles.

Carburetor B is an experimental design by the Stewart-Warner Speedometer Corporation, developed to possess inherent mixture compensation for altitude. It has a throat of 1.312 inches minimum bore, and is compensated by balancing the float chamber pressure against that at the throat outlet.

NOTE.—It was intended to include other carburetors in this portion of the work, but owing to structural and design peculiarities in those others that were available it was impossible to obtain for them coefficient values directly comparable with those for the simpler structures here described.

[5] A complete discussion with curves giving the relations of pressure, temperature, and density with altitude forms a portion of Part V of this report.

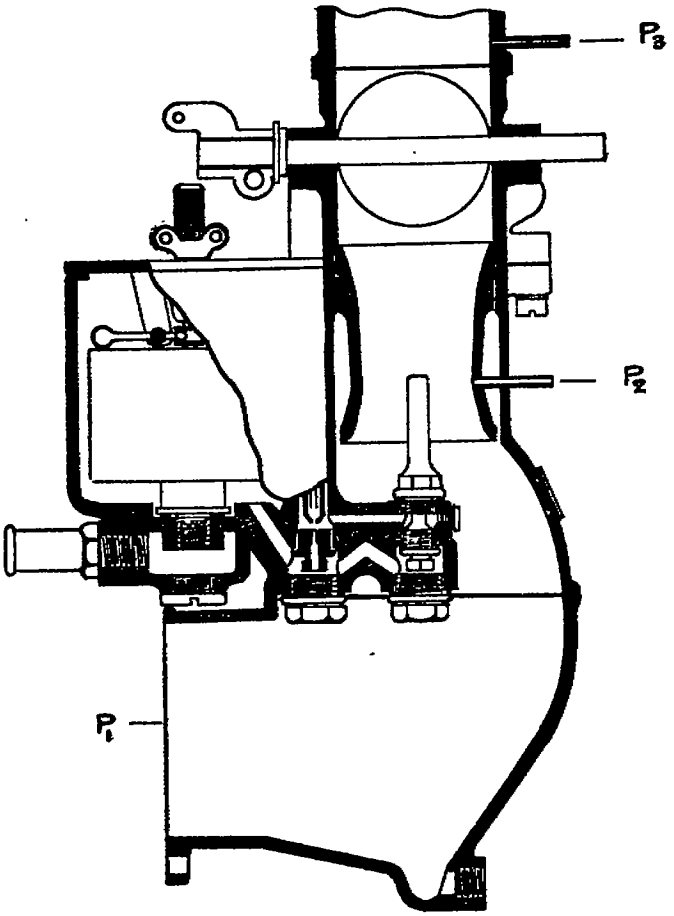

Fig. 1.

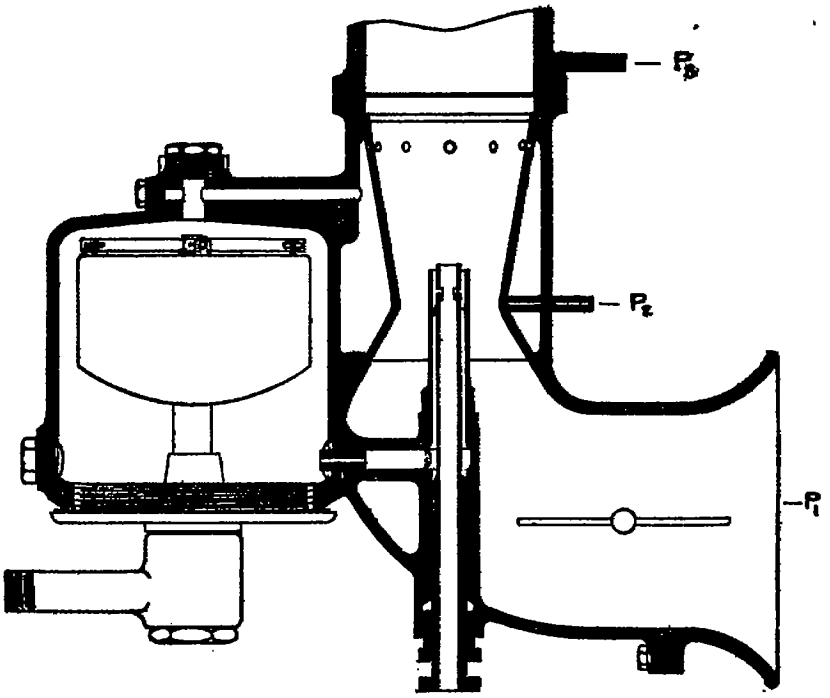

Fig. 2.

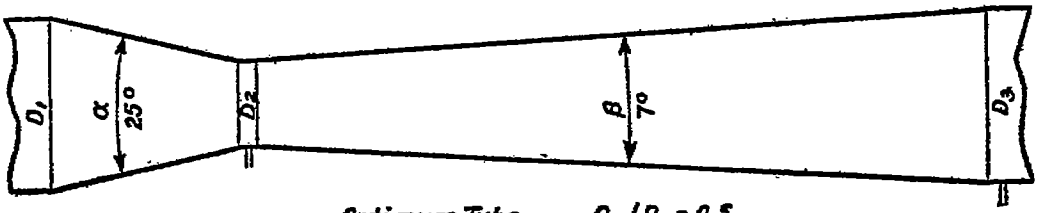

Optimum Tube $D_2/D_3 = 0.5$

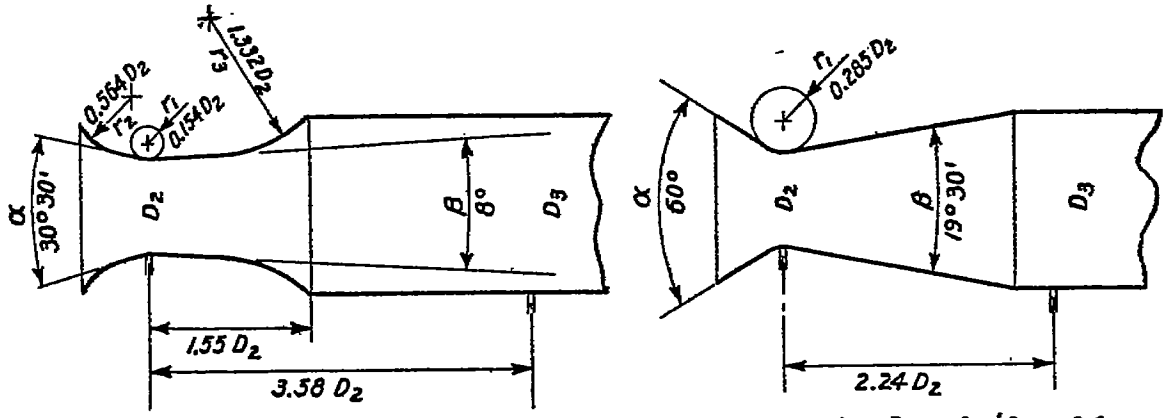

Carburetor A $D_2/D_3 = 0.6$ Carburetor B $D_2/D_3 = 0.6$

Carburetor Air Nozzle Forms.

Fig 3

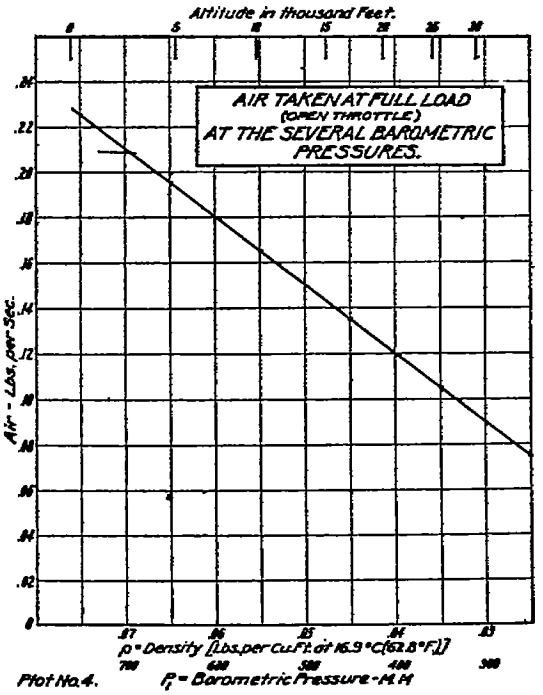

Plot No. 4.

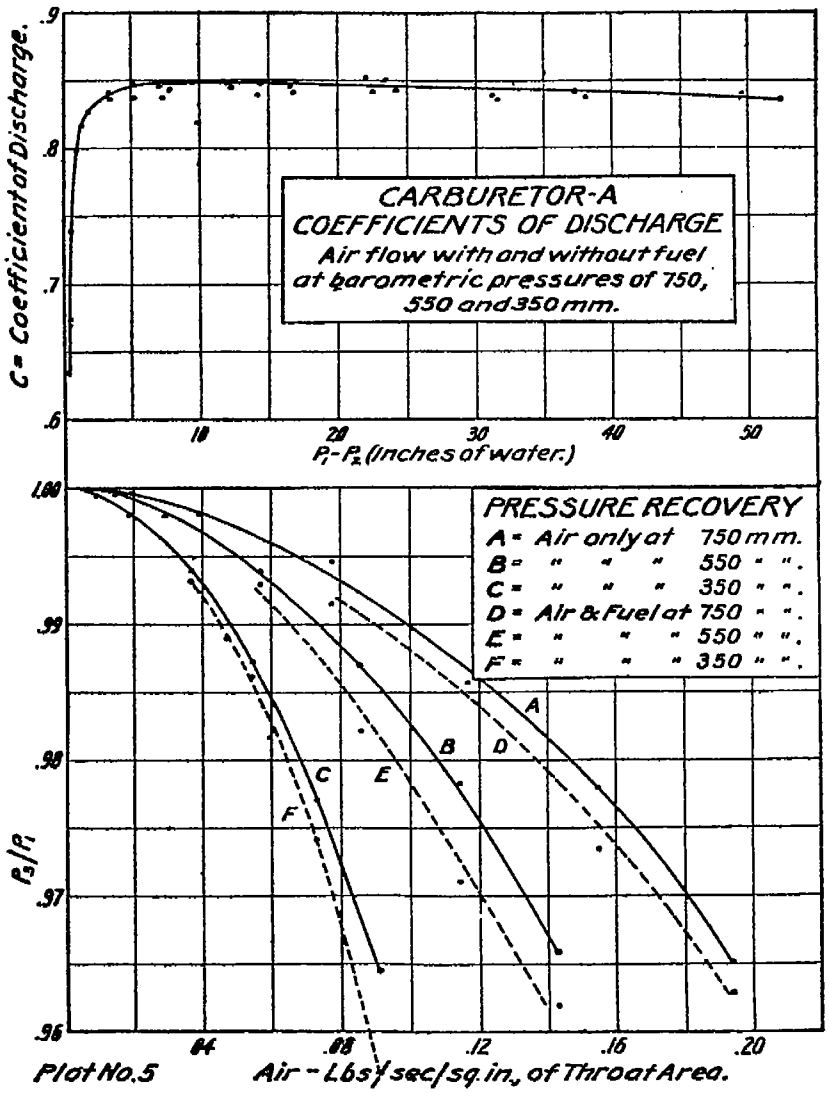

Plot No.5

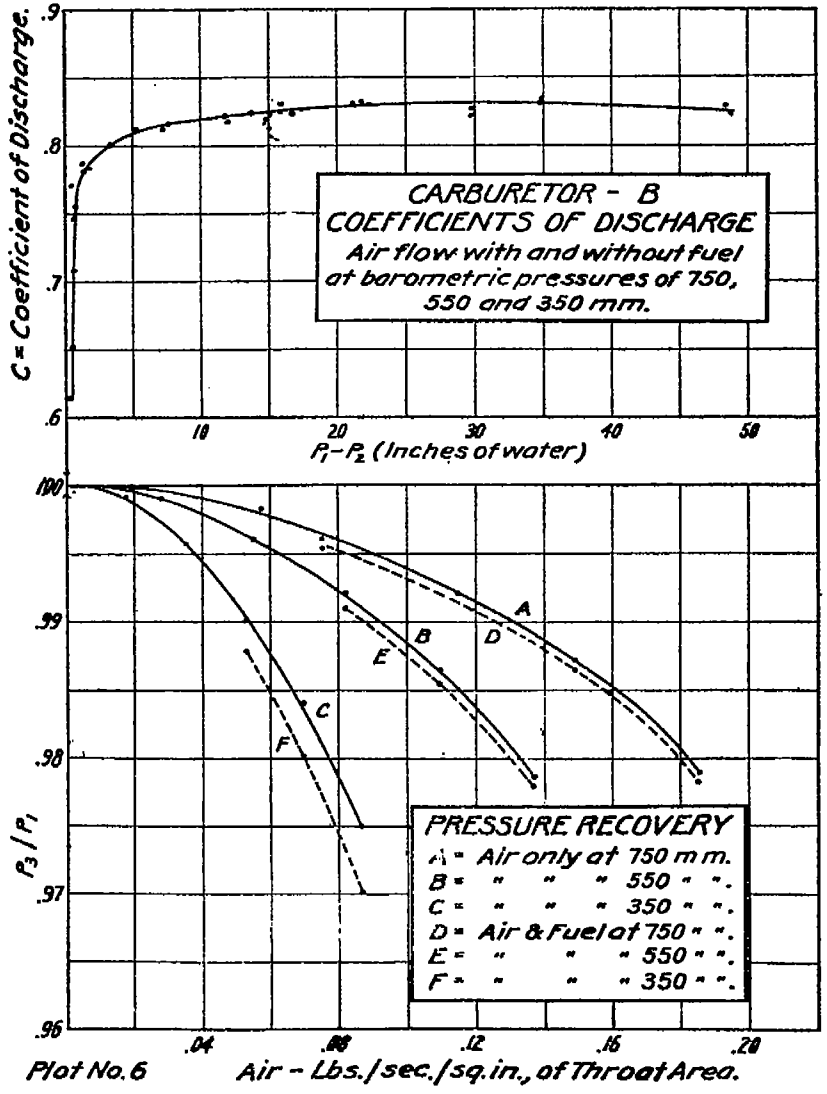

Plot No.6

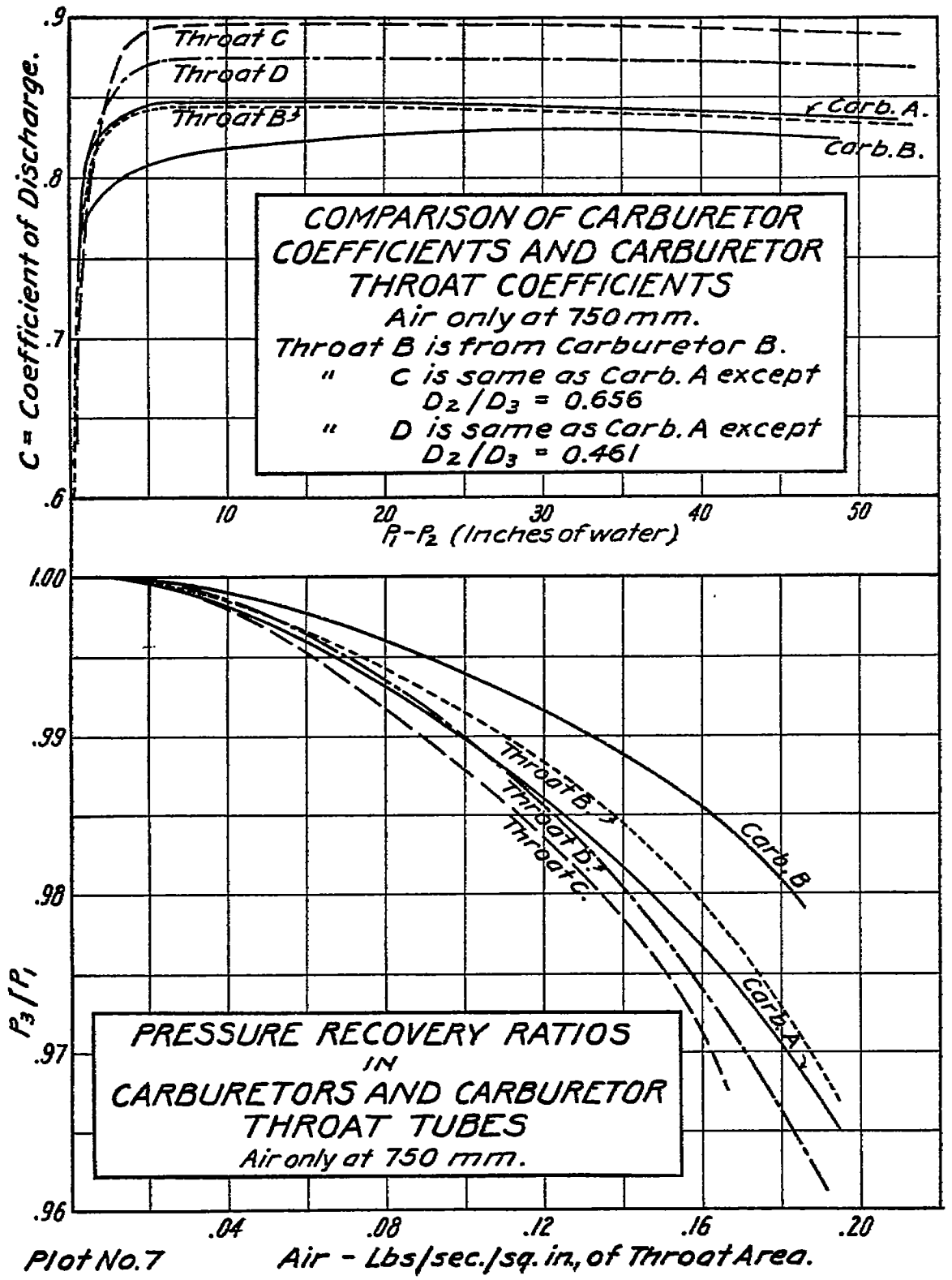
Throat C
Throat D
Throat B
Carb. A.
Carb. B.
COMPARISON OF CARBURETOR COEFFICIENTS AND CARBURETOR THROAT COEFFICIENTS
Air only at 750 mm.
Throat B is from Carburetor B.
" C is same as Carb. A except D2/D3 = 0.656
" D is same as Carb. A except D2/D3 = 0.461
C = Coefficient of Discharge.
.9
.8
.7
.6
10
20
30
40
50
P1-P2 (Inches of water)
1.00
.99
.98
.97
.96
P3/P1
Throat B
Throat D
Throat C
Carb. B
Carb. A
PRESSURE RECOVERY RATIOS IN CARBURETORS AND CARBURETOR THROAT TUBES
Air only at 750 mm.
.04
.08
.12
.16
.20
Air - Lbs/sec./sq. in. of Throat Area.

Plot No. 7

had been determined in preliminary work that reduction of air flow by throttle closure had no measurable effect upon the coefficient value, as compared with reduction of air flow following manipulation of the pump of the plant.

Pressures were read in the carburetor chamber of the testing plant, at the narrowest portion of the throat, and in the outlet passage a short distance above the carburetor attaching flange, as shown in figures 1 and 2; and the temperature of the air entering the carburetor was also read. The tests were carried out at barometric pressures of 750, 550, and 350 mm. of mercury, giving atmospheric densities corresponding to altitudes above the earth's surface of 200 feet, 10,250 feet, and 25,800 feet, respectively.

More fully to describe the performance, runs were made both with and without fuel discharging from the carburetor nozzles, under the several rates of air flow described above. This permitted a determination of the effects of entraining the fuel of the mixture in the air stream. The results of the observations are shown in plot 5 and those following it.

Of the two coefficient curves, plots 5 and 6, that for carburetor A possesses higher values throughout, neglecting those for depressions of less than 1 inch of water. Also, there is less falling off in the coefficient for differences of pressure less than about 20 inches of water. The effect upon the coefficient of discharging fuel into the air stream is practically negligible in both cases and is represented by small irregularities. A further point is the practical identicality of the coefficient values accompanying given throat pressure drops, for the several air densities included.

A consideration of the results, together with the passage forms in the two carburetors, shows that only small variations in the coefficient values are to be expected within the limits of form that may be designated as reasonably good. In the present two cases the differences at maximum air flows are quite small, being 1.1 per cent at 750 mm. pressure, 1.2 per cent at 550, and 1.3 per cent at 350 mm. All other conditions in aircraft service include throttle closure, and the throat performance then ceases to be a controlling factor, except in so far as it has a bearing on the mixture ratio.

The coefficient curves of plots 5 and 6 are directly compared with like curves for carburetor throat members alone, in plot 7. The carburetor curves are lower in value, but show no important change in characteristic, as a result of inclusion of jets (with their bosses) and of the carburetor entrance passages.

Of equal interest with the coefficient values is a study of the pressures in the carburetor outlet. It is clear that the output of an engine is a direct function of this pressure, hence it is important to have its value as great as possible under the condition of open throttle.

A drop in pressure at the carburetor outlet, compared with the pressure at entrance, results chiefly from skin friction and internal or fluid friction in the air stream. The latter loss is augmented by turbulence, and this last is much increased in a passage by the introduction of bends, jets with protruding supporting bosses, the discharge of fuel, throttle valves, and the like. Therefore, for a given outlet area, the pressure at outlet (P_2) will be chiefly inversely functional with the rates of motion in the stream, and since the coefficient value for a tube depends mainly upon its dimensional relationships, it is not necessarily the case that a high (C) value be accompanied by a correspondingly high value of (P_2).

The curves in the lower portions of plots 5, 6 and 7 give the outlet pressure expressed as a percentage of that at entrance (P_2/P_1), for carburetors A and B and the several separate throat tubes examined.

Referring to plot 7, it appears that the curves for the throats C and D are very closely related when compared on the basis of equal mass flow per unit area, in spite of the considerable discrepancy in their area relationships (A_2/A_3), being 0.430 for tube C and 0.212 for tube D. Considering these throats as applied to the same engine and passing the same quantity of air in unit time, the tube D is distinctly inferior to tube C with respect to the recovery of pressure at outlet.

The curve for carburetor A, plot 7, having a tube of the same general form as throats C and D, and with (A_3/A_2) equal to 0.360, is superior at high specific rates of discharge, even though it includes a jet, bosses, a curved axis of entrance, and a throttle valve. It may be that tube A possesses more nearly the optimum dimensions, considering its form, for the conditions than either tube C or D; but this is not likely, considering the whole data from this work. Since mere change in the area relationship has only a very small effect upon (P_3) at a given specific discharge, and since for a given specific discharge the skin friction in like passages will be substantially constant, it seems probable that the increase in (P_3) in carburetor A, compared with tubes C and D at high specific discharges, is accounted for on the ground of a suppression of turbulence in the stream.

In carburetor A there are two jets, one within the other, and from the annular passage thus formed is discharged a column of air. The effect of such a cloumn of air issuing into the throat parallel with the general line of flow, will be to suppress eddying in the wake of the nozzle and its boss, and thus accomplish a rise in pressure in the air stream. Since at large throat pressures small volumes of air will pass through the nozzle, the suppression of turbulence by the nozzle air column will be smaller than at low throat pressures, corresponding to high rates of discharge.

Continuing with plot 7 and considering the curves for carburetor B and its throat, the immediately foregoing statements are seen to be supported very fully, since in this case the column of air admitted by the nozzle has several times the cross-sectional area of that in carburetor A. This is included in the carburetor design for the primary purpose of assisting in securing a fine division or spraying of the fuel.

In the observations on the throats alone, no air was admitted as by the nozzles. The greater values of the curve for throat B, compared with those for tubes C and D, is explained in great measure by the more favorable adjutage form, with respect to the maintenance of line flow.

The foregoing on the effect of inclusion in a carburetor design of a column of air discharging from the nozzle is further illustrated by the outlet pressure curves for carburetors A and B, plots 5 and 6. The increase in (P_3) for carburetor B as compared with carburetor A is greatest at the greatest atmospheric pressure, and becomes less as the pressure is reduced.

Admission of fuel to the air stream in all cases causes the value of (P_3) to suffer a loss, plots 5 and 6. It is pointed out that this is functional with both the quantity of fuel and with the mode of spraying. It seems that the latter is, in general, of the greater consequence, and that utilization of a column of air of appreciable sectional area in the nozzle, to assist division of the liquid, improves the efficiency of the spraying device with respect to the amount of energy used in accomplishing the spraying.

CONCLUSIONS.

(1) The coefficient of discharge for any one of the carburetor passages tested has an almost constant and maximum value for effective throat velocities greater than about 150 feet per second.

(2) The value for the coefficient of discharge for the carburetor passages tested lies between 0.82 and 0.85, under service conditions. These valves are probably typical of reasonably well formed passages of similar type.

(3) The coefficient of discharge for carburetor passages of this type is apparently only slightly modified as a result of considerable changes in passage form, with respect to angles of entrance and adjutage.

(4) The coefficient of discharge for a carburetor passage is practically unaffected by wide variations in atmospheric density (less than 1 per cent maximum variation between the density limits of 0.075 and 0.035 pounds per cubic foot).

(5) The coefficient of discharge for a carburetor passage is practically unaffected by the introduction of fuel to the air stream (fuel discharge introduces irregularities not to exceed plus or minus 1 per cent).

(6) The pressure loss in the carburetor outlet changes with the turbulence or internal motion of the air stream.

(7) The pressure loss in the carburetor outlet changes with the quantity of fuel admitted to the air stream, and with the method of dividing the fuel by spraying.

REPORT No. 49.

PART IV.

EFFECTS OF PULSATING AIR FLOW IN CARBURETORS.[1]

By Percival S. Tice and H. C. Dickinson.

RÉSUMÉ.

The following report is offered as an indication of the order of magnitude of the variations in fuel metering and in effective carburetor capacity resulting from modifications of both the period and amplitude of the intake system pulsations. Experimental results with two carburetors possessing widely differing metering structures are briefly discussed.

As a result of the work done, it is concluded: (1) The effect upon carburetor capacity of usual rates and amplitudes of intake pulsations is so small as to be practically negligible; and (2) the metering is affected sufficiently to warrant that pulsation rate and amplitude be taken into account in developing the fitting of a carburetor to an engine.

EFFECTS OF PULSATING AIR FLOW IN CARBURETOR.

In aircraft service it is the accepted rule that not more than four engine cylinders be supplied with mixture by a single carburetor. The usual arrangements are: A single carburetor for engines having 4 cylinders or less, 2 carburetors symmetrically disposed for 6 and 8 cylinder engines, and 4 carburetors, also symmetrically disposed for engines of 12 and 16 cylinders. Each carburetor supplies either 3 or 4 cylinders.

It may be taken that such a carburetor disposal has come to be the accepted one because with it the engine volumetric efficiency is slightly higher than where a carburetor is made to serve a greater number of cylinders. The demand of one cylinder is not overlapped by that of another, in the carburetor and manifolding, with such an arrangement; and, in all probability, in the present state of manifold design, charge distribution is also somewhat simplified. But aside from the results experienced with respect to volumetric efficiency, or with respect to qualitative or quantitative charge distribution, it is worthy of note that both the period and amplitude of the pressure fluctuations in the intake system are made greater than in the case where more cylinders are served by a carburetor. The pressure fluctuations or pulsations in the intake passages have an interesting bearing on the metering performance of the carburetor.

At the outset it must be stated that no generally applicable analysis of the effects of pulsating flow in a carburetor is possible, since each combination of carburetor-intake piping and engine cylinders constitutes a separate and special case.

The following matter, based upon the results of a small group of observations in the Bureau of Standards carburetor testing plant, is offered as an indication of the order of magnitude of the variations in fuel metering and in effective carburetor capacity resulting from modification of both the period and amplitude of the intake pulsations. The experimental results apply only to the case of a given short length (15 inches) of straight pipe serving as the carburetor outflow passage, between the carburetor flange and the pulsator spindle.

Manifold branchings between the several cylinders of an engine and the common carburetor outflow passages have an important bearing on the nature of the pulsations in the latter and

[1] This report was confidentially circulated during the war as Bureau of Standards Aeronautic Power Plants Report No. 46.

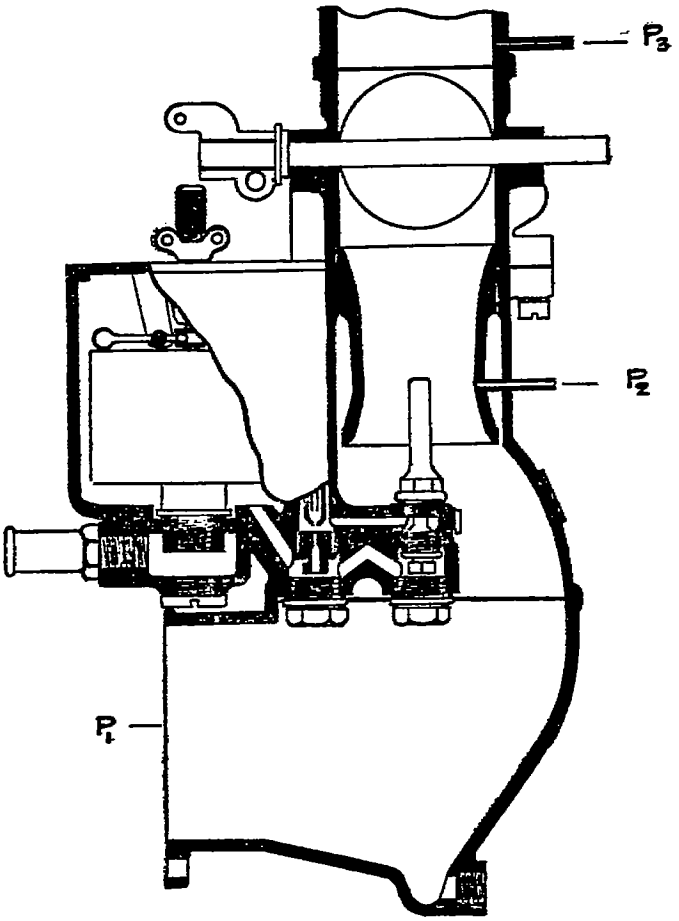

Fig. 1.

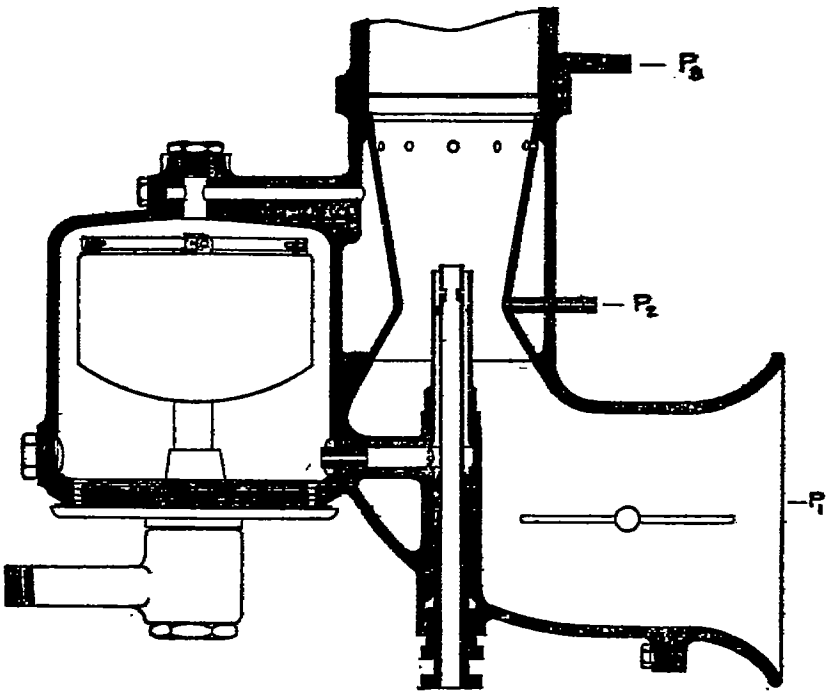

Fig. 2.

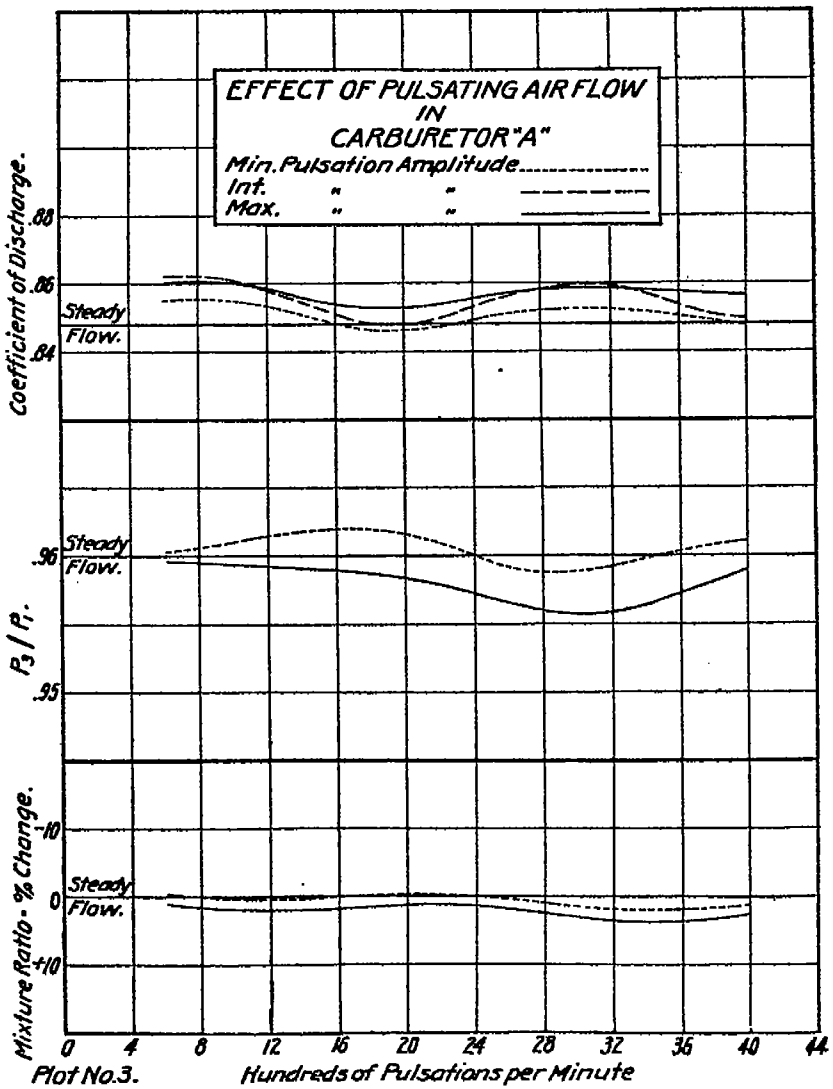

Plot No.3.

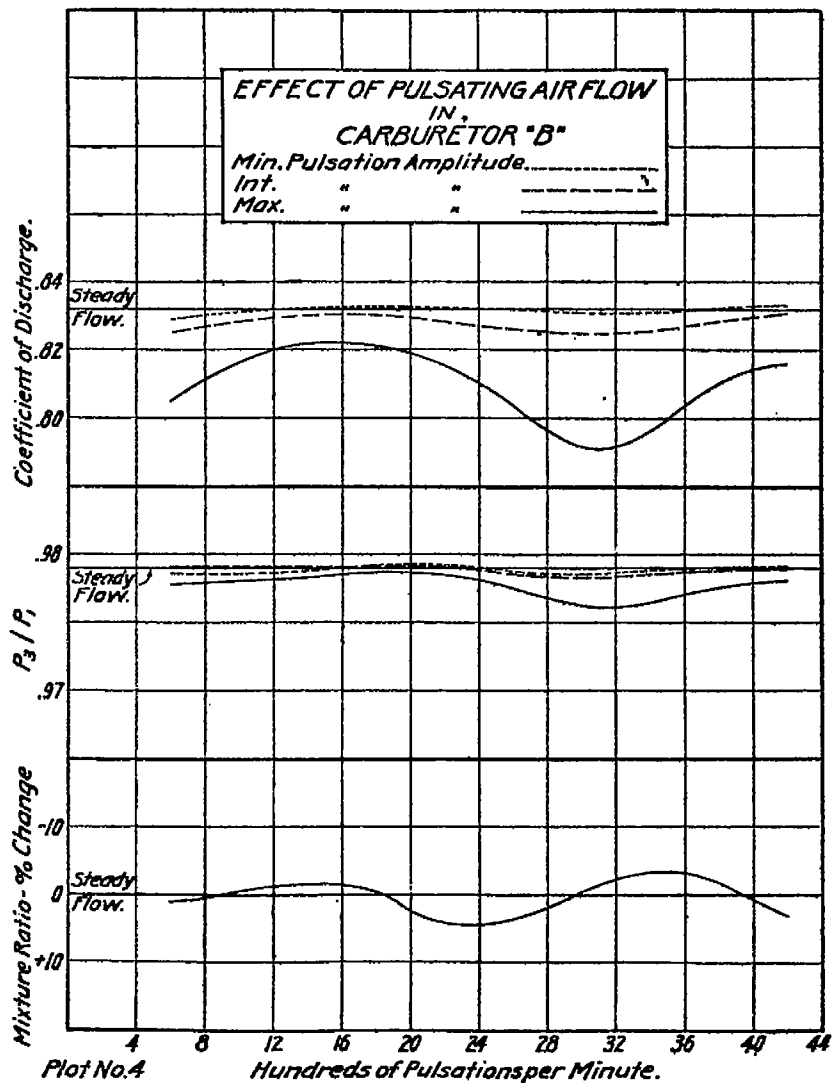

Plot No.4

in the carburetor. Opportunity has not as yet presented itself for an experimental study of this phase of the problem; but special apparatus in which the work can be done is now contemplated, and it is hoped to report on the whole subject, and in considerable detail at some future date.

Owing to the arrangement of the carburetor testing apparatus in which the present work was done, pulsations occurred in the air-metering orifice with carburetor chamber pressures greater than 580 mm. of barometer column. Since it is essential that the air meter be undisturbed, the runs here recorded were made with the chamber throttled to 500 mm., this being sufficient throttling to insure steady flow through the metering orifice.

Two carburetors, A and B (figs. 1 and 2), were run under the condition of full load at an atmospheric pressure of 500 mm. Reference runs were made with steady flow in each case. Pulsating flows, ranging in period from 600 to 4,200 per minute, were then induced, with the same weight of air passing in unit time; and observations of pressures and mixture ratio were obtained for each increment of pulsation rate. Three amplitudes of pulsation were included: The minimum possible with the apparatus, an intermediate value, and the maximum possible. Both carburetors were operated under identical conditions of both period and amplitude of the pulsations.

The observations of chamber, throat and outlet pressures result in the curves of coefficients of discharge and of pressure recovery ratios (P_3/P_1) in plots 3 and 4; and observations of the fuel discharge permit a like statement of the effects of pulsations upon the metering or charge proportioning.

At the time this work was done, it was impossible to record the amplitudes of the pulsations. However, it may be taken that the minimum amplitude used was a reasonably close approach to the condition of a single carburetor supplying eight or more cylinders, while the maximum amplitude approached that experienced when a single carburetor supplies only three cylinders, whose pumping strokes are disposed symmetrically.

In discussion of the curves of plots 3 and 4 it should be pointed out that those of the coefficients of discharge are of no great significance as a measure of carburetor capacity. They have an important bearing, however, on the metering, and on the case where the carburetor throat is being utilized as an air meter, as is sometimes done in experimental and development work.

It may be taken that the curves of pressure recovery ratio (P_3/P_1) more nearly describe the changes in effective capacity with change in period and amplitude of the pulsations. In each of the carburetors, it will be noted, the period or pulsation rate is of greater importance than is the amplitude or pressure variation. In the set-up used, the maximum deviation occurs in both cases at a pulsation rate of about 3,100 per minute. The curves approximate the sine wave in form, as a result of resonance effects in the passages.

In any case, within the limits of the work, the maximum variation in effective capacity as a result of pulsating flow, is of the order of one-half of 1 per cent.

As would be expected, the metering is somewhat more importantly affected, depending upon the interrelation of parts and passages controlling it. Thus, in carburetor A, where only changes in throat pressure effect the fuel flow, the metering is only little disturbed, and that consistently with the change in apparent throat coefficient. In carburetor B, on the other hand, where both the throat and the float chamber pressure are subject to separate modification by the pulsations, the result is quite different. The mean value of the mixture ratio over a considerable range of period is that found under steady flow conditions. But the ratio varies harmonically through fairly wide limits as the pulsation period is changed.

In conclusion it can be stated, in the light of the little work done, that (1) the effect upon carburetor capacity of used rates and amplitudes of pulsation is so small as to be practically negligible, and that (2) the metering is affected sufficiently to warrant that pulsation rate and amplitude be taken into account in developing a fitting of a carburetor to an engine. In final word, the amplitude of pressure pulsation is reduced to negligibility upon throttling to between 0.5 and 0.6 of the full-load air capacity in a carburetor.

REPORT No. 49.

PART V.

NATURAL AND REQUIRED METERING CHARACTERISTICS OF CARBURETORS.[1]

By Percival S. Tice.

RÉSUMÉ.

The following report is a discussion of the theoretical and experimental mixture proportioning characteristics of carburetors as applied to the conditions of aircraft service; and chiefly considers the weight relationship of air to fuel in the mixture with respect to varying atmospheric pressure and temperature. Since a statement of carburetor performance is of little value in the absence of a corresponding statement of what is required, it has seemed advisable to group carburetor performance with engine requirements, and consider the two together. It is thought that the present treatment of these two really distinct matters is fully justified in the absence of any prior definition of what constitutes the optimum performance of a carburetor.

The experimental work on which the report is based includes investigations of aircraft engines and their requirements and of five carburetors, between the limits of mean annual pressure at ground level and that corresponding approximately to 30,000 feet altitude. Compensation characteristics of three of the carburetors are studied in detail, at each of several atmospheric pressures, at all loads under throttle between full load and one-tenth load, corresponding to idling of the engine.

A new type of carburetor possessing almost complete inherent altimetric compensation is included and its performance analyzed.

With respect to engine requirements, the more important conclusions reached are: (1) The mixture ratio for maximum power is practically a constant (at about 15 for the gasoline) at all air densities; (2) the optimum mixture ratio, considered from the standpoint of maximum fuel economy, is not constant, but decreases with the atmospheric density; and (3) the optimum mixture must be increasingly richer in fuel at part loads under throttle than under full throttle.

With respect to natural carburetor performance, it is concluded: (1) The ordinarily employed variations in structure and in method of fuel control in carburetors effect inappreciable modifications of the altimetric compensation; (2) the ordinarily employed variations in carburetor structure and in method of fuel control very materially modify the mixture ratio with load change under throttle; and (3) a plain-tube carburetor without moving parts controlling the fuel discharge can be made to give a working approximation to complete altimetric correction of the mixture.

NATURAL METERING CHARACTERISTICS.

In aircraft service the outstanding causes of variation in mixture proportioning in carburetors are change in atmospheric pressure, change in atmospheric temperature, and change in load. It must be pointed out that the direction and extent of the variation with load depends upon the design of the carburetor, and is capable of control independently of the atmospheric pressure or temperature.

Referred to altitude in feet above the earth's surface, the curves of plot 1 give the mean annual pressures and temperatures for the United States, from observations by the United States Weather Bureau. The density curve of plot 1 is computed from the values of the curves

[1] This report was confidentially circulated during the war as Bureau of Standards Aeronautic Power Plants Report No. 47.

of pressure and temperature ($\mathrm{P}=2.700\ P/T$). Obviously, during any one day or in the course of any one flight, observed pressures and temperatures may be widely variant from those given, and may not have the same variation with altitude as here shown, owing to local meteorological conditions.

The following notation is used throughout this report:

W=weight of air pumped in pounds per second.
w=weight of fuel discharged in pounds per second.
N=engine r. p. m.
V=velocity of air in feet per second.
P=atmospheric density in pounds per cubic foot.
P=atmospheric pressure in pounds per square inch, absolute.
T=atmospheric temperature in F° absolute.
$R=W/w$=ratio of air to fuel in the mixture.
subscript $_0$=values of the above at ground level.
subscript $_x$=values of the above at an altitude above ground level.

NATURAL ALTIMETRIC COMPENSATION.

In the operation of an engine under open throttle, the weight of air charge pumped varies directly with the speed of rotation and with the atmospheric density, $W \propto N\mathrm{P}$. Other things being equal, the indicated power developed varies directly with the weight of air pumped. The air taken at an altitude $_x$, in terms of that taken at zero altitude$_0$, is expressed

$$W_x = W_0 \frac{N_x\ \mathrm{P}_x}{N_0 \mathrm{P}_0} = W_0 \frac{N_x P_x T_0}{N_0 P_0 T_x}$$

Since it is required, for the development of maximum power[2] (plot 3), that the mixture ratio be maintained at a constant value for all air densities, the desirable fuel discharge characteristic in a carburetor is written

$$w_x = w_0 \frac{N_x\ \mathrm{P}_x}{N_0\ \mathrm{P}_0} = w_0 \frac{N_x P_x T_0}{N_0 P_0 T_x}$$

But the discharge of fuel from a carburetor metering port is proportional to $\sqrt{NP}$ under open throttle,[3] hence the natural discharge, without control devices, at an altitude $_x$ is represented by

$$w_x = w_0 \sqrt{\frac{N_x P_x}{N_0 P_0}}$$

where change in the fuel temperature has a negligible effect on the discharge from the metering passage, as in an orifice in a thin plate.[4]

The result is an increased fuel content in the mixture with reduced atmospheric pressure; and the enrichment at an altitude $_x$ is given by

$$\frac{R_0}{\mathrm{R}_x} - 1 = \frac{W_0 w_x}{w_0 W_x} - 1 = \sqrt{\frac{N_0\ \mathrm{P}_0 T_x}{N_x\ \mathrm{P}_x T_0}} - 1 = \frac{T_x}{T_0}\sqrt{\frac{N_0 P_0}{N_x P_x}} - 1$$

This natural enrichment is plotted against atmospheric density in pounds per cubic foot in plot 2, for the case of constant temperature ($T_x = T_0$), and for that in which both pressure and temperature vary as in plot 1. For the sake of simplicity and because the value of $\sqrt{N_0/N_x}$ is always very nearly unity (not exceeding about 1.06 for the ordinary ranges of density change usual in flight), this term is neglected in the plottings. Plot 2 also includes curves of R for the two cases, assuming a value of 20 at the ground. (For reasons for selection of this value, see the following on specific consumption.)

[2] The curves in the upper portion of plot 3 are from results obtained with an Hispano-Suiza 150-horsepower engine in the Bureau of Standards altitude laboratory. Several carburetors, quite different among themselves, were included in the tests and are represented in the curves.

[3] For any value of the relative load, as at open throttle, $W/P = V$=a constant; hence P_2/P=a constant(where P_2 is the carburetor throat pressure) and the metering head, $P-P_2$, is proportional to P_x. The quantity of fuel discharged thus varies as $\sqrt{P_x}$. But $\sqrt{P-P_2}$ is directly as the velocity, which is also directly as the engine speed, N_x. Therefore, the fuel discharge will be proportional to $\sqrt{\mathrm{NP}_x}$.

[4] See Part II of this report for a brief summary of the effects of fuel viscosity change with temperature change.

Considering ordinary carburetor mountings on aircraft, it appears that the carburetor air supply will always be at a temperature somewhat above that of the atmosphere. In fact, in many cases, the change in carburetor air temperature will be relatively small throughout a flight, even though great altitudes are attained. Thus it may be taken that the curves of plot 2 for a constant carburetor air temperature more nearly describe the enrichment rates to be expected in service than do those where the carburetor air temperature is that of the atmosphere.

FUEL VISCOSITY.

In further discussion of plot 2, it should be pointed out that a carburetor may have a fuel metering orifice the discharge from which is considerably affected by change in the viscosity of the fuel with temperature change. So great is the viscosity control of the discharge for large length to diameter ratios in the jet, that it is possible to select a jet proportion which will largely correct the mixture ratio under the variations in temperature of plot 1. But since the adventitious changes in temperature of the atmosphere during any flight are not necessarily orderly, and do not necessarily follow the annual mean of plot 1, such correction can not be relied upon. The daily or even hourly temperature variation at any one level may be as much as 50 per cent of the total variation of the annual mean between ground and 15,000 feet altitude.

However, mixture ratio variations with fuel viscosity change[4] must be considered in aircraft carburetor performance if the carburetor is subjected to considerable temperature variations, since the development of load compensation in carburetors almost always includes jet modifications in which the viscosity effect is not inappreciable.

FUEL CONSUMPTION AND POWER.

In the B. M. E. P.—mixture ratio diagram of plot 3 appears the ratio curve of plot 2 for $T_x = T_0$; and below are given B. M. E. P. vs. density curves corresponding to this mixture ratio variation and to the constant maximum power ratio of 15. The relative specific consumption (relative lb./h.p./hr.) curve for the natural ratio variation, considered together with the natural and the maximum B. M. E. P. curves, brings out clearly that the major effect of the natural enrichment in a carburetor is not so much represented by a failure in the development of power as by a loss in fuel economy. This amounts to 50 per cent at an atmospheric density of 0.030 pound per cubic foot.

For the attainment of maximum indicated fuel economy, the specific consumption must be maintained constant at all air densities. The natural discharge of fuel, w_x, must hence be reduced to w_x', and the relative reduction in fuel discharge is represented by

$$\frac{w_x - w_x'}{w_x} = 1 - \sqrt{\frac{P_x}{P_0}}, \text{ where } w_x' = w_0 \frac{P_x}{P_0},$$

the change in speed being neglected and T_x taken as equal to T_0.

Considering only the engine and its behavior, the specific fuel consumption (in pounds per I. H. P. per hour) F_i, on the basis of the indicated mean effective pressure, P_i, varies only inversely as the value of the mixture ratio. Thus the indicated economy of an engine goes on increasing right up to the superior or maximum air/fuel limit of combustibility of the charge.

But the usefulness of an engine is proportional to its brake mean effective pressure in pounds per square inch, P_b; and the value of P_b is not a definite function of P_i. As a consequence it is impossible to write a general expression for the brake specific consumption, F_b, without including empirical P_b values. However, having experimental data describing the relationships between P_b and R, the optimum values of R with respect to economy of operation, are readily found.

By definition: $F_b = w/B.H.P.$; $w = W/R$; $B.H.P.$ varies as NP_b; and therefore the relative specific consumption, F_b, varies as W/RNP_b. But also, in the case of an engine with a propel-

ler load, $B.H.P. \propto N^3\rho$, hence $N \propto \sqrt{P_b/\rho}$. Substituting this value in the expression for brake specific consumption, we have

$$F_b \propto \frac{W}{RP_b}\sqrt{\frac{\rho}{P_b}}$$

But since, by definition $W \propto P$, the relative specific consumption can be written

$$F_b = \frac{1}{R}\left(\frac{\rho}{P_b}\right)^{1.5}$$

MAXIMUM ECONOMY.

Solving this expression, including the values of ρ, R and P_b in plot 3, results in the maximum economy or optimum R values shown in plot 5, curve A. Since the engine from which these data were obtained is typical of the best practice in water-cooled aircraft engines, it is admissible here to make the general statement that the optimum value of the mixture ratio under open throttle is not a constant with varying atmospheric density, and that it is very approximately represented by $R = 106\rho + 15$, the equation for the "maximum economy" curve at A, in plot 5

Expressing this relationship as a per cent of the ground mixture ratio results in the characteristic enrichment curve of plot 5 at C, designated "maximum economy." In considering this curve it must not be overlooked that it can apply only in the case of realization of the experimental optimum ratio at ground level. The enrichment at any atmospheric density, necessary to secure maximum power as distinguished from maximum economy (from plot 3), is represented in plot 5 by the difference between the ordinate values of the two curves C and D at the density in question. For ready comparison, the optimum ratio values from curve A, plot 5, are indicated in plot 3 as those of maximum economy.

Since the rates of change in the specific consumption are very small in the neighborhood of the optimum values, plot 4, it is desirable in practice to work with ratios smaller than the optimum, in view of the increased outputs obtainable, and considering that by this device small irregularities in the functioning of the carburetor will less impair the regularity of the engine performance. Thus a ratio of 20 at ground density is seldom exceeded.

CARBURETOR OBSERVATIONS.

In the following summary of observations of natural metering characteristics of carburetors, in the Bureau of Standards' carburetors testing plant, the air temperature was maintained constant at all pressures in any set or group of runs. Thus the possible change in mixture ratio with fuel viscosity change does not appear, and the order of magnitude of the variation in the mixture proportion can be considered as very approximately that to be expected in many of the ordinary service environments of carburetors.

The work represents a complete study of mixture ratio and its variations throughout a range of densities of from 0.075 to 0.030 pound per cubic foot (zero altitude to approximately 30,000 feet) for both open and part throttle settings of the carburetor. Each of the several carburetors included was designed to supply mixture to three Liberty engine cylinders, 5 inches bore by 7 inches stroke. Under open throttle it was found by test[5] of this engine that the weight of air taken by three cylinders was 0.225 pound per second at an air density of 0.075 and at 1,700 r. p. m., and that the air taken at other densities was as the relative density.

The chart of plot 6 gives graphically the relations of air weight and manifold pressure drop for these three cylinders, under the several conditions of air density and of loading, as developed from data of engine tests in the Bureau of Standards' altitude laboratory.[5] By the term load is here meant that portion of the open-throttle air weight taken at the designated value of the load. In the runs involving throttle closure, the controls of the carburetor and of the testing plant were adjusted to maintain the values indicated in plot 6.

[5] The Bureau of Standards' altitude laboratory is fully described and illustrated in Report No. 44.

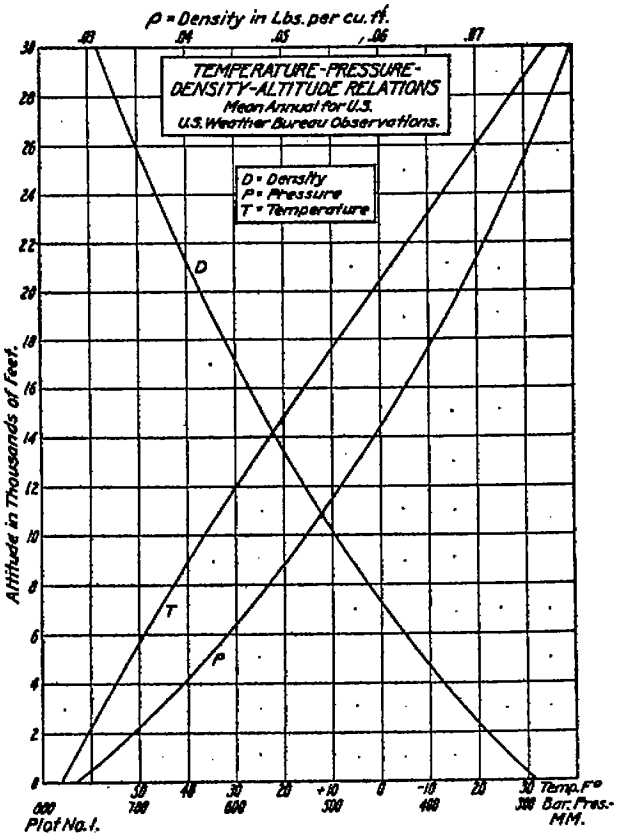

Plot No. 1.

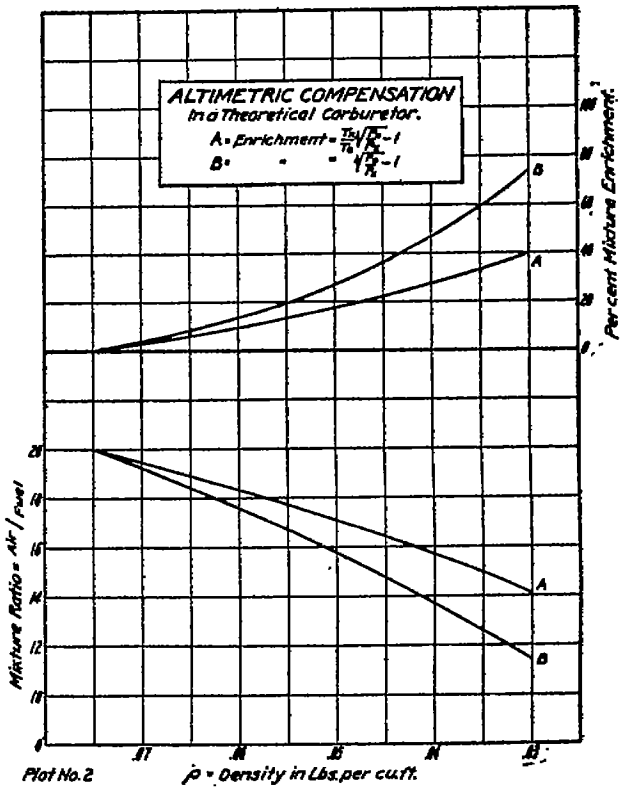

Plot No. 2

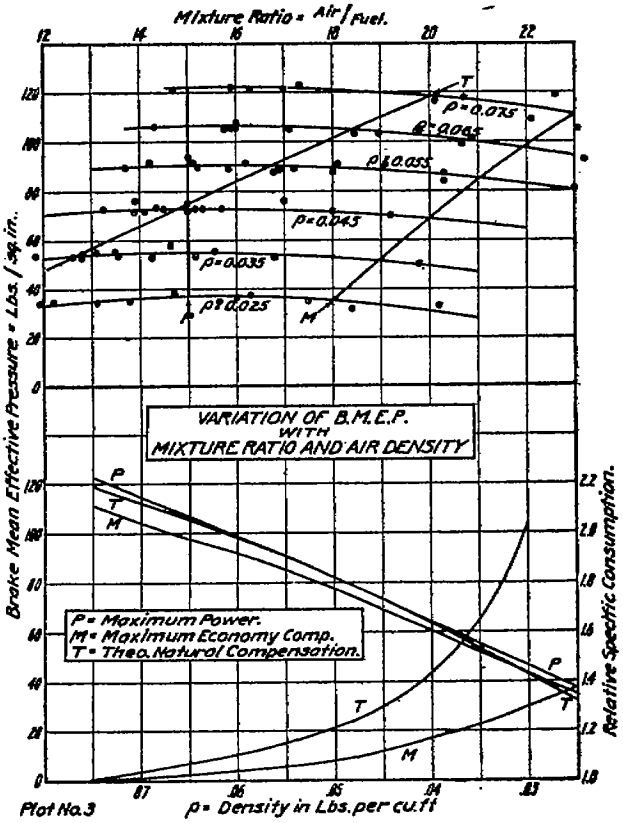

Plot No. 3

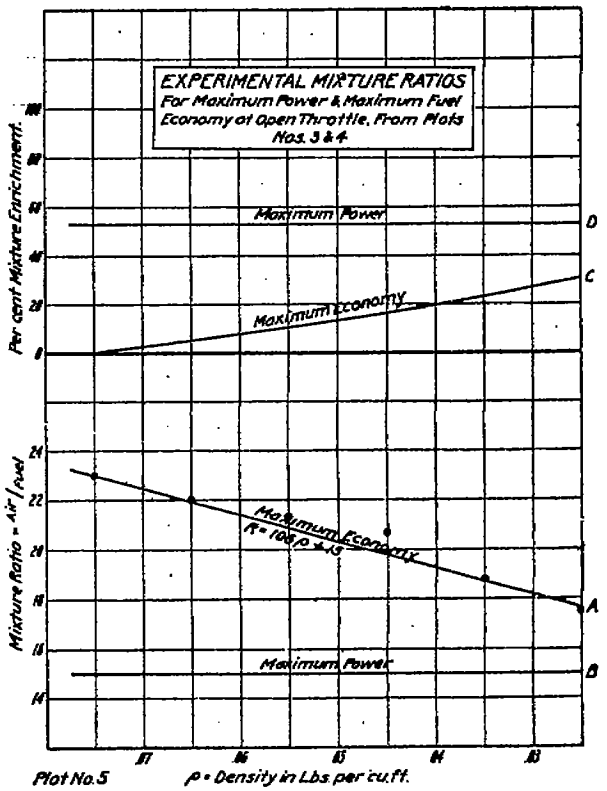

Plot No. 5

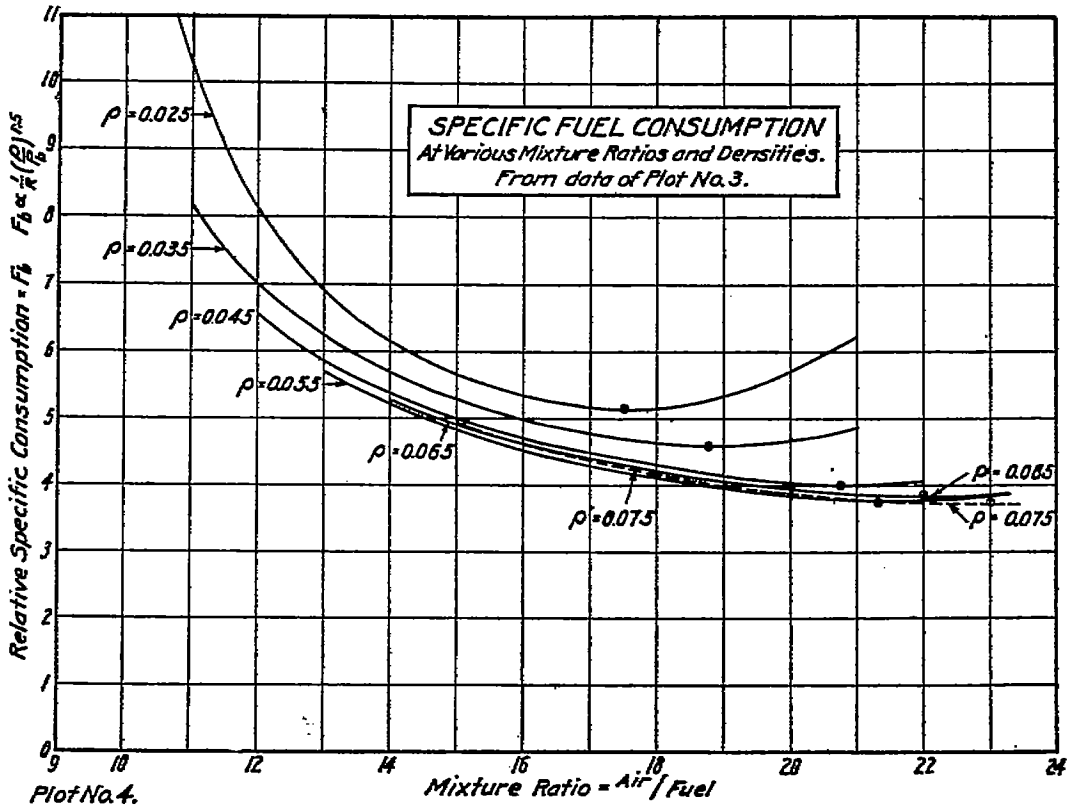
SPECIFIC FUEL CONSUMPTION
At Various Mixture Ratios and Densities.
From data of Plot No. 3.
ρ = 0.025
ρ = 0.035
ρ = 0.045
ρ = 0.055
ρ = 0.065
ρ = 0.075
ρ = 0.085
ρ = 0.075
Relative Specific Consumption = $F_B \propto \frac{1}{R}\left(\frac{\rho}{\rho_0}\right)^{0.5}$
Mixture Ratio = Air / Fuel
Plot No. 4.

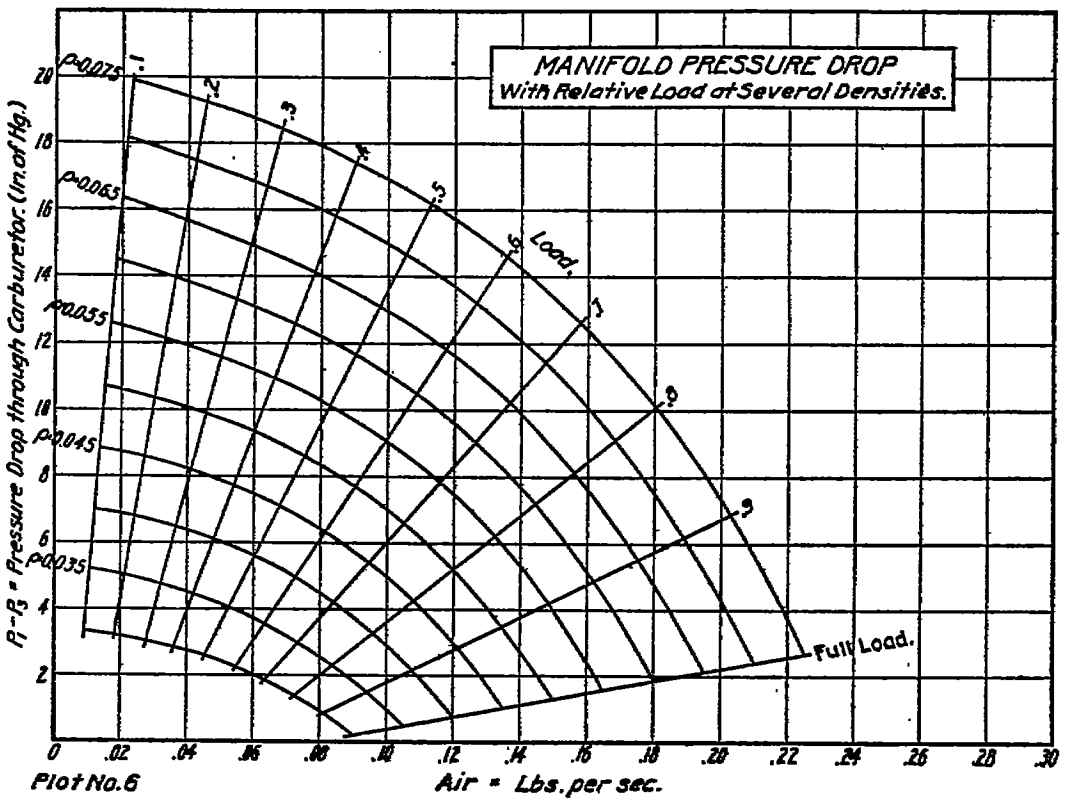
MANIFOLD PRESSURE DROP
With Relative Load at Several Densities.
ρ = 0.075
ρ = 0.065
ρ = 0.055
ρ = 0.045
ρ = 0.035
.1
.2
.3
.4
.5
.6 Load.
.7
.8
.9
Full Load.
$P_1 - P_3$ = Pressure Drop through Carburetor. (In. of Hg.)
Air = Lbs. per sec.
Plot No. 6

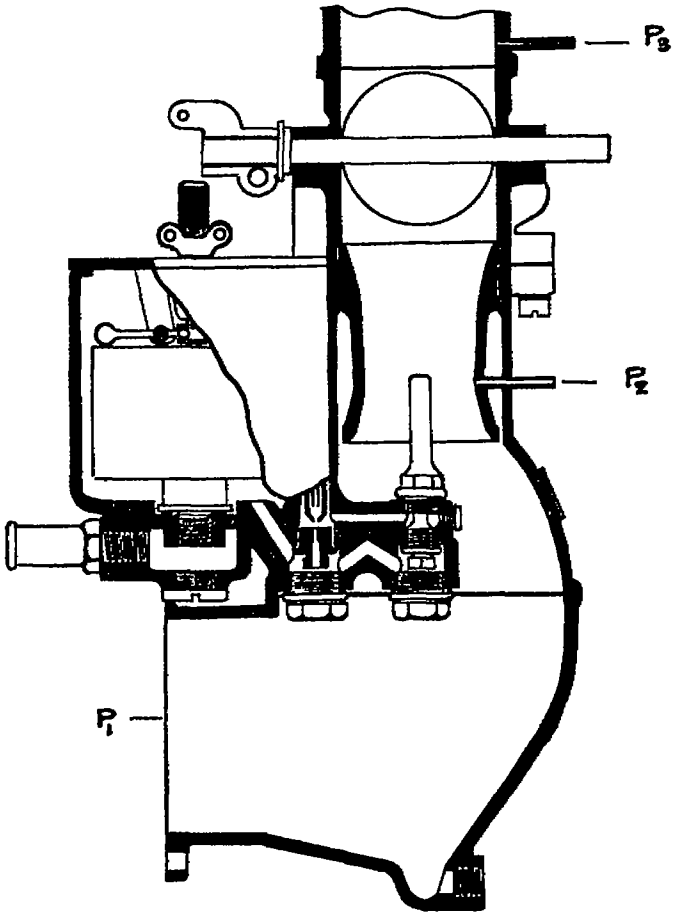

Fig. 7.

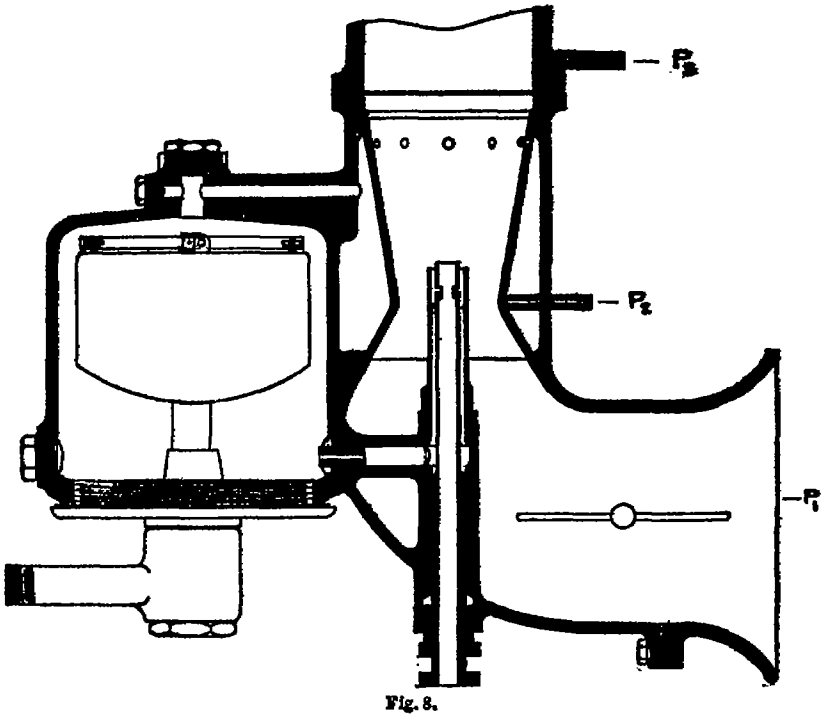

Fig. 8.

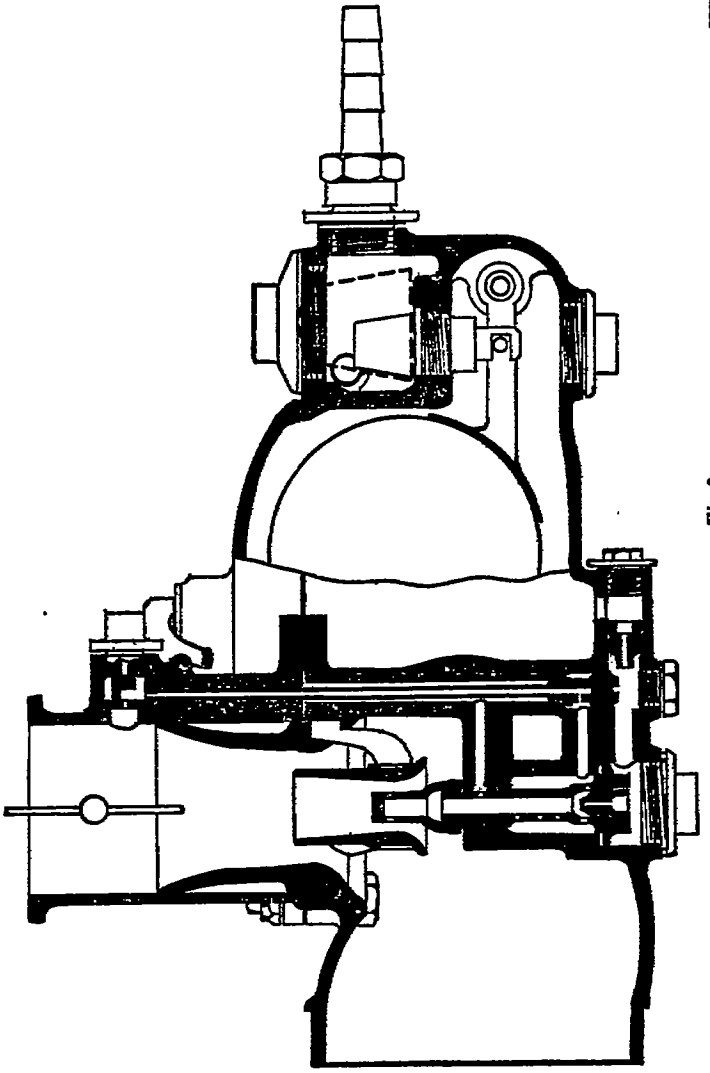

Fig. 9.

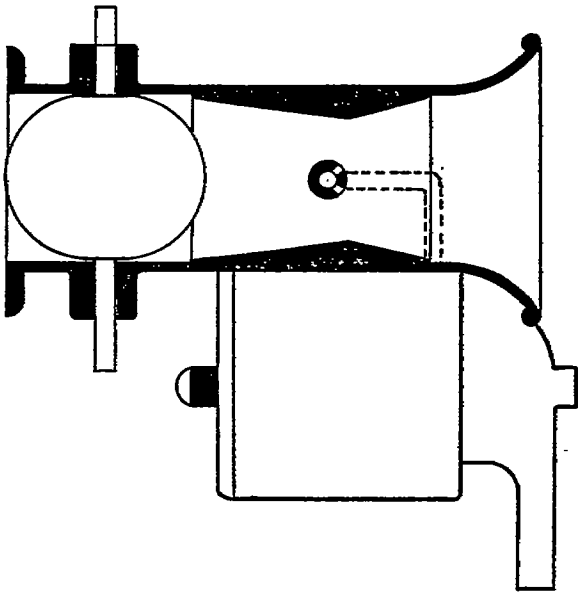

Fig. 11.

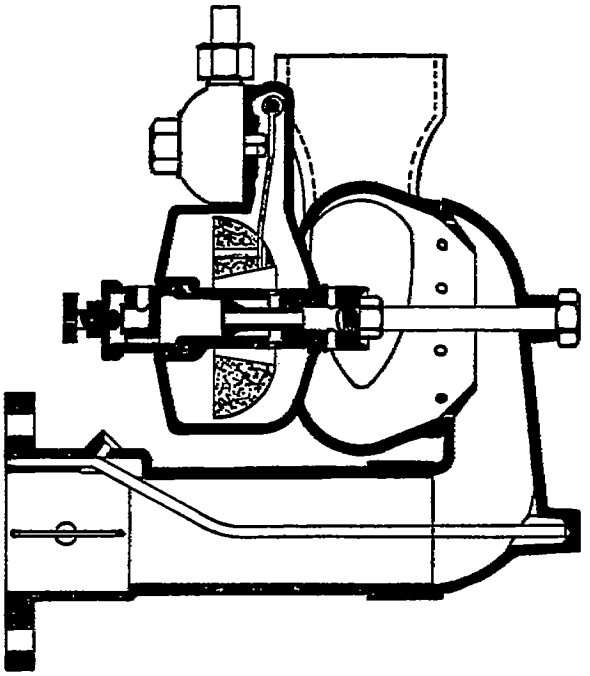

Fig. 10.

The mixture ratio observations on each carburetor are presented in two ways—ratio and per cent variation in ratio with density for several loads, and ratio and per cent variation in ratio with load for the several densities. The former expresses the altimetric compensation at the several relative loads, and the latter the load compensation with change in density. In each case, the per cent variation is stated in terms of the full load ratio at the ground.

The five carburetors included in the observations are designated in the following as A, B, C, D, and E,[6] and are shown in diagrammatic section in figures 7, 8, 9, 10, and 11, respectively. The results of the observations are shown in plots 12 to 20, inclusive.

Considering the natural altimetric compensation curves [7] of plots 12 and 13, for carburetors A and C, it appears that the full-load characteristics of these carburetors are practically identical, and are those of the theoretical case of plot 2, with $T_x = T_0$. The variations in the values found are only of such an order as might be expected in two designs embodying the differences in structure and method represented by the two cases. For all loads less than full load, and at all densities, the enrichments found in carburetor C are greater than in A, and this increase in fuel content is relatively greater at the larger densities. This is clearly presented in the corresponding load compensation curves of plots 15 and 16, and results from the differences in the two methods of fuel control under throttle. With small densities the natural full-load enrichments are so great that the characteristic changes in ratio with load become of lesser significance.

The load compensations, with respect to the peculiarities of structure of each device, are considered separately from the altimetric compensations, and their analyses are grouped together in the latter part of this report.

The altimetric compensation characteristics of carburetor B, plot 14, merit some discussion, since they depart markedly from those for conventional carburetors. The relatively greater pressure loss through a carburetor with smaller atmospheric pressures,[8] as in plot 18, for carburetor B at open throttle, is utilized to reduce the head ejecting fuel from the metering jet under this condition. The weight of fuel discharged in this carburetor is expressed $w = \sqrt{P_3 - P_2}$, where P_3 is the throat outlet pressure communicated to the float chamber and P_2 is that at the nozzle outlet. For any one value of the relative load, $W/P = V =$ a constant; hence $P_2/P =$ a constant and $P_2 = cP$. But P_3/P is not a constant, since the relative loss due to friction through the carburetor increases with lesser values of P and bears the relationship, from plot 18, $\frac{P_3}{P} = aP + b$; and $P_3 = aP^2 + bP$, where a is the slope of the curve, plot 18, and b its intercept on the P_3/P axis. Substituting in the expression for weight of fuel discharged, we have

$w = \sqrt{aP^2 + bP - cP}$, from which it appears that when b is equal to c

$w \propto P$, and that

$w_x = w_0 \frac{P_x}{P_0}$, which is the relationship giving an invariable mixture ratio with altitude change.

---

[6] Carburetor A (fig. 7) is the Zenith Carburetor Co.'s design, used as equipment on aeronautic engines. It is compensated for load changes by compounding the two nozzle discharges, one of them passing into an intermediate atmospheric well. Altimetric mixture correction is secured by a manually operated plug valve controlling the float chamber pressure. The setting used is as follows: Throat, 1.22 inches diameter; main jet, No. 140; compensator jet, No. 150; and idling well, No. 100. The numbers of the jets indicate the cubic centimeters of water discharged per minute under a 12-inch head.

Carburetor B (fig. 8) is an experimental design by the Stewart-Warner Speedometer Corporation, developed to possess inherent altimetric mixture regulation. The throttle is placed in the air intake, to secure maximum pressure differences on the spraying device. Compensation for load changes is secured by equalization of the float chamber pressure with that in the throat outlet. The setting used is as follows: Throat, 1.312 inches diameter; fuel passage, 0.067 inch diameter; and air passage through the nozzle, 0.199 inch minimum diameter.

Carburetor C (fig. 9) is an aeronautic type produced by the Stromberg Motor Devices Co. It is compensated for load changes by the sizes and spacings of air and fuel portings in the assembly of the main nozzle member. Both fuel and air discharge into the throat of the main air passage. Altimetric correction of the mixture is by regulation of the float chamber pressure, either by a hand operated valve or by an automatic valve under control of an aneroid bellows. The setting used is as follows: Main air throat, 1.50 inches diamater; main fuel jet, 0.089 inch diameter; atmospheric vent to the well, four holes 0.038 inch diameter.

Carburetor D (fig. 10) is the vortex type produced by the Ensign Carburetor Co. Air enters the vortex chamber tangentially, and its rotation causes a lowering of the pressure at the center of the mass, where the fuel is admitted. The work done on this carburetor included only enough runs to define its natural altimetric compensation under open throttle.

Carburetor E (fig. 11) is a design produced by the Marvel Carburetor Co It is characterized by the upstream inclination of its fuel discharge passages, which is relied upon to give load compensation, except at idling. Altimetric correction is obtained by a large manually operated plug valve admitting air directly to the passage on the engine side of the throat. Only its natural open throttle altimetric performance was studied

[7] It should be clearly understood that throughout the investigation of carburetors, included in this report, no attempt was made to correct the mixture proportions by manipulation of the control provided for that purpose. Only the *natural* changes in ratio were studied, or are of interest in the present case, since anything desired can be obtained with suitable setting of the control member.

[8] See also the curves accompanying Part III of this report.

Actually it is not possible to make b and c equal. And, considering the need for somewhat enriched mixtures for maximum economy at reduced pressures (plots 3 and 4), it is undesirable to reduce b to equality with c. It is obvious that the ratio of the passage areas (A_2/A) controls the value of c, and that b is largely controllable in the design of the fuel nozzle and the adjutage of the air throat,[8] since it is functional with the turbulence in the air stream. Since b is normally greater than c in good designs permitting the attainment of high values for the volumetric efficiency in an engine, it is evident that with a given c the only way to obtain smaller b values is by an increase in the turbulence in the throat adjutage, thus obtaining mixture control at the expense of effective capacity. It follows that adjustment of the relationship between b and c is best accomplished by manipulation of the ratio of areas A_2/A.

Reference to figure 10 shows that the metering structure of carburetor D is wholly different from the foregoing cases in that the air stream is early set in rotation by virtue of its tangential entrance to the so-called vortex chamber. The rotation of the air mass within the chamber causes a lowering of the pressure at its center, due to the action of centrifugal force. In this case the metering head on the fuel is directly as the difference between the pressure of the atmosphere and that at the axis of rotation. Since the latter varies as V^2, as does also the pressure at the throat in a conventional tube type carburetor, the fundamental compensation characteristics are identical in the two cases. The observed altimetric compensation of carburetor D is shown in plot 19.

Carburetor E, figure 11, is a tube type in which the fuel discharges at the throat from passages inclined at 45° with reference to the axis of the passage, thus facing them somewhat against the air stream. The result is that the difference in pressure to which the metering passage is subjected is less than that with the ordinary jet structure. The pressure at the throat varies as V^2, as in the typical case, but is modified with respect to the fuel discharge passages by the changing lines of flow, with changing velocity, about the piece in which the discharge passages are formed. Also the metering head varies inversely as some function of the density of the air passing the openings. The gross result is represented by an altimetric compensation curve, plot 19, which, starting at ground density, at first has a smaller rate of enrichment than has the simple conventional case. This rate becomes an increasingly greater one as the density is reduced, until at a density of 0.030 pound per cubic foot, the rate of enrichment is very approximately one and one-half times that for the theoretical case.

COMPRESSION RATIO AND PERMISSIBLE LOADING.

In aircraft engines the compression ratio may be anywhere between 4.5 and 6.5 (with certain blended and modified fuels it is both possible and desirable to carry this ratio up to slightly over 7.) With the resulting compression pressures it is possible to operate the engine at and near full throttle on mixture ratios (air/fuel) up to and including 24. The approximate minimum fuel consumption in pounds per B. H. P. per hour is obtained at full load at the ground with a mixture ratio of about 20. Also, the output with this ratio is within about 3 per cent of the maximum obtainable from the engine, plot 3.

Where the compression ratio is carried to 5.3 or above, as is usual in high output engines, it is imperative that the engine be not operated with open throttle at the ground for more than a very few moments at any one time. For this reason it is the exception to operate land aircraft at more than about 0.85 load at and near the ground. At higher levels a greater relative loading is permissible because of lowered air density.

Thus it is permissible to design for a high-ceiling aircraft on the basis of reduced loading at the ground. In plot 19 the altimetric compensation characteristics of all five carburetors are plotted on the basis of full load at all densities. For comparison, the altimetric characteristics of carburetor B is given, on the basis of 0.95 load at ground, varying to full load at a density of 0.030 pound per cubic foot.

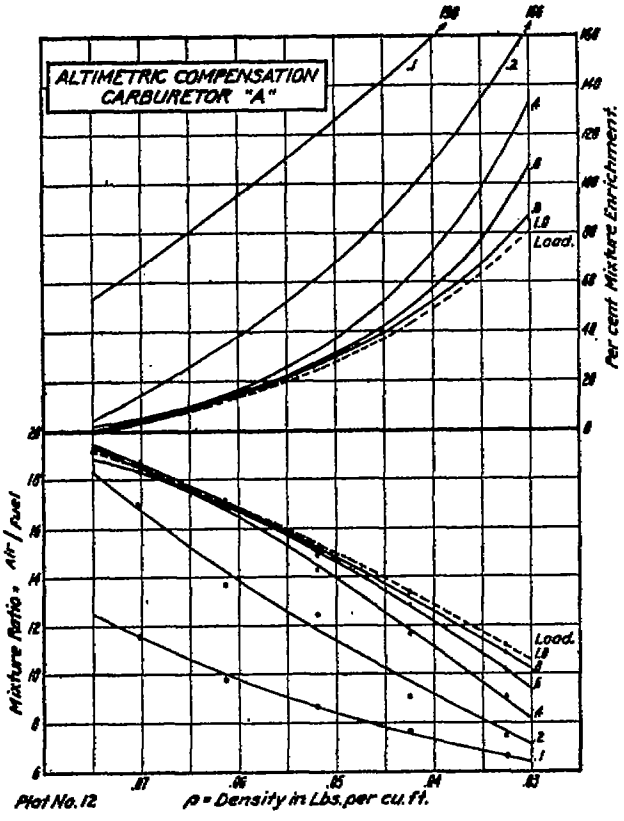

Plot No. 12

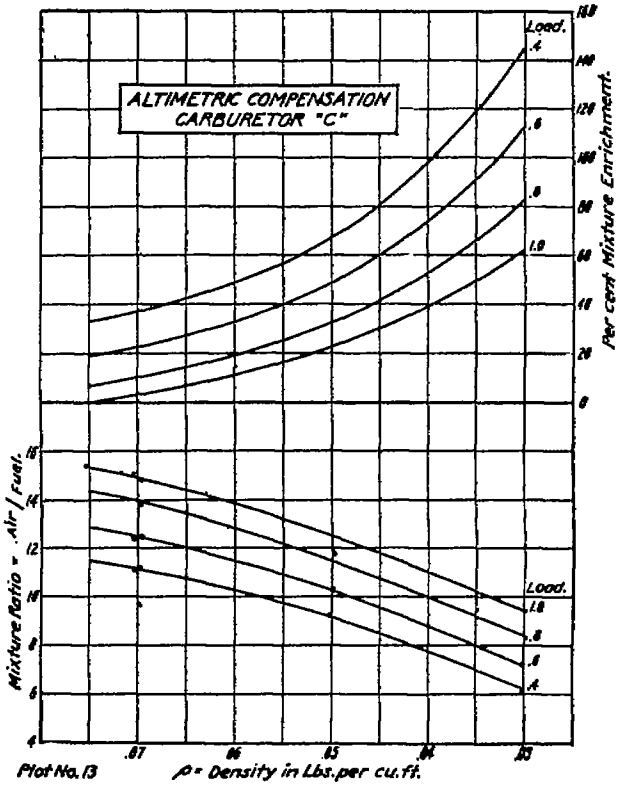

Plot No. 13

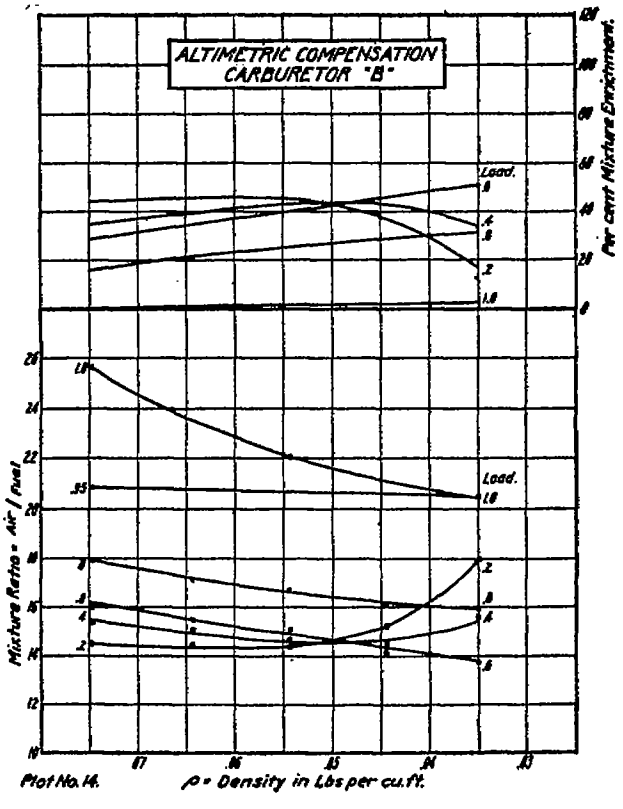

Plot No. 14.

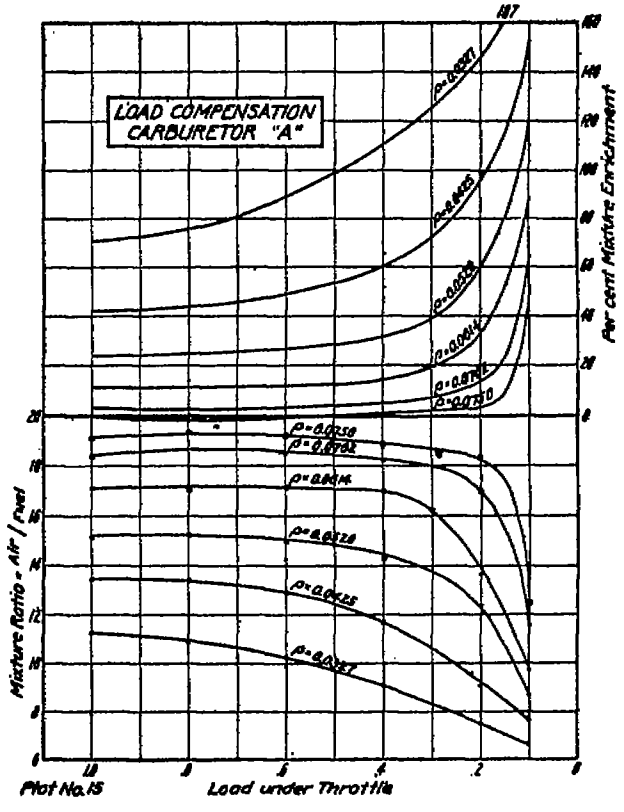

Plot No. 15

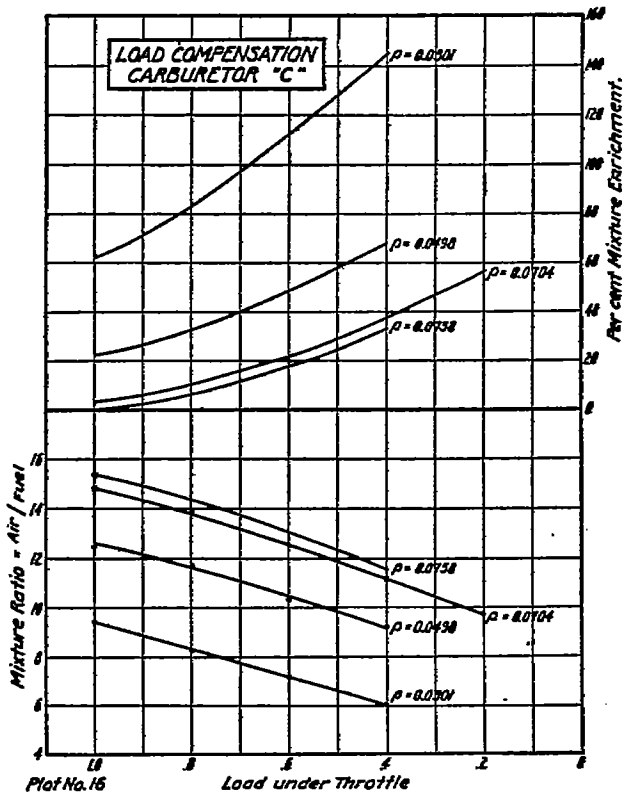

Plot No. 16

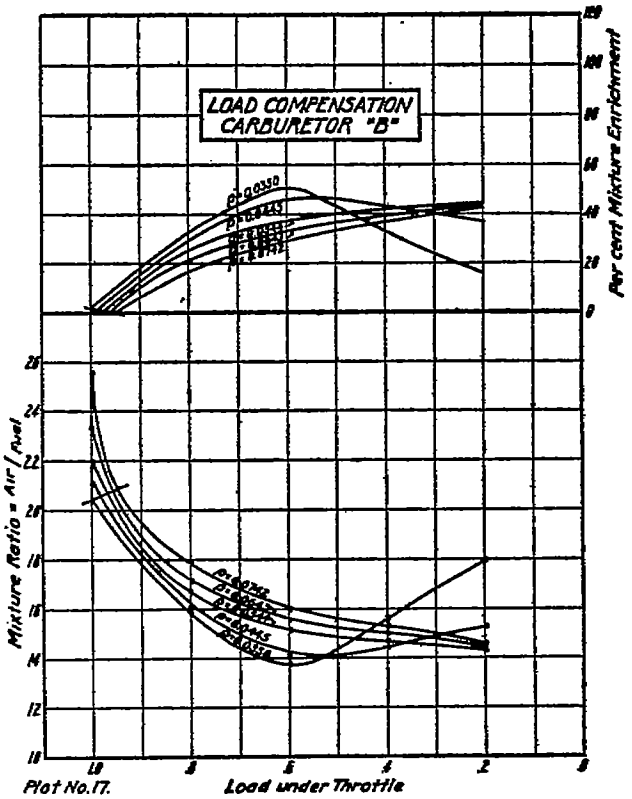

Plot No. 17.

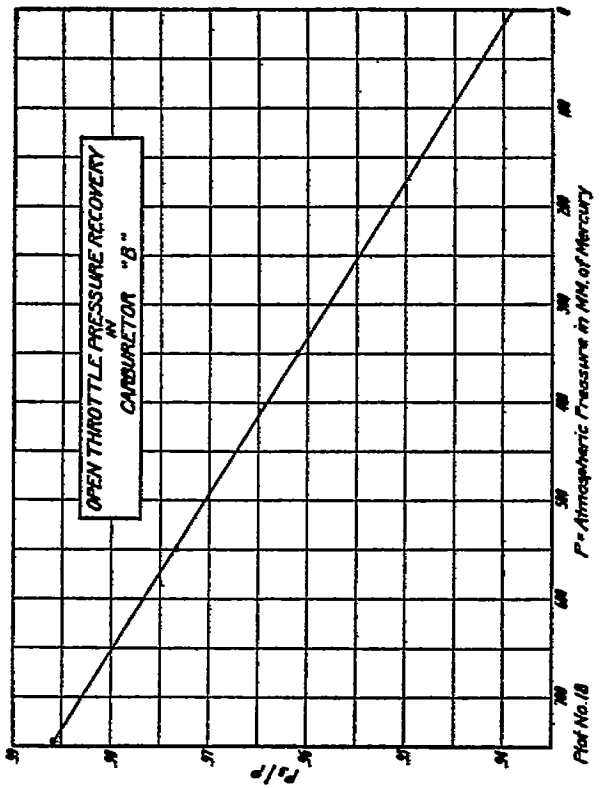

Plot No. 18

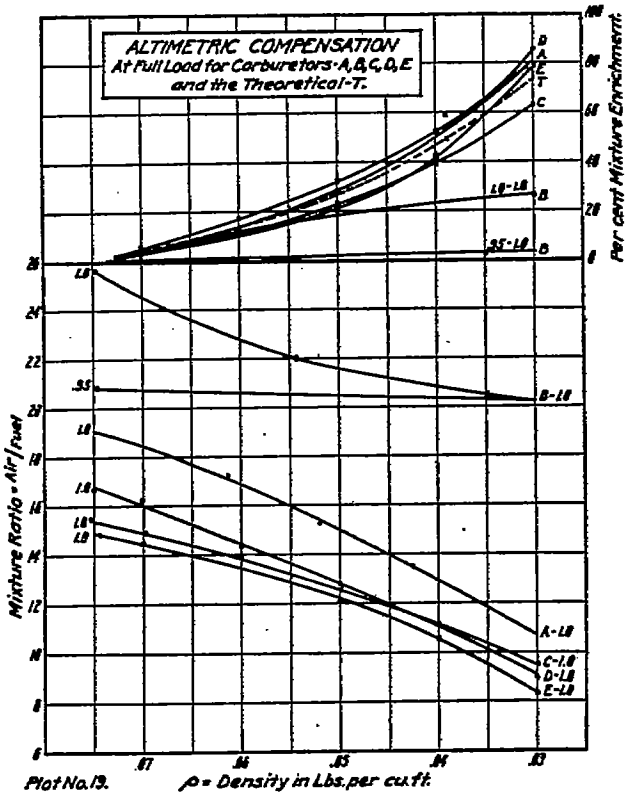

Plot No. 19.

Considering the altimetric compensation between the density limits of 0.075 with 0.85 load, and 0.030 with full load, the relative performances of carburetors A, B, and C are as in plot 20.

CONDITIONS CONTROLLING ECONOMY.

It is evident that mixtures of air and fuel vapor are explosive in an engine cylinder between widely separated limits of composition. While there is a superior limit, maximum air to fuel, as well as an inferior one that can not be passed for the production of a useful result, it is rather toward the superior limit that it is found most advantageous to work, considering the specific consumption of fuel. Particularly is this true in aircraft service, where the fuel constitutes a considerable portion of the weight transported. Economy of fuel is of paramount importance.

Compared with the condition of open or nearly open throttle performance, the above applies with equal force to the conditions of part load, since the major portion of an ordinary flight is carried out with the engine delivering somewhere between 0.5 and 0.8 of its full power.

It is interesting to examine the probable rate at which the mixture ratio can be modified most favorably under the conditions of part-load operation. There is but little experimental data on which the analysis can be based; and there are none that include simultaneously all the conditions of engine operation.

The three external conditions fixing the ratio of maximum economy are those controlling the rate of propagation of the combustion: the temperature of the charge at the time of ignition; its pressure at time of ignition; and its dilution with noncombining gases. There must be mentioned also, as highly important contributing conditions, the turbulence in the ignited mass of charge, and the extent of the initial ignition. But since those last are nearly constants in any one case, they very reasonably may be omitted at this time.

The temperature of the charge at time of ignition is functional with its temperature at the beginning of compression, and with the compression ratio. The latter is fixed in any one case; and the former varies with the condition of the charge in the manifolding and with the heat given up to it by the cylinder parts and by the residual gases in the cylinder.

Here it is necessary to make some assumptions. The unvaporized fuel content of the charge at its entry to the cylinder is normally quite considerable. But it is possible for a mixture having a suitable proportion of fuel to exist in a state of dryness at the pressures and ordinary temperatures of the intake manifold. A consideration of the cylinder charge temperature is much simplified if it is assumed that the heat taken from the cylinder parts serves only to dry the charge, without altering its temperature. On this basis, the increase in charge temperature in the cylinder over that in the manifold is only that due to the mixing with the heated residual gases from the preceding cycle. Since the mean specific heats of charge and residue are approximately equal, the resulting mean temperature at end of the charging stroke may be expressed

$$T_1=\frac{w_c T_c+w_r T_r}{w_c+w_r}$$

where w is weight and T absolute temperature of charge and residue, designated by the subscripts $_c$ and $_r$, respectively.

Knowing T_1, the temperature at time of ignition T_2 is found from the expression for adiabatic compression

$$T_2=T_1\left(\frac{v_1}{v_2}\right)^{0.3},$$

where v_1/v_2 is the compression ratio. Likewise the pressure at end of compression P_2 is expressed [9]

$$P_2=P_1\left(\frac{v_1}{v_2}\right)^{1.3}.$$

[9] The value of the exponent k=1.3 is an empirical value found, as the result of many experimental trials at the Bureau of Standards and elsewhere, more nearly to suit engine conditions than does the value 1.41 for air alone.

In the following P_1, is taken equal to the mean intake manifold pressure, and the ratio v_1/v_2 equal to 5.3.

The dilution D, of fresh charge with residual gases is $D=w_r/w_c$.

On this basis, from the curves of plot 6, and from additional engine-test data obtained in the Bureau of Standards altitude laboratory, the curves of plot 21 result as approximately describing characteristic variations in the ratio controlling conditions of pressure, temperature, and dilution, under throttle.

EFFECTS OF COMPRESSION PRESSURE.

In constant volume experiments [10] it develops that the direct influence upon rate of combustion of initial pressure, other conditions being constant, is fairly small with mixtures of about the theoretical combining proportions. However, with somewhat poorer mixtures, the direct effect of change in initial pressure is of great importance, and becomes increasingly so as the proportion of fuel is reduced. At the same time the ratio of pressure rise (explosion pressure/initial pressure) is practically a constant for a given mixture ratio, irrespective of the initial pressure. These experimental relationships are expressed graphically in plot 22, and particular attention is called to the fact there generally indicated that as either limit of explosibility is approached, the times to attain maximum pressure are more nearly equal for different initial pressures. It is in the region of the intermediate ratios that the major direct effects of initial pressure are realized with respect to rate of combustion.

The above supplies a qualitative explanation of the enrichment required under open throttle as the atmospheric pressure is reduced. Since an aircraft engine suffers only a comparatively small speed reduction with lowered atmospheric pressure, it is necessary that the rate of combustion of the charge be maintained somewhere near constancy for the attainment of maximum economy. Since the compression pressure is a direct function of the atmospheric pressure, it follows that to maintain the rate of combustion the mixture must be enriched as the atmospheric pressure is reduced.

Under part throttle the foregoing considerations of the effect of compression pressure apply; but there must also be taken into account the effects of change in charge temperature and of change in dilution with products from the preceding cycle.

On the assumptions made in the foregoing, the temperature curves of plot 21 (for an engine having a partially water-jacketed intake manifold) indicate that the temperature at end of compression will change but slightly, and at the same time favorably, as the throttle opening is reduced. For an approximation, it may be taken that the influence of temperature changes may be neglected. In general the fuel in the mixture, considering a given rate of combustion, must be an inverse function of the temperature,[11] plot 23. This follows from the fact that the higher the charge temperature the less additional heat will be needed to raise a given portion of the charge to its ignition temperature; and consequently the less need be the heat of combustion to cause propagation throughout the whole mass of the charge.

CHARGE DILUTION.

The separate and direct effects of dilution of the charge with the chief combustion product have been very thoroughly investigated, at atmospheric pressure and temperature, for mixtures of air with methane and with natural gas, diluted with carbon dioxide.[11] For mixtures having various ratios of air to fuel, subsequently diluted with varying proportions of CO_2, it is found in all cases that the superior limit of explosibility, i. e., maximum air to fuel, is reduced as the dilution is increased. This follows from two chief causes: The relatively high specific heat capacity of carbon dioxide; and the dilution of the oxygen content of the charge. Plot 23 includes a plotting of the explosibility limits for mixtures of air and natural gas diluted with

[10] Bairstow and Alexander, Proc. Royal Soc. (Brit.) 1905; closed-vessel experiments on mixtures of coal gas and air.

[11] The observations given in plot 23, on the controlling influences of temperature and dilution, are taken from U. S. Bureau of Mines Technical Papers, No. 121, Burell and Robertson, on The Effects of Temperature and Pressure on the Explosibility of Methane-Air Mixtures, and No. 43, Clement, on The Influence of Inert Gases on Inflammable Gaseous Mixtures.

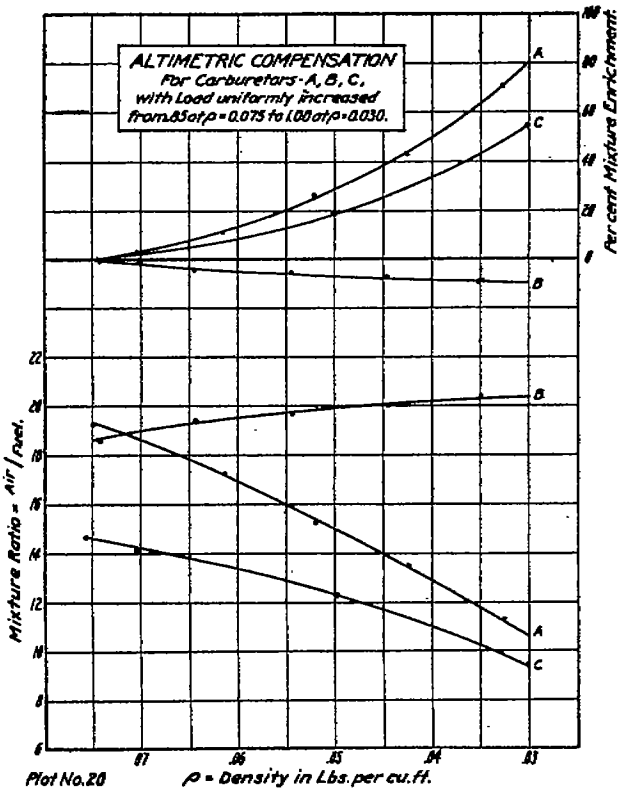

Plot No. 20

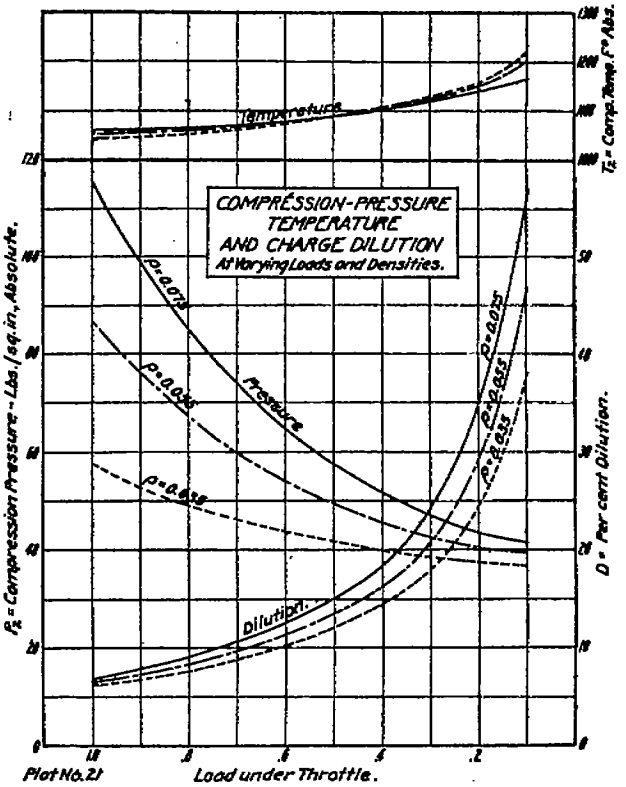

Plot No. 21

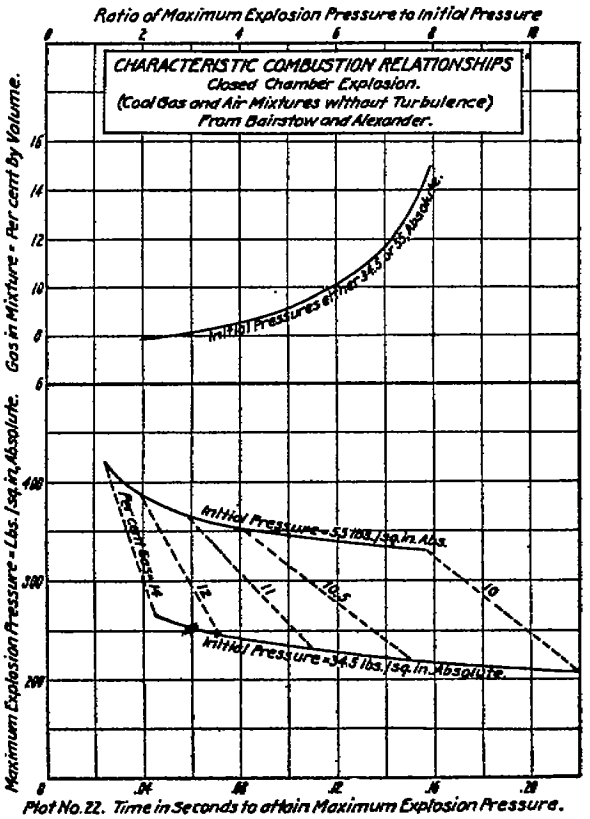

Plot No. 22.

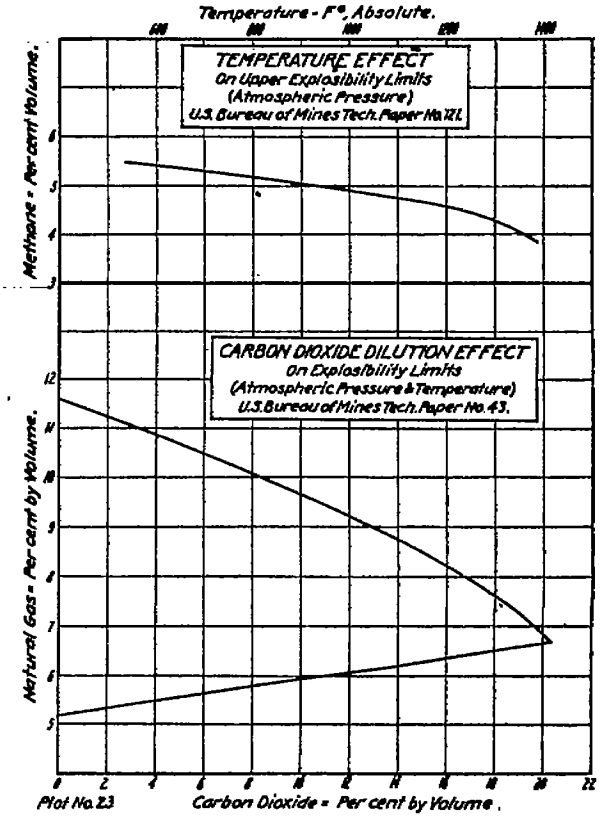

Plot No. 23

carbon dioxide. The graph may be taken as characteristic of the effects of such dilution upon mixtures, of air and fuel vapor, at atmospheric pressure and temperature.

While it is impossible, in the absence of direct experimental data, to state definitely what the combined effects of reduced compression pressure and increased charge dilution will necessitate in the way of change in the air-fuel ratio, it is evident that such a combination will impose a greater enrichment than will either one alone. If it is assumed (1) that the effect of change in the one condition is unmodified by simultaneous change in the other; (2) that the order of variation in the optimum mixture is the same with charge dilution as in the case of the superior explosive limit (plot 23); and (3) that the range of explosibility at maximum dilution in an engine is 50 per cent of that with minimum dilution,[12] it results that at a density of 0.035 pound per cubic foot, and 0.1 load, the mixture ratio should have a value of approximately 15.5 for maximum economy.

Since the compression pressures at 0.1 load are nearly the same at all air densities, and since the same is true of the dilutions and temperatures, it can be taken that the optimum mixture ratio (that of maximum economy) approaches that of maximum power, at all densities, as the throttle is closed to the idling position.

In final consideration of plot 21, it should be noted that while at ground level 0.1 the maximum air corresponds very approximately to idling of the engine, the relative loading at idling increases as the density is reduced, since almost as much power is required to turn the motor over at small densities as at large. Thus, at reduced densities it is impossible to reduce the relative air to its idling value at the ground, without stalling the engine—unless its revolution is assisted by the reaction of the propeller, as in descending flight. It appears that the relative air for idling at 0.035 density, plot 21, is very approximately 0.4. In any case, this latter consideration has no bearing on the foregoing as a study of the carburetion requirements.

NATURAL LOAD COMPENSATION.

The load compensations of the several carburetors are interesting, in that they are expressions of individual preferment in metering method and structure, and of the compromises that have been included in each device, by choice or otherwise.

In the case of the elemental carburetor, comprising a constricted air passage having a fuel passage discharging at its throat, the load compensation is fundamentally perfect (disregarding the requirements of the engine), in that a constant ratio between the weights of air and of fuel will be maintained, if the coefficients of discharge for the air and the fuel passages bear a fixed relationship to each other.[13] In practice there are several almost unavoidable circumstances which modify this simple case, and there are those discussed conditions of requirement which make a constant weight relationship undesirable.

In the main, the load compensation of carburetor A, plot 15, follows that of the simple case above. But here w is made approximately proportional to W, not by selection of passages having a constant ratio of coefficients, but by utilizing the sum of the discharges of two nozzles operating under dissimilar conditions. It is arranged, through separate means operating only at the smallest air flows, to satisfy the requirement for an enriched mixture with reduced relative air flow.

From the diagram of carburetor B (fig. 8), it appears that throttle manipulation controls the air charge weight by modification of the density of the air stream, as well as by modification of its velocity. This is a condition not contemplated in the simple case, in that V is no longer only proportional to W at a given atmospheric density. The result in the relative performance of carburetor B is that the fuel discharge reduces less rapidly than the air weight during throttle closure, since the velocity of the air stream is less reduced for a given change in charge weight. The load compensation, neglecting the control exercised by the nozzle air passage, is identical

[12] This assumption is quite generally supported by observation of permissible mixture ratio variation for steady operation, at idling and at open throttle.

[13] At any air density W varies directly as V; and w is proportional to $\sqrt{h}$ or to $\sqrt{P-P_2}$ where P_2 is the throat pressure. But within the desirable range of values in a carburetor, $\sqrt{P-P_2}$ is also directly as V. Hence w varies directly as W.

with the natural altimetric compensation discussed in the foregoing for the theoretical case, and found to exist in a conventional carburetor structure.

It seems that the load compensation of carburetor *C* has been developed with regard for the requirements of service, in so far as they are known. The mixture ratio reduces almost directly with the load. This results from the nozzle structure in which decreasing heads across the nozzle outlet cause less air to be admitted to modify the metering head, both by virtue of the change in pressure difference and by virtue of a change in the effective area of the air ports. This carburetor represents the simple case, with a superimposed empirical metering characteristic, and fitted in addition with separate means for arbitrarily modifying the relative fuel discharge at the smallest air flows.

CONCLUSIONS.

With respect to engine requirements, it may be said that the desirable metering characteristics which a carburetor should have can not be fixed absolutely, being dependent upon type of service requirements. The following statements are given as the best available hypotheses upon which to base carburetor design, in the light of our present knowledge.

(1) The mixture ratio for development of maximum power is approximately constant (at about 15 air/fuel for gasolines) at all relative loads and at all air densities.

(2) The mixture ratio for the development of maximum economy at full load becomes smaller as the atmospheric density is reduced.

(3) The mixture ratio for the development of maximum economy at part loads becomes smaller as the load is reduced by throttling.

(4) The mixture ratio of maximum economy becomes more nearly equal to that giving maximum power as the output and as the atmospheric density are reduced.

With respect to the carburetor proper, it is concluded that:

(5) The ordinarily employed variations in structure and in method of fuel control, in carburetors resembling the simple elemental type, effect inappreciable modifications of the altimetric compensation, being subject to the same considerable rate of enrichment with reduced atmospheric density.

(6) Ordinarily employed variations in carburetor structure and in method of fuel control result in widely different characteristic changes in mixture ratio as the load is changed by throttle manipulation.

REPORT No. 49.

PART VI.

CONTROL OF CARBURETOR METERING CHARACTERISTICS FOR AIRCRAFT SERVICE.[1]

By Percival S. Tice and H. C. Dickinson.

RÉSUMÉ.

The following report is a discussion of ways and means of correcting the enrichment of the mixture naturally occurring in carburetors under the conditions obtaining in flight at altitudes above the earth's surface. Possible control methods are described and discussed in the light of the requirements for best engine performance. The text includes a statement of the need for and the possibilities of an automatic mechanical regulation of the control device.

It is concluded that (1) any one of several control methods will be equally effective; (2) automatic regulation of the control is, in general, more desirable than manual regulation; and (3) it is possible to regulate the control automatically to give a complete correction of the mixture at all altitudes.

CONTROL OF ALTIMETRIC CHARACTERISTICS.

Considering the desirable mixture ratio variations dictated by engine requirements, it is evident that some form of control must be incorporated in a carburetor approximating the simple type,[2] to permit it to serve the engine properly over a range of atmospheric densities. The natural characteristic in a carburetor is that of too rapid increase in the relative fuel content of the mixture, as the atmospheric density is reduced. Hence the altimetric control under discussion is one that permits of modifying the natural air to fuel relationship in an inverse manner to the changes in atmospheric density. The following is offered in discussion of means for the accomplishment of this control.

The possible methods all involve a modification of the relative amount of fuel supplied, since appreciable change in the weight of air taken is impracticable. These methods divide into two classes, as follows: (1) Control of the area of the fuel metering passage; and (2) control of the pressure difference or head across that passage. Of the two, the latter class is that almost always employed, because it is less sensitive in adjustment and develops into a simpler and less delicate structure, more in accordance with the accepted general aims in carburetor design.

In class (2) we have subclasses where the pressure difference is modified by (*a*) control of the float chamber pressure and (*b*) control of the nozzle outlet pressure. Of these, the former at this time enjoys the greater vogue with carburetor designers, although, as will be shown, the latter is capable of useful and simple development.

If, as is usual, the altimetric control is designed with special reference to the open throttle condition, it does not necessarily, in its open throttle setting, cause the engine to be supplied with a desirable mixture when the throttle is partially closed. In such a case, the control

[1] This report was confidentially circulated during the war as Bureau of Standards Aeronautic Power Plants Report No. 48.

[2] The simple carburetor is one possessing a single constricted air passage, having a fuel passage discharging at its throat, and provided with a throttle in its outlet, so that the velocity of the air in the throat is substantially proportional to the weight of air taken.

must be manipulated with the throttle. A discussion of this phase of the problem will be entered into later, since it constitutes a final criterion on the value of any proposed method. Similarly, automatic regulation and ease of application of automatic regulation of the control will be discussed separately.

Considering the simple requirement for the development of maximum power, it is necessary that the mixture ratio be maintained constant under all conditions. Hence the necessary relative reduction in fuel discharge will be equal to

$$\frac{w-w'}{w}=1-\frac{\sqrt{NP}}{T}=1-\sqrt{\frac{N\rho}{T}},$$

or at altitude x in terms of the discharge at zero altitude the reduction in fuel is written

$$1-\frac{T_o}{T_x}\sqrt{\frac{N_xP_x}{N_oP_o}}=1-\sqrt{\frac{N_x\rho_x}{N_o\rho_o}\frac{T_o}{T_x}}$$

in which the following notation is used:

w = weight of fuel naturally discharged $\propto \sqrt{NP}$;
w' = weight of fuel desired $\propto N\rho \propto NP/T$;
h = natural metering head on fuel $\propto NP$;
h' = desired metering head on fuel $\propto (N\rho)^2$;
N = engine r. p. m.
P = atmospheric pressure, absolute;
T = atmospheric temperature, absolute
ρ = atmospheric density, pounds per unit volume.

In the case of class (1), in which the area of the fuel passage is under control, the requisite relative reduction in area is as expressed above. In class (2), where the metering head is controlled, the necessary relative reduction in head will be

$$\frac{h-h^1}{h}=1-\frac{NP}{T^2}=1-\frac{N\rho}{T},$$

or at altitude x in terms of zero altitude

$$1-\frac{N_xP_xT_o^2}{N_oP_oT_x^2}=1-\frac{N_x\rho_xT_o}{N_o\rho_oT_x}.$$

In general, the change in N with change in altitude is comparatively small, as is also the ordinarily experienced change in T at the carburetor, hence it may be permitted to write the above expressions in the simplified forms

Relative reducton in passage area $=1-\sqrt{\frac{P_x}{P_o}}=1-\sqrt{\frac{\rho_x}{\rho_o}}$; and

Relative reduction in metering head $=1-\frac{P_x}{P_o}=1-\frac{\rho_x}{\rho_o}$

It is obvious that control of the float-chamber pressure (class 2*a*) is accomplished when the float chamber is provided with a vent passage to the atmosphere, and is also in communication with some point at subatmospheric pressure in the carburetor air passage. The controlling or regulating member is a valve in one or the other of these passages, as in figure 1. In such a design, suitable selection of relative passage capacities and locations must be made to insure that the control will have sufficient range to accomplish its purpose.

Control of the nozzle-outlet pressure (class 2*b*) can be accomplished in each of several ways. The velocity of the air passing the nozzle can be modified by altering the effective area of the passage about the nozzle outlet (Fig. 2 at *A*.). The relative amount of air passing the nozzle, and therefore the velocity, can be modified by an atmospheric by-pass, admitting air to the carburetor at a point beyond the main air throat (Fig. 2 at *B*.). And, with fixed air passages, the nozzle-outlet pressure can be modified by venting the outlet of the nozzle itself to the atmosphere (Fig. 2 at *C*.).

Each of the foregoing methods has been applied to aircraft service, usually under direct manual regulation; and each can be fully adequate when suitably proportioned and controlled. There is thus no question of relative effectiveness. On the other hand, the structural differences are considerable, and there is room for selection of method, considering simplicity, ease of production, and reliability through obviation of possible irregularities. This last point, reliability, assumes its greatest importance when it is attempted to substitute automatic regulation for the more usual hand control.

EFFECT OF THROTTLE POSITION ON ALTIMETRIC COMPENSATION.

Considering the altimetric control as having been properly set at any altitude, under open throttle, it is important to examine what happens to the mixture ratio as the throttle is closed. Complete altimetric correction involves a fixed percentage reduction in the fuel flows, compared with those occurring at the ground, for all relative loadings.

Having regard for class (1), it is obvious that having made a correct adjustment of the fuel metering area at any one loading, a change in air flow will leave the relationship with ground ratios undisturbed, provided the change in area has not altered the coefficient of discharge of the passage. It can hardly be hoped to accomplish this last with any ordinary or simple form of adjusting structure; and this, together with the extreme sensitiveness of the method, has resulted in its narrow use.

In the type of class (2*a*) controlling the float-chamber pressure, the subatmospheric connection must of necessity enter the air passage of the carburetor as shown in figure 1. But the pressures in the adjutage of the throat do not bear a constant relation to that of the atmosphere with change in air flow.[3] This results in change in the float-chamber pressure under throttle manipulation with any one setting of the control. Admitting that the ground load compensation is correct with the control in the off position, it appears that a varying float-chamber pressure, as at an altitude, will prevent its duplication, since it will change the order of variation of the metering head with change in relative load. The change in adjutage pressure with load is such as to cause a material enrichment of the mixture as the throttling is increased. In class (2*a*), then, the altimetric control must be shifted with the throttle.

Passing to class (2*b*), with regulation of the effective throat area (case *A*, fig. 2), the pressure along the axis in the entrance of the movable tube will be in constant ratio with that in the throat at all densities. As a result, the ground load compensation will be duplicated at any altitude with a single setting of the altimetric control.

Likewise, in case *B* of figure 2, the same result is accomplished if the coefficient of discharge across the auxiliary port, at any set opening, varies directly with that of the main throat passage as the air flow changes. This latter condition can be almost fully realized with suitable design of the auxiliary passage.

At all except the smallest air flows, the control method at *C*, figure 2, will permit of maintenance of the ground load compensation at any altitude, on a fixed setting of the control, since the pressure at the throat at any relative air flow bears a constant relationship to that of the atmosphere. At the smallest air flows at altitudes, the mixture will be richer in fuel than at corresponding ground flows by an amount depending upon the height of the nozzle member above the point of entry of the air stream. This enrichment will be greater the greater the altitude.

EFFECT OF ALTIMETRIC CONTROL ON DIVISION OF FUEL.

A further point which can not be wholly neglected is the effect of the altimetric control upon the fineness of division of the fuel, through alterations of the magnitudes of the forces causing spraying. Of the methods discussed, those at *A* and *B*, figure 2, are the only ones in which use of the control reduces the energy available for spraying. The method at *C*, figure 2, obviously promotes division of the liquid. That of figure 1 leaves the spraying unaltered.

[3] See the curve of pressure loss in carburetor passages accompanying Part III of this report.

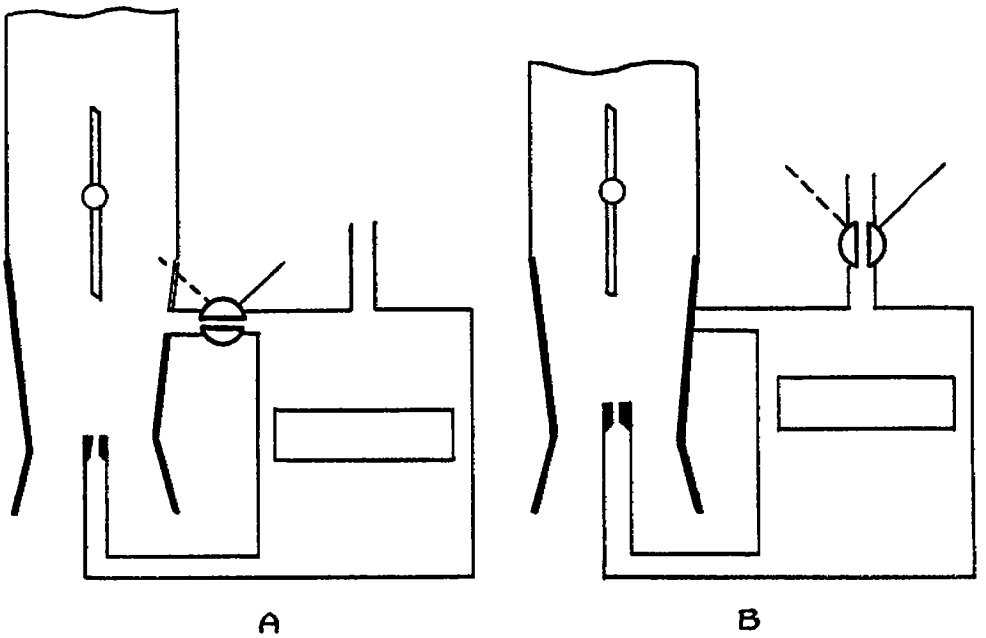

FIG. 1.—Control by regulation of float chamber pressure.

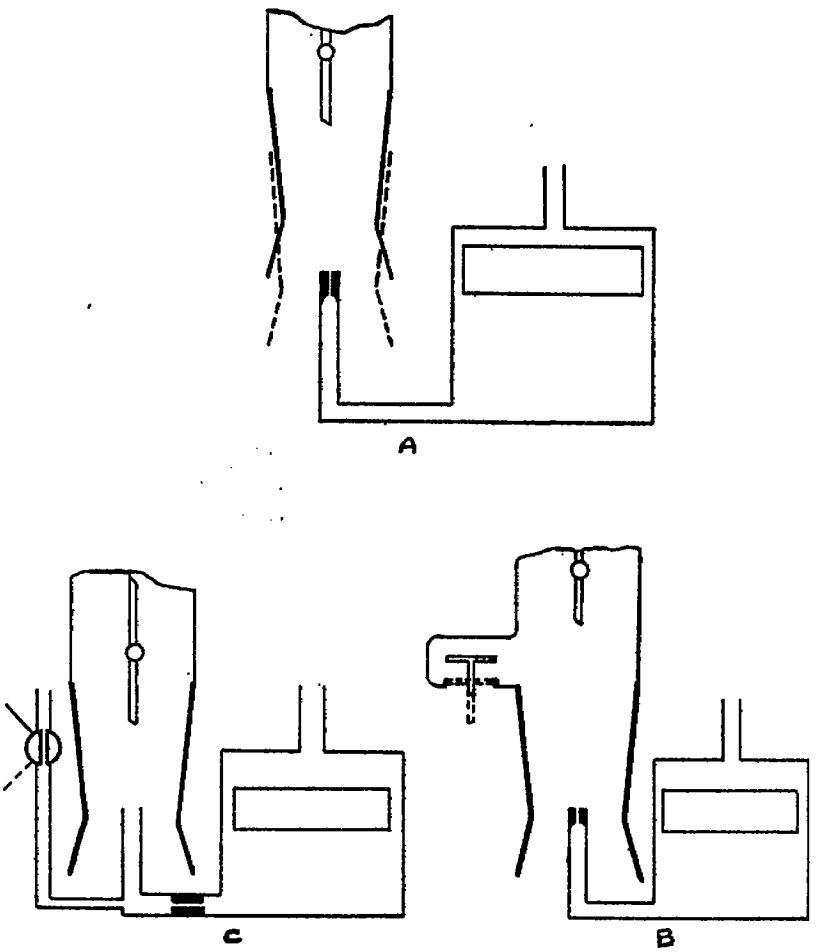

FIG. 2.

CRITICISM OF CONTROL STRUCTURE.

Structurally, the methods involving a small plug valve controlling an air stream (fig. 1, and *C*, fig. 2) are the simplest and most easily produced. Also their regulation is comparatively direct and involves small forces and a minimum of parts. For such reasons, these methods are the ones almost always encountered in service. On the other hand, each requires special manipulation to cover the complete throttling range most advantageously.

The method at *A*, figure 2, possesses the structural disadvantages attendant upon controlled motion of one of the carburetor's major organs. The parts must be made to move freely, and auxiliary members must be included to nullify the effects of lack of balance in the forces to which the controlled member is subjected. This further complicates the structure and makes reliability of performance more difficult to attain, particularly when only small displacing forces are available.

On the above scores, the method at *B*, figure 2, is superior to that at *A*, in that unbalance is easily eliminated by mounting two valves on a single stem, and causing one to open inwardly as the other opens outwardly. This gives the desired result without material complication and with no additional working parts.

A possible disadvantage in this method is the size of the auxiliary air port that must be provided. At an atmospheric pressure equal to one-half that at the ground ($P_x/P_0=0.5$) the uncontrolled or natural mixture will contain 1.415 times the desired amount of fuel. That is to say, the metering head is twice as great as it should be to maintain equality of the mixture ratio with that at the ground. From this it results that one-half the air taken by the engine will be required to pass the auxiliary port under this condition of atmospheric pressure. But since the coefficient of discharge for a passage such as the auxiliary must be, is only about 0.75 that for a carburetor-throat tube, the area of the auxiliary port must be $0.5/0.75=0.66$ of the total passage area through the carburetor, or approximately 1.5 times that of the carburetor throat.

The most serious aspect of unbalanced forces upon the controlled member, or of complicated actuating mechanism, is faced when it is attempted to regulate by automatic means. Here a definite displacement must follow the application of a definite but small force applied by the regulator. But where automatic regulation is employed, it is clearly essential that the load compensation be unaffected, or negligibly affected, by the position of the controlled member. As previously stated, method B, figure 2, is one of the few with which this result is possible.

For the best results throughout a flight, the setting of the altimetric control must be changed in a very definite manner. Thus, automatic regulation of the control will be highly desirable if it can be made to follow faithfully the changes in the surrounding conditions.

Consideration of the relative merits of manual and automatic regulation leads to the conclusion that the latter is the more desirable, even though it does not follow the conditions with absolute faithfulness. This follows from the natural limitations of the manual method of regulation. Here chief reliance must be placed in the indications of the engine tachometer and in the senses of the pilot. This is all very well within certain narrow limits. But under present day surroundings of the pilot it is too much to expect his senses of sound and touch to be of great assistance, even if he has unlimited time in which to act upon their indications. Clearly, also, the engine tachometer as an indicator on the altimetric control leaves much to be desired in attempting a setting for maximum economy. This latter is never attained at maximum R. P. M. on a given throttle opening, and neither is it attained with the poorest mixture that will operate the engine steadily.[4]

AUTOMATIC OPERATION OF ALTIMETRIC CONTROLS

Automatic means that can be made to follow both pressure and temperature changes is not far to seek. A sealed flexible-walled chamber will expand under reduced pressure in its surroundings. Also, it will expand under increased temperature. Since the direction of the

[4] See discussion of requirements for maximum economy in Part V of this report.

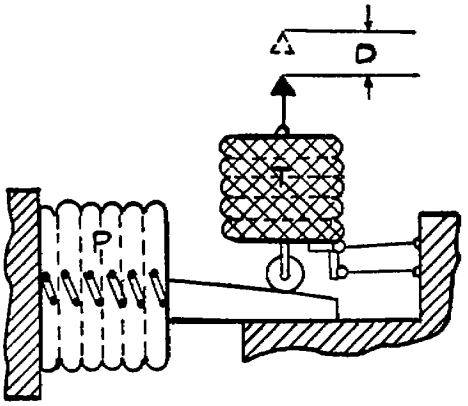

(1) — $D \propto \frac{T_0}{T_x}\sqrt{\frac{P_0}{P_0}}$

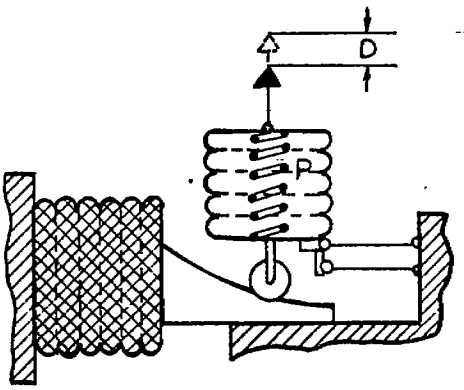

(2) — $D \propto \left(\frac{T_0}{T_x}\right)^2 \frac{P_x}{P_0}$

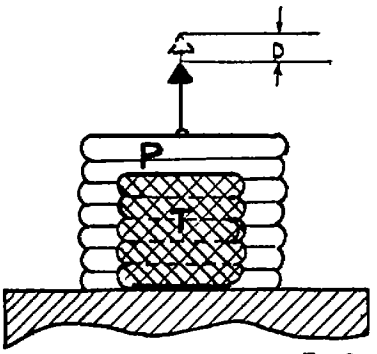

(3) — APPROXIMATION TO

$D \propto \left(\frac{T_0}{T_x}\right)^2 \frac{P_x}{P_0}$

FIG. 3.

required change in the setting of the altimetric control is the same under reduced pressure and under temperature increase, it only remains to design the regulator for deflections to fit the requirementss. Strictly speaking, automatic regulation of this kind can only be applied to a method of control which does not disturb the compensation under throttle.

A representative flexible or extensible chamber, on which to base a discussion, consists of a pair of rigid, circular end pieces between which is sealed a cylindrical metal bellows. Assuming the bellows to contain dry air and to have been sealed at absolute pressure P, and absolute temperature T, equal to those at ground level or zero altitude, the volume of the bellows at an altitude x is $V_x = V_0 \frac{P^0}{P_x} \frac{T_x}{T_0}$. Substituting the length, L, for the volume, since it will be proportional to the latter in this case, the relative change in length of bellows between ground level and altitude x is expressed $\frac{L_x - L_0}{L_x} = 1 - \frac{T_0 P_x}{T_x P_0}$. But the change in orifice area for altimetric correction is $1 - \frac{T_0}{T_x}\sqrt{\frac{P_x}{P_0}}$; and the change in head required is $1 - \left(\frac{T_0}{T_x}\right)^2 \frac{P_x}{P_0}$, to attain the same measure of correction.

In the case where the carburetor air is at constant temperature, the deflection of the control regulator is proportional to the square of the required orifice area correction; and is directly proportional to the required correction in metering head. In the former case, it will be necessary to contour the fuel orifice, or to control its area through some intermediate device, as a cam. In the latter it may or may not be required to use contoured control parts, depending upon the method of control chosen. The methods at A and B, figure 2, lend themselves to operation with only the interposition of direct linkage between the control member and its regulator.

If the carburetor air temperature varies, it is obvious in both cases that the deflection of the regulator will be relatively too little, considering the temperature correction, if it is suitably transmitted and utilized with respect to the pressure changes.

But it is possible in a bellows type regulator to make the change in length virtually independent of one or the other of these changes in its surroundings. If the inclosure is completely exhausted at the time of sealing, its length will be unaffected by temperature changes. In order that it may respond to changes in pressure, it is only necessary to inclose within the bellows a spring reacting with sufficient force to prevent the maximum external pressure to which it is subjected from closing it up completely.

Likewise, such a chamber, completely filled with a liquid, will be negligibly affected as to length by a change in pressure, but will respond to changes in temperature.

Thus, by one of several possible mechanical interconnections or assemblies of units, as in the diagrams of figure 3, it can be brought about that the automatic regulation of the control will be complete. In final consideration of control regulation it may be stated that if the carburetor air temperature varies through comparatively narrow limits, a single air-filled expansible regulating member may give a sufficiently close approximation for most practical purposes.

CONCLUSIONS:

(1) Several control methods may be equally effective.

(2) Automatic regulation of the control is, in general, more desirable than manual regulation.

(3) It is possible to regulate the control automatically to give complete correction of the mixture at all altitudes.