REPORT No. 53

PROPERTIES AND PREPARATION OF CERAMIC INSULATORS FOR SPARK PLUGS

NATIONAL ADVISORY COMMITTEE
FOR AERONAUTICS

PREPRINT FROM FIFTH ANNUAL REPORT

FILE COPY
To be returned to
the files of the Langley
Memorial Aeronautical
Laboratory

WASHINGTON
GOVERNMENT PRINTING OFFICE
1920

NASA Technical Library
3 1176 01416 5402

317.3

REPORT No. 53

PROPERTIES AND PREPARATION OF CERAMIC INSULATORS FOR SPARK PLUGS

NATIONAL ADVISORY COMMITTEE
FOR AERONAUTICS

PREPRINT FROM FIFTH ANNUAL REPORT

WASHINGTON
GOVERNMENT PRINTING OFFICE
1920

REPORT No. 53

PROPERTIES AND PREPARATION OF CERAMIC INSULATORS FOR SPARK PLUGS

Part I.—METHODS OF MEASURING RESISTANCE OF INSULATORS AT HIGH TEMPERATURES

By F. B. SILSBEE and R. K. HONAMAN

Part II.—ELECTRICAL RESISTANCE OF VARIOUS INSULATING MATERIALS AT HIGH TEMPERATURES

By R. K. HONAMAN and E. L. FONSECA

Part III.—PREPARATION AND COMPOSITION OF CERAMIC BODIES FOR SPARK-PLUG INSULATORS

By A. V. BLEININGER

Part IV.—CEMENTS FOR SPARK-PLUG ELECTRODES

By H. F. STALEY

159827—20——1

REPORT No. 53.

PART I.

METHODS OF MEASURING RESISTANCE OF INSULATORS AT HIGH TEMPERATURES.[1]

By F. B. Silsbee and R. K. Honaman.

RÉSUMÉ.

This report describes in some detail the preliminary experiments which were made on the conductivity of spark-plug insulators in order to develop a satisfactory comparative method for testing various materials. The measurements were made at temperatures between 200° and 900° C, and with both alternating and direct current at voltages as high as 2,000 volts.

The results obtained confirmed the experiments of earlier observers at lower temperatures in indicating a very rapid decrease of resistance with increase of temperature in porcelain, mica, fused silica, and similar materials. This decrease is, however, a gradual one and there is no definite temperature at which the material suddenly changes its properties. The results of conductivity measurements can be most conveniently expressed by stating the temperature (T_e) at which the material has the arbitrarily selected resistivity of one megohm per centimeter cube. Table 1 gives the values of this constant for various substances.

The measurement with direct current showed the presence of disturbing polarization effects which make the apparent resistance of the specimen vary with the magnitude and time of application of the measuring voltage. This effect can be eliminated by the use of alternating current in making the measurements and the later work on a wide variety of substances, the results of which are given in Part II of this report, was done by this latter method.

There is a wide field for further investigation of this subject, as the mechanism of conduction in this class of materials is very complex.

INTRODUCTION.

The purpose of this report is to describe some measurements carried out at the Bureau of Standards during the past two years, on the resistance of various insulating materials at high temperatures. This work was undertaken with a view to studying the relative merits of various insulators for use in spark plugs, and in particular to assist the ceramic laboratory of the bureau in developing improved porcelain bodies for this purpose. The method finally adopted as a result of this work for the comparative testing of materials is described briefly in Report No. 51, Part III, the results of a large number of measurements on a wide variety of materials are given in Report No. 53, Part II, and the development of the ceramic side of the investigation is given in Report No. 53, Part III. The present report will be confined to a description of the various phenomena observed in the experiments which led to the method finally adopted.

The electrical and thermal conditions under which a spark plug is required to operate differ considerably with the type of gasoline engine used. Measurements with embedded thermocouples have shown that the temperature of the body of the insulator within the metal shell seldom exceeds 250° C. in water-cooled engines. The tip of the inner end, however, may reach temperatures as high as 900° to 1,000° C. It therefore, appeared desirable to study the resistivity of the specimens in the range of temperature between 200° and 900° C.

[1] This Report was confidentially circulated during the war as Bureau of Standards Aeronautic Power Plants Report No. 18.

The electrical stresses applied to a spark-plug insulator by the average magneto or battery coil ignition system used for firing gasoline engines are quite peculiar and difficult to duplicate in any method of measurement. The cycle of operation (see Report No. 58, Part 1) following the opening of the primary breaker contacts consists of a rapid rise of the potential applied to the spark plug from zero to a value sufficient to break down the spark gap in the engine cylinder. The break-down voltage is of the order of 6,000 volts and is reached in a few hundred thousandths of a second. After this a comparatively low voltage (800 volts) maintains the electric arc between the spark points and lasts for a few thousandths of a second. Since the interval between sparks is of the order of 0.1 second, it will be seen that the average voltage applied over a complete cycle is quite low and has been found to be approximately 150 volts. These peculiar electrical conditions should be kept in mind when considering the various methods of measurement described below.

The materials studied in this investigation included porcelains, glass, steatite, mica, and fused silica, as these constitute the only class of substances sufficiently heat resisting for use in spark plugs. While the detailed studies of polarization, etc., described in this report were made on only a few of the porcelain samples, the same effects seemed to be present to greater or less degree in all cases and the process of conduction is probably similar in all of them. The work of earlier investigators[1] has shown the complex nature of the phenomena, but as yet no complete and satisfactory theory has been worked out to account for them.

APPARATUS AND SPECIMENS.

Most of the work reported in this paper was done on cup-shaped specimens similar to the standard test piece No. 1, adopted by the A. S. T. M., except that the side walls were of uniform thickness. The cross section of this specimen is shown in figure 1. The principal advantages of this type of specimen are:

(1) The conduction takes place through the bottom of the cup, which is of definite and easily measured dimensions.
(2) The large area and small thickness of the bottom insure a relatively large current even with material of high resistivity.
(3) The path over the rim of the cup for any surface leakage is relatively long.
(4) A satisfactory contact can be made between the specimen and the electrodes by immersing the bottom of the cup in a conducting fluid (in these experiments, melted solder) and by inserting some of this fluid inside the cup to form the upper electrode.

These cup specimens were used in the furnace shown in figure 2. The heating coil inserted in the plug below the specimen was found necessary to compensate for the flow of heat through the bottom of the furnace. By proper adjustment of the relative amounts of current through the main winding and through this additional coil, the temperatures inside and outside the cup could be equalized. These temperatures were measured by two copper-constantan thermocouples, one of which was inserted in a closed porcelain tube which dipped below the surface of the solder in the interior of the cup, while the other was embedded in the steel cup containing the solder below the specimen. Readings of the resistance were taken only when these two thermocouples showed substantially equal temperatures.

In cases where cup specimens were not available, measurements were made on assembled spark plugs, and also on spark-plug insulators, and on short pieces of tubing. In these cases the conduction took place between a central electrode and either the shell of the spark plug or a band of platinum deposited around the center of the outside of the insulator or tube. The measurements with this type of specimen were definite in indicating the resistance of the specimen, but owing to the uncertainty as to the area of contact and the location of the lines of current flow it is difficult from such data to compute with accuracy the true resistivity of the material.

[1] Gray, T., Phil. Mag. ser. 5, vol. 10, p. 226, 1880.
Haworth, H. F., Proc. Roy. Soc. Lond. A 81, p. 221, 1908.
Somerville, A. A., Phys. Rev. 31, p. 261, 1910.
Campbell, Nat. Phys. Lab. 11, p. 207, 1914.
Kinnison, C. S., Proc. Am. Ceramic Soc. 17, p. 422, 1915.
Poole, H. H., Phil. Mag. 34, p. 195, 1917.
Brace, P. H., Trans. Am. Electrochem. Soc., May 5, 1918.

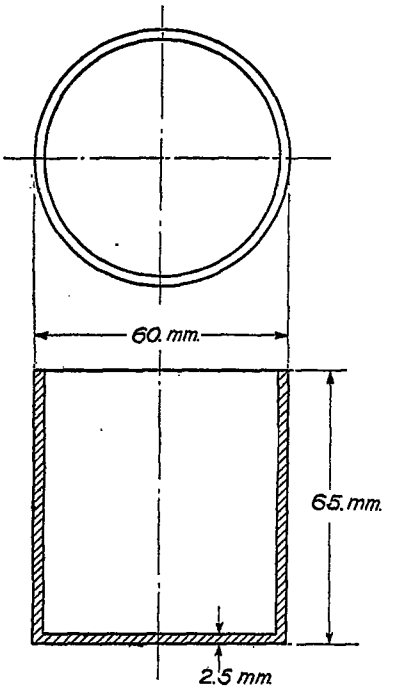

FIG. 1.—Porcelain test specimen.

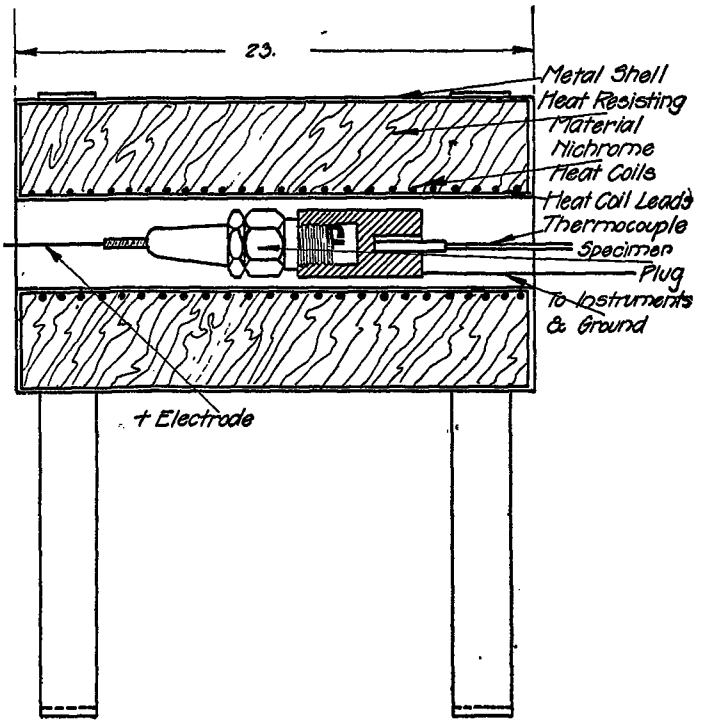

Fig. 3.

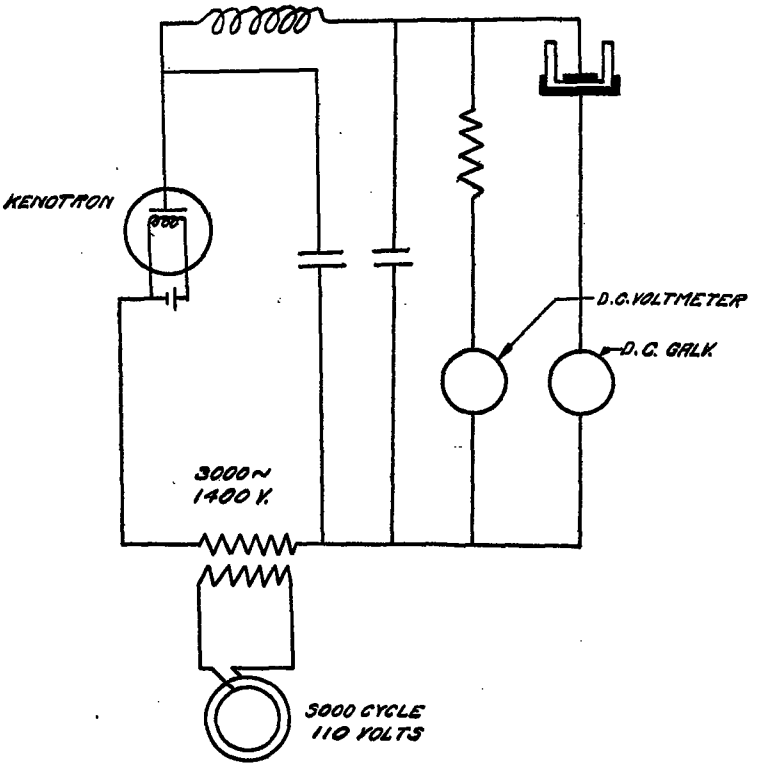

FIG. 4.—Connections for high voltage D. C. measurements.

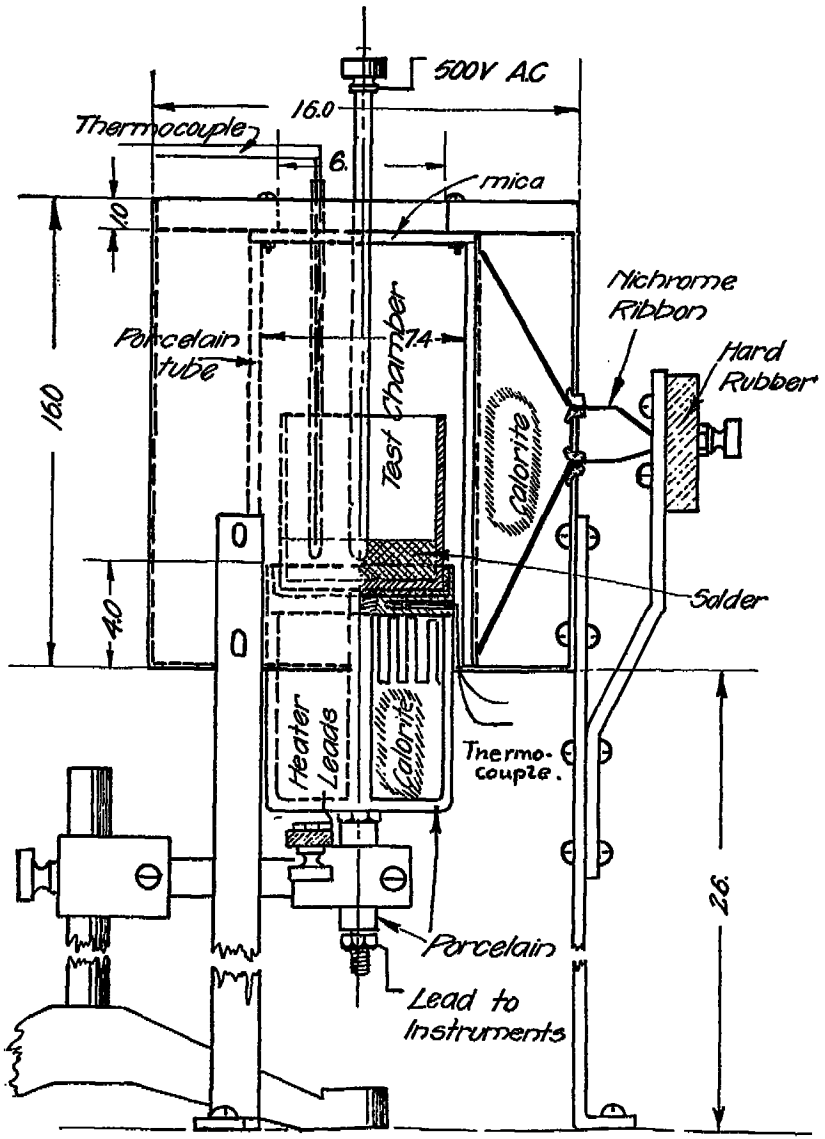

Fig. 2.

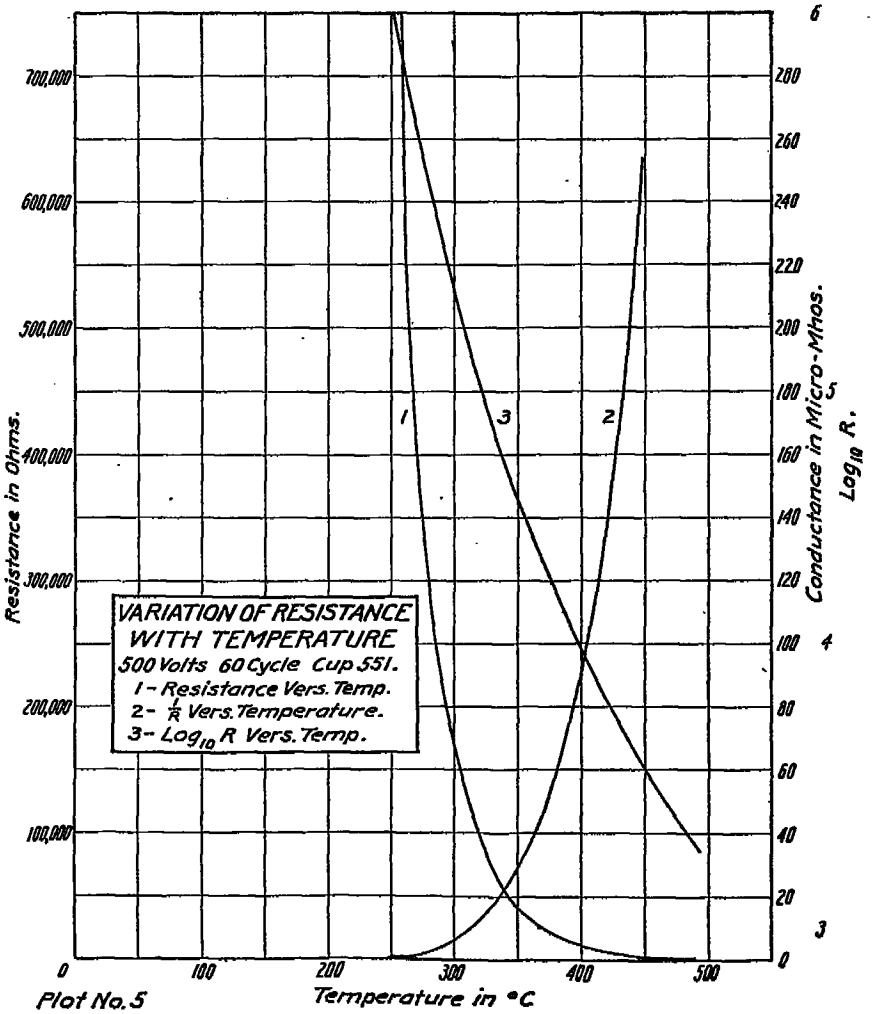

Plot No. 5

For specimens of this shape the electric furnace shown in figure 3 was used, and temperatures were indicated by a single thermocouple placed in an iron plug which supported the specimen.

For reducing the results of either type of specimen from the observed resistance to a basis of the resistivity of the material the factors connecting these two quantities were computed from the dimensions of the specimens. The resistivity is obtained by multiplying the observed resistance by the factor K, where for the cup specimen

$$K=\frac{\pi\, d^2}{4\, t} \tag{1}$$

and d is the diameter of the bottom of the cup and t the thickness of the cup in centimeters. For the tubular specimen

$$K=\frac{2\pi\, l}{2.30 \log_{10}\frac{R_2}{R_1}} \qquad \text{(approx. 2)}$$

where l equals the length of the external conducting band measured parallel to the length of the specimen, and R_2 and R_1 are, respectively, the external and internal radii of the insulator.

In most of the work the resistances were measured by reading a voltmeter connected across the specimen and an ammeter in series with it and taking the quotient of these values as the resistance. As will be seen from the following, a wide variety of sources was used to provide the applied voltage, and the indicating instruments were correspondingly varied in character.

VARIATION OF RESISTANCE WITH TEMPERATURE.

The first experiments were carried out with an applied direct-current voltage of about 2,000 volts, which was obtained by rectifying with a kenetron a 3,000-cycle voltage supplied from a step-up transformer. The connections used to obtain this rectification and to reduce the fluctuations in the resulting continuous voltage are shown in figure 4. This rather complicated system was chosen in an attempt to duplicate to some extent the voltages existing in ignition systems, and, although this source of voltage was later abandoned, the data obtained with it brought out the salient facts in regard to this type of conduction. The most striking of these facts, as verified by other measurements made later, is the very rapid decrease in resistance of the specimen with increase in temperature. This variation amounts to aproximately 2 per cent per degree centigrade at all temperatures. If the results are expressed by plotting resistance *vs.* temperature, or conductance *vs.* temperature (see plot 5), the resulting curves are so steep as to render it impracticable to express the data over an extended temperature range by a single curve. It is found, however, that by plotting the common logarithm of the resistance against temperature, as is done in curve No. III, plot 5, and in plot 6 a convenient line of slight curvature is obtained. It will be seen from this plot that if this curvature is neglected, the results can be represented approximately by the equation

$$\text{Log}_{10}\, R=a-b\, t \tag{3}$$

This method of expressing the results is very convenient in reducing the data to a basis of resistivity, since combining the relation

$$\rho=K\times R \tag{4}$$

with equation (3) one obtains

$$\text{Log}_{10}\rho=a+\log_{10}K-b\, t=c-b\, t \tag{5}$$

In this equation b and c are constants of the material and are independent of the shape and size of the specimen used. Unfortunately, however, the values obtained for one of these constants depends very markedly upon the other, so that a slight error in one will cause a compensating change in the other. They are, therefore, not well suited for comparing the relative merits of the different materials and for this latter purpose it has been found convenient to compute an "effective temperature" (T_e), which is defined as the temperature at which the

material has the arbitrarily selected resistivity of 1 megohm per centimeter cube, and which may be computed from the equation

$$T_e = \frac{c-6}{b} \tag{6}$$

This value of T_e ranges from 350° in the poorer grades of porcelain up to 800° for fused silica, and is a convenient index of the value of the material as an insulator at high temperatures.

An inspection of these resistance-temperature curves shows a complete absence of any critical temperature at which the material undergoes an abrupt change in its resistance. This shows the error of the commonly accepted idea that porcelain breaks down and becomes conducting at a definite temperature. This belief probably originated from experiments in which the temperature of a porcelain sample was gradually raised while being continuously subjected to an applied voltage. The effect of the current flowing through the sample in such cases would be entirely negligible up to a certain temperature at which the power $\left(\frac{E^2}{R}\right)$ supplied by the measuring current became comparable with the rate at which heat could be dissipated to the surroundings. Owing to the very rapid rate of change of resistance with temperature, a very slight further increase in temperature would materially decrease the resistance and consequently increase the $\left(\frac{E^2}{R}\right)$ loss. Unless the specimen was in a position to give off heat freely to its surroundings the temperature would rise rapidly, causing a further decrease in resistance, thus leading to an unstable state which would rapidly cause the fusion of the material and the passage of an arc. The rapidity of change of resistance with temperature makes this point of instability quite definite, provided all the conditions of the experiment are maintained constant, but this apparent critical temperature will depend very greatly upon the contact between the specimen and the furnace, upon the applied voltage, and the other conditions, so that this is in no sense a specific property of the material.

The magnitude of this heating effect is exemplified by the behavior of a porcelain sample tested when hot—for example, at 500° C. At this temperature, the resistance of a centimeter cube of ordinary porcelain is about 100,000 ohms, and if a voltage of only 500 volts per millimeter (i. e., only about one-twentieth of that required to puncture it while cold) be applied, the current flowing will be 50 milliamperes and the power dissipated in the sample will be 250 watts. This will suffice to raise the temperature of the sample at a rate of about 100° C. per second and will cause its rapid destruction.

This heating of the specimen by the measuring current was observed on numerous occasions when making tests at 2,000 and 1,000 volts, and in each case the samples on removal from the furnace were found to contain one or more spots where the porcelain had been fused into a glass by the intense local heating. In the later work at lower voltage this effect was not present, and readings were taken only when the current was substantially constant.

POLARIZATION.

The early measurements with high voltage direct current showed a number of puzzling discrepancies, such as a variation of the apparent resistance with the voltage used in making the measurement and with the time of application of this voltage. Plot 7 shows this variation of resistance with voltage as observed with a porcelain cup specimen. Such discrepancies indicated the presence of an additional phenomenon to be reckoned with, which in the absence of definite knowledge as to its origin was called "polarization," and will be so referred to throughout this report.

The fundamental manifestation of this so-called polarization is that if a constant direct-current voltage be applied to a specimen, the resulting current will decrease at first rapidly and then more gradually, as is indicated in plot 8. The reduction in current is often equivalent to an increase in resistance by a factor of 10 or 20. If the specimen is allowed to remain at a high temperature but without applied voltage for some time, the effect gradually disappears, but a considerable time is required to accomplish this. The disappearance is more rapid at

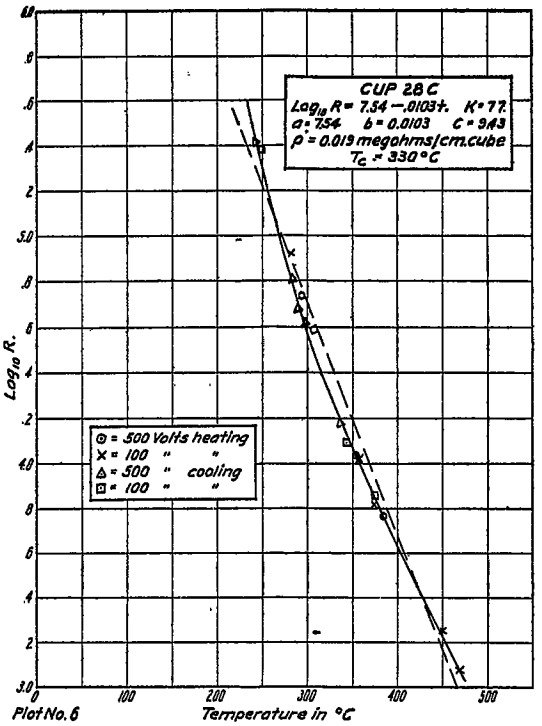

Plot No. 6

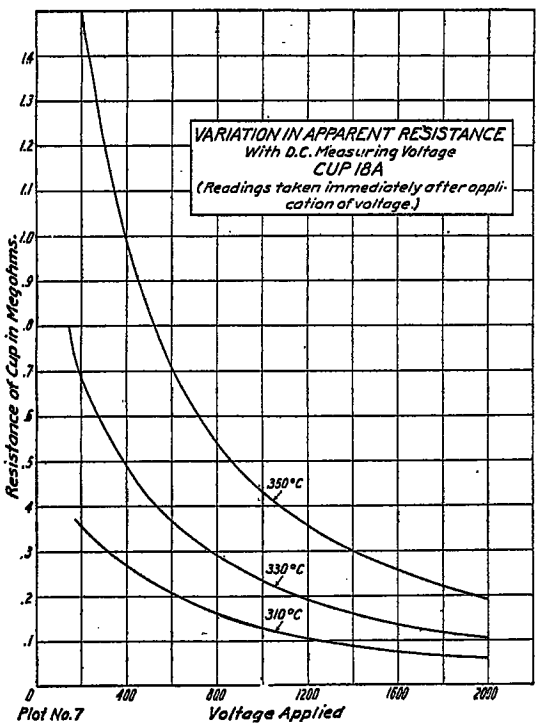

Plot No. 7

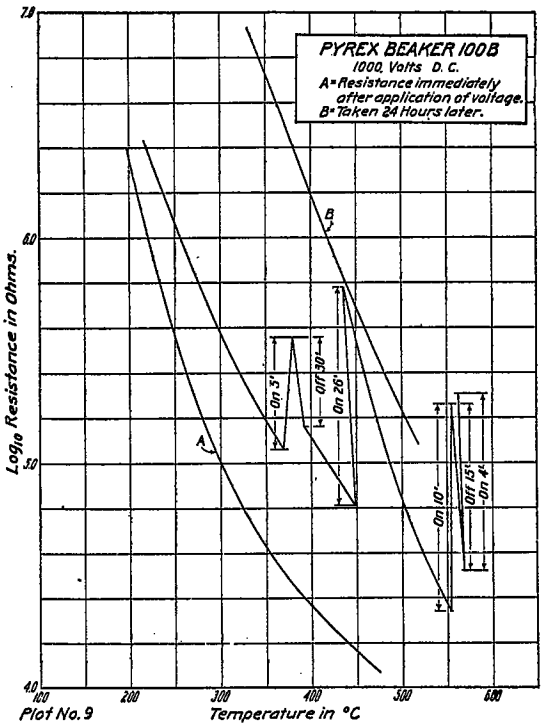

Plot No. 9

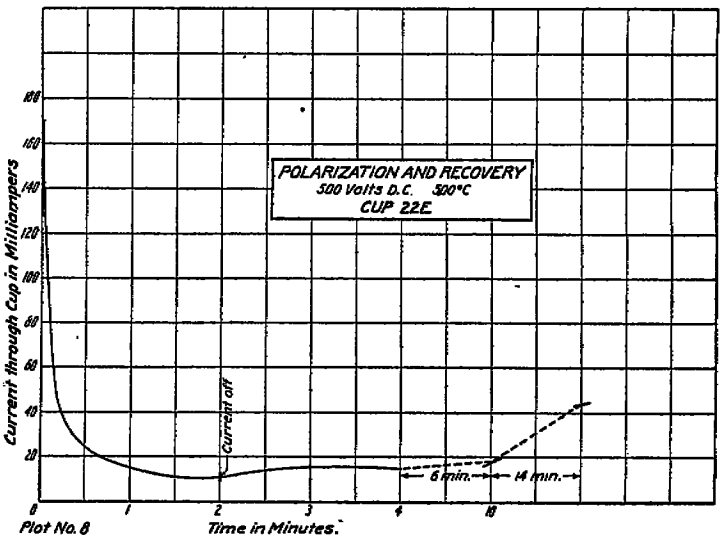

Plot No. 8

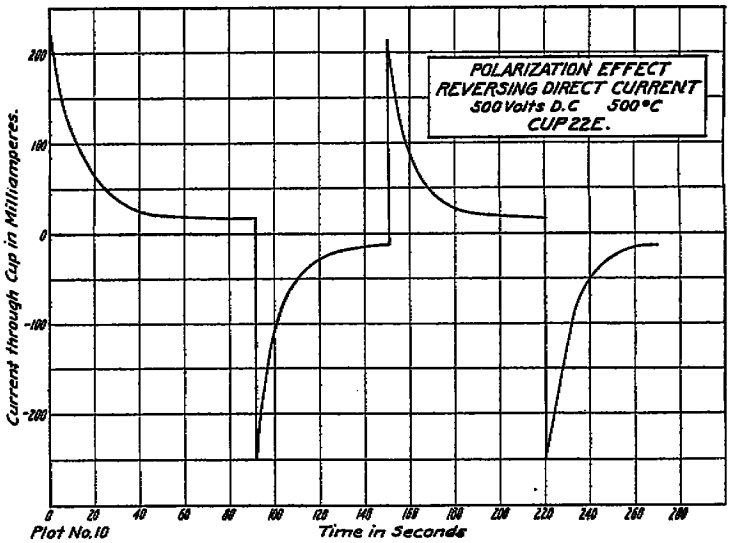

Plot No. 10

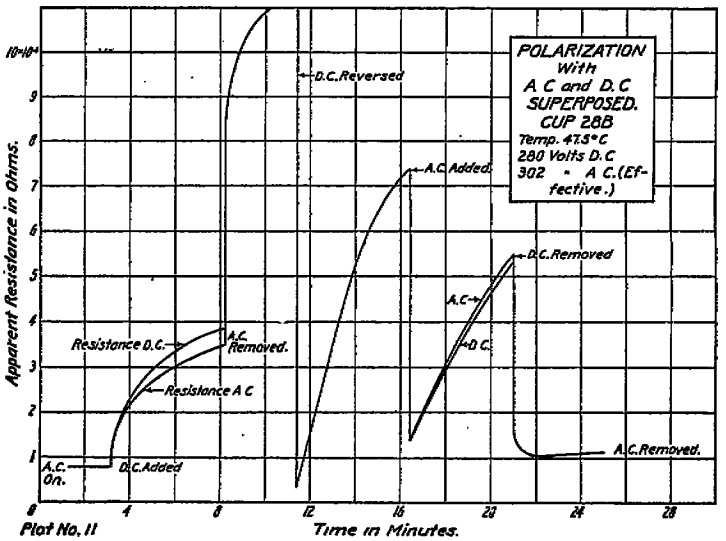

Plot No. 11

high temperatures than at low. Plot 9 gives a record of the variation of the apparent resistance of a glass beaker, as measured with 1,000 volts direct current, after various applications and removals of the measuring potential. The course of the experiment is indicated by the arrows, and the duration of each period of application or of rest is indicated on the curve. The lowest and highest curves give the resistance as observed with very short application of the testing voltage just prior to the polarizing test and on the following day, respectively. The apparent permanent increase of resistance observed with this specimen serves to explain some mysterious results obtained at an earlier date, in which one specimen had shown an increase of resistance to more than twenty times its initial value after several successive tests. The fact that an appreciable time is required to obtain a reading, even with quick acting direct current indicating instruments, and that during this time the specimen is being polarized, is probably a complete explanation of the variation of apparent resistance with applied voltage, shown in plot 7. If the applied direct-current voltage is suddenly reversed after a specimen has become polarized to a considerable extent, the initial current in the new direction is found to be approximately equal in magnitude to the original current and much greater than the value immediately preceding the reversal. (See plot 10.) This implies a counter E. M. F., and an attempt was made to observe such an effect by connecting an electrostatic voltmeter across the specimen. No residual deflection of this meter was observed when the supply current was removed, even after long-continued polarization of the specimen. This result is to some extent in contradiction to facts mentioned by other observers.[2]

A magneto having alternate distributor points of the same polarity connected together was also used as a source of voltage and the polarizing effects found to be in every way similar to those obtained with a steady direct-current source of the same average voltage (150 volts).

When alternating current is applied to a fresh specimen, there is no polarizing effect and the current remains constant indefinitely, except when the current is so large as to produce heating of the specimen. When alternating current is applied to a specimen which has been previously polarized by direct current, the polarization disappears at a more rapid rate than if the alternating current had not been applied.

An attempt to throw light on these complex phenomena was made by applying alternating and direct current simultaneously to a specimen. This was accomplished by connecting a transformer in series with a generator. By opening the primary circuit of the transformer, or the field of the generator, either source of E. M. F. could be eliminated without opening the circuit or interfering with the current flow from the other source. The alternating-current voltage was measured across the transformer terminals with a moving iron voltmeter, and the direct-current voltage by a d'Arsonval type direct-current voltmeter across the generator. The alternating current through the specimen was passed through the moving coil of an electrodynamometer, the fixed coil of which was excited by an alternating current of constant magnitude and in the same phase as the alternating voltage applied to the specimen. The direct current through the specimen was measured by a direct-current milliammeter connected in series with the specimen and the dynamometer. With this arrangement, each pair of instruments measured only its particular component of the resultant current and voltage and was not affected by the presence of the other component. Plot 11 shows the variation with time during the course of the experiments of the resistances as computed from the two components of the current. In this experiment the maximum value of the alternating-current voltage was greater than the direct-current voltage, so that the resultant voltage applied to the specimen reversed in sign during each alternation. Other experiments, in which the maximum alternating voltage was less than the direct-current voltage, and the resultant voltage was consequently unidirectional, showed substantially the same effects.

Throughout the experiments the temperature was held as nearly constant as possible, but a gradual drift of resistance will be noticed which can be accounted for by a slight change of temperature. It appears from these results that the resistance of the specimen is substantially the same for both the alternating and direct current for all states of polarization.

[2] Maxwell, J. C., Electricity and magnetism, § 271, vol. 1, p. 393, 3d ed.

Or, in other words, the polarization produced by the direct current offers resistance to the passage of the alternating current and the depolarization produced by the alternating current reduces the resistance offered to the passage of the direct current.

When alternating current alone was applied to a fresh specimen, the power factor of the circuit was found to be substantially unity. If, however, the specimen had recently been polarized by the application of direct current, the power factor was somewhat reduced; values as low as 0.9 having been observed.

The data described above are quite insufficient for the development of any complete theory of this polarization, but it would appear that the assumption of a counter E. M. F. is ruled out both by the experiments of combined alternating and direct current and by the difficulty of imagining a mechanism capable of producing a counter E. M. F. of the order of several thousand volts, which would be required to produce the observed decrease of current. A possible explanation may be developed on a basis of the migration away from one electrode, of the ions carrying the current, thus leaving a scarcity of carriers for the further passage of current in the original direction, but providing a plentiful supply for currents in the reversed direction. Another suggested explanation is the formation of resisting films which may cover a considerable part of the area of the electrodes but which are readily removed by electrolysis on reversal of the current. Tests made using platinized surfaces as electrodes instead of the melted solder showed no difference of behavior. It may be noticed in this connection that when the samples were removed after cooling, the solidified solder adhered firmly to both surfaces of the cups which had been treated with direct current, but could be very readily peeled off from specimens which had been tested on alternating current.

DISCUSSION OF METHODS FOR MEASURING RESISTANCES.

As a result of the data obtained in the preliminary experiments just described, it was decided to adopt as the most satisfactory method for the rapid comparison of different types of insulating materials the volt-ameter method, using alternating current. Under these conditions the observed resistance is substantially independent of the frequency, voltage, and time of application, and the convenient values of 60 cycles and 500 volts were adopted for the later work. Plot 6 shows typical results obtained by this method and indicates the agreement attainable on successive runs even at different voltages. It should be remembered, however, that the results thus obtained are for the material in the unpolarized state, and, when in actual use in ignition systems, the material may show a much higher resistance to the unidirectional impulse from the magneto.

Of other possible methods for such work, a bridge method using direct current would be objectionable because of the variable amount of polarization which would occur. Attempts were made to use alternating current as a source, but the measurements are complicated by the effect of stray capacities shunting the high resistances which are necessary, and the time required to obtain a balance on the bridge is a serious drawback because of the rapid change in the resistances to be measured with even slight drifts of temperature.

The megger, while extremely rapid and convenient, is open to the disadvantages of polarization and to the fact that the voltage supplied varies very considerably with the resistance of the specimen under test.

The use of a magneto in place of alternating current as a source has the great advantage that it approximately duplicates the conditions of operation in the engine. The magneto, however, is very variable in its ouput, both from instant to instant and as a result of permanent changes in the magnets, contact points, etc. Moreover, there is an abrupt change in the operation of the machine when the resistance of the specimen becomes so low as to cause the spark in the safety gap to cease, and also the total variation of the current delivered with various resistances in the circuit is comparatively slight with this type of machine.

A method involving the measurement of the rate of loss of charge from a condenser connected in parallel with the specimen has been used by Cunningham. This method imitates the conditions of operation much more closely than does the alternating current method, but

not as perfectly as the use of a magneto as a source. The principal objections are the very delicate string electrometer which is required and the necessity of recording the results photographically.

TYPICAL RESULTS AND CONCLUSION.

The following table gives the results obtained by the use of the alternating current method on a number of types of samples, the significance of the various constants being the same as those defined previously.

TABLE 1.

Material.	C	b	T_c	ρ at 500° C.
			°C.	
Fused silica	11.8	0.0065	890	340.10^6
Best porcelain tested	11.2	.0066	790	80
Typical mica plug	12.1	.0085	720	70
Average of three aviation porcelains	11.5	.0085	650	40
Average automobile porcelain	10.2	.0085	490	.80

These figures show a wide variation in the resistance of the different materials but a rather surprising similarity in the constant b, which is a measure of the temperature coefficient of their resistance. It should be mentioned in this connection that while successive measurements with alternating current on a single specimen give results repeating to a few per cent, yet measurements on different specimens of material which are supposed to be identical show wide variations in resistivity, amounting in some cases to a factor of 10. This fact tends to indicate that the conduction is due to a considerable extent to the presence of small amounts of impurities which may vary greatly in amount without appreciably affecting the composition of the material as a whole.

It appears from the above data that the alternating current method developed is very practical and convenient for comparative measurements on samples of this character, but there is a very wide field of investigation concerning the phenomenon of polarization and much interesting work may be done in developing theories as to the precise mechanism by which conduction is carried on in this class of materials.

REPORT No. 53.

PART II.

ELECTRICAL RESISTANCE OF VARIOUS INSULATING MATERIALS AT HIGH TEMPERATURES.[1]

By R. K. Honeman and E. L. Fonseca.

RÉSUMÉ.

In very hot high-compression engines spark plugs may fail because the core becomes a conductor of electricity. The ignition current then flows through the body of the plug instead of causing a spark at the terminals. The data given in this report show the characteristics of various porcelains and other materials in this respect. These data include values for a large number of plugs now on the market and also various experimental porcelains produced in the laboratory and covering a wide variety of compositions.

To secure definite and repeatable results on this property, it was found necessary to make the measurements with alternating current, using a 500-volt, 60-cycle supply. In this way the disturbing effect of polarization, etc., is avoided. The conductivity of this class of materials increases very rapidly with temperature according to the law of compound interest at a rate of about 2 per cent per degree centigrade.

The most convenient basis of comparison for different materials is the "effective temperature" (T_e) to which they must be heated in order to reduce their resistivity to a definite value. This value is arbitrarily taken as one megohm per cm. cube. A spark plug of normal design with material of this resistivity would have a resistance of about 200,000 ohms. This value is only slightly above the limit at which the usual ignition system can be counted on to fire a plug. The effective temperature thus defined varies from 870° C. in case of fused quartz (the best material tested) down to 280° C. for some kinds of glass. Porcelains have been developed at the Bureau of Standards ceramic laboratory which have an effective temperature as high as 800° C. Certain bodies recently developed for use in aviation engines have temperatures of about 650° C., while the majority of spark-plug porcelains have 500° C. A material having T_e less than 400° C. should be used only when the design of the plug is such that the insulator is extremely well cooled.

INTRODUCTION.

The measurements described below form a part of the investigation of spark plugs undertaken by the Bureau of Standards. A number of cases were reported of spark-plug failures which occurred under conditions suggesting that the insulating material had become conducting at the high temperatures existing in aviation engines, and an extensive study of this phenomenon in various insulating materials was undertaken. Later information combined with data accumulated in the laboratory indicates that this cause of spark-plug failure is not as common as was at first thought, but may occur in very hot engines. The suitability of a material for use in spark plugs should therefore not be judged solely on its insulation resistance while hot.

The ceramic laboratory of the bureau, in connection with this work, undertook to develop an improved type of porcelain which should be more satisfactory for use in spark plugs. As a basis for this a large number of samples of porcelains of various composition were made up so as to obtain data over as wide a field as possible, with the idea of correlating the physical properties of porcelains with their compositions and heat treatment and of obtaining data of value for many lines of work. The ceramic side of this undertaking is described in Part III of this report.

[1] This Report was confidentially circulated during the war as Bureau of Standards Aeronautic Power Plants Report No. 19.

The early measurements of electrical conductivity, which were made with direct current, showed the existence of very complex phenomena, such as polarization, etc., and it was found necessary to develop an alternating-current method for testing the specimens. The various phenomena observed during the development of this method are discussed in detail in Part 1 of this report, and in what follows only the method finally adopted and the results obtained by it will be given.

METHOD OF MEASUREMENT.

The specimen of insulating material to be tested is heated in an electric furnace to the desired temperature. Sixty-cycle alternating current at 500 volts is impressed upon the specimen between two suitable electrodes. A voltmeter connected between these electrodes and an ammeter in series with the specimen are read simultaneously and the quotient of effective voltage divided by effective current is taken as the resistance.

Since the current through the specimen is rather small, a very sensitive milliammeter is required and in most of the work it is found most convenient to use for this purpose a dynamometer wattmeter. The fixed coil of this wattmeter is excited by a known current from the same source of supply as the test current through the specimen. The moving coil of the wattmeter is connected in series with the specimen. Such an arrangement provides a higher sensitivity than can be attained with commercial milliammeters, and is also convenient in the great range of currents which can be measured by using various exciting currents. The connections used in this test are shown in figure 1.

Measurements made by this method on the same sample are found to give results agreeing to a few per cent when different voltages, frequencies, and times of application of the measuring current are used. This method has been adopted by the Bureau of Aircraft Production and is recommended in their specification No. 28,017.

Two types of test specimen have been used in this work. For the accurate measurement of the conductivity of the material, a cup specimen, similar to the American Society for Testing Materials, standard test piece No. 1, is very convenient, though it is not essential that the side walls of the cup be tapered. Figure 2 gives a cross section of this type of specimen.

The test cup is filled to a depth of about 2 cm. (0.8 inch) with melted solder, which forms one electrode, and is in turn set in a slightly larger shallow steel cup containing melted solder, which forms the other electrode. This arrangement insures good contact between the electrodes and the porcelain. To avoid cracking the cup it is, of course, necessary to insert the solder in the solid form and melt it by gradually increasing the furnace temperature. Figure 3 shows the arrangement of the cup specimen in the furnace. Two thermocouples protected by porcelain tubes are inserted in the solder in the test specimen and in a hole in the steel cup, respectively. Measurements of resistivity are made only when these two couples indicate substantially the same temperature.

In cases where cup specimens are not available, actual spark plug insulators are tested, using the central electrode as one terminal and the shell of the spark plug as the other. In cases where the insulator is removed from the shell, a band about 2 cm. (0.8 inch) wide at the center of the length of the insulator was coated with platinum by painting it with a solution of platinic chloride ($PtCl_4$) in oil of cloves and then heating the deposit to reduce the chloride to metallic platinum. This platinum belt is used as the outer terminal, and makes good contact with the insulator. The specimen is then inserted, as shown in figure 4, in an electric furnace, in which the temperature is indicated by a thermocouple placed in contact with the shell of the plug.

Measurements obtained on these plug specimens are accurate as indicating the resistance of the specimen, but owing to the irregular shape and the uncertainty as to the area of outer electrode in actual contact with the porcelain they are not suitable for accurately measuring the resistivity of the material. We have, however, computed, from the usual formula [1] for

[1] For concentric cylinders of length L and diameter d_1 and d_2 the factor connecting resistance and resistivity is

$$K=\frac{2\pi L}{\left(\mathrm{Log}_{10}\frac{d_2}{d_1}\right)2.3}$$

For the cup specimens of diameter D and bottom thickness t

$$K=\frac{\pi D^2}{4t}$$

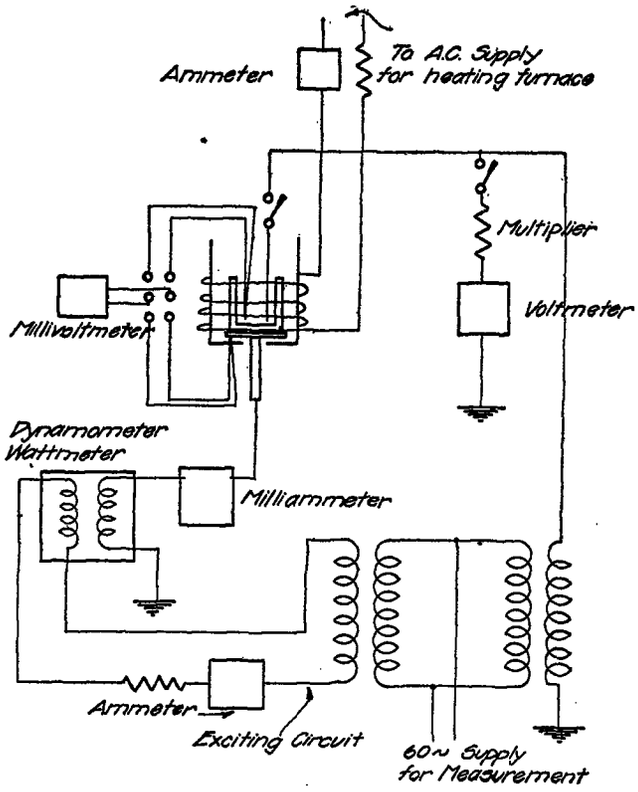

FIGURE 1.

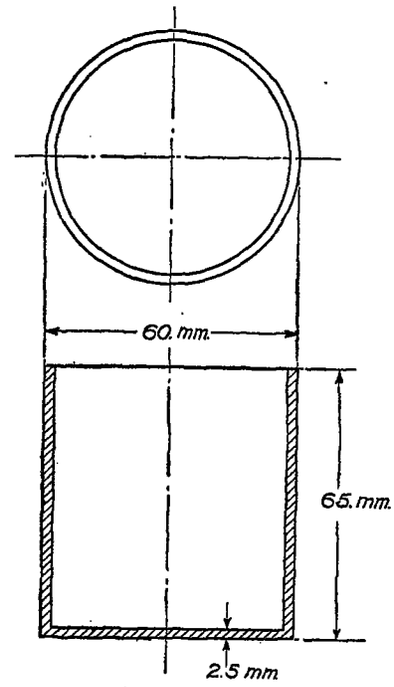

FIGURE 2.
PORCELAIN TEST SPECIMEN.

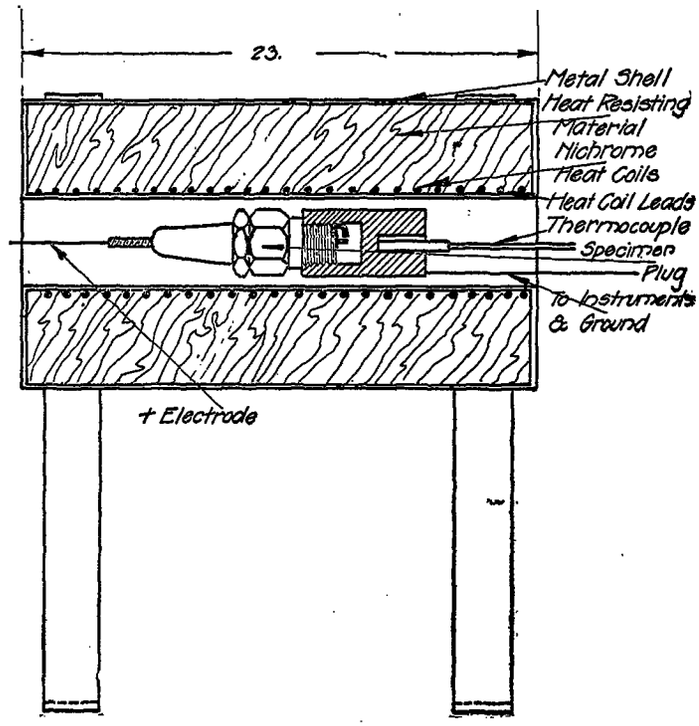

FIGURE 4.

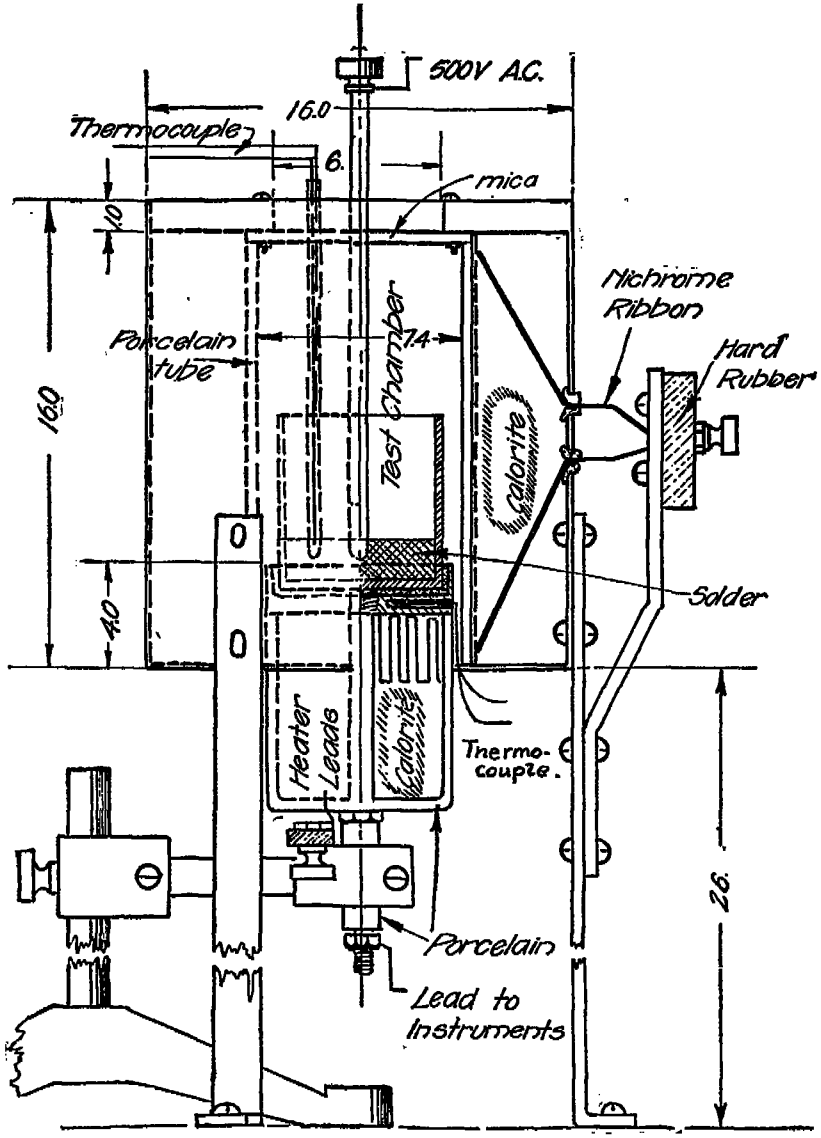

FIGURE 3.

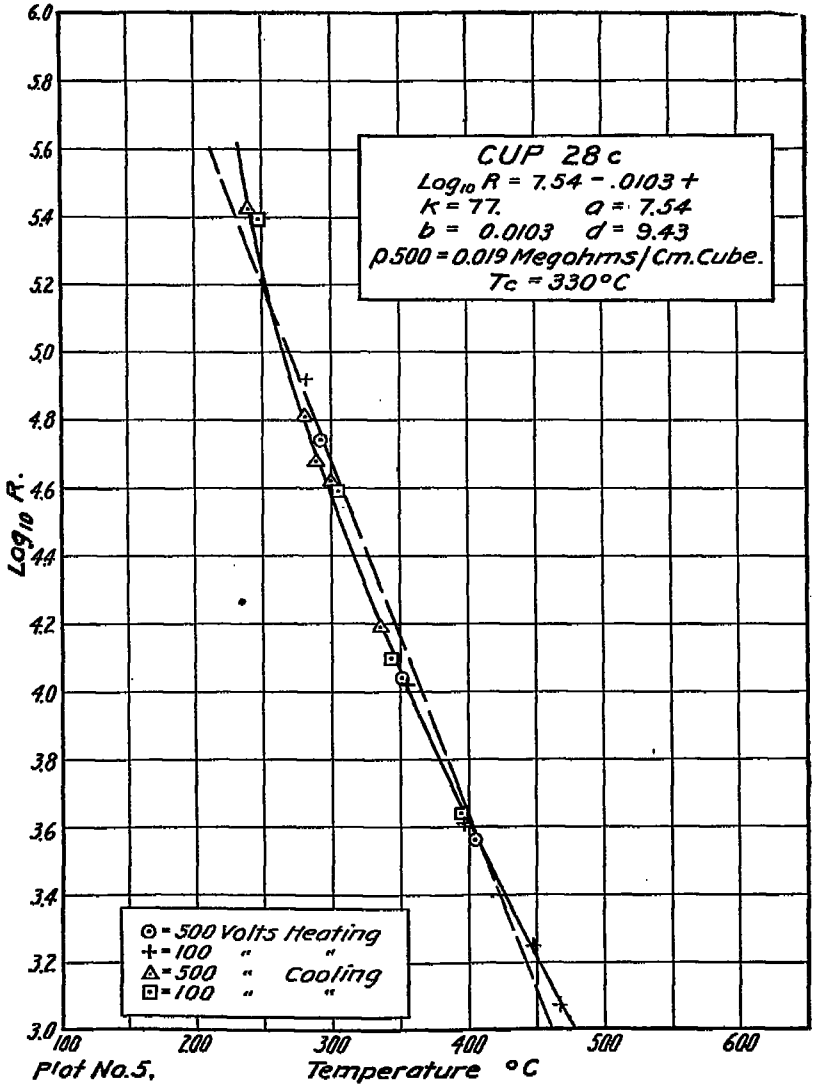

Plat No.5.

current flow between concentric cylinders, the factor K, by which the resistance must be multiplied to give the resistivity of the material, and from this factor have computed the resistivities of the plugs, which are given in Tables IV and V. In this computation it has been assumed that contact was made over the entire surface covered by the shell of the plug, and consequently the values of resistivity computed on this basis are too high if this contact be imperfect. It should also be noted that the path for surface leakage is much shorter in the case of the plug specimen, and also that if the glaze is of poorer material than the body conduction through this glaze will reduce the apparent resistivity. In the cup specimen, on the other hand, the area of contact and thickness of the bottom of the cup are definite and easily measured, and any possible leakage path is very long.

COMPUTATION OF RESULTS.

The change of resistivity with temperature for the class of materials tested is so rapid that it is impracticable to plot resistivity vs. temperature directly, as a scale which is suitable at one end of the temperature range becomes extremely crowded at the other. It has been found, however, that by plotting the logarithm of the resistivity against the temperature a smooth curve slightly concave upward is obtained. The curvature of this plot is quite small, and the data can be represented within the range of temperatures used with sufficient accuracy by a straight line [1] which most nearly fits the observed points. Plot 5 shows a typical curve obtained on a cup specimen and also shows the agreement to be expected on repeating the observations on the *same* sample even at different voltages.

The points on the straight line give the relation

$$\text{Log}_{10}R = a - b\,t \tag{1}$$

where R is the resistance of the specimen in ohms and t the temperature in degrees Centigrade, while a and b are constants of the curve. Introducing the factor K mentioned above, we obtain

$$\text{Log}_{10}\rho = a + \log_{10}K - b\,t = c - bt \tag{2}$$

where ρ is the resistivity in ohms per centimeter cube and c a new constant of the material which is obtained from a by the equation

$$c = a + \log_{10}K \tag{3}$$

c and b depend upon the material only and not upon the shape or size of the particular specimen, and from a knowledge of these constants ρ can be computed for any temperature by equation (2). Unfortunately neither c nor b is very convenient as a figure of merit for the material, since a slight error in either will greatly affect the value of the other. We have, therefore, found it advantageous to compute for each material ρ_{500}, which is the resistivity of the material at 500° C. Another still more convenient figure of merit is the temperature at which the material has the definite resistivity of one megohm per centimeter cube.

This can be computed by the equation

$$T_e = \frac{c-6}{b}$$

This value is given in the following tables for each material, and is the most satisfactory criterion of its value as an insulator at high temperatures.

A physical interpretation of the fact that the results when plotted logarithmically give a straight line can be obtained by considering that the conductivity increases with temperature, according to the law of compound interest, at a rate of about 2 per cent (2.3b) per degree Centigrade. The cumulative effect of the compounding is such that an increase in temperature of 100° corresponds in the average material to an increase in the conductivity of 600 per cent.

[1] A slight error is theoretically introduced by this method of representing the results, since the poorer materials are tested at lower temperatures, where the curve is steeper. This is entirely negligible for the purposes for which the results are to be used.

TABLES.

The results of the measurements are given in the tables below. In each table the first column contains a description of the material, the second column gives a number arbitrarily assigned to the specimen for laboratory references, and the remaining columns the value of the constants b, c, T_e, etc., defined in the preceding section.

Table 1 gives the results on the experimental porcelains made up in the ceramic laboratory of the bureau. The composition, heat treatment, etc., corresponding to each of these specimens, is given in Tables 6 and 7.

Table 2 gives similar data on cup specimens which have been submitted by various porcelain manufacturers in connection with their development work.

Table 3 gives results on various other materials which were obtained in the form of crucibles, tubing, etc., by the laboratory.

Tables 4 and 5 contain the results on American and foreign spark plugs, respectively.

Table 6 gives the compositions and firing temperatures (in terms of Orton's pyrometric cones) of the various materials listed in Table 1. The various calcines mentioned in this table are described in Table 7.

The numerical values in the tables are in each case the average of the results of all the samples tested of the same material, but in many cases only one sample was tested. Unfortunately, the variation in T_e observed in different specimens of what was supposed to be the same material sometimes amounts to as much as 50° C, and this variation should be borne in mind in comparing the results on different materials.

It should also be noted that where both cup and plug samples of nominally the same material were tested the latter usually showed decidedly lower resistance. Three explanations for this may be suggested:

First. The material is made up by a somewhat different process, the cup specimens being molded under slight pressure while the plugs are extruded through a die.

Second. Surface leakage and conduction through the glaze may have been present in the plug specimens and not in the cups.

Third. The cup specimens being especially prepared for test, may have been made up with greater care than the plugs.

CONCLUSIONS.

The following conclusions seem evident from the data given in the tables.

Quartz is by far the best of the materials tested as far as resistance at high temperature is concerned, although several of the laboratory porcelain bodies, such as 77 and 78, approach this fairly closely. The mica plugs show fairly high resistivity, but it should be noted also that this material loses its water of crystallization at temperatures approaching 1,000° C. and becomes very soft and friable.

Several of the porcelains recently developed in this country for aviation work are very notably superior to the majority of the porcelains tested.

The steatite and Rajah porcelains from Germany are not notably high in resistivity, and therefore the very high reputation as spark plug insulators which these materials had before the war was apparently not due to their resistivity. The French porcelains are on the whole not as good as the more recent American bodies. This may account for the preference for mica plugs shown in the former country.

TABLE 1.—*Bureau of Standards cups.*

Cup No.—	b.	c.	Resistivity at 500° C. ρ_{500} megohms.	Effective temp. °C. T_e.
16	0.0135	13.58	6.8	560
17	.0089	9.50	.11	390
18	.0070	9.09	.39	440
22	.0089	9.33	.08	370
23	.0096	10.30	.32	450
24	.0085	9.27	.10	380
28	.0085	9.04	.062	358
32[1]	.0084	9.34	.14	400
35	.0108	11.02	.42	460
36	.0109	10.34	.078	400
39	.0125	10.84	.039	390
40	.0080	9.28	.19	410
47[1]	.0091	9.62	.12	400
48	.0105	10.26	.10	410
49	.0076	9.07	.19	400
50	.0113	10.43	.060	390
55	.0119	10.77	.066	400
63	.0090	10.85	2.2	540
70	.0097	10.46	.41	460
72[1]	.0098	10.89	.40	500
73	.0081	9.64	.39	450
74[1]	.0099	12.37	26	640
77	.0065	11.17	83	800
78	.0066	11.21	81	790
79	.0080	11.11	13	640
88	.0092	11.38	6	590
94[1]	.0119	13.32	23	620
95[2]	.0089	11.58	13	630
107	.0083	9.96	.65	480
109	.0069	10.18	5.4	610
116	.0071	11.18	43	730
119	.0075	11.51	58	730
152[3]	.0073	11.03	24	690
180	.0074	10.77	12	640

[1] Average two determinations. [2] Average five determinations. [3] Average three determinations.

TABLE 2.—*Cups from manufacturers.*

Maker.	No.	b.	c.	Resistivity at 500° C. ρ_{500} megohms.	Effective temp. °C. T_e.
Jeffery Dewitt	2	0.0071	9.82	1.9	540
Jeffery Dewitt	3	.0088	10.83	2.7	550
Jeffery Dewitt	5	.0091	11.98	27	660
Champion Ignition Co.	11	.0083	11.11	9.1	620
Champion Ignition Co.	17	.0075	10.57	6.6	610
Herold	451A	.0092	9.65	.11	400
Frenchtown	577	.0076	10.24	2.8	560
Frenchtown	315	.0114	10.12	.026	360
Frenchtown	280	.0107	9.74	.025	350
Frenchtown	775	.0080	11.10	12	640
Frenchtown	775X	.0080	11.14	14	640
Frenchtown	775BG	.0084	10.76	3.6	570
Frenchtown	28BG	.0087	10.10	.56	470
Frenchtown	783	.0090	10.20	.50	470
Frenchtown	741	.0077	10.70	7.1	610
Frenchtown	56	.0064	9.80	4.0	590
Brunt	150	.0069	9.78	2.1	550
Brunt	154	.0097	11.81	9.1	600

Jeffery Dewitt (supply Champion Toledo plugs). Frenchtown (supply Bethlehem and other plugs). Champion Ignition Co. (supply A. C. Titan plugs).

TABLE 3.—*Miscellaneous specimens.*

Material.	b.	c.	Resistivity at 500° C. ρ_{500} megohms.	Effective temp. °C. T_e.
Fire clay	0.0081	10.43	2.4	550
Pyrex crucible	.0094	9.56	.072	380
Pyrex glass tube	.0092	9.14	.035	340
Soda glass	.0214	13.5	.00063	350
Quartz	.0065	11.7	282.0	880
Large quartz tube	.0049	10.28	68	870
Small quartz tube	.0034	8.35	4.5	690

TABLE 4.—*American plugs.*

Plug.	No.	b	a	c	$\log_{10} K$.	Resistivity at 500° C. ρ_{500} megohms.	Resistance at 500° C. R 500 megohms.	Effective Temp. °C. T_e.
PORCELAIN.								
Bethlehem	611	0.0070	8.97	9.69	0.72	1.55	0.36	530
Bethlehem Aviation	1668	.0061	7.82	8.40	.58	.22	.059	390
Berkshire	128	.0095	9.05	9.47	.42	.052	.020	360
(3141) Champion [1]	231-041	.0078	9.32	9.77	.45	.74	.26	480
Champion (old)		.0082	9.63	10.00	.37	.79	.34	490
Champion (Toledo)	1812	.0088	10.74	10.99	.25	3.99	2.19	570
Champion, Toledo (3450)	1823	.0061	8.56	8.81	.25	.53	.32	460
B. S. Champion, Toledo	3496	.0053	8.77	8.92	.15	1.9	1.32	550
Do	3518	.0032	7.16	7.31	.15	.51	.36	410
Harding's insul		.0042	7.56	7.92	.36	.66	.29	460
Do	Red.	.0124	11.54	12.05	.51	.71	.22	490
Do	Gray.	.0102	10.47	11.25	.78	1.4	.23	510
Do	Hercules.	.0077	10.15	10.81	.66	9.1	1.99	620
Coors, Herold		.0065	8.10	8.37	.27	.13	.07	360
Do	C-4	.0086	9.29	9.56	.27	.18	.098	410
Do.[2]	C-5	.0070	8.87	9.14	.27	.44	.23	450
Duffy [2]		.0069	9.18	9.62	.44	1.5	.54	520
Frenchtown	Beth. Avia.	.0093	10.67	10.74	.064	1.23	1.05	510
Do	56	.0088	11.23	11.48	.25	12.0	6.8	620
Do	884	.0066	8.50	9.07	.57	.59	.16	470
Hercules	1818	.0057	8.69	9.35	.66	3.36	.69	590
Mosler [2]	793-022	.0084	9.51	10.16	.66	.91	.20	500
Mohawk		.0087	9.52	10.01	.49	.46	.15	460
Randall	45	.0075	9.22	9.79	.57	1.0	.29	500
Rajah (German) [2]		.0078	8.61	8.68	.07	.060	.05	340
Rajah (Empire) [2]	45	.0071	8.30	8.47	.171	.093	.056	350
Rajah (Coors)		.0080	8.86	8.93	.07	.085	.072	370
Red Head	.056	.0076	7.08	7.74	.66	.008	.0019	230
Titan A. C [2]	15.458	.0079	8.57	9.21	.63	.18	.01	410
Cico A. C		.0052	7.01	7.63	.61	.117	.026	310
Valve plug	.028	.0056	8.50	8.61	.11	.65	.50	470
Walden-Worcester	X 7	.0069	8.30	8.75	.45	.20	.07	400
MICA.								
Splitdorf	873	.0078	9.08	10.28	1.20	2.4	.15	550
Splitdorf, G. J	1819	.0078	9.59	10.79	1.20	7.8	.15	614
Bethlehem	397	.0143	13.73	15.00	1.25	71.0	3.80	630
Berkshire	110	.0053	9.25	9.93	.68	19.0	3.98	700
GLASS.								
Anderson	294	.0100	8.88	9.35	.47	.022	.008	335
Do.[4]	653	.0158	10.87	12.18	1.31	.02	.001	390
Do	655	.0128	9.70	11.01	1.31	.04	.002	390
LAVA.								
Duffy		.0064	8.51	9.20	.69	1.00	.20	500
G. E	X 16	.0058	9.25	10.17	.92	18.0	.210	720
STEATITE.								
Herz Bougie	332	.0098	9.63	10.16	.53	.18	.054	420
Do	1827	.0098	11.83	12.37	.54	29.0	8.5	655

[1] Average of eight determinations.
[2] Average of two determinations.
[3] Average of four determinations.
[4] Pyrex and glass.

TABLE 5.—*Foreign plugs.*

Plug.	B. S. No.	Material.	b	a	c	$\log_{10} K$.	Resistivity at 500° ρ_{500} megohms.	Resistance at 500° C. R. 500 megohms.	Effective temp. °C. T_e.
Re 'V	456	Porcelain	0.0096	9.51	10.53	1.02	0.54	0.031	470
Oleo	439	do	.0086	9.10	10.07	.97	.61	.063	470
Joly [1]	421	do	.0085	9.39	10.26	.86	1.0	.14	500
Pognon		Composition	.0066	8.46	9.19	.76	.78	.14	480
Fert		Porcelain	.0078	8.57	9.15	.58	.18	.047	400

[1] Average three determinations.

TABLE 6.—*Spark plug compositions.*

B. S. body No.	Georgia kaolin.	Florida kaolin.	North Carolina kaolin.	Delaware kaolin.	Maine feldspar.	Flint.	Whiting.	Tennessee ball clay No. 5.	Kentucky ball clay No. 4.	Calcined Florida kaolin.	Calcine-kaoline, equal parts of four.	Calcine No. 3.	Calcine No. 19.	Calcine No. 20.	Calcine No. 13.	Calcine No. 14.	Z_2O_3.	Maturing temperature in standard cones.
	P. ct.	*P. ct.*	*P. ct.*	*P. ct.*	*P. ct.*	*P. ct.*	*P. ct.*	*P. ct.*	*P. ct.*	*P. ct.*	*P. ct.*	*P. ct.*	*P. ct.*	*P. ct.*	*P. ct.*	*P. ct.*	*P. ct.*	
16	11.25	11.25	11 25	11.25	16.00	39.00	.....	.....	.....	.....	.....	.....	.....	.....	.....	.....	.....	16 down.
17	11.25	11.25	11.25	11.25	18.00	37 00	.....	.....	.....	.....	.....	.....	.....	.....	.....	.....	.....	15 down.
18	11 25	11.25	11.25	11.25	20.00	35 00	.....	.....	.....	.....	.....	.....	.....	.....	.....	.....	.....	14 down.
22	11.25	11 25	11.25	11.25	28.00	27.00	.....	.....	.....	.....	.....	.....	.....	.....	.....	.....	.....	14 half over.
23	11.25	11.25	11.25	11.25	30.00	25.00	.....	.....	.....	.....	.....	.....	.....	.....	.....	.....	.....	13 half over.
24	12.50	12.50	12.50	12.50	16.00	34.00	.....	.....	.....	.....	.....	.....	.....	.....	.....	.....	.....	15 down.
28	12.50	12.50	12.50	12.50	24.00	26.00	.....	.....	.....	.....	.....	.....	.....	.....	.....	.....	.....	14 half over.
32	13.75	13.75	13.75	13.75	14.50	29.00	1.50	.....	.....	.....	.....	.....	.....	.....	.....	.....	.....	Do.
35	13.75	13.75	13.75	13.75	20.50	23.00	1.50	.....	.....	.....	.....	.....	.....	.....	.....	.....	.....	12 down.
36	13.75	13.75	13.75	13.75	22.50	21.00	1.50	.....	.....	.....	.....	.....	.....	.....	.....	.....	.....	Do.
39	13.75	13.75	13.75	13.75	28.50	15.00	1.50	.....	.....	.....	.....	.....	.....	.....	.....	.....	.....	Do.
40	15.00	15.00	15.00	15.00	16.00	24.00	.....	.....	.....	.....	.....	.....	.....	.....	.....	.....	.....	13 down.
47	15.00	15.00	15.00	15.00	30.00	10.00	.....	.....	.....	.....	.....	.....	.....	.....	.....	.....	.....	10 down.
48	12.50	12.50	12.50	12.50	24.00	5.00	1.00	.....	.....	20.00	.....	.....	.....	.....	.....	.....	.....	14 down.
49	12.50	12.50	12.50	12.50	22.00	12.00	1.00	.....	.....	.....	.....	.....	.....	.....	.....	.....	.....	Do.
50	12.75	12.75	12.75	12.75	25.00	.....	1.50	.....	.....	.....	.....	.....	22.50	.....	.....	.....	.....	Do.
55	12.50	12.50	12.50	12.50	28.50	.....	1.50	.....	.....	.....	20.00	.....	.....	.....	.....	.....	.....	14 half over.
63	12.50	12.50	12.50	12.50	13.50	.....	1.50	.....	.....	.....	35.00	.....	.....	.....	.....	.....	.....	16 down.
70	12.50	12.50	12.50	12.50	16.40	.....	1.00	.....	.....	.....	.....	4.10	28.50	.....	.....	.....	.....	14 down.
72	10.00	9.00	9.00	9.00	22.00	.....	.....	5.00	.....	.....	.....	.....	.....	.....	.....	.....	36.00	13 down.
73	10.00	9.00	9.00	9.00	17.60	.....	.....	5.00	.....	.....	.....	4.40	.....	.....	.....	.....	36.00	Do.
74	.....	.....	.....	.....	.....	.....	.....	7.50	7.50	.....	.....	.....	.....	85.00	.....	.....	.....	Do.
77	1.25	1.25	1.25	1.25	.....	.....	.....	5.00	5.00	.....	.....	.....	.....	85.00	.....	.....	.....	Do.
78	2.50	2.50	2.50	2.50	.....	.....	.....	5.00	5.00	.....	.....	.....	.....	80.00	.....	.....	.....	Do.
79	2.50	2.50	2.50	2.50	.....	.....	.....	7.50	7.50	.....	.....	.....	.....	75.00	.....	.....	.....	Do.
88	12.50	12.50	12.50	12.50	8.00	30.00	.....	.....	.....	.....	.....	.....	.....	.....	12.00	.....	Al_2O_3	15 half over
94	11.25	11.25	11.25	11.25	17.60	.....	.....	.....	.....	.....	.....	.....	.....	.....	4.40	.....	33.00	16 down.
95	10.00	10.00	10.00	10.00	.....	42.00	$MgCO_3$	.....	.....	.....	.....	.....	.....	.....	.....	18.00	.....	20 down.
107	10.00	10.00	13.50	13.50	14.00	21.00	10.00	4.00	4.00	Calc. 8A	.....	.....	.....	.....	.....	.....	.....	12 down.
109	8.00	8.00	.....	9.00	.....	.....	.....	10.00	10.00	20.00	35.00	.....	.....	.....	.....	.....	.....	16 down.
116	12.50	12.50	12.50	12.50	.....	30.00	.....	.....	.....	.....	.....	.....	.....	.....	20.00	.....	.....	18 down.
119	12.50	12.50	12.50	12.50	.....	30.00	.....	.....	.....	.....	.....	.....	.....	.....	.....	20.00	.....	Do.
152	7.50	7.50	7.50	7.50	.....	.....	$MgCO_3$	5.00	5.00	.....	.....	.....	40.00	.....	.....	20.00	Al_2O_3	16 down.
180	6.87	6.87	27.75	27.50	.....	5.75	4.58	4.58	4.58	.....	.....	.....	.....	.....	.....	.....	11.52	20 down.

TABLE 7.—*Spark plug calcines.*

B. of S. calcine, No.	$MgCO_3$.	Kaolin.	Flint.	Calcines, Al_2O_3.	Boric acid.	Calcining temperature.
	Per cent.	*Per cent.*	*Per cent.*	*Per cent.*	*Per cent.*	*Cone.*
3	39.50	60.50	.....	.....	.....	10
8 A	14.40	44.30	41.30	.....	.....	12
13	23.85	76.15	.....	.....	.....	12
14	18.20	56.00	25.80	.....	.....	13
19	.....	70.20	.....	27.80	2.00	20
20	34.30	.....	65.70	.....	.....	16

REPORT No. 53.

PART III.

PREPARATION AND COMPOSITION OF CERAMIC BODIES FOR SPARK PLUG INSULATORS.[1]

By A. V. Bleininger.

RÉSUMÉ.

In airplane engines the porcelain of the spark plugs is subjected to severe conditions, involving high temperatures, sudden heating and cooling effects, and mechanical stresses. To be perfectly suited for the purpose, the material must remain a good electrical insulator at the maximum temperature reached, should not be subject to permanent volume changes, should possess constant thermal expansion, and must be strong and tough.

Porcelains possessing such qualities have been developed in the Pittsburgh laboratory of the Bureau of Standards. The compositions of the best types are as follows:

Porcelain No. 152.

	Per cent.
Georgia kaolin	10
Florida kaolin	10
North Carolina kaolin	10
Delaware kaolin	10
Calcine No. 19	40
Calcine No. 14	20

The compositions of the calcines are:

	Calcine No. 19.	Calcine No. 14.
Kaolin	70.20	56.00
Alumina	27.80	.....
Magnesium carbonate (precipitated)	.....	18.20
Potters flint	.....	25.80
Boric acid	2.00	.....

Porcelain No. 194.

	Per cent.
Beryl	35.0
Georgia kaolin	12.5
Florida kaolin	12.5
North Carolina kaolin	12.5
Delaware kaolin	12.5
Potters flint	15.0

PORCELAINS FOR SPARK PLUGS.

The average commercial porcelain does not fulfill the conditions required for spark-plug service, nor for any other conditions where high-tension currents are employed, and the temperature is considerably above atmospheric conditions. From the standpoint of the electrical resistance at the temperatures reached in airplane engines, the feldspathic porcelains begin to break down at a rate rapidly increasing with temperature, due to electrolytic effects. This is indicated also by the polarization which is observed in using direct current. The leakage thus taking place may become a serious factor.

[1] This Report was confidentially circulated during the war as Bureau of Standards Aeronautic Power Plants Report No. 23.

This average porcelain is likewise not constant in volume; and these volumetric changes are greater than can be explained solely by thermal expansion. Aside from the thermal expansion, the quartz content of porcelain, when heated or cooled, is subject to certain modifications in crystalline structure, accompanied by definite volume changes. Thus, the form of quartz permanent at atmospheric temperature is alpha quartz, which inverts to beta quartz at 570° C, a transformation which is reversed by cooling. On the other hand if, in the firing of porcelain, the quartz is inverted to its high temperature form, cristobalite, there is again the transformation of the alpha to the beta modification to be considered, which takes place at 230° C. In either case, volume changes are unavoidable in all porcelains containing free quartz in large amounts, due to the inversion noted. In a good spark-plug porcelain, the quartz should be eliminated from the compound and replaced by a substance not subject to these inversions.

Another defect of the ordinary porcelain is that the coefficient of thermal expansion is by no means constant at different temperatures. It may be 19×10^{-6} between 30—200° C and 5×10^{-6} between 400—500° C.

With respect to mechanical strength, also, great variations are possible. A series of tests of commercial electrical porcelains, conducted at the Pittsburgh laboratory of the Bureau of Standards, showed differences in the modulus of elasticity varying from 1,600,000 to 6,000,000.

For the purpose of studying porcelains from the standpoint of their electrical conductivity at the high temperatures obtaining in airplane ignition systems, a large number of typical compositions were made up in the form of the test cups illustrated in figure 2 of Part II of this report. These mixtures were usually prepared in 10-kilogram batches, carefully weighed out and ground wet, in porcelain-lined ball mills for three hours. The suspension of clay was pumped into a filter press to remove the water, and then kneaded in a mixing machine to the consistency required for shaping the mass on the potters wheel. This was done by the use of plaster molds in which the cups were "jiggered" in the usual manner in which pottery is made. The specimens were then dried, placed in fire-clay containers (saggers) and burned in a down-draft kiln fired with natural gas to the finishing temperature. The latter was controlled both by means of thermocouples with the necessary galvanometers, and pyrometric cones, made by Edward Orton, Columbus, Ohio. Each cup was examined for nonabsorption by the application of ink. The testing of the specimens was done at the Washington laboratory as described in Part II of this report. The characteristic expression for the resistivity of the porcelains is the T_e value which represents the temperature in °C. at which a cubic centimeter of the material still shows a resistance of one megohm.

REPLACEMENT OF FELDSPAR.

Upon comparing the T_e values of the different porcelains it was noted that there exists no definite relation between the composition and the electrical conductivity. On the other hand, the higher the maturing temperatures of the porcelains, the higher was the T_e value. This is practically equivalent to saying that, roughly speaking, the electrical resistance at higher temperatures is the greater the lower the feldspar content, since small amounts of this flux make it necessary to carry the porcelain to a higher burning temperature. The relation, however, is not well defined, as may be observed from the results compiled in the following table:

TABLE I.

No. of body.	Feldspar.	Maturing temperature in cones.	T_e value.
	Per cent.		
16	16	16	560
17	18	15	390
18	20	14	440
22	28	[1] 14	370
23	30	13	450

[1] Half over.

It is quite evident that the micro-structure of the porcelains is an important factor in this connection, since it can not be immaterial how much kaolin or quartz has been dissolved by the fused feldspar and how much sillimanite has been formed. The evidence, however, was considered sufficient to warrant the replacement of the feldspars by other fluxes, the oxides of magnesium and beryllium being used for this purpose.

Owing to the evolution of carbon dioxide during the firing process from magnesite, and the artificially prepared basic magnesium carbonate, and the very large shrinkage accompanying their use as a flux, it was decided to introduce the magnesia in the form of a calcine; that is, a silicate mixture previously fired to a point close to vitrification. The mixtures employed for this purpose correspond to the formula: $MgO\ Al_2O_3\ 2SiO_2$; $MgO\ Al_2O_3\ 4SiO_2$, and $MgO\ Al_2O_3\ 6SiO_2$. Of these, the first and the second were most used in this work. The preparation of the calcines consisted in dry ball mill grinding and firing the mixture made up into balls with just sufficient water. After calcination, the material was crushed and ground and introduced into the bodies in this form. The beryllium oxide was brought in through the use of the mineral beryl (which has the general composition $3BeO\ Al_2O_3\ 6SiO_2$) without any previous treatment.

With the use of magnesia as the principal flux, the electrical resistance and hence the value T_e, was found to increase quite decidedly, though with no well-defined regularity as referred to percentage content of magnesia. It was seen again in this connection, that the structure of the porcelain plays an important part especially as it is known that MgO accelerates the crystallization of sillimanite most vigorously. Not only the number but also the size of the sillimanite crystals is of significance in determining the texture of the body, whether it is to be fine grained, glassy, or coarsely crystalline. The rate of cooling the porcelain is likewise of importance, since a rapid drop in temperature invariably causes the structure to be closer and of more vitreous character than when a longer time is taken in cooling down the kiln. For this reason smaller kilns are to be preferred to larger ones, since they require less time in cooling at a given rate. The effect of magnesia added in the form of synthetic silicate, is strikingly shown by the high T_e values of bodies Nos. 77 and 78. See Table IV.

It is a fact that the magnesium silicates show electrolytic effects which are much less prominent than when feldspar, an alkali-aluminum silicate ($K_2O\ Al_2O_3\ 6SiO_2$) is used as a flux. It likewise appears that the higher the firing temperature of the porcelain the greater its electrical resistance, at temperatures up to 700° C., or somewhat above this point.

With reference to the use of beryllium oxide it was found that this flux behaves similarly to the magnesia in showing high electrical resistance and T_e values. This is indicated by the following table:

TABLE II.

No.	Beryl.	Kaolin.	Flint	Maturing temperature of porcelain in cones.	T_e
	Per cent.	*Per cent.*	*Per cent.*		
193	25	50	25	12	624
194	35	50	15	11	784
195	45	50	5	11	798

It is evident from these results that beryllium oxide, used in the form of the mineral beryl, is a valuable flux from the standpoint here under consideration. It requires, however, careful temperature control in firing, since the beryllium porcelain is subject to sudden deformation as the vitrification temperature is exceeded. The experiments have proven that beryllium oxide is worthy of consideration for the production of such porcelain, and the high T_e value obtained, 798, is exceedingly promising. The firing temperature of these bodies is quite low, from cones 11–12.

Another interesting fact developed with reference to the thermal expansion of the beryllium porcelain, which was found to be lower than that of the feldspathic bodies commonly employed. The average coefficient was found to be 1.63×10^{-6} for the temperature interval 26—200° C.; 2.95×10^{-6} for 200—400°; 3.60×10^{-6} for 400—570°; and 2.33×10^{-6} for 26—400°.

REPLACEMENT OF QUARTZ.

From a general study of porcelains, it appears desirable to eliminate the quartz, as has been pointed out in a previous paragraph. Some of the materials available for this purpose are calcined kaolin, synthetically prepared sillimanite (Al_2O_3 SiO_2), and sintered or fused alumina and zirconium oxide. These substances have been introduced in a number of compositions. The effect of adding calcined kaolin in general was beneficial; and even with a feldspar content of 13.5 per cent (body No. 63), a fair T_e value, 540, was obtained. This particular composition contained 50 per cent raw kaolin, 13.5 per cent feldspar, 1.5 per cent calcium carbonate, and 35 per cent calcined kaolin. The maturing temperature of this porcelain was that corresponding to cone No. 16. It is evident that by raising the content of calcined kaolin still more at the expense of the feldspar a higher T_e value would be obtained. The introduction of plastic ball clay to replace kaolin, invariably and in all types of bodies, reduces the electrical resistance within the temperature range here under consideration.

The use of fused alumina in any extensive work was prohibited by the lack of material low in iron content. The commercial substance (alundum) is unsuited for this purpose. The total amount of white fused alumina available was not more than 2 pounds. To bring about the necessary impervious and dense structure the use of 17.6 per cent of feldspar was required. A mixture consisting of 45 per cent kaolin, 17.6 per cent feldspar, 4.4 per cent calcine No. 13, and 33 per cent of alundum, resulted in a very tough porcelain which showed a T_e value of 620. Calcine No. 13 was compounded according to the formula MgO Al_2O_3 $2SiO_2$ from 84 parts, by weight, of magnesium carbonate and 258 of plastic kaolin from Florida and Georgia. Here again the reduction of the feldspar content and its replacement by calcine No. 13, or beryl, or a combination of these two would be certain to raise the T_e value considerably and at the same time would result in a porcelain of excellent mechanical properties. The cost of the fused white alumina would be quite high, but would be justified under the circumstances. Furthermore, a single calcine could be readily produced by combining the raw materials of calcine No. 13, the kaolin and magnesite, with uncalcined alumina from any convenient source, and firing the mixture to a point of constant volume, which could be accomplished at temperatures not exceeding cone No. 18. At the same time this procedure would simplify the process of preparation very considerably.

Sillimanite ($Al_2O_3SiO_2$) is a normal component of all hard fired porcelain; and this constituent, if not present in the form of large crystals, imparts to the material constancy in volume upon heating, lowers the thermal expansion, increases the refractoriness, and the resistance to sudden heating and cooling. For this reason it was thought desirable to produce the mineral synthetically and to introduce it in the porcelain composition in place of the quartz. This was done by combining 70.20 per cent of plastic kaolin, 27.80 of anhydrous alumina, and 2 per cent of boric acid. After grinding this mixture in the dry state in a ball mill, it was made up with water to form a plastic mass which was molded into balls calcined to a temperature corresponding to that of cone No. 20, or approximately 1,530° C. At this temperature the mass sintered to a dense structure, subject to but little additional shrinkage and containing only a small amount of uncombined alumina. The boric acid was added to assist in bringing about the necessary shrinkage and closing up of the pores, and it is quite probable that most of this constituent is volatilized at the final temperature of the calcination. This calcine (No. 19) was then crushed separately, passed over a magnetic separator, and then ground, together with the other materials of the body with the addition of water, in the ball mill. In preparing this type of body the feldspar was eliminated on the basis of the results discussed above, and replaced by a calcine corresponding to the formula MgO Al_2O_3 $4SiO_2$ (No. 14). This porcelain (No. 152) was composed of 30 per cent of kaolin, 10 per cent of ball clay, 40 per cent of sillimanite calcine, and 20 per cent of fluxing calcine No. 14, and fired to a temperature of cone No. 16 or higher. The resultant material had excellent mechanical qualities and an average T_e value of 690. The structure of this body should be fine and dense, a condition which requires quite rapid cooling of the kiln. Slower cooling results in the formation of coarser sillimanite crystals which cause a structure much less resistant to sudden heating and cooling.

The preparation of this body may be simplified by the combination of the two calcines into one, thus, by employing the composition of the flux No. 13 ($MgO\ Al_2O_3\ 2SiO_2$) the combined calcine would be composed of 75.10 per cent plastic kaolin, 8.77 per cent magnesite, and 16.13 per cent anhydrous alumina. The boric acid content has been eliminated. Body No. 152 would then consist of 30 per cent of kaolin, 10 per cent of ball clay, and 60 per cent of the combined calcine. Wherever the working conditions permit the ball clay should be eliminated, and an effort made to employ the body containing 40 per cent of plastic kaolin, which can usually be done by allowing the mixture to age before molding it.

The tendency of the body to crystallize may be diminished also by replacing the fluxing calcine in part by beryl, so that these two components are present in the ratio of 1:1. If, then, the combined fluxing and sillimanite calcine is employed, the resultant composition would be kaolin, 60.94 per cent; anhydrous alumina, 18.39 per cent; boric acid, 1.32 per cent; magnesite, 4.58 per cent; beryl, 14.78 per cent. The body, as before, would consist of 60 per cent of this calcine and 40 per cent of kaolin. The fusion point of this mixture is so low that it would be quite possible to eliminate the boric acid entirely. At the same time the vitrification point of the body is lower and closer to the normal kiln temperatures.

Attention might be called to the fact that the use of a siliceous porcelain is not objectionable from the electrical standpoint but only from consideration of the mechanical strength, resistance to sudden temperature changes, etc. This is shown by the results upon high silica porcelains, bodies Nos. 116 and 119, which show a very high T_e value, namely 730. This type of porcelain contains 50 per cent of clay, 30 per cent of free quartz (flint), and 20 per cent of magnesia calcine. In No. 116, the calcine corresponds to the formula $MgO\ Al_2O_3\ 2SiO_2$, and in No. 119 to $MgO\ Al_2O_3\ 4SiO_2$. It is fair to state those porcelains would give excellent results, considered from the dielectric standpoint, when used under conditions not so extreme with reference to temperature and shock as is the case with spark plugs used in airplane engines.

Zirconium oxide was used only in two porcelains, due to the comparatively limited supply available. The material at hand was zircon which contained 52.74 per cent of ZrO_2 and 43.46 per cent of silica. As received, the mineral was high in iron, which, however, was eliminated by treatment with chlorine at a temperature of 800° C. In this manner all but a trace of the iron was removed. Owing to the fact that these zircon porcelains were produced comparatively early in the work, feldspar was employed as the flux. The result was that the electrical resistance, and hence the T_e value, was low, being 500 and 450, respectively. With the use of the magnesia or beryllium fluxes much better products could undoubtedly be produced. The mechanical strength of these porcelains was excellent in every respect. The composition of these bodies, Nos. 72 and 73, is given in Table IV.

The effect of the quartz in porcelain upon the thermal expansion of the body is shown by the results compiled in Table III.

TABLE III.

No.	Clay.	Quartz (flint).	MgO calcine.	Formula of MgO calcine.	Sillimanite calcine.	Coefficient of thermal expansion $\times 10^6$.			
						30–200 °C.	200–400 °C.	400–550 °C.	30–400 °C.
	Per cent.	*Per cent.*	*Per cent.*	*Per cent.*	*Per cent.*				
114	50	20	30	$MgO\ Al_2O_3\ 6SiO_2$	.....	19.45	9.35	5.52	13.99
116	50	30	20	$MgO\ Al_2O_3\ 2SiO_2$	.....	7.34	6.11	4.68	6.68
117	50	20	30	$MgO\ Al_2O_3\ 2SiO_2$	.....	8.93	4.43	4.05	6.51
119	50	30	20	$MgO\ Al_2O_3\ 4SiO_2$	.....	19.61	11.13	8.08	15.03
120	50	20	30	$MgO\ Al_2O_3\ 4SiO_2$	.....	10.45	5.43	4.45	7.74
152	40	.....	20	$MgO\ Al_2O_3\ 4SiO_2$	40	3.36	4.19	4.78	3.81

It is at once evident from a comparison of these figures that the thermal expansion of these magnesia porcelains increases with the silica content of the body, and, at the same time, is subject to decided variation within the temperature limits of 30°–550° C. On the other hand the porcelain in which the clay content is lower, and all the quartz has been replaced by sillimanite, shows both the lowest thermal expansion and the least variation in the value of the coefficient. However, the composition is not the only determining factor, and the importance of the microstructure must be realized.

CONCLUSIONS.

The work, the results of which have been given, has been successful in showing: First, the injurious qualities imparted to electrical porcelains by the use of feldspar as a flux; and second, in bringing out the desirability of replacing the quartz by minerals or synthetically prepared materials which are more constant in volume when heated. The remedial procedures advocated are, hence: (1) The replacement of feldspar by other fluxes, such as silicates of the type $MgO\ Al_2O_3\ 2SiO_2$, or $MgO\ Al_2O_3\ 4SiO_2$, or other silicates of beryllium and the alkaline earths, either natural or prepared artificially. (2) The elimination of quartz and the substitution of substances not subject to inversions or other volume changes. These may be highly calcined kaolin, alumina, zircon, or sillimanite, either natural or produced synthetically.

The compositions of the most typical porcelains produced in this work are compiled in Tables IV, V, and VI, and the T_e value is given for each body, so that these tabulations may be consulted for detailed information.

All of the electrical measurements, as well as the determinations of the thermal expansion of the porcelains, have been made in the Washington laboratories of the Bureau of Standards.

TABLE IV.

Number of body.	16	17	18	22	23	24	28	32	35	36	39	40
	Per ct.	*Per ct.*	*Per ct.*	*Per ct.*	*Per ct.*	*Per ct.*	*Per ct.*	*Per ct.*	*Per ct.*	*Per ct.*	*Per ct.*	*Per ct.*
Kaolin	45.00	45.00	45.00	45.00	45.00	50.00	50.00	55.00	55.00	55.00	55.00	60.00
Feldspar	16.00	18.00	20.00	28.00	30.00	16.00	24.00	14.50	20.50	22.50	28.50	16.00
Potters flint	39.00	37.00	35.00	27.00	25.00	34.00	26.00	29.00	23.00	21.00	15.00	24.00
Whiting ($CaCO_3$)								1.50	1.50	1.50	1.50	
Ball clay												
Calcined kaolin												
Calcine No. 3												
Calcine No. 19												
Calcine No. 20												
Zircon												
Maturing temperature in cones	16	15	14	14	13	15	14	14	12	12	12	13
T_e value	560	390	440	370	450	380	358	400	460	400	390	410

Number of body.	47	48	49	50	55	63	70	72	73	74	77	78	79
	Per ct.	*Per ct.*	*Per ct.*	*Per ct.*	*Per ct.*	*Per ct.*	*Per ct.*	*Per ct.*	*Per ct.*	*Per ct.*	*Per ct.*	*Per ct.*	*Per ct.*
Kaolin	60.00	50.00	50.00	51.00	50.00	50.00	50.00	37.00	37.00		5.00	10.00	10.00
Feldspar	30.00	24.00	22.00	25.00	28.50	13.50	16.40	22.00	17.60				
Potters flint	10.00	5.00	12.00										
Whiting ($CaCO_3$)		1.00	1.00	1.50	1.50	1.50	1.00						
Ball clay								5.00	5.00	15.00	10.00	10.00	15.00
Calcined kaolin		20.00	15.00		20.00	35.00							
Calcine No. 3							4.10		4.40				
Calcine No. 19				22.50			28.50						
Calcine No. 20										85.00	85.00	80.00	75.00
Zircon								36.00	36.00				
Maturing temperature in cones	10	14	14	14	14	16	14	13	13	13	13	13	13
T_e value	400	410	400	390	400	540	460	500	450	640	800	790	640

Number of body.	88	94	95	107	109	116	152	180	193	194	195
	Per ct.	*Per ct.*	*Per ct.*	*Per ct.*	*Per ct.*	*Per ct.*	*Per ct.*	*Per ct.*	*Per ct.*	*Per ct.*	*Per ct.*
Kaolin	50.00	45.00	40.00	47.00	25.00	50.00	30.00	69.00	40.00	40.00	40.00
Feldspar	8.00	17.60		14.00							
Potter's Flint	30.00		42.00	21.00		30.00		5.75	25.00	15.00	5.00
Magnesium carbonate				10.00				4.58			
Ball clay				8.00	20.00		10.00	9.15	10.00	10.00	10.00
Calcine kaolin					35.00						
Calcine No. 8A					20.00						
Calcine No. 13	12.00	4.40				20.00					
Calcine No. 14			18.00				20.00				
Calcine No. 19							40.00				
Calcine No. 20											
Calcine Al_2O_3		33.00						11.52			
Beryl									25.00	35.00	45.00
Maturing temperature in cones	15	16	20	12	16	18	16	20	12	11	11
T_e value	590	620	630	480	610	730	690	640			

TABLE VI.—*Compositions of calcines.*

Calcine No.	$MgCo_3$.	Kaolins.	Flint.	Calcined Al_2O_3.	Boric acid.	Calcination temperature cone.
	Per cent.	*Per cent.*	*Per cent.*	*Per cent.*	*Per cent.*	
3	39.50	60.50	.....	.....	.....	10
8-A	14.40	44.30	41.30	.....	.....	12
13	23.85	76.15	.....	.....	.....	12
14	18.20	56.00	25.80	.....	.....	13
19	.....	70.20	.....	27.80	2.00	20
20	34.30	.....	65.70	.....	.....	16

REPORT No. 53.

PART IV.

CEMENTS FOR SPARK-PLUG ELECTRODES.[1]

By H. F. Staley.

RÉSUMÉ.

Considerable trouble has been caused in airplane engine work through the breaking of the central electrode of spark plugs.

An investigation of this problem by the Bureau of Standards shows that in many cases the cement used to hold the nickel electrode wire in the porcelain is of such a nature that it rapidly eats away the wire through oxidization, when exposed to the high temperature of the engine cylinder. A cement composed of silicate of soda and raw kaolin has been found to give the least trouble in this respect.

In cases where the cement holds the wire firmly in the porcelain the latter often cracks when subjected to heat due to the difference in the coefficients of thermal expansion of the wire and the porcelain. The breaking of the porcelain does not seem to be due to leaky spark plugs as has often been supposed to be the case.

On account of the difficulties attending the use of any form of cement between the porcelain and central electrode, the elimination of the cement and the use of a mechanical seal at the top of the porcelain is greatly to be desired. In such a plug only a porcelain strong enough to safely withstand the resulting stresses should be used. The porcelain recently developed by the Bureau of Standards is believed to meet these requirements.

CEMENTS FOR SPARK-PLUG ELECTRODES.

Considerable trouble has been experienced in the operation of airplane engines due to breaking of the central electrode wires in spark plugs at the point where they enter the porcelain.

Examination of numerous broken spark plugs showed that at the point of failure the central electrode wire was oxidized practically through its cross section, this oxidization extending up into the spark plug a variable distance, depending upon the permeability of the cement with which the wire was surrounded. In some cases the cement had melted and run down along the wire. It was apparent from the nature of the failures that in order to thoroughly study the problem, the composition of the electrode wire, porcelain insulator and the cement used to secure the wire to the insulator, must be investigated.

The material in common use for central electrodes in the spark plugs bought by the Government for airplane service is known as "97 per cent spark point nickel wire." The following are typical analyses:

Analyses of wire.

Laboratory No.	47134	47135
Nickel	97.0%	96.9%
Manganese	1.5	1.6
Iron	0.8	0.9
Copper	0.4	0.2

[1] This Report was confidentially circulated during the war as Bureau of Standards Aeronautic Power Plants Report No. 35.

Thermal expansion of wire.

Interval:	Average coefficient.
25 to 200° C	14×10^{-6}
200 to 400° C	16
400 to 600° C	16
600 to 840° C	20
25 to 840° C	17

In the composition of porcelain insulators several spark-plug manufacturers use modifications of Bureau of Standards body No. 152, the thermal expansion of which is as follows:

Thermal expansion of porcelain.

Interval:	Average coefficient.
30 to 200° C	3.36×10^{-6}
200 to 400° C	4.19
400 to 520° C	4.78
30 to 400° C	3.81
30 to 510° C	4.06

In the case of the cements used between the wire and porcelain, it developed that most of these consisted of a mixture of silicate of soda with finely powdered solids, which were supposed to be chemically inert. Barium sulphate was the solid used by the manufacturer whose plugs gave the most trouble, while another maker, whose plugs are used in large quantities for airplane work, employed finely ground silica. Silicate of soda cements are advantageous for this work because they are cheap, can be worked cold, and are gas tight at low temperatures.

To determine the effect of various cements on electrode wires, mixtures were made of silicate of soda and typical powdered materials. Small pellets of these mixtures were worked around commercial nickel electrode wires and after drying at 120° C., the wires and adhering pellets were heated in an oxidizing atmosphere to 1,000° C., which approximates the temperature at the tip of the porcelain in an airplane engine in operation. After cooling, the pellets were broken off and the wire beneath them examined. The results are given in Table I.

From Table I, it appears that the solids used do not act simply as inert material. In the second case in this table, for instance, the reaction probably is as follows:

$$Na_2O\cdot SiO_2+BaSO_4=Na_2SO_4+BaO\cdot SiO_2.$$

The reactions in the other cases are too problematical to be worth discussion here. It is sufficient to say that raw kaolin was found to be the best solid for use in spark plug cements since it absorbed the sodium silicate as fast as it melted and produced an impervious mass. The oxidation is greatly accelerated by contact with fused alkaline substances.

Attempts were made to seal the wires into the porcelain after heating by means of glasses ranging in coefficient of thermal expansion from that of the porcelain to that of the wire. None of these attempts have so far been successful, for in cooling, the glass pulled away either from the porcelain or from the wire. Special wire, with a coefficient of thermal expansion about equal to that of porcelain, has been ordered. These experiments will then be repeated.

As a part of this investigation, a visit was made by a representative of the bureau to a spark plug factory where all porcelains were subjected to a sudden heating test, in which the tip of the porcelain was placed in the flame of a Meker burner. The porcelains were uniformly passing this test. When it was suggested that porcelains containing electrodes be tested in the same manner, it was found that 45 per cent of the porcelains cracked. As the result of actual engine tests of complete plugs at the bureau, it has been found in general that in the cracked plugs the cement is holding well, the failure being due to the difference in coefficient of thermal expansion between the porcelain and nickel wire, which sets up so high a stress between the two parts of the plug that one or the other has to give way. This conclusion is confirmed by the fact that in the above factory tests, on the 55 per cent of plugs that did not fail, either cement was absent from around the wire near the tip of the porcelain or else it softened and gushed out of the hole.

The subject of gas leakage of spark plugs in relation to failure of the central electrode has also been studied. While considerable work has been done in determining the gas leakage of new plugs in view of the above results, it appeared advisable to determine leakage on plugs that had been used in an airplane engine. In Table 2 are given the results of examination of a typical lot of 40 plugs. The following information will be of assistance in reading this table. Of the 12 broken plugs, 6 leaked badly and 6 did not leak at all. Of those that leaked badly, 4 contained loose wires and, in the case of one of these, the wire could be pulled out easily. It is evident that tests for gas leakage on new plugs give no indication of their gas leakage in use and that this leakage does not necessarily produce broken porcelains.

In conclusion it may be stated that on account of the difficulties incident to the use of cement between the electrode wires and porcelains in spark plugs, the elimination of the cement entirely and the use of a mechanical seal at the top of the porcelain is greatly to be desired. The mechanical stress incident to the use of such seals should be localized at the top of the plug. The type of porcelain developed by the bureau has sufficient strength to withstand the necessary stresses. At least two manufacturers of spark plugs are following up the suggestions of the bureau along this line and tests of these plugs are to be carried out as soon as samples are received.

TABLE I.—*Effect of cements on electrode wires.*

Cement No.	Sodium silicate 40° Bé., c. c.	Water, c. c.	Solid.		Effect of heating to 1,000° C.	
			Grams.	Kind.	Oxidation of wire.	Description of cement.
1	5	5	30	Powdered silica	Very bad	Hard, strong, slightly porous. Part of material had run down the wire.
2	10		30	do	do	Do.
3	5	2		Barium sulphate	Eaten through	Part of material had melted and run down wire, leaving a hard blue mass behind.
4	7			do	do	Do.
5	5	5	30	do	None	Hard, strong, very slightly porous.
6	10		30	do	do	Hard, strong, not porous.
7	5	9	15 15	Kaolin Al. oxide	Very bad	Soft, weak, porous.
8	10	4	15 15	Kaolin Al. oxide	do	Do.
9	5	13	30	do	do	Soft powdery mass.
10	10	8	30	do	do	Do.
11	10	8	30	Kaolin calcined at 500° C	do	Hard, weak, porous.
12	10	16	30	Kaolin calcined at 750° C	do	Do.
13	10	14	30	Kaolin calcined at 1,000° C	do	Soft weak, porous.
14	10	12	30	Kaolin calcined at 1,250° C	do	Medium, hard, weak, porous.
15	Wire dipped in 40° Bé. sodium silicate				do	
16	Clean wire				Slight	

TABLE 2.—*Gas leakage around electrode wires in spark plugs that had been used for 1¾ hours in a Liberty engine.*

Porcelain broken.	Porcelain not broken.	Leakage bad.	Leakage moderate.	No leakage.	Wire loose.	Wire easily pulled out.
12		[1] 6			4	1
				6		
	28	17			12	9
			8		3	2
				3		
Total 12	28	23	8	9	19	12

[1] Part of these may have been broken while the plugs were being removed from the engines.