REPORT No. 107

A HIGH-SPEED ENGINE PRESSURE INDICATOR OF THE BALANCED DIAPHRAGM TYPE

By H. C. DICKINSON and F. B. NEWELL
Bureau of Standards

REPORT No. 107.

A HIGH-SPEED ENGINE PRESSURE INDICATOR OF THE BALANCED DIAPHRAGM TYPE.

By H. C. Dickinson and F. B. Newell.

Bureau of Standards.

RÉSUMÉ.

This report was prepared for the National Advisory Committee for Aeronautics and describes a pressure-measuring device especially adapted for use in mapping indicator diagrams of high-speed internal combustion engines. The cards are obtained by a point-to-point method giving the average of a large number of engine cycles. The principle involved is the balancing of the engine cylinder pressure against a measured pressure on opposite sides of a metal diaphragm of negligible stiffness. In its application as an engine indicator the phase of the engine cycle to which a pressure measurement corresponds is selected by a timing device. The report discusses briefly the errors which must be avoided in the development of an indicator for light high-speed engines, where vibration is serious, and outlines the principles underlying the design of this instrument in order to be free of such errors. A detailed description of the instrument and accessories follows, together with operating directions. Specimen indicator diagrams are appended. The indicator has been used successfully at speeds up to 2,600 revolutions per minute, the highest speed engine available for trial. Its sensitivity is approximately that of a standard 6-inch dial gauge of the Bourdon tube type.

INTRODUCTION—REASONS FOR THE DESIGN.

Prior to 1917 there were available several types of instruments for the measuring and recording of pressures in internal combustion engine cylinders. Some of these were refinements of the conventional pressure indicator designed for low-speed steam engines while others were designed primarily for high-speed work with a view of minimizing the effects of inertia. These instruments were found to be useful for various classes of work, depending upon their design and characteristics, although none of them had found more than very limited application in a comparatively few laboratories.

Some of the inherent difficulties which have prevented the development of a wholly convenient and successful high-speed indicator are inertia, friction, and back lash in moving parts where mechanical means of recording are adopted; inertia and vibration of the system when a photographic method of magnification is applied to an instrument mounted on the engine; time lag of the gases in the connecting tube where a photographic apparatus is mounted independently of the engine and connects to it by a flexible tube; as well as the usual mechanical difficulties in the construction and operation of instruments of this class.

It should be noted, too, that these difficulties are very greatly increased in the case of the aircraft engine, which usually must be mounted on a more or less flexible stand and in which at best the mechanical vibrations of the parts are excessive, due to their light weight and lack of rigidity.

An important mechanical consequence of this excessive flexibility of the engine structure seems to have been overlooked, since, so far as the authors know, it has not been discussed in the literature or taken account of other than accidentally in design of any indicator. To illustrate this effect, assume an indicator whose moving parts are mounted on the head of an engine cylinder. In order to reduce the effect of inertia, the range of motion of the piston or diaphragm is reduced as much as practicable and the motion magnified either mechanically or optically so

as to give a readable scale. It should be noted that the motion actually recorded is always the relative motion between the movable part of the indicator and the (supposedly) fixed part mounted rigidly on the cylinder head. But if the cylinder head itself flexes under pressure or mechanical vibration, this motion of the fixed support relative to the movable piston is recorded and magnified as well as the motion of the piston relative to its support. Hence it may happen that thus limiting the range of motion of the piston or heavy diaphragm and greatly magnifying the record, increases the bad effects of inertia on a light flexible engine cylinder since the motions of the cylinder head itself, relative to the moving member, are subject to the same degree of magnification.

The rapid increase in volume and scope of experimental work on gasoline engines, particularly of aircraft engines, due to the impetus given by war conditions, intensified the need for suitable indicators and several laboratories undertook their development.[1] The Bureau of Standards was particularly interested in securing an indicator suited to use in the altitude chambers[2] where aircraft engines are operated for purpose of test and analysis of their performance under reduced pressure and temperature simulating conditions of flight. The altitude chambers inclose only the engine, all controls and measuring apparatus being outside, whence in addition to all other requirements, it was essential that any indicator adopted should possess the feature of remote control and reading. For the purpose in hand, for general analysis of engine performance, accurate indicator cards are of more importance than are individual records of single cylinder cycles; therefore a point-to-point method can be employed.

A successful instrument[3] embodying the foregoing requirements has been developed and a half dozen of them have proved satisfactory for use under conditions of actual practice from 200 to 2,600 revolutions per minute (the highest engine speed available for test), and from 10 pounds per square inch below atmospheric pressure to 1,000 pounds per square inch above. The instrument has proved convenient in use and of high accuracy, being capable of measuring pressures to an accuracy comparable with that of the standard 6-inch pressure gauges used for recording these pressures. It is not only suited to the measurement of the pressures in internal combustion engines, but in any engine, compressor, or other machine in which gas pressures occur in successive cycles of the same form. For instance, the pressures occurring in the intake or exhaust manifold of a gasoline engine may be measured with the same instrument.

PRINCIPLE OF THE APPARATUS.

Fundamentally, the principles involved are the balancing of the cylinder pressure against a measured gas pressure on opposite sides of a metallic diaphragm of negligible stiffness and the indication or recording by means of a timing device of the instant at which equality of pressure occurs.

The indicator outfit thus consists of three parts: The pressure-balancing element, which is screwed into an opening in the engine cylinder as is a spark plug; the timing element, which is fastened securely to a revolving part of the engine; and the coordinating, measuring, and recording apparatus, which is located at any convenient place and is connected to the indicator and timer with wires and flexible pressure tubes. A very small portion of the engine cylinder gas whose pressure is to be measured surges back and forth through small, short water-cooled passages in the pressure element and transmits the cylinder pressure to the lower side of a thin metallic diaphragm which is clamped at its periphery. The deflection of this diaphragm is limited by two corrugated and perforated supports to a few thousandths of an inch. At least two instants in each cycle the pressure on the lower side of the diaphragm (cylinder pressure) is equal to the measured pressure which the operator has applied by means of gas supplied through a small copper tube to the space above the diaphragm. The timer selects that portion of the cycle, approximately 1 degree of arc, for which the measured pressures is to be made equal

[1] "High Speed Internal Combustion Engines," by Arthur W. Judge, Ch. V, Engineering, vol. 84, p. 570; vol. 102, p. 422. Auto Car, Feb. 2, 1907, p. 157. American Machinist, Nov. 29, 1906, p. 693; May 13, 1920, p. 1061. Horseless Age, Nov. 1, 1915, p. 418. Machinery, Dec., 1910. Journal of the Society of Automotive Engineers, Apr., 1920, p. 254.

[2] Report No. 44, National Advisory Committee for Aeronautics, "The Altitude Laboratory for Testing of Aircraft Engines."

[3] This indicator is manufactured by the American Instrument Co., Washington, D. C.

to the cylinder pressure. The coordinating apparatus indicates when the pressures are in balance, as will be explained. The pressures are measured on calibrated Bourdon pressure gauges, closed or open end mercury manometers, or any other accurate pressure-measuring instrument.

The indicator permits of plotting cylinder pressures from point to point in the cycle, giving at each point the average value from a number of cycles. It is suited only to application to engines operating under conditions sufficiently constant that successive cycles repeat their values of pressures within reasonable limits.

DETAILS OF CONSTRUCTION.

The mechanical details of design are best described by the drawings and photographs, figures 1 to 7.

The pressure element.—The pressure element is shown in figures 1, 2, and 3. A thin metal diaphragm (1) divides the chamber into two parts, the lower one communicating directly with the engine cylinder by screwing the threaded portion (2) into a spark-plug hole. The cylinder pressure is thus impressed on the diaphragm with a minimum of inertia or lag due to a long connecting passage. This close connection to the engine necessitates water-cooling, an annular circulation being provided (space 3).

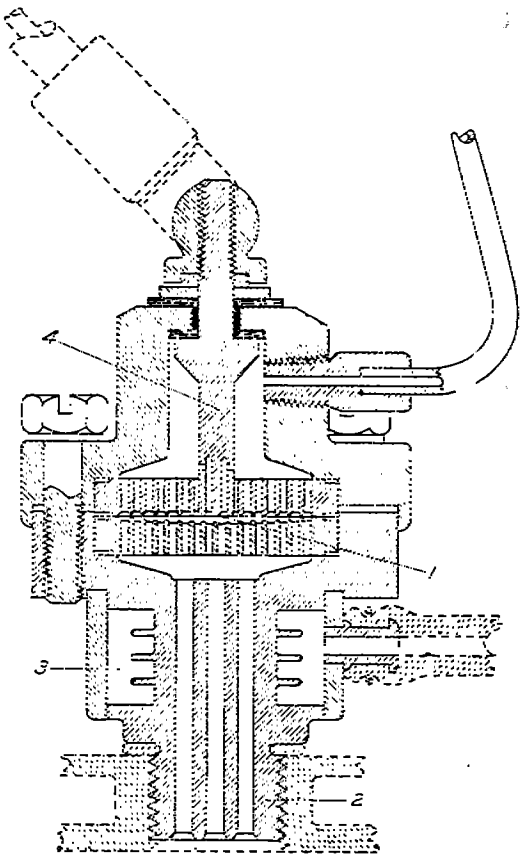

FIG. 1.—Pressure element: Principal section.

The balancing pressure impressed on the top of the diaphragm is supplied by compressed air or other gas conducted through small copper tubing to the capacity space forming the upper chamber of the instrument and transmitted from this space through the perforations in the support to the disk.

The motion of the diaphragm, when the pressures are out of balance, is limited to about 0.13 millimeter (0.005 inch) by upper and lower supports. These are circular plates of brass about 5 millimeters (three-sixteenths inch) thick, perforated with No. 60 drill holes and surfaced with concentric corrugations where they have contact with the diaphragm. The upper support is plane and the lower is concave, 0.005 inch less in thickness at the center than at the periphery. These supports prevent distortion of the diaphragm beyond the elastic limit under pressures for which the diaphragm is intended to be used. The instrument can be taken apart with little trouble to insert a new diaphragm when necessary.

It is important to bear in mind the actual operation of the diaphragm and the function fulfilled by the supports. Above the diaphragm is the controlled pressure, sensibly constant over many seconds or minutes. Below is the engine pressure, varying from that of explosion to that of intake suction, the frequency depending on the engine speed (at 3,000 revolutions per minute for a 4-cycle engine the frequency is 25 per second). Accordingly, the diaphragm vibrates many times a second between its supports, moving each time the cylinder pressure becomes greater or becomes less than the balancing pressure. At only two points in each cycle (in normal operation) is the pressure on both sides of the diaphragm balanced. Except for these instants, the diaphragm is pressed against one support or the other, according to which pressure is the higher.

The diaphragm is a metal disk about 30 millimeters ($1\frac{1}{4}$ inches) diameter and about 0.08 to 0.15 millimeter (0.003 to 0.006 inch) thick. When clamped in the annular supports the free diameter is about 25 millimeters (1 inch). Steel diaphragms have been used most often,

although phosphor bronze ones have given satisfactory service. A metal having the mechanical characteristics of steel without its susceptibility to corrosion would be desirable. Nickel-plated and silver-plated steel have been used recently with success.

The time of response of these diaphragms is extremely short, but difficult to calculate or measure with accuracy. Its order of magnitude may be determined as follows: The pressure necessary to displace the diaphragm from one support to the other (i. e., the total pressure which the elasticity of the diaphragm can support) is normally from 0.1 to 0.5 pound according to thickness. In the normal use of the instrument, before the difference in pressure on the two sides of the diaphragm has reached an amount readable on the gauges (i. e., 0.1 to 0.5 pound) the diaphragm will be subjected to a pressure difference greater than can be supported by the elasticity, and will be thrust against one plate or the other. The actual time lag will be the time required for the diaphragm to move into or out of contact when the above pressure difference is applied to it. This time can be calculated roughly and is so small as to have no appreciable effect in any condition met with in practice.

The position of the diaphragm against one support or the other would give merely qualitative indication of which of two pressures is the greater, and the operation which makes a measuring instrument of the device is the passage of the diaphragm from the one side to the other, thereby indicating equality (or near equality) of the unknown and the measured pressures. The movement of the diaphragm is recorded by making or breaking an electric circuit, and an examination of figure 1 will reveal the insulation of the center part (4) of the upper support from electrical connection with the rest of the instrument. This electrode is connected in series with a telephone as a detector and one side of a battery of which the other pole is grounded on the engine frame and therefore the diaphragm. When the diaphragm moves upward against the electrode it closes the circuit, clicking the telephone; when it moves down it opens the circuit, also clicking the telephone. Telephone clicks are thus the means by which the observer is informed every time that the pressure in the engine cylinder is just balanced by the measured pressure which is transmitted to the upper chamber of the pressure element.

The timer.—The pressure element described above gives a signal of equality of a measured pressure with a particular value of the pressure in an engine cylinder, normally twice for each cycle, but gives no indication of the phase at which these equalities occur. To fulfill this function the timer is an essential element of the mechanism. It operates either to locate the portion of the cycle corresponding to a particular pressure, or to select a specific point in the cycle and permit the adjustment of the measurable pressure so as to equal the cylinder pressure for this point. The object is attained by introducing in the electric circuit a rotating member which closes the circuit only for about 1 degree of arc during each cycle, this member being in synchronism with the engine cycle and adjustable with respect to the phase of the latter.

The timer is shown in figures 4 to 7. The rotating part, an insulating disk, must be fastened rigidly to some part of the engine revolving at crank-shaft or cam-shaft speed. In the periphery of this disk is inlaid a narrow strip of brass extending over one-half degree of arc and serving as an electric contact, when it rotates past a fixed brush. The brush is a piece of hardened steel, fastened to the end of a flat spring so that it will rub on the periphery of the disk. It is carried by a graduated ring mounted on a ball-bearing concentric with the rotating disk. This ring can be rotated by hand and set at any desired angle with an index line on a portion of the frame that is immovable with respect to the engine frame.

An auxiliary device on the timer measures the angle in the engine cycle at which the ignition spark passes. This has no direct bearing on the use of the apparatus as a pressure indicator, but is extremely useful in mapping the ordinary indicator diagram of an internal combustion engine, because of the great importance of locating accurately in such a diagram the moment of firing the charge. The provision for this measurement is shown in figure 7. It adds very little complication to the timer.

Coordinating apparatus.—The auxiliaries to the pressure element and the timer may be divided into two general classes—those having to do with the control and measurement of pressure and those pertaining to the electric circuit. As used for measurements in the labora-

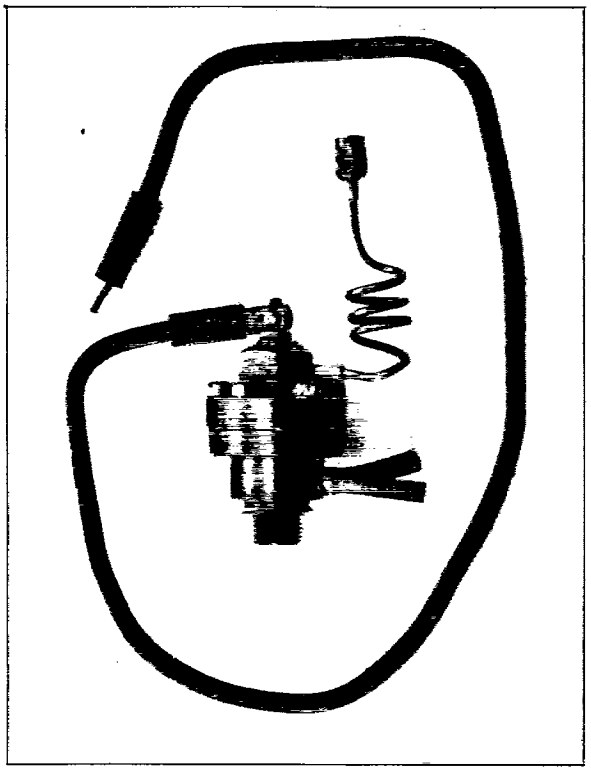

FIG. 2.—PRESSURE ELEMENT: ASSEMBLED.

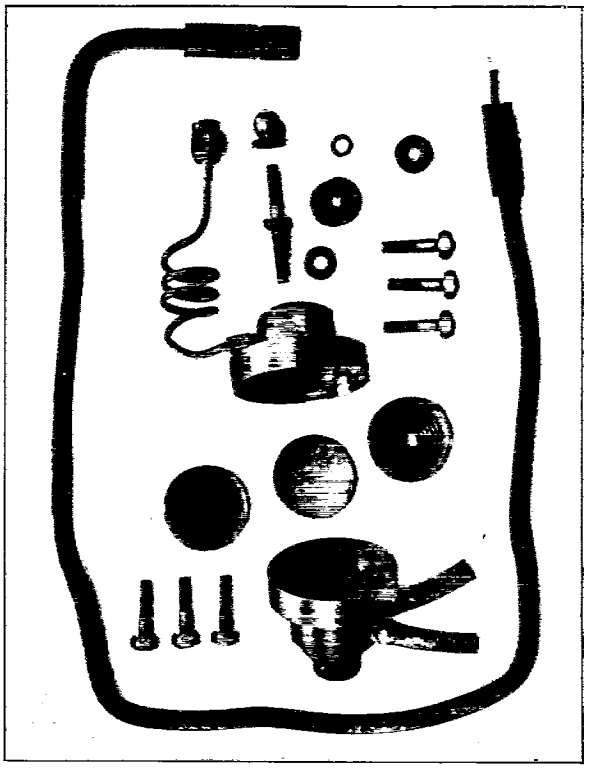

FIG. 3.—PRESSURE ELEMENT: PARTS.

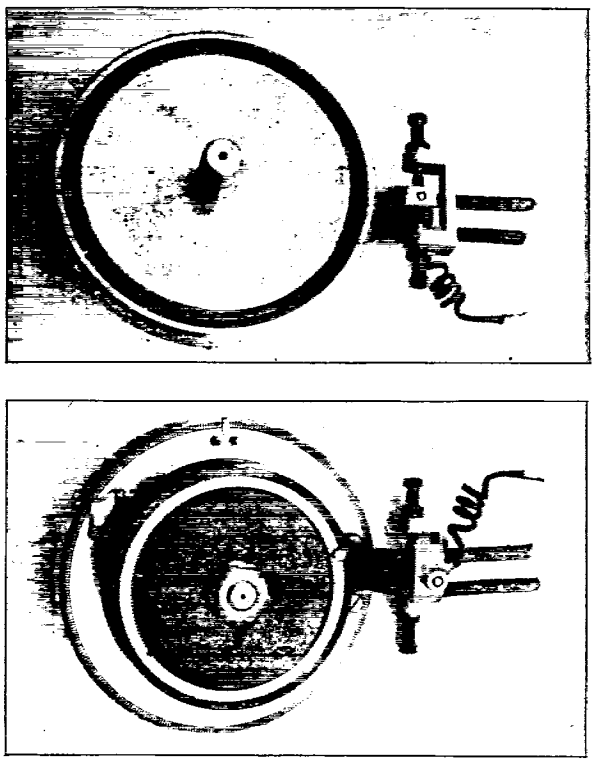

FIG. 4.—TIMER: FRONT AND REAR VIEWS.

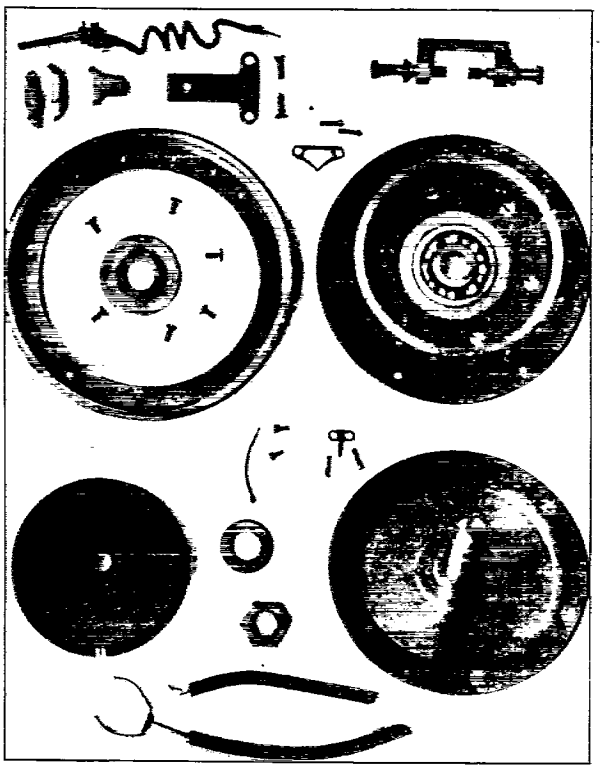

FIG. 5.—TIMER: PARTS.

tories of the Bureau of Standards, the source of high pressure is a tank of compressed air, or liquid CO_2 and that of reduced pressure is a water aspirator. Control is effected by a number of one-eighth-inch needle valves. The measuring instruments are Bourdon tube dial gauges of suitable ranges and a mercury manometer for pressures from subatmospheric to two atmospheres absolute. A standard 100-pound test gauge is used between 15 and 100 pounds per square inch above atmosphere, and a standard 1000-pound test gauge for all pressures from 100 to 1000.

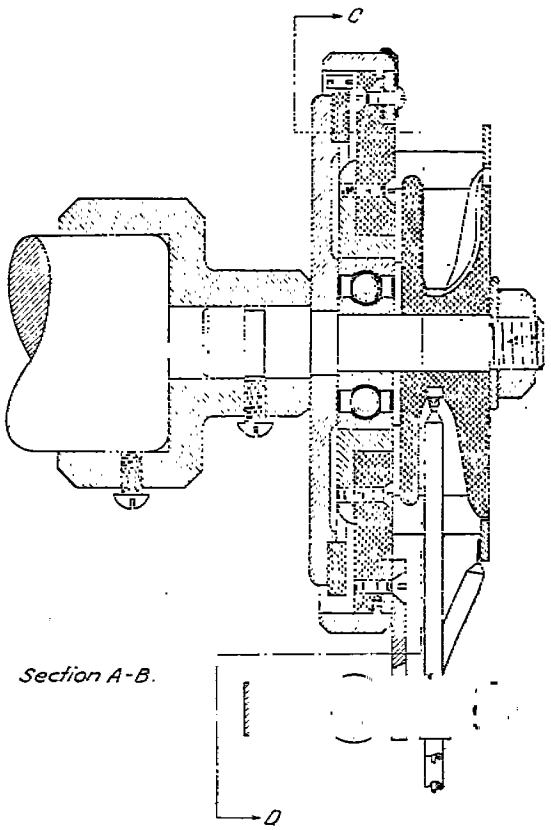

FIG. 6.—Timer: Principal section, parallel to axis.

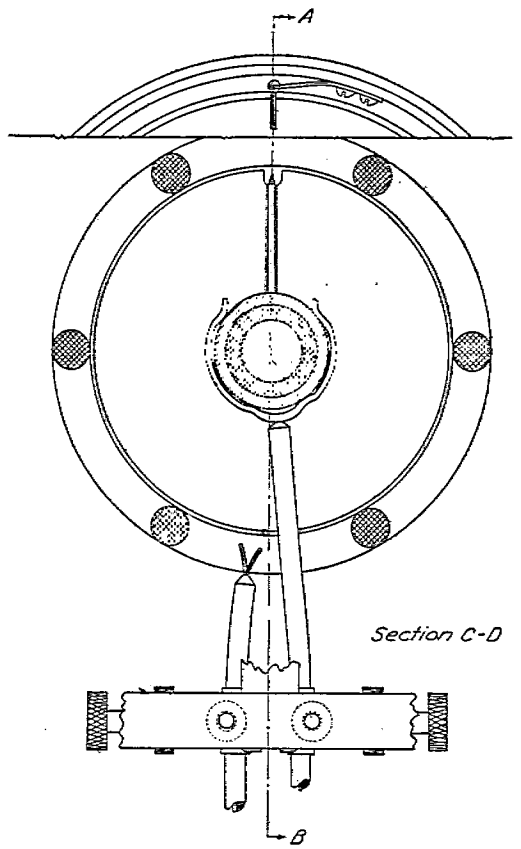

FIG. 7.—Timer: Section showing the segment with contact brush (at the top of the figure), and the rotary spark gap for locating the angle of ignition.

A schematic diagram of the apparatus is given in figure 8. The actual arrangement in the laboratory can be varied as needed to suit conditions. The engine cylinder may be quite remote from the remainder of the apparatus. In figure 8 the small tank near the right is filled to any desired pressure from the supply reservoir and then serves as the source of pressure. The water aspirator is diagramed next to the mercury U gauge. Connected to the same water line may be noted the cooling system for the lower part of the pressure element. The mechanical linkage of timer and piston is shown schematically.

The electrical connections are shown in the left-hand portion of figure 8. The essential elements already described include the telephone detector, the battery, the diaphragm and its contact electrode, and the timer contact. Auxiliaries shown in the diagram are the condenser and numerous switches, likewise the auxiliary circuit for measuring the position in the cycle when ignition occurs (see closing paragraph of the description of the timer). The condenser is used to modify the telephone action as required. When pressures in a high-speed engine are being measured, the timer segment is in contact with the brush so short a time that in a simple circuit the current would not build up in the telephone receiver to a value sufficiently high to cause a click surely audible. In this case a condenser is shunted across the phones so that when the circuit is closed it is charged and can discharge through the phone, intensifying the sound. When maximum pressures are being measured at slow speeds, the snap of the

receivers is disagreeably loud and sharp. To make this sound dull and yet audible, a larger condenser is shunted across the phones. Condensers of one-fourth, one-half, and 1 microfarad capacity are found suited to a circuit which includes a 4.5 or 6 volt battery and a pair of 70 to 80 ohm telephone receivers. For location of faults in the circuit it is very convenient to have switches short circuiting the indicator and the timer in addition to those actually necessary for operation.

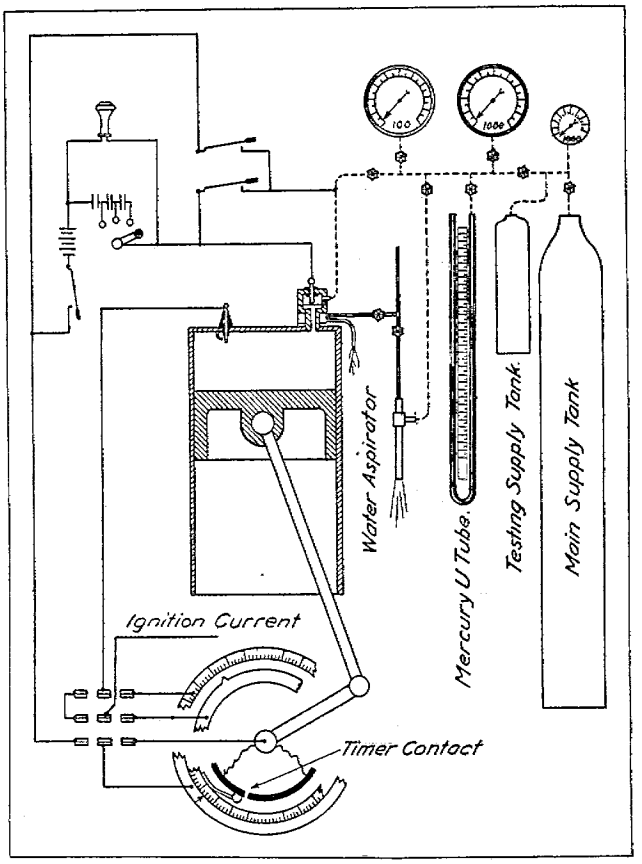

FIG. 8.—Schematic diagram of indicator assembly. Pressure element, timer, pressure system and electrical circuits in their relation to an engine cylinder.

CALIBRATION AND INSTALLATION.

The sensitivity and zero reading of the pressure element should be checked occasionally. By the first is meant the smallest pressure difference which will move the diaphragm sufficiently to cause a telephone click. By the zero reading is meant the difference in the absolute pressures on opposite sides of the diaphragm when it just makes or breaks contact with the electrode. This may be appreciable, owing to distortion of the diaphragm in clamping it into place or to any other lack of symmetry in its elastic behavior.

The zero reading is determined by leaving one side of the diaphragm open to the atmosphere and measuring the pressure on the other side required to obtain a balance. Whenever the zero reading becomes large, or the sensitivity unduly poor, it is time to replace the diaphragm.

The timer scale must be read in relation to engine-crank angle, or preferably set to zero for zero crank angle from piston dead center. A pair of adjusting screws which hold the timer arm in place facilitate this setting.

Leaks in the pressure system will introduce differences between pressures read on the gauges and those actually impressed on the diaphragm, due to pressure drop in the connecting tubes. Frequent tests for leaks are thus a necessary precaution, although leaks must be relatively large to have a significant effect.

DETAILS OF OPERATION.

While the precision of setting of the instruments is approximately equal to the sensitivity of the pressure gauges, the degree of certainty with which an observer can set for the mean cycle pressure at a given phase depends upon the degree of uniformity of the engine performance. This varies widely in different parts of the cycle, since the suction and compression strokes repeat with but small variations, while explosion and expansion pressures may be decidedly erratic.

The simplest measurement with the instrument described in this paper is that of maximum or minimum pressure occurring in the cycle. For such a measurement the timer is short circuited. Suppose, for example, a determination is to be made of the maximum explosion pressure occurring, on the average, in the operation of the cylinder, and suppose, for simplicity, that all cycles were alike—i. e., all these maxima identical in magnitude; then the behavior of the diaphragm will be as follows: When atmospheric pressure is impressed on the top of the diaphragm, the contact with the upper support and electrode will be broken only during a small portion of the cycle. As the pressure is increased, the diaphragm will be forced down earlier and return later in the cycle. When the pressure so applied has been increased to a value near the maximum engine pressure, the diaphragm will remain against the lower support throughout the cycle except for a very small interval near this maximum. Then the diaphragm will come up against the upper electrode, clicking the telephone, and will return almost immediately, clicking it again. There will thus be pairs of clicks a few milliseconds apart, succeeding silent intervals equal to nearly the period of the cycle. As the controlled pressure is raised still further, the pairs of clicks will merge into one, just at the maximum, and disappear above it. By slight variations of the controlled pressure, when near the correct value, it would be easy to make the measurement desired.

The conditions of actual practice preclude the simplifying assumption that the explosion pressures of many cycles are identical, and the range of variation is sometimes rather considerable. Under these circumstances as the measured pressure is increased to a value exceeding the lower values of maximum explosion pressures, the latter contribute no clicks of the telephone. Accordingly, as the pressure is increased from a low value where the telephone receiver clicks twice for every engine cycle, successive pairs of clicks merge and vanish so that the frequency of clicks gradually diminishes until the telephone is completely silent when the measured pressure exceeds the greatest of the explosion pressures. By exercising judgment as to the relative frequency of the telephone clicks with different measured pressures, the observer can reach a close estimate of the average of the maximum explosion pressures.

For measuring a pressure at any part of the engine cycle where the value is neither maximum nor minimum, it is necessary to have the timer in circuit.

As has been explained, the electrical circuit is closed in the indicator head for part of the engine cycle and open for the remainder, the point of closing and opening being dependent upon the gauge pressure applied by the operator. The telephone circuit is, however, closed only at the single instant—i. e., 1° of the timer contact. Thus the timer contact serves as an index to determine whether the indicator circuit is open or closed at a selected phase of the cycle; i. e., to indicate whether at this phase the gauge pressure is above or below the cylinder pressure. Thus if the engine operation is uniform from cycle to cycle, and if the gauge pressure is lower than the cylinder pressure at the phase of the cycle, the diaphragm will be up, the indicator contact closed, and a click in the telephone will occur at each closing of the circuit by the timer. If the gauge pressure is raised above the cylinder pressure at the selected angle, the circuit will not be closed in the pressure element and the timer at the same instant and, therefore, there will be no sound in the telephone.

The point of balance of the two pressures is therefore marked by a definite change in action of the telephone from clicking every engine cycle to complete silence. When the successive cycles do not repeat values of pressure within very close limits, the abrupt change from clicks to silence is replaced by a range of pressure over which clicking becomes irregular as the

gauge pressure is raised, the clicks ceasing entirely at a pressure equal to that of the highest cylinder pressure occurring in any cycle at this phase.

The timer can be revolved at either cam-shaft or crank-shaft speed, the choice being determined to a considerable extent by the construction of the engine with respect to ease of attaching such an extraneous mechanism. The cam-shaft speed is much the simpler for the operator to interpret the telephone clicks. In this case the complete rotation of the timer corresponds to one engine cycle, and the contact segment selects homologous parts of each cycle. When the timer operates at crank-shaft speed it makes contact twice in each cycle,

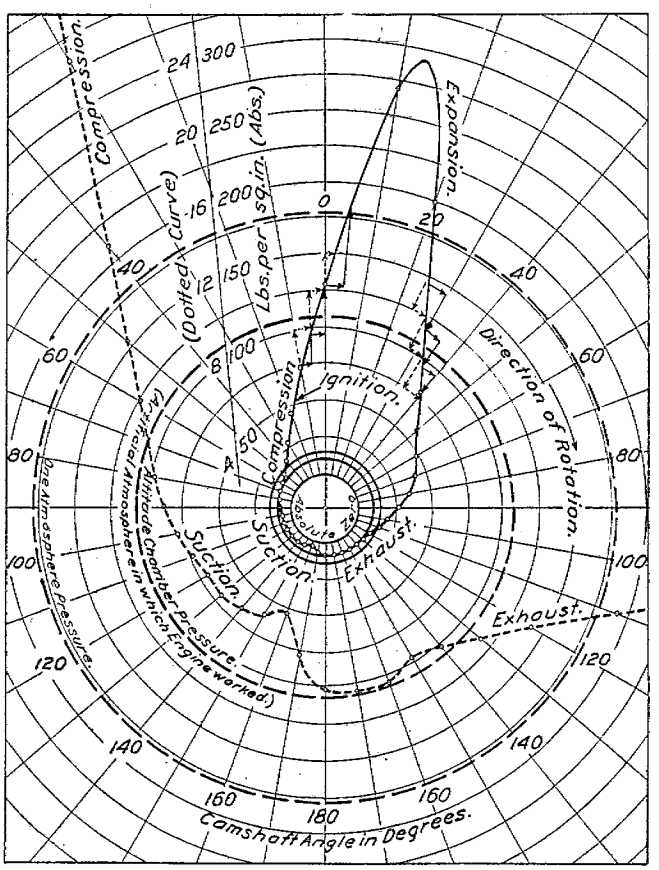

FIG. 9.—Specimen indicator diagram in polar coordinates, pressures *vs.* cam-shaft angle. The diagram is shown by the solid line, to which the right-hand pressure scale applies. A reproduction of that part of the curve near the pole is shown in the dotted curve, to which the 12½ times magnified left-hand scale applies.

and alternate contacts only are homologous. The two homologous sets are represented by alternate clicks of the telephone, and the observer sets for disappearance of each alternate click with about the ease as for disappearance of all clicks. The double value of pressure corresponding to each angle is shown by figures 10 and 12, more fully explained in the next section.

The manipulation of the indicator outfit is as follows: The operator wears a pair of watch-case telephone receivers mounted in the usual switchboard head harness, and keeps his hands on two valves in the pressure line, one admitting compressed air from the reservoir and the other relieving the pressure to the atmosphere or aspirator. With the timer set, say, at zero crank angle, he watches the appropriate gauge and manipulates the valves according to his interpretation of the signals received in the telephones. If there appears to be an appreciable range of pressure over which the clicking is irregular, he estimates the mean of this range and makes a record of the gauge reading. The timer is then set to the next observing point

and the process repeated. The timer may be set and read by the same observer or by a second one. The process of mapping a complete indicator diagram advances so much more rapidly with two as to be desirable, so as to reduce to a minimum the likelihood of large changes in the conditions of engine performance, with the consequent lack of coordination of the earlier and later portions of the diagram.

A convenient record of the quantities observed is a polar graph with degrees of crank angle read directly from the timer and radius vector of pressure read directly from the gauge. This pressure-angle plot can be transformed easily to pressure time or pressure volume, as desired.

SPECIMEN INDICATOR DIAGRAMS.

Representative charts and data sheets are appended to illustrate the results obtained with the instrument. In all the charts two pressure scales are used, one sufficiently close to include the whole range on the sheet and one very much more open, at least 10 times magnified, upon which scale the pressures near zero are plotted to show characteristics quite indistinguishable on the other scale.

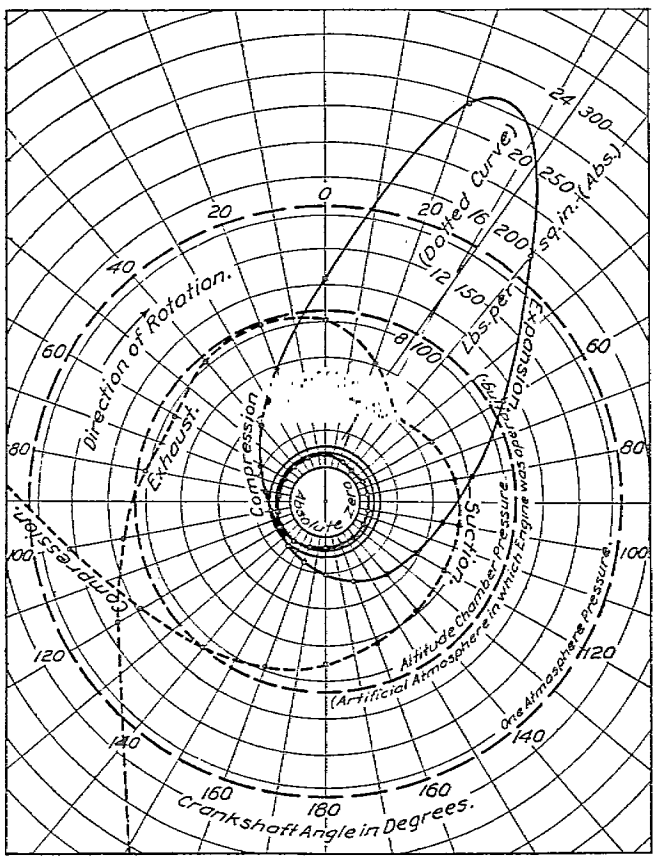

FIG. 10.—Specimen indicator diagram in polar coordinates, pressures *vs.* crank-shaft angle. The diagram is shown by solid line, to which the right-hand pressure scale applies. A reproduction of the loop near the pole is shown in the dotted curve, to which the 12½ times magnified left-hand scale applies.

Figures 10 and 12 show diagrams taken with the timer mounted on the crank shaft. It will be noted that the diagram loops twice around the pole, giving two pressure values for each value of crank-shaft angle. The method of securing such a diagram has been discussed in the previous section. The pressure time curves corresponding to figures 9 and 10 are shown in figures 11 and 12. A pressure volume diagram is given in figure 13. A diagram in which the logarithms of the pressures and volumes are plotted as suggested by Clayton,[4] is shown in

[4] A. S. M. E. Journal, Apr., 1912.

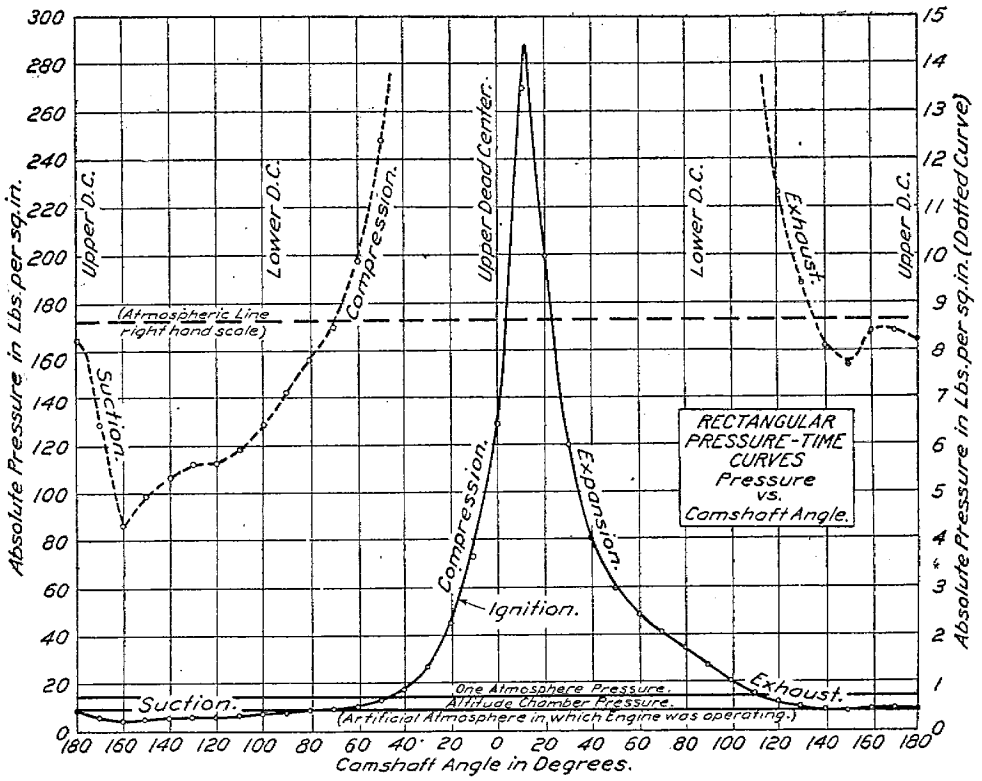

FIG. 11.—Specimen indicator diagram in rectangular coordinates, transformed from figure 9. The diagram is shown by the solid line, the corresponding pressure scale being numbered on the left margin. The portion of the diagram near zero pressure is reproduced in the dotted curve on a scale magnified 20 times, the scale being noted in the right margin.

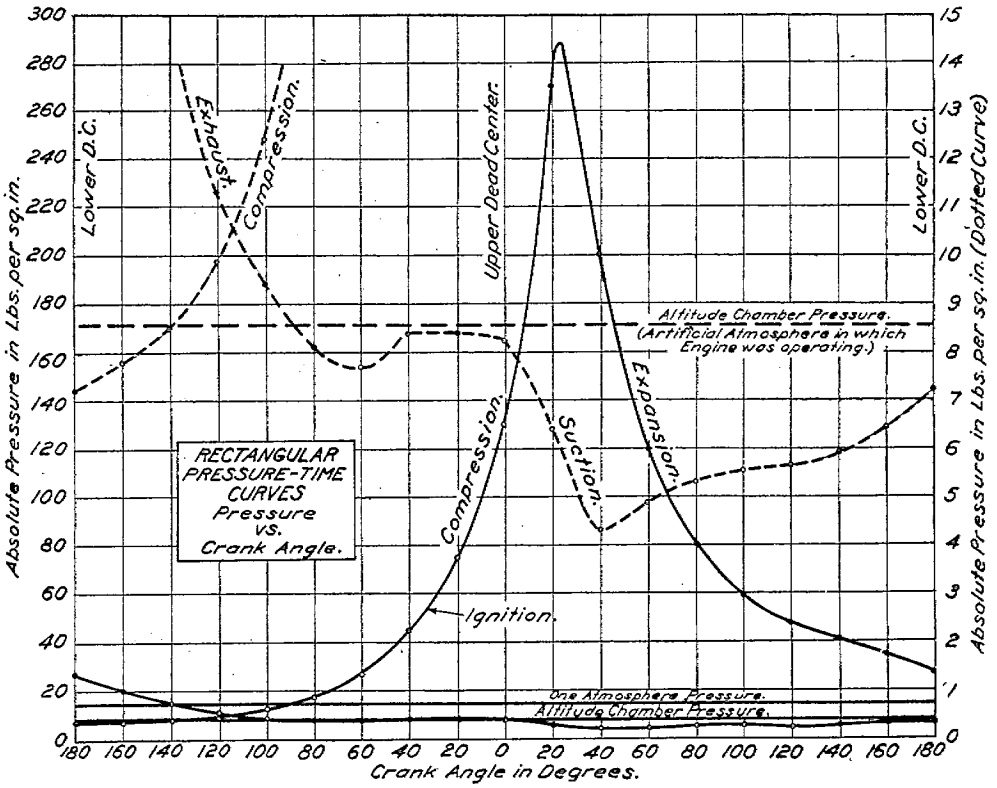

FIG. 12.—Specimen indicator diagram in rectangular coordinates, transformed from figure 10. The diagram is shown by the solid line, the corresponding pressure scale being numbered on the left margin. The portion of the diagram near zero pressure is reproduced in the dotted curve on a scale magnified 20 times, the scale being noted in the right margin.

figure 14. The straight portions of this diagram show the limits between which the gas obeys the following law: $PV^n = \text{constant}$. This plot facilitates the determination of the value of "n," which is the slope of the line.

DATA SHEET.

(Figs. 9 to 14.)

Pressure measurements made with high-speed engine pressure indicator of the thin diaphragm type.

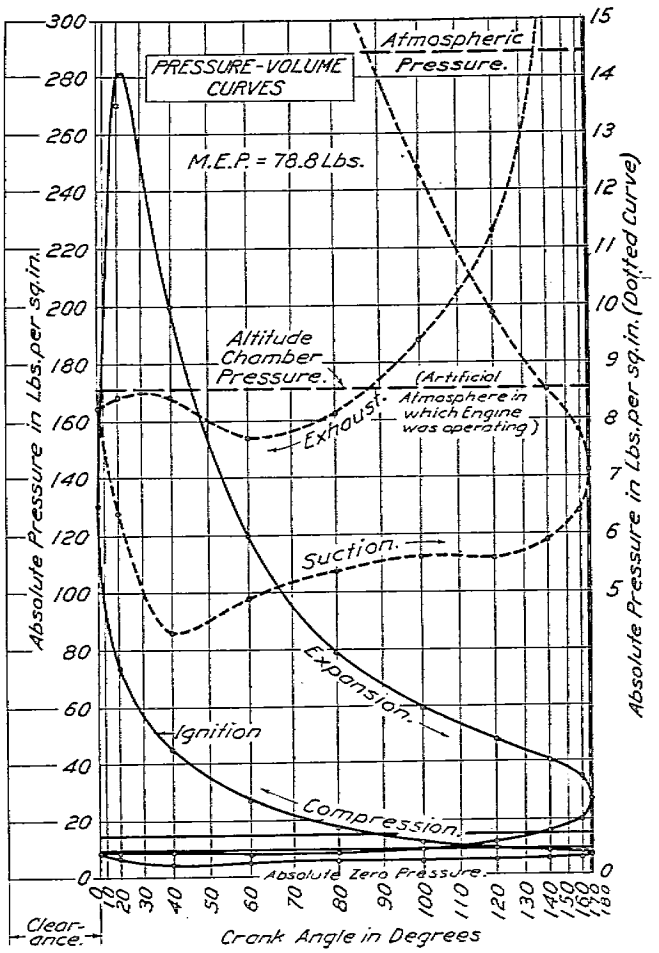

FIG. 13.—Specimen indicator diagram in the usual pressure volume scaling, transformed from data of Figures 9, 10, 11, and 12 (all from same observed data). The lower loop of the diagram is reproduced magnified 20 times, in the dotted curve, to which the scaling in right-hand margin applies.

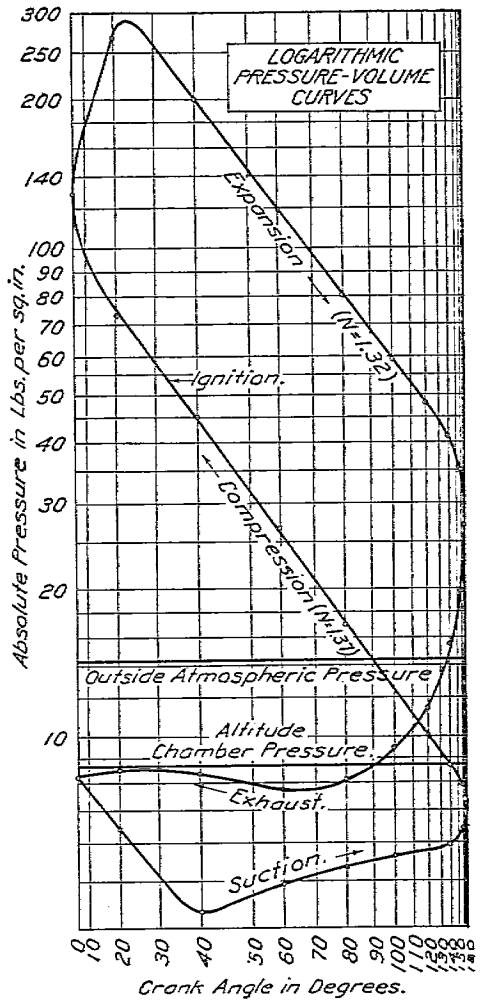

FIG. 14.—Indicator diagram of Figure 13 redrawn in logarithmic scaling. Lack of curvature of the principal parts of compression and expansion strokes shows validity of exponential relation pv^n=constant in representing them.

Hispano Suiza airplane engine running 2,200 revolutions per minute in altitude chamber simulating operating conditions at 15,000 feet altitude. Pressure of this artificial atmosphere 8.6 pounds per square inch.

Engine measurements:

	Inches.
Connecting rod length	8.93
Bore	4.72
Stroke	5.12
Clearance (equivalent of volume in inches of stroke)	0.97
Compression ratio	6.3

Indicator zero, 0.6 pound per square inch.

	Crank angle (°).	Observed pressures (pounds per square inch).		Absolute pressures (pounds per square inch).		Piston stroke—corrected for clearance (inches).	Crank angle (°).
	180	13.0	−6.6	27.0	7.2	6.08	180
	160	6.0	−6.0	19.8	7.8	5.99	160
	140	1.6	−5.3	15.4	8.5	5.64	140
	120	2.5	−3.9	11.3	9.9	5.09	120
	100	−1.4	−4.4	12.4	9.4	4.33	100
	80	−3.0	−5.7	16.8	8.1	3.44	80
	60	12.8	−6.1	26.5	7.7	2.53	60
	40	31.0	−5.4	45.0	8.4	1.72	40
	20	59.5	−5.4	73.5	8.4	1.18	20
	0	115.	−5.6	129.	8.2	.97	0
	20	225.	−7.4	255.	6.4	1.18	20
	40	185.	−9.5	200.	4.3	1.72	40
	60	105.	−8.9	120.	4.9	2.53	60
	80	66.0	−8.5	80.0	5.3	3.44	80
	100	45.0	−8.2	59.0	5.6	4.33	100
	120	34.0	−8.2	48.0	5.6	5.09	120
	140	27.0	−7.9	41.0	5.9	5.64	140
	160	21.0	−7.4	35.0	6.4	5.99	160
	180	13.0	−6.8	27.0	7.0	6.08	180
Maximum pressure Limits	.....	280-230	.....	294-244			
Maximum pressure Average	.....	260	.....	274			

Readings made to the nearest 0.1 pound per square inch from absolute zero to 20 pounds per square inch gauge; to the nearest 0.5 pound per square inch from 20 to 100 pounds per square inch gauge; and to the nearest 1 pound per square inch for pressure over 100 pounds per square inch.