REPORT No. 98

DESIGN OF WIND TUNNELS AND WIND TUNNEL PROPELLERS, II

By F. H. NORTON and EDWARD P. WARNER
Langley Memorial Aeronautical Laboratory
National Advisory Committee for Aeronautics
Langley Field, Va.

REPORT No. 98.

THE DESIGN OF WIND TUNNELS AND WIND TUNNEL PROPELLERS, II.

By F. H. Norton and Edward P. Warner, National Advisory Committee for Aeronautics.

SUMMARY.

This report is a continuation of National Advisory Committee for Aeronautics Report No. 73, and was undertaken at the Langley Memorial Aeronautical Laboratory for the purpose of supplying further data to the designer of wind tunnels. Particular emphasis was placed on the study of directional variation in the wind stream. For this purpose a recording yawmeter, which could also be used as an air speed meter, was developed, and gave very satisfactory results. It is regrettable that the voltage supplied to the driving motor was not very constant, due to varying loads on the line, but as this motor was of a lightly loaded induction type, the variation in speed was not as large as the variation in voltage. The work was carried on both in a 1-foot model and the 5-foot full-sized tunnel, and wherever possible a comparison was made between them. It was found that placing radial vanes directly before the propeller actually increased the efficiency of the tunnel to a considerable extent. The placing of a honeycomb at the mouth of the experimental portion was of the greatest aid in improving the flow, but, of course, somewhat reduced the efficiency. Several types of diffusers were tried in the return air, but only slight improvement resulted in the steadiness of flow, they not being nearly as effective as the honeycomb.

APPARATUS.

The efficiency of the tunnel and the slip of the propeller were determined by the same method as described in Report No. 73, but to better record the fluctuations in velocity and direction a recording instrument was constructed. This instrument, as shown in Figs. 1 and 2, consists of a thin mica diaphragm whose movement rotates a very light spindle containing a small silvered mirror. Light from an illuminated slit is transmitted by a lens to this mirror and the reflected beam is then focused on a moving photographic film so that any movement of the mica diaphragm is recorded as a continuous curve. By this method any small and rapid variation in the air flow of the tunnel is indicated and recorded by means of a Pitot-static tube which is connected to the two compartments separated by the diaphragm, and any change in direction is recorded in the same way by connecting the sides of a yawhead to the compartments on opposite sides of the mica diaphragm. The Pitot and the connecting tubes are made comparatively large so that any rapid fluctuation in velocity can be immediately transmitted to the diaphragm without damping or lag. Over 50 records were taken but only a few typical ones are reproduced here. Numerous experiments on the efficiency of tunnels and on speed fluctuation have previously been made in England.[1], [2], [3]

EFFICIENCY AND SLIP WITH NEW PROPELLER.

In order to give a more even flow of air in the exit cone a new propeller was designed for the model tunnel having a larger pitch at the tip so that the air in this portion would be drawn through with a relatively greater velocity. In every other respect this propeller is very similar to the propeller used in the test described in Report No. 73, which, owing to a piece of wood being dropped in the running tunnel, was completely destroyed. In Fig. 3 is shown the efficiency of this propeller when working in a parabolic cone and in a straight cone. It will be noted that in the same way as with the first propeller the straight cone is considerably more

[1] An Investigation into the Steadiness of Wind Channels, by L. Bairstow and Harris Booth: British Advisory Committee for Aeronautics, R. & M. 67, September, 1912.

[2] Experiments on Models of a "Duplex" Wind Channel, by T. E. Stanton and J. H. Hyde: Brit. A. C. A., R. & M. 522, November, 1917.

[3] Reports on Tests of a Model of the Proposed 7-foot Wind Channel at the R. A. E., by C. G. Sandison and W. K. Alford: Brit. A. C. A., R. & M. 574, December, 1918.

efficient at high speed than the parabolic cone. In Fig. 4 is shown the slip of this propeller in the parabolic cone and in the straight cone and it is noted that the slip is less at high speeds for the straight cone. It is then evident that the straight cone is aerodynamically superior to the parabolic cone, in addition to being easier to build.

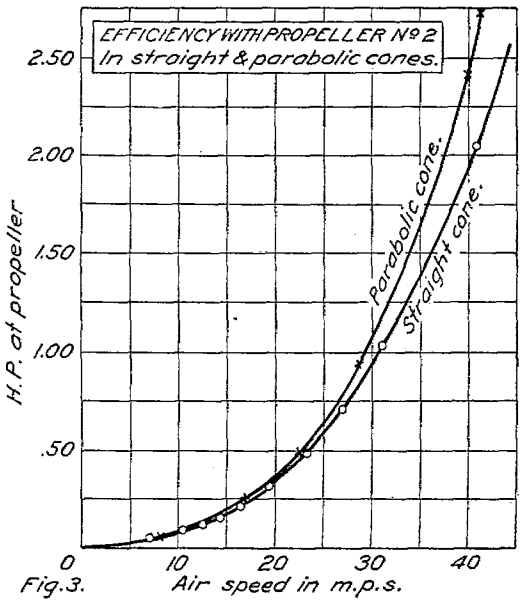

Fig.3.

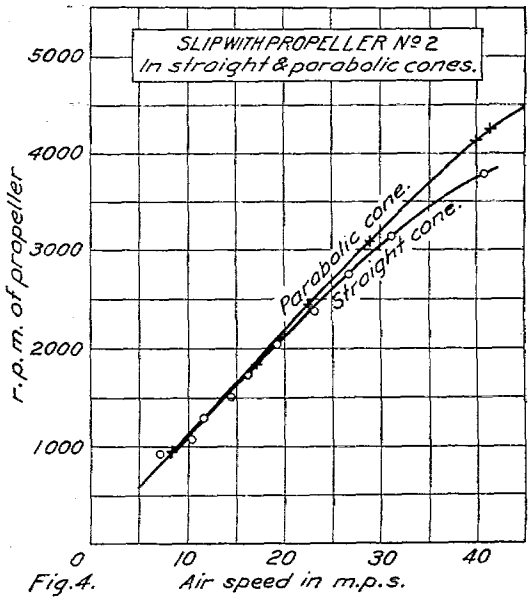

Fig.4.

EFFECT OF SIZE OF THE ROOM.

All the test runs described in Report No. 73 were conducted in a large room, approximating to free-air conditions. In the tests described in this report a temporary room was built around the tunnel, representing to scale the building provided for the 5-foot N. A. C. A. wind tunnel; and all runs except those shown in Figs. 3 and 4 were made in this model room. The cross section of the model room and the wind tunnel are shown in Fig. 5. For the same power this room decreased the air speed from 69 to 59 miles per hour or a decrease of 14.5 per cent. In the small room the maximum variation of speed was ± 7 per cent and the maximum variation in direction was $\pm 10°$. The air speed records show that for the first 20 seconds after starting, in the large room, and for the first 10 seconds in the small room, the air speed is very steady, and that the fluctuations suddenly appear at a definite time and will be indicated on the record. This appearance of sudden fluctuations seems to indicate that the large part of the speed fluctuations are due to the disturbed air from the propeller as it returns through the room to the entrance cone.

EFFECT OF RADIAL VANES.

Eight radial vanes 3 mm. thick and 450 mm. deep were placed symmetrically in the exit cone immediately before the propeller. These vanes joined in the center in a stationery spinner which was of the same diameter as the propeller base. (Fig. 6.) These vanes actually increased the speed of the air in the tunnel for the same power by 5 per cent, but the fluctuations in direction and velocity remained unchanged. In order to determine what part of the vane gave the increased efficiency, 25 mm. was cut off of the outer end of each vane and the run repeated which gave a 3 per cent increase in speed for the same power over the tunnel with no vanes. Again the vanes were cut off on the end 75 mm. and in this case the same speed was obtained as with the tunnel without vanes. This seems to show that it is the whole area of the vane which acts as a straightener for the air flow and that no particular part is especially valuable in increasing the efficiency of the tunnel. Eight additional vanes 3 mm. thick were then placed along the inner surface of exit cone, each vane being 75 mm. wide. This distribution of vanes decreased the speed by 12 per cent for the same power and the variation in speed was ± 6 per cent

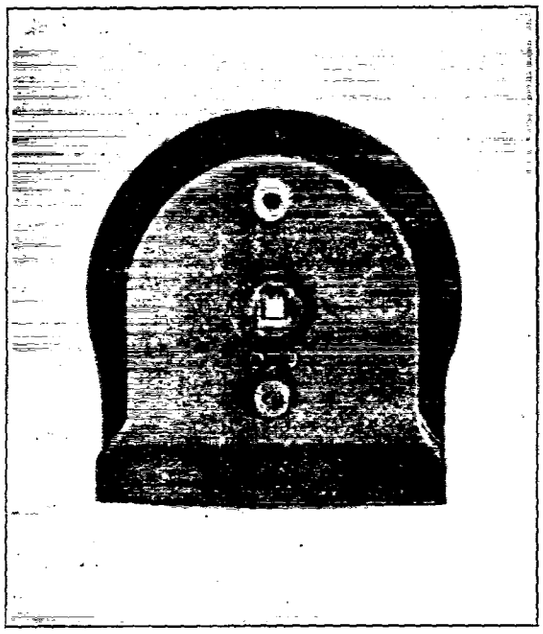

FIG. 1.—RECORDING AIR SPEED METER.

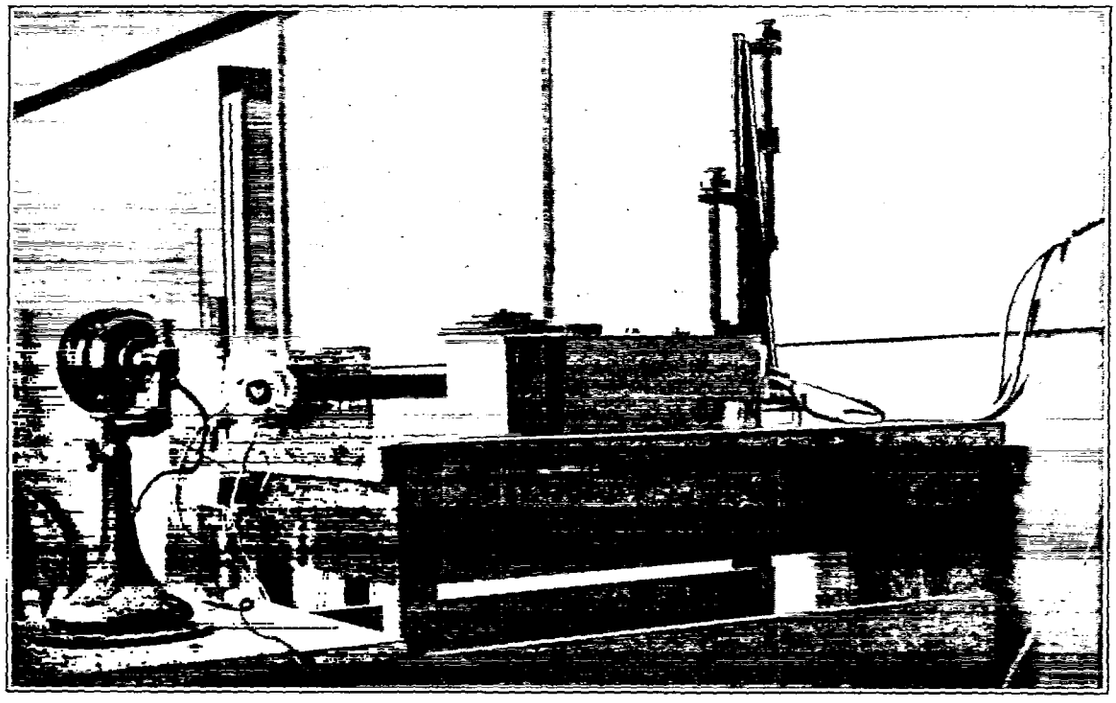

FIG 2.—RECORDING AIR SPEED METER WITH ILLUMINATING AND RECORDING APPARATUS.

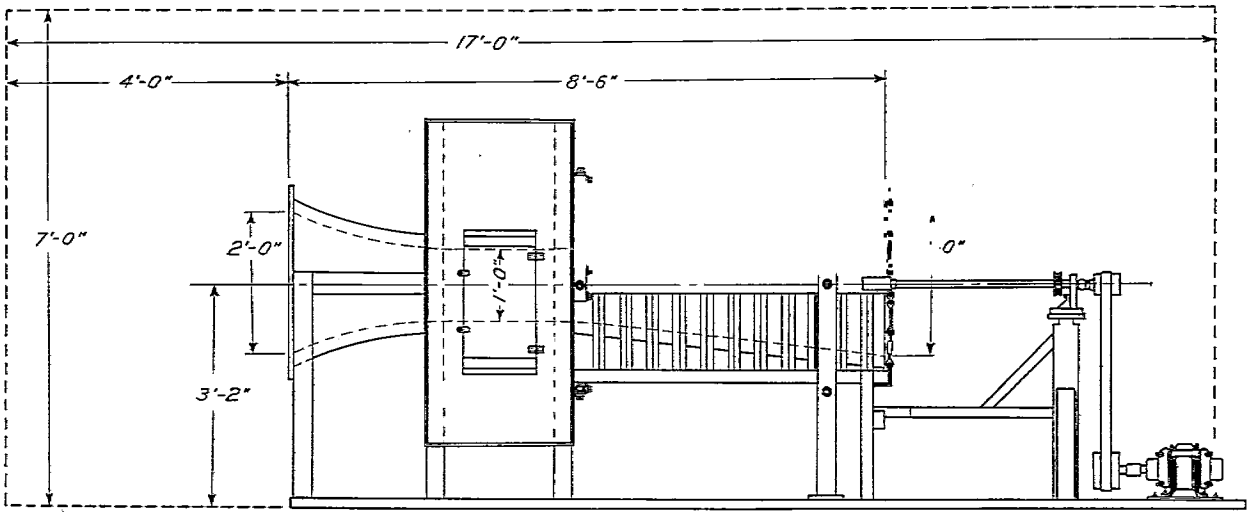

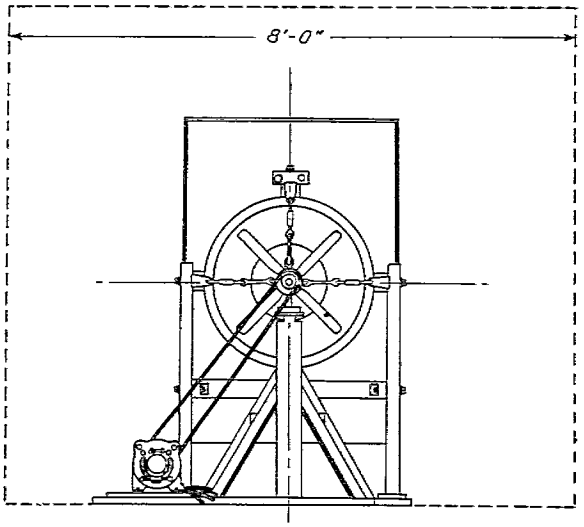

MODEL WIND TUNNEL AND ROOM
Fig. 5

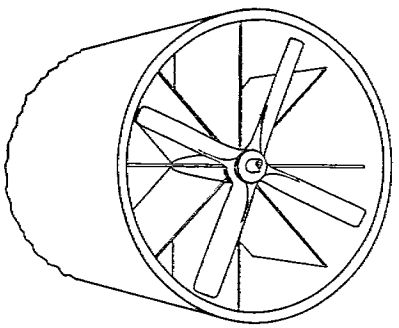

RADIAL VANES IN EXIT CONE
Fig. 6.

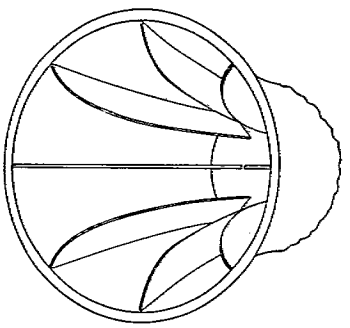

VANES IN ENTRANCE CONE
Fig. 7.

and the variation in direction was $\pm 10°$. The same vanes were then placed in the entrance cone, as shown in Fig. 7, and in this case the speed was decreased by 8 per cent and the variation in direction was $\pm 8°$. With this type of vane in both the exit and entrance cone the speed was decreased by 20 per cent for the same power and the variation in direction was $\pm 8°$. It is evident from these tests that the narrow vanes in either the exit or entrance cones are of little value in any way.

EFFECT OF PLACING SCREEN ACROSS THE TUNNEL.

A section of chicken wire of 25 mm. mesh was placed across the exit cone 45 centimeters ahead of the propeller. The use of the chicken wire decreased the speed by only 3 per cent, so it does not seem that this distribution of screen would be of any great harm to the efficiency of the tunnel and it is of great use in preventing small objects from being drawn into the propeller. A piece of window screen placed at the beginning of the straight portion of the tunnel decreased the speed by 14 per cent and the fluctuation in speed was -12 per cent and was -10 per cent in direction, showing that the screen in no way helps the steadiness of flow for the particular condition of this test. Screens have been used to advantage in other tunnels. With window screen at the mouth of the entrance cone the speed was decreased by only 7 per cent.

EFFECT OF PLACING SPINNERS BEFORE THE PROPELLER.

A spinner 75 mm. in diameter and 450 mm. long was supported by steel wires before the propeller, as shown in Fig. 8. The use of this spinner seemed to have no material effect on the air flow.

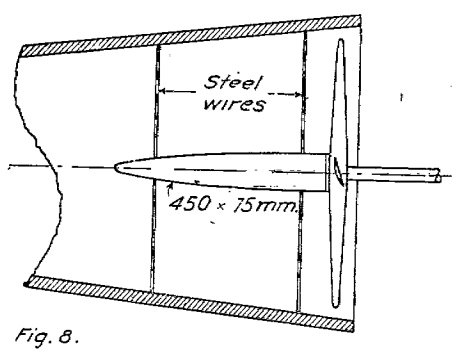

Fig. 8.

SPINNER

THE EFFECT OF EXTENDING THE EXIT CONE BEYOND THE PROPELLER.

By extending the exit cone as shown in Fig. 9, there was no change of the air flow inside the tunnel, but the tangential flow, which had been noticed before with the propeller, was somewhat straightened out, and the air flow was more directly to the rear through the extension of the cone. A cylinder was then attached to the propeller end of the tunnel as shown in Fig. 10, which decreased the air speed about 5 per cent, the air issuing from the tunnel at a considerably higher velocity and in a more compact stream, the borders of the stream still being sharply defined at a distance of 20 feet. As extensions of this kind mean a larger and longer building for the wind tunnel there would certainly be no advantage in using them.

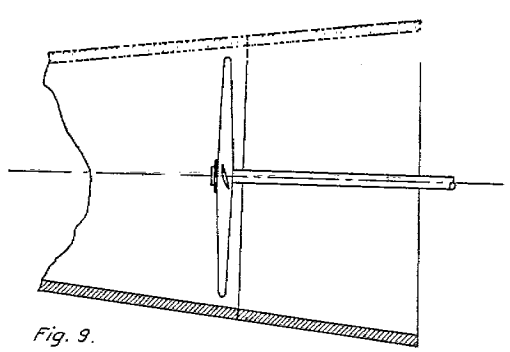

Fig. 9.

CONICAL EXTENSION

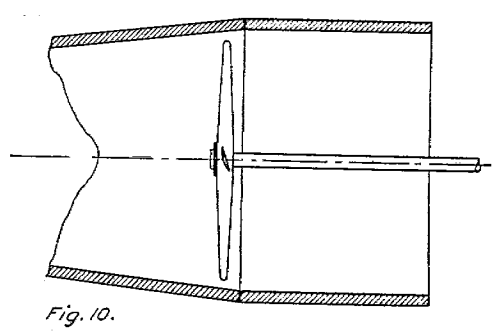

Fig. 10.

CYLINDRICAL EXTENSION

EFFECT OF HONEYCOMBS.

A honeycomb was constructed as shown in Fig. 11 and was placed at the entrance to the straight portion of the tunnel. Owing to the difficulty in obtaining thin-walled metal tubing and to the expense of constructing honeycombs of this type, only this one was tried. It is

quite evident, however, even from this one test that the honeycomb is of the greatest importance in straightening out the flow. The speed is reduced 18 per cent and the energy ratio 45 per cent by this honeycomb, but the maximum speed variation was only ± 2 per cent and the variation in direction was reduced to $\pm 0.5°$. In order to show more clearly the great increase in steadiness of flow, a curve taken with a recording yawmeter is shown for the open tunnel and for the tunnel containing the honeycomb. (Figs. 12 and 13.) It is evident from these how great is the advantage of the honeycomb. As the length diameter ratio in the tubes of this honeycomb are only $2\frac{1}{2}$ it is quite possible that by using longer tubes the flow would be even better and the reduction in speed should not be appreciable. There seems to be no doubt from these tests that the honeycomb is absolutely essential in most wind tunnels.

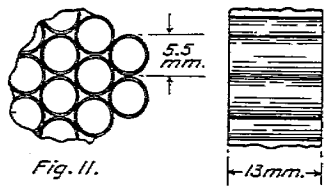

Fig. 11.
SECTION OF HONEYCOMB

EFFECT OF DIFFUSERS.

The first diffuser tried is shown in Fig. 14 and consists essentially of a cubical box of which both sides are perforated with small holes, whose diameter is equal to the thickness of the wall of the box and whose spacing between centers is about twice that of the diameter of the hole. This box was connected rigidly to the rear of the exit cone so that all the air passing through the propeller must escape through these small holes. It was hoped in this way to break up any pulsations which would originate from the propeller. This arrangement decreased the speed of the tunnel by 7 per cent and the maximum variation of speed was ± 6 per cent and the direction variation was $\pm 5°$, so that it would seem that the flow is slightly straightened, but nowhere near as much as with the honeycomb. A second diffuser was tried as shown in Fig. 15, which consists of a latticework across the tunnel room at the experimental chamber consisting of 50 mm. square cells having a 6 mm. wall with a length $2\frac{1}{4}$ times their diameter. This diffuser only reduced the speed of the tunnel by 2 per cent, and the maximum variation was ± 7 per cent, and the variation in direction was $\pm 5°$. Although this diffuser has very little effect on the efficiency of the tunnel, at the same time it does not much improve the steadiness of flow. A third diffuser was constructed as shown in Fig. 16 and placed in the same position as the last. This diffuser decreased the air speed for the same power about 5 per cent, the variation in velocity was ± 5 per cent, and the variation in direction was $\pm 4°$, showing only a slight

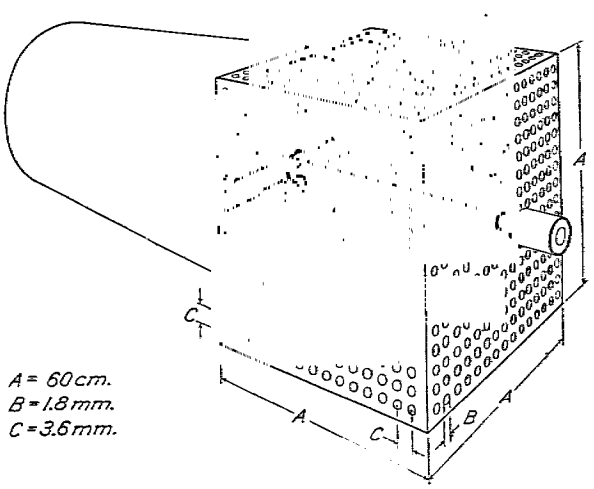

Fig. 14. CUBICAL DIFFUSER

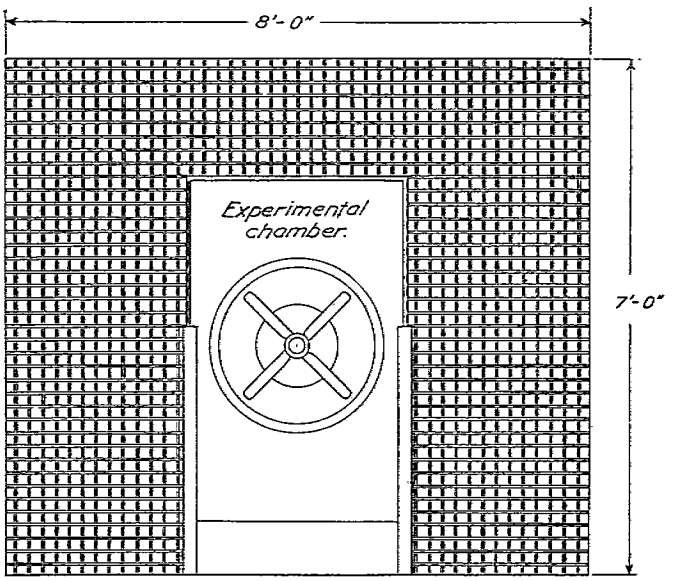

Fig. 15 DIFFUSER.

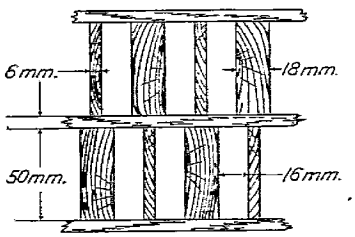

SECTION OF DIFFUSER.
Fig. 16.

improvement over the open room. It seems strange that these diffusers did not improve the air flow more, as the British have found that diffusers greatly improve the flow in their tunnels. The results of these tests would not, however, justify the use of a diffuser in a full-sized tunnel because of the rather large expense of construction of such a piece of apparatus.

EFFECT OF PERFORATING THE STRAIGHT PORTION OF THE TUNNEL.

In order to determine the effect on air flow of opening the doors in the cylindrical portion of the tunnel and in using small holes for the introduction of apparatus, various tests were made on the model in order to see how this would effect the efficiency and steadiness of flow. Also the velocity of the air in the experimental chamber was determined by a small anemometer. A slot was first cut in the cylinder parallel to its axis and one-fifteenth of the diameter wide, running the whole length of the experimental chamber. The air flow extended out about the width of the slot from the walls of the cylinder, and beyond this there was no flow in the chamber and the efficiency of the tunnel was not appreciably affected. This slot was then increased in width to one-sixth of the diameter of the tunnel, thus decreasing the efficiency of the tunnel very slightly, and the flow of air extended about one-sixth of the tunnel diameter into the experimental chamber nearest the exit cone, but this air flow was less marked as the distance to the entrance cone was decreased. When the width of the slot was increased to three-eighths of the tunnel diameter the efficiency was decreased about 15 per cent and the air flow extended two-thirds of the width of the slot into the experimental chamber, near the exit cone, but there was no flow elsewhere in the experimental chamber.

TESTS IN FULL-SIZED TUNNEL.

A few tests were made in the large tunnel in order to afford a comparison with the model. In Fig. 17 is shown the slip in the large tunnel. In comparing this with a similar condition in the model tunnel (Fig. 4) it is seen that for the same air speed the revolutions per minute is

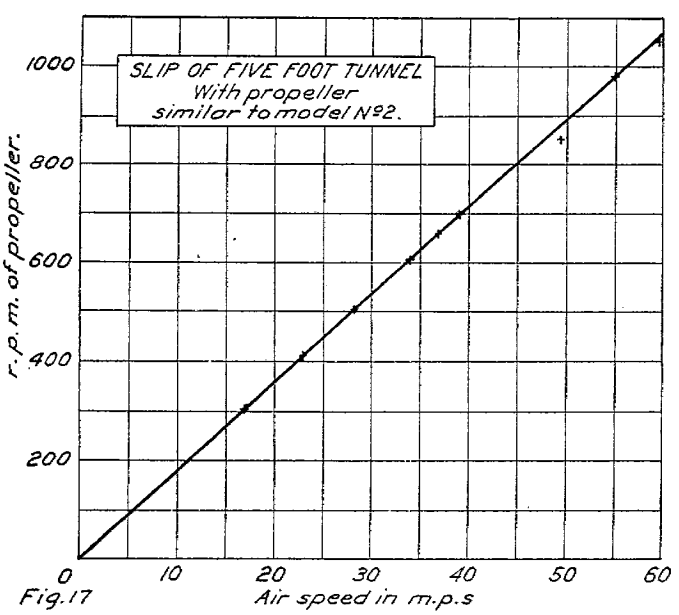

Fig. 17

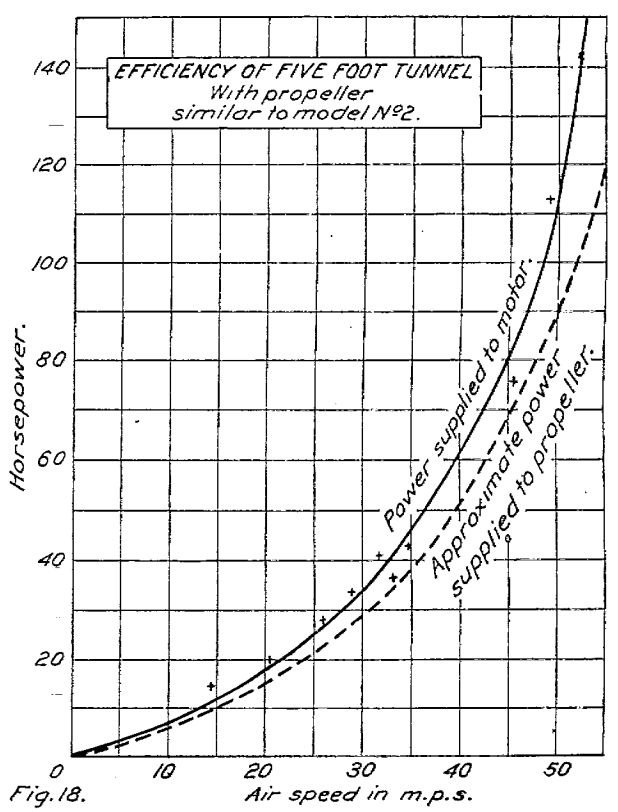

Fig. 18.

5.7 times as large in the small tunnel as in the large one. Theoretically, the ratio should be exactly 5, but the fact that the model test was run in a proportionately larger room would account for this difference.

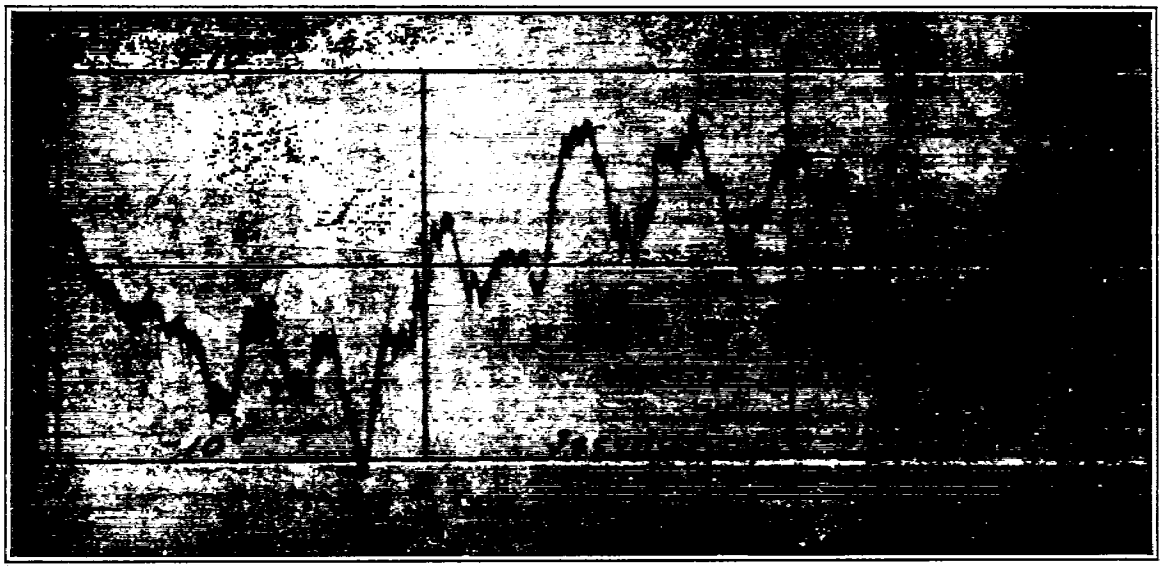

FIG. 12.—VARIATION IN DIRECTION IN THE MODEL TUNNEL WITH NO HONEYCOMB.

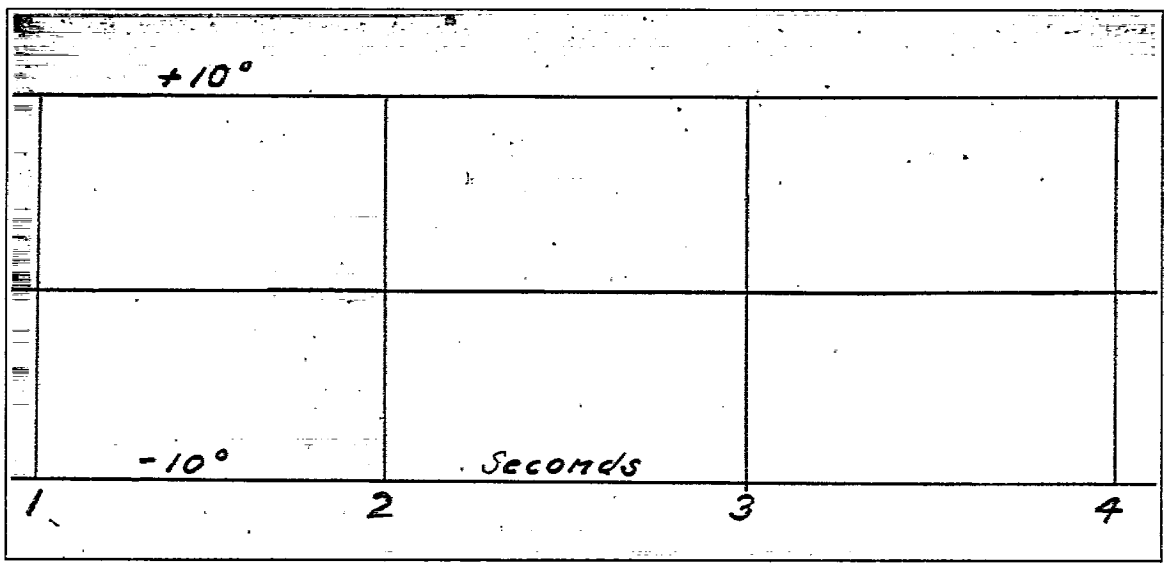

FIG. 13.—VARIATION IN DIRECTION IN THE MODEL TUNNEL WITH A HONEYCOMB.

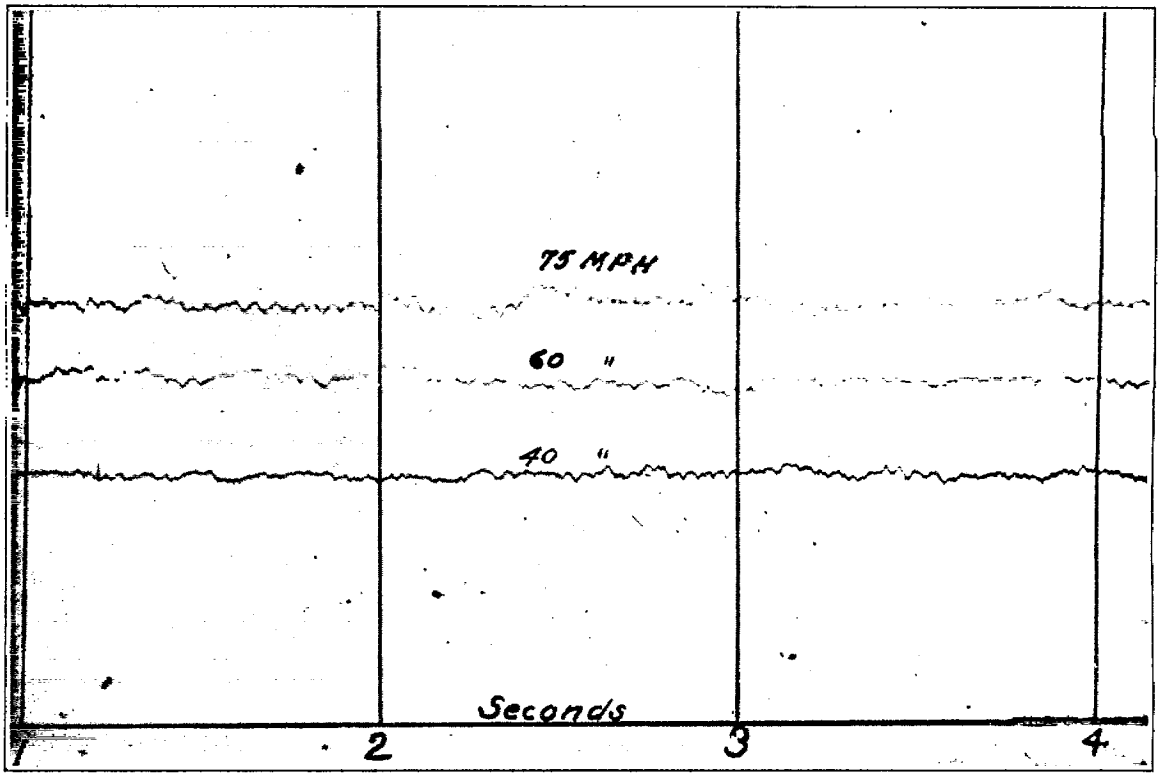

FIG. 19.—VELOCITY VARIATIONS IN LARGE TUNNEL WHEN THE DRIVING MOTOR WAS CONNECTED TO A 25 K. W. GASOLINE GENERATING SET.

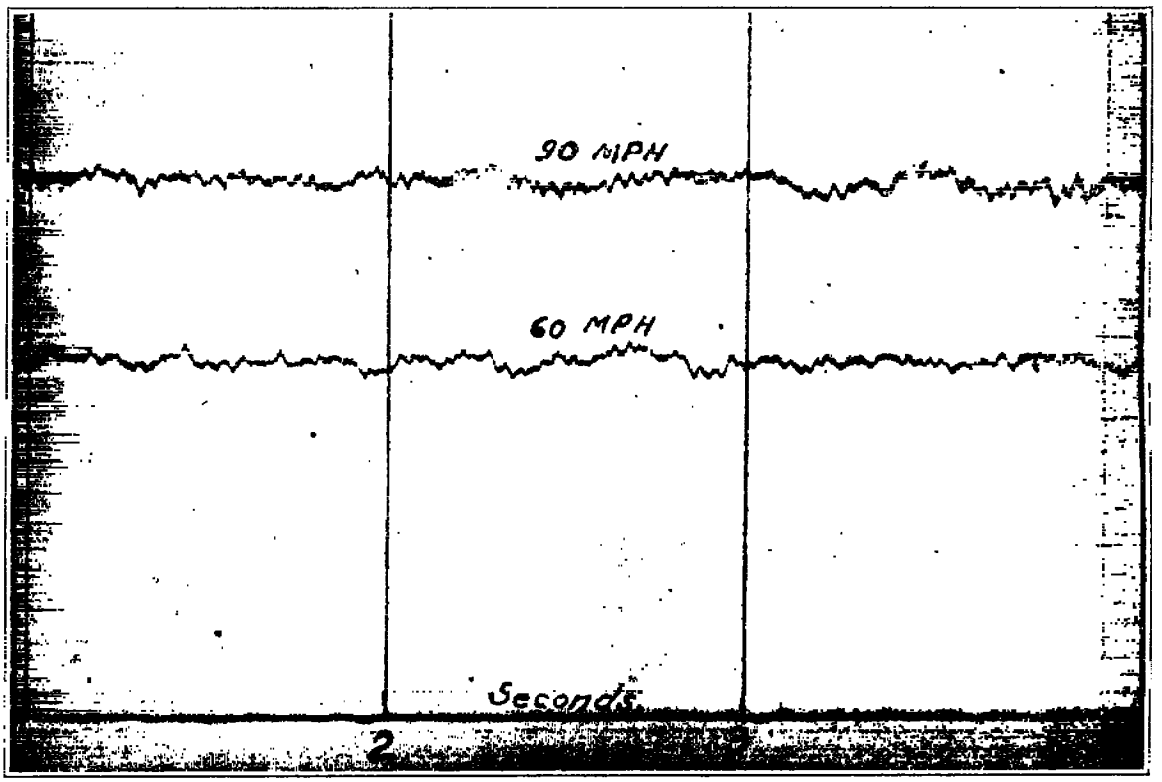

FIG. 20.—VELOCITY VARIATIONS IN LARGE TUNNEL WITH DRIVING MOTOR CONNECTED TO A 300 K. W. LIBERTY GENERATING SET.

As the exact efficiency of the driving motor in the large tunnel is unknown, a curve of horsepower supplied to the motor is plotted against air speed, but to give some idea of the power supplied to the propeller a dotted curve is drawn from the estimated motor efficiency. (Fig. 18.)

In comparing this curve with the one obtained in the model, it is seen that the full-sized tunnel is slightly more efficient, so that results may be taken from models to safely predict the performance of the full-sized tunnels. It is also interesting to notice that the power does not increase as rapidly as the cube of the speed but more nearly as $V^{2.5}$, although, as the efficiency of the motor is not exactly known, the value of the exponent can not be determined very closely.

Records were taken in the full-sized tunnel of variations in velocity, and these are reproduced in Figs. 19 and 20. In the first figure the wind-tunnel motor was connected to a gasoline-driven generator of 25 kilowatts and records taken at several speeds. In Fig. 20 the motor was connected to a 300-kilowatt generator driven by a Liberty motor. The most important characteristic of these records is that the magnitudes of the fluctuations do not increase as rapidly as the air speed, so that at the higher speeds, quite contrary to expectations, the velocity is relatively steadier. The maximum variation in air speed at 90 miles per hour was about $\pm$ 1.5 per cent, whereas in the model it was about $\pm$ 2 per cent, so that it would seem that the steadiness was about the same in any size of tunnel.

Yawmeter records were also taken in the large tunnel, but were not reproduced, as they show practically a straight line, indicating that the honeycomb was satisfactorily straightening out the flow.

NATURAL PERIODS OF TUNNEL.

A wind tunnel acts as an open organ pipe and its natural period will be given by:

$$P=\frac{4l}{V}$$

where l is the length of the tunnel in feet,
and V is the velocity of sound, or 1,040 ft./sec.

The model tunnel would then have a period of 0.03 seconds and the large tunnel a period of 0.15 seconds. Vibrations of this nature are very evident audibly in the tunnels at certain speeds, but do not seem to be present on the records, as the pitot tube is very nearly at the node of the vibration. The honeycomb has a considerable influence in damping these vibrations, which are more of a curiosity than of any practical interest.

AUTOMATIC REGULATORS.

As it is not practical to supply a constant voltage to a wind tunnel, although some tests have been made with storage batteries where an extremely constant speed was required, it is either necessary to keep the voltage constant as nearly as possible by hand regulations or use some type of automatic regulator. In small tunnels it is quite easy to regulate the wind by hand, but in larger tunnels the inertia of the moving parts is so great that there is considerable amount of lag between the change in regulation and the response of the air speed, making hand regulation very difficult. A very complicated regulator has been constructed at Göttingen (N. A. C. A. File No. 5346–10) and seems to hold the velocity quite constant. There are also numerous electrical devices for maintaining a constant motor speed, and some of these regulators will hold the speed within 0.1 per cent. It seems probable, however, that even if the revolutions per minute of the propeller is constant that there will still be fluctuations in the air speed, so that a successful regulator must be actuated by the air flow. There is a great deal of work to be done on such regulators, and the N. A. C. A. intends to carry on work of this kind in the near future.

CONCLUSIONS.

The qualities that should be aimed at in wind-tunnel design in order of their importance are:

1. Constant direction of flow.
2. Constant velocity of flow.
3. Uniform velocity across section.
4. Efficiency.
5. Ease of working around tunnels.
6. Simplicity and cheapness of construction.

A good many of these qualities are contradictory, and the best compromise must be made between them and the type of work that is to be undertaken. For example, a tunnel for testing instruments should have a high efficiency, but need not have a very steady flow. On the other hand, a tunnel for testing wings should have its efficiency somewhat lowered in order to obtain a steady flow. It is quite possible to so arrange the honeycomb and diffusers that they may be removed when it is desired to obtain the highest speed. It would also be of value to make it possible to open the ends of the building, as there are many days when the wind would have little effect on the steadiness, and the efficiency would apparently thus be considerably increased. This arrangement would also make it possible to cool off the air in the building in a very short time, an advantage that would be greatly appreciated in hot weather.

This work seems to show conclusively that a straight exit cone is more efficient than a curved one, and it is certainly cheaper to construct. Diffusers affect the air flow very little, and they do not seem to warrant the expense of construction. Honeycombs, however, are of the greatest value and should be placed in every tunnel.