NATIONAL ADVISORY COMMITTEE FOR AERONAUTICS. —

Tech. Memo. No. 37.

SHAPE AND STRENGTH OF SEAPLANE UNDER-STRUCTURES WITH SPECIAL REGARD TO SEAWORTHINESS.

By

Victor Lewe.

2.8
5.3.1

Translated from
"Zeitschrift für Flugtechnik und Motorluftschiffahrt,"
May 15, 1920.

August, 1921.

FILE COPY
To be returned to
the files of the Langley
Memorial Aeronautical
Laboratory

NASA Technical Library
3 1176 01439 9969

SHAPE AND STRENGTH OF SEAPLANE UNDER-STRUCTURES WITH SPECIAL REGARD TO SEAWORTHINESS.

By

Victor Lewe.

PART II. STRENGTH.

Introductory Remarks.

This part of the paper treats:

I. Requirements of the landing gear, as ascertained by calculations and experiments:

(a) Study of moving pictures.

(b) Readings of accelerometers.

(c) Verification of calculations on successful designs, investigation of accident reports.

(d) Strength tests of floats.

II. Proposals for calculation instruction.

III. Development forms.

(a) Bracing.

(b) Floats and hulls.

The landing gear of seaplanes is, contrary to the underbracing of airplanes as a rule, connected with the cell structure and takes part of the air load on the interplane structure. In the majority of cases, however, the landing gear is most heavily taxed during the take-off, alighting, rolling and taxi-ing on the water. According to the type or purpose of the seaplane it requires full or limited seaworthiness,

* Zeitschrift für Flugtechnik und Motorluftschiffahrt," May 15, 1920.

The first class must be able to withstand seaway 3 to 4 with a wind velocity of 9 to 12 meters per second, while the second class must be able to withstand seaway 2 to 3 with corresponding wind velocities of 6 to 9 m. per second. As is well known by every participant in sea tests and is here illustrated by moving pictures, the floats and hulls are hit, while starting and after alighting, by waves on both the bow and stern and also, during the rolling and taxi-ing, by lateral waves.

I. Experiments and Calculations for the Purpose of Determining the Landing Gear Requirements upon the Water.

Moving pictures furnish not only the previously mentioned data, but, under certain conditions, they may also give both the magnitude and direction of the forces acting. If, for example, the optical axis of the motion picture camera is stationary and the seaplane lands perpendicularly to this axis and within the field of view, then the speed at each instant during the alighting may be obtained from the positions of the seaplane. The pictures are projected very slowly by a special small hand-operated projection machine onto a white paper surface and the successive positions of the seaplane indicated by means of a point (for example, the bow of the float) and a straight line, such as the deck of the float. Then, from the distance between two successive positions of the seaplane, d s, and from the time between two exposures, d t, we can find the velocity,

$$V = \frac{ds}{dt}$$

In like manner we obtain from the increase in velocity the acceleration p of a point (for example, the bow of the float), given for corresponding angles by the relation between the marks on the projection surface or the angular acceleration of some straight line, like the float deck:

$$p = \frac{dv}{dt}$$

Knowing the weight G, the mass $M = \frac{G}{g}$ and the moment of inertia of the seaplane, we can find, in accordance with the fundamental law of dynamics,

$$P = M \frac{dv}{dt},$$

the desired force P exerted by the water upon the float. A more detailed description of the tests at Warnemünde, as well as of the experiments with accelerometers, cannot be given here for lack of space.

The recalculations of types, approved or strengthened in sea trials, constitute a means of determining formulas to serve as the basis of construction. The justification of such a method lies in the fact that it concerns the under-structure, whose heaviest loaded members in the sea tests were at first found too weak and were gradually strengthened up to the dimensions found necessary in practice. Furthermore, the under-structure must always be of a sufficiently simple construction to allow of an objectionless check calculation. The line of action and point of application of the force must be evident from inspection and from the moving pictures, so that by these methods only the force of

the waves, or the landing shock, remains to be determined. It can be assumed that the mean effect of a wave on the bow extends over the forward third of the float, because this part is curved similar to an oncoming wave (conchoidal) and therefore comes into contact with the wave all at once. These forces act approximately normal to the curved bottom surface and, since the aviators do not complain about (diving) moments, we may assume the direction of this force to be such that it passes through the center of gravity. The landing shock on the stern will for similar reasons be taken as acting on the rear third. The form of the stern and the setting up of a strong forward diving moment justify the assumption that this force acts in a perpendicular direction (Fig.1). If the total forward shock on the bow and the landing shock on the stern are separately set equal to the weight of the seaplane and the factor of safety is calculated for each member of the landing gear, the smallest factors will indicate the weakest members. This holds especially true for the struts running direct from the float to the fuselage, because these connect the place of shock with the chief weight which lies in the fuselage and permit only a slight variation in the total load carried by the individual members. It is otherwise with the outside struts from the floats to the wings, where a small factor of safety is no cause for worry, since the impact, on account of the greater elasticity resulting from the larger number and lighter construction of these struts, does not produce so great stresses. Most of the complaints from the front were in regard to failure of the cen-

tral struts. In considering the calculated factors of safety, it should be remembered that the reason for the great variations in these figures is that some struts and cables as a result of the air loading (cases A to C), are subjected to considerably greater stresses than in the sea tests and are therefore more strongly built; hence the high factors of safety. In the following tables, the landing load on the float is designated by F with the subscripts v, h, and s, for forward, rear, and side.

For the check calculation of the chiefly lateral stresses in rolling and taxi-ing, we have adopted, according to Fig. 2, a lateral force perpendicular to, and uniformly distributed over, the side of the float. This force equals the weight of the seaplane and the equivalent lift and is designated by F_s.

For check calculations, there were chosen from different firms, two seaplanes each from Class I (fully seaworthy) and Class II (partially seaworthy). Seaplane A was for a long time a standard type and was accepted as absolutely seaworthy (Fig.3). Seaplane B, of similar construction, was built by another firm. Seaplanes C (Fig.4) and D (Fig.5) were the product of a third firm, chiefly interested in battle seaplanes, and were of necessity less seaworthy.

(Table for Seaplane A)

Strut	Length	Steel tube	F_v	F_h	F_s
1	126	35x1	4.96	7.77	8.60
2	119	35x1	46-1	11.55	2.10
3	152	38x2	5.39	8.9	3.23
4	107	35x1	15.0	10.5	3.14
5	143	38x1.5	9.22	4.33	1.68
6	180	35x1.5	5.74	4.8	10.90

Table for Seaplane B.

Strut	Length	Steel tube	F_v	F_h	F_s
1	172	50x1	5.9	--	--
2	172	50x1	--	--	2.97
3	183	50x1.5	5.52	--	2.13
4	135	50x1	--	--	--
5	119	50x1	--	--	--
6	119	50x1	--	--	4.8
7	133	50x1.5	--	3.96	2.22
8	173	40x1	--	--	--
10	168	50x1	--	--	3.7
12	167	50x1.5	--	3.20	--

Table for Seaplane C.

Strut	Length	Steel tube	F_v	F_h	F_s
1	179	45x1.5	4.53	--	6.75
2	179	35x1.5	--	2.77	--
3	202	55x2.5	3.80	14.00	--
4	165	50x1.5	--	--	5.80
7	164	55x2.5	--	3.06	10.70
8	211	30x1.0	--	--	4.00

Table for Seaplane D.

Strut	Length	Steel tube	F_v	F_h	F_s
1	162	50x2	4.45	--	7.80
2	118	30x1	--	--	1.06
5	162	50x2	--	2.75	8.20
6	118	30x1	--	--	1.01

These check calculations apply only to the bracing, a check calculation of the floats (which likewise during the war, when their form had already become quite compact, were constantly undergoing changes in strength of construction and material) having been wrecked on the complicated construction of the same and the want of systematic strength tests. A few strength tests have, however, been carried out both on a wooden float and a corresponding duralumin float. This test is made the subject of a separate article in this magazine. The results showed a bow load of 3.5 W for the wood construction and 4 W for the duralumin construction. The superposing on the float joints imitated the actual practice unfavorably, so that we may calculate on an increase of these figures to 4 and 7.

II. Proposals for Calculation Instructions.

The instructions for calculations, which were issued by the Army and Navy during the war, are based on a series of tests, extending over a number of years, for determining the action of the air forces on airplane cells. The magnitude of the air forces is given throughout in terms of the weight of the airplane. On the one hand, it might appear presumptuous to make the few prescribed experiments the basis of instructions for calculating the landing gear of seaplanes. On the other hand, it may be replied that, in contrast with the cell, the nature of the forces acting on the under-structure is quite well known from the shock surfaces of the float and the direction of the waves and only the magnitude of the shocks remains to be determined. While in the

load tests of the cell structure two parts must be determined at a time, with the under-structure only the magnitude of the shock, that is, one part at a time, must be occasionally determined. Furthermore, a series of tested landing gears has been produced, from which, as has here been done, the magnitude of the water shocks may be obtained by recalculation.

(a) Float bottoms.

Float bottoms, carrying the water forces directly, are to be calculated for a load, uniformly distributed over the forward third of the float length, of 12 W in Class I (fully seaworthy), and of 8 W in Class II (of limited seaworthiness). For the stern, the corresponding figures are 9 W for Class I and 6 W for Class II. The middle part is supposed to form a transition between the strength of bow and stern.

(b) Sides of Float.

A load of 3 W, uniformly distributed over the entire side, is to be calculated for Class I, and of 2 W for Class II.

(c) Construction of Float Members.

There are three kinds of stresses to be distinguished: bow force F_v, stern force F_H, and side force F_s. The line of action of each of these forces is given in Fig. 1. The magnitude of these forces to be used in calculation are:

1. F_v

Class I - - - - - - - 6 W
Class II - - - - - - - 4.5 W

2. F_H

Class I - - - - - - - 4 W
Class II - - - - - - - 3 W

3. F_s

Class I - - - - - - - 2 W
Class II - - - - - - - 1.5 W

besides the lift W (the simple weight of the seaplane).

The load factors of 1 and 2 apply to both floats taken together, but the factors of 3 are for a single float.

The bow and stern shock factors apply to a landing speed of 80 km/hr. (50 m.p.h.). For any other speed V, the factor must be changed in the ratio $\frac{V^2}{80^2}$, which cannot exceed 3/4. The beneficial effect of the dead rise, or Vee, is also to be taken into consideration, when determining the magnitude of the stern shock, by multiplication with $\sin \beta/2$, since the factors 4 W and 3 W are for keelless flat bottoms ($\beta = 180^\circ$).

III. Development Forms.

A seaplane landing gear may be divided into two parts: floats and float bracing. The construction of floats has been taken up in the previously mentioned essay, with one example in wooden construction and a second example in duralumin.

Representations of float bracing systems are given in Figs. 7 to 12. Types of float connections are:

(a) Pin joints in four points.

(b) Rigid joints in two points.

Figs. 7, 8, 9, and 12, are examples of (a) and Figs. 10 and 11 of (b). The rigid connection is obtained by means of a sheet steel fitting similar to Fig. 6. The most heavily loaded strut which runs aft, is rigidly attached to the fitting, the remaining

wing, diagonal and horizontal struts or cables are pinned. The fitting is screwed down to a float bulkhead or bracing which lies in the center, or, even better, somewhat outside the middle of the float deck.

The bracing system of Fig. 7 is adapted from airplanes and has not stood the test of practice, on account of its low stability. The bracing system of Fig. 8 is formed from that of Fig. 7 by the use of stay wires for the wings. Fig. 9 is similar to Fig. 8, except that struts are used instead of cables. One disadvantage of 8, as compared with 9, is the greater elongation of the cables and the resulting possibility of a flutter of the wings. On the other hand, the extraordinary strength of the bracing and the weight of the wing struts in 9 is felt to be a disadvantage. In Fig. 12 the wing struts lead only to the body fittings because the wings are self-supporting.

The rigid float connection is used chiefly on monoplanes. Biplanes and also a few monoplanes are connected to the float in four flexible joints. The customary construction is shown in Figs. 10 and 11.

The large G and R types, as a result of the distribution of the weights of the several engines, have a yet more complicated system of bracing. Instead of a single heavy weight concentrated in the fuselage there are three separate weights to be cared for, namely, the fuselage and the two engine nacelles. All three of these weights must be carried by the two floats or a single hull. Flexible connections are here the rule, just as rigid connections

are characteristic of the lightest seaplanes only.

The foregoing explanations lead the interest of the constructor and experimenter into a region in which little has yet been done. We find no previous publications which treat of the stresses in a seaplane on water, its second living element, or which attempt to systematize the landing gear. This paper has perhaps shown that the float bracing of a seaplane is as important as the wing trussing and therefore has claim to the same conscientious calculation and development, in spite of its previous neglect. Compared with the landing gear of an airplane, the seaplane landing gear has a far greater significance. The under-structure must combine the properties of a hydroplane with those of a ship, the stresses being more severe and manifold than with the land gear. Nevertheless, if they are not too heavy, seaplanes will behave equally well in the air. Seaplanes are heavier than the same kind of airplanes and adaptations of the latter are not practicable without strengthening the under-structure.

(Translated from "Zeitschrift für Flugtechnik und Motorluftschiffahrt," by National Advisory Committee for Aeronautics.)

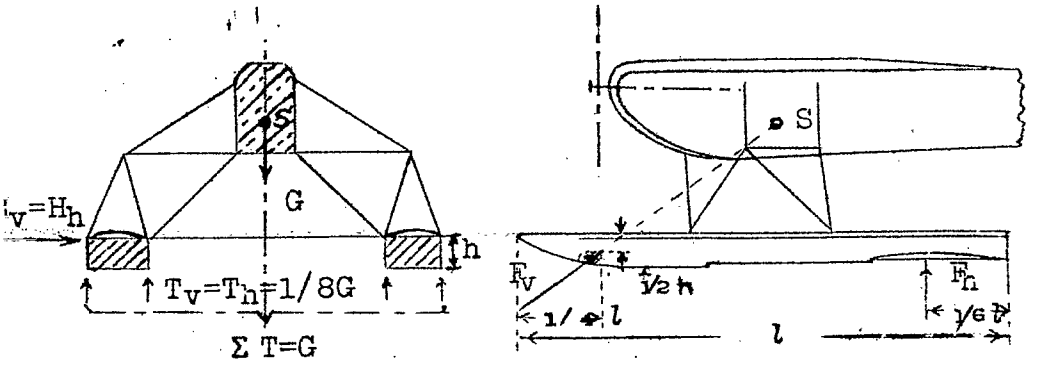

Kl.I: H=26
Kl.II: H=1.5G

Kl.I: F_v=6G
Kl.II: F_v=4.5G

Kl.I: F_h=4G
Kl.II: F_h=3G

Fig. 1

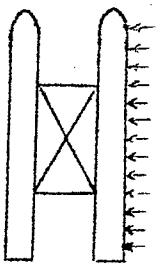

Fig. 2

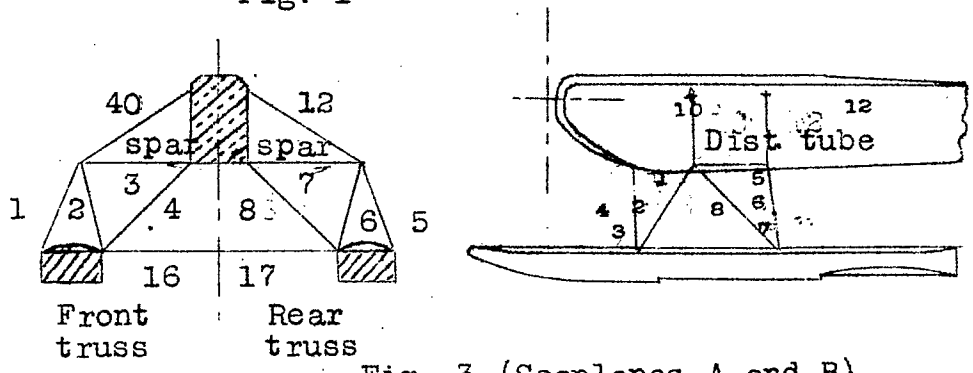

Fig. 3 (Seaplanes A and B).

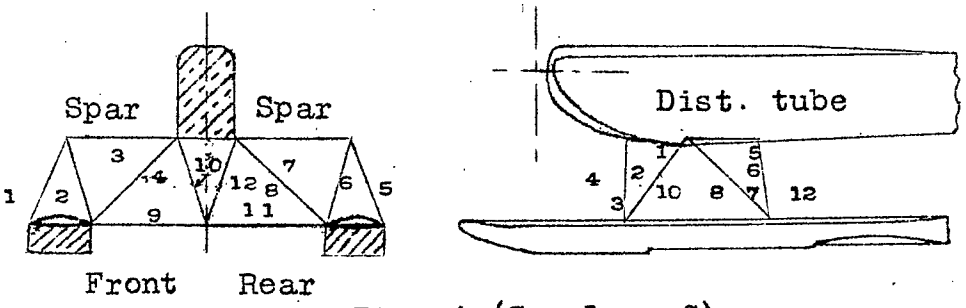

Fig. 4 (Seaplane C).

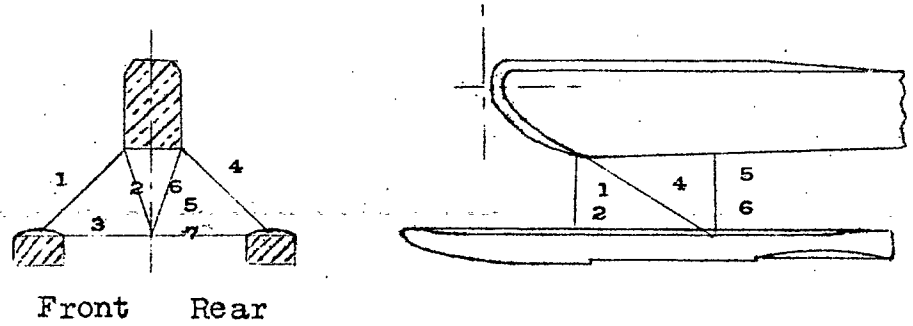

Fig. 5 (Seaplane D).

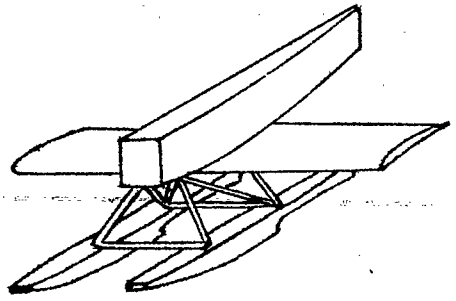

Fig. 7.

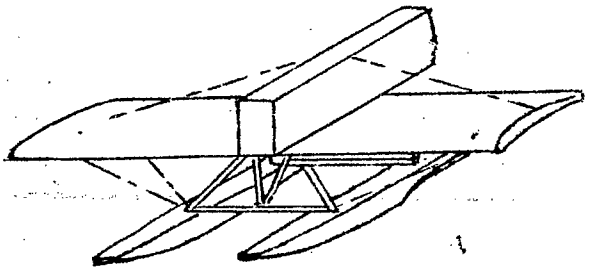

Fig. 8

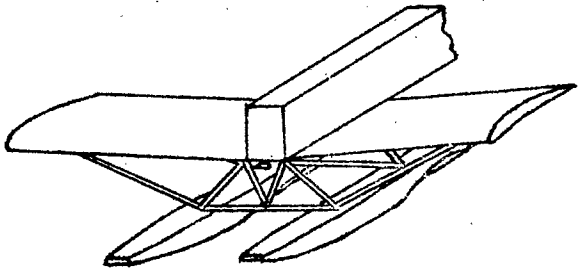

Fig. 9.

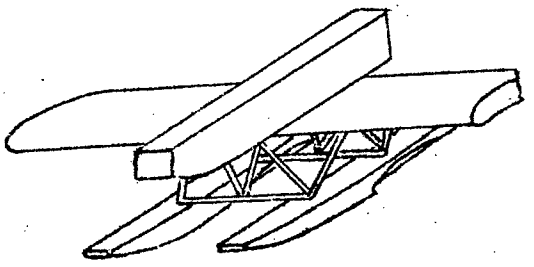

Fig. 12.

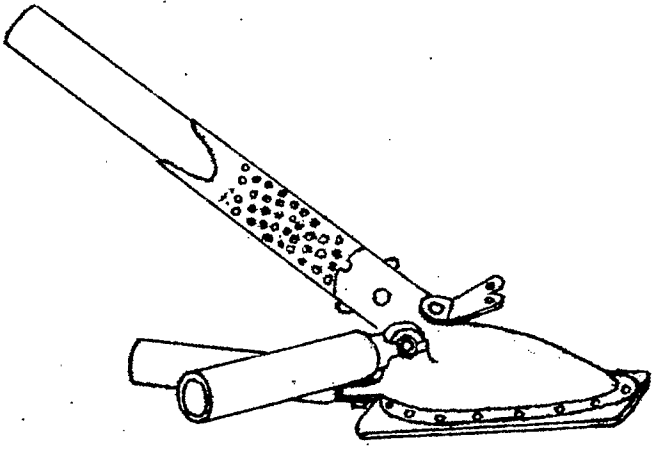

Fig. 6.

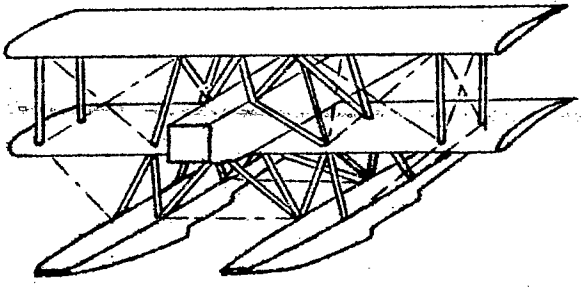

Fig. 10.

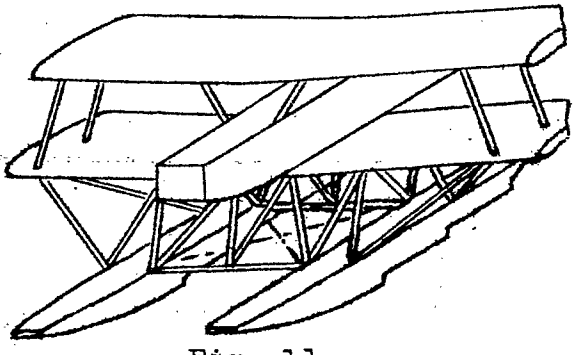

Fig. 11.