TECHNICAL NOTES.

NATIONAL ADVISORY COMMITTEE FOR AERONAUTICS.

No. 65.

LANGLEY FIELD WIND TUNNEL APPARATUS.

By

D. L. Bacon,
Langley Memorial Aeronautical Laboratory,
National Advisory Committee for Aeronautics,
Langley Field, Va.

October, 1921.

NATIONAL ADVISORY COMMITTEE FOR AERONAUTICS.

TECHNICAL NOTE NO. 65.

LANGLEY FIELD WIND TUNNEL APPARATUS.

By
D. L. Bacon,
Langley Memorial Aeronautical Laboratory.

A Wire Suspension Aerodynamic Balance Especially Designed for Routine Tests of Aerofoils at High Air Speeds.

The difficulties experienced in properly holding thin tipped or tapered aerofoils while testing on an N.P.L. type aerodynamic balance even at low air speeds, and the impossibility of holding even solid metal models, at the high speeds attainable with the National Advisory Committee's wind tunnel, necessitated the design of a balance which would hold model aerofoils of any thickness and at speeds up to 150 m.p.h.

In addition to mechanical strength and rigidity it was highly desirable that the balance readings should require a minimum amount of correction and mathematical manipulation in order to obtain the lift and drag coefficients and the center of pressure.

The general scheme of the balance herein described is similar to that which has for some years been in use at the University of Göttingen, the main difference lying in the addition of a device for reading the center of pressure directly, without the necessity of any calculation whatsoever.

A schematic diagram of the balance is shown in Fig. 1. The wing A is hung upside down from the direct reading balance B by means of four wires attached to a frame which will be described later. These four wires hang perpendicular to the air stream and thus carry the lift force on the model. In like manner wires m and n lying in a horizontal plane throught the axis of the tunnel carry the drag force to the common point O where they connect with the vertical wire d and the two wires x and y lying in a transverse plane at 45° to the vertical and fastened at their lower ends to the tunnel floor. It is obvious from a resolution of the forces through o that the vertical force in d is equal to the component of M and N along the axis of the tunnel and is measured by a simple weighing beam fastened to a bench directly above the center of the tunnel.

The counterweight W is used for two purposes, viz, to prevent the wing from rising at angles of negative lift, and to maintain an initial tension in the complete wire system. It is normally carried slightly downstream by a pulley in order to produce initial drag but is allowed to hang directly downward when the center of pressure is being measured.

The details of the mechanism used for adjusting the angle of attack and for locating the center of pressure are shown in Fig. 2. The four lift wires hang from the aluminum frame ABCD which is hinged at C and D to the horizontal frame EFGH relative to which it may be angularly adjusted by a geared sector and a pinion to which is fastened an index plate at E, fitted

with a spring dowel which automatically locks the frame ABCD at the exact angle desired. As the lift wires, the wing chord and this frame form a vertical parallelogram it will be seen that the chord line will always remain parallel to the frame ABCD and that the angle between AD and EH may be taken as the angle of attack. A slight error is introduced by the uneven stretching of the lift wires when loaded, but this is usually negligible.

The method used to obtain a direct reading of the center of pressure is best explained by reference to Fig. 3. The center of pressure, defined as the intersection of the resultant R and the wing chord is shown at P and the resolved forces by L and D respectively. The line of action of L intersects an imaginary wing chord at P^1 and divides it in the same ratio as the actual wing chord. By finding a point such as P^{11} where the frame EFGH may be supported in equilibrium by a pair of sliding knife edges the center of pressure of the wing may be read directly from a suitable scale. The drag force D acting at a distance QA from the line of action of the drag wire introduces an error in this reading of

$$\frac{D}{L} \tan \alpha \times \frac{AP}{AB} .$$

which for a normal wing reaches a maximum value of about 1% of the chord at an angle of attack of 16° and which may therefore be neglected. In order to eliminate the effect of the centers of gravity of the various masses a series of counterweights

(Fig. 2) has been provided which bring these centers of gravity to lie on the axis CD, No. 1 being connected with frame ABCD and No. 2 with EFGH. Beams No. 3-3 rest on knife edges bearing on the balance platform and support the entire moving mass in a state of neutral equilibrium when no air is passing through the tunnel. The knife edges K K slide on ways and while testing can be lifted by a cam against EFGH at any position along the imaginary chord for a trial balance. The knife edges are then moved forward or backward until equilibrium is reached. The center of pressure thus obtained is read directly in percent of the chord with an accuracy of about 1 percent except in the neighborhood of zero lift, when it becomes indeterminate.

The model wing is fastened by countersunk nuts to studs projecting from two steel skids attached to the wire system, as shown in Fig. 4. The zero angle is set by means of a spirit-level, and the turn-buckles in the wires.

This balance has given satisfaction in service, holding all types of wings at speeds up to 120 miles per hour, and proving convenient and labor saving during routine tests. The large drag correction for the wires prevents great accuracy of drag measurements with small models but the relative magnitude of this correction decreases as the size of the model increases.

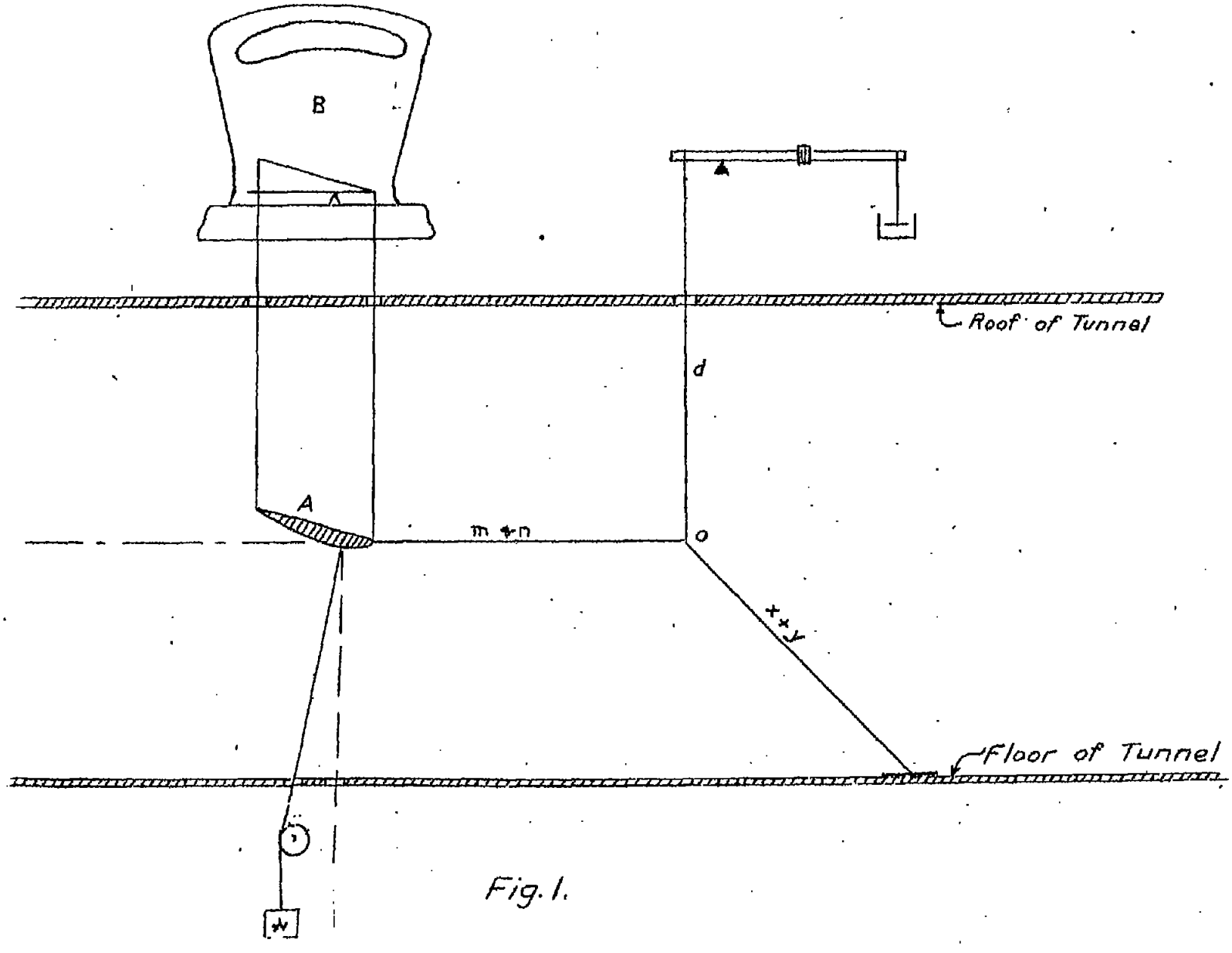

Fig. 1.

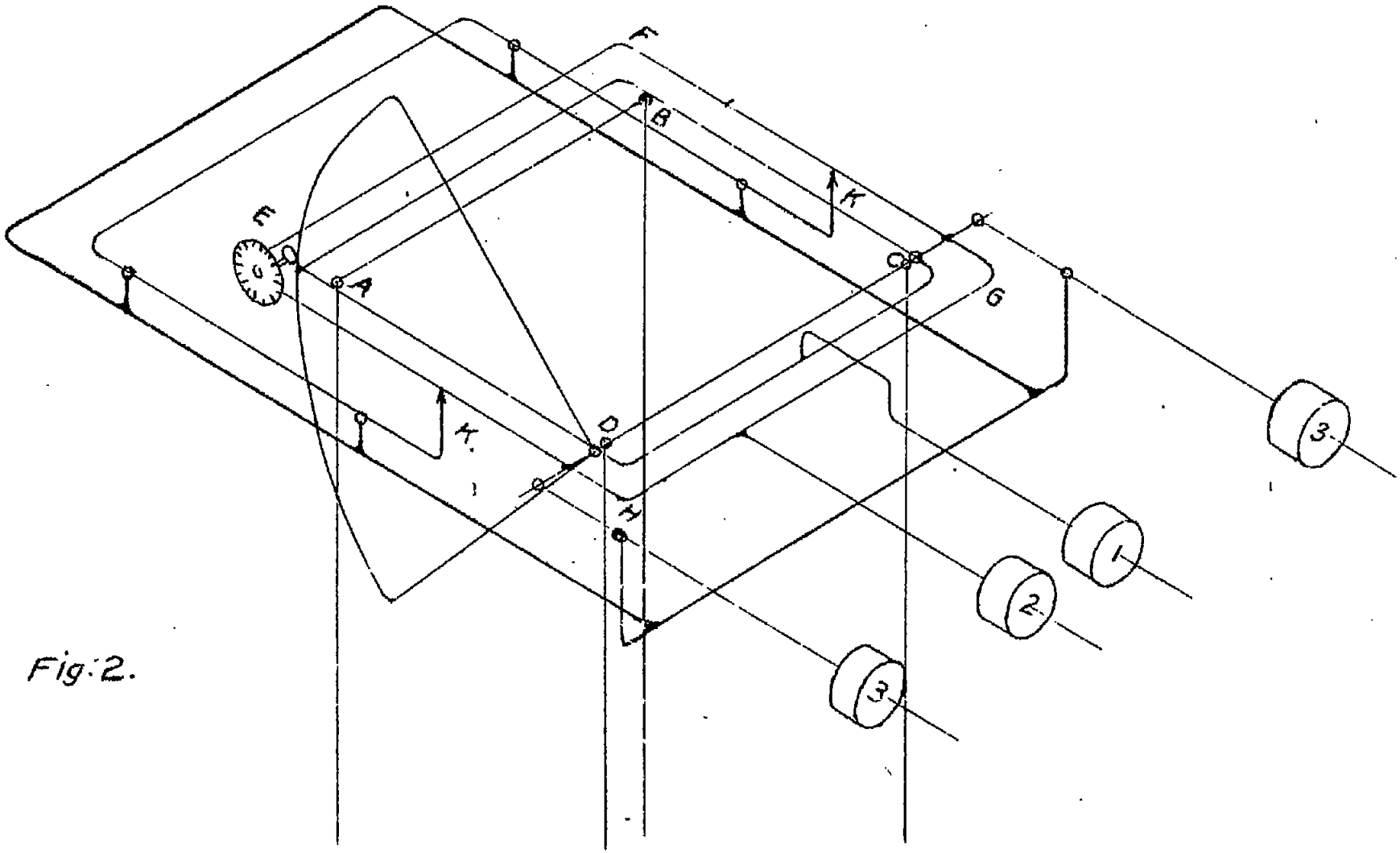

Fig. 2.

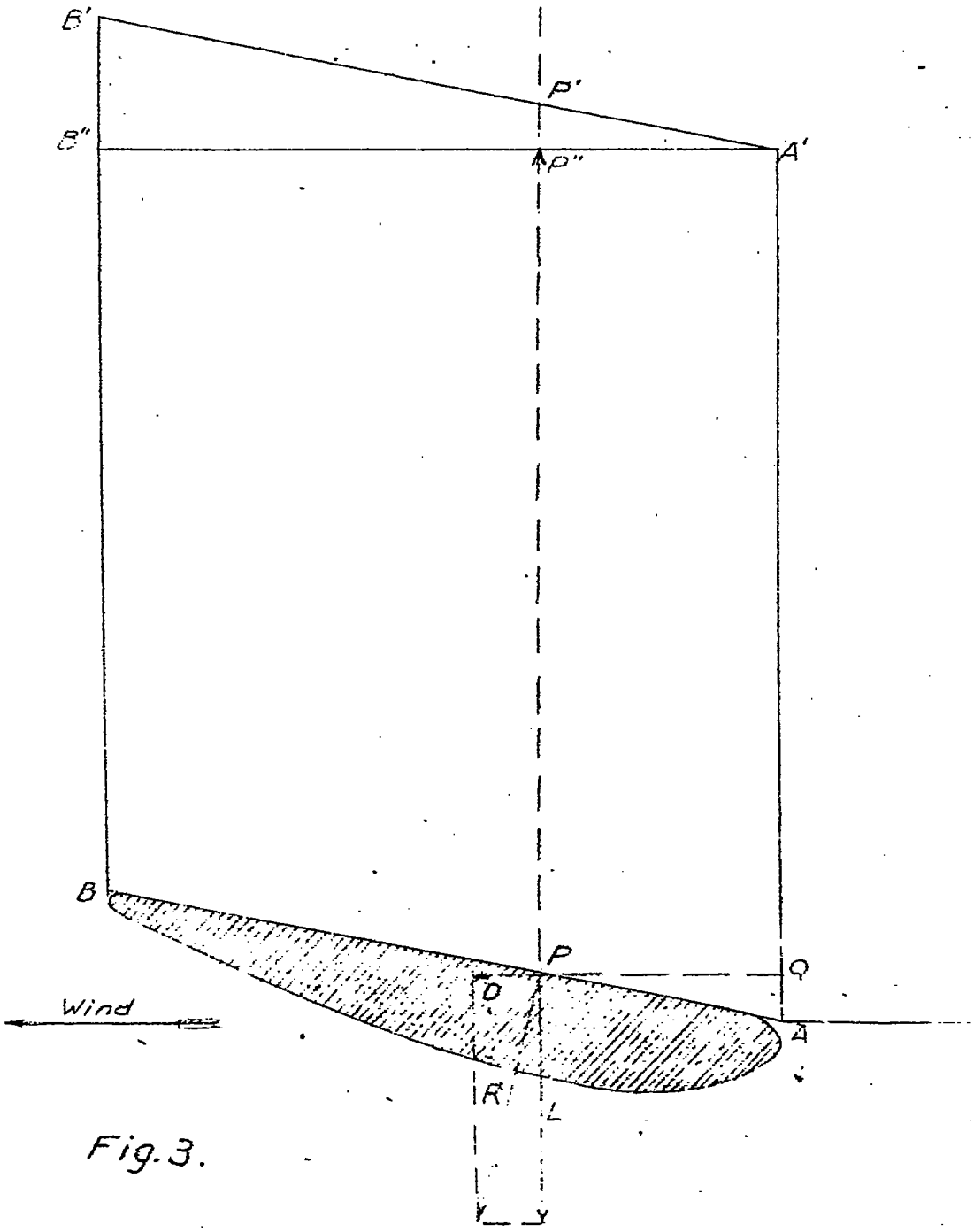

Fig. 3.

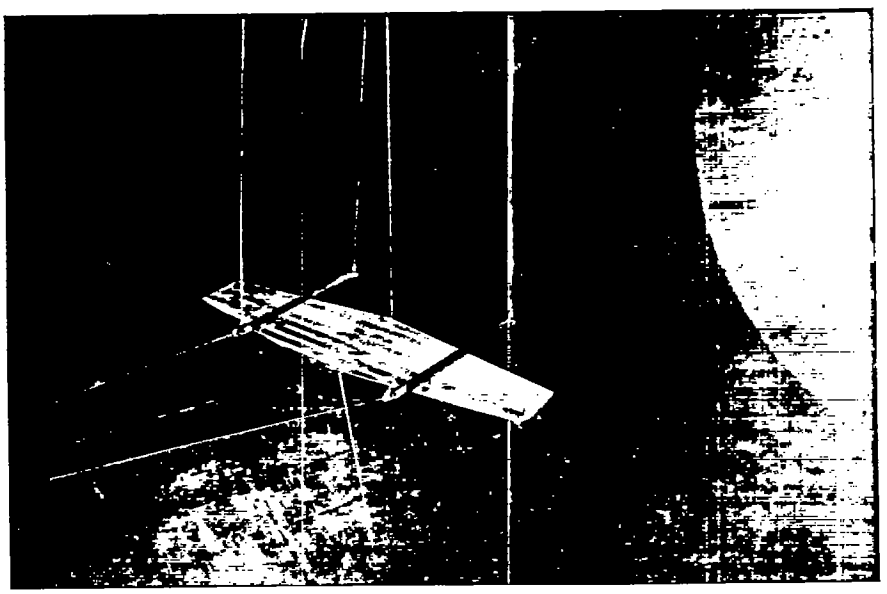
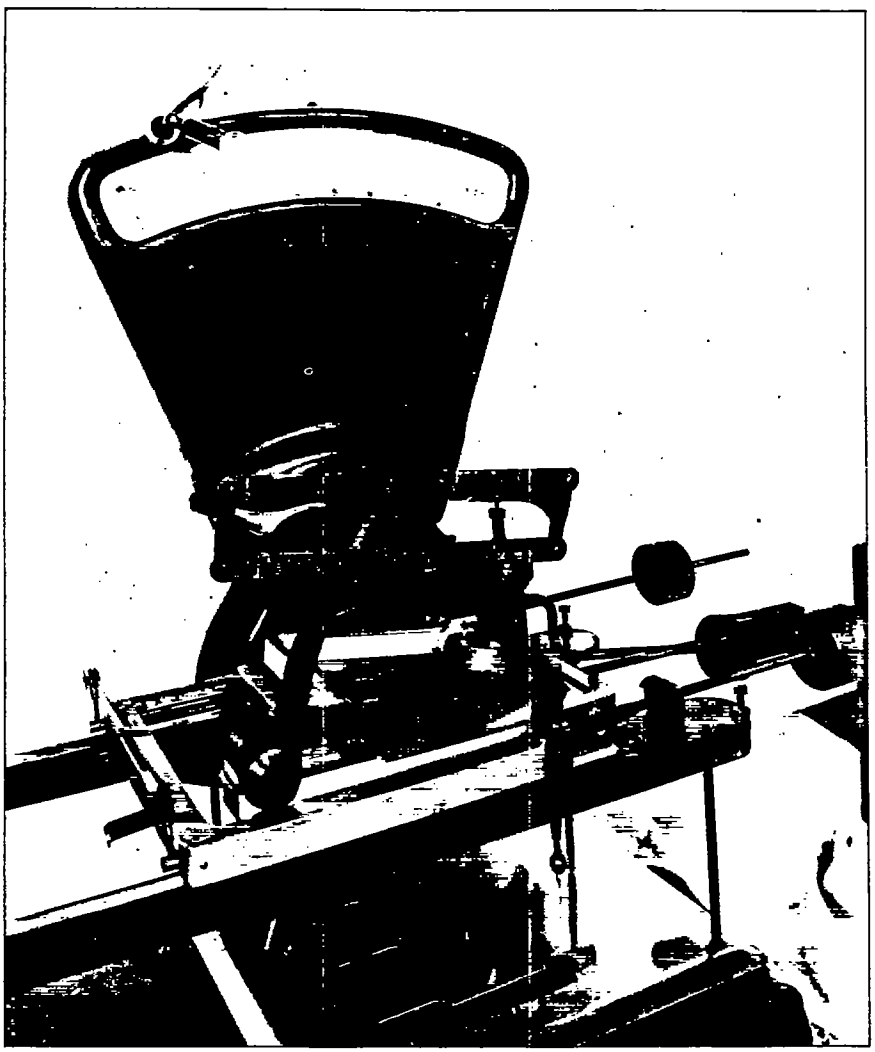
Fig. 4.